Send Quote Requests to info@automatedpt.com
Call +1(800)985-6929 To Order or Order Online At Nordgearmotors.com

# CONSTANT SPEED DRIVES



## SAFE • RELIABLE • EFFICIENT

UNICASE™

NORD® DRIVESYSTEMS

Send Quote Requests to info@automatedpt.com
Call +1(800)985-6929 To Order or Order Online At Nordgearmotors.com

# DEPENDABLE & ACCESSIBLE

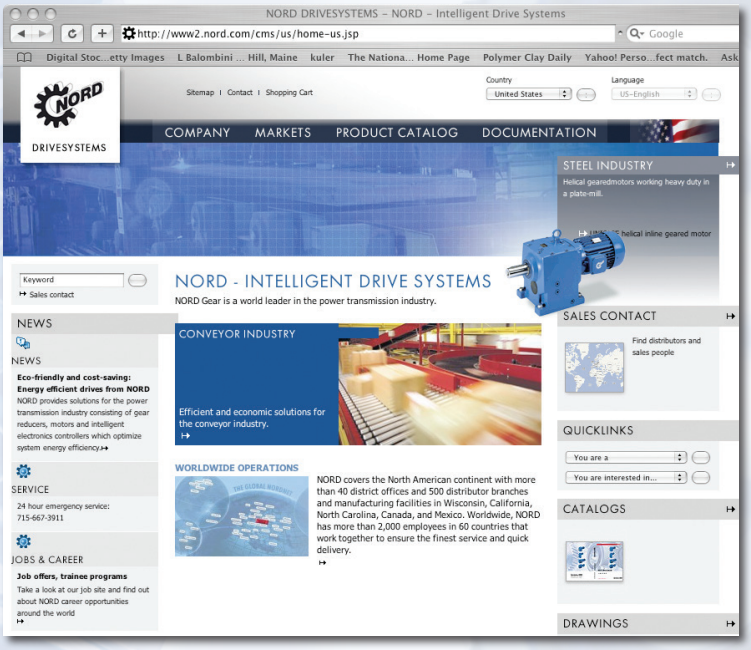


## Online Tools

NORD offers comprehensive, searchable product information online. The Internet makes it possible for our customers to reach us anytime, anywhere — 365 days a year, 24 hours a day.

- Online order tracking
- Parts list and maintenance schedules
- Online drive selection software
- DXF scale drawing

## Quality

Quality is assured at NORD assembly and manufacturing facilities, based on ISO 9000 standards — from careful inspection of incoming materials to closely monitored machining operations including gear cutting, turning, hardening and grinding as well as finishing and assembly.

## Global Availability

From Shanghai to Charlotte, and all points between, NORD reaches customers around the world. Deliveries, service, and product support are close at hand, regardless of your location.

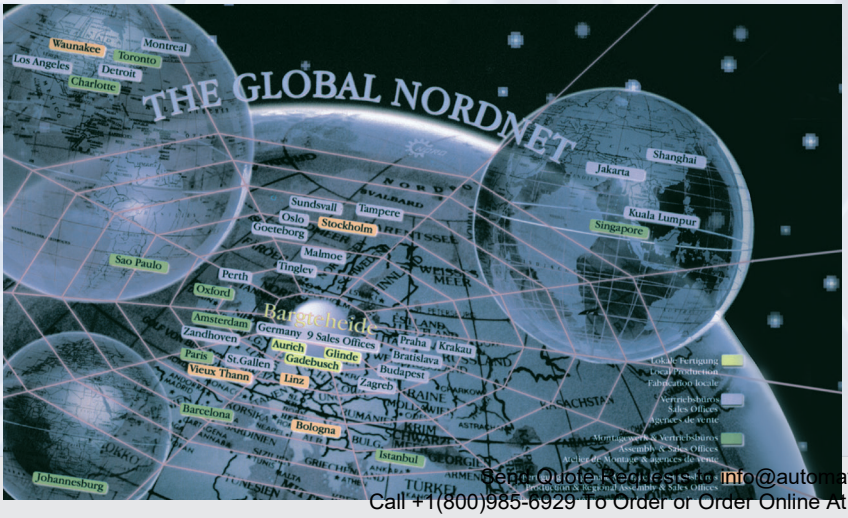


## NORD 911

Trouble? Just call **715-NORD-911** (in Canada, 905-796-3606). Emergency service is available 24 hours a day, 7 days a week. We'll answer your call, ship the parts, or build a unit and have it shipped directly to you to provide what you need, when you need it.

Send Quote Requests to info@automatedpt.com Call +1(800)985-6929 To Order or Order Online At Nordgearmotors.com

# Table of Contents


| | | | |
|---|---|---|---|
|  | A | Introduction | 4 |
|  | B | Helical In-line | 85 |
|  | C | Clincher™ Shaft Mount | 241 |
|  | D | Right-angle Helical-bevel | 395 |
|  | E | Right-angle Helical-worm | 575 |
| 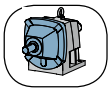 | F | Inputs | 674 |
|  | G | Motors | 689 |
|  | H | Service | 749 |
|  | I | Products & Key Features | 787 |
|  | J | Contacts | 801 |


DRIVESYSTEMS

www.nord.com



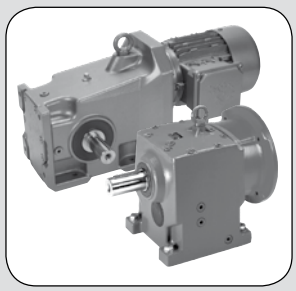



Send Quote Requests to info@automatedpt.com
Call +1(800)985-6929 To Order or Order Online At Nordgearmotors.com

Send Quote Requests to info@automatedpt.com Call +1(800)985-6929 To Order or Order Online At Nordgearmotors.com



# Table of Contents

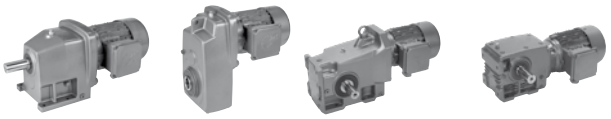


**A Introduction ..... 4**
Company Information ..... **4**
Ordering Guides ..... 6
Helical In-line ..... 6
Clincher™ ..... 7
Helical-bevel ..... 8
Helical-worm ..... 9
Motors & Brakemotors ..... 10
Selection ..... 11
General Warnings & Cautions ..... 13
Thermal Considerations ..... 14
Inquiry Form ..... 15
Mounting Positions ..... 16
Options ..... 19
Lubrication ..... 36
Lubrication Types ..... 42
Oil Fill Quantities ..... 44
Overhung Load & Thrust Load ..... 52
Tolerances ..... 60
Service Factoring ..... 62
Shrink Discs ..... 72
Weights ..... 76
**B Helical In-line ..... 85**
In-line Helical Gearmotor Selection ..... 85
In-line Helical Reducer Selections & Combinations ..... 88
In-line Helical Dimensions ..... 151
In-line Helical Alternate Shaft Options ..... 239
**C Clincher™ Shaft Mount ..... 241**
Clincher™ Shaft Mount Gearmotor Selection ..... 244
Clincher™ Shaft Mount Reducer Selections & Combinations ..... 289
Clincher™ Shaft Mount Dimensions ..... 311
Clincher™ Shaft Mount Alternate Shaft Options ..... 388
**D Right-angle Helical-bevel ..... 395**
Right-angle Helical-bevel Gearmotor Selection ..... 398
Right-angle Helical-bevel Reducer Selections & Combinations ..... 447
Right-angle Helical-bevel Dimensions ..... 463
Right-angle Helical-bevel Alternate Shaft Options ..... 566



Send Quote Requests to info@automatedpt.com
Call +1(800)985-6929 To Order or Order Online At Nordgearmotors.com

Send Quote Requests to info@automatedpt.com Call +1(800)985-6929 To Order or Order Online At Nordgearmotors.com





# Table of Contents




**E Right-angle Helical-worm ..... 575**
- Right-angle Helical-worm Gearmotor Selection ..... 578
- Right-angle Helical-worm Reducer Selections & Combinations ..... 597
- Right-angle Helical-worm Dimensions ..... 621
- Right-angle Helical-worm Alternate Shaft Options ..... 669

**F Inputs ..... 673**
- Solid Input Shaft ..... 675
- NEMA C-Face ..... 676
- IEC Metric Motor Adapters ..... 676
- Square Flange Servo Motor Adapters ..... 678
- Top Mount Motor Platform ..... 679
- Scoop Motor Platform ..... 682
- Solid Input Shafts with Input Flange ..... 684

**G Motors ..... 689**
- Order Form ..... 10
- C-Face Motors ..... 691
- Standard Design ..... 692
- Options ..... 697
- Motor Mounted Inverter Trio SK300E ..... 705
- Performance Data ..... 712
- Connection Diagrams ..... 719
- Dimensions ..... 720

**Brakes ..... 727**
- Torque Selection ..... 730
- Rectifiers ..... 732
- Brake Times & Electrical Selection ..... 734
- Options ..... 737
- Performance Data ..... 741
- Connection Diagrams ..... 743

**H Service ..... 749**
- Oil Plug Locations ..... 750
- Parts Lists ..... 756

**I Products & Key Features ..... 787**

**J Contacts ..... 801**
- Terms & Conditions of Sale ..... 812




Send Quote Requests to info@automatedpt.com
Call +1(800)985-6929 To Order or Order Online At Nordgearmotors.com

# NORD Gear



## Company Overview

Since 1965, NORD Gear has grown to global proportions on the strength of product performance, superior customer service, and intelligent solutions to a never ending variety of industrial challenges.

All mechanical and electrical components of a drive are available from NORD Gear. Our products cover the full range of drive equipment: helical in-line, Clincher™ shaft-mount, helical-bevel, helical-worm gearboxes, motors and AC drives from 1/6 hp to 250 hp, with torques from 90 lb-in to 900,000 lb-in.

But NORD Gear does far more than manufacture the world's finest drive components. We provide our customers with optimum drive configurations for their specific purposes, providing each and every one of them with truly complete and efficient systems at a price/quality ratio unmatched in today's fast-changing markets.

NORD Gear makes its wide range of products easily available through a global network that provides all customers with prompt delivery and expert support services to consistently exceed customer expectations. We are firmly committed to being totally responsive to the ideas and specifications of every customer, anywhere in the world.

## UNICASE™

NORD heavy-duty, one-piece housings are precisely machined to exacting standards. Internal reinforcements further increase strength and rigidity. All bearings and seal seats are contained within the casting, eliminating splits or bolt-on carriers that can weaken the housing and allow oil leakage. Bores and mounting faces are machined in one step, producing extremely precise tolerances — thus ensuring accurate positioning of gear teeth, bearings and seals, and longer life for all components.

### Benefits

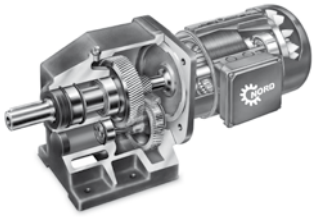

- Leak-free design
- Quiet operation
- High output torque capabilities
- Extended lubrication life
- Longer gear and bearing life
- Superior dependability/low maintenance/longer life

## High-Performance Motors & Brakemotors

NORD motors are designed to run cool for longer service life. Low rotor inertia and high starting torque allow peak performance in the most difficult applications for inverter and vector duty per NEMA MG 1-1998 Section 31.4.4.2 voltage spikes. Our motors are internationally accepted, conforming to North American NEMA MG 1 and international IEC electrical specifications. High performance options include brakes, encoders, and forced cooling fans.

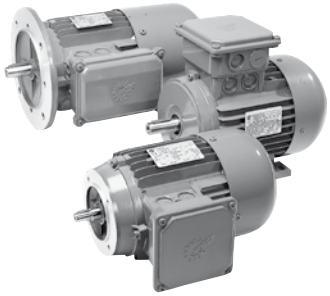

## Short, On-Time Delivery

As a NORD customer, you can rest assured that your order will be delivered on time. Because NORD has both decentralized assembly and manufacturing operations and a linked global network, we offer our customers:

- Fast, reliable responses
- Greater product versatility
- Shorter lead times
- Timely shipping
- Rapid delivery

## Quality

Quality is assured at NORD assembly and manufacturing facilities, based on ISO 9000 standards — from careful inspection of incoming materials to closely monitored machining operations including gear cutting, turning, hardening & grinding as well as finishing & assembly.


Send Quote Requests to info@automatedpt.com
Call +1(800)985-6929 To Order or Order Online At Nordgearmotors.com

Send Quote Requests to info@automatedpt.com
Call +1(800)985-6929 To Order or Order Online At Nordgearmotors.com



## NORD 911

Trouble? Just call 715-NORD-911 (in Canada, 905-796-3606). Emergency service is available 24 hours a day, 7 days a week. We'll answer your call, ship the parts, or build a unit and have it shipped directly to you to provide what you need, when you need it.

## Manufacturing

NORD continually invests in research, manufacturing and automation technology. This is to ensure the highest possible quality at affordable prices. NORD invests heavily in our North American facilities as well as our factories around the world. Recent examples include expanding our Waunakee factory and adding numerous new large gear unit assembly cells. In our Glinde, Germany gear factory we added a state-of-the-art Vacuum multi-chamber carburization system.




## Global Availability

From Shanghai to Charlotte, and all points between, NORD reaches customers around the world. Deliveries, service, and product support are close at hand, regardless of your location.

## Worldwide Standards

NORD products are designed and manufactured based on the latest North American and global standards.

## Increased North American Presence

NORD covers North America with over 30 district offices and over 500 distributor branches. NORD operates a manufacturing and assembly facility in Waunakee, WI, Charlotte, NC, Corona, CA, Brampton, ON, and Monterrey, Mexico, resulting in an ever-increasing capacity in the United States and Canada and giving our customers the shortest lead times in the industry.

## Energy Efficiency

Lowering your operating costs is one of our greatest goals! NORD research and development focuses on energy efficiency, with gearboxes, motors, and frequency inverters designed for lower energy consumption. Our fully diverse line of in-line or right-angle units and motors has been developed to suit your needs.

## Modular Design

NORD's modular design philosophy provides you with a competitive edge by allowing you to configure drive systems to exactly fit your applications.

More than 20,000,000 combinations of totally unique gearmotors and speed reducers are possible – assembled in-line or right-angle, mounted by foot or flange, featuring solid or hollow shafts with either metric or inch shaft extensions – to give you complete freedom to specify a drive solution that's perfect for you.

### Benefits

- More output speeds
- More mounting arrangements / Greater flexibility
- Fewer gear stages/Lower cost
- Metric and inch products

NORD engineers stand ready to assist you with your custom applications. Most standard drives can be modified to your purposes, and custom designs can be developed for special applications.


Send Quote Requests to info@automatedpt.com
Call +1(800)985-6929 To Order or Order Online At Nordgearmotors.com

INTRODUCTION

# Helical In-line Ordering Guide

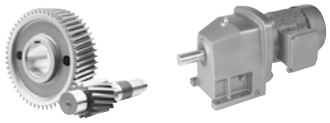

DRIVESYSTEMS

| | Gear Unit | Shaft/Mounting | Reducer Options | | Input/Motor | Motor Options |
|---|---|---|---|---|---|---|
| **SK** | ❶ | ❷ | ❸ | - | ❹ | |
| | | | | | see page 690 | see page 690 |

❶

| Gear Unit | | | | | |
|---|---|---|---|---|---|
| 11E | 02 | 03 | 12/02 | 63/22 | 63/23 |
| 21E | 12 | 13 | 22/02 | 73/22 | 73/23 |
| 31E | 22 | 23 | 32/12 | 73/32 | 83/33N |
| 41E | 32 | 33N | 42/12 | 83/32 | 93/43 |
| 51E | 42 | 43 | 52/12 | 83/42 | 103/53 |
| | 52 | 53 | | 93/42 | |
| | 62 | 63 | | 93/52 | |
| | 72 | 73 | | 103/52 | |
| | 82 | 83 | | | |
| | 92 | 93 | | | |
| | 102 | 103 | | | |

❷

| Shaft/Mounting | |
|---|---|
| **Blank -** Footed | **XZ -** Foot/B14 Flange |
| **F -** B5 Flange | **XF -** Foot/B5 Flange |

❸

| Reducer Options | |
|---|---|
| ❒ **VL -** Heavy Duty Output Bearings | ❒ **OSG -** Oil Sight Glass |
| ❒ **PR -** Flange Pilot Removal | ❒ **OA -** Oil Expansion Chamber |
| ❒ **VI -** Fluoro Rubber Seals | ❒ **OC -** Oil Cooler |
| ❒ **SWV -** Special Solid Shaft | ❒ **LL -** Long Term Storage |
| ❒ **SM5 -** Stainless Steel Output Shaft | ❒ **MDP -** Magnetic Drain Plug |
| ❒ Cross Drilled Shaft | ❒ **ADP -** Additional Drain Plug |

❹

| Input Shaft | NEMA Adapter | IEC | Integral Motors | | Integral Energy Efficent Motors | | Scoop | Motor Platform | Servo Adapter (Keyed) |
|---|---|---|---|---|---|---|---|---|---|
| W | N56C | IEC 63 | **63S/4** - 0.16hp | **160L/4** - 20hp | **80LH/4** - 1hp | **200LH/4** - 40hp | S56 | MKN056 | SEP 100 |
| | N140TC | IEC 71 | **63L/4** - 0.25hp | **180MX/4** - 25hp | **90SH/4** - 1.5hp | **225SH/4** - 50hp | S140T | MKN140 | SEP 130 |
| | N180TC | IEC 80 | **71S/4** - 0.33hp | **180LX/4** - 30hp | **90LH/4** - 2hp | **225MH/4** - 60hp | S180T | MKN180 | SEP 165 |
| | N210TC | IEC 90 | **71L/4** - 0.50hp | **200L/4** - 40hp | **100LH/4** - 3hp | **250MH/4** - 75hp | S210T | MKN210 | SEP 215 |
| | N250TC | IEC 100 | **80S/4** - 0.75hp | **225S/4** - 50hp | **112MH/4** - 5hp | **280SH/4** - 100hp | S250T | MKN250 | SEP 300 |
| | N280TC | IEC 112 | **80L/4** - 1hp | **225M/4** - 60hp | **132SH/4** - 7.5hp | **280MH/4** - 125hp | S280T | MKN280 | **Servo Adapter (Clamp)** |
| | N320TC | IEC 132 | **90S/4** - 1.5hp | **250M/4** - 75hp | **132MH/4** - 10hp | **315SH/4** - 150hp | S320T | MKN320 | SEK 100 |
| | N360TC | IEC 160 | **90L/4** - 2hp | **280S/4** - 100hp | **160MH/4** - 15hp | **315MH/4** - 175hp | S360T | MKN360 | SEK 130 |
| | N400TC | IEC 180 | **100L/4** - 3hp | **280M/4** - 125hp | **160LH/4** - 20hp | **315MAH/4** - 200hp | S400T | MKN400 | SEK 165 |
| | | IEC 200 | **100LA/4** - 5hp | **315S/4** - 150hp | **180MH/4** - 25hp | **315LH/4** - 250hp | | | SEK 215 |
| | | IEC 225 | **112M/4** - 5.4hp | **315M/4** - 175hp | **180LH/4** - 30hp | | | | SEK 300 |
| | | IEC 250 | **132S/4** - 7.5hp | **315MA/4** - 200hp | | | | | |
| | | IEC 280 | **132M/4** - 10hp | **315L/4** - 250hp | | | | | |
| | | IEC 315 | **160M/4** - 15hp | Other Speeds Available | | Other Speeds Available | | | |

## Product Specifications

**Ratio**

_____ :1

see pages 88 - 125

— **OR**—

**Output Speed**

_____ rpm

see pages 88 - 125

**Mounting Position**

- ❍ M1
- ❍ M2
- ❍ M3
- ❍ M4
- ❍ M5
- ❍ M6
- ❍ Special _____

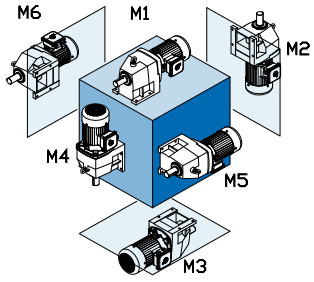


**Paint**

- ❍ Standard Stainles Steel Paint
- ❍ NSD+ (gray)
- ❍ NSD+W (white)
- ❍ NSD-X3 (gray)
- ❍ NSD-X3W (white)
- ❍ Casting Primed
- ❍ Special _____

**Lubricant**

- ❍ Standard
- ❍ Synthetic
- ❍ Food Grade
- ❍ Other _____

**B5 Flange Diameter** (If required)

_____

## Gearmotor Only Details

**Voltage & Frequency**

- ❍ 230/460V-60Hz (460V only ≥ 40 hp)
- ❍ 575V-60Hz
- ❍ 208V-60Hz
- ❍ 400V-50Hz
- ❍ 115/230V-60Hz, 1 ph.
- ❍ Other _____

**Terminal Box Pos.**

- ❍ TB1
- ❍ TB2
- ❍ TB3
- ❍ TB4

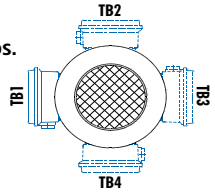


Mtg. Pos. M1 Shown

**Conduit Entry Loc.**

- ❍ CE I *
- ❍ CE II
- ❍ CE III *
- ❍ CE IV

* Brakemotor

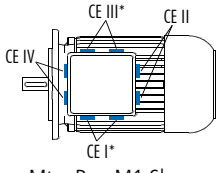


Mtg. Pos. M1 Shown


Send Quote Requests to info@automatedpt.com
Call +1(800)985-6929 To Order or Order Online At Nordgearmotors.com

NORD DRIVESYSTEMS





# Clincher™ Ordering Guide



| | Gear Unit | Shaft/Mounting | Reducer Options | | Motor/Input | Motor Options |
|---|---|---|---|---|---|---|
| **SK** | ❶ | ❷ | ❸ | – | ❹ | |
| | | | | | see page 690 | see page 690 |

❶

| Gear Unit | | | |
|---|---|---|---|
| 0182NB | 1382NB | 1282/02 | 6382/22 |
| 0282NB | 2382 | 2282/02 | 6382/32 |
| 1282 | 3382 | 3282/12 | 7382/22 |
| 2282 | 4382 | 4282/12 | 7382/32 |
| 3282 | 5382 | 5282/12 | 8382/22 |
| 4282 | 6382 | | 8382/32 |
| 5282 | 7382 | | 9382/42 |
| 6282 | 8382 | | 9382/52 |
| 7282 | 9382 | | 10382/52 |
| 8282 | 10382 | | 11382/52 |
| 9282 | 11382 | | |
| 10282 | 12382 | | |
| 11282 | | | |

❷

| Shaft/Mounting | | |
|---|---|---|
| **VZ -** Solid Shaft/B14 Flange | **VX -** Solid Shaft/Foot | **AZ** - Hollow Shaft/B14 Flange |
| **VF -** Solid Shaft/B5 Flange | **LX -** Double Solid Shaft/Foot | **AF** - Hollow Shaft/B5 Flange |
| **SCP -** Screw Conveyor Package | | **AX** - Hollow Shaft/Foot |

❸

| Reducer Options | | |
|---|---|---|
| ❒ **B -** Fixing Element Kit | ❒ **VL -** Heavy Duty Output Bearings | ❒ **VI -** Fluoro-rubber Seals |
| ❒ **G -** Rubber Buffers | ❒ **VL2 -** Spread Bearing Design | ❒ **OSG -** Oil Sight Glass |
| ❒ **VG -** Heavy Duty Rubber Buffers | ❒ **VL3 -** Oil Safe Spread Bearing Design | ❒ **OA -** Oil Expansion Chamber |
| ❒ **H -** Hollow Shaft Cover | ❒ **VL4-** Drywell Drop Bearing Design | ❒ **OC -** Oil Cooler |
| ❒ **H66 -** IP66 Hollow Shaft Cover | ❒ **LX-** Double Solid Shaft | ❒ **WC -** Water Cooling Cover |
| ❒ **SH -** Shrink Disc & Cover | ❒ **SM5 -** Stainless Steel Output Shaft | ❒ **OT -** Oil Reservoir Tank |
| ❒ **VSH -** Heavy Duty Shrink Disc & Cover | ❒ **SWA -** Special Hollow Shaft | ❒ **MDP -** Magnetic Drain Plug |
| ❒ **PR -** Flange Pilot Removal | ❒ **SWV -** Special Solid Shaft | ❒ **ADP -** Additional Drain Plug |
| ❒ **LL -** Long Term Storage | ❒ Cross Drilled Shaft | |

❹

| Input Shaft | NEMA Adapter | IEC | Integral Motors | | Integral Energy Efficent Motors | | Scoop | Motor Platform | Servo Adapter (Keyed) |
|---|---|---|---|---|---|---|---|---|---|
| W | N56C | IEC 63 | **63S/4** - 0.16hp | **160L/4** - 20hp | **80LH/4** - 1hp | **200LH/4** - 40hp | S56 | MKN056 | SEP 100 |
| | N140TC | IEC 71 | **63L/4** - 0.25hp | **180MX/4** - 25hp | **90SH/4** - 1.5hp | **225SH/4** - 50hp | S140T | MKN140 | SEP 130 |
| | N180TC | IEC 80 | **71S/4** - 0.33hp | **180LX/4** - 30hp | **90LH/4** - 2hp | **225MH/4** - 60hp | S180T | MKN180 | SEP 165 |
| | N210TC | IEC 90 | **71L/4** - 0.50hp | **200L/4** - 40hp | **100LH/4** - 3hp | **250MH/4** - 75hp | S210T | MKN210 | SEP 215 |
| | N250TC | IEC 100 | **80S/4** - 0.75hp | **225S/4** - 50hp | **112MH/4** - 5hp | **280SH/4** - 100hp | S250T | MKN250 | SEP 300 |
| | N280TC | IEC 112 | **80L/4** - 1hp | **225M/4** - 60hp | **132SH/4** - 7.5hp | **280MH/4** - 125hp | S280T | MKN280 | Servo Adapter (Clamp) |
| | N320TC | IEC 132 | **90S/4** - 1.5hp | **250M/4** - 75hp | **132MH/4** - 10hp | **315SH/4** - 150hp | S320T | MKN320 | |
| | N360TC | IEC 160 | **90L/4** - 2hp | **280S/4** - 100hp | **160MH/4** - 15hp | **315MH/4** - 175hp | S360T | MKN360 | SEK 100 |
| | N400TC | IEC 180 | **100L/4** - 3hp | **280M/4** - 125hp | **160LH/4** - 20hp | **315MAH/4** - 200hp | S400T | MKN400 | SEK 130 |
| | | IEC 200 | **100LA/4** - 5hp | **315S/4** - 150hp | **180MH/4** - 25hp | **315LH/4** - 250hp | | | SEK 165 |
| | | IEC 225 | **112M/4** - 5.4hp | **315M/4** - 175hp | **180LH/4** - 30hp | | | | SEK 215 |
| | | IEC 250 | **132S/4** - 7.5hp | **315MA/4** - 200hp | | | | | SEK 300 |
| | | IEC 280 | **132M/4** - 10hp | **315L/4** - 250hp | | | | | |
| | | IEC 315 | **160M/4** - 15hp | Other Speeds Available | | Other Speeds Available | | | |

## Product Specifications

**Ratio**

_____ :1

see pages 244 - 288

— OR —

**Output Speed**

_____ rpm

see pages 244 - 288

**Mounting Position**

- ❍ M1
- ❍ M2
- ❍ M3
- ❍ M4
- ❍ M5
- ❍ M6
- ❍ Special _____

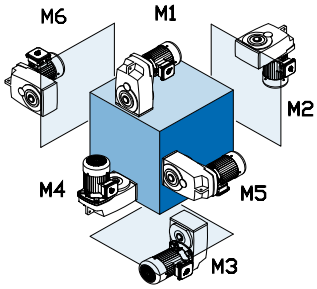


**Paint**

- ❍ Standard Stainles Steel Paint
- ❍ NSD+ (gray)
- ❍ NSD+W (white)
- ❍ NSD-X3 (gray)
- ❍ NSD-X3W (white)
- ❍ Casting Primed
- ❍ Special _____

**Lubricant**

- ❍ Standard
- ❍ Synthetic
- ❍ Food Grade
- ❍ Other _____

**Hollow Shaft Diameter** (If required)

see pages 388 - 393

**B5 Flange Diameter** (If required)

**SCP Drive Shaft Diameter** (If required)

see page 29

## Gearmotor Only Details

**Voltage & Frequency**

- ❍ 230/460V-60Hz (460V only ≥ 40 hp)
- ❍ 575V-60Hz
- ❍ 208V-60Hz
- ❍ 400V-50Hz
- ❍ 115/230V-60Hz, 1 ph.
- ❍ Other _____

**Terminal Box Pos.**

- ❍ TB1
- ❍ TB2
- ❍ TB3
- ❍ TB4

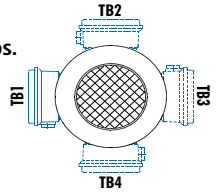


Mtg. Pos. M1 Shown

**Conduit Entry Loc.**

- ❍ CE I *
- ❍ CE II
- ❍ CE III *
- ❍ CE IV

* Brakemotor

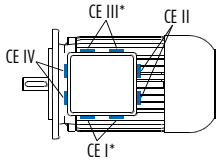


Mtg. Pos. M1 Shown



Send Quote Requests to info@automatedpt.com
Call +1(800)985-6929 To Order or Order Online At Nordgearmotors.com

# Helical-Bevel Ordering Guide

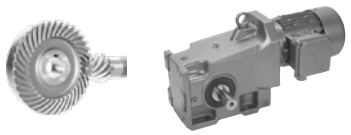

DRIVESYSTEMS

| | Gear Unit | Shaft/Mounting | Reducer Options | | Motor/Input | Motor Options |
|---|---|---|---|---|---|---|
| SK | ❶ | ❷ | ❸ | - | ❹ | |
| | | | | | see page 690 | see page 690 |

❶

| Gear Unit | | | |
|---|---|---|---|
| 92072 | 9012.1 | 9013.1 | 9072.1/32 |
| 92172 | 9016.1 | 9017.1 | 9072.1/42 |
| 92372 | 9022.1 | 9023.1 | 9082.1/42 |
| 92672 | 9032.1 | 9033.1 | 9082.1/52 |
| 92772 | 9042.1 | 9043.1 | 9086.1/52 |
| | 9052.1 | 9053.1 | 9092.1/52 |
| | 9072.1 | | 9096.1/62 |
| | 9082.1 | | |
| | 9086.1 | | |
| | 9092.1 | | |
| | 9096.1 | | |

❷

| Shaft/Mounting | | |
|---|---|---|
| - Solid Shaft/Foot Mount | **VXZ -** Solid Shaft/Foot/B14 Flange | **AZ** - Hollow Shaft/B14 Flange |
| **VZ -** Solid Shaft/B14 Flange | **VXF -** Solid Shaft/Foot/B5 Flange | **AF** - Hollow Shaft/B5 Flange |
| **VF -** Solid Shaft/B5 Flange | **LXZ -** Double Solid Shaft/Foot/ B14 Flange | **AX** - Hollow Shaft/Foot Mount |
| **LX -** Double Solid Shaft/Foot | | **AXZ -** Hollow Shaft/Footed/B14 Flange |
| | | **AXF -** Hollow Shaft/Footed/B5 Flange |

❸

| Reducer Options | | |
|---|---|---|
| ❒ **B -** Fixing Element Kit | ❒ **VL -** Heavy Duty Output Bearings | ❒ **VI -** Flouro-rubber Seals |
| ❒ **H -** Hollow Shaft Cover | ❒ **VL2 -** Spread Bearing Design | ❒ **OSG -** Oil Sight Glass |
| ❒ **H66 -** IP66 Hollow Shaft Cover | ❒ **VL3 -** Oil Safe Spread Bearings | ❒ **OA -** Oil Expansion Chamber |
| ❒ **D -** Torque Arm | ❒ **VL4 -** Drywell | ❒ **OC -** Oil Cooler |
| ❒ **K -** Bottom Mount Torque Arm | ❒ **SM5 -** Stainless Steel Shaft | ❒ **WC -** Water Cooling Cover |
| ❒ **PR -** Flange Pilot Removal | ❒ **SWA -** Special Hollow Shaft | ❒ **LL -** Long Term Storage |
| ❒ **SH -** Shrink Disc & Cover | ❒ **SWV -** Special Solid Shaft | ❒ **MDP -** Magnetic Drain Plug |
| ❒ **VSH -** Heavy Duty Shrink Disc & Cover | ❒ **R -** Backstop | ❒ **ADP -** Additional Drain Plug |

❹

| Input Shaft | NEMA Adapter | IEC Adapter | Integral Motors | | Integral Energy Efficent Motors | | Scoop | Motor Platform | Servo Adapter (Keyed) |
|---|---|---|---|---|---|---|---|---|---|
| W | N56C | IEC 63 | **63S/4** - 0.16hp | **160L/4** - 20hp | **80LH/4** - 1hp | **200LH/4** - 40hp | S56 | MKN056 | SEP 100 |
| | N140TC | IEC 71 | **63L/4** - 0.25hp | **180MX/4** - 25hp | **90SH/4** - 1.5hp | **225SH/4** - 50hp | S140T | MKN140 | SEP 130 |
| | N180TC | IEC 80 | **71S/4** - 0.33hp | **180LX/4** - 30hp | **90LH/4** - 2hp | **2525MH/4** - 60hp | S180T | MKN180 | SEP 165 |
| | N210TC | IEC 90 | **71L/4** - 0.50hp | **200L/4** - 40hp | **100LH/4** - 3hp | **250MH/4** - 75hp | S210T | MKN210 | SEP 215 |
| | N250TC | IEC 100 | **80S/4** - 0.75hp | **225S/4** - 50hp | **112MH/4** - 5hp | **280SH/4** - 100hp | S250T | MKN250 | SEP 300 |
| | N280TC | IEC 112 | **80L/4** - 1hp | **2525M/4** - 60hp | **132SH/4** - 7.5hp | **280MH/4** - 125hp | S280T | MKN280 | Servo Adapter (Clamp) |
| | N320TC | IEC 132 | **90S/4** - 1.5hp | **250M/4** - 75hp | **132MH/4** - 10hp | **315SH/4** - 150hp | S320T | MKN320 | |
| | N360TC | IEC 160 | **90L/4** - 2hp | **280S/4** - 100hp | **160MH/4** - 15hp | **315MH/4** - 175hp | S360T | MKN360 | SEK 100 |
| | N400TC | IEC 180 | **100L/4** - 3hp | **280M/4** - 125hp | **160LH/4** - 20hp | **315MAH/4** - 200hp | S400T | MKN400 | SEK 130 |
| | | IEC 200 | **100LA/4** - 5hp | **315S/4** - 150hp | **180MH/4** - 25hp | **315LH/4** - 250hp | | | SEK 165 |
| | | IEC 225 | **112M/4** - 5.4hp | **315M/4** - 175hp | **180LH/4** - 30hp | | | | SEK 215 |
| | | IEC 250 | **132S/4** - 7.5hp | **315MA/4** - 200hp | | | | | SEK 300 |
| | | IEC 280 | **132M/4** - 10hp | **315L/4** - 250hp | | | | | |
| | | IEC 315 | **160M/4** - 15hp | Other Speeds Available | | Other Speeds Available | | | |

## Product Specifications

**Ratio**

_____ :1

see pages 398 - 446

**OR**

**Output Speed**

_____ rpm

see pages 398 - 446

**Mounting Position**

- ❍ M1
- ❍ M2
- ❍ M3
- ❍ M4
- ❍ M5
- ❍ M6
- ❍ Special _____

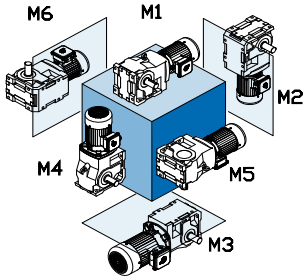


**Paint**

- ❍ Standard Stainles Steel Paint
- ❍ NSD+ (gray)
- ❍ NSD+W (white)
- ❍ NSD-X3 (gray)
- ❍ NSD-X3W (white)
- ❍ Casting Primed
- ❍ Special _____

**Lubricant**

- ❍ Standard
- ❍ Synthetic
- ❍ Food Grade
- ❍ Other _____

**Solid Shaft Side** (if required)

- ❍ Shaft Side A
- ❍ Shaft Side B
- ❍ Shaft Side A&B

see page 18

**Hollow Shaft Diameter** (if required)

_____

see pages 566 - 573

**B5 Flange Side** (if required)

- ❍ Flange Side A
- ❍ Flange Side B
- ❍ Flange Side A&B

see page 18

**B5 Flange Diameter** (if required)

_____

**Torque Arm Side & Location** (if required)

- ❍ Side A
- ❍ Side B

_____ Location

see page 18

**Shrink Disc Side** (if required)

- ❍ Side A
- ❍ Side B

see page 18

**H66 Side** (if required)

- ❍ H66 Side A
- ❍ H66 Side B

see page 18

## Gearmotor Only Details

**Voltage & Frequency**

- ❍ 230/460V-60Hz (460V only ≥ 40 hp)
- ❍ 575V-60Hz
- ❍ 208V-60Hz
- ❍ 400V-50Hz
- ❍ 115/230V-60Hz, 1 ph.
- ❍ Other _____

**Terminal Box Pos.**

- ❍ TB1
- ❍ TB2
- ❍ TB3
- ❍ TB4

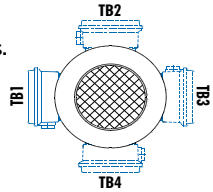


Mtg. Pos. M1 Shown

**Conduit Entry Loc.**

- ❍ CE I *
- ❍ CE II
- ❍ CE III *
- ❍ CE IV

* Brakemotor

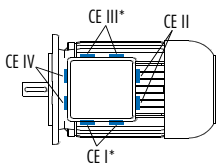


Mtg. Pos. M1 Shown



Send Quote Requests to info@automatedpt.com
Call +1(800)985-6929 To Order or Order Online At Nordgearmotors.com

NORD DRIVESYSTEMS

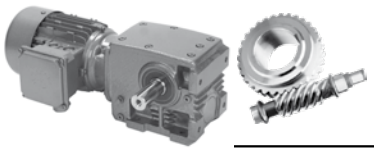

# Helical-Worm Ordering Guide

| | Gear Unit | Shaft/Mounting | Reducer Options | | Motor/Input | Motor Options |
|---|---|---|---|---|---|---|
| **SK** | ❶ | ❷ | ❸ | - | ❹ | |
| | | | | | see page 690 | see page 690 |

❶

| Gear Unit | |
|---|---|
| 02040 | 13050 |
| 02050 | 13063 |
| 12063 | 13080 |
| 12080 | 33100 |
| 32100 | 43125 |
| 42125 | |

❷

| Shaft/Mounting | |
|---|---|
| - Solid Shaft/Foot Mount | **AZ** - Hollow Shaft/B14 Flange |
| **VF** - Solid Shaft/B5 Flange | **AF** - Hollow Shaft/B5 Flange |
| **LX** - Double Solid Shaft/Foot | |

❸

| Reducer Options | | |
|---|---|---|
| ❒ **B** - Fixing Element Kit | ❒ **SH** - Shrink Disc & Cover | ❒ **VI** - Flouro-rubber Seals |
| ❒ **D** - Torque Arm | ❒ **PR** - Flange Pilot Removal | ❒ **OSG** - Oil Sight Glass |
| ❒ **H** - Hollow Shaft Cover | ❒ **SM5** - Stainless Steel Shaft | ❒ **OA** - Oil Expansion Chamber |
| ❒ **H66** - IP66 Hollow Shaft Cover | ❒ **SWA** - Special Hollow Shaft | ❒ **OC** - Oil Cooler |
| ❒ **VL** - Heavy Duty Output Bearings | ❒ **SWV** - Special Solid Shaft | ❒ **MDP** - Magnetic Drain Plug |
| ❒ **LL** - Long Term Storage | ❒ Cross Drilled Shaft | ❒ **ADP** - Additional Drain Plug |

❹

| Input Shaft | NEMA Adapter | IEC Adapter | Integral Motors | | Integral Energy Efficent Motors | | Sugar Scoop | Motor Platform | Servo Adapter (Keyed) |
|---|---|---|---|---|---|---|---|---|---|
| **W** | **N56C** | **IEC 63** | **63S/4** - 0.16hp | **100L/4** - 3hp | **80LH/4** - 1hp | **132SH/4** - 7.5hp | **S56** | **MKN056** | **SEP 100** |
| | **N140TC** | **IEC 71** | **63L/4** - 0.25hp | **100LA/4** - 5hp | **90SH/4** - 1.5hp | **132MH/4** - 10hp | **S140T** | **MKN140** | **SEP 130** |
| | **N180TC** | **IEC 80** | **71S/4** - 0.33hp | **112M/4** - 5.4hp | **90LH/4** - 2hp | **160MH/4** - 15hp | **S180T** | **MKN180** | **SEP 165** |
| | **N210TC** | **IEC 90** | **71L/4** - 0.50hp | **132S/4** - 7.5hp | **100LH/4** - 3hp | **160LH/4** - 20hp | **S210T** | **MKN210** | **SEP 215** |
| | **N250TC** | **IEC 100** | **80S/4** - 0.75hp | **132M/4** - 10hp | **112MH/4** - 5hp | | **S250T** | **MKN250** | **SEP 300** |
| | | **IEC 112** | **80L/4** - 1hp | **160M/4** - 15hp | | | | | **Servo Adapter (Clamp)** |
| | | **IEC 132** | **90S/4** - 1.5hp | **160L/4** - 20hp | | | | | **SEK 100** |
| | | **IEC 160** | **90L/4** - 2hp | | | | | | **SEK 130** |
| | | | | | | | | | **SEK 165** |
| | | | | | | | | | **SEK 215** |
| | | | | | | | | | **SEK 300** |

## Product Specifications

**Ratio**

:1

see pages 578 - 596

**OR**

**Output Speed**

rpm

see pages 578 - 596

**Mounting Position**

- ❍ M1
- ❍ M2
- ❍ M3
- ❍ M4
- ❍ M5
- ❍ M6
- ❍ Special _____

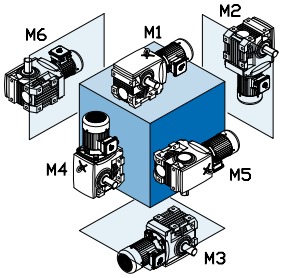


**Paint**

- ❍ Standard Stainles Steel Paint
- ❍ NSD+ (gray)
- ❍ NSD+W (white)
- ❍ NSD-X3 (gray)
- ❍ NSD-X3W (white)
- ❍ Casting Primed
- ❍ Special _____

**Lubricant**

- ❍ Standard
- ❍ Synthetic
- ❍ Food Grade
- ❍ Other _____

**Solid Shaft Side** (if required)

- ❍ Shaft Side A
- ❍ Shaft Side B
- ❍ Shaft Side A&B

see page 18

**Hollow Shaft Diameter** (if required)

see pages 669 - 671

**B5 Flange Side** (if required)

- ❍ Flange Side A
- ❍ Flange Side B
- ❍ Flange Side A&B

see page 18

**B5 Flange Diameter** (if required)

**Torque Arm Side & Location** (if required)

- ❍ Side A
- ❍ Side B

Location

see pages 18

**Shrink Disc Side** (if required)

- ❍ Side A
- ❍ Side B

see pages 18

**H66 Side** (if required)

- ❍ H66 Side A
- ❍ H66 Side B

see pages 18

## Gearmotor Only Details

**Voltage & Frequency**

- ❍ 230/460V-60Hz (460V only ≥ 40 hp)
- ❍ 575V-60Hz
- ❍ 208V-60Hz
- ❍ 400V-50Hz
- ❍ 115/230V-60Hz, 1 ph.
- ❍ Other _____

**Terminal Box Pos.**

- ❍ TB1
- ❍ TB2
- ❍ TB3
- ❍ TB4

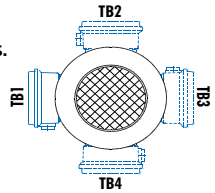


Mtg. Pos. M1 Shown

**Conduit Entry Loc.**

- ❍ CE I *
- ❍ CE II
- ❍ CE III *
- ❍ CE IV

* Brakemotor

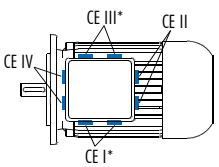


Mtg. Pos. M1 Shown



Send Quote Requests to info@automatedpt.com
Call +1(800)985-6929 To Order or Order Online At Nordgearmotors.com

INTRODUCTION

# Motor Order Form



NORD DRIVESYSTEMS

| | Frame | Size | Poles | Motor Options | Brake Size | Brake Options |
|---|---|---|---|---|---|---|
| **SK** | | | | | | |

| Frame | Size | Poles |
|---|---|---|
| 63 | S | 4 |
| 71 | SH | 2 |
| 80 | M | 6 |
| 90 | MH | 4-2 |
| 100 | MX | 8-2 |
| 112 | L | 8-4 |
| 132 | LA | 12-2 |
| | LH | Other |
| | LX | |

**Paint**

- ❍ Unpainted Aluminum Alloy
- ❍ Stainless Steel Paint
- ❍ NSD+ (gray)
- ❍ NSD+W (white)
- ❍ NSD-X3 (gray)
- ❍ NSD-X3W (white)
- ❍ Special _____

**Electrical Motor Options**

- ❒ **H** - Energy Efficient Motor
- ❒ **TW** - Thermostat
- ❒ **TF** - Thermistor
- ❒ **SH** - Space Heater (select voltage)
  - ❍ 110 Volt ❍ 230 Volt ❍ 460 Volt
- ❒ **ISO** H - Class H insulation
- ❒ **WU** - High Resistance Rotor
- ❒ **4-2** - 2-Speed, 4/2 Pole, 1800/3600rpm
- ❒ **8-2** - 2-Speed, 8/2 Pole, 900/3600rpm
- ❒ **ECR** - Single Phase Motor

**Environmental Options**

- ❒ **NSD+** - Nord Severe Duty Paint
- ❒ **NSDx3** - Nord Extreme Duty Paint
- ❒ **RD** - Canopy Drip Cover
- ❒ **RDD** - Double Fan Cover
- ❒ **KB** - Condensation Drain Holes (plugged)
- ❒ **KBO** - Condensation Drain Holes (open)
- ❒ **IP66** - IP66 Enclosure Protection
- ❒ **KKV** - Terminal Box Sealed with Resin
- ❒ **AICM** - Additional Insulation
- ❒ **EP** - Epoxy Dipped Windings

**Frequency Inverter Related Options**

- ❒ **F** - Blower Fan (200-575V 1 & 3 Phase)
- ❒ **FC** - Blower Cooling Fan (115V, 1 Phase)
- ❒ **IG__** - Incremental Encoder
- ❒ **IG__P** - Incremental Encoder with Plug
- ❒ **AG** - Absolute Encoder

**Additional Motor Options**

- ❒ **OL** - Totally Enclosed Non-Ventilated (TENV)
- ❒ **OL/H** - (TENV) Without Fan Cover
- ❒ **WE** - Second Shaft Extension (Fan Side)
- ❒ **HR** - Hand Wheel
- ❒ **Z** - High Inertia Cast Iron Fan
- ❒ **RLS** - Motor Backstop (rotation viewing fan)
  - ❍ Clockwise ❍ Counter-Clockwise
- ❒ **EKK** - Small Terminal Box (not UL approved)
- ❒ **MS** - Quick Power Plug Connector

| Brake Size |
|---|
| BRE 5 |
| BRE 10 |
| BRE 20 |
| BRE 40 |
| BRE 60 |
| BRE 100 |
| BRE 150 |

- ❒ **HL** - Hand Release Lever
- ❒ **FHL** - Locking Hand Release Lever
- ❒ **HLH** - Hand Release Lever with Hole
- ❒ **RG** - Corrosion Protected Brake
- ❒ **SR** - Dust and Corrosion Protected Brake
- ❒ **ADJ_____Nm** - Adjust Brake Torque
- ❒ **BIP66** - IP66 Brake Enclosure
- ❒ **MIK** - Micro-switch
- ❒ **BSH** - Brake Heating/Bifilar Coil
- ❒ **NRB1** - Quiet Brake Release
- ❒ **NRB2** - Quiet Brake Motor Operation
- ❒ **FBR** - Brass Foil
- ❒ **DBR** - Double Brake
- ❒ **G...P** - High Performance Rectifier
- ❒ **G...V** - Sealed Rectifier
- ❒ **IR** - Current Sensing Relay

**Rectifier Selection** ⇨📖 732 - 735

**Rectifier Wiring**

- ❍ Across the line (from motor terminal box)
- ❍ Separate power source (frequency inverter, soft starter)

**Brake Supply Voltage**

- ❍ 24 VDC
- ❍ 115 VAC
- ❍ 200 VAC
- ❍ 230 VAC
- ❍ 400 VAC
- ❍ 460 VAC
- ❍ 500 VAC
- ❍ 575 VAC
- ❍ Other _____

**Braking Method**

- ❍ Method 10
- ❍ Method 15
- ❍ Method 20
- ❍ Method 25
- ❍ Method 30
- ❍ Method 35
- ❍ Method 40
- ❍ Method 45
- ❍ Method 50
- ❍ Method 55

**Hand Release Position**

- ❍ HL1
- ❍ HL2
- ❍ HL3
- ❍ HL4

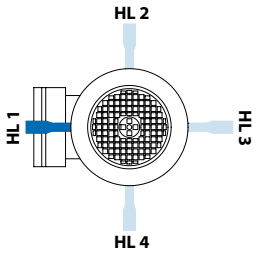


**Mounting**

- ❍ Integral to gearbox
- ❍ NEMA C-Face
- ❍ IEC B5 Mount

**Voltage & Frequency**

- ❍ 230/460V-60Hz
- ❍ 575V-60Hz
- ❍ 208V-60Hz
- ❍ 400V-50Hz
- ❍ 115/230V, 60Hz-1-ph.
- ❍ Other

**Terminal Box Pos.**

- ❍ TB1
- ❍ TB2
- ❍ TB3
- ❍ TB4

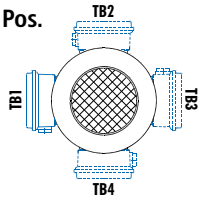


Mtg. Pos. M1 Shown

**Conduit Entry Loc.**

- ❍ CE I *
- ❍ CE II
- ❍ CE III *
- ❍ CE IV

* Brakemotor

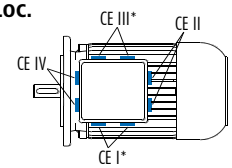


Mtg. Pos. M1 Shown


Send Quote Requests to info@automatedpt.com
Call +1(800)985-6929 To Order or Order Online At Nordgearmotors.com

Send Quote Requests to info@automatedpt.com Call +1(800)985-6929 To Order or Order Online At Nordgearmotors.com



## Gearbox Selection

A number of factors are considered when selecting a gear unit, including gearbox rating, service factor, speed and speed variation, horsepower, thermal capacity, ratio, physical size, ambient conditions and cost. Below are some guideline steps to help aid in the gear unit selection.

1. Determine the speed and/or gear ratio
2. Determine the required power or torque
3. Determine Service Factor
4. Select the basic gearbox type and input
5. Determine the required mounting position
6. Select options
7. Checks – overhung load, thrust load, NEMA motor weight, thermal considerations, and other application considerations

### 1. Speed and Gear Ratio

The first step in selecting a gear unit is determining the final output speed or speeds you need. This speed is normally described in revolutions per minute (rpm). This output speed or speeds is determined by the input speed to the gear unit divided by its gear ratio. Their relationship is described by the following formulas.

$$\text{i (gear ratio)} = \frac{\text{Input speed [rpm]}}{\text{Output speed [rpm]}}$$

$$\text{Output speed [rpm]} = \frac{\text{Input speed [rpm]}}{\text{i (gear ratio)}}$$

To specify a gear unit, you can identify either gear ratio needed or the output speed (rpm) if the input speed is known.

### 2. Power and Torque

The second step for selecting a gear unit is the required power or torque needed to power the load. Torque in this catalog is normally expressed in pound-inches [lb-in].

$$\text{Power [hp]} = \frac{\text{Torque [lb-in] x speed [rpm]}}{63025}$$

$$\text{Torque [lb-in]} = \frac{\text{Power [hp] x 63025}}{\text{speed [rpm]}}$$

For a proper selection you must ensure that the motor or other prime mover can produce enough torque or power and that the gear unit has adequate torque or power capacity. You must also consider if the power or torque is specified at the input or output of the gear unit. The Helical-worm gear units have lower efficiency than in-line or bevel gear units, therefore helical-worm products efficiency may need to be considered in the selection.

To specify a gear unit you can identify torque or power.

### 3. Service Factor or Service Class

In addition to power or torque, service factor must also be considered. A service factor is essentially the ratio of extra capacity in a gear unit compared to the power or torque that is needed to run that application. The goal of selecting a gear unit with extra capacity (service factor) is to provide adequate service life in operation.

One reason to apply a larger service factor is if a unit operates more hours per day. If a unit runs 24 hours per day it should normally have a higher service factor than a unit that runs 8 hours per day if you expect the same calendar life.

A second reason for applying a larger service factor is to cope with a more difficult application. Even if it takes the same power and speed to operate a rock crusher as a fan, the rock crusher needs a stronger gearbox (higher service factor) to give the same operating life as the gear unit powering the fan.

The real question is how to determine the proper service factor for a gear unit in an application. Following are four possible methods.

#### Customer or User Specification

Many customers will have their own service factor guidelines or specifications.

#### AGMA Service Factoring

American Gear Manufacturers Association (AGMA) publishes lists of recommended service factors for different applications. These service factor recommendations have been determined form the experience of many gear manufactures and are in AGMA standard 6010. See page 68 for additional detail.

#### AGMA Service Classes

American Gear Manufactures Association (AGMA) has another method for selecting gear units service factors. AGMA standard 6009 lists many applications by a service class (I, II, III) with class I being the simplest applications and class III being the hardest. These application service classes are associated with a range of service factors by the following table.

| AGMA Service Class | Service Factor |
|---|---|
| I | 1.00 to 1.39 |
| II | 1.40 to 1.99 |
| III | 2.00 and above |

In the gearmotors selection table each unit is also classified by an AGMA service class. See page 64 for additional detail.



Send Quote Requests to info@automatedpt.com
Call +1(800)985-6929 To Order or Order Online At Nordgearmotors.com

# Selection Information

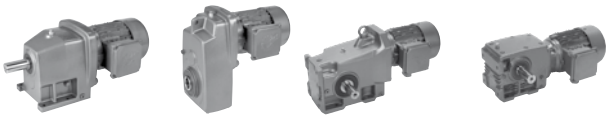

DRIVESYSTEMS

### NORD Mass Acceleration Service Factoring

NORD often uses a calculation based system to properly assign a service factor. This system considers hours of operation per day, the severity of the application and the number of times the equipment is cycled. See page 62 for additional detail.

### 4. Gearbox Type & Input

NORD gear drives are available in a number of mechanical configurations including:

- Helical in-line
- Clincher™ shaft mount
- Right-angle helical-bevel
- Right-angle helical-worm

NORD's modular design allows for a number of different inputs to be added to NORD reducers including:

- Integral motor
- NEMA-C and IEC motor adapter
- Solid input shaft
- Servo motor adapter
- Sugar scoop mount
- Top motor mount platform
- NORDISC™ variable speed friction drives
- Titan™ variable speed belt boxes

### 5. Mounting Position

The gearbox mounting position is an important and often overlooked specification. The mounting position determines how much oil the gear reducer requires, in addition to determining the position of the oil drain, oil fill and vent on the gear drive. NORD offers six basic mounting positions. If your application requires a variation from the six basic mounting positions, please contact NORD.

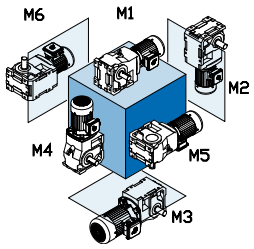


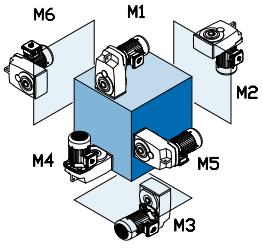


Many gearbox and motor options require a location designation. For example a right-angle helical-bevel unit with a single solid shaft extension requires a shaft extension side location. Please see page 18 for additional options that require location designation.

### 6. Options

NORD offers a number of mechanical, protective, paint & lubrication options for gear reducers & motors. Please see page 19 for gear unit options & refer to the motor section (Section G) for motor options.

### 7. Checks

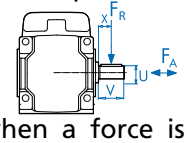


### Overhung Load

An overhung or radial load exists when a force is applied at right-angles to a shaft beyond the shaft's outermost bearing. Pulleys, sheaves and sprockets will cause an overhung load when used as a power take-off. The amount of overhung load will vary, depending on the type of power take-off used and where it is located on the shaft.

Overhung load [FQ] can be found in the gearmotor rating tables and input shaft overhung load ratings [FQ1] can be found on pages 52 - 59. Overhung load capacities should not exceed the values in the table to ensure long bearing life. Overhung load capacities are to be applied at the midpoint of the shaft extension and without thrust loads.

To calculate overhung load see page 52.

### Thrust Loads (Axial)

Loads that are directed towards or away from the gearbox along the axis of the shaft are called thrust or axial loads. Output shaft thrust capacity [FA] can be found in the gearmotor rating tables. Input shaft capacity [FA1] can be found on pages 58. Thrust load capacities should not exceed the values listed in the tables to ensure long bearing life. Thrust load capacities are listed for pure axial loads with no overhung load. Contact NORD for combination loads or a more exact examination of the application.

### NEMA C-face Motor Weight Limits

When mounting a motor to a NORD NEMA C-face motor adapter it is important to consider the motor's weight. Following is a table that includes the maximum motor weight the NEMA adapter can support. If the motor exceeds the listed weight is must be externally supported. When a C-face mounted motor is externally supported care must be taken to ensure that the support system does not impose additional pre-loads on the NEMA motor adapter.

**NEMA Weights**

| Motor FRAME | 56C | 143TC | 145TC | 182TC | 184TC | 210TC |
|---|---|---|---|---|---|---|
| Max Weight [lb] | 66 | 88 | 110 | 130 | 175 | 220 |
| **Motor FRAME** | **250TC** | **280TC** | **324TC** | **326TC** | **365TC** | |
| Max Weight [lb] | 450 | 550 | 770 | 1100 | 1550 | |



Send Quote Requests to info@automatedpt.com
Call +1(800)985-6929 To Order or Order Online At Nordgearmotors.com

Send Quote Requests to info@automatedpt.com Call +1(800)985-6929 To Order or Order Online At Nordgearmotors.com



## General Warnings & Cautions

Applications with risk of personal injury should be reviewed together with NORD. Examples of these are hoist, lifts or other applications where people may be at risk.

## Helical-worm Efficiency

NORD worm gear units can reach efficiencies up to 92%.

Worm gears require a run-in period to reach their peak efficiency. Due to this the unit efficiency will be lower when the gear unit is new. The effect is greater at lower worm incline angles meaning with worms that have a low number of worm starts (or leads). Based on experience the following reduction in efficiency should be considered before the run-in is completed

| Worm Starts (leads) | Reduction in efficiency |
|---|---|
| 1 | 12% |
| 2 | 6% |
| 3 | 3% |
| 6 | 2% |

The number of worm starts is listed in the gear ratio tables in the helical-worm reducer ratings tables.

The run-in period is approximately 25 hours of operation at maximum load.

Following conditions must be met in order to reach the catalog efficiency values.

- Gear unit is fully run-in
- Gear unit has reached a constant temperature
- The required type of lubricant is used
- The required lubrication quantity is used
- The unit is operating at full rated torque

## Vertical Mounting Position for Gear Units & Motors

Observe thermal limit rating – see page 14. For motors which are mounted vertically upwards (Mounting position M4) and ratios < 24, we highly recommend oil expansion chambers in order to avoid leakage through the vent plug.

NEMA and IEC adapters use in hoist, lifts and other applications with danger of personal injury should be reviewed together with NORD.

NEMA/IEC adapter have additional shaft coupling and additional bearing seats compared to integral motors so there are higher no-load losses with NEMA or IEC adapters. We recommend mounting the motor directly, since it offers both technical and cost advantages.

## External Installation, Tropical Use

Gearboxes installed outside, in damp rooms, or used in the tropics may require special seals & anti-corrosion options. Please contact NORD for application assistance.

## Special conditions

If special environmental or other conditions exist in transit, storage or operation these need to be considered in the unit selection. Special conditions may include (but are not limited to) the following:

- Exposure to aggressive corrosive materials (contaminated air, gasses, acids, bases, salts, etc.)
- Very high relative humidity
- Direct contact between t he motor and liquid
- Material build- up on the gear unit or motor (dirt, dust, sand, etc.)
- High atmospheric pressure
- Radiation
- Extreme temperatures, high, low or large temp. changes
- High vibration, accelerations, shock or impacts
- Other abnormal conditions

## Storage Before Installation

The gear units and motors should be stored in a dry area before they are to be installed. Special measures are required for longer storage. Please request long term storage instructions from NORD Gear or from the NORD web site.

## Multi-stage Gear Units

With 4-, 5-, 6-stage multi-stage gear units, there are additional no-load loss due to the added rotating parts and the relatively small drive input power. Thus, a no-load loss of approximately 40 watts for 4-pole motors up to 1 HP (0.75 kW) is accounted for in the performance tables.

## NEMA C-Face Adapter Capacity

The NEMA adapters are designed to handle the torques produced by the standard NEMA power assignment at 4 pole (1800 rpm) motor speeds. If a larger motor power is used than the power below NORD should be consulted. Also if a NEMA adapter is being used for other than an AC induction motor NORD should be consulted.

| Adapter | Max Power [hp] | Adapter | Max Power [hp] |
|---|---|---|---|
| 56C | 1 | 250TC | 20 |
| 140TC | 2 | 280TC | 30 |
| 180TC | 5 | 320TC | 50 |
| 210TC | 10 | 360TC | 75 |



Send Quote Requests to info@automatedpt.com
Call +1(800)985-6929 To Order or Order Online At Nordgearmotors.com

# Selection Information



## Gear Reducer Ratings

The permissible continuous power limit of gear reducers is limited by both the mechanical rating and the thermal rating. The mechanical rating depends upon the material strength of the gear reducer's gears, bearings, housing, shafts, etc. The mechanical input power limit to the reducer is also a function of the mechanical power rating divided by the relevant reducer service factor.

The thermal rating or thermal limit depends upon the amount heat generated within the reducer and is influenced by a variety of factors including:

- Churning or splashing losses in the lubricant which depend upon reducer type, ratio, input style, mounting position or oil fill-level, and the circumferential travel velocities of the gear wheels.
- The actual speed and load conditions. These factors determine load-dependent losses in the gears and frictional losses in the gears, bearings and seal areas.
- Ambient Conditions:
  - Ambient Temperature.
  - Amount of free air circulation around the drive.
  - Possible near-by heat sources.
  - Heat dissipation or the ability of the reducer to transfer heat through the housing, shafts, and the mating sub-structure or mounting surface.

## Observing the Reducer's Thermal Limit

### When to Contact NORD

Through computer program analysis NORD can evaluate application conditions and the impact they have on a reducer's thermal capacity.

When applying helical in-line, Clincher™ shaft mount, & helical-bevel gear units of case sizes 6 & larger (SK62, SK6282 and SK9072.1 and larger), consult NORD if any two or more of the following conditions apply:

- Gear ratio, $i_{total} \leq 24{:}1$ or $\leq 48{:}1$ for helical-bevel units
- Input power, $P_1 \geq 60$ hp (45 kw)
- Input speed, $n_1 > 1800$
- Vertical positioning (mounting position M2 or M4)
- Input configuration: NEMA C-face, IEC, servo adapter or solid-shaft input (Type-W)
- Elevated ambient temperature ≥ 86° F (30 °C)

When applying helical worm or worm gear units, please consult NORD if one of the following conditions applies:

- Input speed, $n_1 > 1800$
- Vertical positioning (mounting position M2 or M4)
- Input configuration: NEMA C-face, IEC, servo adapter or solid-shaft input (Type-W)
- Elevated ambient temperature ≥ 86° F (30 °C)

Advise NORD of any special application considerations:

- Confined space or limited air circulation
- Exposure to other near-by radiant heat sources
- Dirty or dusty environments
- High altitude operation > 3,280 ft (1000 m) a.s.l.

## Dangers of Reducer Overheating

The following problems may result when a reducer's thermal capacity or maximum oil sump temperatures are exceeded:

- Lubrication oxidation, breakdown & deterioration.
- A decrease in lubrication viscosity & film thickness.
- Loss of critical bearing and gear clearances required for proper lubrication.
- Increased contact pressures & increased operating temps. in the critical load zones of the gearing and bearings.
- An increased possibility for metal-to-metal contact and premature component wear.
- A significant reduction in the lubricant's ability to prevent scuffing, pitting, and in extreme cases galling or welding.

## Maximum Oil Sump Temperature Limit

To prevent reducer overheating, the reducer's maximum oil sump temperature limit must not be exceeded for prolonged periods of operation (up to 3 hours continuous operation, depending upon reducer size).

| Oil Type | Maximum Oil Temperature Limit | |
|---|---|---|
| | NORD | AGMA 9005-D94 |
| Mineral | 80-85 °C (176-185 °F) | 95 °C (203 °F) |
| Synthetic | 105 °C (220 ° F) | 107 ° C (225 ° F) |

## Measures to Expand the Application Range

There are a variety of measures that may be taken in order to protect against thermal overload and expand the application range of the gear reducer. Common examples include the following:

- Recommending a change in lubrication viscosity and/or a specific synthetic lubricant type.
- Applying high-temperature seals.
- Increasing air flow around the gear unit.
- Protecting the reducer from high heat sources.
- Considering an integral motor instead of the bolt-on input assembly covers. In many cases the motor fan will substantially increase air-flow around the gear unit.
- Add an Oil Expansion/Overflow Chamber (Option "OA") or an Oil Reservoir (Option "OT").
- Oil Cooler (Option "OC").
- Water Cooling Cover (Option "WC")


Send Quote Requests to info@automatedpt.com
Call +1(800)985-6929 To Order or Order Online At Nordgearmotors.com

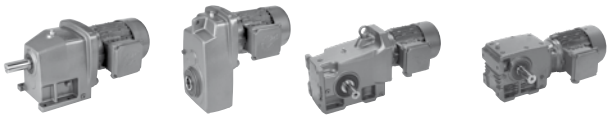

# Selection Inquiry



**Contact:** _____ **Company:** _____

**Telephone:** _____ **Email:** _____

**Fax:** _____ **Date:** _____

**Project Name:** _____ **Application:** _____

**Qty:** _____ **Type: SK** _____

## Gearbox Parameters

**Unit**

❍ Gearmotor
❍ Gearbox with Solid Input Shaft
❍ Gearbox with Motor Adapter
❍ Motor Only

**Mounting Position**

❍ M1 ❍ M4
❍ M2 ❍ M5
❍ M3 ❍ M6
❍ Special _____

**Lubricant**

❍ Standard
❍ Synthetic
❍ Food Grade
❍ Other _____

**Shaft**

❍ Solid Shaft, Diameter _____ ❍ inch ❍ mm

Shaft Location (For Bevel & Worm only)
❍ Shaft Side A
❍ Shaft Side B
❍ Shaft Side A & B

❍ Hollow Shaft, Diameter _____ ❍ inch ❍ mm

**Flange**

❍ None
❍ B14
❍ B5 Outside Diameter _____ [mm]

Ratio _____ : 1 or Output Speed _____ [rpm]

Output Torque _____ [lb-in] or Power _____ [hp]

Minimum Service Factor [$f_b$] _____ [lb]

Radial Load at Output Shaft [$F_Q$] _____ [lb]

Axial Load at Output Shaft [$F_A$] _____ [lb]

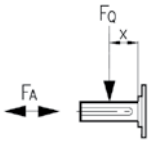


Distance from Shaft Shoulder [x] _____ [in]

Minimum Required Bearing Lifetime Lh10 _____ [hours]

**Bearing Type**

❍ Standard
❍ VL - Heavy Duty
❍ AL - Axial/Thrust
❍ VL2
❍ VL3
❍ VL4

## Environmental Parameters

Ambient Temperature Range _____ °F to _____ °F

**Location of Unit**

❍ Indoor
❍ Outdoor
❍ Severe Environment

**Paint**

❍ Standard Stainless Steel Paint
❍ NSD+ (gray)
❍ NSD+W (white)
❍ NSD-X3 (gray)
❍ NSD-X3W (white)
❍ Casting Primed
❍ Special _____

## Motor Parameters

Power _____ [hp]

**Voltage & Frequency**

❍ 230/460V-60Hz (460V only ≥ 40 hp)
❍ 575V-60Hz
❍ 208V-60Hz
❍ 400V-50Hz
❍ 115/230V-60Hz, 1 ph.
❍ Other _____

**Enclosure**

❍ IP55 (Standard)
❍ IP66

**Insulation Class**

❍ F (Standard)
❍ H

**Duty**

❍ S-1 Continuous Operation
❍ Periodic/Short Time Operation

**Thermal Protection**

❍ None
❍ Thermostat
❍ Thermistor

Cycles Per Hour _____ cycles/hour

**Terminal Box Position**

❍ TB1
❍ TB2
❍ TB3
❍ TB4

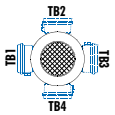


**Conduit Entry Location**

❍ CE I *
❍ CE II
❍ CE III *
❍ CE IV
* Brakemotor

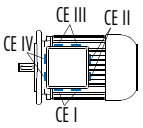


## Brake Parameters

**Brake**

❍ No Brake (continue to next section)
❍ Holding Brake/Emergency Brake
❍ Working Brake

**Brake Supply**

❍ Line power from motor terminal block
❍ Separate Power Source

Brake AC Supply _____ [Volts]

Brake Torque _____ [Nm]

**Brake Release**

❍ Standard
❍ Fast

**Brake Stopping**

❍ Standard
❍ Fast
❍ Very Fast

## Frequency Inverter Parameters

**Frequency Inverter**

❍ No Frequency Inverter
❍ Customer Supplied Inverter
❍ NORD Panel Mounted Frequency Inverter
❍ NORD Motor Mounted Frequency Inverter

Line Voltage: _____ [Volts] Frequency _____ [Hz]

Operating Frequency Range: _____ [Hz] to _____ [Hz]

**How is the Inverter Controlled?**

❍ PC
❍ Operator Control
❍ Other

**Bus System?**

❍ None
❍ Profibus
❍ CANBus
❍ AS Interface
❍ InterBus
❍ CANopen
❍ RS232

**Are You Using an Encoder?**

❍ No
❍ Yes → ❍ Position Feedback ❍ Speed Control


Send Quote Requests to info@automatedpt.com
Call +1(800)985-6929 To Order or Order Online At Nordgearmotors.com

Send Quote Requests to info@automatedpt.com
Call +1(800)985-6929 To Order or Order Online At Nordgearmotors.com



# Mounting Positions

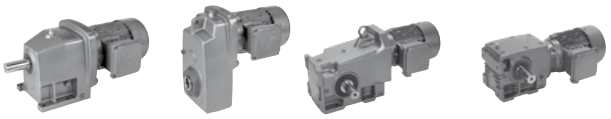

## Mounting Positions

The reducer mounting position determines the approximate oil fill level and the appropriate vent location. In some cases mounting position may dictate possible variation in final reducer assembly. If considering any mounting positions that are not shown as catalog-standard options, it is critical that the customer consult with NORD prior to ordering.

### In-line

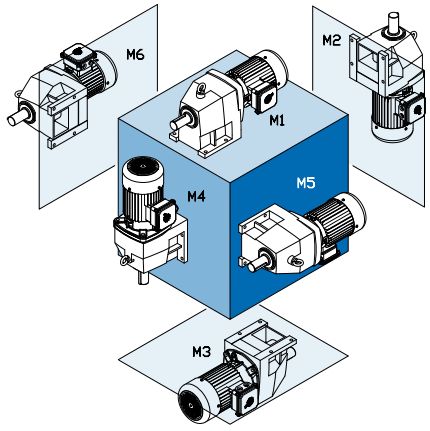


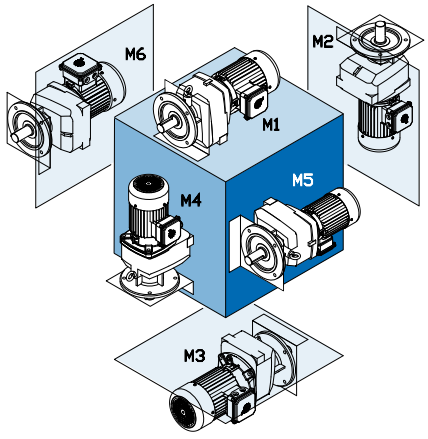


### Clincher™

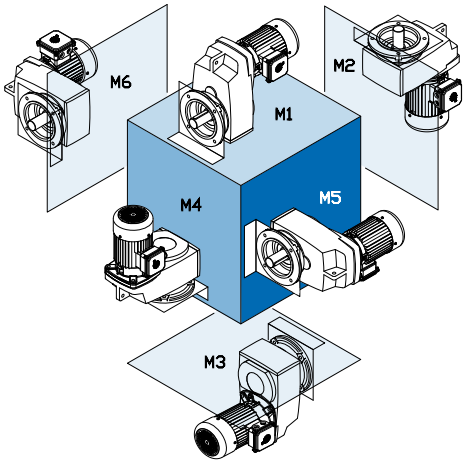


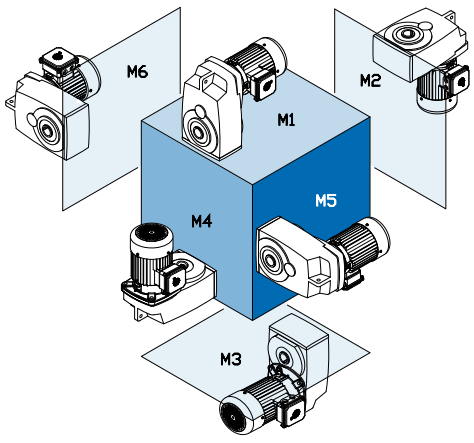


### Right-Angle

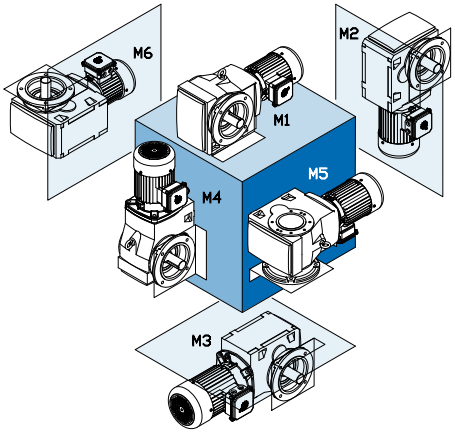


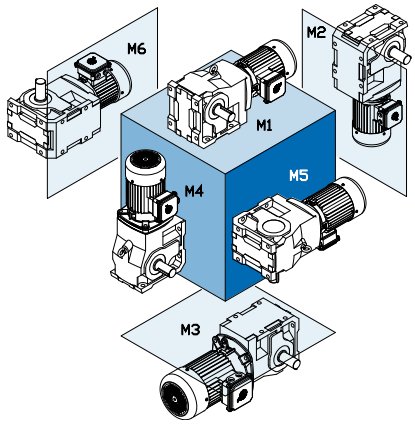



Send Quote Requests to info@automatedpt.com
Call +1(800)985-6929 To Order or Order Online At Nordgearmotors.com



# Mounting Positions



## Mounting Positions

The reducer mounting position determines the approximate oil fill level and the appropriate vent location. In some cases mounting position may dictate possible variation in final reducer assembly. If considering any mounting positions that are not shown as catalog standard options, it is critical that the customer consult with NORD prior to ordering.

## New Mounting Position System

NORD is in the processes of changing mounting position systems. Historically the NORD mounting position system was based on international motor standards. NORD is changing in an effort to simplify the system. The new system is based on the six sides of a cube. Below is a cross reference between the old and new mounting position codes.

**Mounting Position Cross Reference Table (old to new)**

| Helical Gear Units (In-line) | | Parallel Shaft Gear Units (Clincher™) | | Helical-bevel Gear Units | | Helical-worm Gear Units | |
|---|---|---|---|---|---|---|---|
| Old | New | Old | New | Old | New | Old | New |
| B3 | M1 | H1 | M1 | B3 | M1 | B3 | M1 |
| B5 | M1 | H2 | M3 | B3I | M4 | B3I | M4 |
| B5I | M3 | H3 | M6 | B5 | M2 | B5 | M2 |
| B5II | M5 | H4 | M5 | B5I | M1 | B5I | M1 |
| B5III | M6 | H5 | M4 | B5II | M4 | B5II | M4 |
| B6 | M5 | H6 | M2 | B5III | M3 | B5III | M3 |
| B7 | M6 | | | B6 | M2 | B6 | M2 |
| B8 | M3 | | | B6I | M1 | B6I | M1 |
| V1 | M4 | | | B6II | M4 | B6II | M4 |
| V3 | M2 | | | B8 | M3 | B8 | M3 |
| V5 | M4 | | | B8I | M2 | B8I | M2 |
| V6 | M2 | | | H1 | M1 | H1 | M1 |
| | | | | H2 | M3 | H2 | M3 |
| | | | | H3 | M4 | H3 | M4 |
| | | | | H4 | M2 | H4 | M2 |
| | | | | H5 | M5 | H5 | M5 |
| | | | | H6 | M6 | H6 | M6 |
| | | | | V1 | M5 | V1 | M5 |
| | | | | V3 | M6 | V3 | M6 |
| | | | | V5 | M5 | V5 | M5 |
| | | | | V5I | M5 | V5I | M5 |
| | | | | V6 | M6 | V6 | M6 |
| | | | | V6I | M6 | V6I | M6 |

**Mounting Position Cross Reference Table (new to old)**

| Helical Gear Units (In-line) | | Parallel Shaft Gear Units (Clincher™) | | Helical-bevel Gear Units | | Helical-worm Gear Units | |
|---|---|---|---|---|---|---|---|
| New | Old | New | Old | New | Old | New | Old |
| M1 | B3, B5 | M1 | H1 | M1 | B3, B5I, B6I, H1 | M1 | B3, B5I, B6I, H1 |
| M2 | V3, V6 | M2 | H6 | M2 | B5, B6, B8I, H4 | M2 | B5, B6, B8I, H4 |
| M3 | B5I, B8 | M3 | H2 | M3 | B5III, B8, H2 | M3 | B5III, B8, H2 |
| M4 | V1, V5 | M4 | H5 | M4 | B3I, B5II, B6II, H3 | M4 | B3I, B5II, B6II, H3 |
| M5 | B5II, B6 | M5 | H4 | M5 | H5, V1, V5, V5I | M5 | H5, V1, V5, V5I |
| M6 | B5III, B7 | M6 | H3 | M6 | H6, V3, V6, V6I | M6 | H6, V3, V6, V6I |


Send Quote Requests to info@automatedpt.com
Call +1(800)985-6929 To Order or Order Online At Nordgearmotors.com

# Mounting Positions

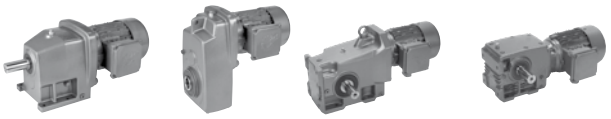

## Mounting Configuration

NORD provides gearmotors, speed reducers and motors that can be configured very flexibly to suit customer needs. When ordering it is beneficial that the drive be specified exactly the way you want it delivered.

**Mounting Positions**

### Basic mounting

❍ M1 ❍ M2 ❍ M3 ❍ M4 ❍ M5 ❍ M6

### Right-angle with solid shaft

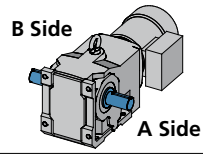


❍ Shaft Side A
❍ Shaft Side B
❍ Shaft Side A+B

### Right-angle with shrink disc

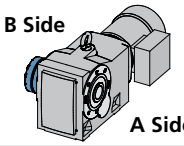


❍ Shrink Disc Side A
❍ Shrink Disc Side B

### Right-angle flange mount units

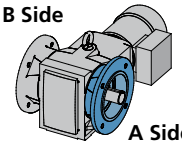


❍ Flange Side A
❍ Flange Side B
❍ Flange Side A+B

### Right-angle with hollow shaft cover

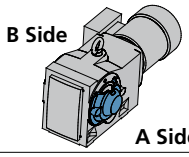


❍ Hollow Shaft Cover Side A
❍ Hollow Shaft Cover Side B

### Right-angle with torque arm

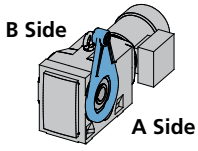


❍ Torque Arm Side A
❍ Torque Arm Side B

**Shaft mount torque arm orientation**

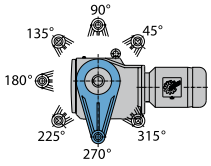


Orientation _____

| | |
|---|---|
| 92 - Bevel | 90˚ - 315˚, Every 45° |
| 90 - Bevel | 45˚ - 270˚, Every 45° |
| Helical-worm | 45˚ - 270˚, Every 45° |
| Helical-worm 02040 | 90˚, 180˚, 270˚, Every 90° |

### Bottom mount torque arm

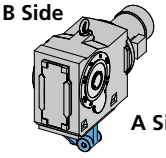


❍ Torque Arm Side A
❍ Torque Arm Side B

### Brake motor with hand release lever

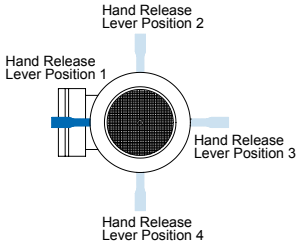


❍ Hand Release Lever Pos. 1
❍ Hand Release Lever Pos. 2
❍ Hand Release Lever Pos. 3
❍ Hand Release Lever Pos. 4

### Terminal box location

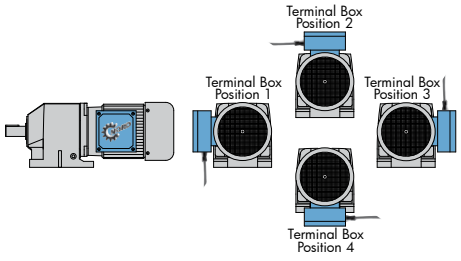


❍ Terminal Box Position 1 ❍ Terminal Box Position 3
❍ Terminal Box Position 2 ❍ Terminal Box Position 4

### Conduit entry location

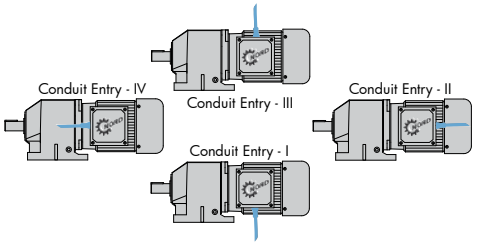


❍ Conduit Entry Location I* ❍ Conduit Entry Location III*
❍ Conduit Entry Location II ❍ Conduit Entry Location IV
* Denotes Brakemotor


Send Quote Requests to info@automatedpt.com
Call +1(800)985-6929 To Order or Order Online At Nordgearmotors.com

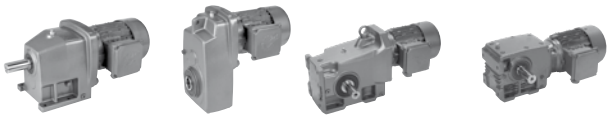

# Gear Unit Options



**Overview of available designs**

| Abbreviation | Description | Page | Helical in-line gear units | Clincher™ units | Bevel Units | Worm gear units |
|---|---|---|---|---|---|---|
| **none** | Solid shaft, foot mount | 21 | ✓ | | ✓ | ✓ |
| **none** | Clincher with B14 on motor side | 24 | | ✓ | | |
| **A** | Keyed hollow shaft | 21 | | ✓ | ✓ | ✓ |
| **ADP** | Additional drain plug | 27 | ✓ | ✓ | ✓ | ✓ |
| **B** | Fixing element kit | 23 | | ✓ | ✓ | ✓ |
| **D** | Torque arm | 22 | | | ✓❶ | ✓ |
| **DR** | Autovent | 27 | ✓ | ✓ | ✓ | ✓ |
| **E** | Single stage | – | ✓❷ | | | |
| **EA** | Hollow shaft with spline | 22 | | ✓ | ✓ | ✓ |
| **F** | B5 flange | 20 | ✓ | ✓ | ✓ | ✓ |
| **FV** | Filtered vent | 27 | ✓ | ✓ | ✓ | ✓ |
| **G** | Rubber buffers | 23 | | ✓ | | |
| **H** | Hollow shaft cover | 23 | | ✓ | ✓ | ✓ |
| **H66** | IP66 hollow shaft cover | 23 | | ✓ | ✓ | ✓ |
| **K** | Bottom mount torque arm | 22 | | | ✓❸ | |
| **L** | Double solid shaft | 21 | | ✓❹ | ✓ | ✓ |
| **LL** | Long term storage | 27 | ✓ | ✓ | ✓ | ✓ |
| **MDP** | Magnetic drain plug | 27 | ✓ | ✓ | ✓ | ✓ |
| **OA** | Oil expansion chamber | 24 | ✓ | ✓ | ✓ | ✓ |
| **OC** | Oil cooler | 24 | ✓ | ✓ | ✓ | ✓ |
| **OSG** | Oil sight glass | 27 | ✓ | ✓ | ✓ | ✓ |
| **OT** | Oil reservoir tank | 24 | | ✓❺ | | |
| **OV** | Open vent | 27 | ✓ | ✓ | ✓ | ✓ |
| **PR** | B5 flange pilot removal | 20 | ✓ | ✓ | ✓ | ✓ |
| **R** | Backstop | 24 | | | ✓ | |
| **RLS** | Backstop in the W input | – | ✓ | ✓ | ✓ | ✓ |
| **S** | Shrink disc | 21 | | ✓ | ✓ | ✓ |
| **SCP** | Screw conveyor package | 29 | ✓ | ✓❻ | ✓❼ | |
| **SH** | Shrink disc and cover | 21 & 23 | | ✓ | ✓ | ✓ |
| **SM5** | Stainless steel output shaft | 21 | ✓ | ✓ | ✓ | ✓ |
| **SWA** | Special hollow shaft | 22 | | ✓ | ✓ | ✓ |
| **SWV** | Special solid shaft | 21 | ✓ | ✓ | ✓ | ✓ |
| **V** | Solid shaft | 21 | | ✓ | ✓ | ✓ |
| **VG** | Heavy duty rubber buffers | 23 | | ✓❽ | | |
| **VI** | (FKM) Fluoro-rubber seals | 22 | ✓ | ✓ | ✓ | ✓ |
| **VL** | Heavy duty output bearings | 22 | ✓ | ✓ | ✓ | ✓ |
| **VL2** | Spread bearing design | 25 | | ✓ | ✓ | |
| **VL3** | Spread bearing design with oil safe dry cavity | 25 | | ✓ | ✓ | |
| **VL4** | Drywell with heavy duty drop bearings | 26 | | ✓ | ✓ | |
| **VS** | Heavy duty shrink disc | 21 | | ✓❾ | ✓❿ | |
| **WC** | Water cooling cover | 24 | | ✓⓫ | ✓⓬ | |
| **X** | Foot mount | 20 | ✓ | ✓ | ✓ | ✓ |
| **XF** | Foot mount with B5 flange | 21 | ✓⓮ | | | |
| **XZ** | Foot mount with B14 flange | 21 | ✓⓮ | | | |
| **Z** | B14 flange | 20 | ✓⓭ | ✓ | ✓ | ✓ |
| **none** | Paint coatings | 28 | ✓ | ✓ | ✓ | ✓ |

✓ Available designs are marked with a checkmark

❶ Not available for SK 9082.1 and larger
❷ Available for SK11E - SK 51E
❸ Not available for SK 92072 - SK 92772
❹ Special shaft design
❺ Available for SK 9282 and larger
❻ Available for SK 1282SCP - SK 6382SCP
❼ Available for SK 9012.1SCP - SK 9053.1SCP
❽ Available for SK 7282 and larger
❾ Available for SK 7282, SK 8282, SK 9282, SK 11282
❿ Available for SK 9072.1 and larger
⓫ Available for SK 6282 and larger
⓬ Available for SK 9082.1 and larger
⓭ Available for SK 12 - SK 63
⓮ Available for SK 12 - SK 53


Send Quote Requests to info@automatedpt.com
Call +1(800)985-6929 To Order or Order Online At Nordgearmotors.com

Send Quote Requests to info@automatedpt.com Call +1(800)985-6929 To Order or Order Online At Nordgearmotors.com



# Gear Unit Options



## Inputs

NORD's modular design allows for many different types of inputs to be added to gear reducers. All inputs are bolt on and include machined pilots to ensure simple and accurate assembly. NORD offers the following different input types:

- Integral motor
- Solid input shaft
- NEMA C-Face motor adapter
- IEC B5 motor adapter
- Servo motor adapter
- Top mount motor platform
- Scoop mount motor platform
- Custom mounting interface

For more information on the inputs see the input section pages 673 - 687.

## Mounting

NORD offers a number of different mounting arrangements including:

- Foot (X)
- B5 flange (F)
- B14 flange (Z)
- Shaft mount (A)
- Foot and B5 flange (XF)
- Foot and B14 Flange (XZ)

### Foot Mounted (Blank or X)

Foot or base mounting is the most common method of reducer mounting. The speed reducer is secured in place with bolts or studs to a mounting base. Most often the reducer has mounting feet with through holes.

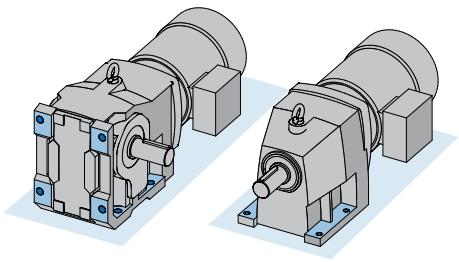

### B5 Flange (F)

A B5 flange provides a simple, large diameter mounting flange with clearance holes and a centering pilot to firmly secure the speed reducer to the application. The B5 flange utilizes standard metric dimensions and is available for all NORD reducers. Many reducers offer a number of B5 flange diameters.

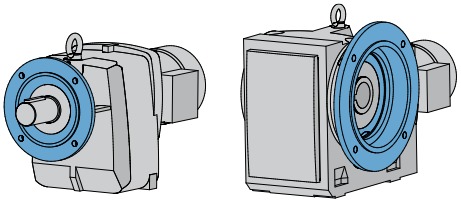

### B5 Flange Pilot Removal (PR)

B5 flanges have a centering pilot machined onto the flange. In cases where there is not a matching counter bore or when the flange must sit flush to the mounting surface then the centering pilot must be removed. This pilotless flange is used to firmly secure the speed reducer to the application.

In some cases the matching surface already has a centering pilot and the use of a female pilot (counter bored flange surface) is recommended. Counter rotating drives are an example where a female pilot is frequently used.

### B14 Flange (Z)

The NORD B14 flange consists of threaded holes and a centering pilot machined into the reducer housing. It is commonly used to secure the reducer to the application machine base or to mount many bolt on components such as a B5 flange, torque arm, or shaft cover. The B14 flange uses standard metric dimensions and allows a compact method of securing the reducer. This option is standard on all Clincher™ units and is available on all other NORD reducers.

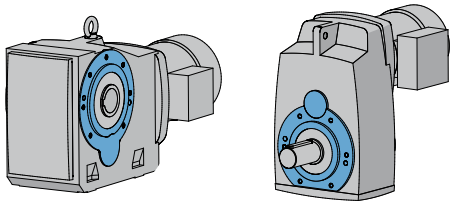


Send Quote Requests to info@automatedpt.com
Call +1(800)985-6929 To Order or Order Online At Nordgearmotors.com

Send Quote Requests to info@automatedpt.com Call +1(800)985-6929 To Order or Order Online At Nordgearmotors.com



### Foot Mounted with B5 Flange (XF)

NORD can supply some foot mounted reducers with a B5 flange as well. These type XF reducers are designed to be foot and not flange mounted. The B5 flange is normally used to mount auxiliary equipment to the speed reducer. If the B5 flange is going to be used to mount the reducer, additional support will normally be required.

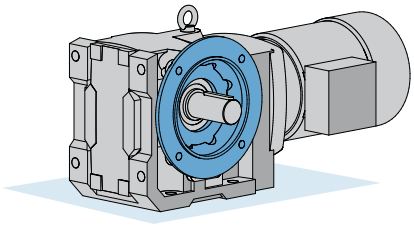

### Foot mounted with B14 Face Flange (XZ)

NORD can supply some foot mounted reducers with a B14 face flange as well. These type XZ reducers are designed to be foot and not flange mounted. The B14 face flange is normally used to mount auxiliary equipment to the speed reducer. If the B14 face flange is going to be use to mount the reducer, additional support will normally be required.

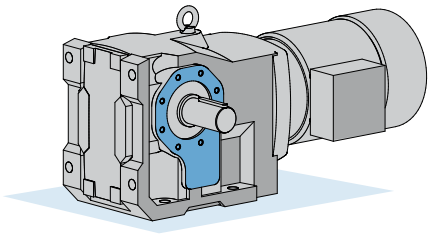

## Shaft Options

### Solid Shaft (Blank or V)

NORD's standard keyed solid shafts include a centered threaded hole. Shafts are available as inch or metric versions. The standard shaft material is 1045 or 4140 or equivalent.

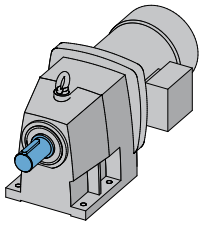

### Double Solid Shaft (L)

The standard solid shaft end is projected out both sides of the speed reducer. This option is commonly used to transfer torque out of both sides of the reducer or to mount a speed-monitoring device such as an encoder on one of the shaft ends. If you need the keyways to be alligned you must specify with NORD upon ordering

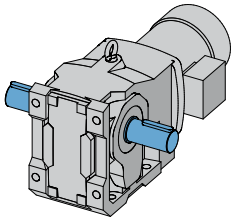

### Keyed Hollow Shaft (A)

NORD's standard keyed hollow shafts are made from SAE 1045 high carbon steel. They feature standard keyway dimensions and are available both inch and metric designs. Many NORD reducers offer a variety of hollow shaft diameters.

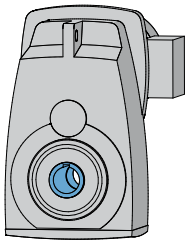

### Shrink Disc (S) (SH)

The shrink disc relies on the proven wedge principle to create a keyless, mechanical interference fit by converting locking screw tension into radial contact pressure on shaft and hub in effect "shrinking" it on to the customer shaft. Shrink discs result in a zero backlash mechanical interference fit that can accommodate high torque unlike other mounting technologies and will never wear or pound out, even for high cycle fluctuating and reversing loads.

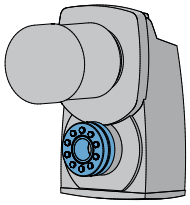

Other shrink disc advantages include:

- Elimination of fretting corrosion associated with key connections.
- Generous clearance for easy mounting & dismounting.
- Allow for larger bores sizes compared to keyed hollow shafts.
- For more information see page 72

### Heavy Duty Shrink Disc (VS)

NORD heavy duty shrink discs offer increased clamping force and safety factor for severe applications.

## Special Shafts & Shaft Materials

### Stainless Steel Output Shaft (SM5)

Output shafts made from stainless steel are available and are frequently used in food, pharmaceutical, and washdown applications. In some cases solid input shafts can also be provided in stainless.

### Special Solid Shaft (SWV)

Special solid shaft diameters and lengths can be provided for a nominal price adder. Special features are also available including keyless shafts, cross drilled shafts or special threaded taps. Different shaft materials are also available. NORD has in-house drafting design and machining departments so we can provide special requirements in short lead times. Specify your shaft requirements and NORD will verify the design feasibility.



Send Quote Requests to info@automatedpt.com
Call +1(800)985-6929 To Order or Order Online At Nordgearmotors.com

Send Quote Requests to info@automatedpt.com
Call +1(800)985-6929 To Order or Order Online At Nordgearmotors.com



# Gear Unit Options



### Special Hollow Shaft (SWA)

Special hollow bore shafts can also be provided. Special hollow bore shafts can be provided with special diameters, multiple keyways, and even special extended hollow shafts that are frequently used with counter rotating drives. Different shaft materials are also available. Specify your shaft requirements and NORD will verify the design feasibility.

### Hollow Shaft with Spline (EA)

Hollow shafts with a metric involute spline profile according to DIN 5480 are available for some NORD hollow shaft reducers. These spline shafts are commonly used on crane travel drives. See pages 573 & 671 for details.

### Heavy Duty Output Bearings (VL)

Replacing standard output bearings with heavy-duty versions will increase the external load carrying capacityof the speed reducer. Increased capacity in either or both overhung (radial) or thrust (axial) loading insures that premature bearing failure will not occur due to high stresses in the bearing elements. The increased bearing capacity will also keep the speed reducer as small as possible by not having to select the next larger case size in order to handle the bearing loads. If increased bearing life is desired, larger bearings will reduce the relative stress on the bearings and increased B10 bearing life.

### (FKM) Fluoro-rubber Seals (VI)

TheNORDstandardoilsealsaremadeofNitrileorrubber and are rated for temperatures up to 125°C or 250°F. If ambient or oil temperatures rise above this level NORD recommends using fluoro-rubber (also called FKM) oil seals. FKM seals are rated from -30°F to 400°F (-35°C to 200°C).

### Torque Arm (D)

A torque arm is a compact, simple way to secure a shaft mounted reducer. It is bolted onto the reducers B14 flange. The tear drop shaped torque arm has a rubber bushing located at the fastening hole-end to act as a shock absorber to dampen out peak shock loads.

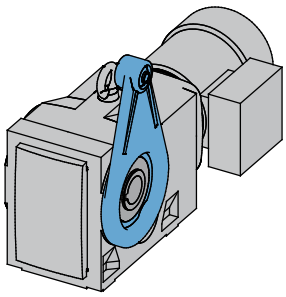

**Specify the torque arm location and orientation when ordering**

| Torque arm location |
|---|
| Torque arm orientation |
| See Page 18 for details |

### Bottom Mount Torque Arm (K)

A torque arm is a compact, simple way to secure a shaft mounted reducer. It is bolted onto the base of the reducer. The torque tab has a rubber bushing located at the fastening hole-end to act as a shock absorber to dampen out peak shock loads.The torque tab is available for bevel units SK 90.1.

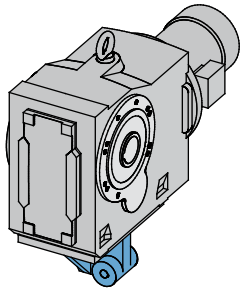

**Specify the torque tab location when ordering**

| Torque tab location |
|---|
| See Page 18 for details |


Send Quote Requests to info@automatedpt.com
Call +1(800)985-6929 To Order or Order Online At Nordgearmotors.com

Send Quote Requests to info@automatedpt.com
Call +1(800)985-6929 To Order or Order Online At Nordgearmotors.com



## Rubber Buffers (G)

Two rubber buffers are installed on the integral torque tab located on the Clincher™ & on the torque bracket of the larger Bevel units to dampen torsional shock loads delivered to the reducer. The use of rubber buffers can increase the reducer's service life by reducing cumulative torsional shock loads. For further dampening, several rubber buffers may be used in a row. For dimensions see page 387.

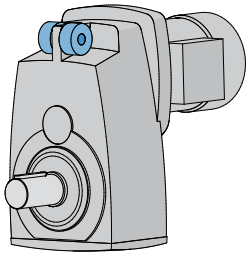

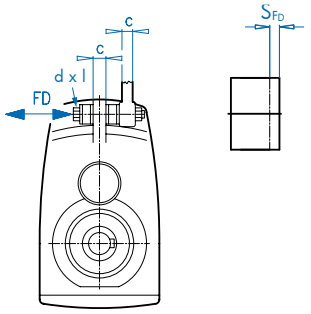


**FD** = Force working on the rubber buffer [lb]
**d x l** = Diameter x length
**c** = Thickness
$\mathbf{S_{FD}}$ = Distance buffers compress at force (FD)

**CAUTIONS**

When installing, rubber buffers should be tightened until free play between the contact surface is eliminated.

## Heavy Duty Rubber Buffers (VG)

Heavy duty rubber buffers are also available on Clincher™ reducer sizes SK7282 to SK12383. These heavy duty buffers provide the same benefits as the standard "G" buffers but are usable in more severe shock applications.

**CAUTIONS**

When installing, rubber buffers should be tightened until free play between the contact surface is eliminated.

## Hollow Shaft Cover (H)

An optional cover can be used to guard from rotating hollow output shafts. It also protects the output shaft seals against dust and dirt particles and in some cases can be sealed against moisture and dust.

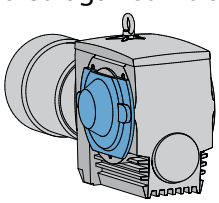

## Shrink Disc Cover (SH)

The shrink disc cover is required with all shrink disc units and provides protection from the rotating shrink disc.

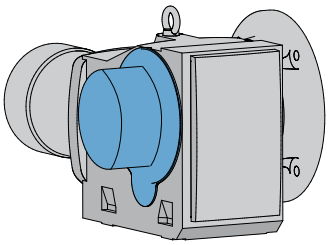

## IP66 Hollow Shaft Cover (H66)

NORD provides hollow shaft covers with IP66 enclosure protection (protection against dust and water jets) to completely seal the rotating hollow shaft from moisture and debris.

**NOTE: Cover location is required for 90 series bevel units**

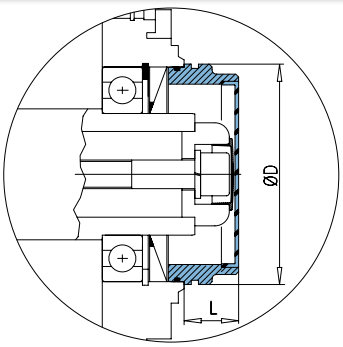


## Fixing Element Kit (B) (shaft shoulder fixed and snap ring fixed)

Due to the slight oscillations inherent in any rotating shaft, NORD offers an optional "fixing element kit". This is a method to prevent the reducer from "walking out" of position. The kit includes all necessary parts to secure the shaft in the axial direction by using a tapped hole in the end of the mating male shaft.

There are two methods for securing the fixing element kit. The first involves pulling the customer supplied male shaft to the snap ring (type 1) and the second method the customer supplied shaft is shouldered (type 2) and pulled against the hollow shaft and not the snap ring.

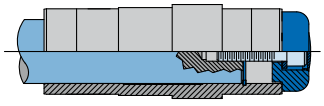

Snap Ring Fixed (Type 1)

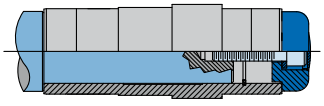

Shaft Shoulder Fixed (Type 2)



Send Quote Requests to info@automatedpt.com
Call +1(800)985-6929 To Order or Order Online At Nordgearmotors.com

# Gear Unit Options

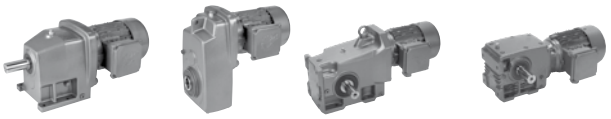

## Backstop (R)

The anti-rotation backstop only allows rotation in one direction. NORD's backstop is installed internally to the reducer and will hold the speed reducer's rated torque.

The 90 series bevels can be built with internal backstops. Additionally, units with W-input cylinders and NORD motors frame size 80 and larger offer integral backstops.

The direction of rotation is required when ordering a unit with a backstop. Please reference the drawings below.

**Specify the direction of allowable rotation when ordering.**

**Clockwise (CW) or Counter-Clockwise (CCW) _____**

Right-angle units viewed from side A or side B.

Backstop illustrations

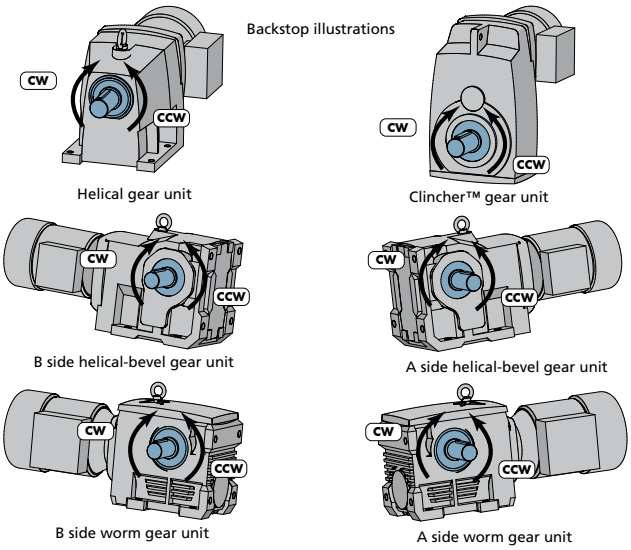


**WARNING**

When a gear unit or a motor includes a backstop, check the motor and gear direction of rotations before starting the system. Attempting to operate the unit in the wrong direction may cause damage.

## Clincher with B14 on motor side

As an option, Clincher™ reducers can be supplied with an additional B14 flange on the motor side.

## Oil Expansion Chamber (OA)

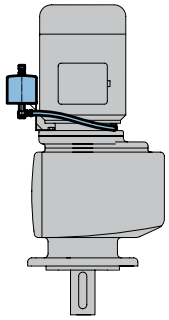

Oil expansion chambers are available for most reducers. These chambers allow for expansion of the oil-air mix in the reducer that can occur during operation. This expansion chamber is similar to a car radiator over-flow chamber. See page 39 for additional details and selection guidelines.

## Oil Reservoir Tank (OT)

The oil reservoir tank allows the reducer housing to be completely filled with oil. The tank always contains oil and is above the reducer oil sump, which allows the reducer to be completely filled with oil. See page 40 for additional details and selection guidelines.

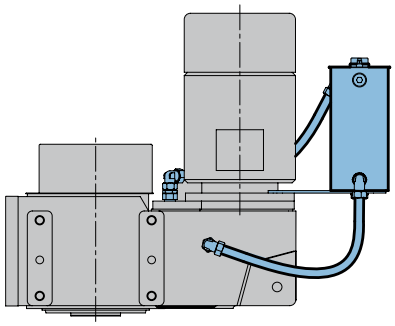

## Oil Cooler (OC)

The cooler is an external device to cool the reducer's lubricating oil. In some applications it is necessary to provide oil coiling to ensure the oils maximum operating temperature is not exceeded. See page 41 for additional details and selection guidelines.

## Water Cooling Cover (WC)

A water cooling plate is an alterative to an oil cooler in some situations. The larger Clincher™ and Bevel units can be fitted with a water cooling plate to cool the reducer's oil reservoir. See page 40 for additional details and selection guidelines.


Send Quote Requests to info@automatedpt.com
Call +1(800)985-6929 To Order or Order Online At Nordgearmotors.com

Send Quote Requests to info@automatedpt.com
Call +1(800)985-6929 To Order or Order Online At Nordgearmotors.com



## VL2 – Spread Bearing Design

NORD offers reinforced output shaft bearings with increased bearing distance. The lower bearing is a oversized, double row spherical bearing, which absorbs high overhung and thrust loads while providing a longer bearing service life. The spherical roller bearing is especially useful in compensating for alignment errors in long agitator shafts. The VL2 spread bearing design is commonly used for shredders, mixers, overhead conveyors or applications requiring increased bearing load carrying capacities. Included with the VL2 design is a grease fitting for the lower bearing and a removable plug to allow excess grease to purge from the bearing cavity.

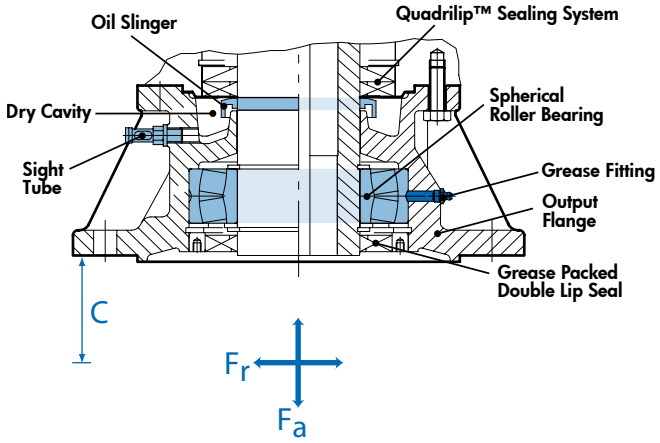


## VL3 – Spread Bearing Design with Oil Safe Dry Cavity

The VL3 dry cavity design adds additional oil leak protective measures to the VL2 spread bearing design. NORD's Quadralip™ sealing system prevents oil from leaking from the gearbox into the VL2 flange. If in any case oil does leak past the Quadralip™ seals, it would flow down to the oil slinger mounted onto the shaft. As the shaft rotates, the oil will sling off into the dry cavity. A sight tube is provided for dry cavity inspection. At the bottom of the spread bearing flange is greased packed, double lip seal.

NORD can calculate the service life upon request. The following values are required for calculation:

| | | |
|---|---|---|
| • Rated Power | **P** | [hp] |
| • Output Speed | **$n_2$** | [rpm] |
| • Overhung Force | **$F_r$** | [lb] |
| • Axial Force (thrust) | **$F_a$** | [lb] |
| • Distance from the point of overhung force to the flange support | **C** | [in] |
| • Required Service Life | **$L_h$** | [h] |

### Clincher™ Shaft Mount Gear Unit Motors

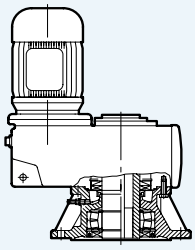

**SK ..82 AF VL2**
**SK ..82 AF VL3** in ⇨ 384

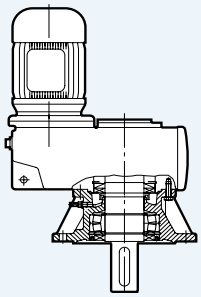

**SK ..82 VF VL2**
**SK ..82 VF VL3** in ⇨ 385

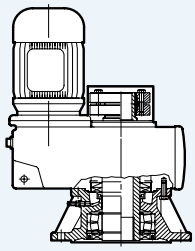

**SK ..82 AFSH VL2**
**SK ..82 AFSH VL3** in ⇨ 386

### Helical-Bevel Gear Unit Motors

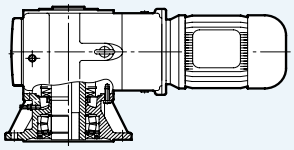

**SK 90..1 AF VL2**
**SK 90..1 AF VL3** in ⇨ 562

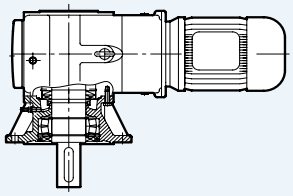

**SK 90..1 VF VL2**
**SK 90..1 VF VL3** in ⇨ 563

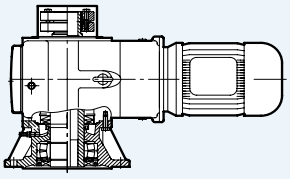

**SK 90.1 AFSH VL2**
**SK 90.1 AFSH VL3** in ⇨ 564



Send Quote Requests to info@automatedpt.com
Call +1(800)985-6929 To Order or Order Online At Nordgearmotors.com

Send Quote Requests to info@automatedpt.com
Call +1(800)985-6929 To Order or Order Online At Nordgearmotors.com



# Gear Unit Options

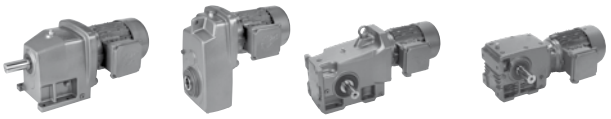

## Drywell with Heavy Duty Drop Bearings VL4

NORD offers a high capacity drop bearing drywell units in our Clincher™ offset parallel and right-angle helical-bevel. These True Drywell designs provide the high capacity bearings design of the VL2/VL3 units together with a drywell design.

## Drywell Design

A drywell design isolates the low-speed output shaft from the gear unit's oil sump to prevent oil sump lubricant from leaking thought the output area. A drywell design physically separated the oil sump lubrication form the rotating output shaft.

## NORD's Superior Drywell

NORD's stationary oil dam tube extends vertically above the top of the gear unit housing. Most other drywell designs simply have a small oil dam tube inside the gear unit's slightly above the oil sump level. NORD's drywell design provides a much higher degree of leak safety. Additionally NORD provides a sealing o-ring at the top of the oil dam for maximum protection.

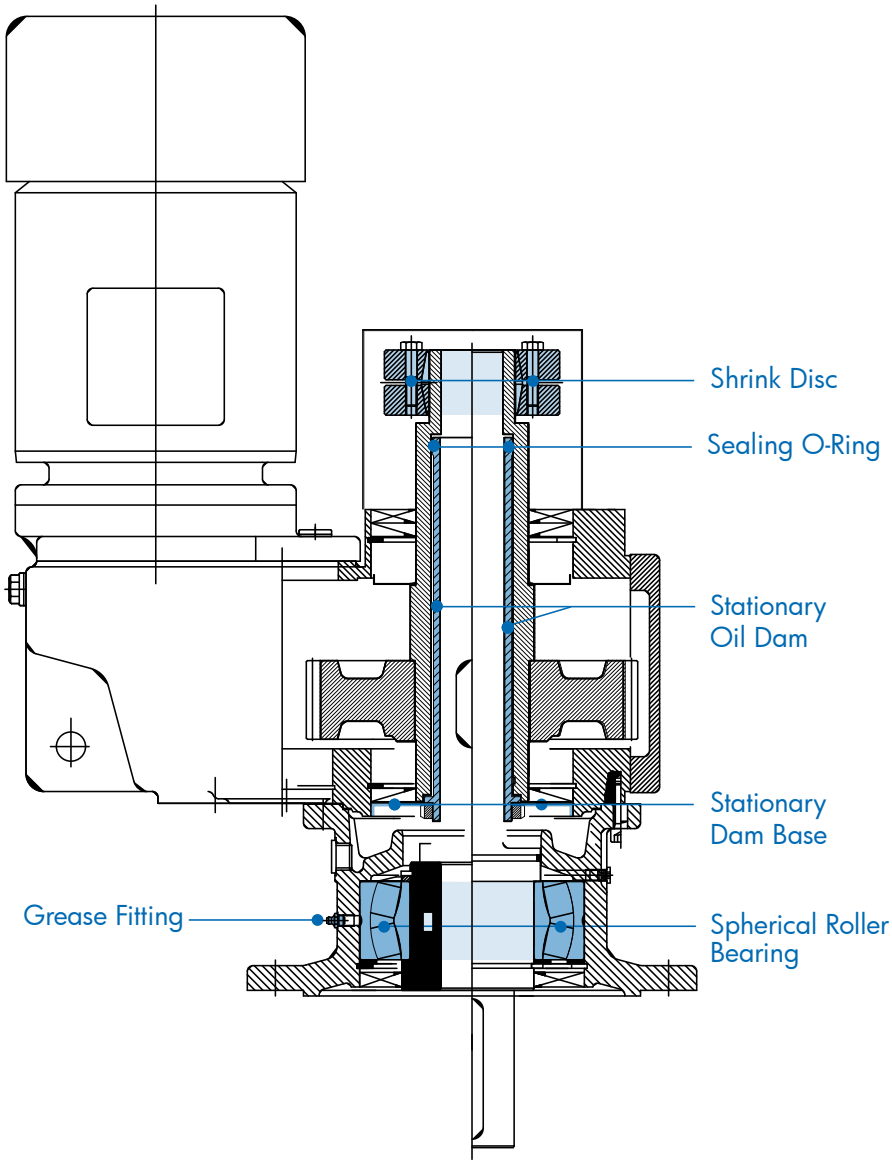


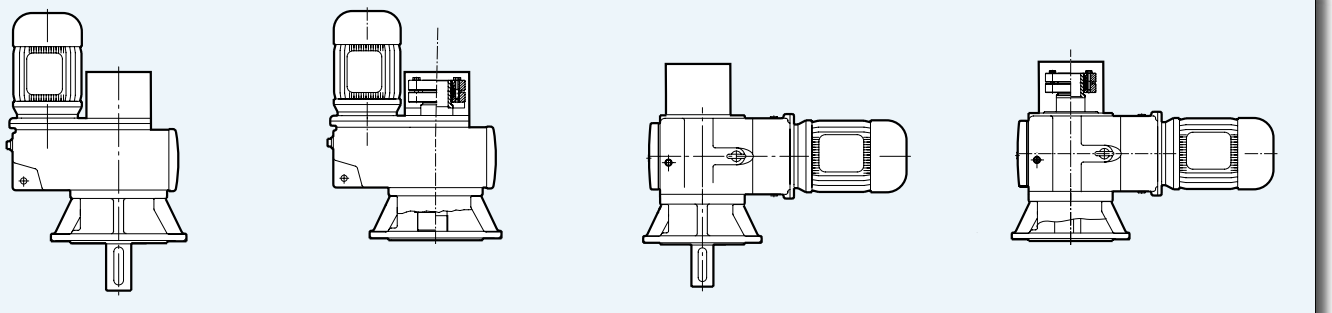

SK ..82 VF VL4 | SK ..82 AFSH VL4 | SK 90..1 VF VL4 | SK 90.1 AFSH VL4


Send Quote Requests to info@automatedpt.com
Call +1(800)985-6929 To Order or Order Online At Nordgearmotors.com

Send Quote Requests to info@automatedpt.com Call +1(800)985-6929 To Order or Order Online At Nordgearmotors.com



## Oil Sight Glass (OSG)

The oil sight glass provides a visible oil level indication on the reducer. The sight glass replaces the standard steel fill plug and consists of a sealed clear porthole centered in the middle of a brass plug. The sight glass allows for quick oil level and color inspection.

## Autovent™ (DR)

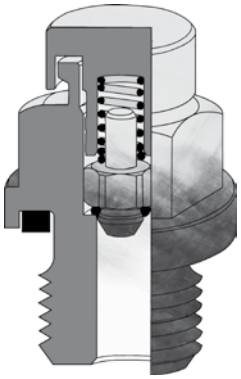

The AUTOVENT™ helps prevent bearing and gear damage by behaving like a check valve to block the entry of foreign material and prevent lubrication contamination from dust particles, moisture and air-borne process chemicals. The breather opens at approximately 0.3-0.9 psi during operation and closes tightly as the gearbox cools. This option is perfect for humid conditions and wash-down environments, helping to maintain proper oil cleanliness, while reducing foaming and oxidation.

## Open Vent (OV)

An open vent can be optionally supplied on NORD reducers. The open vent allows for air pressure differences between the inner space of the reducer and the atmosphere. This open vent will be closed upon delivery to prevent oil leakage. Before the reducer is put in service the open vent should be activated by removing the sealing plug.

## Filtered Vent (FV)

NORD offers a filtered vent, which allows gases to permeate, but does not allow dust and debris to pass through the vent.

## Magnetic Drain Plug (MDP)

Magnetic drain plugs attract and hold ferrous metal particles that may circulate inside the reducer's lubrication system. These potentially abrasive particles may cause excessive wear in the reducer if they remain circulating. An increase of collected material may be a warning sign of future problems.

## Special Drain Plugs



NORD oil drain valves are offered to make draining the oil from the gearbox clean and easy. The drain hose needs to be supplied by the customer. The hose fittings are offered in either 90° or straight to accommodate the user.

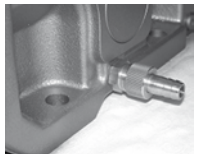

A brass drain valve is threaded into the existing oil drain port of the gearbox. The spring valve is closed using a rubber o-ring. When the hose fitting is threaded into the drain valve, the spring valve is pushed open and allows oil to drain. When the hose fitting is removed, the drain valve closes. A brass, threaded cap is supplied to cover the drain valve when not in use.

## Additional Drain Plug Hole (ADP)

NORD can add an additional drain hole to the reducer housing for a small surcharge if required for special oil plumbing needs.

## Long Term Storage (LL)

Speed reducers are frequently put in storage prior to installation for long periods of time and in some cases exposed to the elements. NORD's long term storage option protects the unit from moisture or corrosion by coating all unpainted surfaces with a dry, transparent, durable waxy film. Once installation is necessary this waxy film can be easily removed with a commercial de-greaser or petroleum solvent. If possible the store room should be vented and dry, with room temperatures between 23°F and 104 °F (-5 °C and 40 °C).



Send Quote Requests to info@automatedpt.com
Call +1(800)985-6929 To Order or Order Online At Nordgearmotors.com

# Gear Unit Options



## Paint Coatings

NORD's standard paint coating is a two component, aliphatic polyurethane finish contaning 316 stainless steel material.This gray stainless steel paint has excellent appearance and outstanding physical properties. It is suitable for both indoor and outdoor applications.

Advantages of NORD's stainless steel two component polyurethane:

- Excellent adhesion to cast iron, aluminum, steel, and plastics
- Excellent corrosion resistance
- Excellent chemical resistance
- Excellent gloss and color retention
- Suitable for indoor and outdoor exposure
- Nonporous and excellent abrasion resistance
- Suitable for use in a USDA inspected facility

NORD also offers a variety of severe duty paint coatings that provide a high level of protection against water and severe environments both indoors and outdoors. NSD+ (NORD Severe Duty) consists of a primer undercoat and a stainless steel polyurethane topcoat. For the most demanding environments, NORD offers NSD-X3 (NORD Severe Duty triple coated) which consists of a primer undercoat, stainless steel polyurethane coating, and a clear topcoat. Paint coatings are also available in alternate colors as seen in the table below.

Additionally a variety of coating options are available including our Severe Duty coatings:

| Finish | Color | Coating | Use |
|---|---|---|---|
| Standard (stainless steel paint) | Stainless steel silver (Gray) | 1 x Stainless steel (316) top coat (polyurethane) | Indoor or outdoor moderate environment |
| Alternate color | Black, Blue, Red, Orange | 1 x Color top coat (polyurethane) | Indoor or outdoor protected |
| **NSD+** | | | |
| NORD Severe Duty + NSD+ | Stainless steel silver (Gray) | 1 x Primer high solid alkyd system<br>1 x Stainless steel (316) top coat (polyurethane) | Indoor or outdoor moderate environment |
| NORD Severe Duty +W NSD+W | White | 1 x Primer high solid alkyd system<br>1 x White top coat (polyurethane) | Indoor or outdoor moderate environment |
| Alternate color NSD+ | Black, Blue, Red, Orange | 1 x Primer high solid alkyd system<br>1 x Color top coat (polyurethane) | Indoor or outdoor moderate environment |
| **NSD X3** | | | |
| NORD Severe Duty Extreme NSD-X3 | Stainless steel silver (Gray) | 1 x Primer high solid alkyd system<br>1 x Stainless steel (316) (polyurethane)<br>1 x Clear top coat (polyurethane) | Indoor or outdoor more severe environment |
| NORD Severe Duty Extreme NSD-X3W | White | 1 x Primer high solid alkyd system<br>1 x White (polyurethane)<br>1 x Clear top coat (polyurethane) | Indoor or outdoor more severe environment |
| Alternate color NSD-X3 | Black, Blue, Red, Orange | 1 x Primer high solid alkyd system<br>1 x Color (polyurethane)<br>1 x Clear top coat (polyurethane) | Indoor or outdoor more severe environment |

Special colors and paints possible please contact NORD with your specific requirements.


Send Quote Requests to info@automatedpt.com
Call +1(800)985-6929 To Order or Order Online At Nordgearmotors.com

Send Quote Requests to info@automatedpt.com Call +1(800)985-6929 To Order or Order Online At Nordgearmotors.com



## Clincher™ Screw Conveyor Package (SCP)

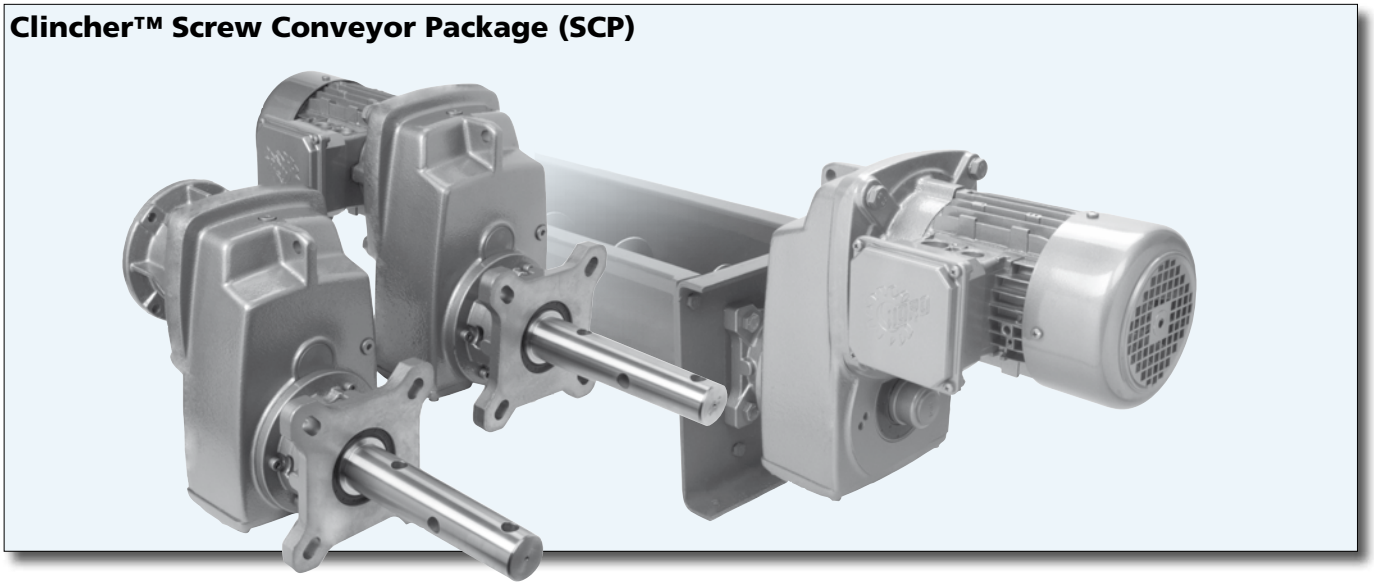

### Screw Conveyor Package (SCP)

The NORD screw conveyor package (SCP) provides a complete power transmission for screw conveyors. It is extremely efficient due to the elimination of costly v-belt drives and by providing integral gearmotors or direct coupled motors to a NEMA C-face reducer. Efficiency can be increased even further by applying the NORD "H" line of energy efficient motors. The SCP package also features a superior sealing system and mounting features.

For more information see our G1129 catalog.

### Optimized Sealing System

- Dual (FKM) lip seals
- Grease impregnated packing seal
- Dual gap seals (excludes particles) – 0.03" gap
- Material evacuation ports
- Shaft material ditch
- Quadrilip™ sealing

### Mounting

- Standard CEMA mounting
- Versatile flange – multiple bolt patterns
- 3-Hole tapered CEMA drive shaft
  - Easy mounting & Removal
- Reduced bearing loads – tapered shaft allows for screw pipe misalignment
- Quick external removal feature

| Model type | Max Torque | Ratio Range | Speed Range | Gear Stages | Eff. | CEMA Drive Shaft Diameter | | | | |
|---|---|---|---|---|---|---|---|---|---|---|
| | [lb-in] | [x:1] | [rpm] | | [%] | 1-1/2" | 2" | 2-7/16" | 3" | 3-7/16" |
| **SK1282SCP** | 2620 | 4.79 - 109.5 | 365 - 16 | 2 | 97 | X | X | X | | |
| **SK1382SCP** | 2425 | 87.94 - 624.45 | 20 - 2.8 | 3 | 95 | X | X | X | | |
| **SK2282SCP** | 4611 | 4.51 - 127.51 | 388 - 14 | 2 | 97 | X | X | X | | |
| **SK2382SCP** | 4894 | 82.22 - 763.41 | 21 - 2.3 | 3 | 95 | X | X | X | | |
| **SK3282SCP** | 8363 | 4.48 - 112.23 | 391 - 16 | 2 | 97 | X | X | X | X | |
| **SK3382SCP** | 9195 | 89.60 - 1022.42 | 20 - 1.7 | 3 | 95 | X | X | X | X | |
| **SK4282SCP** | 16089 | 4.7 - 155.4 | 372 - 11 | 2 | 97 | | X | X | X | |
| **SK4382SCP** | 18381 | 86.83 - 1585.08 | 20 - 1.1 | 3 | 95 | | X | X | X | |
| **SK5282SCP** | 28630 | 4.32 - 134.03 | 405 - 13 | 2 | 97 | | X | X | X | X |
| **SK5382SCP** | 28320 | 82.72 - 1367.08 | 21 - 1.3 | 3 | 95 | | X | X | X | X |
| **SK6282SCP** | 40152 | 4.39 - 80.33 | 399 - 22 | 2 | 97 | | | | X | X |
| **SK6382SCP** | 53100 | 24.42 - 551.58 | 72 - 3.2 | 3 | 95 | | | | X | X |



Send Quote Requests to info@automatedpt.com
Call +1(800)985-6929 To Order or Order Online At Nordgearmotors.com

# Gear Unit Options



## Overhead Conveyor Drives

The NORD SK9055 and SK9155 Conveyor Drive reducers are designed to be a mounting flange and output shaft drop-in for existing Overhead Conveyor Drives. The NORD Conveyor Drives, like our standard industrial products, offer heavy-duty construction and precisely machined components. By adding a mounting pad, the standard NORD unit becomes an intelligent drop-in product.

Conveyor drives incorporate the standard NORD VL3 flange, which features a spread bearing design with oil safe dry cavity.



### Ratings

NORD uses the standard gearing and housings for these Conveyor Drives. By doing this, we are able to offer the wide range of ratios, high torque, overhung and thrust load capacities.

### Power Input

Conveyor drives are able to accept different types of power inputs, including integral or C-face motors and solid input shafts.

For more information see our G1043 catalog.

| Unit Size | Integral Motor Range | C-Face Motor Range | Ratio | Max Torque [lb-in] | Overhung Load [lb] | Thrust Load [lb] |
|---|---|---|---|---|---|---|
| **SK9055** | 0.33hp – 30hp | 56C – 250TC | 8.83 – 4246.38 | 24780 | 6000 | 3000 |
| **SK9155** | 0.75hp – 60hp | 56C – 360TC | 8.66 – 4319.55 | 72570 | 16000 | 5000 |

## Spread Bearing Design with Oil Safe Dry Cavity

The dry cavity design adds additional oil leak protective measures to the spread bearing design. NORD's Quadralip™ sealing system prevents oil from leaking from the gearbox into the flange. If in any case oil does leak past the Quadralip™ seals, it would flow down to the oil slinger mounted onto the shaft. As the shaft rotates, the oil will sling off into the dry cavity. A sight tube is provided for dry cavity inspection. At the bottom of the spread bearing flange is greased packed, double lip seal.

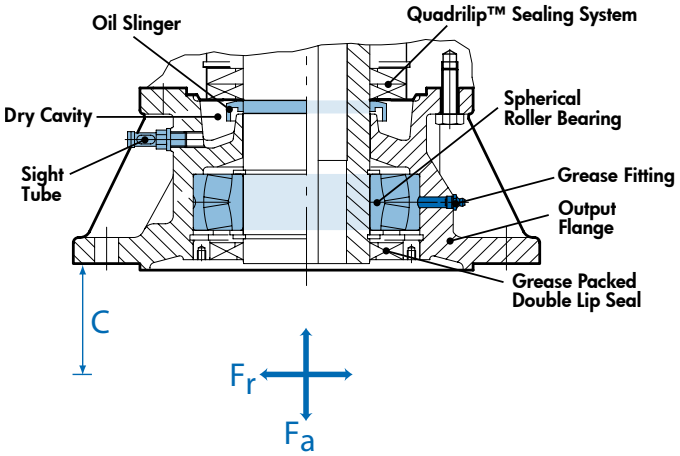




Send Quote Requests to info@automatedpt.com
Call +1(800)985-6929 To Order or Order Online At Nordgearmotors.com

Send Quote Requests to info@automatedpt.com
Call +1(800)985-6929 To Order or Order Online At Nordgearmotors.com



## Counter Rotating Drives

Often mixing tanks use a dual agitation system. For example, a scraper blade rotates in one direction along the sides and bottom, while a turbine blade rotates in the opposite direction in the middle of the tank.

Nord can provide an economical, compact drive system to perform this function. A standard hollow bore reducer is used as the top drive that rotates the turbine. This drive may have a standard B5 output flange slightly modified to fit the mating B14 flange on the bottom reducer. Or, in some cases, it may be necessary to use an adapter plate between the two units in order to match the flanges. The top drive can be any hollow bore reducer, such as a helical shaft mount, a helical-bevel, or a helical-worm reducer.

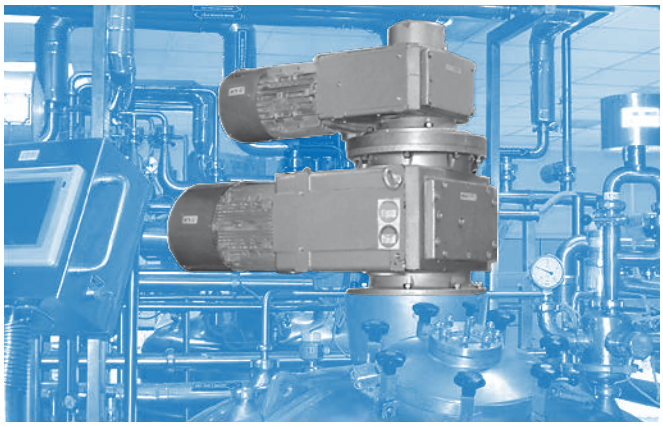

For stacked-mixer applications, a bore differential between the two units is essential. Thus, it is necessary to have a larger diameter on the lower unit and a smaller diameter on the upper unit. Nord can provide the upper unit with a smaller bore by using an "AXF" style bevel. Likewise, Nord can supply a larger alternate bore on several of the "AZ" or "AF" style bevels for the lower unit.

If the bore differential is still not sufficient when using an "AXF" on top with a larger bore on bottom, Nord can provide a special hollow shaft for the lower gearbox. This shaft has no inner keyway. The shaft extends below the gearbox and has an outer keyway onto which the customer can mount a coupling. This shaft is similar to a solid shaft except that it has a hollow bore running through it.

Since the mixer components usually require final positioning adjustment, Nord units can be supplied with a keyless shrink disc attachment on the upper unit. This method allows for easy installation and adjustment. It also greatly facilitates disassembly and eliminates fretting corrosion.

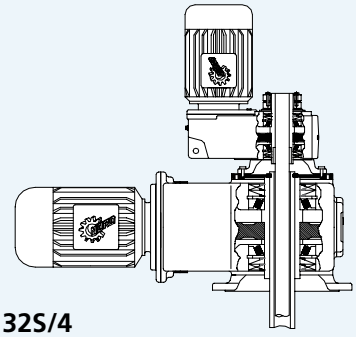

**SK5282AFSH-132S/4**
**+ SK9082.1AF-160M/4**

- Flange used on bottom of lower gearbox (optional).
- Adapter plate needed between gearboxes.
- Shrink disc on top gearbox
- Taper bearings on top gearbox

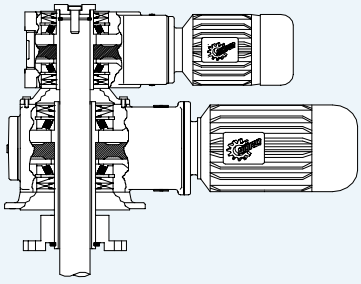

**SK9052.1AXF-160M/4 (top)**
**+ SK9072.1AF-132M/4 (bottom)**

- Flange used on bottom of lower gearbox (optional).
- No adapter plate needed between gearboxes.
- Taper bearings standard on both units.
- Special extended hollow shaft with externally mounted coupling.


Send Quote Requests to info@automatedpt.com
Call +1(800)985-6929 To Order or Order Online At Nordgearmotors.com

Send Quote Requests to info@automatedpt.com Call +1(800)985-6929 To Order or Order Online At Nordgearmotors.com



# ATEX Information

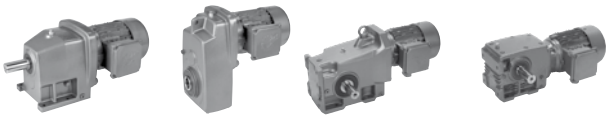

## ATEX Explosion Protection for the European Union

The term ATEX is derived from an old French directive titled "ATmospheres EXplosives" and is used to help protect people and equipment from potential explosive hazards. Explosive environments are usually the product of oxygen mixing with ignitable gases or airborne or settled ignitable dust. Gear drive systems may operate in areas with potentially explosive gas-air and dust-air mixtures; therefore NORD manufactures drive systems with special explosion protection to safely operate in these potentially dangerous environments.

Integrated explosion protection indicates measures should be taken to:

- Prevent the development of potentially explosive environments
- Avoiding ignition of potentially explosive environments
- Limit the impact of an explosion to safe confines

In 1994 the European Parliament issued EU directive 94/9/EC commonly called the "equipment or product directive", which regulates the legal requirements for equipment and protective systems intended for use in potentially explosive environments. Another directive was also created called the "worker protection directive" 1999/92/EC to protect workers and workplace property.

### Product Directive 94/9/EC

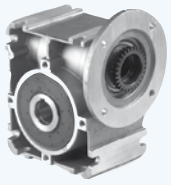

Defines the equipment and certification requirements of the equipment builder. Specifically equipment builders are required to label their products by categories according to ignition risks in a potentially explosive environment.

### Workers Protection Directive 1999/92/EC

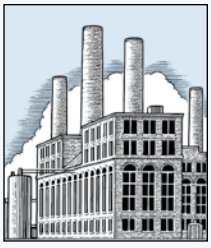

Defines the duties of the end user. Specifically the end user has to specify hazardus areas within a plant or property called zones.

Some of the basic safety requirements met by this standard are listed below

**Standards for electrical equipment:**

- DIN EN 60079-0 General Requirements
- DIN EN 60079-1 Flameproof enclosure "d"
- DIN EN 60079-7 Increased safety "e"
- DIN EN 60079-15 Non-sparking "n"
- DIN EN 50281 Combustible dust

**Standards for mechanical equipment:**

- EN 13463 Series of standards
- EN 13463-1 Basic method
- EN13463-5 Constructional safety

## Comparison between ATEX and North American Explosion Protection

ATEX directive 94/9/EC for explosion proof application is a mandatory requirement throughout the European Union and many other countries have adopted the directive as well. The ATEX directive is not required for North American installations, which use the Class/Division standard set by NEC/CEC.

The two systems are not easily compared since they were developed independently, but they both have been proven to be effective safety systems for use in hazardous areas. The Class/Division system is more straightforward by leaving little interpretation to the classification and which electrical materials can and cannot be used. The ATEX method allows for more application solutions because equipment is marked by its protection type and the user bears the responsibility to apply the proper equipment protection in each zone. ATEX also requires mechanical component protection like gear units, where the Class/Division system does not.


Send Quote Requests to info@automatedpt.com
Call +1(800)985-6929 To Order or Order Online At Nordgearmotors.com

Send Quote Requests to info@automatedpt.com Call +1(800)985-6929 To Order or Order Online At Nordgearmotors.com



## ATEX Definitions

### Group

The ATEX directive distinguishes between two equipments groups. Group I applies to equipment intended for use in mines and Group II applies to all other areas or the surface industry. NORD offers drives for Group II.

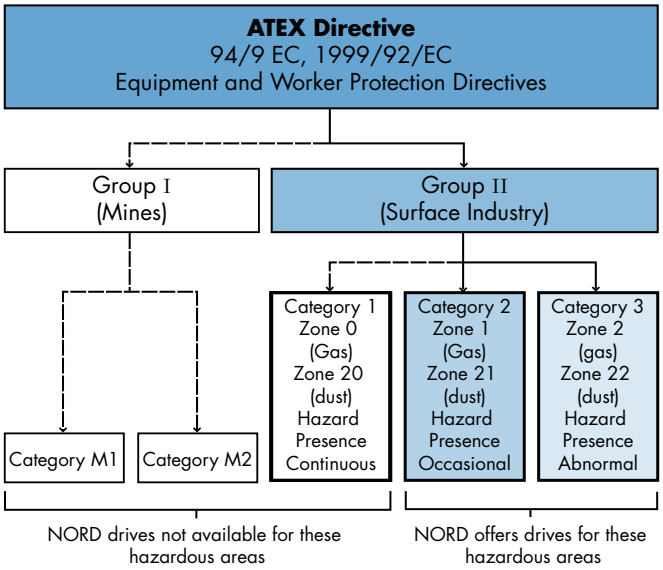


### Category

The equipment category distinguishes the level of equipment protection needed and if the protection is for gas-air or dust-air mixtures. ATEX distinguishes three category levels; 1, 2 and 3 based upon the duration of exposure to a potentially explosive atmosphere with category 1 being the most dangerous.

Following the category number is a letter G for gas or D for dust. If dust-air hazards are present, the dust must be classified as electrically conductive or electrically non-conductive. NORD offers drives for categories 2G, 2D, 3G and 3D for both conductive and non-conductive dust areas.

### Zones

ATEX guideline 1999/92/EC requires plant operators and approved authorities to classify places at the workplace where explosive atmospheres may occur into hazardous or non-hazardous areas. Hazardous areas are further divided into zones. Atmospheres with gas-air mixtures are divided into zones 0, 1, and 2 with zone 0 being the most hazardous. Atmospheres with dust-air mixtures are divided into zones 20, 21, and 22 with zone 20 being the most hazardous.

The relationship between workplace Zones and equipment Categories is defined in the table below.

| Zone (workplace) | Category (equipment) | Atmospheric Hazard | Definition | Exposure (hours/year) | Does NORD offer drives? |
|---|---|---|---|---|---|
| 0 | 1G | Gas | Explosive atmosphere is present continuously or frequently due to malfunctions. | > 1000 | No |
| 20 | 1D | Dust | | | |
| 1 | 2G | Gas | Explosive atmosphere is present occasionally or due to anticipated malfunctions. | 10 … 1000 | Yes |
| 21 | 2D | Dust | | | |
| 2 | 3G | Gas | Explosive atmosphere is unlikely to occur in normal operation and if it does occur, it will be for a short period of time. | < 10 | Yes |
| 22 | 3D | Dust | | | |


Send Quote Requests to info@automatedpt.com
Call +1(800)985-6929 To Order or Order Online At Nordgearmotors.com

Send Quote Requests to info@automatedpt.com Call +1(800)985-6929 To Order or Order Online At Nordgearmotors.com



# ATEX Information



## Production Type

Following the equipment category in the explosion protection declaration is the lower case letters that indicate the exact protection type of the equipment. Depending on the zone and equipment category different solutions are possible.

| Motors: | |
|---|---|
| Flameproof enclosure | d |
| Increased safety | e |
| Non-sparking | n |
| **Gear Units:** | |
| Constructional safety | c |
| Liquid immersion | k |

## Flameproof Enclosure "EEx d"

Flameproof motors are designed with stronger walls and specific ignition gaps to prevent internal explosions from transmitting to the surrounding atmosphere. Flameproof motors are frequently used for inverter operations, brakes, encoders and when a very high degree of safety is required. Specifically flameproof motors:

- Have housings that can withstand internal explosion pressures
- Have ignition gaps designed to dissipate the pressure arising from an internal explosion
- Are designed so that generated hot gases are significantly cooled by the time they escape the motor body so they do not potentially ignite the potentially explosive environment

## Increased Safety "EEx e"

Increased safety motors are designed with higher quality insulation and larger clearances between rotating parts. This prevents sparking as well as high surface and internal temperatures even during motor malfunction. Increased safety motors are less expensive than flameproof motors, but use special windings that generally result in lower performance than flameproof motors.

## Non-Sparking "EEx n"

Non-sparking motors resemble increased safety "e" motors, but do not achieve the same protection level. They do however have the same power output of flameproof motors and can be used in conjunction with approved inverters.

## Constructional Safety "EEx c"

Construction safety for gear units takes into account measures including ignition protection from hot surface temperatures, sparks, moving parts and adiabatic compression even under expected gear unit failures. NORD provides gear units with constructional safety protection.

## Liquid Immersion "EEx k"

Liquid immersion protection type "k" ensures partial or complete submersion in a protective fluid or constant wetting of a potentially combustible surface.

## ATEX Temperature Specification

In a dust-air mixture surface temperature is a critical thermal factor, therefore the maximum surface temperature is declared based upon the dust type that is present. The goal is to keep surface temperatures below the smoldering and ignition temperature of a dust-air mixture. NORD displays a maximum surface temperature on the reducer nameplate, typically 125°C.

Gas-air mixtures are grouped into temperature classes. The following table shows the maximum surface temperature and temperature ignition ranges and the for each temperature class.

| Temperature Class | Maximum Surface Temperature °C | Ignition Temperature °C |
|---|---|---|
| T1 | 450 | > 450 |
| T2 | 300 | 300 … 450 |
| T3 | 200 | 200 … 300 |
| T4 | 135 | 135 … 200 |
| T5* | 100 | 100 … 135 |
| T6* | 85 | 85 … 100 |

* Not satisfied with AC gear drives


Send Quote Requests to info@automatedpt.com
Call +1(800)985-6929 To Order or Order Online At Nordgearmotors.com

Send Quote Requests to info@automatedpt.com Call +1(800)985-6929 To Order or Order Online At Nordgearmotors.com



## ATEX unit Selection

Since the selection of gear units for hazardous locations requiring ATEX certification can be somewhat confusing, NORD has simplified the process.

1. Select a gear unit based upon power, speed and service factor
2. Contact NORD to request the ATEX inquiry form. The form is also available at www.nord.com.

3. Fill in the ATEX inquiry form
   - Select the hazard, Gas or Dust
   - Select the zone
   - Select the temperature class (for gas) or select electrically conductive or non-conductive for dust hazards

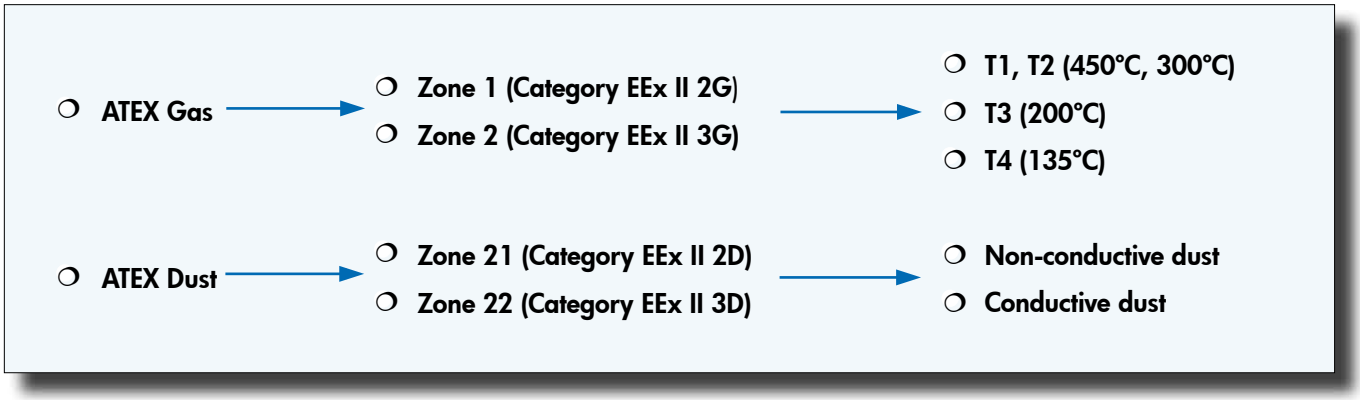


4. Return the completed ATEX inquiry form
5. NORD engineers will review your selection to ensure it conforms to ATEX guidelines
6. If you selection is approved, Customer Service will quote the unit. If not, NORD engineers will make a unit selection recommendation.

## ATEX Documentation

ATEX applications require more documentation than gear drive equipment used in non-hazardous locations. Each ATEX certified NORD gear drive undergoes verification to ensure it will safely operate within the limits of the ATEX specification. NORD stores and supply this document to the customer upon request. In addition, ATEX specific operation & maintenance instructions are included with each equipment delivery in the language of the equipment builder and end user.


Send Quote Requests to info@automatedpt.com
Call +1(800)985-6929 To Order or Order Online At Nordgearmotors.com

Send Quote Requests to info@automatedpt.com Call +1(800)985-6929 To Order or Order Online At Nordgearmotors.com



# Lubrication

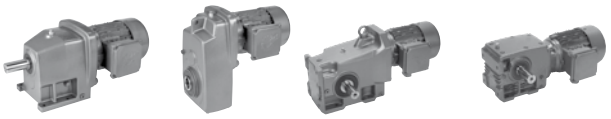

## The Importance of Proper Lubrication

Proper gearbox lubrication is essential in order to reduce friction and component wear, and protect against corrosion and rust. Gear lubricants reduce heat and wear by inserting a load-sharing "protective fluid film" between mating parts and preventing direct metal to metal contact. Properly selected lubricants will operate under various film conditions, improve heat transfer, optimize reducer efficiency, absorb shock loads, reduce noise, inhibit foaming, and separate water readily.

## Design Considerations

Along with many other factors, the gear designer must consider the type of gearing (helical, bevel, worm, etc.), the gear load and speed conditions, and the expected operating oil temperatures. These factors help determine a generally suitable oil category, a desired additive package, preferred base-oil type, and oil viscosity.

It is important that the consumer be aware of these many design factors before making any changes in the critical areas (oil category, base-oil type, viscosity, etc.) One should consult their preferred lubrication supplier or NORD Gear when questions arise.

## Gear Oil Types, Categorized by Base Oil

***Mineral Oil with an EP Additive (DIN 51517, Type CLP)***

High performance mineral gear oils are carefully engineered and manufactured to improve aging characteristics, minimize friction, offer good wear protection, provide corrosion and oxidation resistance, minimize foam, and separate water. Mineral gear oils are classified as API Group I or II oils, depending upon viscosity.

The standard NORD mineral gear oil has an extreme pressure (EP) additive ISO Viscosity Grade EP220 (AGMA 5 EP) and is generally acceptable for helical and helical-bevel gear units. Good quality mineral oil should have the ability to operate at moderate sump temperatures (up to 80-85 °C) without losing viscosity or thickness. A minimum viscosity index (VI) of 93 or higher is suggested. The oil must also have good film strength to handle shock loads, high torque, and start-up conditions. A minimum FZG Scuffing Load Stage 12 is desirable.

**Advantages:**

- Most economical of all the gear oil types.
- Generally offers good compatibility with shaft seals, gaskets, paint finishes, etc.
- Offers good corrosion and oxidation protection.
- Effectively reduces internal friction and wear.

### When Synthetic Oils Are Used

Synthetic gear oils are suggested when mineral gear oils have reached their performance limit or when they no longer meet certain application requirements. NORD may recommend synthetic oil for any one of the following conditions:

- Severe duty applications or when gears are exposed to frequent starts and stops, high-load or shock.
- For applications in low or high temperature service.
- To extend oil service interval requirements.
- To eliminate the necessity for seasonal oil changes.
- To extend service life of factory-sealed or maintenance-free gear units.
- To take advantage of performance benefits: shear resistance, low traction coefficient, reduced internal friction, improved lubricity, reduced operating temperatures, improved gear efficiency, etc.

### Performance Advantages of Synthetic Oil

Compared to mineral oils, synthetic oils provide a number of performance advantages including:

- Ability to operate at higher temperatures without losing viscosity or thickness, due to a much improved viscosity index.
- Improved low-temperature stability due to a lower pour point
- Increased oil change intervals due to superior oxidative and wear resistance
- Lower tendency to form residues and increased resistance to foaming.
- Other benefits may include: very good shear resistance, low traction coefficient, reduced internal friction, improved lubricity, reduced operating temperatures, improved gear efficiency, and extended component life and wear protection.

When application conditions warrant the use of synthetic oil, NORD may suggest a particular type of synthetic oil, depending upon the gear unit type and the application.


Send Quote Requests to info@automatedpt.com
Call +1(800)985-6929 To Order or Order Online At Nordgearmotors.com

Send Quote Requests to info@automatedpt.com Call +1(800)985-6929 To Order or Order Online At Nordgearmotors.com



***Synthetic Hydrocarbon/Polyalphaolefin (SHC/PAO) Oil (DIN 51517, Type CLP-HC)***

Synthetic Hydrocarbons (SHC) or Polyalphaolefin (PAO) synthetic base oils offer good miscibility with mineral base oils and are very readily available. SHC/PAO oils are classified as API Group IV oils. The can be formulated with or without anti-wear (AW) or extreme pressure (EP) additives. They can also be formulated for acceptance in food-grade applications.

**Advantages:**

- Higher viscosity index and therefore greater high-temperature stability than mineral oil.
- Better low-temperature stability and lower pour point than mineral type gear oils
- High surface tension and lower tendency to foam compared to mineral oil, and water-soluble polyglycol gear oils.
- Compatible (miscible) with mineral oil.
- Better water seperability demulsibility than PG oils.

***Polyalkylene Glycol or Polyglycol Synthetic Oil (DIN 51517, Type CLP-PG)***

Polyalkylene glycol or polyglycol (PAG or PG) synthetic gear oils are made readily available through many lubrication suppliers. PG oils are classified as API Group V gear oils. They can also be formulated for acceptance in food-grade applications.

PG gear oils possess extremely low traction coefficients and a viscosity index higher than any of the other synthetics (often greater than 220 VI), resulting in excellent heat resistant, shear stability, and natural anti-wear properties.

Typical PG gear oils are formulated with a 1:1 or higher ratio of ethylene oxide to propylene oxide (50:50 or 60:40 is common); this makes PG gear oils water soluble, providing them with very good corrosion resistance even when water is present in concentrations that are higher then what is normally allowed.

**Advantages:**

- PG oils offer the highest viscosity index of any other synthetic resulting in excellent heat resistant, shear stability, and superior natural anti-wear properties without requiring EP-additives.
- PG gears oils minimize internal friction and often result in improved gear efficiency.
- PG oils have significantly higher film strength than mineral and SHC/PAO oils and out perform these oils at higher operating oil temperatures (approaching 80°C or higher).

**CAUTIONS**

Polyglycol (PG) oils are not miscible with other oil types and should never be mixed with mineral oil, hydrosynthesized synthetic or PAO synthetic oils.

## Food-Grade Lubricants

Food-grade lubricants should be manufactured in compliance with FDA 212 CFR 178.3570 and should either satisfy the former 1998 USDA Guidelines as an H1 lubricant or currently qualify as a NSF-H1 lubricant. Please consult with lubrication manufacture for more information or visit www.nsf.org

H1 food grade oil can only contain additives which appear on the FDA "approved list" for food safe compounds. H1 oils are generally absent of common zinc-based AW additives, and sulfur-phosphorus based, EP chemistries, commonly found in many industrial gear oils.

Food manufactures control risk and liability by following detailed guidelines outlined by the HACCP (Hazard Analysis and Critical Control Point) program, which includes food-grade H1 lubricants.

Food grade H1 lubricants may be formulated as highly refined mineral oils (white oils), SHC/PAO synthetic oils or PG synthetic oils.

The highly refined nature of good-quality food-grade white-oils provides good long-term oxidative stability and in most cases adequate lubrication under high-load (boundary) conditions. So long as food-grade white oils meet the minimum anti-wear requirements of the normally specified non-food grade oil, they are often acceptable.

Both food-grade white oils and PAO's have an inherent "purity" and absence of polar compounds, making them better than the average mineral oil or even PG oil in terms of demulsibility (water seperability).

Compared to food-grade white-oils, food-grade synthetic PAO or PG oils typically provide:

- Better wear and oxidation resistance.
- Improved high-temperature characteristics.
- Better cold-temperature behavior.



Send Quote Requests to info@automatedpt.com
Call +1(800)985-6929 To Order or Order Online At Nordgearmotors.com

Send Quote Requests to info@automatedpt.com Call +1(800)985-6929 To Order or Order Online At Nordgearmotors.com



# Lubrication



## The Importance of Oil Viscosity

Viscosity or the oil's resistance to shear under load, is often considered the single most important property of any gear oil.

NORD Gear Designers have selected the most appropriate ISO viscosity grade of oil, for each type or class of gear reducer. Gear oil viscosity is selected by assuming typical ambient conditions, at rated speed and load conditions.

**Important Considerations:**

- The correct viscosity selection helps provide proper lubrication and assures that a minimum film thickness is maintained between interacting surfaces.
- The degree to which viscosity changes with temperature or the viscosity index, varies from oil to oil, and depends upon the type of lubricant and additive agents used.
- Selecting too low of a viscosity can result in mixed-boundary (partial metal-tometal contact) or boundary lubrication (full metal-to-metal contact) conditions, increasing internal friction heat build-up and wear.
- Selecting too high of a viscosity results in increased churning and squeezing losses in the load zone and excessive heat (especially when peripheral gear speeds are high); Ultimately, this causes the oil temperature to rise and the viscosity to go down, decreasing the effectiveness of the lubricant.

## Considering an Oil Viscosity Change

There are three primary reasons to consider a lubrication viscosity change as follows:

1. Low temperature gear oils should be selected so that the pour point is at least 9°F (5°C) lower than the expected minimum ambient temperature. In extreme cases, consider a lower ISO Viscosity rating and test the critical performance of the gear box under cold start-up.

2. High temperature applications may require an increase in the lubricants viscosity to assure proper lubrication conditions in the critical load zones of the gear unit. NORD also recommends switching to synthetic oil if oil sump temperatures exceed 176-185 °F (80-85 °C).

3. In cases of extreme load conditions, gear pairs and antifriction bearings may be more susceptible to scuffing wear. In these operating conditions, it may be beneficial to consider an increased lubrication viscosity and/or lubrication with improved antiwear additive packages.

NORD recommends that the user consult with their primary lubrication supplier when considering changes in oil viscosity.

## Maximum Oil Sump Temperature Limit

To prevent reducer overheating, the reducer's maximum oil sump temperature limit must not be exceeded for prolonged periods of operation (up to 3 hours continuous operation, depending upon reducer size).

| Oil Type | Maximum Oil Temperature Limit | |
|---|---|---|
| | NORD | AGMA 9005-D94 |
| Mineral | 80-85 °C (176-185 °F) | 95 °C (203 °F) |
| Synthetic | 105 °C (220 ° F) | 107 ° C (225 ° F) |


Send Quote Requests to info@automatedpt.com
Call +1(800)985-6929 To Order or Order Online At Nordgearmotors.com

Send Quote Requests to info@automatedpt.com
Call +1(800)985-6929 To Order or Order Online At Nordgearmotors.com



## Oil Expansion Chamber (OA)

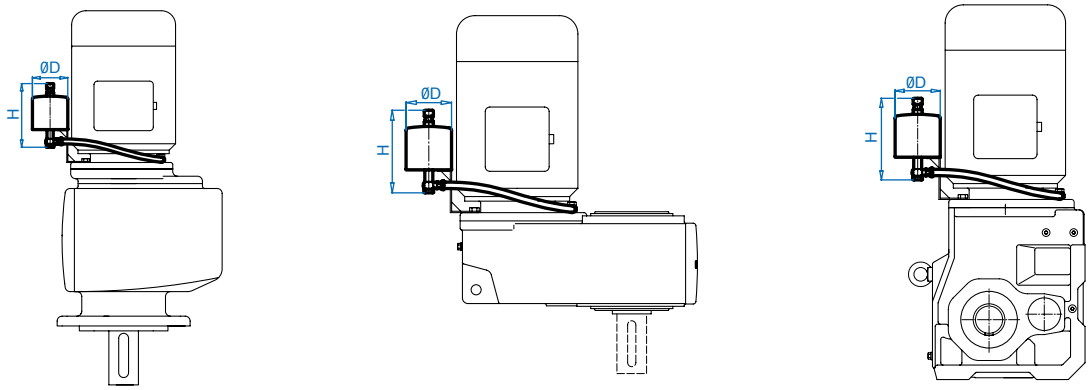


| Helical In-line Gear Unit | Clincher™ Gear Unit | Helical-Bevel Gear Unit | Size | Part Number | D | H | [lb] |
|---|---|---|---|---|---|---|---|
| SK 42/SK 43<br>SK 52/SK 53<br>SK 63 | SK 4282/SK 4382<br>SK 5282/SK 5382<br>SK 6382 | SK 9042.1/SK 9043.1<br>SK 9052.1/SK 9053.1 | I | 28390390 | 3.94 | 7.09 | 11.0 |
| SK 62<br>SK 72/SK 73 | SK 6282<br>SK 7282/SK 7382 | SK 9072.1<br>SK 9082.1 | II | 28390400 | 5.91 | 11.81 | 13.2 |
| SK 82/SK 83<br>SK 92/SK 93<br>SK 102/SK 103 | SK 8282/SK8382 | SK 9086.1<br>SK 9092.1<br>SK 9096.1 | III | 28390410 | 7.09 | 11.81 | 15.4 |

## Oil Expansion Chamber (OA)

Gear units with the motor or input shaft mounted vertically upright must be filled almost completely with oil in order to properly supply the 1st stage gearing with oil. Certain operating conditions and higher gear peripheral speeds can result in increased oil churning or splashing losses and heating of the air space located above the oil.

For these conditions an oil expansion chamber or oil overflow chamber is often recommended. At rest, the gear unit is filled to its normal fill-level position and there should be no oil in the expansion chamber.

During operation, the oil expansion chamber provides a safe overflow area for the expanded oil-air mixture, thus eliminating excessive pressure build-up, minimizing the formation of foam, and preventing oil-loss through the breather, oil seals, gaskets, etc. As heat is released from the expanded air-oil mixture contained within the overflow chamber, gravity allows the oil to be returned to the primary gear sump supply, eliminating a critical loss in oil level.

### *Application Considerations*

Nord strongly recommends the use of an oil expansion chamber when the motor is mounted vertical-up, when the reducer mounting position is M4 or when it meets any of the criteria listed below. Any application required to operate above 1800 rpm synchronous motor speeds should also be reviewed to be certain that the reducer thermal limits are observed.

- Helical In-line gear unit sizes SK42 and larger, with ratios $i_{total} \leq 24:1$ or output speeds $n_2 \geq 75$ rpm.
- Parallel shaft gear unit sizes between SK4282 - SK8282 ♦, with ratios $i_{total} \leq 24:1$ or output speeds $n_2 \geq 75$ rpm.
- Helical-bevel gear unit sizes SK9042.1 and larger with ratios $i_{total} \leq 24:1$ or output speeds $n_2 \geq 75$ rpm.
- Any helical-worm gear unit with ratio $i_{total} \leq 20:1$ or output speeds $n_2 \geq 90$ rpm (please consult NORD for application review).
- ♦ Clincher gear unit sizes SK9282/SK9382 and larger require an oil reservoir (option OT) instead of an oil expansion chamber (Option OA).


Send Quote Requests to info@automatedpt.com
Call +1(800)985-6929 To Order or Order Online At Nordgearmotors.com

# Lubrication



## Oil Reservoir Tank (OT)

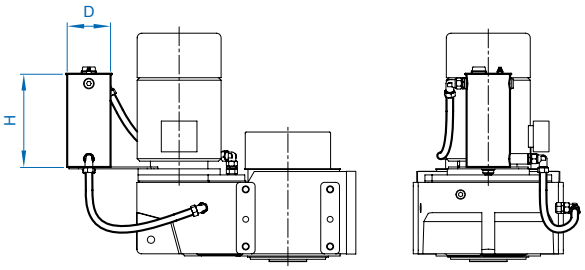


| Parallel Shaft Gear Unit | Size | D | H | Additional Oil Fill (L) | Container Volume (L) |
|---|---|---|---|---|---|
| SK 9282/SK9382 SK10382.1 | I | 7.87 | 15.75 | approx. 30 | 10 |
| SK11382.1 | II | 12.99 | 15.75 | approx. 40 | 30 |

## Oil Reservoir Tank

Clincher™ shaft mount units SK9282 and larger, with the motor or input shaft mounted vertically upright, should be filled with oil in order to prevent excessive foaming and heat build-up.

The oil reservoir must be located above the gear unit. Even at non-operating ambient conditions, a small amount of oil should be visible in the bottom of the oil reservoir. During operation, all parts are submersed in oil, especially the high-speed gear set, thus preventing, the formation of oil foam. In addition, this type of installation assures that all bearings are properly lubricated with oil.

The oil reservoir is larger than the oil expansion chamber and is vented. The oil reservoir has two flexible oil hoses connected to the gear unit to help assure proper ventilation and passive oil circulation.

As a standard, the gear unit is supplied with the oil fill stated on pages A46/A47. Upon commissioning, the oil tank must be filled to the level shown on the dip-stick located inside the tank (approximations shown in above table). The user is responsible to add this additional oil, however, the oil can be supplied by NORD for an additional charge.

### *Application Considerations*

NORD strongly recommends the use of an oil reservoir tank when the following conditions apply:

- Gear ratios $i_{total} \leq 24{:}1$or output speed $n_2 \geq 75$ rpm.
- Installations with motor mounted vertical-up or when the reducer mounting position is M4.
- Parallel shaft gear unit sizes SK9282/SK9382 and larger.

## Water Cooling Cover (WC)

Clincher™ shaft mount units and Helical-bevel units are available with a water cooling system integrated into the assembly cover on the unit. The cover is made of aluminum and cooling coils in the cover prevent direct contact with the oil sump, therefore eliminating the possibility of oil contamination. Simple threaded fittings are used to connect the coils to the customer supplied heat exchanger. NORD recommends monitoring the temperature or flow rate of water since the cooling coil does not lie in the oil reservoir.

If low ambient temperatures exist, the heat exchanger may be used to provide heat to the gear unit.

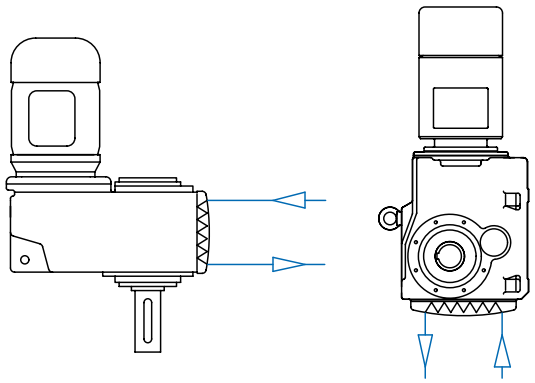


Send Quote Requests to info@automatedpt.com
Call +1(800)985-6929 To Order or Order Online At Nordgearmotors.com

Send Quote Requests to info@automatedpt.com Call +1(800)985-6929 To Order or Order Online At Nordgearmotors.com



## Oil Cooler (OC)

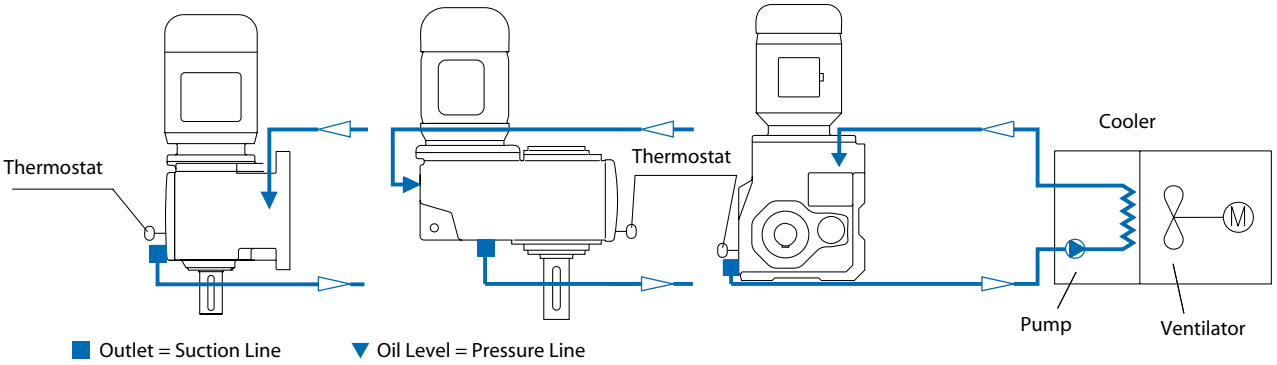


## Oil Cooler

In certain applications, in order to prevent reducer overheating, NORD may recommend an oil cooler. In the event the customer wishes to supply their own device, NORD can estimate the amount of heat dissipation required, for a given set of application parameters.

NORD can also provide a compact air-over-oil cooling unit. The oil cooler (Option OC) comes complete with heat exchanger, motor, pump, circulating fan, and connection hoses. Oil is pumped from the reducer and cooled by the air stream created by the large fan. The temperature is controlled by a thermostat. Please consult NORD for additional details about the oil cooler.

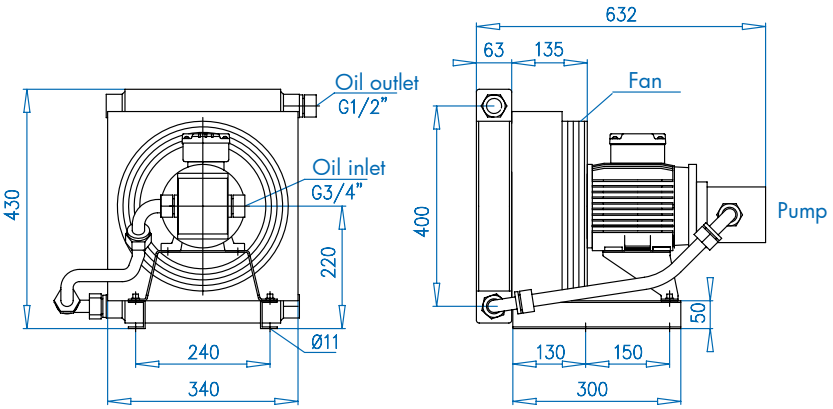


**Not suited for hazardous areas or potentially explosive atmospheres.**

| | | | |
|---|---|---|---|
| **Oil Cooler Type** | TFS/A 8,5-400-F-03-11 | **Motor Power** | 0.55 kW |
| **Supplier** | UNIVERSAL HYDRAULIK® | **Frequency** | 50 Hz / 60Hz |
| **Input / Output Connection** | G3/4" / G1/2" | **Supply Voltage** | 230-400 V/50 HZ – 460 V/60 Hz |
| **Cooling Capacity** | 8.5 kW | **Rated Current** | 1.7 A |
| **Pump Capacity** | 30 l/min | **Phase** | 3 ~ |
| **Rate of Air Flow** | 1131 m³/h | **RPM** | 1350 / 1650 |
| **Viscosity Range** | 10-300 mm³ /s | **Construction Class** | IP55 |
| **Permissible Pressure** | 10 bar | **Insulation Class** | F |
| | | **Temperature Class** | B |


Send Quote Requests to info@automatedpt.com
Call +1(800)985-6929 To Order or Order Online At Nordgearmotors.com

# Lubrication



## Lubrication Types

Proper gearbox lubrication is essential in order to reduce friction, heat, and component wear. Lubricants reduce heat and wear by inserting a protective "fluid boundary" between mating parts and preventing direct metal to metal contact. Lubricants also help prevent corrosion and oxidation, minimize foam, improve heat transfer, optimize reducer efficiency, absorb shock loads and reduce noise.

Mounting position not only determines the proper fill-level but may also have some effect on final reducer assembly. If considering any mounting positions that are not shown as catalog-standard options, it is critical that the customer consult with NORD prior to ordering. Unless otherwise specified, NORD supplies most all gear units (*) factory-filled with the standard lubrication type and the appropriate amount of lubricating oil.

* Gear units SK10282, SK10382, SK11282, SK11382, SK12382, and SK9096.1 are supplied without oil.

### Standard Oil Lubricants

| Gear Unit Type | ISO Viscosity | Oil Type | Ambient Temperature Range | Manufacturer Brand/Type | Notes |
|---|---|---|---|---|---|
| Helical In Line, Parallel-Shaft & Bevel | VG220 | MIN-EP | 0 to 40°C (32 to 104°) | Mobilgear 600XP220 | ♦❶ |
| | VG220 | PAO-EP | -35 to 60°C (-31 to 140°F) | Mobil SHC Gear 220 | ♦❷ |
| | VG220 | FG | -5 to 40°C (23 to 104°F) | Fuchs FM220 | ♦ |
| Helical Worm | VG680 | PAO | 0 to 60°C (32 to 140°F) | Mobil SHC636 | ♦ |

### Optional Oil Lubricants

| Gear Unit Type | ISO Viscosity | Oil Type | Ambient Temperature Range | Manufacturer Brand/Type | Notes |
|---|---|---|---|---|---|
| Helical In Line, Parallel-Shaft & Bevel | VG460 | PAO-EP | -35 to 80°C (-31 to 176°F) | Mobil SHC Gear 460 | - |
| | VG150 | PAO-EP | -35 to 25°C (-31 to 77°F) | Mobil SHC Gear 150 | - |
| | VG220 | FG-PAO | -35 to 60°C (-31 to 140°F) | Mobil SHC Cibus 220 | - |
| Helical Worm | VG460 | PAO | 0 to50°C (32 to 122°F) | Mobil SHC 634 | - |
| | VG460 | FG-PAO | 0 to50°C (32 to 122°F) | Mobil SHC Cibus 460 | - |

### Standard Bearing Grease Lubricants

| Grease Thickener | NLGI Grade | Grease Type | Ambient Temperature Range | Manufacturer Brand/Type | Notes |
|---|---|---|---|---|---|
| Li-Complex | NLGI 2 | MIN | -30 to 60°C (-22 to 140°F) | Mobil Grease XHP222 | ♦❶ |
| Li-Complex | NLGI 2 | PAO | -40 to 80°C (-40 to 176°F) | Mobil / Mobilith SHC 220 | ♦❷ |
| Polyurea | NLGI 2 | FG-PAO | -30 to 80°C (-22 to 176°F) | Mobil SHC Polyrex 222 | ♦ |

♦ Stocked Lubricants

❶ Standard product on serviceable gear units

❷ Standard product on maintenance free gear units

**Oil Formulation Codes**

| | |
|---|---|
| **MIN-EP** | Mineral Oil with EP Additive |
| **PAO** | Synthetic Polyalphaolefin Oil |
| **PAO-EP** | Synthetic Polyglycol Oil with Additive |
| **PG** | Synthetic Polyglycol Oil |
| **FG** | Food-Grade Oil |
| **FG-PAO** | Food-Grade, Synthetic Polyalphaolefin Oil |

**Important Notes**

- In worm gears avoid using (EP) gear oils that contain sulfur-phosphorous chemistries, as these additives can react adversely with bronze worm gears and accelerate wear.
- Food grade lubricants must be in compliance with FDA 212 CFR 178.3570 and qualify as a NSF-H1 lubricant. Please consult with lubrication manufacture for more information.
- When making a lubrication change, check with the lubrication supplier to assure compatibility & to obtain recommended cleaning or flushing procedures.
- Do not mix different oils with different additive packages or different base oil formulation types. Polyglycol (PG) oils are not miscible with other oil types and should never be mixed with mineral oil, or Polyalphaolefin (PAO) oil.
- Please Consult NORD if considering cold-temperature oils below an ISO Viscosity VG100 or lower.


Send Quote Requests to info@automatedpt.com
Call +1(800)985-6929 To Order or Order Online At Nordgearmotors.com

Send Quote Requests to info@automatedpt.com Call +1(800)985-6929 To Order or Order Online At Nordgearmotors.com



## Ventilation

Most gear reducers (except for SK0182NB, SK0282NB and SK1382NB) are equipped with a vent which helps compensate for air pressure differences between the inner space of the gear unit and the atmosphere.

The spring-pressure vent (Autovent™) is commonly supplied and factory-installed. Normally open vents may also be supplied as an option; normally-open vents are closed upon delivery in order to prevent oil leakage during transport. When normally open vents are supplied, the sealing plugs must be removed prior to commissioning the reducer.

Prior to reducer start-up, it is important to check the maintenance manual to verify that the vent is properly located with respect to mounting position.

## Mounting Position

The reducer mounting position determines the approximate oil fill-level and the appropriate vent location. In some cases mounting position may dictate possible variation in final reducer assembly.

If considering any mounting positions that are not shown as catalog-standard options, it is critical that the customer consult with NORD prior to ordering.

## Oil Fill Quantities

Oil fill quantities shown in the catalog or maintenance instructions are approximate amounts. The actual oil volume varies depending upon the gear ratio. Prior to commissioning the reducer, the oil-fill level should be checked using the reducer's oil-level plug. It may be necessary to drain excess oil or add additional oil.

Unless otherwise specified, NORD supplies most all gear units factory-filled with the standard lubrication type per the specified mounting position. Gear units SK10282, SK10382, SK11282, SK11382, SK12382, and SK9096.1 are supplied without oil.

## Lubrication Replacement

If the gear unit is filled with mineral oil, the lubricant should be replaced at least after every 10,000 operating hours or after every two years. If the gear unit is filled with synthetic oil, the lubricant should be replaced at least after every 20,000 operating hours or after every four years.

Often gear reducers are exposed to extreme ambient conditions, hostile environments, wet conditions, or dirty and dusty operating areas. Especially in these situations, it is important to change the reducer lubricant more often that what is suggested as a typical guideline.

## The Importance of Routine Oil Analysis

Routine oil analysis, sound lubrication practices, and good tracking of oil performance trends as related to specific equipment, will help establish proper lubrication maintenance and change-out intervals.

To maximize equipment reliability, NORD Gear generally recommends a condition-based lubrication maintenance program. One may take exceptions to this general recommendation on sealed-for-life or maintenance-free gear units or smaller and less costly gear units. In these instances, the replacement cost of the gear unit is often small compared to the costs associated with this type of oil analysis program.

NORD suggests replacing the gear oil if oil analysis indicates any of the following:

- Viscosity has changed by approximately 10% or more.
- Debris particles (silicon, dust, dirt or sand) exceed 25 ppm.
- Iron content exceeds 150-200 ppm.
- Water content is greater than 0.05% (500 ppm).
- Acid number tests indicate a significant level of oxidative break-down of the oil and a critical reduction in performance.



Send Quote Requests to info@automatedpt.com
Call +1(800)985-6929 To Order or Order Online At Nordgearmotors.com

# In-line Foot Mount Positions & Oil Fill Quantities



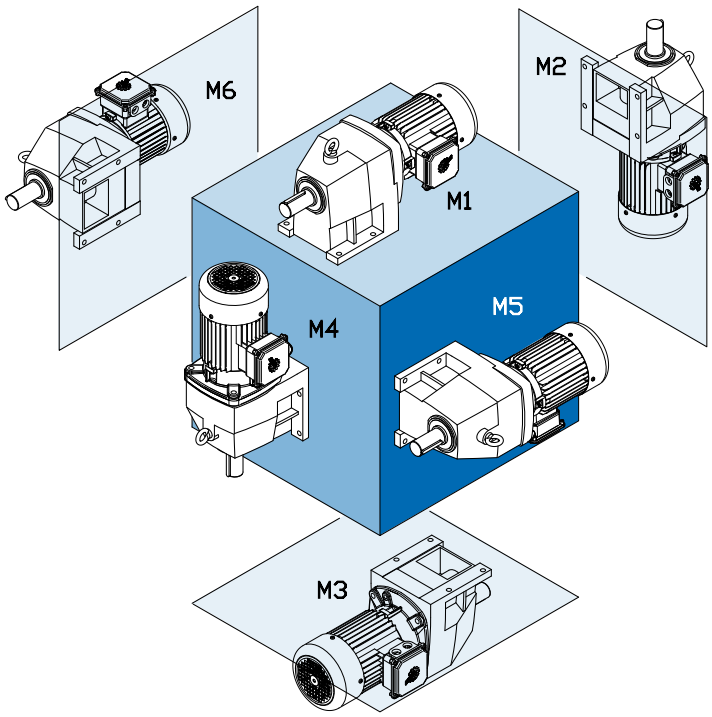


| Mounting Position | M1 | | M2 | | M3 | | M4 | | M5 | | M6 | |
|---|---|---|---|---|---|---|---|---|---|---|---|---|
| | Quarts | Liters | Quarts | Liters | Quarts | Liters | Quarts | Liters | Quarts | Liters | Quarts | Liters |
| **SK02** | 0.16 | 0.15 | 0.63 | 0.60 | 0.74 | 0.70 | 0.63 | 0.60 | 0.42 | 0.40 | 0.42 | 0.40 |
| **SK03** | 0.32 | 0.30 | 1.06 | 1.00 | 0.85 | 0.80 | 0.95 | 0.90 | 0.63 | 0.60 | 0.63 | 0.60 |
| **SK11E** | 0.26 | 0.25 | 0.53 | 0.50 | 0.58 | 0.55 | 0.42 | 0.40 | 0.37 | 0.35 | 0.37 | 0.35 |
| **SK12** | 0.26 | 0.25 | 0.79 | 0.75 | 0.90 | 0.85 | 0.79 | 0.75 | 0.53 | 0.50 | 0.53 | 0.50 |
| **SK13** | 0.63 | 0.60 | 1.32 | 1.25 | 1.16 | 1.10 | 1.27 | 1.20 | 0.74 | 0.70 | 0.74 | 0.70 |
| **SK21E** | 0.63 | 0.60 | 1.27 | 1.20 | 1.27 | 1.20 | 1.06 | 1.00 | 1.06 | 1.00 | 1.06 | 1.00 |
| **SK22** | 0.53 | 0.50 | 1.90 | 1.80 | 2.11 | 2.00 | 1.90 | 1.80 | 1.43 | 1.35 | 1.43 | 1.35 |
| **SK23** | 1.37 | 1.30 | 2.54 | 2.40 | 2.43 | 2.30 | 2.48 | 2.35 | 1.69 | 1.60 | 1.69 | 1.60 |
| **SK31E** | 1.16 | 1.10 | 2.85 | 2.70 | 2.33 | 2.20 | 2.43 | 2.30 | 1.80 | 1.70 | 1.80 | 1.70 |
| **SK32** | 0.95 | 0.90 | 2.64 | 2.50 | 3.17 | 3.00 | 3.07 | 2.90 | 2.11 | 2.00 | 2.11 | 2.00 |
| **SK33N** | 1.69 | 1.60 | 3.07 | 2.90 | 3.38 | 3.20 | 3.91 | 3.70 | 2.43 | 2.30 | 2.43 | 2.30 |
| **SK41E** | 1.80 | 1.70 | 2.75 | 2.60 | 3.49 | 3.30 | 2.64 | 2.50 | 2.75 | 2.60 | 2.75 | 2.60 |
| **SK42** | 1.37 | 1.30 | 4.76 | 4.50 | 4.76 | 4.50 | 4.55 | 4.30 | 3.38 | 3.20 | 3.38 | 3.20 |
| **SK43** | 3.17 | 3.00 | 5.92 | 5.60 | 5.50 | 5.20 | 6.98 | 6.60 | 3.81 | 3.60 | 3.81 | 3.60 |
| **SK51E** | 2.33 | 2.20 | 4.65 | 4.40 | 4.97 | 4.70 | 4.23 | 4.00 | 3.59 | 3.40 | 3.59 | 3.40 |
| **SK52** | 2.64 | 2.50 | 7.40 | 7.00 | 7.19 | 6.80 | 7.19 | 6.80 | 5.39 | 5.10 | 5.39 | 5.10 |
| **SK53** | 4.76 | 4.50 | 9.20 | 8.70 | 8.14 | 7.70 | 9.20 | 8.70 | 6.34 | 6.00 | 6.34 | 6.00 |
| **SK62** | 6.87 | 6.50 | 15.9 | 15.0 | 13.7 | 13.0 | 16.9 | 16.0 | 15.9 | 15.0 | 15.9 | 15.0 |
| **SK63** | 13.7 | 13.0 | 15.3 | 14.5 | 15.3 | 14.5 | 16.9 | 16.0 | 13.7 | 13.0 | 13.7 | 13.0 |
| **SK72** | 10.6 | 10.0 | 24.3 | 23.0 | 19.0 | 18.0 | 27.5 | 26.0 | 24.3 | 23.0 | 24.3 | 23.0 |
| **SK73** | 21.7 | 20.5 | 21.1 | 20.0 | 23.8 | 22.5 | 28.5 | 27.0 | 21.1 | 20.0 | 21.1 | 20.0 |
| **SK82** | 14.8 | 14.0 | 37.0 | 35.0 | 28.5 | 27.0 | 46.5 | 44.0 | 33.8 | 32.0 | 33.8 | 32.0 |
| **SK83** | 31.7 | 30.0 | 32.8 | 31.0 | 35.9 | 34.0 | 39.1 | 37.0 | 34.9 | 33.0 | 34.9 | 33.0 |
| **SK92** | 26.4 | 25.0 | 77.1 | 73.0 | 49.7 | 47.0 | 80.3 | 76.0 | 55.0 | 52.0 | 55.0 | 52.0 |
| **SK93** | 56.0 | 53.0 | 74.0 | 70.0 | 62.4 | 59.0 | 76.1 | 72.0 | 51.8 | 49.0 | 51.8 | 49.0 |
| **SK102** | 38.1 | 36.0 | 83.5 | 79.0 | 69.8 | 66.0 | 107.8 | 102 | 75.1 | 71.0 | 75.1 | 71.0 |
| **SK103** | 78.2 | 74.0 | 75.1 | 71.0 | 78.2 | 74.0 | 102.5 | 97.0 | 70.8 | 67.0 | 70.8 | 67.0 |


Send Quote Requests to info@automatedpt.com
Call +1(800)985-6929 To Order or Order Online At Nordgearmotors.com

Send Quote Requests to info@automatedpt.com
Call +1(800)985-6929 To Order or Order Online At Nordgearmotors.com



# In-line Flange Mount Positions & Oil Fill Quantities

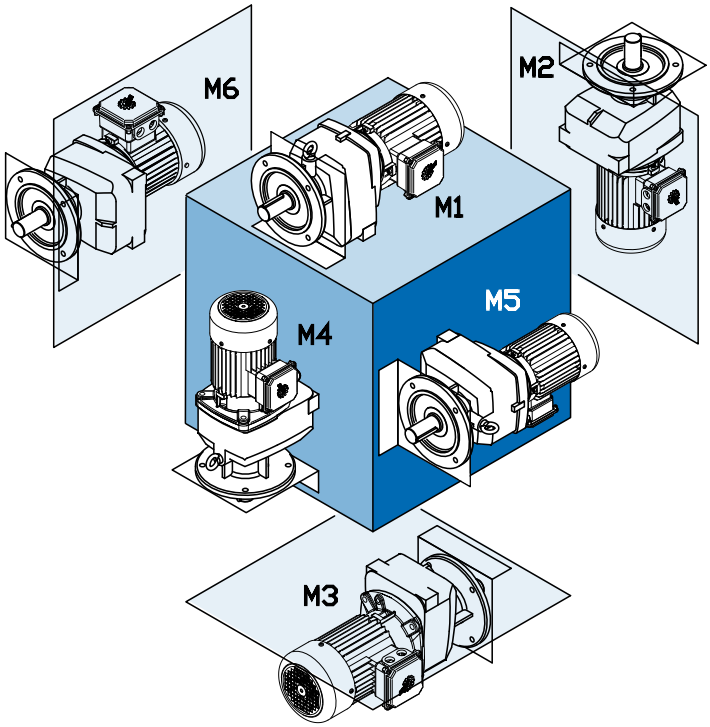


| Mounting Position | M1 | | M2 | | M3 | | M4 | | M5 | | M6 | |
|---|---|---|---|---|---|---|---|---|---|---|---|---|
| | Quarts | Liters | Quarts | Liters | Quarts | Liters | Quarts | Liters | Quarts | Liters | Quarts | Liters |
| SK02 | 0.26 | 0.25 | 0.63 | 0.60 | 0.63 | 0.60 | 0.63 | 0.60 | 0.53 | 0.50 | 0.53 | 0.50 |
| SK03 | 0.53 | 0.50 | 0.85 | 0.80 | 0.95 | 0.90 | 1.16 | 1.10 | 0.85 | 0.80 | 0.85 | 0.80 |
| SK11E | 0.32 | 0.30 | 0.37 | 0.35 | 0.53 | 0.50 | 0.32 | 0.30 | 0.42 | 0.40 | 0.42 | 0.40 |
| SK12 | 0.37 | 0.35 | 0.90 | 0.85 | 0.95 | 0.90 | 0.95 | 0.90 | 0.63 | 0.60 | 0.63 | 0.60 |
| SK13 | 0.90 | 0.85 | 1.27 | 1.20 | 1.27 | 1.20 | 1.27 | 1.20 | 1.00 | 0.95 | 1.00 | 0.95 |
| SK21E | 0.53 | 0.50 | 1.48 | 1.40 | 1.16 | 1.10 | 0.74 | 0.70 | 0.95 | 0.90 | 0.95 | 0.90 |
| SK22 | 0.74 | 0.70 | 2.11 | 2.00 | 2.11 | 2.00 | 1.90 | 1.80 | 1.64 | 1.55 | 1.64 | 1.55 |
| SK23 | 1.59 | 1.50 | 2.75 | 2.60 | 2.64 | 2.50 | 2.96 | 2.80 | 2.96 | 2.80 | 2.96 | 2.80 |
| SK31E | 0.85 | 0.80 | 1.37 | 1.30 | 1.74 | 1.65 | 1.16 | 1.10 | 2.11 | 2.00 | 2.11 | 2.00 |
| SK32 | 1.37 | 1.30 | 3.07 | 2.90 | 3.49 | 3.30 | 3.28 | 3.10 | 2.54 | 2.40 | 2.54 | 2.40 |
| SK33 | 2.01 | 1.90 | 3.59 | 3.40 | 3.70 | 3.50 | 4.65 | 4.40 | 2.75 | 2.60 | 2.75 | 2.60 |
| SK41E | 1.06 | 1.00 | 2.75 | 2.60 | 2.96 | 2.80 | 1.69 | 1.60 | 3.49 | 3.30 | 3.49 | 3.30 |
| SK42 | 1.90 | 1.80 | 4.65 | 4.40 | 4.76 | 4.50 | 4.23 | 4.00 | 3.91 | 3.70 | 3.91 | 3.70 |
| SK43 | 3.70 | 3.50 | 6.02 | 5.70 | 5.29 | 5.00 | 6.45 | 6.10 | 4.33 | 4.10 | 4.33 | 4.10 |
| SK51E | 1.90 | 1.80 | 3.70 | 3.50 | 4.33 | 4.10 | 3.17 | 3.00 | 4.02 | 3.80 | 4.02 | 3.80 |
| SK52 | 3.17 | 3.00 | 7.19 | 6.80 | 6.55 | 6.20 | 7.82 | 7.40 | 5.92 | 5.60 | 5.92 | 5.60 |
| SK53 | 5.50 | 5.20 | 8.88 | 8.40 | 7.40 | 7.00 | 9.41 | 8.90 | 7.08 | 6.70 | 7.08 | 6.70 |
| SK62 | 7.40 | 7.00 | 15.9 | 15.0 | 14.8 | 14.0 | 19.6 | 18.5 | 16.9 | 16.0 | 16.9 | 16.0 |
| SK63 | 14.3 | 13.5 | 14.8 | 14.0 | 16.4 | 15.5 | 19.0 | 18.0 | 14.8 | 14.0 | 14.8 | 14.0 |
| SK72 | 10.6 | 10.0 | 24.3 | 23.0 | 19.6 | 18.5 | 29.6 | 28.0 | 24.3 | 23.0 | 24.3 | 23.0 |
| SK73 | 23.3 | 22.0 | 23.8 | 22.5 | 24.3 | 23.0 | 29.1 | 27.5 | 21.1 | 20.0 | 21.1 | 20.0 |
| SK82 | 15.9 | 15.0 | 39.1 | 37.0 | 30.7 | 29.0 | 47.6 | 45.0 | 36.5 | 34.5 | 36.5 | 34.5 |
| SK83 | 32.8 | 31.0 | 35.9 | 34.0 | 37.0 | 35.0 | 42.3 | 40.0 | 35.9 | 34.0 | 35.9 | 34.0 |
| SK92 | 27.5 | 26.0 | 77.2 | 73.0 | 49.7 | 47.0 | 82.5 | 78.0 | 55.0 | 52.0 | 55.0 | 52.0 |
| SK93 | 56.0 | 53.0 | 74.0 | 70.0 | 62.4 | 59.0 | 78.2 | 74.0 | 51.8 | 49.0 | 51.8 | 49.0 |
| SK102 | 42.3 | 40.0 | 85.6 | 81.0 | 69.8 | 66.0 | 109.9 | 104.0 | 76.1 | 72.0 | 76.1 | 72.0 |
| SK103 | 72.9 | 69.0 | 82.5 | 78.0 | 82.5 | 78.0 | 104.6 | 99.0 | 70.8 | 67.0 | 70.8 | 67.0 |


Send Quote Requests to info@automatedpt.com
Call +1(800)985-6929 To Order or Order Online At Nordgearmotors.com

# Clincher™ Shaft Mount Positions & Oil Fill Quantities



DRIVESYSTEMS

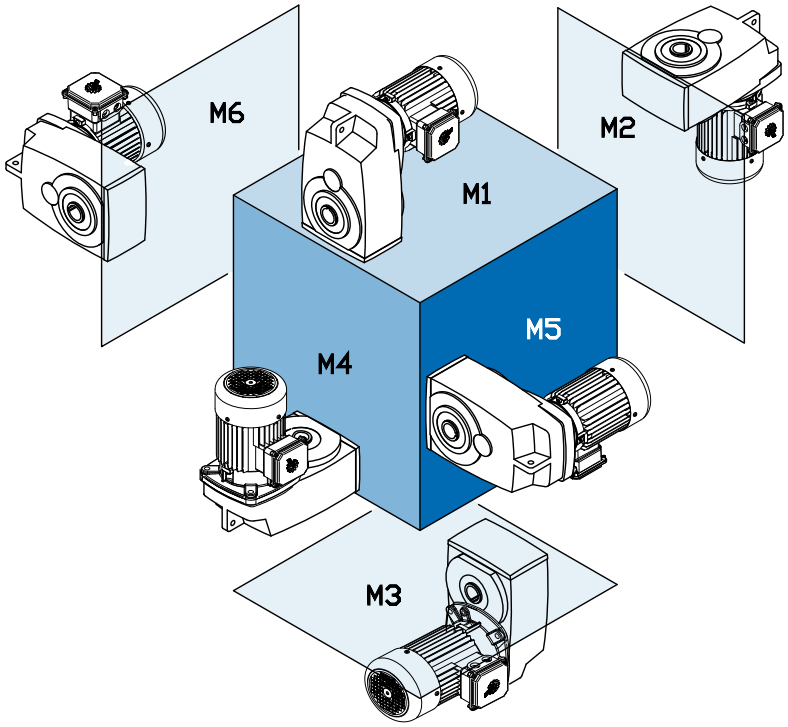


| Mounting Position | M1 | | M2 | | M3 | | M4 | | M5 | | M6 | |
|---|---|---|---|---|---|---|---|---|---|---|---|---|
| | Quarts | Liters | Quarts | Liters | Quarts | Liters | Quarts | Liters | Quarts | Liters | Quarts | Liters |
| **SK0182NB** | 0.42 | 0.40 | 0.58 | 0.55 | 0.63 | 0.60 | 0.58 | 0.55 | 0.37 | 0.35 | 0.37 | 0.35 |
| **SK0282NB** | 0.74 | 0.70 | 1.06 | 1.00 | 0.85 | 0.80 | 1.16 | 1.10 | 0.95 | 0.90 | 0.95 | 0.90 |
| **SK1382NB** | 1.37 | 1.30 | 2.43 | 2.30 | 1.48 | 1.40 | 2.22 | 2.10 | 2.11 | 2.00 | 2.01 | 1.90 |
| **SK1282** | 0.95 | 0.90 | 1.37 | 1.30 | 0.95 | 0.90 | 1.27 | 1.20 | 1.00 | 0.95 | 1.00 | 0.95 |
| **SK2282** | 1.74 | 1.65 | 2.54 | 2.40 | 2.01 | 1.90 | 2.11 | 2.00 | 1.90 | 1.80 | 1.90 | 1.80 |
| **SK2382** | 1.80 | 1.70 | 2.75 | 2.60 | 2.01 | 1.90 | 3.28 | 3.10 | 1.59 | 1.50 | 1.59 | 1.50 |
| **SK3282** | 3.33 | 3.15 | 4.33 | 4.10 | 3.44 | 3.25 | 4.33 | 4.10 | 3.33 | 3.15 | 3.33 | 3.15 |
| **SK3382** | 4.33 | 4.10 | 5.18 | 4.90 | 3.49 | 3.30 | 5.92 | 5.60 | 3.49 | 3.30 | 3.49 | 3.30 |
| **SK4282** | 4.97 | 4.70 | 6.45 | 6.10 | 5.02 | 4.75 | 5.71 | 5.40 | 4.97 | 4.70 | 4.97 | 4.70 |
| **SK4382** | 6.24 | 5.90 | 7.19 | 6.80 | 5.18 | 4.90 | 8.77 | 8.30 | 5.18 | 4.90 | 5.18 | 4.90 |
| **SK5282** | 7.93 | 7.50 | 9.30 | 8.80 | 7.93 | 7.50 | 9.30 | 8.80 | 7.61 | 7.20 | 7.61 | 7.20 |
| **SK5382** | 13.2 | 12.5 | 12.7 | 12.0 | 7.08 | 6.70 | 14.8 | 14.0 | 8.77 | 8.30 | 8.77 | 8.30 |
| **SK6282** | 18.0 | 17.0 | 14.8 | 14.0 | 12.7 | 12.0 | 18.5 | 17.5 | 10.6 | 10.0 | 14.8 | 14.0 |
| **SK6382** | 17.4 | 16.5 | 13.7 | 13.0 | 10.1 | 9.60 | 19.0 | 18.0 | 14.8 | 14.0 | 13.2 | 12.5 |
| **SK7282** | 26.4 | 25.0 | 22.2 | 21.0 | 21.1 | 20.0 | 28.5 | 27.0 | 16.9 | 16.0 | 22.2 | 21.0 |
| **SK7382** | 23.3 | 22.0 | 21.1 | 20.0 | 16.9 | 16.0 | 26.4 | 25.0 | 24.3 | 23.0 | 20.1 | 19.0 |
| **SK8282** | 39.1 | 37.0 | 34.9 | 33.0 | 31.7 | 30.0 | 43.3 | 41.0 | 32.8 | 31.0 | 32.8 | 31.0 |
| **SK8382** | 35.9 | 34.0 | 33.8 | 32.0 | 26.4 | 25.0 | 40.2 | 38.0 | 37.0 | 35.0 | 31.7 | 30.0 |
| **SK9282** | 78.2 | 74.0 | 74.0 | 70.0 | 58.1 | 55.0 | 76.1 | 72.0 | 63.4 | 60.0 | 62.4 | 59.0 |
| **SK9382** | 77.2 | 73.0 | 74.0 | 70.0 | 47.6 | 45.0 | 78.2 | 74.0 | 68.7 | 65.0 | 63.4 | 60.0 |
| **SK10282*** | 95.1 | 90.0 | 95.1 | 90.0 | 42.3 | 40.0 | 95.1 | 90.0 | 63.4 | 60.0 | 86.7 | 82.0 |
| **SK10382*** | 89.8 | 85.0 | 106 | 100 | 77.2 | 73.0 | 106 | 100 | 84.6 | 80.0 | 84.6 | 80.0 |
| **SK11282*** | 174 | 165 | 169 | 160 | 153 | 145 | 206 | 195 | 106 | 100 | 148 | 140 |
| **SK11382*** | 169 | 160 | 164 | 155 | 148 | 140 | 222 | 210 | 164 | 155 | 143 | 135 |
| **SK12382*** | 169 | 160 | 164 | 155 | 148 | 140 | 222 | 210 | 164 | 155 | 143 | 135 |

* These units shipped without oil


Send Quote Requests to info@automatedpt.com
Call +1(800)985-6929 To Order or Order Online At Nordgearmotors.com

Send Quote Requests to info@automatedpt.com
Call +1(800)985-6929 To Order or Order Online At Nordgearmotors.com



# Clincher™ Flange Mount Positions & Oil Fill Quantities

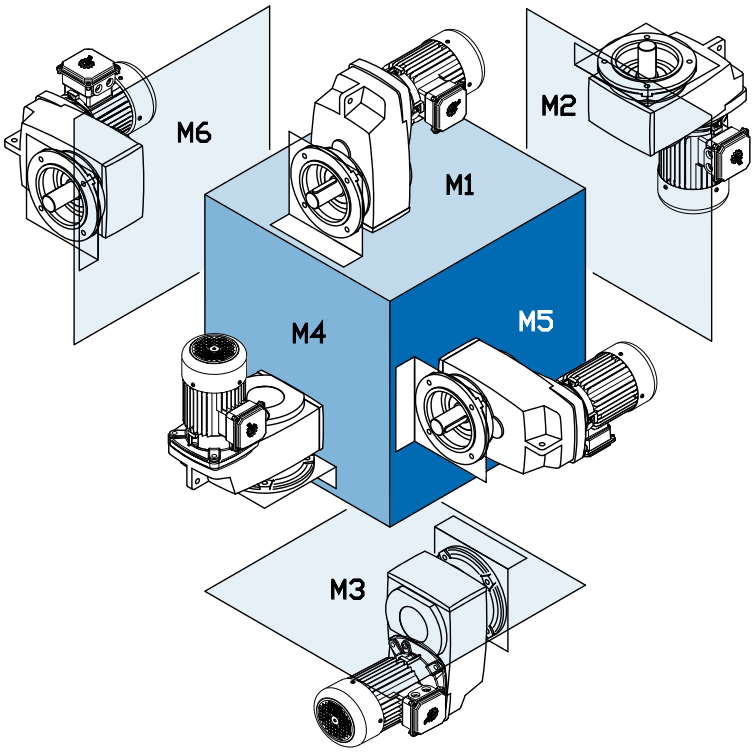


| Mounting Position | M1 | | M2 | | M3 | | M4 | | M5 | | M6 | |
|---|---|---|---|---|---|---|---|---|---|---|---|---|
| | Quarts | Liters | Quarts | Liters | Quarts | Liters | Quarts | Liters | Quarts | Liters | Quarts | Liters |
| SK0182NB | 0.42 | 0.40 | 0.58 | 0.55 | 0.63 | 0.60 | 0.58 | 0.55 | 0.37 | 0.35 | 0.37 | 0.35 |
| SK0282NB | 0.74 | 0.70 | 1.06 | 1.00 | 0.85 | 0.80 | 1.16 | 1.10 | 0.95 | 0.90 | 0.95 | 0.90 |
| SK1382NB | 1.37 | 1.30 | 2.43 | 2.30 | 1.48 | 1.40 | 2.22 | 2.10 | 2.11 | 2.00 | 2.01 | 1.90 |
| SK1282 | 0.95 | 0.90 | 1.37 | 1.30 | 0.95 | 0.90 | 1.27 | 1.20 | 1.00 | 0.95 | 1.00 | 0.95 |
| SK2282 | 1.74 | 1.65 | 2.54 | 2.40 | 2.01 | 1.90 | 2.11 | 2.00 | 1.90 | 1.80 | 1.90 | 1.80 |
| SK2382 | 1.80 | 1.70 | 2.75 | 2.60 | 2.01 | 1.90 | 3.28 | 3.10 | 1.59 | 1.50 | 1.59 | 1.50 |
| SK3282 | 3.33 | 3.15 | 4.33 | 4.10 | 3.44 | 3.25 | 4.33 | 4.10 | 3.33 | 3.15 | 3.33 | 3.15 |
| SK3382 | 4.33 | 4.10 | 5.18 | 4.90 | 3.49 | 3.30 | 5.92 | 5.60 | 3.49 | 3.30 | 3.49 | 3.30 |
| SK4282 | 4.97 | 4.70 | 6.45 | 6.10 | 5.02 | 4.75 | 5.71 | 5.40 | 4.97 | 4.70 | 4.97 | 4.70 |
| SK4382 | 6.24 | 5.90 | 7.19 | 6.80 | 5.18 | 4.90 | 8.77 | 8.30 | 5.18 | 4.90 | 5.18 | 4.90 |
| SK5282 | 7.93 | 7.50 | 9.30 | 8.80 | 7.93 | 7.50 | 9.30 | 8.80 | 7.61 | 7.20 | 7.61 | 7.20 |
| SK5382 | 13.2 | 12.5 | 12.7 | 12.0 | 7.08 | 6.70 | 14.8 | 14.0 | 8.77 | 8.30 | 8.77 | 8.30 |
| SK6282 | 18.0 | 17.0 | 14.8 | 14.0 | 12.7 | 12.0 | 18.5 | 17.5 | 10.6 | 10.0 | 14.8 | 14.0 |
| SK6382 | 17.4 | 16.5 | 13.7 | 13.0 | 10.1 | 9.60 | 19.0 | 18.0 | 14.8 | 14.0 | 13.2 | 12.5 |
| SK7282 | 26.4 | 25.0 | 22.2 | 21.0 | 21.1 | 20.0 | 28.5 | 27.0 | 16.9 | 16.0 | 22.2 | 21.0 |
| SK7382 | 23.3 | 22.0 | 21.1 | 20.0 | 16.9 | 16.0 | 26.4 | 25.0 | 24.3 | 23.0 | 20.1 | 19.0 |
| SK8282 | 39.1 | 37.0 | 34.9 | 33.0 | 31.7 | 30.0 | 43.3 | 41.0 | 32.8 | 31.0 | 32.8 | 31.0 |
| SK8382 | 35.9 | 34.0 | 33.8 | 32.0 | 26.4 | 25.0 | 40.2 | 38.0 | 37.0 | 35.0 | 31.7 | 30.0 |
| SK9282 | 78.2 | 74.0 | 74.0 | 70.0 | 58.1 | 55.0 | 76.1 | 72.0 | 63.4 | 60.0 | 62.4 | 59.0 |
| SK9382 | 77.2 | 73.0 | 74.0 | 70.0 | 47.6 | 45.0 | 78.2 | 74.0 | 68.7 | 65.0 | 63.4 | 60.0 |
| SK10282* | 95.1 | 90.0 | 95.1 | 90.0 | 42.3 | 40.0 | 95.1 | 90.0 | 63.4 | 60.0 | 86.7 | 82.0 |
| SK10382* | 89.8 | 85.0 | 106 | 100 | 77.2 | 73.0 | 106 | 100 | 84.6 | 80.0 | 84.6 | 80.0 |
| SK11282* | 174 | 165 | 169 | 160 | 153 | 145 | 206 | 195 | 106 | 100 | 148 | 140 |
| SK11382* | 169 | 160 | 164 | 155 | 148 | 140 | 222 | 210 | 164 | 155 | 143 | 135 |
| SK12382* | 169 | 160 | 164 | 155 | 148 | 140 | 222 | 210 | 164 | 155 | 143 | 135 |

* These units shipped without oil


Send Quote Requests to info@automatedpt.com
Call +1(800)985-6929 To Order or Order Online At Nordgearmotors.com

# Helical-Bevel Foot Mount Positions & Oil Fill Quantities



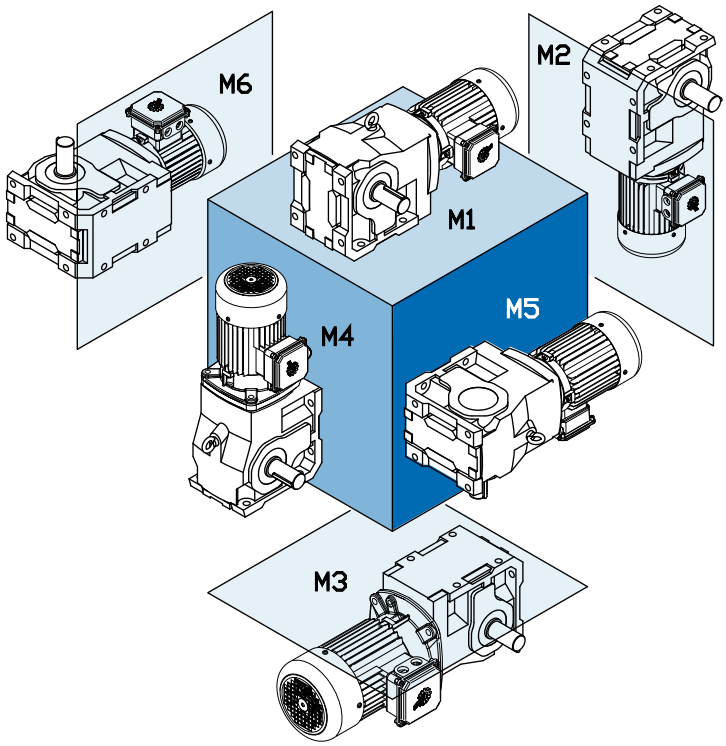


| Mounting Position | M1 | | M2 | | M3 | | M4 | | M5 | | M6 | |
|---|---|---|---|---|---|---|---|---|---|---|---|---|
| | Quarts | Liters | Quarts | Liters | Quarts | Liters | Quarts | Liters | Quarts | Liters | Quarts | Liters |
| SK92072 | 0.42 | 0.40 | 0.63 | 0.60 | 0.53 | 0.50 | 0.53 | 0.50 | 0.42 | 0.40 | 0.42 | 0.40 |
| SK92172 | 0.58 | 0.55 | 0.95 | 0.90 | 1.00 | 0.95 | 1.16 | 1.10 | 0.79 | 0.75 | 0.66 | 0.62 |
| SK92372 | 0.95 | 0.90 | 1.37 | 1.30 | 1.53 | 1.45 | 1.69 | 1.60 | 1.27 | 1.20 | 1.27 | 1.20 |
| SK92672 | 1.90 | 1.80 | 3.70 | 3.50 | 3.38 | 3.20 | 3.59 | 3.40 | 2.75 | 2.60 | 2.75 | 2.60 |
| SK92772 | 2.43 | 2.30 | 4.76 | 4.50 | 4.86 | 4.60 | 5.60 | 5.30 | 4.33 | 4.10 | 4.33 | 4.10 |
| SK9012.1 | 0.74 | 0.70 | 1.69 | 1.60 | 2.01 | 1.90 | 2.54 | 2.40 | 1.27 | 1.20 | 1.80 | 1.70 |
| SK9013.1 | 1.27 | 1.20 | 2.11 | 2.00 | 2.33 | 2.20 | 3.17 | 3.00 | 1.48 | 1.40 | 2.01 | 1.90 |
| SK9016.1 | 0.74 | 0.70 | 1.69 | 1.60 | 2.01 | 1.90 | 2.54 | 2.40 | 1.27 | 1.20 | 1.80 | 1.70 |
| SK9017.1 | 1.27 | 1.20 | 2.11 | 2.00 | 2.33 | 2.20 | 3.17 | 3.00 | 1.48 | 1.40 | 2.01 | 1.90 |
| SK9022.1 | 1.37 | 1.30 | 2.75 | 2.60 | 3.70 | 3.50 | 4.44 | 4.20 | 2.11 | 2.00 | 2.96 | 2.80 |
| SK9023.1 | 2.54 | 2.40 | 3.17 | 3.00 | 4.02 | 3.80 | 5.60 | 5.30 | 2.33 | 2.20 | 3.28 | 3.10 |
| SK9032.1 | 1.80 | 1.70 | 5.07 | 4.80 | 6.76 | 6.40 | 7.08 | 6.70 | 4.33 | 4.10 | 5.39 | 5.10 |
| SK9033.1 | 3.49 | 3.30 | 6.98 | 6.60 | 7.40 | 7.00 | 8.24 | 7.80 | 4.55 | 4.30 | 5.39 | 5.10 |
| SK9042.1 | 4.65 | 4.40 | 9.20 | 8.70 | 10.6 | 10.0 | 10.4 | 9.80 | 7.19 | 6.80 | 7.93 | 7.50 |
| SK9043.1 | 4.86 | 4.60 | 10.8 | 10.2 | 11.3 | 10.7 | 13.5 | 12.8 | 5.50 | 5.20 | 7.08 | 6.70 |
| SK9052.1 | 6.87 | 6.50 | 16.9 | 16.0 | 20.1 | 19.0 | 22.7 | 21.5 | 11.6 | 11.0 | 16.4 | 15.5 |
| SK9053.1 | 10.6 | 10.0 | 18.0 | 17.0 | 21.1 | 20.0 | 25.6 | 24.2 | 12.2 | 11.5 | 17.4 | 16.5 |
| SK9072.1 | 10.6 | 10.0 | 29.1 | 27.5 | 33.8 | 32.0 | 38.1 | 36.0 | 19.0 | 18.0 | 25.4 | 24.0 |
| SK9082.1 | 18.0 | 17.0 | 54.4 | 51.5 | 66.1 | 62.5 | 75.6 | 71.5 | 34.9 | 33.0 | 49.2 | 46.5 |
| SK9086.1 | 30.7 | 29.0 | 77.2 | 73.0 | 89.8 | 85.0 | 108 | 102 | 50.7 | 48.0 | 65.5 | 62.0 |
| SK9092.1 | 38.1 | 36.0 | 166 | 157 | 180 | 170 | 182 | 172 | 84.6 | 80.0 | 95.1 | 90.0 |
| SK9096.1* | 74.0 | 70.0 | 198 | 187 | 205 | 194 | 268 | 254 | 115 | 109 | 161 | 152 |

* These units shipped without oil


Send Quote Requests to info@automatedpt.com
Call +1(800)985-6929 To Order or Order Online At Nordgearmotors.com

Send Quote Requests to info@automatedpt.com
Call +1(800)985-6929 To Order or Order Online At Nordgearmotors.com



# Helical-Bevel Flange Mount Positions & Oil Fill Quantities

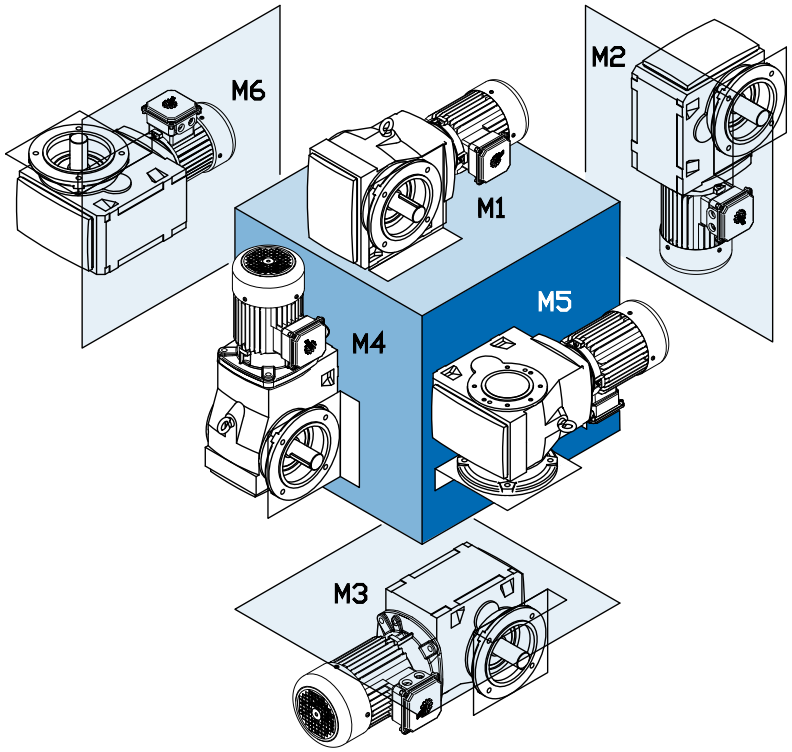


| Mounting Position | M1 | | M2 | | M3 | | M4 | | M5 | | M6 | |
|---|---|---|---|---|---|---|---|---|---|---|---|---|
| | Quarts | Liters | Quarts | Liters | Quarts | Liters | Quarts | Liters | Quarts | Liters | Quarts | Liters |
| **SK92072** | 0.42 | 0.40 | 0.63 | 0.60 | 0.53 | 0.50 | 0.53 | 0.50 | 0.42 | 0.40 | 0.42 | 0.40 |
| **SK92172** | 0.53 | 0.50 | 0.97 | 0.92 | 0.92 | 0.87 | 1.11 | 1.05 | 0.79 | 0.75 | 0.69 | 0.65 |
| **SK92372** | 1.22 | 1.15 | 1.59 | 1.50 | 1.27 | 1.20 | 1.80 | 1.70 | 1.22 | 1.15 | 1.22 | 1.15 |
| **SK92672** | 1.64 | 1.55 | 2.96 | 2.80 | 2.64 | 2.50 | 3.49 | 3.30 | 2.54 | 2.40 | 2.54 | 2.40 |
| **SK92772** | 2.91 | 2.75 | 4.65 | 4.40 | 4.76 | 4.50 | 4.76 | 4.50 | 3.70 | 3.50 | 3.70 | 3.50 |
| **SK9012.1** | 0.74 | 0.70 | 2.01 | 1.90 | 2.01 | 1.90 | 2.54 | 2.40 | 1.27 | 1.20 | 1.80 | 1.70 |
| **SK9013.1** | 1.27 | 1.20 | 2.43 | 2.30 | 2.33 | 2.20 | 3.17 | 3.00 | 1.48 | 1.40 | 2.01 | 1.90 |
| **SK9016.1** | 0.74 | 0.70 | 2.01 | 1.90 | 2.01 | 1.90 | 2.54 | 2.40 | 1.27 | 1.20 | 1.80 | 1.70 |
| **SK9017.1** | 1.27 | 1.20 | 2.43 | 2.30 | 2.33 | 2.20 | 3.17 | 3.00 | 1.48 | 1.40 | 2.01 | 1.90 |
| **SK9022.1** | 1.37 | 1.30 | 2.75 | 2.60 | 3.70 | 3.50 | 4.44 | 4.20 | 2.11 | 2.00 | 2.96 | 2.80 |
| **SK9023.1** | 2.54 | 2.40 | 3.17 | 3.00 | 4.02 | 3.80 | 5.60 | 5.30 | 2.33 | 2.20 | 3.28 | 3.10 |
| **SK9032.1** | 2.01 | 1.90 | 5.50 | 5.20 | 6.76 | 6.40 | 7.72 | 7.30 | 3.49 | 3.30 | 5.39 | 5.10 |
| **SK9033.1** | 4.02 | 3.80 | 6.02 | 5.70 | 7.29 | 6.90 | 8.98 | 8.50 | 3.81 | 3.60 | 5.92 | 5.60 |
| **SK9042.1** | 3.81 | 3.60 | 10.30 | 9.70 | 12.0 | 11.4 | 12.2 | 11.5 | 6.87 | 6.50 | 8.67 | 8.20 |
| **SK9043.1** | 6.02 | 5.70 | 10.8 | 10.2 | 15.5 | 14.7 | 15.5 | 14.7 | 6.98 | 6.60 | 10.1 | 9.60 |
| **SK9052.1** | 7.93 | 7.50 | 17.4 | 16.5 | 21.1 | 20.0 | 23.8 | 22.5 | 12.2 | 11.5 | 19.0 | 18.0 |
| **SK9053.1** | 13.2 | 12.5 | 19.0 | 18.0 | 22.7 | 21.5 | 28.0 | 26.5 | 13.7 | 13.0 | 18.0 | 17.0 |
| **SK9072.1** | 12.7 | 12.0 | 29.1 | 27.5 | 34.9 | 33.0 | 40.7 | 38.5 | 20.1 | 19.0 | 27.5 | 26.0 |
| **SK9082.1** | 22.2 | 21.0 | 57.1 | 54.0 | 69.8 | 66.0 | 84.6 | 80.0 | 40.2 | 38.0 | 55.0 | 52.0 |
| **SK9086.1** | 38.1 | 36.0 | 82.4 | 78.0 | 96.2 | 91.0 | 107 | 101 | 56.0 | 53.0 | 80.3 | 76.0 |
| **SK9092.1** | 42.3 | 40.0 | 137 | 130 | 163 | 154 | 185 | 175 | 86.7 | 82.0 | 96.2 | 91.0 |
| **SK9096.1*** | 74.0 | 70.0 | 198 | 187 | 204 | 193 | 272 | 257 | 119 | 113 | 165 | 156 |

* These units shipped without oil


Send Quote Requests to info@automatedpt.com
Call +1(800)985-6929 To Order or Order Online At Nordgearmotors.com

# Helical-Worm Foot Mount Positions & Oil Fill Quantities



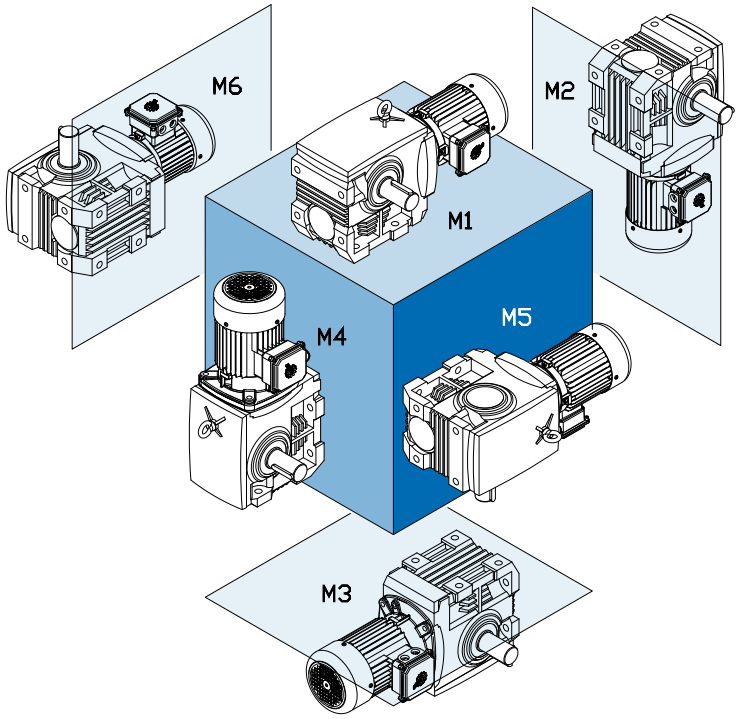


| Mounting Position | M1 | | M2 | | M3 | | M4 | | M5 | | M6 | |
|---|---|---|---|---|---|---|---|---|---|---|---|---|
| | Quarts | Liters | Quarts | Liters | Quarts | Liters | Quarts | Liters | Quarts | Liters | Quarts | Liters |
| **SK02040** | 0.48 | 0.45 | 0.63 | 0.60 | 0.63 | 0.60 | 0.63 | 0.60 | 0.53 | 0.50 | 0.53 | 0.50 |
| **SK02050** | 0.42 | 0.40 | 1.27 | 1.20 | 0.74 | 0.70 | 1.22 | 1.15 | 0.74 | 0.70 | 0.74 | 0.70 |
| **SK13050** | 1.00 | 0.95 | 1.64 | 1.55 | 1.16 | 1.10 | 1.53 | 1.45 | 1.00 | 0.95 | 1.00 | 0.95 |
| **SK12063** | 0.63 | 0.60 | 1.80 | 1.70 | 1.27 | 1.20 | 1.64 | 1.55 | 1.06 | 1.00 | 1.06 | 1.00 |
| **SK13063** | 0.90 | 0.85 | 2.43 | 2.30 | 1.69 | 1.60 | 2.11 | 2.00 | 1.32 | 1.25 | 1.32 | 1.25 |
| **SK12080** | 0.85 | 0.80 | 2.75 | 2.60 | 1.80 | 1.70 | 2.85 | 2.70 | 1.80 | 1.70 | 1.80 | 1.70 |
| **SK13080** | 1.80 | 1.70 | 3.38 | 3.20 | 2.22 | 2.10 | 3.59 | 3.40 | 2.06 | 1.95 | 2.06 | 1.95 |
| **SK32100** | 1.69 | 1.60 | 5.81 | 5.50 | 3.59 | 3.40 | 5.71 | 5.40 | 3.38 | 3.20 | 3.38 | 3.20 |
| **SK33100** | 2.22 | 2.10 | 8.03 | 7.60 | 4.23 | 4.00 | 7.19 | 6.80 | 3.91 | 3.70 | 3.91 | 3.70 |
| **SK42125** | 2.96 | 2.80 | 11.6 | 11.0 | 6.55 | 6.20 | 10.9 | 10.3 | 6.13 | 5.80 | 6.13 | 5.80 |
| **SK43125** | 8.24 | 7.80 | 14.8 | 14.0 | 7.61 | 7.20 | 14.3 | 13.5 | 7.08 | 6.70 | 7.08 | 6.70 |


Send Quote Requests to info@automatedpt.com
Call +1(800)985-6929 To Order or Order Online At Nordgearmotors.com

Send Quote Requests to info@automatedpt.com
Call +1(800)985-6929 To Order or Order Online At Nordgearmotors.com



# Helical-Worm Flange Mount Positions & Oil Fill Quantities

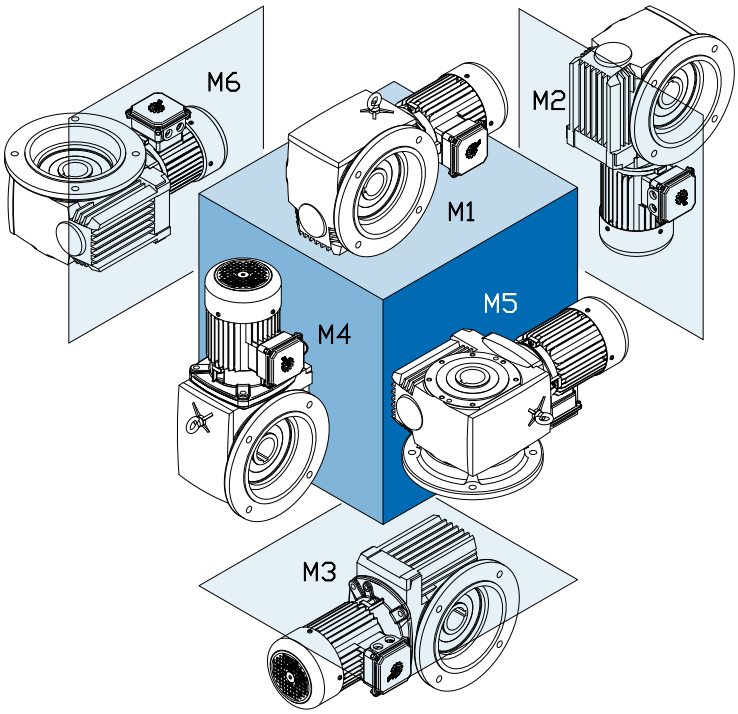


| Mounting Position | M1 | | M2 | | M3 | | M4 | | M5 | | M6 | |
|---|---|---|---|---|---|---|---|---|---|---|---|---|
| | Quarts | Liters | Quarts | Liters | Quarts | Liters | Quarts | Liters | Quarts | Liters | Quarts | Liters |
| **SK02040** | 0.53 | 0.50 | 0.85 | 0.80 | 0.79 | 0.75 | 0.63 | 0.60 | 0.53 | 0.50 | 0.53 | 0.50 |
| **SK02050** | 0.48 | 0.45 | 1.48 | 1.40 | 0.95 | 0.90 | 1.32 | 1.25 | 1.06 | 1.00 | 1.06 | 1.00 |
| **SK13050** | 0.95 | 0.90 | 1.90 | 1.80 | 1.22 | 1.15 | 1.85 | 1.75 | 1.32 | 1.25 | 1.32 | 1.25 |
| **SK12063** | 0.53 | 0.50 | 1.69 | 1.60 | 1.48 | 1.40 | 1.90 | 1.80 | 1.59 | 1.50 | 1.59 | 1.50 |
| **SK13063** | 1.00 | 0.95 | 2.22 | 2.10 | 1.74 | 1.65 | 2.27 | 2.15 | 1.85 | 1.75 | 1.85 | 1.75 |
| **SK12080** | 1.00 | 0.95 | 3.38 | 3.20 | 2.64 | 2.50 | 3.91 | 3.70 | 2.64 | 2.50 | 2.64 | 2.50 |
| **SK13080** | 1.48 | 1.40 | 4.44 | 4.20 | 2.91 | 2.75 | 4.44 | 4.20 | 2.91 | 2.75 | 2.91 | 2.75 |
| **SK32100** | 1.59 | 1.50 | 7.50 | 7.10 | 5.18 | 4.90 | 7.50 | 7.10 | 4.65 | 4.40 | 4.65 | 4.40 |
| **SK33100** | 2.43 | 2.30 | 8.03 | 7.60 | 5.81 | 5.50 | 8.24 | 7.80 | 5.13 | 4.85 | 5.13 | 4.85 |
| **SK42125** | 3.49 | 3.30 | 11.8 | 11.2 | 6.45 | 6.10 | 11.0 | 10.4 | 7.19 | 6.80 | 7.19 | 6.80 |
| **SK43125** | 4.55 | 4.30 | 13.6 | 12.9 | 7.50 | 7.10 | 12.8 | 12.1 | 8.14 | 7.70 | 8.14 | 7.70 |


Send Quote Requests to info@automatedpt.com
Call +1(800)985-6929 To Order or Order Online At Nordgearmotors.com

Send Quote Requests to info@automatedpt.com Call +1(800)985-6929 To Order or Order Online At Nordgearmotors.com



# Engineering OHL & Thrust

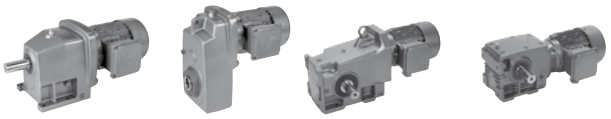

## OVERHUNG LOADS

Maximum values for output shaft loads are given in pounds of radial capacity as shown in the gearmotor selection pages under the $F_R$ column. Input shaft capacities are given on pages 58 - 59 as $F_{R1}$.

The listed maximum loads are

- to be applied at the midpoint of the shaft
- calculated in the least favorable loading direction
- without thrust loads.

Keeping the operational loads at or below the rated capacity will ensure bearing performance for approximately 5,000 hours of service or greater.

The permissible overhung load values listed are based on the least favorable loading direction. For higher overhung load values please contact NORD with the exact loading direction and life requirements.

## OHL CAPACITY FOR REDUCERS

If a C-face reducer or solid input shaft reducer is used, the Gearmotor Selection pages should be used to determine the maximum overhung load $F_Q$. Assign the HP value of the motor driving the system to the reducer. Turn to the Gearmotor Selection pages and match the HP, gear unit and ratio to one shown in the table. Select the OHL capacity ($F_Q$) from the appropriate column.

## CALCULATING OHL

When an in-line coupling is mounted on a shaft to connect power then no overhung load exists. However, if power transmission components such as sprockets or sheaves are mounted directly onto the shaft they will deliver a rotating load at a right angle to that shaft. The effective overhung load on that shaft will be determined as follows:

$$F_{OHL} = \frac{2 \times T \times f_z}{d_o}$$

Where:

$F_{OHL}$ = Calculated OHL on gearbox shaft [lb]
T = Load torque on shaft [lb-in]
$d_0$ = Pitch diameter of overhung component [in]
$f_z$ = Power transmission component factor

**Table for $f_Z$ factor**

| Transmission Component | Factor $f_z$ | Notes |
|---|---|---|
| Gear | 1.00 | 17 teeth or less |
| Gear | 1.15 | 18 teeth or more |
| Chain Sprocket | 1.40 | 13 teeth or less |
| Chain Sprocket | 1.20 | 13 to 20 teeth |
| Chain Sprocket | 1.00 | 21 teeth or more |
| Timing Belt Pulley | 1.50 | |
| V-Belt Pulley | 1.70 | |
| Flat Belt Pulley | 2.50 | |

After calculating OHL actual compare to the overhung load capacity found in the tables.

$$F_{OHL} \leq F_R \text{ or } F_{R1}$$

If $F_{OHL}$ exceeds the rated capacity ($F_R$ or $F_{R1}$) of the speed reducer, either heavy-duty bearings or a larger gearbox must be selected.

## LOAD NOT AT MIDPOINT OF SHAFT

If the load is not applied to the midpoint of the shaft, the maximum overhung load capacity $F_Q$ or $F_{Q1}$ must be modified. The new permissible overhung load $F_{QX}$ or $F_{Q1X}$ must be calculated at a point on the shaft (x) by

$$F_{RX} = \frac{F_R \times z}{y + x} \qquad F_{R1X} = \frac{F_{R1} \times z}{y + x}$$

Shaft strength must also be considered by these equations:

$$F_{RSS} = \frac{c}{f + x} \qquad F_{R1SS} = \frac{c}{f + x}$$

Where:

$F_R$ = permissible OHL from gearmotor tables [lb]
x = distance from shaft shoulder to the point where the load is applied [in]
c = factor from table [lb-in]
f = factor from table [in]
y = factor from table [in]
z = factor from table [in]
$F_{RX}$ = new permissible OHL at 'x' distance from output shaft shoulder [lb]
$F_{R1X}$ = new permissible OHL at 'x' distance from input shaft shoulder [lb]
$F_{RSS}$ = output shaft strength capacity [lb]
$F_{R1SS}$ = input shaft strength capacity [lb]

After calculating the above the lower of the two will be the adjusted permissible overhung load ($OHL_{adjusted}$) at 'x' distance from the shaft shoulder and is compared to the $F_{OHL}$ value.

$F_{OHL} \leq F_{RX}$

Unit sizing with this method takes into consideration non-midpoint load location and ensures acceptable bearing and shaft strength.

## THRUST LOADS

Loads that are directed towards or away from the gearbox along the axis of the shaft are considered to be AXIAL loads. Commonly this loading is called THRUST. Output shaft THRUST capacity (FA) can be found in the Gearmotor Selection tables adjacent to the OHL values. Input shaft capacity is given on pages 58 - 59 as $F_{A1}$:

- Capacity shown is the lowest value of either a load directed into or away from the unit.
- Loads cannot exceeded the values shown in the tables
- Capacity listed is for pure axial loads with no overhung load. If loads are kept at or below the rated capacity, reasonable bearing life can be expected. Contact NORD for combination load or a more exact examination of the application.


Send Quote Requests to info@automatedpt.com
Call +1(800)985-6929 To Order or Order Online At Nordgearmotors.com

DRIVESYSTEMS



# In-line Overhung Load Calculation Tables



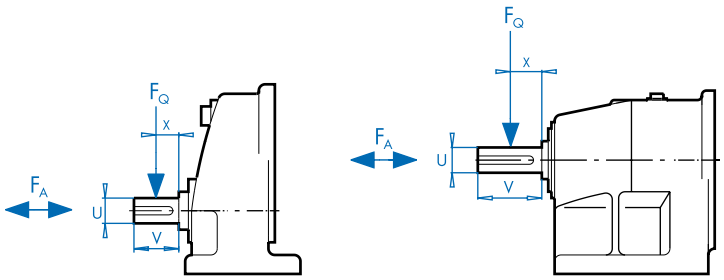


$F_{OHL}$ = Calculated OHL on gearbox shaft [lb]
T = Load torque on shaft [lb-in]
$d_o$ = Pitch diameter of overhung component [in]
$f_z$ = Power transmission component factor

$$F_{OHL} = \frac{2 \times T \times f_z}{d_o}$$

After calculating $F_{OHL}$ compare to the overhung load capacity found in the tables.

$F_{OHL} \leq F_R$ or $F_{R1}$

If $F_{OHL}$ exceeds the rated capacity ($F_R$ or $F_{R1}$) of the speed reducer then either heavy-duty bearings or a larger gearbox must be selected.

**Calculation Table for OHL at Output Shaft for In-line Units**

| Gearbox Type | y [in] | z [in] | c Standard Bearings [lb-in] | c VL Bearings [lb-in] | f [in] | U [in] | V [in] | $T_{2max}$ [lb-in] |
|---|---|---|---|---|---|---|---|---|
| SK 11E | 2.56 | 3.35 | * | * | 1.54 | 0.750 | 1.50 | 513 |
| SK 21E | 3.03 | 4.02 | * | * | 1.97 | 1.000 | 2.13 | 681 |
| SK 31E | 4.11 | 5.30 | * | * | 2.74 | 1.250 | 2.75 | 1637 |
| SK 41E | 4.39 | 5.77 | * | * | 2.64 | 1.375 | 3.00 | 2567 |
| SK 51E | 4.92 | 6.50 | * | * | 2.91 | 1.625 | 3.25 | 4354 |
| SK 02<br>SK 03 | 2.51 | 3.30 | 531 | 885 | 0.46 | 0.750 | 1.50 | 876<br>973 |
| SK 12<br>SK 13 | 2.89 | 3.88 | 1,062 | 1,593 | 0.55 | 1.000 | 2.13 | 1628<br>1717 |
| SK 22<br>SK 23 | 3.39 | 4.57 | 1,682 | 2,655 | 0.55 | 1.250 | 2.75 | 3310<br>3009 |
| SK 32<br>SK 33 | 4.43 | 6.00 | 3,452 | 5,310 | 1.18 | 1.625 | 3.25 | 6284<br>5947 |
| SK 42<br>SK 43 | 4.84 | 6.61 | 3,717 | 6,461 | 1.18 | 1.875 | 3.50 | 11,009<br>11,408 |
| SK 52<br>SK 53 | 5.89 | 8.05 | 8,142 | 13,806 | 1.38 | 2.250 | 4.00 | 17,912<br>19,753 |
| SK 62<br>SK 63 | 7.52 | 10.08 | 12,921 | 21,771 | 1.38 | 2.500 | 5.00 | 27,612<br>32,745 |
| SK 72<br>SK 73 | 8.35 | 11.10 | 18,851 | 39,383 | 1.46 | 3.000 | 5.50 | 41,666<br>50,003 |
| SK 82<br>SK 83 | 9.78 | 13.13 | 37,254 | 60,977 | 1.50 | 3.500 | 6.75 | 64,127<br>81,243 |
| SK 92<br>SK 93 | 10.94 | 15.08 | 71,420 | 110,625 | 1.61 | 4.250 | 8.50 | 95,359<br>123,900 |
| SK 102<br>SK 103 | 12.74 | 17.64 | 131,511 | 202,134 | 1.81 | 5.250 | 10.00 | 153,698<br>204,966 |

* - Consult Factory for calculation


Send Quote Requests to info@automatedpt.com
Call +1(800)985-6929 To Order or Order Online At Nordgearmotors.com

# Clincher™ Overhung Load Calculation Tables



DRIVESYSTEMS

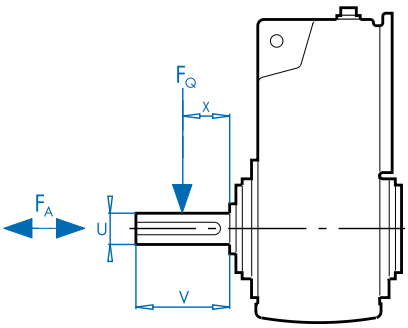


$F_{OHL}$ = Calculated OHL on gearbox shaft [lb]
T = Load torque on shaft [lb-in]
$d_0$ = Pitch diameter of overhung component [in]
$f_z$ = Power transmission component factor

$$F_{OHL} = \frac{2 \times T \times f_z}{d_o}$$

After calculating $F_{OHL}$ compare to the overhung load capacity found in the tables.

$F_{OHL} \leq F_R$ or $F_{R1}$

If $F_{OHL}$ exceeds the rated capacity ($F_R$ or $F_{R1}$) of the speed reducer then either heavy-duty bearings or a larger gearbox must be selected.

**Calculation Table for OHL at Output Shaft for Clincher™ Units**

| Gearbox Type | y [in] | z [in] | c Standard Bearings [lb-in] | c VL Bearings [lb-in] | f [in] | U [in] | V [in] | $T_{2max}$ [lb-in] |
|---|---|---|---|---|---|---|---|---|
| SK 0182NB | 3.15 | 4.11 | 1,151 | 1,593 | 0 | 0.750 | 1.50 | 1,027 |
| SK 0282NB | 4.41 | 5.43 | 1,062 | 1,505 | 0 | 1.000 | 2.13 | 1,460 |
| SK 1382NB | 5.71 | 6.93 | 1,416 | 2,301 | 0 | 1.250 | 2.75 | 3,275 |
| SK 1282 | 3.74 | 4.93 | 1,593 | – | 0 | 1.250 | 2.75 | 2,620 |
| SK 2282<br>SK 2382 | 4.31 | 5.69 | 2,390 | 3,894 | 0 | 1.375 | 2.75 | 4,983 |
| SK 3282<br>SK 3382 | 5.34 | 7.11 | 5,399 | 8,319 | 0 | 1.875 | 3.50 | 8,983<br>9,195 |
| SK 4282<br>SK 4382 | 6.22 | 8.39 | 7,965 | 13,098 | 0 | 2.250 | 4.00 | 17,700<br>18,381 |
| SK 5282<br>SK 5382 | 7.07 | 9.63 | 14,426 | 23,010 | 0 | 2.500 | 5.00 | 28,630<br>28,320 |
| SK 6282<br>SK 6382 | 9.28 | 12.03 | 16,107 | 30,267 | 0 | 3.000 | 5.50 | 40,152<br>53,100 |
| SK 7282<br>SK 7382 | 9.96 | 13.31 | 33,719 | 54,782 | 0 | 3.500 | 6.75 | 57,286<br>73,455 |
| SK 8282<br>SK 8392 | 11.81 | 15.94 | 73,544 | 113,192 | 0 | 4.250 | 8.50 | 93,969<br>116,820 |
| SK 9282<br>SK 9382 | 13.92 | 18.84 | 144,432 | 220,542 | 0 | 5.250 | 9.84 | 158,681<br>224,790 |
| SK 10282<br>SK 10382 | 16.73 | 22.64 | – | 167,708 | 0 | 6.250 | 11.81 | 283,200<br>329,220 |
| SK 11282<br>SK 11382 | 17.83 | 23.74 | – | 169,478 | 0 | 7.000 | 11.81 | 371,700<br>610,650 |
| SK 12382 | 17.83 | 23.74 | – | 179,655 | 0 | 7.000 | 11.81 | 796,500 |


Send Quote Requests to info@automatedpt.com
Call +1(800)985-6929 To Order or Order Online At Nordgearmotors.com

Send Quote Requests to info@automatedpt.com
Call +1(800)985-6929 To Order or Order Online At Nordgearmotors.com





# Helical-Bevel Overhung Load Calculation Tables

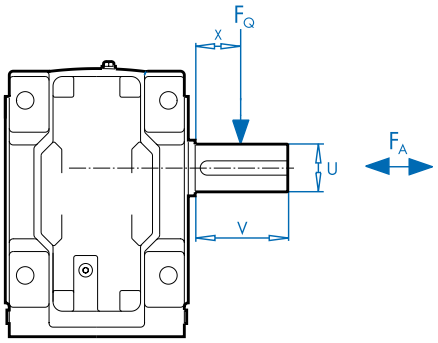


$F_{OHL}$ = Calculated OHL on gearbox shaft [lb]
T = Load torque on shaft [lb-in]
$d_0$ = Pitch diameter of overhung component [in]
$f_z$ = Power transmission component factor

$$F_{OHL} = \frac{2 \times T \times f_z}{d_o}$$

After calculating $F_{OHL}$ compare to the overhung load capacity found in the tables.

$F_{OHL} \leq F_R$ or $F_{R1}$

If $F_{OHL}$ exceeds the rated capacity ($F_R$ or $F_{R1}$) of the speed reducer then either heavy-duty bearings or a larger gearbox must be selected.

**Calculation Table for OHL at Output Shaft for Bevel Units**

| Gearbox Type | y [in] | z [in] | c Standard Bearings [lb-in] | c VL Bearings [lb-in] | f [in] | U [in] | V [in] | $T_{2max}$ [lb-in] |
|---|---|---|---|---|---|---|---|---|
| **SK 92072** | 3.74 | 4.53 | 531 | – | 0 | 0.750 | 1.50 | 797 |
| **SK 92172** | 4.37 | 5.16 | 443 | – | 0 | 0.750 | 1.50 | 1,062 |
| **SK 92372** | 5.04 | 6.02 | 708 | – | 0 | 1.000 | 2.13 | 2,036 |
| **SK 92672** | 5.35 | 6.54 | 1,062 | – | 0 | 1.000 | 2.75 | 3,363 |
| **SK 92772** | 6.02 | 7.32 | 1,416 | – | 0 | 1.375 | 3.00 | 5,841 |
| **SK 9012.1**<br>**SK 9013.1** | 4.37 | 5.55 | 1,239 | 2,124 | 0 | 1.250 | 2.36 | 3,540 |
| **SK 9016.1**<br>**SK 9017.1** | 4.37 | 5.75 | 2,213 | 3,629 | 0 | 1.250 | 2.76 | 5,399 |
| **SK 9022.1**<br>**SK 9023.1** | 5.67 | 7.05 | 1,505 | 2,655 | 0 | 1.375 | 2.76 | 7,611 |
| **SK 9032.1**<br>**SK 9033.1** | 6.75 | 8.52 | 2,567 | 5,133 | 0 | 1.750 | 3.54 | 13,718 |
| **SK 9042.1**<br>**SK 9043.1** | 7.13 | 9.49 | 10,797 | 17,162 | 0 | 2.375 | 4.72 | 24,780 |
| **SK 9052.1**<br>**SK 9053.1** | 9.33 | 12.09 | 15,488 | 27,258 | 0 | 2.875 | 5.51 | 42,480 |
| **SK 9072.1** | 11.06 | 14.41 | 39,737 | 62,393 | 0 | 3.625 | 6.69 | 75,225 |
| **SK 9082.1** | 12.86 | 17.00 | 73,986 | 113,457 | 0 | 4.375 | 8.27 | 115,050 |
| **SK 9086.1** | 16.61 | 20.75 | 84,606 | 138,060 | 0 | 4.750 | 8.27 | 177,000 |
| **SK 9092.1** | 20.28 | 25.20 | 127,440 | 217,799 | 0 | 5.500 | 9.84 | 283,200 |
| **SK 9096.1** | 21.65 | 27.95 | 431,239 | – | 0 | 5.500 | 12.60 | 442,500 |

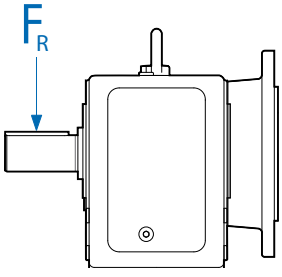


**CAUTION**

When gear units are flange mounted opposite shaft, their OHL capacity is greatly reduced compared to the standard catalog ratings. Please consult NORD for details on OHL ratings.


Send Quote Requests to info@automatedpt.com
Call +1(800)985-6929 To Order or Order Online At Nordgearmotors.com

# Helical-Worm Overhung Load Calculation Tables



DRIVESYSTEMS

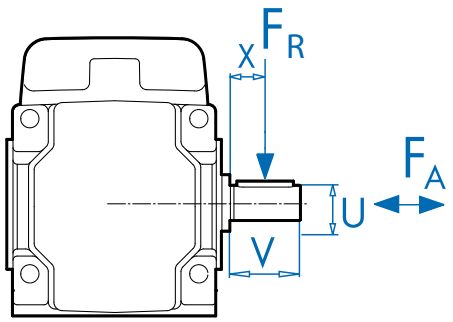


$F_{OHL}$ = Calculated OHL on gearbox shaft [lb]
T = Load torque on shaft [lb-in]
$d_0$ = Pitch diameter of overhung component [in]
$f_z$ = Power transmission component factor

$$F_{OHL} = \frac{2 \times T \times f_z}{d_o}$$

After calculating $F_{OHL}$ compare to the overhung load capacity found in the tables.

$F_{OHL} \leq F_R$ or $F_{R1}$

If $F_{OHL}$ exceeds the rated capacity ($F_R$ or $F_{R1}$) of the speed reducer then either heavy-duty bearings or a larger gearbox must be selected.

**Calculation Table for OHL at Output Shaft for Worm Units**

| Gearbox Type | y [in] | z [in] | c Standard Bearings [lb-in] | c VL Bearings [lb-in] | f [in] | U [in] | V [in] | $T_{2max}$ [lb-in] |
|---|---|---|---|---|---|---|---|---|
| **SK 02040** | 3.92 | 4.55 | 620 | – | 0 | 0.750 | 1.50 | 832 |
| **SK 02050** | 4.09 | 5.08 | 1,062 | 1,682 | 0 | 1.000 | 2.12 | 1,487 |
| **SK 13050** | | | | | | | | 1,584 |
| **SK 12063** | 4.67 | 5.85 | 1,682 | 2,655 | 0 | 0.250 | 2.75 | 3,115 |
| **SK 13063** | | | | | | | | 3,336 |
| **SK 12080** | 5.91 | 7.28 | 1,859 | 3,629 | 0 | 1.375 | 2.75 | 6,230 |
| **SK 13080** | | | | | | | | 6,744 |
| **SK 32100** | 7.05 | 8.82 | 4,514 | 8,319 | 0 | 1.875 | 3.50 | 12,558 |
| **SK 33100** | | | | | | | | 13,974 |
| **SK 42125** | 9.19 | 11.56 | 11,771 | 19,382 | 0 | 2.375 | 4.50 | 24,276 |
| **SK 43125** | | | | | | | | 27,063 |

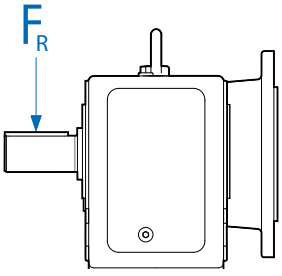


**CAUTION**

When gear units are flange mounted opposite shaft, their OHL capacity is greatly reduced compared to the standard catalog ratings. Please consult NORD for details on OHL ratings.


Send Quote Requests to info@automatedpt.com
Call +1(800)985-6929 To Order or Order Online At Nordgearmotors.com

Send Quote Requests to info@automatedpt.com
Call +1(800)985-6929 To Order or Order Online At Nordgearmotors.com



# Input Shaft Overhung Load Calculation Tables

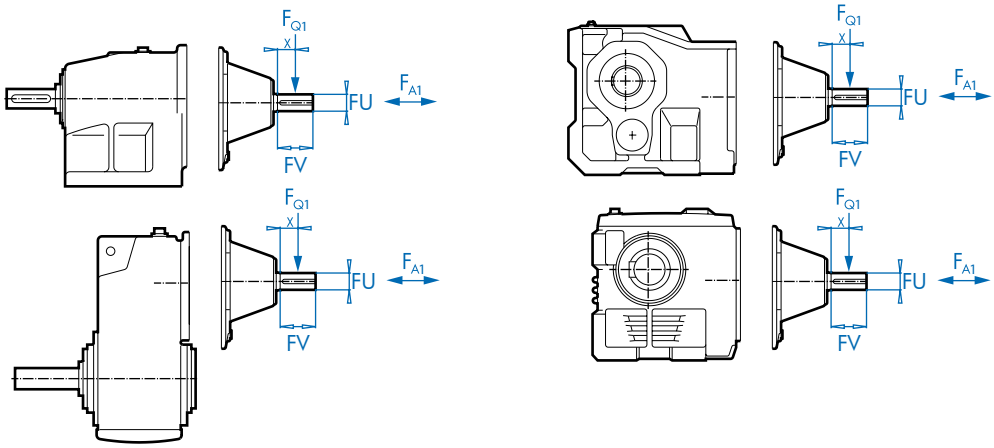


**Calculation Table for OHL at Input Shaft**

| Helical In-line Gearboxes | Clincher™ Gearboxes | Bevel Gearboxes | Worm Gearboxes | y [in] | z [in] | c [lb-in] | FU [in] | FV [in] |
|---|---|---|---|---|---|---|---|---|
| | SK 0182 NB<br>SK 0282 NB | SK 92072<br>SK 92172 | | 2.30 | 3.09 | 239 | 0.500 | 1.50 |
| | SK 1382 NB | SK 92372 | SK 02040 | 2.30 | 3.09 | 327 | 0.625 | 1.50 |
| | | SK 92672 | | 2.34 | 3.13 | 283 | 0.750 | 1.50 |
| | | SK 92772 | | 2.72 | 3.70 | 965 | 0.875 | 2.00 |
| SK 02<br>SK 03<br>SK 11E<br>SK 12<br>SK 13<br>SK 23<br>SK 33N | SK 1282<br>SK 2382<br>SK 3382 | SK 9012.1<br>SK 9013.1<br>SK 9016.1<br>SK 9017.1<br>SK 9022.1<br>SK 9023.1<br>SK 9033.1 | SK 02050<br>SK 12063<br>SK 12080<br>SK 13050<br>SK 13063<br>SK 13080<br>SK 33100 | 2.76 | 3.54 | 322 | 0.625 | 1.50 |
| SK 21E<br>SK 31E<br>SK 22<br>SK 32<br>SK 43<br>SK 53 | SK 2282<br>SK 3282<br>SK 4382<br>SK 5382 | SK 9032.1<br>SK 9043.1<br>SK 9053.1 | SK 32100<br>SK 43215 | 3.80 | 4.78 | 947 | 0.875 | 2.00 |
| SK 41E<br>SK 51E<br>SK 42<br>SK 52<br>SK 63 | SK 4282<br>SK 5282<br>SK 6382 | SK 9042.1<br>SK 9052.1 | SK 42125 | 4.35 | 5.93 | 4,160 | 1.500 | 3.12 |
| SK 62<br>SK 72<br>SK 73<br>SK 83<br>SK 93 | SK 6282<br>SK 7282<br>SK 7382<br>SK 8382<br>SK 9382 | SK 9072.1 | | 5.89 | 8.05 | 4,071 | 1.625 | 4.38 |
| SK 82<br>SK 92<br>SK 103 | SK 8282<br>SK 9282 | SK 9082.1<br>SK 9086.1<br>SK 9092.1 | | 8.17 | 10.93 | 16,107 | 2.500 | 5.50 |
| SK 102 | | | | 8.84 | 11.59 | 14,691 | 2.500 | 5.50 |
| | SK 10282<br>SK 10382<br>SK 11282<br>SK 11382<br>SK 12382 | | | 14.57 | 17.32 | Calculation Upon Request | 2.750 | 5.50 |


Send Quote Requests to info@automatedpt.com
Call +1(800)985-6929 To Order or Order Online At Nordgearmotors.com

# Input Shaft - W
# Overhung & Axial Loads



DRIVESYSTEMS

**Permissable Overhung ($F_{R1}$) & Axial (Thrust) ($F_{A1}$) Loads at Input Shaft [lbs]**

| Gearbox Type | | | | Maximum Overhung Loads $F_{Q1}$ and Axial Loads $F_{A1}$ | | | | | | | | | | | |
|---|---|---|---|---|---|---|---|---|---|---|---|---|---|---|---|
| Helical In-line Gear Units | Clincher™ Gear Units | Helical-bevel Gear Units | Worm Gear Units | | | | | | | | | | | | |
| | | | | **Power Pn [HP]** | | | | | | | | | | | |
| | | | | 0.16 | 0.25 | 0.33 | 0.50 | 0.75 | 1.00 | 1.50 | 2.00 | | | | |
| | SK 0182 NB | SK 92072 | | **FR1 [Lbs]** Application of load at midpoint of shaft | | | | | | | | | | | |
| | SK 0282 NB | SK 92172 | | 124 | 122 | 119 | 113 | 106 | 98 | 83 | 68 | | | | |
| | | | | **FA1 [Lbs]** | | | | | | | | | | | |
| | | | | 277 | 252 | 224 | 200 | 173 | 131 | 79 | 65 | | | | |
| | | | | **Power Pn [HP]** | | | | | | | | | | | |
| | | | | 0.16 | 0.25 | 0.33 | 0.50 | 0.75 | 1.00 | 1.50 | 2.00 | 3.00 | 5.00 | | |
| | SK 1382NB | SK92372 | SK 02040 | **FR1 [Lbs]** Application of load at midpoint of shaft | | | | | | | | | | | |
| | | | | 191 | 185 | 176 | 169 | 162 | 158 | 136 | 97 | 95 | 52 | | |
| | | | | **FA1 [Lbs]** | | | | | | | | | | | |
| | | | | 277 | 252 | 224 | 200 | 173 | 131 | 79 | 65 | 45 | 34 | | |
| | | | | **Power Pn [HP]** | | | | | | | | | | | |
| | | | | 0.16 | 0.25 | 0.33 | 0.50 | 0.75 | 1.00 | 1.50 | 2.00 | 3.00 | 5.00 | 7.50 | 10.0 |
| | | SK 92672 | | **FR1 [Lbs]** Application of load at midpoint of shaft | | | | | | | | | | | |
| | | | | 479 | 743 | 466 | 461 | 448 | 434 | 407 | 414 | 389 | 362 | 230 | 225 |
| | | | | **FA1 [Lbs]** | | | | | | | | | | | |
| | | | | 659 | 646 | 626 | 587 | 558 | 525 | 467 | 441 | 392 | 329 | 146 | 101 |
| | | | | **Power Pn [HP]** | | | | | | | | | | | |
| | | | | 0.16 | 0.25 | 0.33 | 0.50 | 0.75 | 1.00 | 1.50 | 2.00 | 3.00 | 5.00 | 7.50 | 10.0 |
| | | SK 92772 | | **FR1 [Lbs]** Application of load at midpoint of shaft | | | | | | | | | | | |
| | | | | 518 | 495 | 473 | 466 | 495 | 450 | 439 | 428 | 410 | 394 | 338 | 293 |
| | | | | **FA1 [Lbs]** | | | | | | | | | | | |
| | | | | 833 | 788 | 720 | 698 | 675 | 630 | 585 | 540 | 495 | 450 | 405 | 338 |
| SK 11E | | SK 9012.1 | SK 02050 | **Power Pn [HP]** | | | | | | | | | | | |
| SK 02 | | SK 9016.1 | SK 12063 | 0.16 | 0.25 | 0.33 | 0.50 | 0.75 | 1.00 | 1.50 | 2.00 | 3.00 | 5.00 | | |
| SK 12 | SK 1282 | SK 9022.1 | SK 12080 | **FR1 [Lbs]** Application of load at midpoint of shaft | | | | | | | | | | | |
| SK 03 | SK 2382 | SK 9013.1 | SK 13050 | 191 | 185 | 176 | 169 | 162 | 158 | 136 | 97 | 95 | 52 | | |
| SK 13 | SK 3382 | SK 9017.1 | SK 13063 | **FA1 [Lbs]** | | | | | | | | | | | |
| SK 23 | | SK 9023.1 | SK 13080 | 277 | 252 | 224 | 200 | 173 | 131 | 79 | 65 | 45 | 34 | | |
| SK 33N | | SK 9033.1 | SK 33100 | | | | | | | | | | | | |
| SK 21E | | | | **Power Pn [HP]** | | | | | | | | | | | |
| SK 31E | SK 2282 | SK 9032.1 | SK 32100 | 0.16 | 0.25 | 0.33 | 0.50 | 0.75 | 1.00 | 1.50 | 2.00 | 3.00 | 5.00 | 7.50 | 10.0 |
| SK 22 | SK 3282 | SK 9043.1 | SK 43125 | **FR1 [Lbs]** Application of load at midpoint of shaft | | | | | | | | | | | |
| SK 32 | SK 4382 | SK 9053.1 | | 479 | 473 | 466 | 461 | 448 | 434 | 407 | 414 | 389 | 362 | 230 | 225 |
| SK 43 | SK 5382 | | | **FA1 [Lbs]** | | | | | | | | | | | |
| SK 53 | | | | 659 | 646 | 626 | 587 | 558 | 525 | 467 | 441 | 392 | 329 | 146 | 61 |


Send Quote Requests to info@automatedpt.com
Call +1(800)985-6929 To Order or Order Online At Nordgearmotors.com



# Input Shaft - W
# Overhung & Axial Loads



**Permissable Overhung ($F_{R1}$) & Axial (Thrust) ($F_{A1}$) Loads at Input Shaft [lbs]**

| Gearbox Type | | | | Maximum Overhung Loads $F_{Q1}$ and Axial Loads $F_{A1}$ | | | | | | | | | | | | |
|---|---|---|---|---|---|---|---|---|---|---|---|---|---|---|---|---|
| Helical In-line Gear Units | Clincher™ Gear Units | Helical-bevel Gear Units | Worm Gear Units | | | | | | | | | | | | | |
| SK 41E | | | | **Power Pn [HP]** | | | | | | | | | | | | |
| SK 51E | | | | 0.50 | 0.75 | 1.00 | 1.50 | 2.00 | 3.00 | 5.00 | 7.50 | 10.0 | 15.0 | | | |
| SK 42 | SK 4282 | SK 9042.1 | SK 42125 | **FR1 [Lbs]** Application of load at midpoint of shaft | | | | | | | | | | | | |
| SK 52 | SK 5282 | SK 9052.1 | | 470 | 626 | 538 | 603 | 585 | 547 | 518 | 407 | 281 | 106 | | | |
| SK 63 | SK 6382 | | | **FA1 [Lbs]** | | | | | | | | | | | | |
| | | | | 911 | 874 | 853 | 794 | 738 | 601 | 560 | 367 | 308 | 133 | | | |
| SK 62 | SK 6282 | | | **Power Pn [HP]** | | | | | | | | | | | | |
| SK 72 | SK 7282 | | | 1.00 | 1.50 | 2.00 | 3.00 | 5.00 | 7.50 | 10.0 | 15.0 | 20.0 | 25.0 | 30.0 | 40.0 | 50.0 |
| SK 73 | SK 7382 | SK 9062.1 | | **FR1 [Lbs]** Application of load at midpoint of shaft | | | | | | | | | | | | |
| SK 83 | SK 8382 | | | 995 | 965 | 950 | 911 | 873 | 774 | 756 | 617 | 605 | 524 | 412 | 275 | 196 |
| SK 93 | SK 9382 | | | **FA1 [Lbs]** | | | | | | | | | | | | |
| | | | | 1377 | 1323 | 1296 | 1238 | 1168 | 997 | 968 | 743 | 738 | 610 | 505 | 252 | 167 |
| | | | | **Power Pn [HP]** | | | | | | | | | | | | |
| | | | | 5.00 | 7.50 | 10.0 | 15.0 | 20.0 | 25.0 | 30.0 | 40.0 | 50.0 | 60.0 | 75.0 | 100 | 125 |
| SK 82 | SK 8282 | SK 9082.1 | | **FR1 [Lbs]** Application of load at midpoint of shaft | | | | | | | | | | | | |
| SK 92 | SK 9282 | SK 9086.1 | | 2480 | 2421 | 2336 | 2219 | 2144 | 2102 | 2093 | 1897 | 1827 | 1868 | 1667 | 1038 | 1177 |
| SK 102 | SK 10382 | SK 9092.1 | | **FA1 [Lbs]** | | | | | | | | | | | | |
| | | | | 972 | 914 | 848 | 758 | 698 | 668 | 659 | 513 | 459 | 488 | 335 | 176 | 54 |
| | SK 10282 | | | **Power Pn [HP]** | | | | | | | | | | | | |
| | SK 10382 | | | 15.0 | 20.0 | 25.0 | 30.0 | 40.0 | 50.0 | 60.0 | 75.0 | 100 | 125 | 150 | 200 | |
| | SK 11282 | | | **FR1 [Lbs]** Application of load at midpoint of shaft | | | | | | | | | | | | |
| | SK 11382 | | | 3902 | 3845 | 3796 | 2624 | 3632 | 3530 | 3413 | 3265 | 2959 | 2723 | 2401 | 1544 | |
| | SK 12382 | | | **FA1 [Lbs]** | | | | | | | | | | | | |
| | | | | 3013 | 3078 | 3020 | 2957 | 2815 | 2696 | 2630 | 2471 | 2156 | 1922 | 1602 | 1130 | |


Send Quote Requests to info@automatedpt.com
Call +1(800)985-6929 To Order or Order Online At Nordgearmotors.com

# Reducer Tolerances



DRIVESYSTEMS

| Solid Shaft Diameter Tolerance [in] | | |
|---|---|---|
| > 0.375 | ≤ 1.750 | +0.0000 / -0.0005 |
| > 1.750 | ≤ 7.500 | +0.0000 / -0.0010 |

**All Keys and Keyways:** Inch - ANSI B17

| Solid Shaft Diameter Tolerance [mm] | | |
|---|---|---|
| > 10 | ≤ 18 | +0.012 / +0.001 |
| > 18 | ≤ 30 | +0.015 / +0.002 |
| > 30 | ≤ 50 | +0.018 / +0.002 |
| > 50 | ≤ 80 | +0.030 / +0.011 |
| > 80 | ≤ 120 | +0.035 / +0.013 |
| > 120 | ≤ 180 | +0.040 / +0.015 |
| > 180 | ≤ 190 | +0.046 / +0.017 |

**All Keys and Keyways:** Metric - DIN 6885, class m6

| Solid Shaft Drill & Tap Shaft End - Threaded Holes [in] | | |
|---|---|---|
| > ø 0.375 | ≤ ø 0.500 | 10-24 x 0.43 |
| > ø 0.500 | ≤ ø 0.875 | 1/4-20 x 0.59 |
| > ø 0.875 | ≤ ø 0.938 | 5/16-18 x 0.71 |
| > ø 0.938 | ≤ ø 1.100 | 3/8-16 x 0.87 |
| > ø 1.100 | ≤ ø 1.300 | 1/2-13 x 1.10 |
| > ø 1.300 | ≤ ø 1.875 | 5/8-11 x 1.42 |
| > ø 1.875 | ≤ ø 3.500 | 3/4-10 x 1.73 |
| > ø 3.500 | ≤ ø 7.500 | 1-8 x 2.63 |
| > ø 5.125 | ≤ ø 8.875 | 1 1/4-7 x 3.15* |
| > ø 6.000 | ≤ ø 8.875 | 1 3/8-6 x 3.46** |

* **Only used on the SK9096.1 Helical-Bevel Gear Unit**

** **Only used on the SK10382.1 & SK11382.1 CLINCHER Gear Unit**

| Solid Shaft Drill & Tap Shaft End - Threaded Holes [mm] | | |
|---|---|---|
| > ø 10 | ≤ ø 13 | M4 x 10 |
| > ø 13 | ≤ ø 16 | M5 x 12.5 |
| > ø 16 | ≤ ø 21 | M6 x 16 |
| > ø 21 | ≤ ø 24 | M8 x 19 |
| > ø 24 | ≤ ø 30 | M10 x 22 |
| > ø 30 | ≤ ø 38 | M12 x 28 |
| > ø 38 | ≤ ø 50 | M16 x 36 |
| > ø 50 | ≤ ø 85 | M20 x 42 |
| > ø 85 | ≤ ø 130 | M24 x 50 |
| > ø 130 | ≤ ø 190 | M30 x 60 |

| Keyed Hollow Bore Tolerances [in] | | |
|---|---|---|
| > ø 0.4375 | ≤ ø 1.6250 | +0.0010 / -0.0000 |
| > ø 1.6250 | ≤ ø 3.2500 | +0.0012 / -0.0000 |
| > ø 3.2500 | ≤ ø 7.0000 | +0.0014 / -0.0000 |

| Keyed Hollow Bore Tolerances [mm] | | |
|---|---|---|
| > ø 10 | ≤ ø 18 | +0.018 / -0.000 |
| > ø 18 | ≤ ø 30 | +0.021 / -0.000 |
| > ø 30 | ≤ ø 50 | +0.025 / -0.000 |
| > ø 50 | ≤ ø 80 | +0.030 / -0.000 |
| > ø 80 | ≤ ø 120 | +0.035 / -0.000 |
| > ø 120 | ≤ ø 180 | +0.040 / -0.000 |
| > ø 180 | ≤ ø 190 | +0.035 / -0.000 |

**Metric hollow bore tolerances per ISO286-2, Class H7**

| Suggested Solid Shaft Tolerances for Keyed Hollow Bore [in] | | | |
|---|---|---|---|
| | | Uniform Load | Shock Load |
| > ø 0.4375 | ≤ ø 0.8750 | +0.0000 / -0.0005 | +0.0000 / -0.0005 |
| > ø 0.8750 | ≤ ø 4.5000 | +0.0000 / -0.0010 | +0.0000 / -0.0010 |
| > ø 4.5000 | ≤ ø 7.0000 | +0.0000 / -0.0012 | +0.0000 / -0.0015 |

| Suggested Solid Shaft Tolerances for Keyed Hollow Bore [mm] | | | |
|---|---|---|---|
| | | Uniform Load ❶ | Shock Load ❷ |
| > ø 10 | ≤ ø 18 | +0.000 / -0.011 | +0.012 / +0.001 |
| > ø 18 | ≤ ø 30 | +0.000 / -0.013 | +0.015 / +0.002 |
| > ø 30 | ≤ ø 50 | +0.000 / -0.016 | +0.018 / +0.002 |
| > ø 50 | ≤ ø 80 | +0.000 / -0.019 | +0.021 / +0.002 |
| > ø 80 | ≤ ø 120 | +0.000 / -0.022 | +0.025 / +0.003 |
| > ø 120 | ≤ ø 180 | +0.000 / -0.025 | +0.028 / +0.003 |
| > ø 180 | ≤ ø 190 | +0.000 / -0.029 | +0.033 / +0.004 |

❶ **Uniform load: Mating shaft diameter tolerance per ISO286-2, class h6**

❷ **Shock load: Mating shaft diameter tolerance per ISO286-2, class k6**

| Customer Shaft Diameter Tolerance w/ Shrink Disk [in] | | | |
|---|---|---|---|
| Shaft Diameter | | Shaft Tolerance ❶ | Bore Tolerance ❷ |
| ≥ ø 0.4375 | ≤ ø 0.6875 | +0.0000 / -0.0004 | +0.0007 / -0.0000 |
| ≥ ø 0.7500 | ≤ ø 1.1250 | +0.0000 / -0.0005 | +0.0008 / -0.0000 |
| ≥ ø 1.1250 | ≤ ø 1.9375 | +0.0000 / -0.0006 | +0.0009 / -0.0000 |
| ≥ ø 2.0000 | ≤ ø 3.1250 | +0.0000 / -0.0007 | +0.0011 / -0.0000 |
| ≥ ø 3.1875 | ≤ ø 4.6875 | +0.0000 / -0.0008 | +0.0013 / -0.0000 |
| ≥ ø 4.7500 | ≤ ø 7.0625 | +0.0000 / -0.0009 | +0.0015 / -0.0000 |
| ≥ ø 7.1250 | ≤ ø 7.5000 | +0.0000 / -0.0011 | +0.0018 / -0.0000 |

❶ **Inch Shaft Tolerances per ISO286-2, Class h6**

❷ **Inch hollow bore tolerances per ISO286-2, Class H7**

• **Solid Shaft finish to be 125 micro inches (3.2mm) or smoother**

| Customer Shaft Diameter Tolerance w/ Shrink Disk [mm] | | | |
|---|---|---|---|
| Shaft Diameter | | Shaft Tolerance ❶ | Bore Tolerance ❷ |
| > ø 10 | ≤ ø 18 | +0.000 / -0.011 | +0.018 / -0.000 |
| > ø 18 | ≤ ø 30 | +0.000 / -0.013 | +0.021 / -0.000 |
| > ø 30 | ≤ ø 50 | +0.000 / -0.016 | +0.025 / -0.000 |
| > ø 50 | ≤ ø 80 | +0.000 / -0.019 | +0.030 / -0.000 |
| > ø 80 | ≤ ø 120 | +0.000 / -0.022 | +0.035 / -0.000 |
| > ø 120 | ≤ ø 180 | +0.000 / -0.025 | +0.040 / -0.000 |
| > ø 180 | ≤ ø 190 | +0.000 / -0.029 | +0.046 / -0.000 |

❶ **Metric Shaft Tolerances per ISO286-2, Class h6**

❷ **Metric hollow bore tolerances per ISO286-2, Class H7**

• **Solid Shaft finish to be 125 micro inches (3.2mm) or smoother**

| Flange Pilot (AK or AK1) Tolerance [in] | | | |
|---|---|---|---|
| Flange Pilot Diameter | | Pilot Tolerance | Fit Class ❶ |
| > ø 1.969 | ≤ ø 3.150 | +0.0005 / -0.0003 | j6 |
| > ø 3.150 | ≤ ø 4.724 | +0.0005 / -0.0004 | j6 |
| > ø 4.724 | ≤ ø 7.087 | +0.0006 / -0.0004 | j6 |
| > ø 7.087 | ≤ ø 9.055 | +0.0006 / -0.0005 | j6 |
| > ø 9.055 | ≤ ø 9.843 | +0.0000 / -0.0011 | h6 |
| > ø 9.843 | ≤ ø 12.402 | +0.0000 / -0.0013 | h6 |
| > ø 12.402 | ≤ ø 15.748 | +0.0000 / -0.0014 | h6 |
| > ø 15.748 | ≤ ø 19.685 | +0.0000 / -0.0016 | h6 |

❶ **Inch Pilot Tolerances per ISO286-2**

| Flange Pilot (AK or AK1) Tolerance [mm] | | | |
|---|---|---|---|
| Flange Pilot Diameter | | Pilot Tolerance | Fit Class ❶ |
| > ø 50 | ≤ ø 80 | +0.012 / -0.007 | j6 |
| > ø 80 | ≤ ø 120 | +0.013 / -0.009 | j6 |
| > ø 120 | ≤ ø 180 | +0.014 / -0.011 | j6 |
| > ø 180 | ≤ ø 230 | +0.016 / -0.013 | j6 |
| > ø 230 | ≤ ø 250 | +0.000 / -0.029 | h6 |
| > ø 250 | ≤ ø 315 | +0.000 / -0.032 | h6 |
| > ø 315 | ≤ ø 400 | +0.000 / -0.036 | h6 |
| > ø 400 | ≤ ø 500 | +0.000 / -0.040 | h6 |

❶ **Metric Pilot Tolerances per ISO286-2**

**Casting Surfaces may differ slightly (approximately 0.125 inches or 3.2mm) from the specified nominal dimensions as a result of the manufacturing process**



Send Quote Requests to info@automatedpt.com
Call +1(800)985-6929 To Order or Order Online At Nordgearmotors.com

Send Quote Requests to info@automatedpt.com
Call +1(800)985-6929 To Order or Order Online At Nordgearmotors.com





# Engineering Conversions & Formulas



## Metric ⇒ Inch

| Multiply | By | To Obtain |
|---|---|---|
| Gram [g] | x 0.0353 | = oz |
| Kilogram [kg] | x 2.205 | = lb |
| Newton [N] | x 0.2248 | = lb |
| Newton meter [Nm] | x 8.851 | = lb-in |
| Newton meter [Nm] | x 0.7375 | = lb-ft |
| Inertia [kgm$^2$] | x 23.75 | = lb-ft$^2$ |
| Kilowatt [kW] | x 1.341 | = hp |
| Meter [m] | x 39.4 | = in |
| Meter [m] | x 3.281 | = ft |
| Meter [m] | x 1.094 | = yd |
| Millimeter [mm] | x 0.0391 | = in |
| Centimeter [cm] | x 0.394 | = in |
| Cubic Centimeter [cm$^3$] | x 0.061 | = in$^3$ |
| Liter [l] | x 61.023 | = in$^3$ |
| Liter [l] | x 1.057 | = qt |
| Liter [l] | x 0.2642 | = gal |

## Inch ⇒ Metric

| Multiply | By | To Obtain |
|---|---|---|
| Ounce [oz] | x 28.35 | = g |
| Pound [lb] | x 0.454 | = kg |
| Ounce [oz] | x 0.028 | = kg |
| Pound [lb] | x 4.448 | = N |
| Pound-Inch [lb-in] | x 0.113 | = Nm |
| Pound Feet [lb-ft] | x 1.3558 | = Nm |
| Pound Feet Squared [lb-ft$^2$] | x 0.0421 | = kgm$^2$ |
| Horsepower [hp] | x 0.746 | = kW |
| Feet [ft] | x 0.3048 | = kW |
| Yard [yd] | x 0.9144 | = m |
| Inch [in] | x 25.4 | = mm |
| Inch [in] | x 2.54 | = cm |
| Inch [in] | x 0.0254 | = m |
| Cubic Inch [in$^3$] | x 16.39 | = cm$^3$ |
| Cubic Inch [in$^3$] | x 0.016 | = liters |
| Gallon [gal] | x 3.785 | = liters |

## Temperature

°F = 1.8 °C + 32
°C = 0.5555 x (°F - 32)
°C = °K - 273.16

## Linear Velocity

| | | |
|---|---|---|
| Miles per Hour [mph] | x 88 | = ft/min [fpm] |
| Miles per Hour [mph] | x 1.4677 | = ft/sec [fps] |
| Feet per Minute [fpm] | x 0.3048 | = m/min |
| Feet per Minute [fpm] | x 0.00508 | = m/sec |
| Meter per Minute [m/min] | x 3.2808 | = ft/min [fpm] |
| Meter per Second [m/sec] | x 196.85 | = ft/min [fpm] |

## Power

$$hp = \frac{\text{Torque (lb-in) x rpm}}{63025}$$

$$hp = \frac{\text{Torque (lb-ft) x rpm}}{5252}$$

$$hp_{(Lift)} = \frac{\text{Wgt (lb) x fpm}}{33000 \times \text{Efficiency}}$$

$$hp_{(Slide)} = \frac{\text{Wgt (lb) x } \mu \text{ x fpm}}{33000 \times \text{Efficiency}}$$

## Torque

$$T_{(lb\text{-}in)} = \frac{hp \times 63025}{rpm}$$

$$T_{(lb\text{-}ft)} = \frac{hp \times 5252}{rpm}$$

## Linear & Rotational Speed

$$fpm = 0.2618 \times Dia_{(in)} \times rpm$$

$$rpm = \frac{fpm \times 3.820}{Dia_{(in)}}$$

## Electric Motor 3-phase

$$hp_{(3ph\text{-}motor)} = \frac{1.732 \times V \times I \times PF \times Efficiency}{746}$$

## Metric M Threads

For metric "M" threads, it is customary to omit the thread pitch for coarse threads. For example, if a thread is called out as an M8 with no pitch shown, it is automatically a coarse pitch thread.

| Coarse threads and pitch |
|---|
| M6 x 1 |
| M8 x 1.25 |
| M10 x 1.5 |
| M12 x 1.75 |
| M16 x 2 |
| M20 x 2.5 |
| M24 x 3 |


Send Quote Requests to info@automatedpt.com
Call +1(800)985-6929 To Order or Order Online At Nordgearmotors.com

# Engineering NORD Service Factor



## Mass Acceleration Service Factor

The mass acceleration factor ($m_{af}$) uses a ratio of the load inertia to motor inertia. This method of service factor calculation can be used for both gearmotors and speed reducers and is valid for helical and helical-bevel gear units. For helical-worm units additional factors will need to be taken into account including an ambient temperature factor and duty cycle factor.

Short-term and infrequent torque impulses significantly influence the load and selection of a gear unit. The gear unit service factor, $f_B$, takes this and other affects on the gear unit into account.

The mass acceleration factor, $m_{af}$, represents the relationship between external low-speed output side and high-speed input side masses. The mass acceleration factor significantly influences the level of torque impulses in the gear unit upon start-up and braking procedures, and upon vibration. The external mass moments of inertia also include the load, such as the material transported on conveyor belts. We ask you to consult with NORD if the $m_{af} > 10$, if there is a large play in transfer elements, vibration in the system, uncertainty regarding the load classification, or you are in doubt.

For applications with relatively high external mass moments of inertia, $m_{af} > 2$ (i.e. travel drives, slewing gears, rotary tables, gear drives, agitators, and surface aerators), we recommend breaking torque that does not exceed 1.2 times the rated motor torque. If a higher breaking torque is to be used, this must be considered when selecting the gear unit.

1. Calculate mass acceleration factor:

$$m_{af} = \frac{J_{load}}{J_{motor}} \times \left( \frac{1}{\text{reducer ratio}} \right)^2$$

$J_{load}$ = External load inertia including all components of the system outside of the reducer

$J_{motor}$ = Motor inertia.
For NORD motors see pages 712 - 718

**If $m_{af} \leq 0.25$ use curve A (uniform operation)**
Light conveyor screws, fans, assembly lines, light conveyor belts, small agitators, elevators, cleaning machines, filling machines, inspection machines, belt conveyors.

**If $\leq 0.25$ $m_{af} \leq 3.00$ use curve B (moderate shocks)**
Coilers, feed-mechanism drivers for woodworking machines, dumbwaiters, balancing machines, thread cutting machines, medium-sized agitators and mixers, heavy conveyor belts, winches, sliding doors, manure scrapers, packing machines, concrete mixers, overhead crane traveling mechanisms, mills, bending machines, gear pumps.

**If $3.01 \leq m_{af}$ 10.00 use curve C (heavy shocks)**
Heavy mixers, shears, presses, centrifuges, rolling stands, heavy winches and lifts, grinding mills, stone crushers, bucket elevators, punching machines, hammer mills, eccentric presses, folding machines, roller tables, tumbling barrels, vibrators, shredders.

2. Determine the cycles/hour. A cycle is a start or hard stop, where a hard stop decelerates the motion of the system when a mechanical brake is activated.

3. Determine the run time in hours/day.

4. Using the chart; locate the cycles/hour on the horizontal axis and move vertically up to intersect curve A, B, or C based on the $m_{af}$. From the intersection point, move horizontally left to the service factor $f_B$ based on the run time in hours/day.

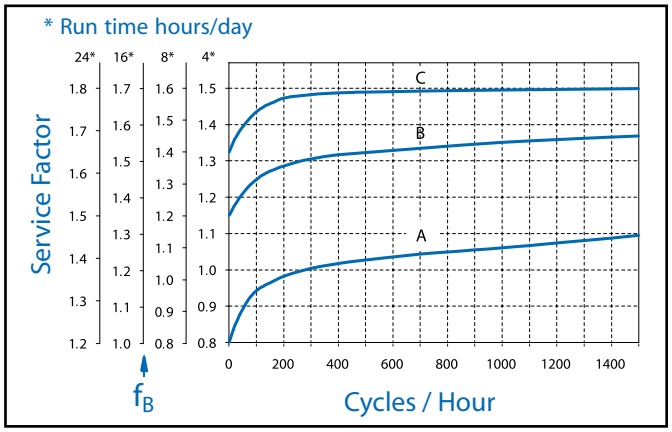


**EXAMPLE for Inline, Shaft mount, or Bevel gearmotor:**

A smooth running conveyor operates 24 hours/day with 500 cycles/hour. The calculated $m_{af} = 0.16$, therefore use curve A for this type of application.

From the chart, find 500 cycles/hour and follow the axis vertically up until you intersect curve A. From the intersection point, move horizontally left to find the service factor $f_B = 1.4$ based on 24 hours/day operation. Consult the selection pages of the catalog to find a gearmotor with a service factor $f_B = 1.4$ or greater.


Send Quote Requests to info@automatedpt.com
Call +1(800)985-6929 To Order or Order Online At Nordgearmotors.com

Send Quote Requests to info@automatedpt.com Call +1(800)985-6929 To Order or Order Online At Nordgearmotors.com



**EXAMPLE for Helical-worm gearmotor:**

A coiler operates 16 hours/day with 300 cycles/hour with a calculated $m_{af}$ = 2.5. Ambient temperature is 120°F and the unit operates 18 minutes per hour.

From the chart, find 300 cycles/hour and follow the axis vertically up until you intersect curve B. From the intersection point, move horizontally left to find the service factor $f_B$ = 1.5 based on 16 hours/day operation.

The service factor $f_B$ for helical-worms must be modified for the ambient temperature factor $f_{B1}$ and duty cycle factor $f_{B2}$.

The combined service factor
$f_{Bcombined} = f_B \times f_{B1} \times f_{B2}$

To find the ambient temperature factor $f_{B1}$ use the following chart based on ambient temperature.

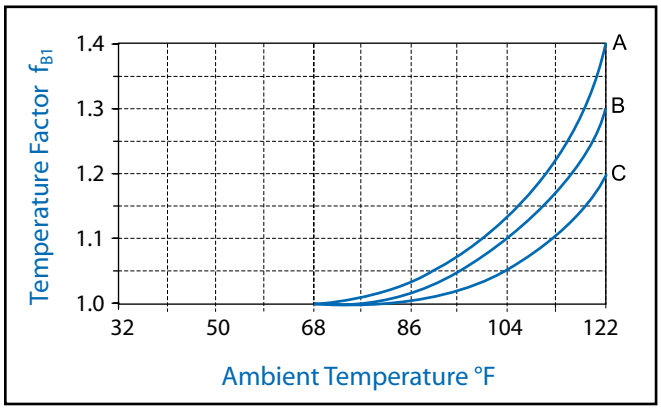


To find the duty cycle factor $f_{B2}$ use the following chart based on how many minutes per hour the unit is running.

In this example,
$f_{Bcombined} = (f_B = 1.50) \times (f_{B1} = 1.30) \times (f_{B2} = 0.90) = 1.76$

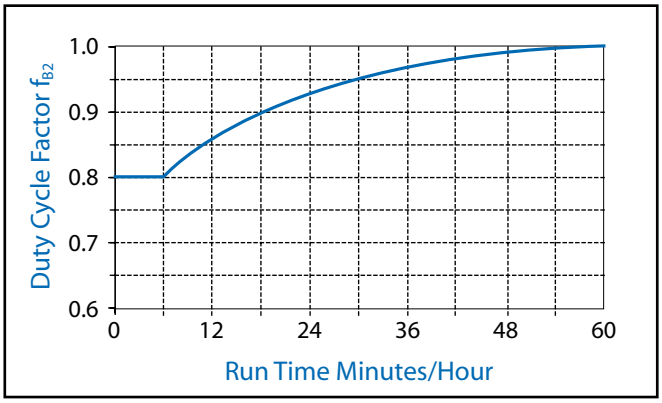


When selecting worm gear reducers, multi-thread (multi-start) worms must be used where shock loading exists and where the driven machine may backdrive the gearbox for short periods. Multi-thread worms have $z_1$ (number of threads) greater than or equal to 2.

$m_{af} \leq 0.25$ all numbers of worm threads ($z_1$) are possible
$m_{af} \leq 3.00$ $z_1 \geq 3$ is recommend
$m_{af} \leq 10.00$ $z_1 \geq 6$ is recommend

Refer to the worm reducer selection pages in this catalog (pages and find the any ratio with $z_1 \geq 3$. Then refer to the gearmotor selection pages and choose a gearmotor with a service factor of 1.76 or greater.


Send Quote Requests to info@automatedpt.com
Call +1(800)985-6929 To Order or Order Online At Nordgearmotors.com

Send Quote Requests to info@automatedpt.com Call +1(800)985-6929 To Order or Order Online At Nordgearmotors.com



# Engineering AGMA Service Classes



## AGMA Selection Method

### Gearmotors

Before a gearmotor is selected, an application class number must be determined. Since application classification represents the normal relationship between gear design power rating and the maximum potential transmitted power, it is suggested that the application class number be applied to the nameplate rating of the electric motor. The application class numbers are I, II, and III.

Their relationship to service factor is:

| Class Numbers | $f_B$ |
|---|---|
| I | 1.0 - 1.39 |
| II | 1.4 - 1.99 |
| III | ≥ 2.0 |

Application class numbers may be selected from the table. Some operational characteristics that affect an application's classification are:

- **Starting conditions:** Starting conditions where peak loads exceed 200 percent of rated load, applications with frequent starts and stops and reversing applications require special analysis. Rated load is defined as the unit rating with an application class number of I (1.0 - 1.39 service factor).
- **Overloads:** Loads in excess of the rated load are con-sidered overloads. Overload can be of momentary duration, periodic, quasi-steady state, or vibratory in nature. The magnitude and the number of stress cycles require special analysis to prevent low cycle fatigue or yield stress failure. Applications with high torque motors, motors for intermittent operation and applications where extreme repetitive shock occurs or where high-energy loads must be absorbed as when stalling require special consideration.
- **Brake equipped applications:** When a gear drive is equipped with a brake that is used to decelerate the motion of the system, select the drive based on the brake rating or the equivalent power, which ever is greater. If the brake is located on the output shaft of the gear drive, special analysis is required.
- **Reliability and life requirement:** Applications requiring a high degree of reliability or unusually long life should be given careful consideration by the user and NORD GEAR before assigning an application class number. High reliability and life should be addressed by using an increased safety factor agreed to between NORD and the purchaser.

Synchronous motors, certain types of high torque induction motors and generator drives require special analysis. Synchronous motors have high transient torque during starting and restarting after they trip out momentarily.

Induction motors of special high slip design can produce extremely high starting torque. High torque loads are produced when the motor trips out for a very short time and then the trip re-closes.

Generators have extremely high loads when they are out of phase with the main system and when there are across the line short circuits.

Adjustments to the gear drive selection may be necessary when one or more of the following conditions exist:

- Ambient conditions. Extremes of temperature and environment.
- Lubrication. Any lubricant not in accordance with NORD's recommendations.
- Misalignment and distortions due to inadequate foundations.
- Reversing applications.
- High-risk applications involving human safety.

The purpose of this table is to provide a guide in the selection and application of gear drives designed and rated in accordance with AGMA Standard 6009.

The service factor table has been developed from the experience of manufacturers and users of gear drives for use in common applications and has been found to be generally satisfactory for the listed industries when gears are applied using AGMA standards. It is recommended that the user and NORD Gear agree upon class numbers for special applications when variations of the table may be required.


Send Quote Requests to info@automatedpt.com
Call +1(800)985-6929 To Order or Order Online At Nordgearmotors.com

Send Quote Requests to info@automatedpt.com
Call +1(800)985-6929 To Order or Order Online At Nordgearmotors.com



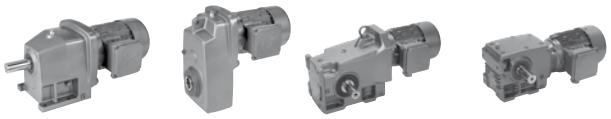

# Engineering AGMA Service Classes

| Application | Load Duration | | |
|---|---|---|---|
| | Up to 3 hrs per day | 3-10 hrs per day | Over 10 hrs per day |
| **AGITATORS (mixers)** | | | |
| Pure Liquids | I | I | II |
| Liquids and Solids | I | II | II |
| Liquids – Variable Density | I | II | II |
| **BLOWERS** | | | |
| Centrifugal | I | I | II |
| Lobe | I | II | II |
| Vane | I | II | II |
| **BREWING AND DISTILLING** | | | |
| Bottling Machinery | I | I | II |
| Brew Kettles – Continuous Duty | II | II | II |
| Cookers – Continuous Duty | II | II | II |
| Mash Tubs – Continuous Duty | II | II | II |
| Scale Hopper – Frequent Starts | II | II | II |
| **CAN FILLING MACHINES** | I | I | II |
| **CAR DUMPERS** | II | III | III |
| **CAR PULLERS** | I | II | II |
| **CLARIFIERS** | I | I | II |
| **CLASSIFIERS** | I | II | II |
| **CLAY WORKING MACHINERY** | | | |
| Brick Press | II | III | III |
| Briquette Machine | II | III | III |
| Pug Mill | I | II | II |
| **COMPACTORS** | III | III | III |
| **COMPRESSORS** | | | |
| Centrifugal | I | I | II |
| Lobe | I | II | II |
| Reciprocating, Multi-Cylinder | II | II | III |
| Reciprocating, Single-Cylinder | III | III | III |
| **CONVEYORS – GENERAL PURPOSE** | | | |
| Includes Apron, Assemble, Belt, Bucket, Chain, Flight, Oven & Screw Uniformly loaded or Fed | I | I | II |
| Heavy Duty – Not Uniformly Fed | I | II | II |
| Severe Duty – Reciprocating or Shaker | II | III | III |
| **CRANES** | | | |
| Main Hoist | | | |
| Medium Duty | II | II | II |
| Heavy Duty | III | III | III |
| Reversing | II | II | II |
| Skip Hoist | II | II | II |
| Trolley Drive | II | II | II |
| Bridge Drive | II | II | II |
| **CRUSHER** | | | |
| Stone or Ore | III | III | III |
| **DREDGES** | | | |
| Cable Reels | II | II | II |
| Conveyors | II | II | II |
| Cutter Head Dives | III | III | III |
| Pumps | III | III | III |
| Screen Drives | III | III | III |
| Stackers | II | II | II |
| Winches | II | II | II |

| Application | Load Duration | | |
|---|---|---|---|
| | Up to 3 hrs per day | 3-10 hrs per day | Over 10 hrs per day |
| **ELEVATORS** | | | |
| Bucket | I | II | II |
| Centrifugal Discharge | I | I | II |
| Escalators | I | I | II |
| Freight | I | II | II |
| Gravity Discharge | I | I | II |
| **EXTRUDERS** | | | |
| General | II | II | II |
| Plastics | | | |
| Variable Speed Drive | III | III | III |
| Fixed Speed Drive | III | III | III |
| Rubber | | | |
| Continuous Screw Operation | III | III | III |
| Intermittent Screw Operation | III | III | III |
| **FANS** | | | |
| Centrifugal | I | I | II |
| Cooling Towers | III | III | III |
| Forced Draft | II | II | II |
| Induced Draft | II | II | II |
| Industrial & Mine | II | II | II |
| **FEEDERS** | | | |
| Apron | I | II | II |
| Belt | I | II | II |
| Disc | I | I | II |
| Reciprocating | II | III | III |
| Screw | I | II | II |
| **FOOD INDUSTRY** | | | |
| Cereal Cooker | I | I | II |
| Dough Mixer | II | II | II |
| Meat Grinders | II | II | II |
| Slicers | I | II | II |
| **GENERATORS AND EXCITERS** | II | II | II |
| **HAMMER MILLS** | III | III | III |
| **HOISTS** | | | |
| Heavy Duty | III | III | III |
| Medium Duty | II | II | II |
| Skip Hoist | II | II | II |
| **LAUNDRY TUMBLERS** | II | II | II |
| **LAUNDRY WASHERS** | II | II | III |


Send Quote Requests to info@automatedpt.com
Call +1(800)985-6929 To Order or Order Online At Nordgearmotors.com

# Engineering AGMA Service Classes

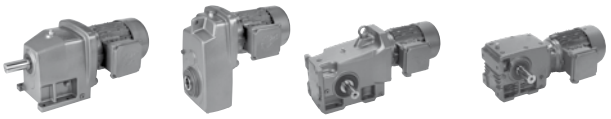

DRIVESYSTEMS

| Application | Load Duration | | |
|---|---|---|---|
| | Up to 3 hrs per day | 3-10 hrs per day | Over 10 hrs per day |
| **LUMBER INDUSTRY** | | | |
| Barkers | | | |
| Spindle Feed | II | II | II |
| Main Drive | III | III | III |
| Conveyors | | | |
| Burner | II | II | II |
| Main or Heavy Duty | II | II | II |
| Main log | III | III | III |
| Re-saw, Merry-Go-Round | II | II | II |
| Slab | III | III | III |
| Transfer | II | II | II |
| Chains | | | |
| Floor | II | II | II |
| Green | II | II | III |
| Cut-Off Saws | | | |
| Chain | II | II | III |
| Drag | II | II | III |
| Debarking Drums | III | III | III |
| Feeds | | | |
| Edger | II | II | II |
| Gang | II | III | III |
| Trimmer | II | II | II |
| Long Deck | III | III | III |
| Log Hauls – Incline – Well Type | III | III | III |
| Log Turning Devices | III | III | III |
| Planer Feed | II | II | II |
| Planer Tilting Hoists | II | II | II |
| Rolls – live-off brg. – Roll Cases | III | III | III |
| Sorting Table | II | II | II |
| Tipple Hoist | II | II | II |
| Transfers | | | |
| Chain | II | II | III |
| Craneway | II | II | III |
| Tray Drives | II | II | II |
| Veneer Lathe Drives | II | II | II |
| **METAL MILLS** | | | |
| Draw Bench Carriage and Main Drive | II | II | II |
| Runout Table | | | |
| Non-reversing Group Drives | II | II | II |
| Individual Drives | III | III | III |
| Reversing | III | III | III |
| Slab Pushers | II | II | II |
| Shears | III | III | III |
| Wire drawing | II | II | II |
| Wire Winding Machine | II | II | II |
| **METAL STRIP PROCESSING MACHINERY** | | | |
| Bridles | II | II | II |
| Coilers & Uncoilers | I | I | II |
| Edge Trimmers | I | II | II |
| Flatteners | II | II | II |
| Loopers (Accumulators) | I | I | I |
| Pinch Rolls | II | II | I |
| Scrap Choppers | II | II | II |
| Shears | III | III | III |
| Slitters | I | II | II |

| Application | Load Duration | | |
|---|---|---|---|
| | Up to 3 hrs per day | 3-10 hrs per day | Over 10 hrs per day |
| **MILLS, ROTARY TYPE** | | | |
| Ball & Rod | | | |
| Spur Ring Gear | III | III | III |
| Helical Ring Gear | II | II | II |
| Direct Connected | III | III | III |
| Cement Kilns | II | II | II |
| Dryers & Coolers | II | II | II |
| **PAPER MILLS**[1] | | | |
| Agitator (Mixer) | II | II | II |
| Agitator for Pure liquors | II | II | II |
| Barking Drums | III | III | III |
| Barkers – Mechanical | III | III | III |
| Beater | II | II | II |
| Breaker Stack | II | II | II |
| Calender[2] | II | II | II |
| Chipper | III | III | III |
| Chip Feeder | II | II | II |
| Coating Rolls | II | II | II |
| Conveyors | | | |
| Chip, Bark, Chemical | II | II | II |
| log (including Slab) | III | III | III |
| Couch Rolls | II | II | II |
| Cutter | III | III | III |
| Cylinder Molds | II | II | II |
| Dryers[2] | | | |
| Paper Machine | II | II | II |
| Conveyor Type | II | II | II |
| Embosser | II | II | II |
| Extruder | II | II | II |
| Fourdrinier Rolls (Includes lump, Dandy Roll, Wire Turning, and Return Rolls) | II | II | II |
| Jordan | II | II | II |
| Kiln Drive | II | II | II |
| Mt. Hope Roll | II | II | II |
| Paper Rolls | II | II | II |
| Platter | II | II | II |
| Presses – Felt & Suction | II | II | II |
| Pulper | III | III | III |
| Pumps – Vacuum | II | II | II |
| Reel (Surface Type) | II | II | II |
| Screens | | | |
| Chip | II | II | II |
| Rotary | II | II | II |
| Vibrating | III | III | III |
| Size Press | II | II | II |
| Supercalendar[3] | II | II | II |
| Thickener (AC Motor) | II | II | II |
| Thickener (DC Motor) | II | II | II |
| Washer (AC Motor) | II | II | II |
| Washer (DC Motor) | II | II | II |
| Wind and Unwind Stand | I | I | I |
| Winders (Surface Type) | II | II | II |
| Yankee Dryers[2] | II | II | II |


Send Quote Requests to info@automatedpt.com
Call +1(800)985-6929 To Order or Order Online At Nordgearmotors.com

Send Quote Requests to info@automatedpt.com Call +1(800)985-6929 To Order or Order Online At Nordgearmotors.com



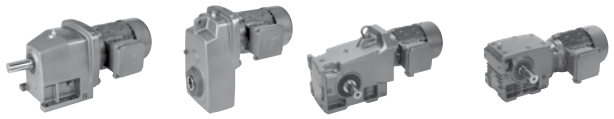

# Engineering AGMA Service Classes



| Application | Load Duration | | |
|---|---|---|---|
| | Up to 3 hrs per day | 3-10 hrs per day | Over 10 hrs per day |
| **PLASTICS INDUSTRY – PRIMARY PROCESSING** | | | |
| Intensive Internal Mixers | | | |
| Batch Mixers | III | III | III |
| Continuous Mixers | II | II | II |
| Batch Drop Mill – 2 smooth rolls | II | II | II |
| Continuous Feed, Holding & | II | II | II |
| Biend Mill Calendars | II | II | II |
| **PLASTICS INDUSTRY – SECONDARY PROCESSING** | | | |
| Blow Molders | II | II | II |
| Coating | II | II | II |
| Film | II | II | II |
| Pipe | II | II | II |
| Pre-Plasticizers | II | II | II |
| Rods | II | II | II |
| Sheet | II | II | II |
| Tubing | II | II | II |
| **PULLERS – BARGE HAUL** | II | II | II |
| **PUMPS** | | | |
| Centrifugal | I | I | II |
| Proportioning | II | II | II |
| Reciprocating | | | |
| Single Acting, 3 or more cylinders | II | II | II |
| Double Acting, 2 or more cylinders | II | II | II |
| Rotary | | | |
| Gear Type | I | I | II |
| Lobe | I | I | II |
| Vane | I | I | II |
| **RUBBER INDUSTRY** | | | |
| Intensive Internal Mixers | | | |
| Batch Mixers | III | III | III |
| Continuous Mixers | II | II | II |
| Mixing Mill | | | |
| 2 smooth rolls | II | II | II |
| 1 or 2 corrugated rolls | III | III | III |
| Batch Drop Mill – 2 smooth rolls | II | II | II |
| Cracker Warmer – 2 roll, 1 corrugated roll | III | III | III |
| Cracker – 2 corrugated rolls | III | III | III |
| Holding, Feed & Blend Mill – 2 rolls | II | II | II |
| Refiner – 2 rolls | II | II | II |
| Calendars | II | II | II |
| **SAND MULLER** | II | II | II |
| **SEWAGE DISPOSAL EQUIPMENT** | | | |
| Bar Screens | II | II | II |
| Chemical Feeders | II | II | II |
| Dewatering Screens | II | II | II |
| Scum Breakers | II | II | II |
| Slow or Rapid Mixers | II | II | II |
| Sludge Collectors | II | II | II |
| Thickener | II | II | II |
| Vacuum Filters | II | II | II |

| Application | Load Duration | | |
|---|---|---|---|
| | Up to 3 hrs per day | 3-10 hrs per day | Over 10 hrs per day |
| **SCREENS** | | | |
| Air Washing | I | I | II |
| Rotary – Stone or Gravel | II | II | II |
| Traveling Water Intake I | I | I | I |
| **SCREW CONVEYORS** | | | |
| Uniformly loaded or Fed | I | I | II |
| Heavy Duty | I | II | II |
| **SUGAR INDUSTRY** | | | |
| Beet Slicer | III | III | III |
| Cane Knives | II | II | II |
| Crushers | II | II | II |
| Mills (low speed end) | III | III | III |
| **TEXTILE INDUSTRY** | | | |
| Batchers | II | II | II |
| Calendars | II | II | II |
| Cards | II | II | II |
| Dry Cans | II | II | II |
| Dyeing Machinery | II | II | II |
| Looms | II | II | II |
| Mangles | II | II | II |
| Nappers | II | II | II |
| Pads | II | II | II |
| Siashers | II | II | II |
| Soapers | II | II | II |
| Spinners | II | II | II |
| Tenter Frames | II | II | II |
| Washers | II | II | II |
| Winders | II | II | II |

## Notes to GEARMOTOR SERVICE FACTOR table:

1) The class numbers listed for paper mill applications are consistent with those shown in TAPPI (Technical Association of Pulp and Paper Industry) Technical Information Sheet 0406-18 1967, Service Factors for Gears on major Equipment in the Paper and Pulp Industry.

2) Anti-friction bearings only.

3) A Class Number of I may be applied at base speed of a super-calendar operating over a speed range of part-range constant horsepower and part-range constant torque where the constant horsepower speed range is greater than 1.5 to 1. A Class Number of II is applicable to supercalendars operating over the entire speed range at constant torque or where the constant horsepower speed range is less than 1.5 to1.



Send Quote Requests to info@automatedpt.com
Call +1(800)985-6929 To Order or Order Online At Nordgearmotors.com

# Engineering AGMA Service Factors



## Speed Reducers

Before an enclosed speed reducer or increaser can be selected for any application, an equivalent unit power rating (service factor = 1.0) must be determined. This is done by multiplying the specified power by the service factor. Since the service factor represents the normal relationship between the gear unit rating and the required application power, it is suggested that the service factor be applied to the nameplate rating of the prime mover or driven machine rating, as applicable.

NORD GEAR and the user must agree upon which power, prime mover rating or driven machine requirements, should dictate the selection of the gear drive. It is necessary that the gear drive selected have a rated unit capacity equal to or in excess of this "equivalent unit power rating".

All service factors listed are 1.0 or greater. Service factors less than 1.0 can be used in some applications when specified by the user and agreed to by NORD GEAR.

The REDUCER SERVICE FACTOR table should be used with caution, since much higher values have occurred in some applications. Values as high as ten have been used. On some applications up to six times nominal torque can occur, such as: Turbine/Generator drives, Heavy Plate and Billet rolling mills.

It has been developed from the experience of manufacturers and users of gear drives for use in common applications. It is suggested that service factors for special applications be agreed upon by the user and NORD GEAR when variations of the values in the table may be required.

Service factors shown are for reducers driven by motors (electric or hydraulic) and turbines (steam or gas) according to AGMA 6010. When the driver is a single cylinder or multi-cylinder engine, the service factors from the table must be modified for the appropriate type of prime mover.

As an example, if the application is a centrifugal blower, the service factor from the REDUCER SERVICE FACTOR table is 1.25 for a motor or turbine. The CONVERSION TABLE changes this value to 1.75 for a single cylinder engine and 1.50 for a multi-cylinder engine.

**CAUTION:** Any user of enclosed gear drives should make sure that the latest available information affecting the selection of a gear drive is used. When better load intensity data is available on the driving or driven equipment, this should be considered when a service factor is selected.

**Conversion Table**

| Electric Motor, Steam & Gas Turbines, Hydraulics | Single-Cylinder Engines | Multi-Cylinder Engines |
|---|---|---|
| 1.00 | 1.50 | 1.25 |
| 1.25 | 1.75 | 1.50 |
| 1.50 | 2.0 | 1.75 |
| 1.75 | 2.25 | 2.00 |
| 2.00 | 2.50 | 2.25 |
| 2.25 | 2.75 | 2.50 |
| 2.50 | 3.00 | 2.75 |
| 2.75 | 3.25 | 3.00 |
| 3.00 | 3.50 | 3.25 |

| Application | Load Duration | | |
|---|---|---|---|
| | Up to 3 hrs per day | 3-10 hrs per day | Over 10 hrs per day |
| **AGITATORS (mixers)** | | | |
| Pure Liquids | 1.00 | 1.00 | 1.25 |
| Liquids and Solids | 1.00 | 1.25 | 1.50 |
| Liquids – Variable Density | 1.00 | 1.25 | 1.50 |
| **BLOWERS** | | | |
| Centrifugal | 1.00 | 1.25 | 1.50 |
| Lobe | 1.00 | 1.25 | 1.50 |
| Vane | 1.00 | 1.00 | 1.25 |
| **BREWING AND DISTILLING** | | | |
| Bottling Machinery | 1.00 | 1.00 | 1.25 |
| Brew Kettles – Continuous Duty | 1.00 | 1.00 | 1.25 |
| Cookers – Continuous Duty | 1.00 | 1.00 | 1.25 |
| Mash Tubs – Continuous Duty | 1.00 | 1.00 | 1.25 |
| Scale Hopper – Frequent Starts | 1.00 | 1.25 | 1.50 |
| **CAN FILLING MACHINES** | 1.00 | 1.00 | 1.25 |
| **CAR DUMPERS** | 1.25 | 1.50 | 1.75 |
| **CAR PULLERS** | 1.00 | 1.25 | 1.50 |
| **CLARIFIERS** | 1.00 | 1.00 | 1.25 |
| **CLASSIFIERS** | 1.00 | 1.25 | 1.50 |
| **CLAY WORKING MACHINERY** | | | |
| Brick Press | 1.25 | 1.50 | 1.75 |
| Briquette Machine | 1.25 | 1.50 | 1.75 |
| Pug Mill | 1.00 | 1.25 | 1.50 |
| **COMPACTORS** | 1.50 | 1.75 | 2.00 |
| **COMPRESSORS** | | | |
| Centrifugal | 1.00 | 1.00 | 1.25 |
| Lobe | 1.00 | 1.25 | 1.50 |
| Reciprocating, Multi-Cylinder | 1.00 | 1.25 | 1.50 |
| Reciprocating, Single-Cylinder | 1.25 | 1.50 | 1.75 |
| **CONVEYORS – GENERAL PURPOSE** | | | |
| Uniformly loaded or fed | 1.00 | 1.00 | 1.25 |
| Not uniformly fed | 1.00 | 1.25 | 1.50 |
| Reciprocating or shaker | 1.25 | 1.50 | 1.75 |
| **CRANES** | | | |
| Dry dock | | | |
| Main hoist | 1.25 | 1.50 | 1.75 |
| Auxilliary hoist | 1.25 | 1.50 | 1.75 |
| Boom hoist | 1.25 | 1.50 | 1.75 |
| Slewing drive | 1.25 | 1.50 | 1.75 |
| Traction drive | 1.50 | 1.50 | 1.50 |
| Industrial Duty | | | |
| Main hoist | 1.00 | 1.25 | 1.50 |
| **CRUSHER** | | | |
| Stone or ore | 1.50 | 1.75 | 2.00 |


Send Quote Requests to info@automatedpt.com
Call +1(800)985-6929 To Order or Order Online At Nordgearmotors.com

Send Quote Requests to info@automatedpt.com
Call +1(800)985-6929 To Order or Order Online At Nordgearmotors.com



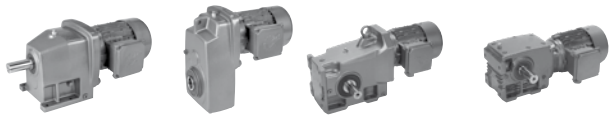

# Engineering AGMA Service Factors

| Application | Load Duration | | |
|---|---|---|---|
| | Up to 3 hrs per day | 3-10 hrs per day | Over 10 hrs per day |
| **DREDGES** | | | |
| Cable reels | 1.00 | 1.25 | 1.50 |
| Conveyors | 1.00 | 1.25 | 1.50 |
| Cutter Head Dives | 1.25 | 1.50 | 1.75 |
| Pumps | 1.00 | 1.25 | 1.50 |
| Screen Drives | 1.25 | 1.50 | 1.75 |
| Stackers | 1.00 | 1.25 | 1.50 |
| Winches | 1.00 | 1.25 | 1.50 |
| **ELEVATORS** | | | |
| Bucket | 1.00 | 1.25 | 1.50 |
| Centrifugal Discharge | 1.00 | 1.00 | 1.25 |
| Gravity Discharge | 1.00 | 1.00 | 1.25 |
| **EXTRUDERS** | | | |
| General | 1.25 | 1.25 | 1.25 |
| Plastics | | | |
| Variable Speed Drive | 1.50 | 1.50 | 1.50 |
| Fixed Speed Drive | 1.75 | 1.75 | 1.75 |
| Rubber | | | |
| Continuous Screw Operation | 1.50 | 1.50 | 1.50 |
| Intermittent Screw Operation | 1.75 | 1.75 | 1.75 |
| **FANS** | | | |
| Centrifugal | 1.00 | 1.00 | 1.25 |
| Forced Draft | 1.25 | 1.25 | 1.25 |
| Induced Draft | 1.00 | 1.25 | 1.50 |
| Industrial & Mine | 1.00 | 1.25 | 1.50 |
| **FEEDERS** | | | |
| Apron | 1.00 | 1.25 | 1.50 |
| Belt | 1.00 | 1.25 | 1.50 |
| Disc | 1.00 | 1.00 | 1.25 |
| Reciprocating | 1.25 | 1.50 | 1.75 |
| Screw | 1.00 | 1.25 | 1.50 |
| **FOOD INDUSTRY** | | | |
| Cereal Cooker | 1.00 | 1.00 | 1.25 |
| Dough Mixer | 1.00 | 1.25 | 1.50 |
| Meat Grinders | 1.00 | 1.25 | 1.50 |
| Slicers | 1.00 | 1.25 | 1.50 |
| **GENERATORS AND EXCITERS** | 1.00 | 1.00 | 1.25 |
| **HAMMER MILLS** | 1.50 | 1.50 | 1.75 |
| **HOISTS** | | | |
| Heavy Duty | 1.25 | 1.50 | 1.75 |
| Medium Duty | 1.00 | 1.25 | 1.50 |
| Skip Hoist | 1.00 | 1.25 | 1.50 |
| **LAUNDRY TUMBLERS** | 1.00 | 1.25 | 1.50 |
| **LAUNDRY WASHERS** | 1.25 | 1.25 | 1.50 |

| Application | Load Duration | | |
|---|---|---|---|
| | Up to 3 hrs per day | 3-10 hrs per day | Over 10 hrs per day |
| **LUMBER INDUSTRY** | | | |
| Barkers | 1.25 | 1.25 | 1.50 |
| Spindle Feed | 1.50 | 1.50 | 1.50 |
| Main Drive | 1.25 | 1.25 | 1.50 |
| Conveyors | | | |
| Burner | 1.25 | 1.25 | 1.50 |
| Main or Heavy Duty | 1.50 | 1.50 | 1.50 |
| Main log | 1.50 | 1.50 | 1.75 |
| Re-saw, Merry-Go-Round | 1.25 | 1.25 | 1.50 |
| Slab | 1.50 | 1.50 | 1.75 |
| Transfer | 1.25 | 1.25 | 1.50 |
| Chains | | | |
| Floor | 1.50 | 1.50 | 1.50 |
| Green | 1.50 | 1.50 | 1.50 |
| Cut-Off Saws | | | |
| Chain | 1.50 | 1.50 | 1.50 |
| Drag | 1.50 | 1.50 | 1.50 |
| Debarking Drums | 1.50 | 1.50 | 1.75 |
| Feeds | | | |
| Edger | 1.25 | 1.25 | 1.50 |
| Gang | 1.50 | 1.50 | 1.50 |
| Trimmer | 1.25 | 1.25 | 1.50 |
| Long Deck | 1.50 | 1.50 | 1.50 |
| Log Hauls – Incline – Well Type | 1.50 | 1.50 | 1.50 |
| Log Turning Devices | 1.50 | 1.50 | 1.50 |
| Planer Feed | 1.25 | 1.25 | 1.50 |
| Planer Tilting Hoists | 1.50 | 1.50 | 1.50 |
| Rolls – live-off brg. – Roll Cases | 1.50 | 1.50 | 1.50 |
| Sorting Table | 1.25 | 1.50 | 1.50 |
| Tipple Hoist | 1.25 | 1.25 | 1.50 |
| Transfers | | | |
| Chain | 1.50 | 1.50 | 1.50 |
| Causeway | 1.50 | 1.50 | 1.50 |
| Tray Drives | 1.25 | 1.25 | 1.50 |
| **METAL MILLS** | | | |
| Draw Bench Carriage & Main Drive | 1.00 | 1.25 | 1.50 |
| Runout Table | | | |
| Non-reversing | | | |
| Group Drives | 1.00 | 1.25 | 1.50 |
| Individual Drives | 1.50 | 1.50 | 1.75 |
| Reversing | 1.50 | 1.50 | 1.75 |
| Slab Pushers | 1.25 | 1.25 | 1.50 |
| Shears | 1.50 | 1.50 | 1.75 |
| Wire drawing | 1.00 | 1.25 | 1.50 |
| Wire Winding Machine | 1.00 | 1.25 | 1.50 |


Send Quote Requests to info@automatedpt.com
Call +1(800)985-6929 To Order or Order Online At Nordgearmotors.com

# Engineering AGMA Service Factors

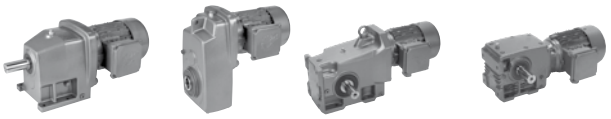

DRIVESYSTEMS

| Application | Load Duration | | |
|---|---|---|---|
| | Up to 3 hrs per day | 3-10 hrs per day | Over 10 hrs per day |
| **METAL STRIP PROCESSING MACHINERY** | | | |
| Bridles | 1.25 | 1.25 | 1.50 |
| Coilers and uncoilers | 1.00 | 1.00 | 1.25 |
| Edge Trimmers | 1.00 | 1.25 | 1.50 |
| Flatteners | 1.00 | 1.25 | 1.50 |
| Loopers (accumulators) | 1.00 | 1.00 | 1.00 |
| Pinch rolls | 1.00 | 1.25 | 1.50 |
| Scrap choppers | 1.00 | 1.25 | 1.50 |
| Shears | 1.50 | 1.50 | 1.75 |
| Slitters | 1.00 | 1.25 | 1.50 |
| **MILLS, ROTARY TYPE** | | | |
| Ball & Rod | | | |
| Spur Ring Gear | 1.50 | 1.50 | 1.75 |
| Helical Ring Gear | 1.50 | 1.50 | 1.50 |
| Direct Connected | 1.50 | 1.50 | 1.75 |
| Cement Kilns | 1.50 | 1.50 | 1.50 |
| Dryers & Coolers | 1.50 | 1.50 | 1.50 |
| **MIXERS CONCRETE** | 1.00 | 1.25 | 1.50 |
| **PAPER MILLS**[1] | | | |
| Agitator (Mixer) | 1.50 | 1.50 | 1.50 |
| Agitator for Pure liquors | 1.25 | 1.25 | 1.25 |
| Barking Drums | 1.75 | 1.75 | 1.75 |
| Barkers – Mechanical | 1.75 | 1.75 | 1.75 |
| Beater | 1.50 | 1.50 | 1.50 |
| Breaker Stack | 1.25 | 1.25 | 1.25 |
| Calender[2] | 1.25 | 1.25 | 1.25 |
| Chipper | 1.75 | 1.75 | 1.75 |
| Chip Feeder | 1.50 | 1.50 | 1.50 |
| Coating Rolls | 1.25 | 1.25 | 1.25 |
| Conveyors | | | |
| Chip, Bark, Chemical | 1.25 | 1.25 | 1.25 |
| log (including Slab) | 1.75 | 1.75 | 1.75 |
| Couch Rolls | 1.25 | 1.25 | 1.25 |
| Cutter | 1.75 | 1.75 | 1.75 |
| Cylinder Molds | 1.25 | 1.25 | 125 |
| Dryers[2] | | | |
| Paper Machine | 1.25 | 1.25 | 1.25 |
| Conveyor Type | 1.25 | 1.25 | 1.25 |
| Embosser | 1.25 | 1.25 | 1.25 |
| Extruder | 1.50 | 1.50 | 1.50 |
| Fourdrinier Rolls (Includes lump Breaker, Dandy Roll, Wire Turning and Return Rolls) | 1.25 | 1.25 | 1.25 |
| Jordan | 1.25 | 1.25 | 1.25 |
| Kiln Drive | 1.50 | 1.50 | 1.50 |
| Mt. Hope Roll | 1.25 | 1.25 | 1.25 |
| Paper Rolls | 1.25 | 1.25 | 1.25 |

| Application | Load Duration | | |
|---|---|---|---|
| | Up to 3 hrs per day | 3-10 hrs per day | Over 10 hrs per day |
| **PAPER MILLS (cont)** | | | |
| Presses – Felt & Suction | 1.25 | 1.25 | 1.25 |
| Pulper | 1.50 | 1.50 | 1.75 |
| Pumps – Vacuum | 1.50 | 1.50 | 1.50 |
| Reel (Surface Type) | 1.25 | 1.25 | 1.50 |
| Screens | | | |
| Chip | 1.50 | 1.50 | 1.50 |
| Rotary | 1.50 | 1.50 | 1.50 |
| Vibrating | 1.75 | 1.75 | 1.75 |
| Size Press | 1.25 | 1.25 | 1.25 |
| Supercalendar[3] | 1.25 | 1.25 | 1.25 |
| Thickener (AC Motor) | 1.50 | 1.50 | 1.50 |
| Thickener (DC Motor) | 1.25 | 1.25 | 1.25 |
| Washer (AC Motor) | 1.50 | 1.50 | 1.50 |
| Washer (DC Motor) | 1.25 | 1.25 | 1.25 |
| Wind and Unwind Stand | 1.00 | 1.00 | 1.00 |
| Winders (Surface Type) | 1.25 | 1.25 | 1.25 |
| Yankee Dryers[2] | 1.25 | 1.25 | 1.25 |
| **PLASTICS INDUSTRY – PRIMARY PROCESSING** | | | |
| Intensive Internal Mixers | | | |
| Batch Mixers | 1.75 | 1.75 | 1.75 |
| Continuous Mixers | 1.50 | 1.50 | 1.50 |
| Batch Drop Mill – 2 smooth rolls | | | |
| Continuous Feed, Holding & Biend Mill | 1.25 | 1.25 | 1.25 |
| Calendars | 1.50 | 1.50 | 1.50 |
| **PLASTICS INDUSTRY – SECONDARY PROCESSING** | | | |
| Blow Molders | 1.50 | 1.50 | 1.50 |
| Coating | 1.25 | 1.25 | 1.25 |
| Film | 1.25 | 1.25 | 1.25 |
| Pipe | 1.25 | 1.25 | 1.25 |
| Pre-Plasticizers | 1.50 | 1.50 | 1.50 |
| Rods | 1.25 | 1.25 | 1.25 |
| Sheet | 1.25 | 1.25 | 1.25 |
| Tubing | 1.25 | 1.25 | 1.50 |
| **PULLERS – BARGE HAUL** | 1.00 | 1.50 | 1.75 |
| **PUMPS** | | | |
| Centrifugal | 1.00 | 1.00 | 1.25 |
| Proportioning | 1.00 | 1.25 | 1.50 |
| Reciprocating | | | |
| Single Acting, 3 or more cylinders | 1.00 | 1.25 | 1.50 |
| Double Acting, 2 or more cylinders | 1.00 | 1.25 | 1.50 |
| Rotary | | | |
| Gear Type | 1.00 | 1.00 | 1.50 |
| Lobe | 1.00 | 1.00 | 1.25 |
| Vane | 1.00 | 1.00 | 1.25 |


Send Quote Requests to info@automatedpt.com
Call +1(800)985-6929 To Order or Order Online At Nordgearmotors.com

Send Quote Requests to info@automatedpt.com
Call +1(800)985-6929 To Order or Order Online At Nordgearmotors.com





# Engineering AGMA Service Factors



| Application | Load Duration | | |
|---|---|---|---|
| | Up to 3 hrs per day | 3-10 hrs per day | Over 10 hrs per day |
| **RUBBER INDUSTRY** | | | |
| Intensive Internal Mixers | | | |
| Batch Mixers | 1.50 | 1.75 | 1.75 |
| Continuous Mixers | 1.25 | 1.50 | 1.50 |
| Mixing Mill | | | |
| 2 smooth rolls | 1.50 | 1.50 | 1.50 |
| 1 or 2 corrugated rolls | 1.75 | 1.75 | 1.75 |
| Batch Drop Mill – 2 smooth rolls | 1.50 | 1.50 | 1.50 |
| Cracker Warmer – 2 roll, 1 corrugated roll | 1.75 | 1.75 | 1.75 |
| Cracker – 2 corrugated rolls | 1.75 | 1.75 | 1.75 |
| Holding, Feed & Blend Mill – 2 rolls | 1.25 | 1.25 | 1.25 |
| Refiner – 2 rolls | 1.50 | 1.50 | 1.50 |
| Calendars | 1.50 | 1.50 | 1.50 |
| **SAND MILLER** | 1.00 | 1.25 | 1.50 |
| **SEWAGE DISPOSAI EQUIPMENT** | | | |
| Bar Screens | 1.00 | 1.00 | 1.25 |
| Chemical Feeders | | 1.00 | 1.25 |
| Dewatering Screens | 1.00 | 1.25 | 1.50 |
| Scum Breakers | 1.00 | 1.25 | 1.50 |
| Slow or Rapid Mixers | 1.00 | 1.25 | 1.50 |
| Sludge Collectors | 1.00 | 1.00 | 1.25 |
| Thickener | 1.00 | 1.25 | 1.50 |
| Vacuum Filters | 1.00 | 1.25 | 1.50 |
| **SCREENS** | | | |
| Air Washing | 1.00 | 1.00 | 1.25 |
| Rotary – Stone or Gravel | 1.00 | 1.25 | 1.50 |
| Traveling Water Intake I | 1.00 | 1.00 | 1.25 |
| **SCREW CONVEYORS** | | | |
| Uniformly loaded or Fed | | | |
| Heavy Duty | | | |
| **SUGAR INDUSTRY** | | | |
| Beet Slicer | 1.50 | 1.50 | 1.75 |
| Cane Knives | 1.50 | 1.50 | 1.50 |
| Crushers | 1.50 | 1.50 | 1.50 |
| Mills (low speed end) | 1.50 | 1.50 | 1.50 |

| Application | Load Duration | | |
|---|---|---|---|
| | Up to 3 hrs per day | 3-10 hrs per day | Over 10 hrs per day |
| **TEXTILE INDUSTRY** | | | |
| Batchers | 1.00 | 1.25 | 1.50 |
| Calendars | 1.00 | 1.25 | 1.50 |
| Cards | 1.00 | 1.25 | 1.50 |
| Dry Cans | 1.00 | 1.25 | 1.50 |
| Dyeing Machinery | 1.00 | 1.25 | 1.50 |
| Looms | 1.00 | 1.25 | 1.50 |
| Mangles | 1.00 | 1.25 | 1.50 |
| Nappers | 1.00 | 1.25 | 1.50 |
| Pads | 1.00 | 1.25 | 1.50 |
| Siashers | 1.00 | 1.25 | 1.50 |
| Soapers | 1.00 | 1.25 | 1.50 |
| Spinners | 1.00 | 1.25 | 1.50 |
| Tenter Frames | 1.00 | 1.25 | 1.50 |
| Washers | 1.00 | 1.25 | 1.50 |
| Winders | 1.00 | 1.25 | 1.50 |

**Notes to REDUCER SERVICE FACTOR table:**

1) Service factors for paper mill applications are applied to the nameplate rating of the electric motor at the motor rated based speed.

2) Anti-friction bearings only. Use 1.5 for sleeve bearings.

3) A service factor of 1.0 may be applied at base speed of a super calender operating over-speed range of part range constant horsepower, part range constant torque where the constant horsepower speed range is greater that 1.5 to 1. A service factor of 1.25 is applicable to super calenders operating over the entire speed range at constant torque or where the constant horsepower speed range is less than 1.5 to 1. Explanatory notes.


Send Quote Requests to info@automatedpt.com
Call +1(800)985-6929 To Order or Order Online At Nordgearmotors.com

Send Quote Requests to info@automatedpt.com Call +1(800)985-6929 To Order or Order Online At Nordgearmotors.com



# Engineering Shrink Discs



DRIVESYSTEMS

## Shrink Discs (S & VS)

Shrink discs eliminate fretting corrosion and allow for easy shaft mounting and dismounting. Mating shaft tolerances are usually tighter for shrink disc shafts due to the gripping forces needed. The customer shaft diameter has to be machined according to ISO h6 fit tolerances, with a shaft finish of 125 micro inches or smoother.

When designing the customer shaft end which inserts into the shrink disc shaft, it must engage the full length of the hollow shaft (ADH). The tolerance of the shaft is to be machined according to ISO h6. The material used in the customer side shaft end must have a yield strength of at least 52,260 psi (360 N/mm²) so that the compression to create the friction engagement can be established and that no deformation occurs.

Contact NORD when using a shrink disc in an application where the shrink disc connection must simultaneously transmit torque and thrust.

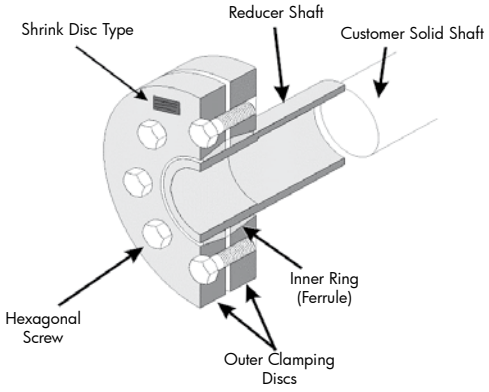


### Clincher™ gear units

| Gear unit type | | Shrink disc | | | Class 10.9 Hexagonal screw | | |
|---|---|---|---|---|---|---|---|
| | | Type | $T_{2max}$ [lb-in] | Safety Factor [h6] | Size | Qty | Torque [lb-in] |
| SK 0282NB | AZSH | SN 30/40 V | 1460 | 5.9 | M6 x 35 | 8 | 106.2 |
| SK 1382NB | AZSH | SN 35/46 V | 3275 | 3.8 | M6 x 35 | 10 | 106.2 |
| SK 1282 | AZSH | SN 30/40 V | 2620 | 3.3 | M6 x 35 | 8 | 106.2 |
| SK 2282 | AZSH | SN 35/46 V | 4983 | 2.6 | M6 x 35 | 10 | 106.2 |
| SK 3282 | AZSH | SN 40/55 V | 9195 | 2.3 | M8 x 40 | 8 | 265.5 |
| SK 4282 | AZSH | SN 50/62 V | 17700 | 2.2 | M8 x 40 | 10 | 265.5 |
| SK 5282 | AZSH | SN 60/76 V | 28630 | 2.5 | M10 x 50 | 10 | 522.2 |
| SK 6282 | AZSH | SN 70/90 V | 53100 | 2.3 | M12 x 70 | 10 | 885.0 |
| SK 7282 | AZSH | SN 80/108 V | 73455 | 2.5 | M12 x 70 | 14 | 885.0 |
| SK 8282 | AZSH | SN 100/128 V | 116820 | 2.3 | M16 x 80 | 8 | 2212.5 |
| SK 9282 | AZSH | SN 125/158 V | 224790 | 2.3 | M16 x 80 | 12 | 2212.5 |
| SK 10282 | AZSH | SN 160/210 V | 329220 | 3.6 | M20 x 100 | 14 | 4336.5 |
| SK 11282 | AZSH | SN 180/230 V | 610650 | 1.9 | M20 x 100 | 12 | 4336.5 |
| SK 12382 | AZSH | SN 180/230 V | 796500 | 4.5 | M30 x 200 | 16 | 15045.0 |

### Heavy Duty Shrink Disc

| Gear unit type | | Heavy Duty Shrink disc | | | Class 10.9 Hexagonal screw | | |
|---|---|---|---|---|---|---|---|
| | | Type | $T_{2max}$ [lb-in] | Safety Factor [h6] | Size | Qty | Torque [lb-in] |
| SK 7282 | AZVSH | SN 85/108 VS | 73455 | 3.90 | M16 x 90 | 10 | 2212.5 |
| SK 8282 | AZVSH | SN 100/128 VS | 116820 | 3.57 | M20 x 100 | 8 | 4336.5 |
| SK 9282 | AZVSH | SN 130/158 VS | 224790 | 3.89 | M20 x 130 | 12 | 4336.5 |
| SK 11282 | AZVSH | SN 180/230 VS | 610650 | 3.69 | M24 x 150 | 16 | 7434.0 |

The data listed also applies to Clincher gear units with a higher number of stages.


Send Quote Requests to info@automatedpt.com
Call +1(800)985-6929 To Order or Order Online At Nordgearmotors.com

Send Quote Requests to info@automatedpt.com Call +1(800)985-6929 To Order or Order Online At Nordgearmotors.com







## Helical-bevel gear units

| Gear unit type | | Shrink disc | | | Class 10.9 Hexagonal screw | | |
|---|---|---|---|---|---|---|---|
| | | Type | $T_{2max}$ [lb-in] | Safety Factor [h6] | Size | Qty | Torque [lb-in] |
| SK 92072 | AZSH | SN 25/34 V | 797 | 4.19 | M5 x 25 | 6 | 62.0 |
| SK 92172 | AZSH | SN 25/35 V | 1062 | 4.23 | M5 x 25 | 8 | 62.0 |
| SK 92372 | AZSH | SN 30/40 V | 2036 | 4.26 | M6 x 35 | 8 | 106.2 |
| SK 92672 | AZSH | SN 35/46 V | 3363 | 3.77 | M6 x 35 | 10 | 106.2 |
| SK 92772 | AZSH | SN 40/55 V | 5841 | 3.53 | M8 x 40 | 8 | 265.5 |
| SK 9012.1 | AZSH | SN 35/46 V | 3540 | 3.58 | M6 x 35 | 10 | 106.2 |
| SK 9016.1 | AZSH | SN 40/46 V | 5399 | 3.40 | M6 x 35 | 10 | 106.2 |
| SK 9022.1 | AZSH | SN 40/55 V | 7611 | 2.71 | M8 x 40 | 8 | 265.5 |
| SK 9032.1 | AZSH | SN 50/62 V | 13718 | 2.83 | M8 x 40 | 10 | 265.5 |
| SK 9042.1 | AZSH | SN 60/76 V | 24780 | 2.90 | M10 x 50 | 10 | 522.2 |
| SK 9052.1 | AZSH | SN 70/90 V | 42480 | 2.87 | M12 x 70 | 10 | 885.0 |
| SK 9072.1 | AZSH | SN 95/108 V | 75225 | 3.70 | M12 x 70 | 14 | 885.0 |
| SK 9082.1 | AZSH | SN 110/138 V | 115050 | 2.66 | M16 x 70 | 8 | 2212.5 |
| SK 9086.1 | AZSH | SN 125/158 V | 177000 | 2.91 | M16 x 80 | 12 | 2212.5 |
| SK 9092.1 | AZSH | SN 150/185 V | 283200 | 2.66 | M16 x 80 | 14 | 2212.5 |

### Heavy Duty Shrink Disc

| Gear unit type | | Heavy Duty Shrink disc | | | Class 10.9 Hexagonal screw | | |
|---|---|---|---|---|---|---|---|
| | | Type | $T_{2max}$ [lb-in] | Safety Factor [h6] | Size | Qty | Torque [lb-in] |
| SK 9072.1 | AZVSH | SN 95/108 VS | 75225 | 4.95 | M16 x 90 | 10 | 2212.5 |
| SK 9082.1 | AZVSH | SN 110/138 VS | 115050 | 6.26 | M20 x 130 | 12 | 4336.5 |
| SK 9086.1 | AZVSH | SN 130/158 VS | 177000 | 4.95 | M20 x 130 | 12 | 4336.5 |
| SK 9092.1 | AZVSH | SN 150/195 VS | 283200 | 3.93 | M20 x 100 | 14 | 7434.0 |

## Helical-worm gear units

| Gear unit type | | Shrink disc | | | Class 10.9 Hexagonal screw | | |
|---|---|---|---|---|---|---|---|
| | | Type | $T_{2max}$ [lb-in] | Safety Factor [h6] | Size | Qty | Torque [lb-in] |
| SK 02050 | AZSH | SN 25/35 V | 1611 | 2.8 | M5 x 25 | 8 | 106.2 |
| SK 02050 | AZSH | SN 30/40 V | 1611 | 5.4 | M6 x 35 | 8 | 106.2 |
| SK 12063 | AZSH | SN 30/40 V | 3390 | 2.6 | M6 x 35 | 8 | 106.2 |
| SK 12063 | AZSH | SN 35/46 V | 3390 | 3.0 | M6 x 35 | 10 | 106.2 |
| SK 12080 | AZSH | SN 40/55 V | 6894 | 3.0 | M8 x 40 | 8 | 265.5 |
| SK 12080 | AZSH | SN 45/55 V | 6894 | 4.1 | M8 x 40 | 8 | 265.5 |
| SK 32100 | AZSH | SN 50/62 V | 14195 | 2.7 | M8 x 40 | 10 | 265.5 |
| SK 32100 | AZSH | SN 60/76 V | 14195 | 5.1 | M10 x 50 | 10 | 522.2 |
| SK 42125 | AZSH | SN 60/76 V | 27612 | 2.6 | M10 x 50 | 10 | 522.2 |
| SK 42125 | AZSH | SN 70/90 V | 27612 | 4.4 | M12 x 70 | 10 | 885.0 |

The data listed also applies to helical-bevel and helical-worm gear units with a higher number of stages.



Send Quote Requests to info@automatedpt.com
Call +1(800)985-6929 To Order or Order Online At Nordgearmotors.com

# Shrink Discs Compatibility



DRIVESYSTEMS

## Shrink Discs

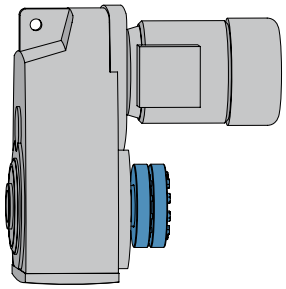

### Available Clincher™ gear unit motors with shrink discs

| Gear Unit | Motor | | | | | | | | | | | | | | |
|---|---|---|---|---|---|---|---|---|---|---|---|---|---|---|---|
| | 63 S/L | 71 S/L | 80 S/L | 90 S/L | 100 L 100 LA | 112 M | 132 SM | 160 M/L | 180 MX/LX | 200 L | 225 S/M | 250 M | 280 S/M | 315 S/M | 315 MA/L |
| SK 0182 NB AZSH | | | | | | | | | | | | | | | |
| SK 0282 NB AZSH | ✓ | | | | | | | | | | | | | | |
| SK 1282 AZSH | ✓ | ✓ | ✓ | | | | | | | | | | | | |
| SK 1382 NB AZSH | ✓ | | | | | | | | | | | | | | |
| SK 2282 AZSH | | ✓ | ✓ | ✓ | ✓ | | | | | | | | | | |
| SK 2382 AZSH | | | | | | | | | | | | | | | |
| SK 3282 AZSH | | ✓ | ✓ | ✓ | ✓ | | | | | | | | | | |
| SK 3382 AZSH | | | ✓ | ✓ | | | | | | | | | | | |
| SK 4282 AZSH | | | | ✓ | ✓ | ✓ | ✓ | | | | | | | | |
| SK 4382 AZSH | | | | | | | | | | | | | | | |
| SK 5282 AZSH | | | | ✓ | ✓ | ✓ | ✓ | ✓ | | | | | | | |
| SK 5382 AZSH | | | | | | | | | | | | | | | |
| SK 6282 AZSH | | | | | ✓ | ✓ | ✓ | ✓ | ✓ | | | | | | |
| SK 6382 AZSH | | | | ✓ | ✓ | ✓ | ✓ | ✓ | ✓ | | | | | | |
| SK 7282 AZSH | | | | | | | ✓ | ✓ | ✓ | ✓ | * | | | | |
| SK 7382 AZSH | | | | | ✓ | ✓ | ✓ | ✓ | ✓ | ✓ | * | | | | |
| SK 8282 AZSH | | | | | | | ✓ | ✓ | ✓ | ✓ | ✓ | | | | |
| SK 8382 AZSH | | | | | ✓ | ✓ | ✓ | ✓ | ✓ | ✓ | ✓ | | | | |
| SK 9282 AZSH | | | | | | | | | | ✓ | ✓ | ✓ | ✓ | | |
| SK 9382 AZSH | | | | | | | ✓ | ✓ | ✓ | ✓ | ✓ | ✓ | ✓ | | |
| SK 10282 AZSH | | | | | | | | | | | | | ✓ | ✓ | ✓ |
| SK 10382 AZSH | | | | | | | | ✓ | ✓ | ✓ | ✓ | ✓ | ✓ | ✓ | ✓ |
| SK 11282 AZSH | | | | | | | | | | | | | ✓ | ✓ | ✓ |
| SK 11382 AZSH | | | | | | | | ✓ | ✓ | ✓ | ✓ | ✓ | ✓ | ✓ | ✓ |
| SK 12382 AZSH | | | | | | | | | | ✓ | ✓ | ✓ | ✓ | ✓ | ✓ |

*** Upon Request**

### Heavy Duty Shrink Disc

| | | | | | | | | | | | | | | | |
|---|---|---|---|---|---|---|---|---|---|---|---|---|---|---|---|
| SK 7282 AZVSH | | | | | | | ✓ | ✓ | ✓ | | | | | | |
| SK 7382 AZVSH | | | | | ✓ | ✓ | ✓ | ✓ | ✓ | | | | | | |
| SK 8282 AZVSH | | | | | | | ✓ | ✓ | ✓ | ✓ | * | | | | |
| SK 8382 AZVSH | | | | | ✓ | ✓ | ✓ | ✓ | ✓ | ✓ | * | | | | |
| SK 9282 AZVSH | | | | | | | | | | ✓ | ✓ | ✓ | ✓ | | |
| SK 9382 AZVSH | | | | | | | ✓ | ✓ | ✓ | ✓ | ✓ | ✓ | ✓ | | |
| SK 11282 AZVSH | | | | | | | | | | | | | ✓ | ✓ | ✓ |
| SK 11382 AZVSH | | | | | | | | ✓ | ✓ | ✓ | ✓ | ✓ | ✓ | ✓ | ✓ |

*** Upon Request**


Send Quote Requests to info@automatedpt.com
Call +1(800)985-6929 To Order or Order Online At Nordgearmotors.com

Send Quote Requests to info@automatedpt.com
Call +1(800)985-6929 To Order or Order Online At Nordgearmotors.com



## Clincher Unit Shrink Discs (AS & AVS)

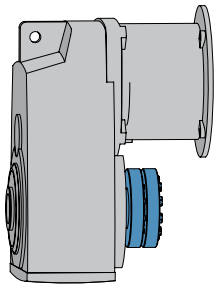

### Available Clincher™ gear unit with shrink discs and NEMA adapters

| Gear Unit | Motor | | | | | | | |
|---|---|---|---|---|---|---|---|---|
| | 56C | 140TC | 180TC | 210TC | 250TC | 280TC | 320TC | 360TC |
| SK 0182 NB AZSH | | | | | | | | |
| SK 0282 NB AZSH | ✓ | ✓ | | | | | | |
| SK 1282 AZSH | ✓ | ✓ | | | | | | |
| SK 1382 NB AZSH | ✓ | ✓ | | | | | | |
| SK 2282 AZSH | ✓ | ✓ | | | | | | |
| SK 2382 AZSH | | | | | | | | |
| SK 3282 AZSH | ✓ | ✓ | ✓ | ✓ | | | | |
| SK 3382 AZSH | ✓ | ✓ | | | | | | |
| SK 4282 AZSH | ✓ | ✓ | ✓ | ✓ | ✓ | | | |
| SK 4382 AZSH | | | | | | | | |
| SK 5282 AZSH | ✓ | ✓ | ✓ | ✓ | ✓ | ✓ | | |
| SK 5382 AZSH | | | | | | | | |
| SK 6282 AZSH | | | ✓ | ✓ | ✓ | ✓ | ✓ | ✓ |
| SK 6382 AZSH | ✓ | ✓ | ✓ | ✓ | ✓ | ✓ | | |
| SK 7282 AZSH | | | ✓ | ✓ | ✓ | ✓ | ✓ | ✓ |
| SK 7382 AZSH | | | ✓ | ✓ | ✓ | ✓ | ✓ | ✓ |
| SK 8282 AZSH | | | ✓ | ✓ | ✓ | ✓ | ✓ | |
| SK 8382 AZSH | | | ✓ | ✓ | ✓ | ✓ | ✓ | ✓ |
| SK 9282 AZSH | | | ✓ | ✓ | ✓ | ✓ | ✓ | ✓ |
| SK 9382 AZSH | | | ✓ | ✓ | ✓ | ✓ | ✓ | ✓ |
| SK 10282 AZSH | | | | | | | | ✓ |
| SK 10382 AZSH | | | ✓ | ✓ | ✓ | ✓ | ✓ | ✓ |
| SK 11282 AZSH | | | | | | | | ✓ |
| SK 11382 AZSH | | | ✓ | ✓ | ✓ | ✓ | ✓ | ✓ |
| SK 12382 AZSH | | | | | ✓ | ✓ | ✓ | ✓ |

### Heavy Duty Shrink Disc

| | | | | | | | | |
|---|---|---|---|---|---|---|---|---|
| SK 7282 AZVSH | | | ✓ | ✓ | ✓ | ✓ | ✓ | ✓ |
| SK 7382 AZVSH | | | ✓ | ✓ | ✓ | ✓ | ✓ | ✓ |
| SK 8282 AZVSH | | | ✓ | ✓ | ✓ | ✓ | ✓ | ✓ |
| SK 8382 AZVSH | | | ✓ | ✓ | ✓ | ✓ | ✓ | ✓ |
| SK 9282 AZVSH | | | ✓ | ✓ | ✓ | ✓ | ✓ | ✓ |
| SK 9382 AZVSH | | | ✓ | ✓ | ✓ | ✓ | ✓ | ✓ |
| SK 11282 AZVSH | | | | | | | | ✓ |
| SK 11382 AZVSH | | | ✓ | ✓ | ✓ | ✓ | ✓ | ✓ |


Send Quote Requests to info@automatedpt.com
Call +1(800)985-6929 To Order or Order Online At Nordgearmotors.com

# Helical In-line Weights - Gearmotor

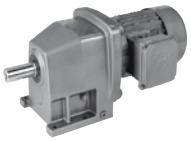

lb

NORD DRIVESYSTEMS

## Approximate Weights [lb]

| Type | 63S | 63 L | 71 S | 71 L | 80 S | 80 L | 90 S | 90 L | 100 L | 100 LA | 132 S | 132 M | 160 M | 160 L | 180 MX | 180 LX | 200 L | 225 S | 225 M | 250 M | 280 S | 280 M | 315 S | 315 M | 315 MA |
|---|---|---|---|---|---|---|---|---|---|---|---|---|---|---|---|---|---|---|---|---|---|---|---|---|---|
| **SK 02** | 26 | 27 | 30 | 32 | 35 | 37 | 44 | 49 | – | – | – | – | – | – | – | – | – | – | – | – | – | – | – | – | – |
| **SK 03** | 34 | 36 | 38 | – | – | – | – | – | – | – | – | – | – | – | – | – | – | – | – | – | – | – | – | – | – |
| **SK 11** | 21 | 22 | 25 | 27 | 31 | 33 | 40 | 44 | 53 | 60 | – | – | – | – | – | – | – | – | – | – | – | – | – | – | – |
| **SK 12** | 30 | 31 | 34 | 36 | 40 | 42 | 49 | 53 | 62 | 68 | – | – | – | – | – | – | – | – | – | – | – | – | – | – | – |
| **SK 13** | 41 | 42 | 45 | 47 | – | – | – | – | – | – | – | – | – | – | – | – | – | – | – | – | – | – | – | – | – |
| **SK 12/02** | 48 | 49 | 52 | – | – | – | – | – | – | – | – | – | – | – | – | – | – | – | – | – | – | – | – | – | – |
| **SK 21** | – | – | – | – | – | – | – | – | 66 | 73 | – | – | – | – | – | – | – | – | – | – | – | – | – | – | – |
| **SK 22** | – | – | 54 | 56 | 60 | 62 | 64 | 73 | 82 | 88 | – | – | – | – | – | – | – | – | – | – | – | – | – | – | – |
| **SK 23** | 67 | 69 | 71 | 73 | 77 | 79 | – | – | – | – | – | – | – | – | – | – | – | – | – | – | – | – | – | – | – |
| **SK 22/02** | 75 | 77 | – | – | – | – | – | – | – | – | – | – | – | – | – | – | – | – | – | – | – | – | – | – | – |
| **SK 31** | – | – | – | – | – | – | – | – | – | 84 | 135 | 159 | – | – | – | – | – | – | – | – | – | – | – | – | – |
| **SK 32** | – | – | – | 80 | 84 | 86 | 93 | 97 | 106 | 112 | 163 | 187 | – | – | – | – | – | – | – | – | – | – | – | – | – |
| **SK 33 N** | 94 | 95 | 98 | 100 | 104 | 106 | 112 | – | – | – | – | – | – | – | – | – | – | – | – | – | – | – | – | – | – |
| **SK 32/12** | 104 | 105 | 108 | – | 114 | – | – | – | – | – | – | – | – | – | – | – | – | – | – | – | – | – | – | – | – |
| **SK 41** | – | – | – | – | – | – | – | – | – | – | 154 | 179 | 218 | 256 | – | – | – | – | – | – | – | – | – | – | – |
| **SK 42** | – | – | – | – | – | – | 126 | 130 | 139 | 146 | 196 | 221 | 260 | 298 | – | – | – | – | – | – | – | – | – | – | – |
| **SK 43** | – | – | 144 | 146 | 150 | 152 | 159 | 163 | 172 | 179 | – | – | – | – | – | – | – | – | – | – | – | – | – | – | – |
| **SK 42/12** | 142 | 144 | 146 | 148 | – | – | – | – | – | – | – | – | – | – | – | – | – | – | – | – | – | – | – | – | – |
| **SK 51** | – | – | – | – | – | – | – | – | – | – | – | – | 238 | 276 | 329 | 329 | – | – | – | – | – | – | – | – | – |
| **SK 52** | – | – | – | – | – | – | 190 | 194 | 203 | 209 | 260 | 284 | 324 | 362 | 415 | 415 | – | – | – | – | – | – | – | – | – |
| **SK 53** | – | – | – | – | 223 | 225 | 232 | 236 | 245 | 251 | – | – | – | – | – | – | – | – | – | – | – | – | – | – | – |
| **SK 52/12** | 206 | 208 | 210 | 212 | – | – | – | – | – | – | – | – | – | – | – | – | – | – | – | – | – | – | – | – | – |
| **SK 62** | – | – | – | – | – | – | – | – | – | – | 386 | 410 | 450 | 487 | 540 | 540 | 697 | 770 | 842 | – | – | – | – | – | – |
| **SK 63** | – | – | – | – | – | – | 311 | 315 | 324 | 331 | 381 | 406 | 445 | 483 | 536 | 536 | – | – | – | – | – | – | – | – | – |
| **SK 63/22** | – | – | – | 340 | 344 | 346 | 353 | 357 | – | – | – | – | – | – | – | – | – | – | – | – | – | – | – | – | – |
| **SK 63/23** | – | 353 | 356 | 358 | 362 | – | – | – | – | – | – | – | – | – | – | – | – | – | – | – | – | – | – | – | – |
| **SK 72** | – | – | – | – | – | – | – | – | – | – | – | – | 602 | 639 | 692 | 692 | 849 | 922 | 994 | – | – | – | – | – | – |
| **SK 73** | – | – | – | – | – | – | – | – | 503 | 509 | 560 | 584 | 624 | 662 | 714 | 714 | 871 | 944 | 1017 | – | – | – | – | – | – |
| **SK 73/22** | – | – | – | – | 523 | 525 | 531 | 536 | 545 | – | – | – | – | – | – | – | – | – | – | – | – | – | – | – | – |
| **SK 73/32** | – | – | – | 519 | – | – | – | 560 | 569 | 576 | – | – | – | – | – | – | – | – | – | – | – | – | – | – | – |
| **SK 82** | – | – | – | – | – | – | – | – | – | – | – | – | 842 | 880 | – | – | 1089 | 1162 | 1235 | 1641 | 2026 | – | – | – | – |
| **SK 83** | – | – | – | – | – | – | – | – | – | 745 | 796 | 820 | 860 | 897 | 950 | 950 | 1107 | 1180 | 1252 | – | – | – | – | – | – |
| **SK 83/32** | – | – | – | – | 783 | 785 | 792 | 796 | – | – | – | – | – | – | – | – | – | – | – | – | – | – | – | – | – |
| **SK 83/42** | – | – | – | – | – | – | 825 | 829 | 838 | 845 | 895 | 919 | – | – | – | – | – | – | – | – | – | – | – | – | – |
| **SK 92** | – | – | – | – | – | – | – | – | – | – | – | – | – | – | – | – | – | – | 1623 | 2029 | 2414 | 2525 | 2900 | 3076 | 3407 |
| **SK 93** | – | – | – | – | – | – | – | – | – | – | 1191 | 1215 | 1255 | 1292 | 1345 | 1345 | 1502 | 1574 | 1647 | 2053 | 2439 | – | – | – | – |
| **SK 93/42** | – | – | – | – | – | – | 1219 | 1224 | 1233 | 1239 | 1290 | 1314 | 1354 | – | – | – | – | – | – | – | – | – | – | – | – |
| **SK 93/52** | – | – | – | – | – | – | – | – | – | – | – | 1378 | – | – | – | – | – | – | – | – | – | – | – | – | – |
| **SK 102** | – | – | – | – | – | – | – | – | – | – | – | – | – | – | – | – | – | – | – | – | 2902 | 3012 | 3387 | 3563 | 3894 |
| **SK 103** | – | – | – | – | – | – | – | – | – | – | 1674 | 1698 | 1738 | 1775 | 1828 | 1828 | 1985 | 2057 | 2130 | 2536 | 2922 | 3032 | 3407 | – | – |
| **SK 103/52** | – | – | – | – | – | – | 1766 | 1771 | 1779 | 1786 | 1837 | 1861 | 1901 | 1938 | 1991 | 1991 | – | – | – | – | – | – | – | – | – |

Above weights are approximate. Depending upon ratio, oil quantity and optional equipment, reducer weights may be different than shown.
Exact weights can be obtained after the unit is fully asembled.


Send Quote Requests to info@automatedpt.com
Call +1(800)985-6929 To Order or Order Online At Nordgearmotors.com

Send Quote Requests to info@automatedpt.com
Call +1(800)985-6929 To Order or Order Online At Nordgearmotors.com



## Approximate Weights [lb]

| Type | W | 56C | 140TC | 180TC | 210TC | 250TC | 280TC | 320TC | 360TC |
|---|---|---|---|---|---|---|---|---|---|
| **SK 02** | 26 | 44 | 44 | – | – | – | – | – | – |
| **SK 03** | 35 | – | – | – | – | – | – | – | – |
| **SK 11** | 35 | 35 | 49 | – | – | – | – | – | – |
| **SK 12** | 48 | 48 | 57 | – | – | – | – | – | – |
| **SK 13** | 46 | – | – | – | – | – | – | – | – |
| **SK 12/02** | 49 | 49 | – | – | – | – | – | – | – |
| **SK 21** | 49 | 46 | 46 | 59 | – | – | – | – | – |
| **SK 22** | 64 | 73 | 73 | 77 | – | – | – | – | – |
| **SK 23** | 68 | 86 | 86 | – | – | – | – | – | – |
| **SK 22/02** | 77 | 93 | 93 | – | – | – | – | – | – |
| **SK 31** | 59 | 62 | 62 | 66 | – | – | – | – | – |
| **SK 32** | 88 | 90 | 90 | 95 | – | – | – | – | – |
| **SK 33 N** | 95 | 103 | 103 | | – | – | – | – | – |
| **SK 32/12** | 106 | 115 | 115 | 132 | – | – | – | – | – |
| **SK 41** | 101 | 91 | 88 | 92 | 130 | 159 | – | – | – |
| **SK 42** | 143 | 138 | 132 | 143 | 174 | 201 | – | – | – |
| **SK 43** | 154 | 152 | 152 | 156 | – | – | – | – | – |
| **SK 42/12** | 143 | 148 | 148 | 170 | – | – | – | – | – |
| **SK 51** | 121 | 105 | 105 | 117 | 147 | 150 | 199 | – | – |
| **SK 52** | 207 | 169 | 169 | 174 | 205 | 207 | 285 | – | – |
| **SK 53** | 227 | 185 | 185 | 189 | – | – | – | – | – |
| **SK 52/12** | 207 | 179 | 179 | 234 | – | – | – | – | – |
| **SK 62** | 377 | – | – | 317 | 354 | 392 | 392 | 567 | 567 |
| **SK 63** | 328 | 295 | 288 | 299 | 330 | 332 | 405 | – | – |
| **SK 63/22** | 348 | 329 | 329 | 333 | – | – | – | – | – |
| **SK 63/23** | 353 | 335 | 335 | – | – | – | – | – | – |
| **SK 72** | 529 | | | 440 | 477 | 515 | 515 | 721 | 721 |
| **SK 73** | 551 | | | 416 | 453 | 491 | 491 | 743 | 743 |
| **SK 73/22** | 527 | 452 | 452 | 456 | – | – | – | – | – |
| **SK 73/32** | 551 | 553 | 553 | 558 | 571 | – | – | – | – |
| **SK 82** | 880 | – | – | 666 | 702 | 741 | 741 | 962 | 962 |
| **SK 83** | 787 | – | – | 631 | 669 | 706 | 706 | 979 | 979 |
| **SK 83/32** | 787 | 723 | 723 | 728 | 741 | – | – | – | – |
| **SK 83/42** | 842 | 837 | 837 | 848 | 879 | 906 | – | – | – |
| **SK 92** | 1268 | – | – | – | – | 1215 | 1215 | 1350 | 1350 |
| **SK 93** | 1182 | – | – | 1184 | 1184 | 1239 | 1239 | 1374 | 1374 |
| **SK 93/42** | 1237 | 1226 | 1226 | 1272 | 1272 | 1294 | – | – | – |
| **SK 93/52** | 1301 | – | – | 1276 | 1306 | 1308 | 1308 | – | – |
| **SK 102** | 1821 | – | – | – | – | – | 1702 | 1837 | 1837 |
| **SK 103** | 1775 | – | – | 1667 | 1667 | 1722 | 1722 | 1857 | 1857 |
| **SK 103/52** | 1784 | 1773 | 1773 | 1819 | 1819 | 1840 | 1860 | – | – |

Above weights are approximate. Depending upon ratio, oil quantity and optional equipment, reducer weights may be different than shown.

Exact weights can be obtained after the unit is fully asembled.


Send Quote Requests to info@automatedpt.com
Call +1(800)985-6929 To Order or Order Online At Nordgearmotors.com

# Clincher™ Shaft Mount Weights - Gearmotor



lb

NORD DRIVESYSTEMS

## Approximate Weights [lb]

| Type | 63S | 63 L | 71 S | 71 L | 80 S | 80 L | 90 S | 90 L | 100 L | 100 LA | 132 S | 132 M | 160 M | 160 L | 180 MX | 180 LX | 200 L | 225 S | 225 M | 250 M | 280 S | 280 M | 315 S | 315 M | 315 MA |
|---|---|---|---|---|---|---|---|---|---|---|---|---|---|---|---|---|---|---|---|---|---|---|---|---|---|
| **SK 0182 NB** | 17 | 18 | 21 | 23 | 26 | 29 | 35 | – | – | – | – | – | – | – | – | – | – | – | – | – | – | – | – | – | – |
| **SK 0282 NB** | 26 | 27 | 30 | 32 | 35 | 37 | 44 | 49 | – | – | – | – | – | – | – | – | – | – | – | – | – | – | – | – | – |
| **SK 1282** | 39 | 40 | 43 | 45 | 49 | 51 | 57 | 62 | 71 | 77 | – | – | – | – | – | – | – | – | – | – | – | – | – | – | – |
| **SK 1382 NB** | 52 | 53 | 56 | 58 | 62 | 64 | 71 | 75 | 84 | – | – | – | – | – | – | – | – | – | – | – | – | – | – | – | – |
| **SK 1282/02** | 56 | 58 | – | – | – | – | – | – | – | – | – | – | – | – | – | – | – | – | – | – | – | – | – | – | – |
| **SK 2282** | – | – | 67 | 69 | 73 | 75 | 82 | 86 | 95 | 101 | – | – | – | – | – | – | – | – | – | – | – | – | – | – | – |
| **SK 2382** | 78 | 80 | 82 | 84 | 88 | 90 | 97 | – | – | – | – | – | – | – | – | – | – | – | – | – | – | – | – | – | – |
| **SK 2282/02** | 81 | 82 | – | – | – | – | – | – | – | – | – | – | – | – | – | – | – | – | – | – | – | – | – | – | – |
| **SK 3282** | – | – | – | 102 | 106 | 108 | 115 | 119 | 128 | 135 | 185 | 209 | – | – | – | – | – | – | – | – | – | – | – | – | – |
| **SK 3382** | 114 | 115 | 118 | 120 | 123 | 126 | – | – | – | – | – | – | – | – | – | – | – | – | – | – | – | – | – | – | – |
| **SK 3282/12** | 118 | 120 | – | – | – | – | – | – | – | – | – | – | – | – | – | – | – | – | – | – | – | – | – | – | – |
| **SK 4282** | – | – | – | – | – | – | 148 | 152 | 161 | 168 | 218 | 243 | 282 | 320 | – | – | – | – | – | – | – | – | – | – | – |
| **SK 4382** | – | – | 166 | 168 | 172 | 174 | 181 | 185 | – | – | – | – | – | – | – | – | – | – | – | – | – | – | – | – | – |
| **SK 4282/12** | 151 | 153 | 155 | 157 | – | – | – | – | – | – | – | – | – | – | – | – | – | – | – | – | – | – | – | – | – |
| **SK 5282** | – | – | – | – | – | – | 227 | 232 | 240 | 247 | 298 | 322 | 362 | 399 | – | 452 | – | – | – | – | – | – | – | – | – |
| **SK 5382** | – | – | – | – | 260 | 262 | 269 | 273 | 282 | 289 | – | – | – | – | – | – | – | – | – | – | – | – | – | – | – |
| **SK 5282/12** | – | – | 235 | 237 | 240 | – | – | – | – | – | – | – | – | – | – | – | – | – | – | – | – | – | – | – | – |
| **SK 6282** | – | – | – | – | – | – | – | – | – | 432 | 483 | 507 | 547 | 584 | 637 | 637 | – | 867 | 939 | – | – | – | – | – | – |
| **SK 6382** | – | – | – | – | – | – | 406 | 410 | 419 | 426 | 476 | 501 | 540 | 578 | 631 | 631 | – | – | – | – | – | – | – | – | – |
| **SK 6382/22** | – | – | – | – | 439 | 441 | 448 | 452 | – | – | – | – | – | – | – | – | – | – | – | – | – | – | – | – | – |
| **SK 7282** | – | – | – | – | – | – | – | – | – | – | 622 | 646 | 686 | 723 | 776 | 776 | 933 | 1005 | 1078 | – | – | – | – | – | – |
| **SK 7382** | – | – | – | – | – | – | – | – | 580 | 587 | 637 | 662 | 701 | 739 | 792 | 792 | 948 | 1021 | 1094 | – | – | – | – | – | – |
| **SK 7382/22** | – | – | – | – | 600 | 602 | 609 | 613 | 622 | – | – | – | – | – | – | – | – | – | – | – | – | – | – | – | – |
| **SK 8282** | – | – | – | – | – | – | – | – | – | – | 904 | – | 968 | 1005 | – | 1058 | 1215 | 1288 | 1360 | 1766 | 2152 | – | – | – | – |
| **SK 8382** | – | – | – | – | – | – | – | – | 856 | 862 | 913 | 937 | 977 | 1014 | 1067 | 1067 | 1224 | 1297 | 1369 | – | – | – | – | – | – |
| **SK 8382/32** | – | – | – | – | 900 | 902 | 908 | 913 | 922 | 928 | – | – | – | – | – | – | – | – | – | – | – | – | – | – | – |
| **SK 8382/42** | – | – | – | – | – | – | – | 946 | 955 | 961 | – | – | – | – | – | – | – | – | – | – | – | – | – | – | – |
| **SK 9282** | – | – | – | – | – | – | – | – | – | – | – | – | – | – | – | – | – | 1951 | 2024 | 2430 | 2816 | 2926 | 3301 | 3477 | 3808 |
| **SK 9382** | – | – | – | – | – | – | – | – | – | – | 1579 | 1603 | 1643 | 1680 | 1733 | 1733 | 1890 | 1962 | 2035 | 2441 | 2827 | – | – | – | – |
| **SK 9382/42** | – | – | – | – | – | – | 1607 | 1612 | 1621 | 1627 | 1678 | – | – | – | – | – | – | – | – | – | – | – | – | – | – |
| **SK 9382/52** | – | – | – | – | – | – | – | – | – | 1691 | – | – | 1806 | – | 1896 | – | – | – | – | – | – | – | – | – | – |
| **SK 10282** | – | – | – | – | – | – | – | – | – | – | – | – | – | – | – | – | – | – | – | – | – | 4126 | 4500 | 4677 | 5008 |
| **SK 10382** | – | – | – | – | – | – | – | – | – | – | – | 2847 | 2886 | 2924 | 2977 | 2977 | 3133 | 3206 | 3279 | 3685 | 4070 | 4181 | 4556 | 4732 | 5063 |
| **SK 10382/52** | – | – | – | – | – | – | – | – | 2928 | 2935 | 2986 | 3010 | 3050 | 3087 | 3140 | 3140 | – | – | – | – | – | – | – | – | – |
| **SK 11282** | – | – | – | – | – | – | – | – | – | – | – | – | – | – | – | – | – | – | – | – | – | 5859 | 6234 | 6410 | 6741 |
| **SK 11382** | – | – | – | – | – | – | – | – | – | – | – | – | – | 4772 | 4825 | 4825 | 4981 | 5054 | 5127 | 5532 | 5918 | 6028 | 6403 | 6580 | 6910 |
| **SK 11382/52** | – | – | – | – | – | – | – | – | – | 4783 | 4833 | 4858 | 4897 | 4935 | 4988 | 4988 | – | – | – | – | – | – | – | – | – |
| **SK12382** | – | – | – | – | – | – | – | – | – | – | – | – | 4734 | 4772 | 4825 | 4825 | 4981 | 5054 | 5127 | 5532 | 5918 | 6028 | 6403 | 6580 | 6910 |

Above weights are approximate. Depending upon ratio, oil quantity and optional equipment, reducer weights may be different than shown.

Exact weights can be obtained after the unit is fully asembled.


Send Quote Requests to info@automatedpt.com
Call +1(800)985-6929 To Order or Order Online At Nordgearmotors.com



# Clincher™ Shaft Mount Weights - Reducer



## Approximate Weights [lb]

| Type | W | 56C | 140TC | 180TC | 210TC | 250TC | 280TC | 320TC | 360TC |
|---|---|---|---|---|---|---|---|---|---|
| **SK 0182 NB** | 13 | 22 | 22 | – | – | – | – | – | – |
| **SK 0282 NB** | 22 | 31 | 31 | – | – | – | – | – | – |
| **SK 1282** | 40 | 51 | 51 | 66 | – | – | – | – | – |
| **SK 1382 NB** | 49 | 57 | 57 | 68 | – | – | – | – | – |
| **SK 1282/02** | 57 | 68 | – | – | – | – | – | – | – |
| **SK 2282** | 77 | 82 | 82 | 90 | – | – | – | – | – |
| **SK 2382** | 79 | 90 | 90 | – | – | – | – | – | – |
| **SK 2282/02** | 82 | 93 | – | – | – | – | – | – | – |
| **SK 3282** | 110 | 115 | 115 | 124 | 143 | – | – | – | – |
| **SK 3382** | 115 | 126 | 126 | – | – | – | – | – | – |
| **SK 3282/12** | 119 | 130 | 130 | – | – | – | – | – | – |
| **SK 4282** | 165 | 154 | 154 | 170 | 201 | 223 | – | – | – |
| **SK 4382** | 176 | 181 | 181 | 190 | – | – | – | – | – |
| **SK 4282/12** | 152 | 163 | 163 | 179 | – | – | – | – | – |
| **SK 5282** | 245 | 234 | 234 | 249 | 280 | 302 | 322 | – | – |
| **SK 5382** | 265 | 269 | 269 | 278 | 278 | – | – | – | – |
| **SK 5282/12** | 231 | 243 | 243 | 258 | – | – | – | – | – |
| **SK 6282** | 474 | | | 448 | 476 | 531 | 531 | 562 | 562 |
| **SK 6382** | 423 | 412 | 412 | 428 | 459 | 481 | 481 | – | – |
| **SK 6382/22** | 443 | 448 | 448 | 456 | – | – | – | – | – |
| **SK 6382/32** | 467 | 472 | 472 | 481 | 501 | – | – | – | – |
| **SK 7282** | 613 | – | – | 587 | 615 | 670 | 670 | 701 | 734 |
| **SK 7382** | 628 | – | – | 602 | 631 | 686 | 686 | 717 | 750 |
| **SK 7382/22** | 604 | 609 | 609 | 618 | – | – | – | – | – |
| **SK 7382/32** | 628 | 633 | 633 | 642 | 662 | – | – | – | – |
| **SK 8282** | 1061 | – | – | 869 | 897 | 953 | 953 | 983 | 1138 |
| **SK 8382** | 904 | – | – | 878 | 906 | 961 | 961 | 992 | 1025 |
| **SK 8382/32** | 904 | 908 | 908 | 917 | – | – | – | – | – |
| **SK 8382/42** | 959 | 948 | 948 | 964 | 994 | – | – | – | – |
| **SK 9282** | 1724 | – | – | – | – | – | 1616 | 1647 | 1801 |
| **SK 9382** | 1570 | – | – | 1645 | 1572 | 1627 | 1627 | 1658 | 1813 |
| **SK 9382/42** | 1625 | 1614 | 1614 | 1629 | 1660 | – | – | – | – |
| **SK 9382/52** | 1689 | – | – | 1693 | 1724 | 1746 | 1766 | – | – |
| **SK 10282** | 2825 | – | – | – | – | – | – | – | 3001 |
| **SK 10382** | 2880 | – | – | – | – | 2871 | 2871 | 2902 | 3056 |
| **SK 10382/52** | 2933 | 2922 | 2922 | 2937 | 2968 | 2990 | 2990 | – | – |
| **SK 11282** | 4558 | – | – | – | – | – | – | – | 4734 |
| **SK 11382** | 4728 | – | – | – | – | 4719 | 4719 | 4750 | 4904 |
| **SK 11382/52** | 4780 | 4769 | 4769 | 4785 | 4816 | 4838 | 4838 | – | – |
| **SK12382** | 4728 | – | – | – | – | 4719 | 4719 | 4750 | 4904 |

Above weights are approximate. Depending upon ratio, oil quantity and optional equipment, reducer weights may be different than shown.

Exact weights can be obtained after the unit is fully asembled.



Send Quote Requests to info@automatedpt.com
Call +1(800)985-6929 To Order or Order Online At Nordgearmotors.com

# Helical-Bevel Weights - Gearmotor



lb

NORD DRIVESYSTEMS

## Approximate Weights [lb]

| Type | 63S | 63 L | 71 S | 71 L | 80 S | 80 L | 90 S | 90 L | 100 L | 100 LA | 132 S | 132 M | 160 M | 160 L | 180 MX | 180 LX | 200 L | 225 S | 225 M | 250 M | 280 S | 280 M | 315 S | 315 M | 315 MA |
|---|---|---|---|---|---|---|---|---|---|---|---|---|---|---|---|---|---|---|---|---|---|---|---|---|---|
| **SK 92072** | 19 | 20 | 23 | 25 | 29 | 31 | 37 | 42 | – | – | – | – | – | – | – | – | – | – | – | – | – | – | – | – | – |
| **SK 92172** | 30 | 31 | 34 | 36 | 40 | 42 | 49 | 53 | – | – | – | – | – | – | – | – | – | – | – | – | – | – | – | – | – |
| **SK 92372** | 43 | 45 | 47 | 49 | 53 | 55 | 62 | 66 | 75 | 82 | – | – | – | – | – | – | – | – | – | – | – | – | – | – | – |
| **SK 92672** | – | 81 | 84 | 86 | 89 | 92 | 98 | 103 | 111 | 118 | 169 | – | – | – | – | – | – | – | – | – | – | – | – | – | – |
| **SK 9012.1** | 74 | 75 | 78 | 80 | 84 | 86 | 93 | 97 | 106 | 112 | – | – | – | – | – | – | – | – | – | – | – | – | – | – | – |
| **SK 9013.1** | 85 | 86 | – | – | – | – | – | – | – | – | – | – | – | – | – | – | – | – | – | – | – | – | – | – | – |
| **SK 9016.1** | – | 78 | 80 | 82 | 86 | 88 | 95 | 99 | 108 | 115 | – | – | – | – | – | – | – | – | – | – | – | – | – | – | – |
| **SK 9017.1** | 87 | 89 | 91 | 93 | – | – | – | – | – | – | – | – | – | – | – | – | – | – | – | – | – | – | – | – | – |
| **SK 92772** | – | – | – | – | 105 | 107 | 114 | 118 | 127 | 134 | 184 | – | – | – | – | – | – | – | – | – | – | – | – | – | – |
| **SK 9022.1** | – | – | 96 | 98 | 101 | 104 | 110 | 115 | 123 | 130 | – | – | – | – | – | – | – | – | – | – | – | – | – | – | – |
| **SK 9023.1** | 103 | 104 | 107 | 109 | – | – | – | – | – | – | – | – | – | – | – | – | – | – | – | – | – | – | – | – | – |
| **SK 9032.1** | – | – | 140 | 142 | 146 | 148 | 154 | 159 | 168 | 174 | 225 | 249 | – | – | – | – | – | – | – | – | – | – | – | – | – |
| **SK 9033.1** | 153 | 155 | 157 | 159 | 163 | 165 | – | – | – | – | – | – | – | – | – | – | – | – | – | – | – | – | – | – | – |
| **SK 9042.1** | – | – | – | – | – | – | 258 | 262 | 271 | 278 | 329 | 353 | 392 | 430 | – | – | – | – | – | – | – | – | – | – | – |
| **SK 9043.1** | – | – | 277 | 278 | 282 | 284 | 291 | – | – | – | – | – | – | – | – | – | – | – | – | – | – | – | – | – | – |
| **SK 9052.1** | – | – | – | – | – | – | 423 | 428 | 437 | 443 | 494 | 518 | 558 | 595 | 648 | 648 | – | – | – | – | – | – | – | – | – |
| **SK 9053.1** | – | – | – | 450 | 454 | 456 | 463 | 467 | – | – | – | – | – | – | – | – | – | – | – | – | – | – | – | – | – |
| **SK 9072.1** | – | – | – | – | – | – | – | – | 745 | 752 | 803 | 827 | 867 | 904 | 957 | 957 | 1114 | 1186 | 1259 | – | – | – | – | – | – |
| **SK 9072.1/32** | – | – | – | 794 | 798 | 800 | 807 | 811 | 820 | 827 | – | – | – | – | – | – | – | – | – | – | – | – | – | – | – |
| **SK 9072.1/42** | – | – | – | – | – | – | – | 849 | – | – | – | – | – | – | – | – | – | – | – | – | – | – | – | – | – |
| **SK 9082.1** | – | – | – | – | – | – | – | – | – | – | 1376 | 1400 | 1440 | 1477 | 1530 | 1530 | 1687 | 1760 | 1832 | 2238 | 2624 | 2734 | – | – | – |
| **SK 9082.1/42** | – | – | – | – | – | – | 1418 | 1422 | 1431 | – | 1488 | – | – | – | – | – | – | – | – | – | – | – | – | – | – |
| **SK 9082.1//52** | – | – | – | – | – | – | – | – | – | 1493 | – | – | – | – | – | – | – | – | – | – | – | – | – | – | – |
| **SK 9086.1** | – | – | – | – | – | – | – | – | – | – | 1927 | 1951 | 1991 | 2029 | 2082 | 2082 | 2238 | 2311 | 2384 | 2789 | 3175 | 3285 | 3660 | 3837 | 4167 |
| **SK 9086.1/52** | – | – | – | – | – | – | 2024 | 2029 | 2037 | 2044 | 2095 | 2119 | 2159 | – | 2249 | – | – | – | – | – | – | – | – | – | – |
| **SK 9092.1** | – | – | – | – | – | – | – | – | – | – | – | – | 3248 | 3285 | 3338 | 3338 | 3495 | 3568 | 3640 | 4046 | 4432 | 4542 | 4917 | 5094 | 5424 |
| **SK 9092.1/52** | – | – | – | – | – | – | – | 3285 | 3294 | 3301 | 3352 | 3376 | 3416 | 3453 | 3506 | 3506 | – | – | – | – | – | – | – | – | – |
| **SK 9096.1** | – | – | – | – | – | – | – | – | – | – | – | – | – | 4024 | 4077 | 4077 | 4234 | 4306 | 4379 | 4785 | 5171 | 5281 | 5656 | 5832 | 6163 |
| **SK 9096.1/62** | – | – | – | – | – | – | – | – | 4154 | 4161 | 4212 | 4236 | 4275 | 4313 | 4366 | 4366 | 4522 | 4595 | 4668 | – | – | – | – | – | – |
| **SK 9096.1/63** | – | – | – | – | – | – | 4161 | 4165 | 4174 | 4174 | – | – | – | – | – | – | – | – | – | – | – | – | – | – | – |

Above weights are approximate. Depending upon ratio, oil quantity and optional equipment, reducer weights may be different than shown.

Exact weights can be obtained after the unit is fully asembled.


Send Quote Requests to info@automatedpt.com
Call +1(800)985-6929 To Order or Order Online At Nordgearmotors.com

Send Quote Requests to info@automatedpt.com
Call +1(800)985-6929 To Order or Order Online At Nordgearmotors.com







## Approximate Weights [lb]

| Type | W | 56C | 140TC | 180TC | 210TC | 250TC | 280TC | 320TC | 360TC |
|---|---|---|---|---|---|---|---|---|---|
| **SK 92072** | 15 | 24 | 24 | – | – | – | – | – | – |
| **SK 92172** | 26 | 35 | 35 | – | – | – | – | – | – |
| **SK 92372** | 40 | 49 | 49 | 60 | – | – | – | – | – |
| **SK 92672** | 79 | 86 | 86 | 97 | 112 | – | – | – | – |
| **SK 9012.1**<br>**SK 9013.1** | 75<br>86 | 86<br>90 | 86<br>– | 101<br>– | –<br>– | –<br>– | –<br>– | –<br>– | –<br>– |
| **SK 9016.1**<br>**SK 9017.1** | 77<br>88 | 88<br>93 | 88<br>– | 104<br>– | –<br>– | –<br>– | –<br>– | –<br>– | –<br>– |
| **SK 92772** | 99 | 101 | 101 | 112 | 128 | 128 | – | – | – |
| **SK 9022.1**<br>**SK 9023.1** | 93<br>104 | 104<br>108 | 104<br>– | 119<br>– | –<br>– | –<br>– | –<br>– | –<br>– | –<br>– |
| **SK 9032.1**<br>**SK 9033.1** | 150<br>154 | 154<br>165 | 154<br>165 | 163<br>– | 183<br>– | –<br>– | –<br>– | –<br>– | –<br>– |
| **SK 9042.1**<br>**SK 9043.1** | 276<br>287 | 265<br>291 | 265<br>291 | 280<br>300 | 311<br>– | 333<br>– | –<br>– | –<br>– | –<br>– |
| **SK 9052.1**<br>**SK 9053.1** | 441<br>459 | 430<br>463 | 430<br>463 | 445<br>472 | 476<br>– | 498<br>– | 498<br>– | –<br>– | –<br>– |
| **SK 9072.1**<br>**SK 9072.1/32**<br>**SK 9072.1/42** | 794<br>803<br>862 | –<br>807<br>– | –<br>807<br>851 | 767<br>816<br>897 | 796<br>836<br>919 | 851<br>–<br>942 | 851<br>–<br>– | 882<br>–<br>– | 915<br>–<br>– |
| **SK 9082.1**<br>**SK 9082.1/42**<br>**SK 9082.1//52** | 1532<br>1435<br>1491 | –<br>1424<br>– | –<br>1424<br>– | 1338<br>1440<br>1495 | 1369<br>1471<br>1526 | 1424<br>1493<br>1548 | 1424<br>–<br>1548 | 1455<br>–<br>– | 1488<br>–<br>– |
| **SK 9086.1**<br>**SK 9086.1/52** | 2084<br>2042 | –<br>2031 | –<br>2031 | 1890<br>2046 | 1921<br>2077 | 1976<br>2099 | 1976<br>2099 | 2007<br>– | 2040<br>– |
| **SK 9092.1**<br>**SK 9092.1/52** | 3341<br>3299 | –<br>3288 | –<br>3288 | 3147<br>3303 | 3177<br>3334 | 3233<br>3356 | 3233<br>3356 | 3263<br>– | 3296<br>– |
| **SK 9096.1**<br>**SK 9096.1/62**<br>**SK 9096.1/63** | 4221<br>4298<br>4315 | –<br>4287<br>4304 | –<br>4287<br>4304 | –<br>4302<br>4319 | 4057<br>4333<br>4350 | 4113<br>4355<br>4372 | 4113<br>4355<br>4372 | 4143<br>–<br>– | 4176<br>–<br>– |

Above weights are approximate. Depending upon ratio, oil quantity and optional equipment, reducer weights may be different than shown.

Exact weights can be obtained after the unit is fully asembled.



Send Quote Requests to info@automatedpt.com
Call +1(800)985-6929 To Order or Order Online At Nordgearmotors.com

Send Quote Requests to info@automatedpt.com
Call +1(800)985-6929 To Order or Order Online At Nordgearmotors.com



# Helical-Worm Weights - Gearmotor



lb

NORD DRIVESYSTEMS

## Approximate Wieghts [lb]

| Type | 63S | 63 L | 71 S | 71 L | 80 S | 80 L | 90 S | 90 L | 100 L | 100 LA | 132 S | 132 M | 160 M | 160 L |
|---|---|---|---|---|---|---|---|---|---|---|---|---|---|---|
| **SK 02040** | 27 | 28 | 31 | 33 | 37 | 39 | 46 | – | – | – | – | – | – | – |
| **SK 02050** | 43 | 45 | 47 | 49 | 53 | 55 | 62 | 66 | – | – | – | – | – | – |
| **SK 13050** | 54 | – | 58 | – | – | – | – | – | – | – | – | – | – | – |
| **SK 12063** | 52 | 53 | 56 | 58 | 62 | 64 | 71 | 75 | 84 | – | – | – | – | – |
| **SK 13063** | 63 | – | 67 | – | – | – | – | – | – | – | – | – | – | – |
| **SK 12080** | – | 75 | 78 | 80 | 84 | 86 | 93 | 97 | 106 | 112 | – | – | – | – |
| **SK 13080** | 85 | 86 | 89 | 91 | – | – | – | – | – | – | – | – | – | – |
| **SK 32100** | – | – | – | 137 | 141 | 143 | 150 | 154 | 163 | 170 | 221 | 245 | – | – |
| **SK 33100** | 149 | 150 | 153 | 155 | 159 | 161 | – | 172 | – | – | – | – | – | – |
| **SK 42125** | – | – | – | – | – | – | 238 | 243 | 251 | 258 | 309 | 333 | 373 | 410 |
| **SK 43125** | – | – | 261 | 263 | 267 | 269 | 276 | 280 | 289 | 295 | – | – | – | – |

Above weights are approximate. Depending upon ratio, oil quantity and optional equipment, reducer weights may be different than shown.

Exact weights can be obtained after the unit is fully asembled.


Send Quote Requests to info@automatedpt.com
Call +1(800)985-6929 To Order or Order Online At Nordgearmotors.com

Send Quote Requests to info@automatedpt.com
Call +1(800)985-6929 To Order or Order Online At Nordgearmotors.com







## Approximate Weights [lb]

| Type | W | 56C | 140TC | 180TC | 210TC | 250TC | 280TC | 320TC | 360TC |
|---|---|---|---|---|---|---|---|---|---|
| **SK 02040** | 24 | 33 | – | – | – | – | – | – | – |
| **SK 02050**<br>**SK 13050** | 44<br>55 | 55<br>66 | 55<br>– | –<br>– | –<br>– | –<br>– | –<br>– | –<br>– | –<br>– |
| **SK 12063**<br>**SK 13063** | 53<br>64 | 64<br>75 | 64<br>– | 79<br>– | –<br>– | –<br>– | –<br>– | –<br>– | –<br>– |
| **SK 12080**<br>**SK 13080** | 75<br>86 | 86<br>97 | 86<br>– | 101<br>– | –<br>– | –<br>– | –<br>– | –<br>– | –<br>– |
| **SK 32100**<br>**SK 33100** | 146<br>150 | 150<br>161 | 150<br>161 | 159<br>– | 179<br>– | –<br>– | –<br>– | –<br>– | –<br>– |
| **SK 42125**<br>**SK 43125** | 256<br>271 | 245<br>276 | 245<br>276 | 260<br>284 | 291<br>315 | 313<br>– | –<br>– | –<br>– | –<br>– |

Above weights are approximate. Depending upon ratio, oil quantity and optional equipment, reducer weights may be different than shown.

Exact weights can be obtained after the unit is fully asembled.


Send Quote Requests to info@automatedpt.com
Call +1(800)985-6929 To Order or Order Online At Nordgearmotors.com

NOTES

# Notes



DRIVESYSTEMS


Send Quote Requests to info@automatedpt.com
Call +1(800)985-6929 To Order or Order Online At Nordgearmotors.com

Send Quote Requests to info@automatedpt.com
Call +1(800)985-6929 To Order or Order Online At Nordgearmotors.com

# In-line Helical Gearmotors

## Selection

- Order Form
- Unit Examples
- 0.16 hp
- 0.25 hp
- 0.33 hp
- 0.50 hp
- 0.75 hp
- 1.0 hp
- 1.5 hp
- 2.0 hp
- 3.0 hp
- 5.0 hp
- 7.5 hp
- 10 hp
- 15 hp
- 20 hp
- 25 hp
- 30 hp
- 40 hp
- 50 hp
- 60 hp
- 75 hp
- 100 hp
- 125 hp
- 150 hp
- 175 hp
- 200 hp



NORD® DRIVESYSTEMS

www.nord.com

UNICASE™

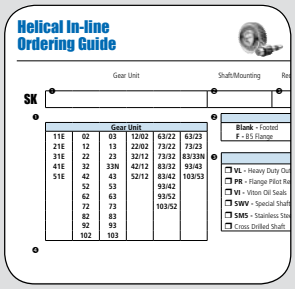


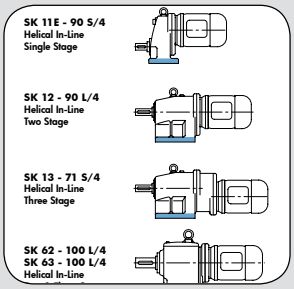


| Motor Power $P_n$ [hp] | Output Speed $n_2$ [rpm] | Output Torque $T_a$ [lb-in] | Service Factor $f_B$ | AGMA Class | |
|---|---|---|---|---|---|
| 0.16 | 1259 | 8 | 26.3 | III | 1 |
| | 1104 | 9 | 25.3 | III | 1 |
| | 939 | 11 | 24.4 | III | 1 |
| | 833 | 12 | 23.5 | III | 2 |
| | 733 | 14 | 22.6 | III | 2 |
| | 601 | 17 | 21.2 | III | 2 |
| | 535 | 19 | 18.7 | III | 3 |
| | 472 | 21 | 17.3 | III | 3 |
| | 187 | 54 | 3.7 | III | 9 |
| | 576 | 18 | 22.0 | III | 3 |
| | 503 | 20 | 21.0 | III | |

Send Quote Requests to info@automatedpt.com
Call +1(800)985-6929 To Order or Order Online At Nordgearmotors.com

# Helical In-line Ordering Guide

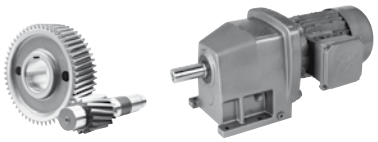

NORD DRIVESYSTEMS

GEARMOTORS

| | Gear Unit | Shaft/Mounting | Reducer Options | | Input/Motor | Motor Options |
|---|---|---|---|---|---|---|
| **SK** | ❶ | ❷ | ❸ | – | ❹ | |
| | | | | | see page 690 | see page 690 |

❶

| Gear Unit | | | | | |
|---|---|---|---|---|---|
| 11E | 02 | 03 | 12/02 | 63/22 | 63/23 |
| 21E | 12 | 13 | 22/02 | 73/22 | 73/23 |
| 31E | 22 | 23 | 32/12 | 73/32 | 83/33N |
| 41E | 32 | 33N | 42/12 | 83/32 | 93/43 |
| 51E | 42 | 43 | 52/12 | 83/42 | 103/53 |
| | 52 | 53 | | 93/42 | |
| | 62 | 63 | | 93/52 | |
| | 72 | 73 | | 103/52 | |
| | 82 | 83 | | | |
| | 92 | 93 | | | |
| | 102 | 103 | | | |

❷

| Shaft/Mounting | |
|---|---|
| **Blank -** Footed | **XZ -** Foot/B14 Flange |
| **F -** B5 Flange | **XF -** Foot/B5 Flange |

❸

| Reducer Options | |
|---|---|
| ❒ **VL -** Heavy Duty Output Bearings | ❒ **OSG -** Oil Sight Glass |
| ❒ **PR -** Flange Pilot Removal | ❒ **OA -** Oil Expansion Chamber |
| ❒ **VI -** Fluoro Rubber Seals | ❒ **OC -** Oil Cooler |
| ❒ **SWV -** Special Solid Shaft | ❒ **LL -** Long Term Storage |
| ❒ **SM5 -** Stainless Steel Output Shaft | ❒ **MDP -** Magnetic Drain Plug |
| ❒ Cross Drilled Shaft | ❒ **ADP -** Additional Drain Plug |

❹

| Input Shaft | NEMA Adapter | IEC | Integral Motors | | Integral Energy Efficent Motors | | Scoop | Motor Platform | Servo Adapter (Keyed) |
|---|---|---|---|---|---|---|---|---|---|
| W | N56C | IEC 63 | **63S/4** - 0.16hp | **160L/4** - 20hp | **80LH/4** - 1hp | **200LH/4** - 40hp | S56 | MKN056 | SEP 100 |
| | N140TC | IEC 71 | **63L/4** - 0.25hp | **180MX/4** - 25hp | **90SH/4** - 1.5hp | **225SH/4** - 50hp | S140T | MKN140 | SEP 130 |
| | N180TC | IEC 80 | **71S/4** - 0.33hp | **180LX/4** - 30hp | **90LH/4** - 2hp | **225MH/4** - 60hp | S180T | MKN180 | SEP 165 |
| | N210TC | IEC 90 | **71L/4** - 0.50hp | **200L/4** - 40hp | **100LH/4** - 3hp | **250MH/4** - 75hp | S210T | MKN210 | SEP 215 |
| | N250TC | IEC 100 | **80S/4** - 0.75hp | **225S/4** - 50hp | **112MH/4** - 5hp | **280SH/4** - 100hp | S250T | MKN250 | SEP 300 |
| | N280TC | IEC 112 | **80L/4** - 1hp | **225M/4** - 60hp | **132SH/4** - 7.5hp | **280MH/4** - 125hp | S280T | MKN280 | Servo Adapter (Clamp) |
| | N320TC | IEC 132 | **90S/4** - 1.5hp | **250M/4** - 75hp | **132MH/4** - 10hp | **315SH/4** - 150hp | S320T | MKN320 | |
| | N360TC | IEC 160 | **90L/4** - 2hp | **280S/4** - 100hp | **160MH/4** - 15hp | **315MH/4** - 175hp | S360T | MKN360 | SEK 100 |
| | N400TC | IEC 180 | **100L/4** - 3hp | **280M/4** - 125hp | **160LH/4** - 20hp | **315MAH/4** - 200hp | S400T | MKN400 | SEK 130 |
| | | IEC 200 | **100LA/4** - 5hp | **315S/4** - 150hp | **180MH/4** - 25hp | **315LH/4** - 250hp | | | SEK 165 |
| | | IEC 225 | **112M/4** - 5.4hp | **315M/4** - 175hp | **180LH/4** - 30hp | | | | SEK 215 |
| | | IEC 250 | **132S/4** - 7.5hp | **315MA/4** - 200hp | | | | | SEK 300 |
| | | IEC 280 | **132M/4** - 10hp | **315L/4** - 250hp | | | | | |
| | | IEC 315 | **160M/4** - 15hp | Other Speeds Available | | Other Speeds Available | | | |

## Product Specifications

**Ratio**

_____ :1

see pages 88 - 125

— **OR**—

**Output Speed**

_____ rpm

see pages 88 - 125

**Mounting Position**

- ❍ M1
- ❍ M2
- ❍ M3
- ❍ M4
- ❍ M5
- ❍ M6
- ❍ Special _____

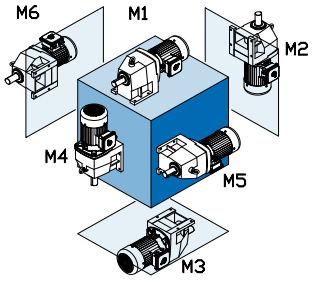


**Paint**

- ❍ Standard Stainles Steel Paint
- ❍ NSD+ (gray)
- ❍ NSD+W (white)
- ❍ NSD-X3 (gray)
- ❍ NSD-X3W (white)
- ❍ Casting Primed
- ❍ Special _____

**Lubricant**

- ❍ Standard
- ❍ Synthetic
- ❍ Food Grade
- ❍ Other _____

**B5 Flange Diameter** (If required)

_____

## Gearmotor Only Details

**Voltage & Frequency**

- ❍ 230/460V-60Hz (460V only ≥ 40 hp)
- ❍ 575V-60Hz
- ❍ 208V-60Hz
- ❍ 400V-50Hz
- ❍ 115/230V-60Hz, 1 ph.
- ❍ Other _____

**Terminal Box Pos.**

- ❍ TB1
- ❍ TB2
- ❍ TB3
- ❍ TB4

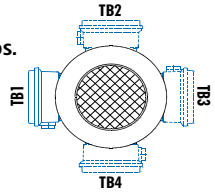


Mtg. Pos. M1 Shown

**Conduit Entry Loc.**

- ❍ CE I *
- ❍ CE II
- ❍ CE III *
- ❍ CE IV

* Brakemotor

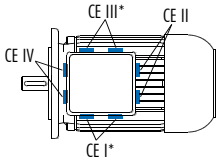


Mtg. Pos. M1 Shown


Send Quote Requests to info@automatedpt.com
Call +1(800)985-6929 To Order or Order Online At Nordgearmotors.com

DRIVESYSTEMS

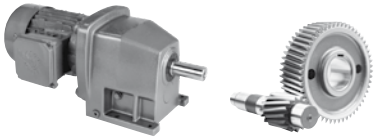

# Unit Examples



## Examples of Available Helical In-line Units with Post Mounted Design

**SK 11E - 90 S/4**
Helical In-Line
Single Stage

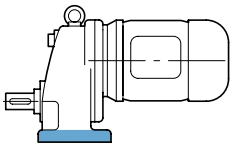

**SK 12 - 90 L/4**
Helical In-Line
Two Stage

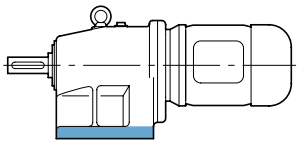

**SK 13 - 71 S/4**
Helical In-Line
Three Stage

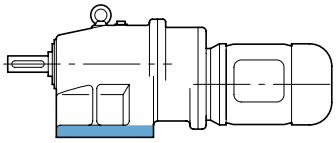

**SK 62 - 100 L/4**
**SK 63 - 100 L/4**
Helical In-Line
Two & Three Stage

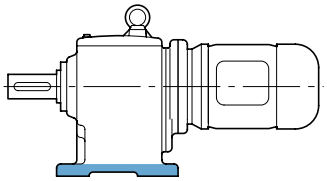

**SK 12/02 - 63 S/4**
Helical In-Line
Four Stage

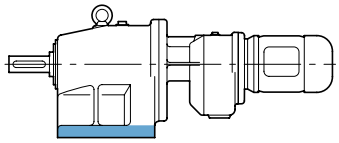

**SK 63/22 - 80 S/4**
Helical In-Line
Five Stage

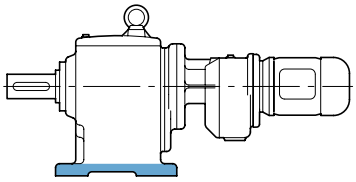

## Examples of Available Helical In-line Units with Flange Mount Design

**SK 11EF - 90 S/4**
Helical In-Line
with B5 Flange
Single Stage

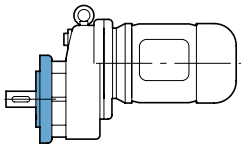

**SK 12F - 90 L/4**
Helical In-Line
with B5 Flange
Two Stage

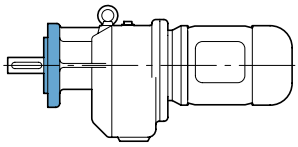

**SK 13F - 71 S/4**
Helical In-Line
with B5 Flange
Three Stage

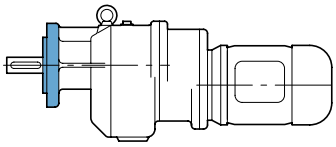

**SK 62F - 100 L/4**
**SK 63F - 100 L/4**
Helical In-Line
with B5 Flange
Two & Three Stage

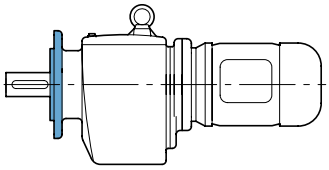

**SK 12/02F - 63 S/4**
Helical In-Line
with B5 Flange
Four Stage

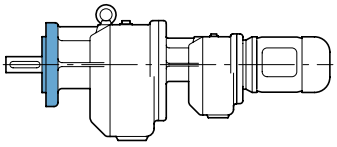

**SK 63/22F - 80 S/4**
Helical In-Line
With B5 Flange
Five Stage

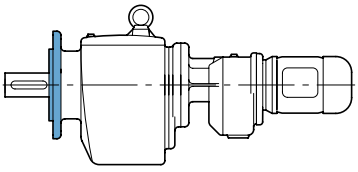

## Housing Options for Foot-Flange Mounting

**SK 12XZ - 80 L/4**
Helical In-Line with
Foot Mount & B14 Flange
Two Stage

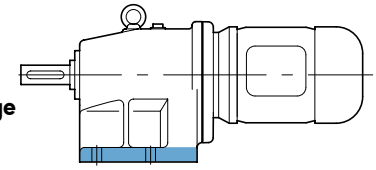

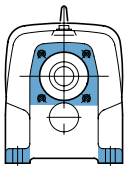

**SK 12XF - 80 L/4**
Helical In-Line with
Foot Mount & B5 Flange
Two Stage

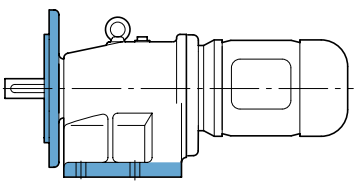

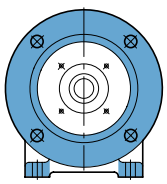


Send Quote Requests to info@automatedpt.com
Call +1(800)985-6929 To Order or Order Online At Nordgearmotors.com

# 0.16 hp Gearmotors

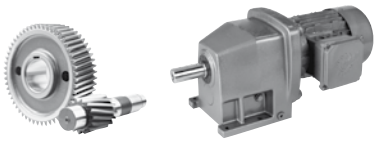

DRIVESYSTEMS

GEARMOTORS

| Motor Power $P_n$ [hp] | Output Speed $n_2$ [rpm] | Output Torque $T_a$ [lb-in] | Service Factor $f_B$ | AGMA Class | Gear Ratio $i_{tot}$ | Standard Bearings $F_{RN}$ OHL [lb] | Standard Bearings $F_{AN}$ Thrust [lb] | Heavy Duty Bearings (VL) $F_{RVL}$ OHL [lb] | Heavy Duty Bearings (VL) $F_{AVL}$ Thrust [lb] | Model Type | Weight [lb] | Dim. Page |
|---|---|---|---|---|---|---|---|---|---|---|---|---|
| 0.16 | 1259 | 8 | 26.3 | III | 1.35 | | 549 | | | SK 11E - 63S/4 | 21 | 152 |
| | 1104 | 9 | 25.3 | III | 1.54 | | 581 | | | | | |
| | 939 | 11 | 24.4 | III | 1.81 | | 623 | | | | | |
| | 833 | 12 | 23.5 | III | 2.04 | | 657 | | | | | |
| | 733 | 14 | 22.6 | III | 2.32 | | 693 | | | | | |
| | 601 | 17 | 21.2 | III | 2.83 | | 756 | | | | | |
| | 535 | 19 | 18.7 | III | 3.18 | | 797 | | | | | |
| | 472 | 21 | 17.3 | III | 3.60 | | 837 | | | | | |
| | 187 | 54 | 3.7 | III | 9.11 | | 956 | | | | | |
| | 576 | 18 | 22.0 | III | 2.95 | 342 | 594 | 488 | 698 | SK 02 - 63S/4 | 26 | 167 |
| | 503 | 20 | 21.0 | III | 3.38 | 358 | 628 | 511 | 727 | | | |
| | 437 | 23 | 20.0 | III | 3.89 | 374 | 666 | 536 | 763 | | | |
| | 403 | 25 | 18.3 | III | 4.22 | 385 | 693 | 551 | 783 | | | |
| | 353 | 29 | 17.5 | III | 4.82 | 401 | 729 | 574 | 817 | | | |
| | 305 | 33 | 15.2 | III | 5.57 | 421 | 736 | 603 | 857 | | | |
| | 279 | 36 | 13.9 | III | 6.10 | 434 | 736 | 623 | 884 | | | |
| | 247 | 41 | 13.1 | III | 6.89 | 452 | 736 | 644 | 918 | | | |
| | 218 | 47 | 12.0 | III | 7.80 | 470 | 736 | 671 | 956 | | | |
| | 208 | 49 | 11.4 | III | 8.19 | 477 | 736 | 682 | 970 | | | |
| | 183 | 55 | 10.4 | III | 9.28 | 497 | 736 | 711 | 1010 | | | |
| | 171 | 59 | 9.5 | III | 9.95 | 509 | 736 | 727 | 1035 | | | |
| | 151 | 67 | 8.8 | III | 11.27 | 529 | 736 | 754 | 1076 | | | |
| | 133 | 76 | 8.1 | III | 12.82 | 542 | 736 | 754 | 1121 | | | |
| | 107 | 95 | 6.7 | III | 15.95 | 542 | 736 | 754 | 1202 | | | |
| | 83 | 123 | 5.3 | III | 20.59 | 542 | 736 | 754 | 1301 | | | |
| | 73 | 138 | 5.0 | III | 23.13 | 542 | 736 | 754 | 1341 | | | |
| | 62 | 164 | 4.7 | III | 27.52 | 540 | 736 | 752 | 1406 | | | |
| | 51 | 199 | 4.3 | III | 33.42 | 540 | 736 | 752 | 1406 | | | |
| | 41 | 248 | 3.5 | III | 41.58 | 538 | 736 | 749 | 1406 | | | |
| | 32 | 320 | 2.5 | III | 53.68 | 533 | 736 | 747 | 1406 | | | |
| | 28 | 366 | 2.2 | III | 61.27 | 531 | 736 | 745 | 1406 | | | |
| | 23 | 436 | 1.8 | II | 73.06 | 524 | 736 | 740 | 1406 | | | |
| | 26 | 391 | 2.5 | III | 65.50 | 529 | 736 | 745 | 1406 | SK 03 - 63S/4 | 34 | 170 |
| | 21 | 486 | 1.9 | II | 81.50 | 520 | 736 | 738 | 1406 | | | |
| | 16 | 625 | 1.3 | I | 104.77 | 504 | 736 | 727 | 1406 | | | |
| | 14 | 743 | 1.3 | I | 124.62 | 486 | 736 | 716 | 1406 | | | |
| | 11 | 903 | 1.1 | I | 151.33 | 457 | 736 | 695 | 1406 | | | |
| | 10 | 1019 | 0.9 | * | 170.75 | 432 | 736 | 677 | 1406 | | | |
| | 8 | 1173 | 0.8 | * | 212.47 | 387 | 736 | 650 | 1406 | | | |
| | 6.2 | 985 | 0.8 | * | 274.28 | 439 | 736 | 684 | 1406 | | | |
| | 28 | 366 | 3.7 | III | 61.35 | 824 | 900 | 1143 | 2131 | SK 12 - 63S/4 | 30 | 173 |
| | 23 | 433 | 2.8 | III | 72.63 | 821 | 900 | 1141 | 2228 | | | |
| | 25 | 408 | 4.3 | III | 68.40 | 824 | 900 | 1141 | 2189 | SK 13 - 63S/4 | 41 | 176 |
| | 20 | 510 | 3.1 | III | 85.47 | 819 | 900 | 1139 | 2327 | | | |
| | 16 | 649 | 2.4 | III | 108.72 | 812 | 900 | 1134 | 2477 | | | |
| | 13 | 790 | 1.7 | II | 132.45 | 803 | 900 | 1127 | 2583 | | | |
| | 11 | 951 | 1.6 | II | 159.36 | 790 | 900 | 1118 | 2707 | | | |
| | 8.7 | 1168 | 1.5 | II | 195.78 | 770 | 900 | 1105 | 2849 | | | |
| | 6.9 | 1459 | 1.1 | I | 244.62 | 734 | 900 | 1080 | 3008 | | | |
| | 6.2 | 1641 | 0.9 | * | 275.12 | 707 | 900 | 1062 | 3087 | | | |
| | 5.4 | 1847 | 0.8 | * | 313.48 | 671 | 900 | 1037 | 3182 | | | |
| | 4.6 | 1947 | 0.8 | * | 369.34 | 650 | 900 | 1024 | 3263 | | | |

(AGMA Class I = $f_B$ 1.0 - 1.39 II = $f_B$ 1.4 - 1.99 III = $f_B$ ≥ 2.0 * = $f_B$ < 1.0)


Send Quote Requests to info@automatedpt.com
Call +1(800)985-6929 To Order or Order Online At Nordgearmotors.com

DRIVESYSTEMS

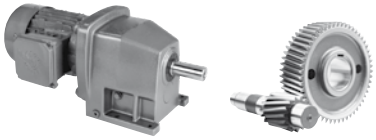

# 0.16 hp Gearmotors



| Motor Power $P_n$ [hp] | Output Speed $n_2$ [rpm] | Output Torque $T_a$ [lb-in] | Service Factor $f_B$ | AGMA Class | Gear Ratio $i_{tot}$ | Standard Bearings $F_{RN}$ OHL [lb] | Standard Bearings $F_{AN}$ Thrust [lb] | Heavy Duty Bearings (VL) $F_{RVL}$ OHL [lb] | Heavy Duty Bearings (VL) $F_{AVL}$ Thrust [lb] | Model Type | Weight [lb] | Dim. Page |
|---|---|---|---|---|---|---|---|---|---|---|---|---|
| **0.16** | 3.9 | 1717 | 0.9 | * | 431.75 | 693 | 900 | 1053 | 3263 | **SK 12/02 - 63S/4** | 48 | 233 |
| | 3.2 | 1991 | 0.8 | * | 537.49 | 641 | 900 | 1019 | 3263 | | | |
| | 2.7 | 1991 | 0.8 | * | 619.86 | 641 | 900 | 1019 | 3263 | | | |
| | 1.9 | 1991 | 0.8 | * | 886.11 | 641 | 900 | 1019 | 3263 | | | |
| | 1.6 | 1991 | 0.8 | * | 1054.29 | 641 | 900 | 1019 | 3263 | | | |
| | 1.3 | 1991 | 0.8 | * | 1280.32 | 641 | 900 | 1019 | 3263 | | | |
| | 1.1 | 1991 | 0.8 | * | 1592.93 | 641 | 900 | 1019 | 3263 | | | |
| | 11 | 903 | 2.9 | III | 151.44 | 1211 | 1260 | 1676 | 3224 | **SK 23 - 63S/4** | 67 | 182 |
| | 9.5 | 1071 | 2.6 | III | 179.50 | 1202 | 1260 | 1670 | 3377 | | | |
| | 7.8 | 1299 | 2.3 | III | 217.73 | 1190 | 1260 | 1663 | 3551 | | | |
| | 6.5 | 1565 | 1.9 | II | 262.24 | 1175 | 1260 | 1649 | 3731 | | | |
| | 5.3 | 1931 | 1.6 | II | 323.70 | 1143 | 1260 | 1629 | 3926 | | | |
| | 4.1 | 2493 | 1.2 | I | 417.95 | 1085 | 1260 | 1589 | 4154 | | | |
| | 3.3 | 3031 | 0.8 | * | 516.65 | 1010 | 1260 | 1537 | 4365 | | | |
| | 3.1 | 2201 | 1.4 | II | 553.31 | 1118 | 1260 | 1611 | 4500 | **SK 22/02 - 63S/4** | 75 | 233 |
| | 2.5 | 2716 | 1.1 | I | 682.98 | 1055 | 1260 | 1568 | 4500 | | | |
| | 1.9 | 3507 | 0.9 | * | 881.66 | 925 | 1260 | 1483 | 4500 | | | |
| | 1.5 | 3761 | 0.8 | * | 1159.34 | 871 | 1260 | 1449 | 4500 | | | |
| | 1.2 | 3761 | 0.8 | * | 1442.41 | 871 | 1260 | 1449 | 4500 | | | |
| | 6.9 | 1481 | 4.0 | III | 248.17 | 1535 | 2025 | 2124 | 4966 | **SK 33N - 63S/4** | 94 | 188 |
| | 5 | 2023 | 2.8 | III | 339.15 | 1523 | 2025 | 2115 | 5380 | | | |
| | 4 | 2514 | 2.4 | III | 421.32 | 1510 | 2025 | 2104 | 5625 | | | |
| | 3.2 | 3127 | 1.9 | II | 524.08 | 1487 | 2025 | 2088 | 5625 | | | |
| | 2.9 | 3493 | 1.6 | II | 585.41 | 1472 | 2025 | 2077 | 5625 | | | |
| | 2.6 | 3954 | 1.3 | I | 662.81 | 1449 | 2025 | 2061 | 5625 | | | |
| | 2.3 | 4417 | 1.1 | I | 740.37 | 1422 | 2025 | 2043 | 5625 | | | |
| | 2.4 | 2782 | 2.0 | III | 699.55 | 1501 | 2025 | 2099 | 5625 | **SK 32/12 - 63S/4** | 104 | 233 |
| | 2 | 3456 | 1.6 | II | 869.04 | 1474 | 2025 | 2079 | 5625 | | | |
| | 1.6 | 4296 | 1.3 | I | 1080.05 | 1431 | 2025 | 2050 | 5625 | | | |
| | 1.3 | 5193 | 1.1 | I | 1305.66 | 1373 | 2025 | 2009 | 5625 | | | |
| | 6.1 | 1101 | 9.6 | III | 276.92 | 1888 | 2700 | 2601 | 4707 | **SK 42/12 - 63S/4** | 142 | 233 |
| | 4.9 | 1378 | 7.7 | III | 346.53 | 1886 | 2700 | 2599 | 5011 | | | |
| | 3.9 | 1724 | 6.2 | III | 433.49 | 1881 | 2700 | 2597 | 5326 | | | |
| | 3.1 | 2190 | 4.8 | III | 550.73 | 1872 | 2700 | 2590 | 5679 | | | |
| | 2.3 | 2984 | 3.6 | III | 750.33 | 1856 | 2700 | 2579 | 6154 | | | |
| | 1.5 | 4433 | 2.4 | III | 1114.65 | 1809 | 2700 | 2545 | 6750 | | | |
| | 1.2 | 5542 | 1.9 | II | 1393.38 | 1760 | 2700 | 2509 | 6750 | | | |
| | 1.1 | 6211 | 1.7 | II | 1561.55 | 1724 | 2700 | 2484 | 6750 | | | |
| | 1.9 | 3654 | 4.4 | III | 918.83 | 3184 | 5344 | 4455 | 9000 | **SK 52/12 - 63S/4** | 206 | 233 |
| | 1.2 | 5669 | 2.9 | III | 1425.44 | 3148 | 5344 | 4428 | 9000 | | | |

(AGMA Class I = $f_B$ 1.0 - 1.39 II = $f_B$ 1.4 - 1.99 III = $f_B$ ≥ 2.0 * = $f_B$ < 1.0)


Send Quote Requests to info@automatedpt.com
Call +1(800)985-6929 To Order or Order Online At Nordgearmotors.com

# 0.25 hp Gearmotors

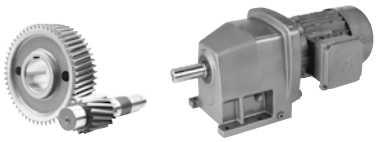

DRIVESYSTEMS

GEARMOTORS

| Motor Power $P_n$ [hp] | Output Speed $n_2$ [rpm] | Output Torque $T_2$ [lb-in] | Service Factor $f_B$ | AGMA Class | Gear Ratio $i_{tot}$ | Standard Bearings $F_{RN}$ OHL [lb] | Standard Bearings $F_{AN}$ Thrust [lb] | Heavy Duty Bearings (VL) $F_{RVL}$ OHL [lb] | Heavy Duty Bearings (VL) $F_{AVL}$ Thrust [lb] | Model Type | Weight [lb] | Dim. Page |
|---|---|---|---|---|---|---|---|---|---|---|---|---|
| 0.25 | 1244 | 13 | 16.6 | III | 1.35 | | 551 | | | SK 11E - 63L/4 | 22 | 152 |
| | 1091 | 15 | 15.8 | III | 1.54 | | 585 | | | | | |
| | 928 | 17 | 15.2 | III | 1.81 | | 626 | | | | | |
| | 824 | 19 | 14.7 | III | 2.04 | | 659 | | | | | |
| | 724 | 22 | 14.1 | III | 2.32 | | 698 | | | | | |
| | 594 | 27 | 13.2 | III | 2.83 | | 758 | | | | | |
| | 528 | 30 | 11.6 | III | 3.18 | | 799 | | | | | |
| | 467 | 34 | 10.8 | III | 3.60 | | 844 | | | | | |
| | 184 | 87 | 2.3 | III | 9.11 | | 956 | | | | | |
| | 569 | 28 | 13.7 | III | 2.95 | 342 | 590 | 488 | 695 | SK 02 - 63L/4 | 27 | 167 |
| | 497 | 32 | 13.1 | III | 3.38 | 358 | 626 | 511 | 727 | | | |
| | 432 | 37 | 12.5 | III | 3.89 | 374 | 662 | 533 | 758 | | | |
| | 398 | 40 | 11.4 | III | 4.22 | 385 | 686 | 549 | 781 | | | |
| | 349 | 46 | 10.9 | III | 4.82 | 401 | 722 | 572 | 812 | | | |
| | 302 | 53 | 9.5 | III | 5.57 | 419 | 736 | 599 | 851 | | | |
| | 275 | 58 | 8.7 | III | 6.10 | 432 | 736 | 619 | 878 | | | |
| | 244 | 66 | 8.2 | III | 6.89 | 450 | 736 | 641 | 911 | | | |
| | 215 | 75 | 7.5 | III | 7.80 | 468 | 736 | 668 | 947 | | | |
| | 205 | 78 | 7.1 | III | 8.19 | 477 | 736 | 677 | 963 | | | |
| | 181 | 89 | 6.5 | III | 9.28 | 495 | 736 | 704 | 999 | | | |
| | 169 | 95 | 6.0 | III | 9.95 | 506 | 736 | 720 | 1026 | | | |
| | 149 | 108 | 5.5 | III | 11.27 | 527 | 736 | 749 | 1064 | | | |
| | 131 | 123 | 5.1 | III | 12.82 | 542 | 736 | 754 | 1107 | | | |
| | 105 | 152 | 4.2 | III | 15.95 | 542 | 736 | 754 | 1184 | | | |
| | 82 | 197 | 3.3 | III | 20.59 | 540 | 736 | 752 | 1283 | | | |
| | 73 | 221 | 3.1 | III | 23.13 | 538 | 736 | 752 | 1314 | | | |
| | 61 | 263 | 2.9 | III | 27.52 | 538 | 736 | 749 | 1384 | | | |
| | 50 | 319 | 2.7 | III | 33.42 | 533 | 736 | 747 | 1406 | | | |
| | 40 | 397 | 2.2 | III | 41.58 | 529 | 736 | 743 | 1406 | | | |
| | 31 | 513 | 1.5 | II | 53.68 | 518 | 736 | 736 | 1406 | | | |
| | 27 | 586 | 1.3 | I | 61.27 | 509 | 736 | 729 | 1406 | | | |
| | 23 | 698 | 1.1 | I | 73.06 | 495 | 736 | 720 | 1406 | | | |
| | 26 | 626 | 1.6 | II | 65.50 | 504 | 736 | 727 | 1406 | SK 03 - 63L/4 | 36 | 170 |
| | 21 | 779 | 1.2 | I | 81.50 | 482 | 736 | 711 | 1406 | | | |
| | 16 | 1001 | 0.8 | * | 104.77 | 434 | 736 | 680 | 1406 | | | |
| | 13 | 1191 | 0.8 | * | 124.62 | 383 | 736 | 648 | 1406 | | | |
| | 39 | 412 | 3.5 | III | 43.09 | 824 | 900 | 1141 | 1899 | SK 12 - 63L/4 | 31 | 173 |
| | 31 | 515 | 3.0 | III | 53.84 | 819 | 900 | 1139 | 2018 | | | |
| | 27 | 586 | 2.3 | III | 61.35 | 815 | 900 | 1136 | 2084 | | | |
| | 23 | 694 | 1.8 | II | 72.63 | 810 | 900 | 1132 | 2176 | | | |
| | 25 | 654 | 2.7 | III | 68.40 | 812 | 900 | 1134 | 2140 | SK 13 - 63L/4 | 42 | 176 |
| | 20 | 817 | 1.9 | II | 85.47 | 801 | 900 | 1127 | 2261 | | | |
| | 15 | 1039 | 1.5 | II | 108.72 | 783 | 900 | 1114 | 2396 | | | |
| | 13 | 1266 | 1.0 | I | 132.45 | 758 | 900 | 1096 | 2462 | | | |
| | 11 | 1523 | 1.0 | I | 159.36 | 725 | 900 | 1073 | 2570 | | | |
| | 8.6 | 1871 | 0.9 | * | 195.78 | 666 | 900 | 1035 | 2684 | | | |
| | 10 | 1251 | 1.3 | I | 165.77 | 761 | 900 | 1098 | 2689 | SK 12/02 - 63L/4 | 49 | 233 |
| | 7.9 | 1610 | 1.0 | I | 213.39 | 711 | 900 | 1064 | 2835 | | | |
| | 6.4 | 1992 | 0.8 | * | 263.96 | 641 | 900 | 1017 | 2950 | | | |

(AGMA Class I = $f_B$ 1.0 - 1.39 II = $f_B$ 1.4 - 1.99 III = $f_B$ ≥ 2.0 * = $f_B$ < 1.0)


Send Quote Requests to info@automatedpt.com
Call +1(800)985-6929 To Order or Order Online At Nordgearmotors.com

NORD DRIVESYSTEMS

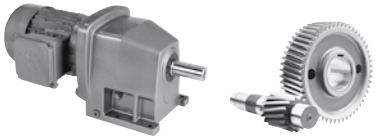

# 0.25 hp Gearmotors



| Motor Power $P_n$ [hp] | Output Speed $n_2$ [rpm] | Output Torque $T_a$ [lb-in] | Service Factor $f_B$ | AGMA Class | Gear Ratio $i_{tot}$ | Standard Bearings $F_{RN}$ OHL [lb] | Standard Bearings $F_{AN}$ Thrust [lb] | Heavy Duty Bearings (VL) $F_{RVL}$ OHL [lb] | Heavy Duty Bearings (VL) $F_{AVL}$ Thrust [lb] | Model Type | Weight [lb] | Dim. Page |
|---|---|---|---|---|---|---|---|---|---|---|---|---|
| 0.25 | 26 | 619 | 4.9 | III | 64.80 | 1220 | 1260 | 1683 | 2538 | SK 23 - 63L/4 | 69 | 182 |
| | 22 | 746 | 4.0 | III | 78.05 | 1215 | 1260 | 1681 | 2669 | | | |
| | 19 | 845 | 3.6 | III | 88.45 | 1213 | 1260 | 1676 | 2756 | | | |
| | 17 | 962 | 3.1 | III | 100.60 | 1208 | 1260 | 1674 | 2844 | | | |
| | 14 | 1187 | 2.5 | III | 124.17 | 1197 | 1260 | 1667 | 2999 | | | |
| | 11 | 1448 | 1.8 | II | 151.44 | 1181 | 1260 | 1656 | 3116 | | | |
| | 9.4 | 1716 | 1.6 | II | 179.50 | 1163 | 1260 | 1643 | 3256 | | | |
| | 7.7 | 2081 | 1.4 | II | 217.73 | 1130 | 1260 | 1620 | 3411 | | | |
| | 6.4 | 2507 | 1.2 | I | 262.24 | 1085 | 1260 | 1586 | 3555 | | | |
| | 5.2 | 3094 | 1.0 | I | 323.70 | 999 | 1260 | 1530 | 3706 | | | |
| | 4 | 3995 | 0.8 | * | 417.95 | 815 | 1260 | 1415 | 3877 | | | |
| | 4.9 | 2605 | 1.2 | I | 345.17 | 1071 | 1260 | 1580 | 3890 | SK 22/02 - 63L/4 | 77 | 233 |
| | 3.8 | 3356 | 0.9 | * | 444.73 | 954 | 1260 | 1501 | 4088 | | | |
| | 13 | 1281 | 4.5 | III | 134.02 | 1539 | 2025 | 2126 | 4129 | SK 33N - 63L/4 | 95 | 188 |
| | 10 | 1591 | 3.7 | III | 166.49 | 1532 | 2025 | 2122 | 4381 | | | |
| | 8.1 | 1980 | 3.0 | III | 207.10 | 1523 | 2025 | 2115 | 4635 | | | |
| | 6.8 | 2372 | 2.5 | III | 248.17 | 1514 | 2025 | 2108 | 4847 | | | |
| | 5 | 3242 | 1.8 | II | 339.15 | 1483 | 2025 | 2086 | 5202 | | | |
| | 4 | 4027 | 1.5 | II | 421.32 | 1445 | 2025 | 2059 | 5492 | | | |
| | 3.2 | 5009 | 1.2 | I | 524.08 | 1384 | 2025 | 2018 | 5625 | | | |
| | 2.9 | 5596 | 1.0 | I | 585.41 | 1341 | 2025 | 1987 | 5625 | | | |
| | 2.5 | 6335 | 0.8 | * | 662.81 | 1276 | 2025 | 1944 | 5625 | | | |
| | 4.6 | 2740 | 2.0 | III | 363.06 | 1501 | 2025 | 2099 | 5423 | SK 32/12 - 63L/4 | 105 | 233 |
| | 3.8 | 3368 | 1.6 | II | 446.31 | 1476 | 2025 | 2081 | 5625 | | | |
| | 3 | 4186 | 1.3 | I | 554.68 | 1436 | 2025 | 2052 | 5625 | | | |
| | 2.4 | 5279 | 1.0 | I | 699.55 | 1366 | 2025 | 2005 | 5625 | | | |
| | 1.9 | 6558 | 0.8 | * | 869.04 | 1256 | 2025 | 1931 | 5625 | | | |
| | 7.3 | 1736 | 6.1 | III | 230.05 | 1881 | 2700 | 2597 | 4374 | SK 42/12 - 63L/4 | 144 | 233 |
| | 6.1 | 2090 | 5.1 | III | 276.92 | 1874 | 2700 | 2592 | 4604 | | | |
| | 4.8 | 2615 | 4.1 | III | 346.53 | 1865 | 2700 | 2583 | 4860 | | | |
| | 3.9 | 3271 | 3.2 | III | 433.49 | 1847 | 2700 | 2572 | 5141 | | | |
| | 3.1 | 4156 | 2.6 | III | 550.73 | 1820 | 2700 | 2552 | 5438 | | | |
| | 2.2 | 5662 | 1.9 | II | 750.33 | 1753 | 2700 | 2504 | 5816 | | | |
| | 1.5 | 8411 | 1.3 | I | 1114.65 | 1568 | 2700 | 2378 | 6282 | | | |
| | 1.2 | 10515 | 1.0 | I | 1393.38 | 1350 | 2700 | 2241 | 6518 | | | |
| | 1.1 | 11784 | 0.9 | * | 1561.55 | 1172 | 2700 | 2138 | 6593 | | | |
| | 2.4 | 5202 | 3.1 | III | 689.41 | 3157 | 5344 | 4435 | 9000 | SK 52/12 - 63L/4 | 208 | 233 |
| | 1.8 | 6934 | 2.3 | III | 918.83 | 3116 | 5344 | 4408 | 9000 | | | |
| | 1.6 | 8029 | 3.5 | III | 1064.04 | 4532 | 10125 | 6338 | 10125 | SK 63/23 - 63L/4 | 353 | 235 |
| | 1.2 | 10631 | 2.7 | III | 1408.77 | 4478 | 10125 | 6300 | 10125 | | | |
| | 1 | 12652 | 2.2 | III | 1676.63 | 4426 | 10125 | 6262 | 10125 | | | |

(AGMA Class I = $f_B$ 1.0 - 1.39 II = $f_B$ 1.4 - 1.99 III = $f_B$ ≥ 2.0 * = $f_B$ < 1.0)


Send Quote Requests to info@automatedpt.com
Call +1(800)985-6929 To Order or Order Online At Nordgearmotors.com

# 0.33 hp Gearmotors

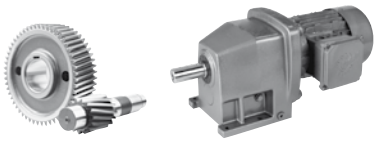

DRIVESYSTEMS

GEARMOTORS

| Motor Power $P_n$ [hp] | Output Speed $n_2$ [rpm] | Output Torque $T_2$ [lb-in] | Service Factor $f_B$ | AGMA Class | Gear Ratio $i_{tot}$ | Standard Bearings $F_{RN}$ OHL [lb] | Standard Bearings $F_{AN}$ Thrust [lb] | Heavy Duty Bearings (VL) $F_{RVL}$ OHL [lb] | Heavy Duty Bearings (VL) $F_{AVL}$ Thrust [lb] | Model Type | Weight [lb] | Dim. Page |
|---|---|---|---|---|---|---|---|---|---|---|---|---|
| 0.33 | 1267 | 16 | 12.8 | III | 1.35 | | 549 | | | SK 11E - 71S/4 | 25 | 152 |
| | 1110 | 19 | 12.2 | III | 1.54 | | 581 | | | | | |
| | 945 | 22 | 11.8 | III | 1.81 | | 623 | | | | | |
| | 838 | 25 | 11.4 | III | 2.04 | | 657 | | | | | |
| | 737 | 29 | 10.9 | III | 2.32 | | 691 | | | | | |
| | 604 | 35 | 10.2 | III | 2.83 | | 754 | | | | | |
| | 538 | 39 | 9.0 | III | 3.18 | | 792 | | | | | |
| | 475 | 44 | 8.4 | III | 3.60 | | 837 | | | | | |
| | 188 | 113 | 1.8 | II | 9.11 | | 956 | | | | | |
| | 580 | 36 | 10.6 | III | 2.95 | 338 | 583 | 484 | 686 | SK 02 - 71S/4 | 30 | 167 |
| | 506 | 42 | 10.1 | III | 3.38 | 353 | 614 | 504 | 718 | | | |
| | 440 | 48 | 9.7 | III | 3.89 | 369 | 650 | 527 | 749 | | | |
| | 405 | 52 | 8.8 | III | 4.22 | 380 | 675 | 542 | 772 | | | |
| | 355 | 60 | 8.5 | III | 4.82 | 396 | 711 | 565 | 801 | | | |
| | 307 | 69 | 7.3 | III | 5.57 | 414 | 736 | 592 | 842 | | | |
| | 280 | 75 | 6.7 | III | 6.10 | 428 | 736 | 610 | 866 | | | |
| | 248 | 85 | 6.3 | III | 6.89 | 443 | 736 | 632 | 900 | | | |
| | 219 | 96 | 5.8 | III | 7.80 | 461 | 736 | 657 | 932 | | | |
| | 209 | 101 | 5.5 | III | 8.19 | 468 | 736 | 668 | 947 | | | |
| | 184 | 115 | 5.0 | III | 9.28 | 486 | 736 | 695 | 986 | | | |
| | 172 | 123 | 4.6 | III | 9.95 | 497 | 736 | 711 | 1006 | | | |
| | 152 | 139 | 4.3 | III | 11.27 | 518 | 736 | 738 | 1049 | | | |
| | 133 | 158 | 3.9 | III | 12.82 | 538 | 736 | 754 | 1085 | | | |
| | 107 | 197 | 3.2 | III | 15.95 | 540 | 736 | 752 | 1159 | | | |
| | 83 | 254 | 2.6 | III | 20.59 | 538 | 736 | 749 | 1249 | | | |
| | 74 | 286 | 2.4 | III | 23.13 | 536 | 736 | 749 | 1278 | | | |
| | 62 | 340 | 2.3 | III | 27.52 | 533 | 736 | 747 | 1343 | | | |
| | 51 | 413 | 2.1 | III | 33.42 | 527 | 736 | 743 | 1406 | | | |
| | 41 | 514 | 1.7 | II | 41.58 | 518 | 736 | 736 | 1406 | | | |
| | 32 | 663 | 1.2 | I | 53.68 | 500 | 736 | 722 | 1406 | | | |
| | 28 | 757 | 1.0 | I | 61.27 | 484 | 736 | 713 | 1406 | | | |
| | 23 | 903 | 0.9 | * | 73.06 | 457 | 736 | 695 | 1406 | | | |
| | 26 | 809 | 1.2 | I | 65.50 | 475 | 736 | 707 | 1406 | SK 03 - 71S/4 | 38 | 170 |
| | 21 | 1007 | 0.9 | * | 81.50 | 434 | 736 | 680 | 1406 | | | |
| | 49 | 433 | 3.0 | III | 35.07 | 815 | 900 | 1141 | 1760 | SK 12 - 71S/4 | 34 | 173 |
| | 40 | 532 | 2.7 | III | 43.09 | 819 | 900 | 1139 | 1859 | | | |
| | 32 | 665 | 2.3 | III | 53.84 | 810 | 900 | 1134 | 1973 | | | |
| | 28 | 758 | 1.8 | II | 61.35 | 806 | 900 | 1130 | 2034 | | | |
| | 24 | 897 | 1.4 | II | 72.63 | 794 | 900 | 1123 | 2113 | | | |
| | 25 | 845 | 2.1 | III | 68.40 | 799 | 900 | 1125 | 2077 | SK 13 - 71S/4 | 45 | 176 |
| | 20 | 1056 | 1.5 | II | 85.47 | 781 | 900 | 1112 | 2189 | | | |
| | 16 | 1343 | 1.2 | I | 108.72 | 749 | 900 | 1091 | 2304 | | | |
| | 13 | 1637 | 0.8 | * | 132.45 | 707 | 900 | 1062 | 2347 | | | |
| | 11 | 1969 | 0.8 | * | 159.36 | 646 | 900 | 1022 | 2441 | | | |
| | 18 | 964 | 1.5 | II | 92.89 | 790 | 900 | 1118 | 2264 | SK 12/02 - 71S/4 | 52 | 233 |
| | 16 | 1138 | 1.3 | I | 109.66 | 774 | 900 | 1107 | 2349 | | | |
| | 13 | 1383 | 1.0 | I | 133.23 | 745 | 900 | 1087 | 2446 | | | |
| | 10 | 1721 | 0.9 | * | 165.77 | 693 | 900 | 1053 | 2554 | | | |

(AGMA Class I = $f_B$ 1.0 - 1.39 II = $f_B$ 1.4 - 1.99 III = $f_B$ ≥ 2.0 * = $f_B$ < 1.0)


Send Quote Requests to info@automatedpt.com
Call +1(800)985-6929 To Order or Order Online At Nordgearmotors.com

NORD DRIVESYSTEMS

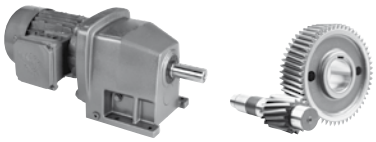

# 0.33 hp Gearmotors



| Motor Power $P_n$ [hp] | Output Speed $n_2$ [rpm] | Output Torque $T_a$ [lb-in] | Service Factor $f_B$ | AGMA Class | Gear Ratio $i_{tot}$ | Standard Bearings $F_{RN}$ OHL [lb] | Standard Bearings $F_{AN}$ Thrust [lb] | Heavy Duty Bearings (VL) $F_{RVL}$ OHL [lb] | Heavy Duty Bearings (VL) $F_{AVL}$ Thrust [lb] | Model Type | Weight [lb] | Dim. Page |
|---|---|---|---|---|---|---|---|---|---|---|---|---|
| **0.33** | 37 | 567 | 4.6 | III | 45.90 | 1220 | 1260 | 1683 | 2270 | **SK 22 - 71S/4** | 54 | 179 |
| | 31 | 683 | 4.1 | III | 55.28 | 1217 | 1260 | 1681 | 2390 | | | |
| | 24 | 863 | 2.7 | III | 69.81 | 1211 | 1260 | 1676 | 2538 | | | |
| | 20 | 1066 | 2.1 | III | 86.30 | 1202 | 1260 | 1670 | 2682 | | | |
| | 26 | 801 | 3.8 | III | 64.80 | 1213 | 1260 | 1679 | 2486 | **SK 23 - 71S/4** | 71 | 182 |
| | 22 | 964 | 3.1 | III | 78.05 | 1208 | 1260 | 1674 | 2608 | | | |
| | 19 | 1093 | 2.8 | III | 88.45 | 1202 | 1260 | 1670 | 2689 | | | |
| | 17 | 1243 | 2.4 | III | 100.60 | 1193 | 1260 | 1665 | 2781 | | | |
| | 14 | 1534 | 2.0 | III | 124.17 | 1175 | 1260 | 1652 | 2914 | | | |
| | 11 | 1871 | 1.4 | II | 151.44 | 1150 | 1260 | 1634 | 3015 | | | |
| | 9.5 | 2218 | 1.2 | I | 179.50 | 1116 | 1260 | 1609 | 3132 | | | |
| | 7.9 | 2690 | 1.1 | I | 217.73 | 1060 | 1260 | 1571 | 3272 | | | |
| | 6.5 | 3240 | 0.9 | * | 262.24 | 974 | 1260 | 1514 | 3393 | | | |
| | 5.3 | 4000 | 0.8 | * | 323.70 | 812 | 1260 | 1415 | 3510 | | | |
| | 19 | 1090 | 4.4 | III | 88.18 | 1541 | 2025 | 2126 | 3620 | **SK 33N - 71S/4** | 98 | 188 |
| | 15 | 1386 | 3.5 | III | 112.18 | 1537 | 2025 | 2124 | 3854 | | | |
| | 13 | 1656 | 3.5 | III | 134.02 | 1532 | 2025 | 2122 | 4043 | | | |
| | 10 | 2057 | 2.9 | III | 166.49 | 1523 | 2025 | 2115 | 4291 | | | |
| | 8.3 | 2559 | 2.3 | III | 207.10 | 1508 | 2025 | 2104 | 4518 | | | |
| | 6.9 | 3066 | 1.9 | II | 248.17 | 1490 | 2025 | 2090 | 4709 | | | |
| | 5 | 4191 | 1.4 | II | 339.15 | 1436 | 2025 | 2052 | 5022 | | | |
| | 4.1 | 5206 | 1.1 | I | 421.32 | 1370 | 2025 | 2007 | 5276 | | | |
| | 3.3 | 6476 | 0.9 | * | 524.08 | 1262 | 2025 | 1935 | 5492 | | | |
| | 2.9 | 7234 | 0.8 | * | 585.41 | 1181 | 2025 | 1883 | 5609 | | | |
| | 3.1 | 5757 | 1.0 | I | 554.68 | 1328 | 2025 | 1980 | 5625 | **SK 32/12 - 71S/4** | 108 | 233 |
| | 2.4 | 7261 | 0.8 | * | 699.55 | 1179 | 2025 | 1881 | 5625 | | | |
| | 9.4 | 2258 | 4.0 | III | 182.76 | 1872 | 2700 | 2590 | 3960 | **SK 43 - 71S/4** | 144 | 194 |
| | 7.8 | 2710 | 3.9 | III | 219.32 | 1863 | 2700 | 2583 | 4154 | | | |
| | 6.5 | 3261 | 3.4 | III | 263.93 | 1847 | 2700 | 2572 | 4338 | | | |
| | 5.7 | 3692 | 2.7 | III | 298.80 | 1836 | 2700 | 2563 | 4464 | | | |
| | 4.8 | 4443 | 2.6 | III | 359.59 | 1809 | 2700 | 2545 | 4649 | | | |
| | 4.1 | 5203 | 2.0 | III | 421.11 | 1775 | 2700 | 2520 | 4815 | | | |
| | 3.2 | 6529 | 1.3 | I | 528.37 | 1706 | 2700 | 2471 | 5011 | | | |
| | 2.8 | 7646 | 1.3 | I | 618.76 | 1629 | 2700 | 2419 | 5175 | | | |
| | 2.2 | 9441 | 1.0 | I | 764.03 | 1472 | 2700 | 2318 | 5378 | | | |
| | 3.9 | 4499 | 2.4 | III | 433.49 | 1807 | 2700 | 2543 | 4948 | **SK 42/12 - 71S/4** | 146 | 233 |
| | 3.1 | 5716 | 1.9 | II | 550.73 | 1751 | 2700 | 2502 | 5200 | | | |
| | 2.3 | 7788 | 1.4 | II | 750.33 | 1618 | 2700 | 2412 | 5499 | | | |
| | 1.5 | 11569 | 0.9 | * | 1114.65 | 1206 | 2700 | 2158 | 5828 | | | |
| | 3.5 | 5099 | 3.2 | III | 491.28 | 3159 | 5344 | 4437 | 9000 | **SK 52/12 - 71S/4** | 210 | 233 |
| | 3.2 | 5627 | 2.9 | III | 542.09 | 3150 | 5344 | 4430 | 9000 | | | |
| | 2.5 | 7156 | 2.3 | III | 689.41 | 3112 | 5344 | 4403 | 9000 | | | |
| | 1.9 | 9537 | 1.7 | II | 918.83 | 3033 | 5344 | 4347 | 9000 | | | |
| | 1.2 | 14795 | 1.1 | I | 1425.44 | 2765 | 5344 | 4165 | 9000 | | | |
| | 1 | 17800 | 0.9 | * | 1714.92 | 2543 | 5344 | 4021 | 9000 | | | |
| | 1.6 | 11044 | 2.6 | III | 1064.04 | 4469 | 10125 | 6293 | 10125 | **SK 63/23 - 71S/4** | 356 | 235 |
| | 1.2 | 14622 | 1.9 | II | 1408.77 | 4367 | 10125 | 6221 | 10125 | | | |
| | 1 | 17402 | 1.6 | II | 1676.63 | 4266 | 10125 | 6149 | 10125 | | | |

(AGMA Class I = $f_B$ 1.0 - 1.39 II = $f_B$ 1.4 - 1.99 III = $f_B$ ≥ 2.0 * = $f_B$ < 1.0)


Send Quote Requests to info@automatedpt.com
Call +1(800)985-6929 To Order or Order Online At Nordgearmotors.com

# 0.5 hp Gearmotors

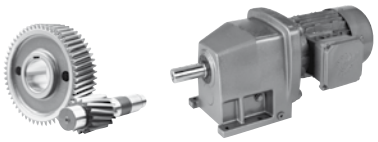

DRIVESYSTEMS

GEARMOTORS

| Motor Power $P_n$ [hp] | Output Speed $n_2$ [rpm] | Output Torque $T_2$ [lb-in] | Service Factor $f_B$ | AGMA Class | Gear Ratio $i_{tot}$ | Standard Bearings $F_{RN}$ OHL [lb] | Standard Bearings $F_{AN}$ Thrust [lb] | Heavy Duty Bearings (VL) $F_{RVL}$ OHL [lb] | Heavy Duty Bearings (VL) $F_{AVL}$ Thrust [lb] | Model Type | Weight [lb] | Dim. Page |
|---|---|---|---|---|---|---|---|---|---|---|---|---|
| 0.5 | 1274 | 25 | 8.5 | III | 1.35 | | 547 | | | SK 11E - 71L/4 | 27 | 152 |
| | 1117 | 28 | 8.3 | III | 1.54 | | 581 | | | | | |
| | 950 | 33 | 8.0 | III | 1.81 | | 621 | | | | | |
| | 843 | 37 | 7.7 | III | 2.04 | | 653 | | | | | |
| | 741 | 42 | 7.4 | III | 2.32 | | 691 | | | | | |
| | 608 | 51 | 6.9 | III | 2.83 | | 752 | | | | | |
| | 541 | 58 | 6.1 | III | 3.18 | | 790 | | | | | |
| | 478 | 65 | 5.7 | III | 3.60 | | 833 | | | | | |
| | 212 | 147 | 1.8 | II | 8.10 | | 956 | | | | | |
| | 189 | 166 | 1.2 | I | 9.11 | | 956 | | | | | |
| | 583 | 54 | 7.2 | III | 2.95 | 333 | 572 | 477 | 677 | SK 02 - 71L/4 | 32 | 167 |
| | 509 | 61 | 6.9 | III | 3.38 | 349 | 603 | 497 | 707 | | | |
| | 442 | 71 | 6.6 | III | 3.89 | 365 | 639 | 520 | 738 | | | |
| | 408 | 77 | 6.0 | III | 4.22 | 374 | 662 | 533 | 758 | | | |
| | 357 | 88 | 5.8 | III | 4.82 | 389 | 693 | 556 | 788 | | | |
| | 309 | 101 | 5.0 | III | 5.57 | 407 | 736 | 583 | 826 | | | |
| | 282 | 111 | 4.5 | III | 6.10 | 421 | 736 | 601 | 851 | | | |
| | 250 | 125 | 4.3 | III | 6.89 | 437 | 736 | 621 | 880 | | | |
| | 221 | 142 | 3.9 | III | 7.80 | 452 | 736 | 644 | 911 | | | |
| | 210 | 149 | 3.7 | III | 8.19 | 461 | 736 | 655 | 927 | | | |
| | 185 | 169 | 3.4 | III | 9.28 | 477 | 736 | 680 | 961 | | | |
| | 173 | 181 | 3.1 | III | 9.95 | 488 | 736 | 695 | 981 | | | |
| | 153 | 205 | 2.9 | III | 11.27 | 509 | 736 | 720 | 1017 | | | |
| | 134 | 233 | 2.7 | III | 12.82 | 527 | 736 | 747 | 1055 | | | |
| | 108 | 290 | 2.2 | III | 15.95 | 536 | 736 | 749 | 1125 | | | |
| | 84 | 374 | 1.7 | II | 20.59 | 529 | 736 | 745 | 1206 | | | |
| | 74 | 421 | 1.6 | II | 23.13 | 527 | 736 | 743 | 1220 | | | |
| | 71 | 443 | 1.8 | II | 24.39 | 524 | 736 | 740 | 1240 | | | |
| | 63 | 500 | 1.5 | II | 27.52 | 520 | 736 | 736 | 1274 | | | |
| | 58 | 538 | 1.5 | II | 29.61 | 515 | 736 | 734 | 1303 | | | |
| | 51 | 608 | 1.4 | II | 33.42 | 506 | 736 | 729 | 1337 | | | |
| | 41 | 756 | 1.2 | I | 41.58 | 486 | 736 | 713 | 1406 | | | |
| | 32 | 976 | 0.8 | * | 53.68 | 441 | 736 | 684 | 1406 | | | |
| | 103 | 304 | 4.5 | III | 16.73 | 641 | 900 | 1143 | 1422 | SK 12 - 71L/4 | 36 | 173 |
| | 92 | 342 | 4.2 | III | 18.79 | 664 | 900 | 1143 | 1467 | | | |
| | 81 | 387 | 3.8 | III | 21.28 | 689 | 900 | 1143 | 1517 | | | |
| | 66 | 471 | 2.6 | III | 25.92 | 720 | 900 | 1141 | 1580 | | | |
| | 59 | 530 | 2.1 | III | 29.15 | 745 | 900 | 1139 | 1627 | | | |
| | 55 | 567 | 2.6 | III | 31.19 | 761 | 900 | 1136 | 1656 | | | |
| | 49 | 638 | 2.1 | III | 35.07 | 785 | 900 | 1134 | 1701 | | | |
| | 45 | 697 | 2.3 | III | 38.31 | 806 | 900 | 1132 | 1746 | | | |
| | 40 | 783 | 1.8 | II | 43.09 | 803 | 900 | 1127 | 1791 | | | |
| | 36 | 870 | 1.8 | II | 47.87 | 797 | 900 | 1123 | 1841 | | | |
| | 32 | 979 | 1.6 | II | 53.84 | 788 | 900 | 1118 | 1890 | | | |
| | 28 | 1115 | 1.2 | I | 61.35 | 776 | 900 | 1109 | 1942 | | | |
| | 25 | 1244 | 1.4 | II | 68.40 | 763 | 900 | 1098 | 1973 | SK 13 - 71L/4 | 47 | 176 |
| | 20 | 1554 | 1.0 | I | 85.47 | 720 | 900 | 1071 | 2066 | | | |
| | 16 | 1977 | 0.8 | * | 108.72 | 644 | 900 | 1019 | 2144 | | | |
| | 37 | 835 | 3.1 | III | 45.90 | 1213 | 1260 | 1679 | 2212 | SK 22 - 71L/4 | 56 | 179 |
| | 31 | 1005 | 2.8 | III | 55.28 | 1206 | 1260 | 1672 | 2320 | | | |
| | 25 | 1269 | 1.8 | II | 69.81 | 1193 | 1260 | 1663 | 2450 | | | |
| | 20 | 1569 | 1.4 | II | 86.30 | 1172 | 1260 | 1649 | 2581 | | | |

(AGMA Class I = $f_B$ 1.0 - 1.39 II = $f_B$ 1.4 - 1.99 III = $f_B$ ≥ 2.0 * = $f_B$ < 1.0)


Send Quote Requests to info@automatedpt.com
Call +1(800)985-6929 To Order or Order Online At Nordgearmotors.com

NORD DRIVESYSTEMS

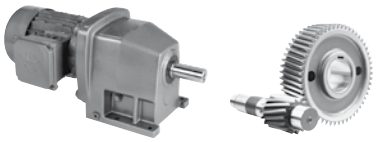

# 0.5 hp Gearmotors



| Motor Power $P_n$ [hp] | Output Speed $n_2$ [rpm] | Output Torque $T_a$ [lb-in] | Service Factor $f_B$ | AGMA Class | Gear Ratio $i_{tot}$ | Standard Bearings $F_{RN}$ OHL [lb] | Standard Bearings $F_{AN}$ Thrust [lb] | Heavy Duty Bearings (VL) $F_{RVL}$ OHL [lb] | Heavy Duty Bearings (VL) $F_{AVL}$ Thrust [lb] | Model Type | Weight [lb] | Dim. Page |
|---|---|---|---|---|---|---|---|---|---|---|---|---|
| 0.5 | 27 | 1178 | 2.6 | III | 64.80 | 1197 | 1260 | 1667 | 2403 | SK 23 - 71L/4 | 73 | 182 |
| | 22 | 1419 | 2.1 | III | 78.05 | 1184 | 1260 | 1656 | 2516 | | | |
| | 19 | 1608 | 1.9 | II | 88.45 | 1170 | 1260 | 1647 | 2588 | | | |
| | 17 | 1829 | 1.6 | II | 100.60 | 1152 | 1260 | 1636 | 2655 | | | |
| | 14 | 2258 | 1.3 | I | 124.17 | 1112 | 1260 | 1607 | 2768 | | | |
| | 11 | 2753 | 0.9 | * | 151.44 | 1051 | 1260 | 1566 | 2813 | | | |
| | 9.6 | 3264 | 0.8 | * | 179.50 | 972 | 1260 | 1512 | 2909 | | | |
| | 24 | 1323 | 3.7 | III | 72.76 | 1537 | 2025 | 2126 | 3380 | SK 32 - 71L/4 | 80 | 185 |
| | 21 | 1478 | 3.1 | III | 81.27 | 1535 | 2025 | 2124 | 3479 | | | |
| | 20 | 1603 | 3.0 | III | 88.18 | 1532 | 2025 | 2122 | 3535 | SK 33N - 71L/4 | 100 | 188 |
| | 15 | 2040 | 2.4 | III | 112.18 | 1523 | 2025 | 2115 | 3740 | | | |
| | 13 | 2437 | 2.4 | III | 134.02 | 1512 | 2025 | 2106 | 3917 | | | |
| | 10 | 3027 | 2.0 | III | 166.49 | 1492 | 2025 | 2093 | 4122 | | | |
| | 8.3 | 3765 | 1.6 | II | 207.10 | 1458 | 2025 | 2068 | 4334 | | | |
| | 6.9 | 4512 | 1.3 | I | 248.17 | 1418 | 2025 | 2041 | 4482 | | | |
| | 5.1 | 6166 | 0.9 | * | 339.15 | 1292 | 2025 | 1955 | 4687 | | | |
| | 4.1 | 7660 | 0.8 | * | 421.32 | 1130 | 2025 | 1852 | 4894 | | | |
| | 9.4 | 3323 | 2.7 | III | 182.76 | 1847 | 2700 | 2572 | 3803 | SK 43 - 71L/4 | 146 | 194 |
| | 7.8 | 3987 | 2.7 | III | 219.32 | 1825 | 2700 | 2556 | 3971 | | | |
| | 6.5 | 4799 | 2.3 | III | 263.93 | 1793 | 2700 | 2534 | 4127 | | | |
| | 5.8 | 5433 | 1.8 | II | 298.80 | 1764 | 2700 | 2513 | 4214 | | | |
| | 4.8 | 6538 | 1.7 | II | 359.59 | 1703 | 2700 | 2471 | 4374 | | | |
| | 4.1 | 7656 | 1.4 | II | 421.11 | 1629 | 2700 | 2419 | 4487 | | | |
| | 3.3 | 9606 | 0.9 | * | 528.37 | 1454 | 2700 | 2306 | 4604 | | | |
| | 2.8 | 11250 | 0.9 | * | 618.76 | 1253 | 2700 | 2185 | 4694 | | | |
| | 3.1 | 8930 | 1.2 | I | 550.73 | 1521 | 2700 | 2349 | 4761 | SK 42/12 - 71L/4 | 148 | 233 |
| | 2.6 | 10878 | 1.0 | I | 670.81 | 1305 | 2700 | 2214 | 4860 | | | |
| | 2.3 | 12167 | 0.9 | * | 750.33 | 1107 | 2700 | 2104 | 4907 | | | |
| | 18 | 1586 | 9.3 | III | 97.80 | 3204 | 5344 | 4469 | 9000 | SK 52/12 - 71L/4 | 212 | 233 |
| | 6.1 | 4591 | 3.5 | III | 283.13 | 3170 | 5344 | 4444 | 9000 | | | |
| | 4.9 | 5741 | 2.8 | III | 354.06 | 3146 | 5344 | 4428 | 9000 | | | |
| | 3.5 | 7966 | 2.0 | III | 491.28 | 3087 | 5344 | 4385 | 9000 | | | |
| | 3.2 | 8790 | 1.8 | II | 542.09 | 3060 | 5344 | 4367 | 9000 | | | |
| | 2.5 | 11179 | 1.4 | II | 689.41 | 2963 | 5344 | 4300 | 9000 | | | |
| | 1.9 | 14899 | 1.1 | I | 918.83 | 2759 | 5344 | 4160 | 9000 | | | |
| | 1.5 | 18556 | 0.9 | * | 1144.36 | 2475 | 5344 | 3978 | 9000 | | | |
| | 3.1 | 8958 | 3.2 | III | 552.45 | 4514 | 8672 | 6325 | 10125 | SK 63/22 - 71L/4 | 340 | 234 |
| | 2.4 | 11796 | 2.4 | III | 727.45 | 4451 | 9306 | 6280 | 10125 | | | |
| | 2 | 13779 | 2.1 | III | 849.73 | 4394 | 9639 | 6239 | 10125 | | | |
| | 1.6 | 17254 | 1.6 | II | 1064.04 | 4271 | 10125 | 6154 | 10125 | SK 63/23 - 71L/4 | 358 | 235 |
| | 1.2 | 22844 | 1.2 | I | 1408.77 | 4005 | 10125 | 5972 | 10125 | | | |
| | 1 | 27188 | 1.0 | I | 1676.63 | 3731 | 10125 | 5792 | 10125 | | | |
| | 1.9 | 14402 | 3.1 | III | 888.16 | 6246 | 9155 | 8944 | 11250 | SK 73/22 - 71L/4 | 519 | 234 |
| | 1.6 | 17835 | 2.5 | III | 1099.84 | 6174 | 9623 | 8892 | 11250 | | | |
| | 1.4 | 20335 | 2.2 | III | 1254.07 | 6111 | 9920 | 8849 | 11250 | | | |

(AGMA Class I = $f_B$ 1.0 - 1.39 II = $f_B$ 1.4 - 1.99 III = $f_B$ ≥ 2.0 * = $f_B$ < 1.0)


Send Quote Requests to info@automatedpt.com
Call +1(800)985-6929 To Order or Order Online At Nordgearmotors.com

# 0.75 hp Gearmotors

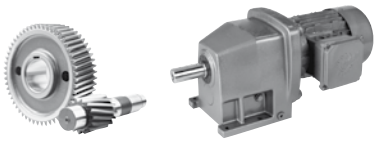

DRIVESYSTEMS

GEARMOTORS

| Motor Power $P_n$ [hp] | Output Speed $n_2$ [rpm] | Output Torque $T_2$ [lb-in] | Service Factor $f_B$ | AGMA Class | Gear Ratio $i_{tot}$ | Standard Bearings $F_{RN}$ OHL [lb] | Standard Bearings $F_{AN}$ Thrust [lb] | Heavy Duty Bearings (VL) $F_{RVL}$ OHL [lb] | Heavy Duty Bearings (VL) $F_{AVL}$ Thrust [lb] | Model Type | Weight [lb] | Dim. Page |
|---|---|---|---|---|---|---|---|---|---|---|---|---|
| 0.75 | 1267 | 37 | 5.6 | III | 1.35 | | 549 | | | SK 11E - 80S/4 | 31 | 152 |
| | 1110 | 43 | 5.5 | III | 1.54 | | 581 | | | | | |
| | 945 | 50 | 5.3 | III | 1.81 | | 623 | | | | | |
| | 838 | 56 | 5.1 | III | 2.04 | | 657 | | | | | |
| | 737 | 64 | 4.9 | III | 2.32 | | 693 | | | | | |
| | 604 | 78 | 4.6 | III | 2.83 | | 756 | | | | | |
| | 538 | 88 | 4.0 | III | 3.18 | | 797 | | | | | |
| | 475 | 100 | 3.7 | III | 3.60 | | 837 | | | | | |
| | 211 | 224 | 1.2 | I | 8.10 | | 956 | | | | | |
| | 580 | 82 | 4.7 | III | 2.95 | 331 | 558 | 470 | 666 | SK 02 - 80S/4 | 35 | 167 |
| | 506 | 94 | 4.5 | III | 3.38 | 344 | 590 | 488 | 693 | | | |
| | 440 | 108 | 4.3 | III | 3.89 | 358 | 619 | 511 | 722 | | | |
| | 405 | 117 | 3.9 | III | 4.22 | 369 | 646 | 524 | 743 | | | |
| | 355 | 133 | 3.8 | III | 4.82 | 383 | 671 | 542 | 767 | | | |
| | 307 | 154 | 3.3 | III | 5.57 | 401 | 713 | 569 | 803 | | | |
| | 280 | 169 | 3.0 | III | 6.10 | 412 | 736 | 587 | 830 | | | |
| | 248 | 191 | 2.8 | III | 6.89 | 425 | 736 | 605 | 855 | | | |
| | 219 | 216 | 2.6 | III | 7.80 | 441 | 736 | 626 | 880 | | | |
| | 209 | 227 | 2.5 | III | 8.19 | 448 | 736 | 635 | 896 | | | |
| | 184 | 257 | 2.2 | III | 9.28 | 464 | 736 | 657 | 927 | | | |
| | 172 | 275 | 2.1 | III | 9.95 | 475 | 736 | 673 | 947 | | | |
| | 152 | 312 | 1.9 | II | 11.27 | 491 | 736 | 698 | 977 | | | |
| | 133 | 355 | 1.7 | II | 12.82 | 506 | 736 | 718 | 1008 | | | |
| | 107 | 441 | 1.4 | II | 15.95 | 524 | 736 | 740 | 1069 | | | |
| | 83 | 570 | 1.1 | I | 20.59 | 511 | 736 | 731 | 1134 | | | |
| | 70 | 675 | 1.2 | I | 24.39 | 497 | 736 | 722 | 1148 | | | |
| | 58 | 820 | 1.0 | I | 29.61 | 475 | 736 | 707 | 1195 | | | |
| | 160 | 296 | 4.0 | III | 10.7 | 551 | 900 | 1145 | 1240 | SK 12 - 80S/4 | 40 | 173 |
| | 128 | 371 | 3.6 | III | 13.39 | 585 | 900 | 1143 | 1307 | | | |
| | 102 | 463 | 2.9 | III | 16.73 | 623 | 900 | 1141 | 1386 | | | |
| | 91 | 520 | 2.7 | III | 18.79 | 644 | 900 | 1139 | 1427 | | | |
| | 80 | 589 | 2.5 | III | 21.28 | 666 | 900 | 1136 | 1472 | | | |
| | 66 | 717 | 1.7 | II | 25.92 | 686 | 900 | 1132 | 1517 | | | |
| | 55 | 863 | 1.7 | II | 31.19 | 720 | 900 | 1123 | 1582 | | | |
| | 45 | 1060 | 1.5 | II | 38.31 | 758 | 900 | 1112 | 1656 | | | |
| | 36 | 1325 | 1.2 | I | 47.87 | 709 | 900 | 1091 | 1735 | | | |
| | 69 | 684 | 3.2 | III | 24.73 | 1017 | 1260 | 1681 | 1834 | SK 22 - 80S/4 | 60 | 179 |
| | 58 | 811 | 3.2 | III | 29.31 | 1069 | 1260 | 1679 | 1915 | | | |
| | 48 | 984 | 3.0 | III | 35.55 | 1130 | 1260 | 1674 | 2012 | | | |
| | 40 | 1185 | 2.5 | III | 42.82 | 1190 | 1260 | 1667 | 2104 | | | |
| | 37 | 1270 | 2.0 | III | 45.90 | 1193 | 1260 | 1663 | 2129 | | | |
| | 31 | 1530 | 1.9 | II | 55.28 | 1177 | 1260 | 1652 | 2223 | | | |
| | 24 | 1932 | 1.2 | I | 69.81 | 1143 | 1260 | 1629 | 2329 | | | |
| | 20 | 2389 | 0.9 | * | 86.30 | 1098 | 1260 | 1598 | 2435 | | | |
| | 17 | 2784 | 1.1 | I | 100.60 | 1046 | 1260 | 1562 | 2475 | SK 23 - 80S/4 | 77 | 182 |
| | 14 | 3437 | 0.9 | * | 124.17 | 938 | 1260 | 1492 | 2547 | | | |
| | 30 | 1592 | 3.4 | III | 57.53 | 1532 | 2025 | 2122 | 3098 | SK 32 - 80S/4 | 84 | 185 |
| | 27 | 1779 | 3.2 | III | 64.26 | 1528 | 2025 | 2120 | 3184 | | | |
| | 24 | 2014 | 2.5 | III | 72.76 | 1523 | 2025 | 2115 | 3278 | | | |
| | 21 | 2249 | 2.0 | III | 81.27 | 1517 | 2025 | 2111 | 3368 | | | |

(AGMA Class I = $f_B$ 1.0 - 1.39 II = $f_B$ 1.4 - 1.99 III = $f_B$ ≥ 2.0 * = $f_B$ < 1.0)


Send Quote Requests to info@automatedpt.com
Call +1(800)985-6929 To Order or Order Online At Nordgearmotors.com

NORD DRIVESYSTEMS

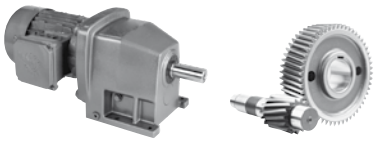

# 0.75 hp Gearmotors



| Motor Power $P_n$ [hp] | Output Speed $n_2$ [rpm] | Output Torque $T_a$ [lb-in] | Service Factor $f_B$ | AGMA Class | Gear Ratio $i_{tot}$ | Standard Bearings $F_{RN}$ OHL [lb] | Standard Bearings $F_{AN}$ Thrust [lb] | Heavy Duty Bearings (VL) $F_{RVL}$ OHL [lb] | Heavy Duty Bearings (VL) $F_{AVL}$ Thrust [lb] | Model Type | Weight [lb] | Dim. Page |
|---|---|---|---|---|---|---|---|---|---|---|---|---|
| 0.75 | 19 | 2441 | 1.9 | II | 88.18 | 1512 | 2025 | 2106 | 3395 | SK 33N - 80S/4 | 104 | 188 |
| | 15 | 3105 | 1.6 | II | 112.18 | 1487 | 2025 | 2090 | 3575 | | | |
| | 13 | 3709 | 1.6 | II | 134.02 | 1460 | 2025 | 2070 | 3708 | | | |
| | 10 | 4608 | 1.3 | I | 166.49 | 1411 | 2025 | 2036 | 3886 | | | |
| | 8.3 | 5732 | 1.0 | I | 207.10 | 1330 | 2025 | 1980 | 4025 | | | |
| | 7.9 | 5540 | 1.0 | I | 215.56 | 1346 | 2025 | 1991 | 4077 | SK 32/12 - 80S/4 | 114 | 233 |
| | 6.4 | 6883 | 0.8 | * | 267.79 | 1222 | 2025 | 1908 | 4244 | | | |
| | 21 | 2213 | 4.7 | III | 79.96 | 1872 | 2700 | 2590 | 3044 | SK 43 - 80S/4 | 150 | 194 |
| | 18 | 2628 | 4.2 | III | 94.96 | 1863 | 2700 | 2583 | 3164 | | | |
| | 16 | 2976 | 3.3 | III | 107.51 | 1856 | 2700 | 2579 | 3245 | | | |
| | 13 | 3581 | 3.1 | III | 129.38 | 1838 | 2700 | 2565 | 3377 | | | |
| | 12 | 3918 | 2.4 | III | 141.55 | 1827 | 2700 | 2558 | 3411 | | | |
| | 10 | 4701 | 2.2 | III | 169.86 | 1798 | 2700 | 2536 | 3551 | | | |
| | 9.4 | 5058 | 1.8 | II | 182.76 | 1782 | 2700 | 2525 | 3566 | | | |
| | 8.4 | 5658 | 2.0 | III | 204.42 | 1753 | 2700 | 2504 | 3677 | | | |
| | 7.8 | 6070 | 1.7 | II | 219.32 | 1730 | 2700 | 2491 | 3695 | | | |
| | 7.4 | 6406 | 1.5 | II | 231.43 | 1712 | 2700 | 2477 | 3726 | | | |
| | 6.5 | 7305 | 1.5 | II | 263.93 | 1654 | 2700 | 2437 | 3803 | | | |
| | 6.1 | 7709 | 1.5 | II | 278.51 | 1625 | 2700 | 2417 | 3834 | | | |
| | 5.7 | 8270 | 1.2 | I | 298.80 | 1580 | 2700 | 2387 | 3841 | | | |
| | 4.8 | 9953 | 1.1 | I | 359.59 | 1418 | 2700 | 2282 | 3915 | | | |
| | 4.1 | 11656 | 0.9 | * | 421.11 | 1193 | 2700 | 2149 | 3992 | | | |
| | 9.6 | 4905 | 3.5 | III | 177.22 | 3164 | 5344 | 4439 | 9000 | SK 53 - 80S/4 | 223 | 200 |
| | 9.2 | 5140 | 3.1 | III | 185.72 | 3159 | 5344 | 4437 | 9000 | | | |
| | 7.2 | 6538 | 2.6 | III | 236.21 | 3128 | 5344 | 4415 | 9000 | | | |
| | 7 | 6797 | 2.4 | III | 245.56 | 3121 | 5344 | 4410 | 9000 | | | |
| | 5.8 | 8145 | 2.4 | III | 294.26 | 3083 | 5344 | 4381 | 9000 | | | |
| | 4.6 | 10359 | 1.6 | II | 374.25 | 2999 | 5344 | 4325 | 9000 | | | |
| | 4.4 | 10855 | 1.5 | II | 392.20 | 2979 | 5344 | 4309 | 9000 | | | |
| | 3.4 | 13806 | 1.2 | I | 498.82 | 2826 | 5344 | 4205 | 9000 | | | |
| | 3.1 | 15192 | 1.1 | I | 548.89 | 2738 | 5344 | 4149 | 9000 | | | |
| | 2.8 | 16809 | 1.0 | I | 607.30 | 2621 | 5344 | 4073 | 9000 | | | |
| | 4.6 | 9466 | 3.0 | III | 368.29 | 4505 | 7592 | 6318 | 10125 | SK 63/22 - 80S/4 | 344 | 234 |
| | 4 | 11056 | 2.6 | III | 430.19 | 4469 | 7875 | 6293 | 10125 | | | |
| | 3.1 | 14199 | 2.0 | III | 552.45 | 4381 | 8345 | 6230 | 10125 | | | |
| | 2.4 | 18696 | 1.5 | II | 727.45 | 4212 | 8840 | 6113 | 10125 | | | |
| | 2 | 21839 | 1.3 | I | 849.73 | 4061 | 9115 | 6010 | 10125 | | | |
| | 1.6 | 27347 | 1.0 | I | 1064.04 | 3719 | 9486 | 5785 | 10125 | SK 63/23 - 80S/4 | 362 | 235 |
| | 1.2 | 36207 | 0.8 | * | 1408.77 | 2882 | 9891 | 5285 | 10125 | | | |
| | 3 | 14567 | 3.0 | III | 566.77 | 6244 | 7900 | 8942 | 11250 | SK 73/22 - 80S/4 | 523 | 234 |
| | 2.3 | 18957 | 2.3 | III | 737.61 | 6147 | 8384 | 8874 | 11250 | | | |
| | 1.9 | 22827 | 1.9 | II | 888.16 | 6037 | 8712 | 8798 | 11250 | | | |
| | 1.6 | 28267 | 1.6 | II | 1099.84 | 5846 | 9068 | 8667 | 11250 | | | |
| | 1.4 | 32231 | 1.4 | II | 1254.07 | 5675 | 9275 | 8555 | 11250 | | | |
| | 1.9 | 23144 | 3.1 | III | 900.50 | 10040 | 14625 | 14096 | 14625 | SK 83/32 - 80S/4 | 783 | 234 |
| | 1.5 | 29698 | 2.4 | III | 1155.49 | 9923 | 14625 | 14013 | 14625 | | | |
| | 1 | 43361 | 1.6 | II | 1687.12 | 9574 | 14625 | 13770 | 14625 | | | |

(AGMA Class I = $f_B$ 1.0 - 1.39 II = $f_B$ 1.4 - 1.99 III = $f_B$ ≥ 2.0 * = $f_B$ < 1.0)


Send Quote Requests to info@automatedpt.com
Call +1(800)985-6929 To Order or Order Online At Nordgearmotors.com

# 1.0 hp Gearmotors

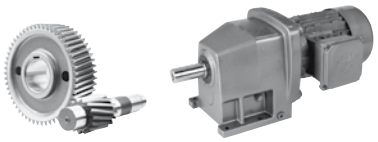

DRIVESYSTEMS

GEARMOTORS

| Motor Power $P_n$ [hp] | Output Speed $n_2$ [rpm] | Output Torque $T_2$ [lb-in] | Service Factor $f_B$ | AGMA Class | Gear Ratio $i_{tot}$ | Standard Bearings $F_{RN}$ OHL [lb] | Standard Bearings $F_{AN}$ Thrust [lb] | Heavy Duty Bearings (VL) $F_{RVL}$ OHL [lb] | Heavy Duty Bearings (VL) $F_{AVL}$ Thrust [lb] | Model Type | Weight [lb] | Dim. Page |
|---|---|---|---|---|---|---|---|---|---|---|---|---|
| 1.0 | 1222 | 52 | 4.1 | III | 1.35 | | 558 | | | SK 11E - 80L/4 | 33 | 152 |
| | 1071 | 59 | 3.9 | III | 1.54 | | 594 | | | SK 11E - 80LH/4 | | |
| | 912 | 70 | 3.8 | III | 1.81 | | 632 | | | | | |
| | 809 | 78 | 3.7 | III | 2.04 | | 666 | | | | | |
| | 711 | 89 | 3.5 | III | 2.32 | | 704 | | | | | |
| | 583 | 109 | 3.3 | III | 2.83 | | 767 | | | | | |
| | 519 | 122 | 2.9 | III | 3.18 | | 806 | | | | | |
| | 458 | 138 | 2.7 | III | 3.60 | | 851 | | | | | |
| | 204 | 311 | 0.9 | * | 8.10 | | 956 | | | | | |
| | 559 | 113 | 3.4 | III | 2.95 | 329 | 551 | 466 | 659 | SK 02 - 80L/4 | 37 | 167 |
| | 488 | 130 | 3.3 | III | 3.38 | 342 | 578 | 486 | 686 | SK 02 - 80LH/4 | | |
| | 424 | 149 | 3.1 | III | 3.89 | 356 | 608 | 504 | 713 | | | |
| | 391 | 162 | 2.8 | III | 4.22 | 365 | 632 | 520 | 734 | | | |
| | 342 | 185 | 2.7 | III | 4.82 | 378 | 655 | 533 | 754 | | | |
| | 296 | 214 | 2.4 | III | 5.57 | 396 | 695 | 560 | 790 | | | |
| | 270 | 234 | 2.2 | III | 6.10 | 410 | 725 | 578 | 815 | | | |
| | 239 | 265 | 2.0 | III | 6.89 | 419 | 736 | 592 | 833 | | | |
| | 212 | 300 | 1.9 | II | 7.80 | 432 | 736 | 612 | 860 | | | |
| | 201 | 315 | 1.8 | II | 8.19 | 441 | 736 | 623 | 873 | | | |
| | 178 | 357 | 1.6 | II | 9.28 | 452 | 736 | 639 | 900 | | | |
| | 166 | 382 | 1.5 | II | 9.95 | 464 | 736 | 655 | 918 | | | |
| | 146 | 433 | 1.4 | II | 11.27 | 477 | 736 | 673 | 945 | | | |
| | 129 | 493 | 1.3 | I | 12.82 | 491 | 736 | 693 | 968 | | | |
| | 103 | 613 | 1.0 | I | 15.95 | 506 | 736 | 727 | 1017 | | | |
| | 80 | 791 | 0.8 | * | 20.59 | 479 | 736 | 709 | 1069 | | | |
| | 68 | 937 | 0.8 | * | 24.39 | 252 | 736 | 691 | 1058 | | | |
| | 227 | 280 | 3.9 | III | 7.28 | 486 | 882 | 1145 | 1109 | SK 12 - 80L/4 | 42 | 173 |
| | 210 | 302 | 3.7 | III | 7.85 | 495 | 900 | 1145 | 1130 | SK 12 - 80LH/4 | | |
| | 193 | 329 | 3.5 | III | 8.56 | 509 | 900 | 1143 | 1157 | | | |
| | 171 | 371 | 3.2 | III | 9.65 | 527 | 900 | 1143 | 1190 | | | |
| | 154 | 411 | 2.9 | III | 10.70 | 542 | 900 | 1141 | 1224 | | | |
| | 123 | 514 | 2.6 | III | 13.39 | 574 | 900 | 1139 | 1287 | | | |
| | 99 | 643 | 2.1 | III | 16.73 | 608 | 900 | 1134 | 1359 | | | |
| | 88 | 722 | 2.0 | III | 18.79 | 628 | 900 | 1132 | 1397 | | | |
| | 78 | 818 | 1.8 | II | 21.28 | 644 | 900 | 1127 | 1431 | | | |
| | 64 | 996 | 1.2 | I | 25.92 | 558 | 900 | 1116 | 1458 | | | |
| | 53 | 1198 | 1.2 | I | 31.19 | 482 | 900 | 1103 | 1517 | | | |
| | 43 | 1472 | 1.1 | I | 38.31 | 351 | 900 | 1078 | 1573 | | | |
| | 34 | 1839 | 0.9 | * | 47.87 | 155 | 900 | 1037 | 1629 | | | |
| | 67 | 950 | 2.3 | III | 24.73 | 997 | 1260 | 1674 | 1796 | SK 22 - 80L/4 | 62 | 179 |
| | 56 | 1126 | 2.3 | III | 29.31 | 1046 | 1260 | 1670 | 1872 | SK 22 - 80LH/4 | | |
| | 46 | 1366 | 2.1 | III | 35.55 | 1105 | 1260 | 1658 | 1958 | | | |
| | 39 | 1645 | 1.8 | II | 42.82 | 1157 | 1260 | 1645 | 2039 | | | |
| | 36 | 1763 | 1.5 | II | 45.90 | 1159 | 1260 | 1638 | 2057 | | | |
| | 30 | 2124 | 1.3 | I | 55.28 | 1125 | 1260 | 1616 | 2135 | | | |
| | 25 | 2489 | 1.2 | I | 64.80 | 1053 | 1260 | 1589 | 2180 | SK 23 - 80L/4 | 79 | 182 |
| | 21 | 2998 | 1.0 | I | 78.05 | 846 | 1260 | 1541 | 2248 | SK 23 - 80LH/4 | | |
| | 19 | 3398 | 0.9 | * | 88.45 | 599 | 1260 | 1496 | 2273 | | | |
| | 16 | 3865 | 0.8 | * | 100.6 | 299 | 1260 | 1436 | 2300 | | | |

(AGMA Class I = $f_B$ 1.0 - 1.39 II = $f_B$ 1.4 - 1.99 III = $f_B$ ≥ 2.0 * = $f_B$ < 1.0) **(Model Type in blue is an Energy Efficient motor)**


Send Quote Requests to info@automatedpt.com
Call +1(800)985-6929 To Order or Order Online At Nordgearmotors.com

NORD DRIVESYSTEMS

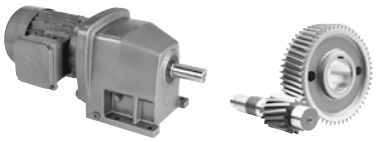

# 1.0 hp Gearmotors



| Motor Power $P_n$ [hp] | Output Speed $n_2$ [rpm] | Output Torque $T_a$ [lb-in] | Service Factor $f_B$ | AGMA Class | Gear Ratio $i_{tot}$ | Standard Bearings $F_{RN}$ OHL [lb] | Standard Bearings $F_{AN}$ Thrust [lb] | Heavy Duty Bearings (VL) $F_{RVL}$ OHL [lb] | Heavy Duty Bearings (VL) $F_{AVL}$ Thrust [lb] | Model Type | Weight [lb] | Dim. Page |
|---|---|---|---|---|---|---|---|---|---|---|---|---|
| 1.0 | 43 | 1489 | 2.7 | III | 38.76 | 1359 | 2025 | 2124 | 2752 | **SK 32 - 80L/4** | 86 | 185 |
| | 36 | 1779 | 2.7 | III | 46.31 | 1429 | 2025 | 2120 | 2878 | **SK 32 - 80LH/4** | | |
| | 29 | 2210 | 2.5 | III | 57.53 | 1519 | 2025 | 2111 | 3040 | | | |
| | 26 | 2469 | 2.3 | III | 64.26 | 1510 | 2025 | 2106 | 3119 | | | |
| | 23 | 2795 | 1.8 | II | 72.76 | 1499 | 2025 | 2097 | 3195 | | | |
| | 20 | 3122 | 1.5 | II | 81.27 | 1487 | 2025 | 2088 | 3272 | | | |
| | 19 | 3388 | 1.4 | II | 88.18 | 1476 | 2025 | 2081 | 3278 | **SK 33N - 80L/4** | 106 | 188 |
| | 15 | 4310 | 1.1 | I | 112.18 | 1429 | 2025 | 2048 | 3411 | **SK 33N - 80LH/4** | | |
| | 12 | 5149 | 1.1 | I | 134.02 | 1375 | 2025 | 2012 | 3524 | | | |
| | 9.9 | 6396 | 0.9 | * | 166.49 | 1271 | 2025 | 1942 | 3661 | | | |
| | 24 | 2694 | 3.6 | III | 70.12 | 1863 | 2700 | 2583 | 2882 | **SK 43 - 80L/4** | 152 | 194 |
| | 21 | 3072 | 3.4 | III | 79.96 | 1854 | 2700 | 2576 | 2972 | **SK 43 - 80LH/4** | | |
| | 17 | 3648 | 3.0 | III | 94.96 | 1836 | 2700 | 2563 | 3069 | | | |
| | 15 | 4130 | 2.4 | III | 107.51 | 1820 | 2700 | 2552 | 3128 | | | |
| | 13 | 4970 | 2.2 | III | 129.38 | 1787 | 2700 | 2529 | 3236 | | | |
| | 12 | 5438 | 1.7 | II | 141.55 | 1764 | 2700 | 2513 | 3240 | | | |
| | 9.7 | 6526 | 1.6 | II | 169.86 | 1706 | 2700 | 2471 | 3346 | | | |
| | 9 | 7021 | 1.3 | I | 182.76 | 1674 | 2700 | 2450 | 3339 | | | |
| | 8.1 | 7853 | 1.5 | II | 204.42 | 1613 | 2700 | 2410 | 3427 | | | |
| | 7.5 | 8426 | 1.3 | I | 219.32 | 1566 | 2700 | 2378 | 3427 | | | |
| | 7.1 | 8891 | 1.1 | I | 231.43 | 1526 | 2700 | 2351 | 3438 | | | |
| | 6.3 | 10139 | 1.1 | I | 263.93 | 1395 | 2700 | 2268 | 3483 | | | |
| | 5.9 | 10700 | 1.1 | I | 278.51 | 1328 | 2700 | 2228 | 3483 | | | |
| | 5.5 | 11479 | 0.9 | * | 298.80 | 1220 | 2700 | 2165 | 3461 | | | |
| | 4.6 | 13814 | 0.8 | * | 359.59 | 738 | 2700 | 1935 | 3461 | | | |
| | 12 | 5353 | 3.3 | III | 139.34 | 3155 | 5344 | 4433 | 9000 | **SK 53 - 80L/4** | 225 | 200 |
| | 9.3 | 6808 | 2.5 | III | 177.22 | 3121 | 5344 | 4410 | 9000 | **SK 53 - 80LH/4** | | |
| | 8.9 | 7135 | 2.3 | III | 185.72 | 3112 | 5344 | 4403 | 9000 | | | |
| | 7 | 9074 | 1.9 | II | 236.21 | 3051 | 5344 | 4361 | 9000 | | | |
| | 6.7 | 9434 | 1.7 | II | 245.56 | 3038 | 5344 | 4349 | 9000 | | | |
| | 5.6 | 11305 | 1.7 | II | 294.26 | 2959 | 5344 | 4295 | 9000 | | | |
| | 4.4 | 14378 | 1.2 | I | 374.25 | 2792 | 5344 | 4183 | 9000 | | | |
| | 4.2 | 15067 | 1.1 | I | 392.20 | 2747 | 5344 | 4154 | 9000 | | | |
| | 3.3 | 19163 | 0.9 | * | 498.82 | 2419 | 5344 | 3944 | 9000 | | | |
| | 3 | 21087 | 0.8 | * | 548.89 | 2216 | 5344 | 3823 | 9000 | | | |
| | 7.3 | 8182 | 3.5 | III | 224.97 | 4529 | 6624 | 6336 | 10125 | **SK 63/22 - 80L/4** | 346 | 234 |
| | 5.8 | 10282 | 2.8 | III | 282.73 | 4487 | 6995 | 6305 | 10125 | **SK 63/22 - 80LH/4** | | |
| | 4.5 | 13394 | 2.1 | III | 368.29 | 4406 | 7434 | 6248 | 10125 | | | |
| | 3.8 | 15645 | 1.8 | II | 430.19 | 4331 | 7666 | 6197 | 10125 | | | |
| | 3 | 20092 | 1.4 | II | 552.45 | 4149 | 8042 | 6068 | 10125 | | | |
| | 2.3 | 26456 | 1.1 | I | 727.45 | 3782 | 8424 | 5825 | 10125 | | | |
| | 1.9 | 30903 | 0.9 | * | 849.73 | 3434 | 8615 | 5605 | 10125 | | | |
| | 3.6 | 16645 | 2.7 | III | 457.68 | 6201 | 7340 | 8912 | 11250 | **SK 73/22 - 80L/4** | 525 | 234 |
| | 2.9 | 20612 | 2.1 | III | 566.77 | 6102 | 7664 | 8843 | 11250 | **SK 73/22 - 80 LH/4** | | |
| | 2.2 | 26826 | 1.6 | II | 737.61 | 5902 | 8042 | 8705 | 11250 | | | |
| | 1.9 | 32301 | 1.4 | II | 888.16 | 5672 | 8289 | 8552 | 11250 | | | |
| | 1.5 | 39999 | 1.1 | I | 1099.84 | 5254 | 8532 | 8280 | 11250 | | | |
| | 1.3 | 45608 | 1.0 | I | 1254.07 | 4865 | 8656 | 8039 | 11250 | | | |
| | 2.3 | 26357 | 2.7 | III | 724.73 | 9986 | 14468 | 14058 | 14625 | **SK 83/32 - 80L/4** | 785 | 234 |
| | 1.8 | 32750 | 2.2 | III | 900.50 | 9855 | 14625 | 13966 | 14625 | **SK 83/32 - 80LH/4** | | |
| | 1.4 | 42023 | 1.7 | II | 1155.49 | 9614 | 14625 | 13797 | 14625 | | | |

(AGMA Class I = $f_B$ 1.0 - 1.39 II = $f_B$ 1.4 - 1.99 III = $f_B$ ≥ 2.0 * = $f_B$ < 1.0) **(Model Type in blue is an Energy Efficient motor)**


Send Quote Requests to info@automatedpt.com
Call +1(800)985-6929 To Order or Order Online At Nordgearmotors.com

# 1.5 hp Gearmotors

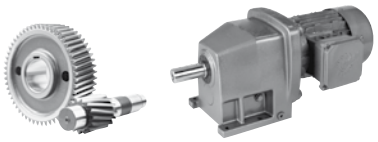

DRIVESYSTEMS

GEARMOTORS

| Motor Power $P_n$ [hp] | Output Speed $n_2$ [rpm] | Output Torque $T_2$ [lb-in] | Service Factor $f_B$ | AGMA Class | Gear Ratio $i_{tot}$ | Standard Bearings $F_{RN}$ OHL [lb] | Standard Bearings $F_{AN}$ Thrust [lb] | Heavy Duty Bearings (VL) $F_{RVL}$ OHL [lb] | Heavy Duty Bearings (VL) $F_{AVL}$ Thrust [lb] | Model Type | Weight [lb] | Dim. Page |
|---|---|---|---|---|---|---|---|---|---|---|---|---|
| 1.5 | 1230 | 77 | 4.3 | III | 1.35 | | 560 | | | SK 11E - 90S/4 | 40 | 152 |
| | 1078 | 88 | 4.1 | III | 1.54 | | 594 | | | SK 11E - 90SH/4 | | |
| | 917 | 103 | 3.9 | III | 1.81 | | 635 | | | | | |
| | 814 | 116 | 3.8 | III | 2.04 | | 666 | | | | | |
| | 716 | 132 | 3.2 | III | 2.32 | | 704 | | | | | |
| | 587 | 161 | 3.0 | III | 2.83 | | 765 | | | | | |
| | 522 | 181 | 2.0 | III | 3.18 | | 806 | | | | | |
| | 461 | 205 | 1.8 | II | 3.60 | | 846 | | | | | |
| | 563 | 168 | 2.4 | III | 2.95 | 317 | 522 | 450 | 635 | SK 02 - 90S/4 | 44 | 167 |
| | 491 | 193 | 2.3 | III | 3.38 | 329 | 542 | 466 | 655 | SK 02 - 90 SH/4 | | |
| | 427 | 222 | 2.1 | III | 3.89 | 340 | 567 | 482 | 677 | | | |
| | 393 | 241 | 1.9 | II | 4.22 | 351 | 590 | 497 | 700 | | | |
| | 344 | 275 | 1.8 | II | 4.82 | 360 | 608 | 506 | 711 | | | |
| | 298 | 318 | 1.6 | II | 5.57 | 376 | 641 | 531 | 745 | | | |
| | 272 | 348 | 1.5 | II | 6.10 | 389 | 668 | 549 | 770 | | | |
| | 241 | 393 | 1.4 | II | 6.89 | 394 | 680 | 556 | 776 | | | |
| | 213 | 445 | 1.3 | I | 7.80 | 405 | 700 | 569 | 797 | | | |
| | 203 | 467 | 1.2 | I | 8.19 | 412 | 716 | 581 | 808 | | | |
| | 179 | 529 | 1.1 | I | 9.28 | 401 | 736 | 594 | 826 | | | |
| | 167 | 567 | 1.0 | I | 9.95 | 401 | 736 | 605 | 842 | | | |
| | 147 | 643 | 0.9 | * | 11.27 | 349 | 736 | 619 | 857 | | | |
| | 129 | 731 | 0.8 | * | 12.82 | 277 | 736 | 630 | 873 | | | |
| | 417 | 227 | 3.9 | III | 3.98 | 392 | 659 | 1145 | 916 | SK 12 - 90S/4 | 49 | 173 |
| | 384 | 246 | 4.0 | III | 4.32 | 403 | 686 | 1145 | 941 | SK 12 - 90SH/4 | | |
| | 370 | 256 | 3.8 | III | 4.49 | 405 | 686 | 1145 | 943 | | | |
| | 337 | 281 | 3.7 | III | 4.93 | 419 | 720 | 1145 | 970 | | | |
| | 287 | 330 | 3.3 | III | 5.79 | 437 | 756 | 1143 | 1010 | | | |
| | 254 | 372 | 3.0 | III | 6.53 | 450 | 785 | 1143 | 1040 | | | |
| | 228 | 415 | 2.6 | III | 7.28 | 466 | 821 | 1141 | 1073 | | | |
| | 211 | 448 | 2.6 | III | 7.85 | 475 | 837 | 1141 | 1087 | | | |
| | 194 | 488 | 2.4 | III | 8.56 | 486 | 864 | 1139 | 1114 | | | |
| | 172 | 550 | 2.2 | III | 9.65 | 502 | 893 | 1139 | 1143 | | | |
| | 155 | 610 | 1.9 | II | 10.70 | 515 | 900 | 1136 | 1175 | | | |
| | 124 | 764 | 1.7 | II | 13.39 | 538 | 900 | 1130 | 1224 | | | |
| | 99 | 954 | 1.4 | II | 16.73 | 495 | 900 | 1118 | 1280 | | | |
| | 88 | 1071 | 1.3 | I | 18.79 | 423 | 900 | 1112 | 1305 | | | |
| | 78 | 1213 | 1.2 | I | 21.28 | 335 | 900 | 1100 | 1332 | | | |
| | 152 | 621 | 3.8 | III | 10.89 | 774 | 1260 | 1683 | 1436 | SK 22 - 90S/4 | 64 | 179 |
| | 136 | 696 | 3.7 | III | 12.20 | 799 | 1260 | 1681 | 1476 | SK 22 - 90SH/4 | | |
| | 113 | 838 | 3.6 | III | 14.69 | 842 | 1260 | 1676 | 1544 | | | |
| | 99 | 955 | 3.1 | III | 16.75 | 873 | 1260 | 1674 | 1591 | | | |
| | 83 | 1142 | 2.2 | III | 20.03 | 896 | 1260 | 1667 | 1629 | | | |
| | 70 | 1354 | 2.1 | III | 23.74 | 938 | 1260 | 1661 | 1692 | | | |
| | 67 | 1410 | 1.5 | II | 24.73 | 941 | 1260 | 1656 | 1694 | | | |
| | 58 | 1642 | 2.0 | III | 28.80 | 983 | 1260 | 1645 | 1762 | | | |
| | 57 | 1671 | 1.5 | II | 29.31 | 981 | 1260 | 1645 | 1755 | | | |
| | 48 | 1978 | 1.5 | II | 34.69 | 950 | 1260 | 1627 | 1827 | | | |
| | 47 | 2027 | 1.4 | II | 35.55 | 862 | 1260 | 1622 | 1823 | | | |
| | 39 | 2442 | 1.2 | I | 42.82 | 698 | 1260 | 1593 | 1881 | | | |
| | 36 | 2617 | 1.0 | I | 45.90 | 515 | 1260 | 1577 | 1881 | | | |
| | 30 | 3152 | 0.9 | * | 55.28 | 250 | 1260 | 1526 | 1931 | | | |

(AGMA Class I = $f_B$ 1.0 - 1.39 II = $f_B$ 1.4 - 1.99 III = $f_B$ ≥ 2.0 * = $f_B$ < 1.0) **(Model Type in blue is an Energy Efficient motor)**


Send Quote Requests to info@automatedpt.com
Call +1(800)985-6929 To Order or Order Online At Nordgearmotors.com

DRIVESYSTEMS

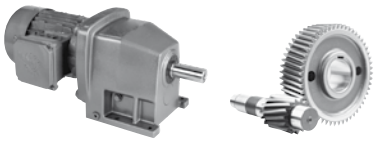

# 1.5 hp Gearmotors



| Motor Power $P_n$ [hp] | Output Speed $n_2$ [rpm] | Output Torque $T_a$ [lb-in] | Service Factor $f_B$ | AGMA Class | Gear Ratio $i_{tot}$ | Standard Bearings $F_{RN}$ OHL [lb] | Standard Bearings $F_{AN}$ Thrust [lb] | Heavy Duty Bearings (VL) $F_{RVL}$ OHL [lb] | Heavy Duty Bearings (VL) $F_{AVL}$ Thrust [lb] | Model Type | Weight [lb] | Dim. Page |
|---|---|---|---|---|---|---|---|---|---|---|---|---|
| 1.5 | 62 | 1515 | 2.5 | III | 26.57 | 1172 | 2025 | 2122 | 2412 | **SK 32 - 90S/4** | 93 | 185 |
| | 53 | 1777 | 2.6 | III | 31.16 | 1226 | 2025 | 2120 | 2509 | **SK 32 - 90SH/4** | | |
| | 50 | 1885 | 1.8 | II | 33.05 | 1235 | 2025 | 2117 | 2531 | | | |
| | 45 | 2123 | 2.5 | III | 37.23 | 1283 | 2025 | 2113 | 2615 | | | |
| | 43 | 2210 | 1.8 | II | 38.76 | 1292 | 2025 | 2111 | 2628 | | | |
| | 36 | 2637 | 2.3 | III | 46.25 | 1361 | 2025 | 2102 | 2752 | | | |
| | 36 | 2641 | 1.8 | II | 46.31 | 1348 | 2025 | 2102 | 2734 | | | |
| | 29 | 3281 | 1.7 | II | 57.53 | 1422 | 2025 | 2084 | 2864 | | | |
| | 26 | 3664 | 1.5 | II | 64.26 | 1456 | 2025 | 2072 | 2930 | | | |
| | 23 | 4149 | 1.2 | I | 72.76 | 1438 | 2025 | 2054 | 2977 | | | |
| | 20 | 4634 | 1.0 | I | 81.27 | 1409 | 2025 | 2034 | 3035 | | | |
| | 19 | 5028 | 0.9 | * | 88.18 | 1384 | 2025 | 2016 | 2993 | **SK 33N - 90S/4** | 112 | 188 |
| | 15 | 6397 | 0.8 | * | 112.18 | 1271 | 2025 | 1942 | 3049 | **SK 33N - 90SH/4** | | |
| | 12 | 7642 | 0.8 | * | 134.02 | 1033 | 2025 | 1852 | 3110 | | | |
| | 27 | 3459 | 2.6 | III | 60.66 | 1843 | 2700 | 2567 | 2646 | **SK 42 - 90S/4** | 126 | 191 |
| | 22 | 4269 | 2.2 | III | 74.87 | 1816 | 2700 | 2549 | 2761 | **SK 42 - 90SH/4** | | |
| | 20 | 4853 | 1.5 | II | 85.10 | 1791 | 2700 | 2531 | 2795 | | | |
| | 16 | 5992 | 1.3 | I | 105.08 | 1735 | 2700 | 2493 | 2896 | | | |
| | 17 | 5415 | 2 | III | 94.96 | 1766 | 2700 | 2513 | 2826 | **SK 43 - 90S/4** | 159 | 194 |
| | 15 | 6131 | 1.6 | II | 107.51 | 1728 | 2700 | 2486 | 2855 | **SK 43 - 90SH/4** | | |
| | 13 | 7378 | 1.5 | II | 129.38 | 1649 | 2700 | 2432 | 2914 | | | |
| | 12 | 8072 | 1.2 | I | 141.55 | 1595 | 2700 | 2399 | 2864 | | | |
| | 9.8 | 9686 | 1.1 | I | 169.86 | 1447 | 2700 | 2300 | 2914 | | | |
| | 9.1 | 10422 | 0.9 | * | 182.76 | 1361 | 2700 | 2248 | 2855 | | | |
| | 8.1 | 11657 | 1.0 | I | 204.42 | 1193 | 2700 | 2149 | 2914 | | | |
| | 7.6 | 12506 | 0.8 | * | 219.32 | 844 | 2700 | 2072 | 2869 | | | |
| | 23 | 4071 | 3.5 | III | 71.39 | 3177 | 5344 | 4451 | 9000 | **SK 52 - 90S/4** | 190 | 197 |
| | 21 | 4480 | 3.2 | III | 78.56 | 3170 | 5344 | 4446 | 9000 | **SK 52 - 90SH/4** | | |
| | 19 | 4957 | 3.1 | III | 86.92 | 3164 | 5344 | 4439 | 9000 | | | |
| | 17 | 5445 | 3.6 | III | 95.49 | 3152 | 5344 | 4433 | 9000 | **SK 53 - 90S/4** | 232 | 200 |
| | 16 | 6037 | 3.3 | III | 105.87 | 3139 | 5344 | 4424 | 9000 | **SK 53 - 90SH/4** | | |
| | 12 | 7946 | 2.5 | III | 139.34 | 3087 | 5344 | 4385 | 9000 | | | |
| | 9.4 | 10106 | 1.7 | II | 177.22 | 3011 | 5344 | 4331 | 9000 | | | |
| | 8.9 | 10590 | 1.5 | II | 185.72 | 2990 | 5344 | 4318 | 9000 | | | |
| | 7 | 13470 | 1.3 | I | 236.21 | 2846 | 5344 | 4219 | 9000 | | | |
| | 6.8 | 14003 | 1.2 | I | 245.56 | 2815 | 5344 | 4199 | 9000 | | | |
| | 5.6 | 16780 | 1.2 | I | 294.26 | 2624 | 5344 | 4073 | 9000 | | | |
| | 4.4 | 21341 | 0.8 | * | 374.25 | 2187 | 5344 | 3805 | 9000 | | | |
| | 31 | 3069 | 4.9 | III | 53.82 | 4590 | 4451 | 6379 | 9153 | **SK 63 - 90S/4** | 311 | 206 |
| | 26 | 3585 | 4.8 | III | 62.87 | 4588 | 4640 | 6377 | 9558 | **SK 63 - 90SH/4** | | |
| | 21 | 4417 | 4.6 | III | 77.46 | 4581 | 4907 | 6372 | 10125 | | | |
| | 19 | 4964 | 4.1 | III | 87.06 | 4574 | 5060 | 6368 | 10125 | | | |
| | 15 | 6152 | 4.1 | III | 107.89 | 4561 | 5326 | 6359 | 10125 | | | |
| | 7.8 | 12209 | 2.6 | III | 214.10 | 4439 | 6233 | 6271 | 10125 | | | |
| | 6.3 | 15130 | 2.1 | III | 265.32 | 4349 | 6518 | 6208 | 10125 | | | |
| | 5.5 | 17127 | 1.7 | II | 300.34 | 4277 | 6656 | 6158 | 10125 | | | |
| | 4.5 | 21225 | 1.3 | I | 372.21 | 4093 | 6905 | 6030 | 10125 | | | |

(AGMA Class I = $f_B$ 1.0 - 1.39 II = $f_B$ 1.4 - 1.99 III = $f_B$ ≥ 2.0 * = $f_B$ < 1.0) **(Model Type in blue is an Energy Efficient motor)**


Send Quote Requests to info@automatedpt.com
Call +1(800)985-6929 To Order or Order Online At Nordgearmotors.com

# 1.5 hp, 2.0 hp Gearmotors

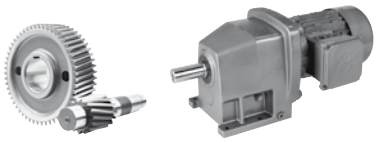

DRIVESYSTEMS

GEARMOTORS

| Motor Power $P_n$ [hp] | Output Speed $n_2$ [rpm] | Output Torque $T_2$ [lb-in] | Service Factor $f_B$ | AGMA Class | Gear Ratio $i_{tot}$ | Standard Bearings $F_{RN}$ OHL [lb] | Standard Bearings $F_{AN}$ Thrust [lb] | Heavy Duty Bearings (VL) $F_{RVL}$ OHL [lb] | Heavy Duty Bearings (VL) $F_{AVL}$ Thrust [lb] | Model Type | Weight [lb] | Dim. Page |
|---|---|---|---|---|---|---|---|---|---|---|---|---|
| 1.5 | 3.9 | 24531 | 1.2 | I | 430.19 | 3906 | 7074 | 5906 | 10125 | **SK 63/22 - 90S/4** | 353 | 234 |
| | 3 | 31503 | 0.9 | * | 552.45 | 3380 | 7270 | 5573 | 10125 | SK 63/22 - 90SH/4 | | |
| | 5.9 | 15928 | 2.8 | III | 279.33 | 6217 | 6221 | 8921 | 11250 | **SK 73/22 - 90S/4** | 531 | 234 |
| | 4.8 | 19725 | 2.2 | III | 345.90 | 6127 | 6487 | 8861 | 11250 | SK 73/22 - 90SH/4 | | |
| | 3.6 | 26099 | 1.7 | II | 457.68 | 5929 | 6818 | 8723 | 11250 | | | |
| | 2.9 | 32319 | 1.4 | II | 566.77 | 5670 | 7004 | 8550 | 11250 | | | |
| | 2.3 | 42061 | 1.1 | I | 737.61 | 5121 | 7187 | 8197 | 11250 | | | |
| | 1.9 | 50646 | 0.9 | * | 888.16 | 4439 | 7256 | 7790 | 11250 | | | |
| | 3.8 | 24967 | 2.8 | III | 437.84 | 10010 | 12285 | 14076 | 14625 | **SK 83/42 - 90S/4** | 825 | 234 |
| | 3.2 | 29960 | 2.4 | III | 525.40 | 9916 | 12809 | 14009 | 14625 | SK 83/42 - 90SH/4 | | |
| | 2.3 | 41327 | 1.7 | II | 724.73 | 9635 | 13680 | 13813 | 14625 | **SK 83/32 - 90S/4** | 792 | 234 |
| | 1.8 | 51350 | 1.4 | II | 900.50 | 9302 | 14238 | 13581 | 14625 | SK 83/32 - 90SH/4 | | |
| | 1.4 | 65890 | 1.1 | I | 1155.49 | 8658 | 14625 | 13149 | 14625 | | | |
| | 1.2 | 78044 | 0.9 | * | 1368.62 | 7945 | 14625 | 12690 | 14625 | | | |
| | 2.2 | 43157 | 2.5 | III | 756.82 | 14735 | 18000 | 20826 | 18000 | **SK 93/42 - 90S/4** | 1219 | 234 |
| | 2 | 46387 | 2.3 | III | 813.46 | 14690 | 18000 | 20795 | 18000 | SK 93/42 - 90SH/4 | | |
| | 1.5 | 62240 | 1.7 | II | 1091.47 | 14418 | 18000 | 20601 | 18000 | | | |
| | 1.3 | 74048 | 1.5 | II | 1298.54 | 14159 | 18000 | 20421 | 18000 | | | |
| | 1.8 | 53806 | 3.3 | III | 943.57 | 22815 | 27000 | 27000 | 27000 | **SK 103/52 - 90S/4** | 1766 | 235 |
| | 1.4 | 65498 | 2.7 | III | 1148.61 | 22703 | 27000 | 27000 | 27000 | SK 103/52 - 90SH/4 | | |
| | 1.2 | 80559 | 2.2 | III | 1412.72 | 22525 | 27000 | 27000 | 27000 | | | |
| 2.0 | 1230 | 103 | 3.2 | III | 1.35 | | 563 | | | **SK 11E - 90L/4** | 44 | 152 |
| | 1078 | 117 | 3.1 | III | 1.54 | | 594 | | | SK 11E - 90LH/4 | | |
| | 917 | 137 | 3.0 | III | 1.81 | | 637 | | | | | |
| | 814 | 155 | 2.8 | III | 2.04 | | 671 | | | | | |
| | 716 | 176 | 2.4 | III | 2.32 | | 704 | | | | | |
| | 587 | 215 | 2.2 | III | 2.83 | | 767 | | | | | |
| | 522 | 241 | 1.5 | II | 3.18 | | 806 | | | | | |
| | 461 | 273 | 1.4 | II | 3.60 | | 846 | | | | | |
| | 563 | 224 | 1.8 | II | 2.95 | 306 | 491 | 434 | 608 | **SK 02 - 90L/4** | 49 | 167 |
| | 491 | 256 | 1.8 | II | 3.38 | 317 | 511 | 446 | 628 | SK 02 - 90LH/4 | | |
| | 427 | 295 | 1.6 | II | 3.89 | 326 | 529 | 459 | 644 | | | |
| | 393 | 320 | 1.4 | II | 4.22 | 338 | 554 | 475 | 666 | | | |
| | 344 | 366 | 1.4 | II | 4.82 | 340 | 556 | 482 | 671 | | | |
| | 298 | 423 | 1.2 | I | 5.57 | 347 | 590 | 502 | 700 | | | |
| | 272 | 463 | 1.1 | I | 6.10 | 367 | 614 | 520 | 722 | | | |
| | 241 | 523 | 1.0 | I | 6.89 | 270 | 612 | 520 | 722 | | | |
| | 213 | 592 | 0.9 | * | 7.80 | 209 | 626 | 529 | 734 | | | |
| | 203 | 621 | 0.9 | * | 8.19 | 216 | 639 | 538 | 745 | | | |
| | 179 | 704 | 0.8 | * | 9.28 | 142 | 650 | 547 | 756 | | | |
| | 167 | 755 | 0.8 | * | 9.95 | 135 | 666 | 558 | 770 | | | |

(AGMA Class I = $f_B$ 1.0 - 1.39 II = $f_B$ 1.4 - 1.99 III = $f_B$ ≥ 2.0 * = $f_B$ < 1.0) **(Model Type in blue is an Energy Efficient motor)**


Send Quote Requests to info@automatedpt.com
Call +1(800)985-6929 To Order or Order Online At Nordgearmotors.com

DRIVESYSTEMS

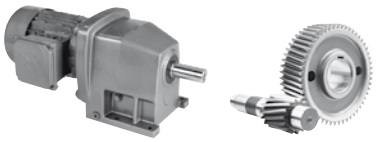

# 2.0 hp Gearmotors



| Motor Power $P_n$ [hp] | Output Speed $n_2$ [rpm] | Output Torque $T_a$ [lb-in] | Service Factor $f_B$ | AGMA Class | Gear Ratio $i_{tot}$ | Standard Bearings $F_{RN}$ OHL [lb] | Standard Bearings $F_{AN}$ Thrust [lb] | Heavy Duty Bearings (VL) $F_{RVL}$ OHL [lb] | Heavy Duty Bearings (VL) $F_{AVL}$ Thrust [lb] | Model Type | Weight [lb] | Dim. Page |
|---|---|---|---|---|---|---|---|---|---|---|---|---|
| **2.0** | 370 | 341 | 2.8 | III | 4.49 | 392 | 650 | 1143 | 920 | **SK 12 - 90L/4** | 53 | 173 |
| | 337 | 374 | 2.7 | III | 4.93 | 405 | 677 | 1143 | 945 | SK 12 - 90LH/4 | | |
| | 287 | 439 | 2.5 | III | 5.79 | 421 | 713 | 1141 | 981 | | | |
| | 254 | 495 | 2.3 | III | 6.53 | 432 | 734 | 1139 | 1006 | | | |
| | 228 | 552 | 2.0 | III | 7.28 | 448 | 767 | 1139 | 1040 | | | |
| | 211 | 596 | 1.9 | II | 7.85 | 452 | 774 | 1136 | 1051 | | | |
| | 194 | 649 | 1.8 | II | 8.56 | 464 | 799 | 1134 | 1073 | | | |
| | 172 | 732 | 1.6 | II | 9.65 | 448 | 821 | 1130 | 1096 | | | |
| | 155 | 812 | 1.5 | II | 10.70 | 437 | 846 | 1127 | 1125 | | | |
| | 124 | 1016 | 1.3 | I | 13.39 | 270 | 873 | 1114 | 1159 | | | |
| | 99 | 1269 | 1.1 | I | 16.73 | 137 | 900 | 1096 | 1204 | | | |
| | 88 | 1425 | 1.0 | I | 18.79 | 20 | 900 | 1082 | 1220 | | | |
| | 78 | 1614 | 0.9 | * | 21.28 | | | 1064 | 1238 | | | |
| | 242 | 520 | 3.1 | III | 6.86 | 664 | 1114 | 1685 | 1251 | **SK 22 - 90L/4** | 73 | 179 |
| | 219 | 574 | 2.9 | III | 7.57 | 677 | 1150 | 1683 | 1276 | SK 22 - 90LH/4 | | |
| | 196 | 643 | 2.8 | III | 8.48 | 700 | 1186 | 1683 | 1312 | | | |
| | 152 | 826 | 2.9 | III | 10.89 | 754 | 1260 | 1679 | 1395 | | | |
| | 136 | 926 | 2.8 | III | 12.20 | 774 | 1260 | 1674 | 1429 | | | |
| | 113 | 1114 | 2.7 | III | 14.69 | 812 | 1260 | 1670 | 1490 | | | |
| | 99 | 1271 | 2.4 | III | 16.75 | 837 | 1260 | 1663 | 1530 | | | |
| | 83 | 1520 | 1.7 | II | 20.03 | 754 | 1260 | 1652 | 1548 | | | |
| | 70 | 1801 | 1.6 | II | 23.74 | 662 | 1260 | 1636 | 1600 | | | |
| | 67 | 1876 | 1.2 | I | 24.73 | 536 | 1260 | 1631 | 1595 | | | |
| | 58 | 2185 | 1.5 | II | 28.80 | 502 | 1260 | 1611 | 1656 | | | |
| | 57 | 2224 | 1.2 | I | 29.31 | 383 | 1260 | 1609 | 1640 | | | |
| | 48 | 2632 | 1.1 | I | 34.69 | 288 | 1260 | 1575 | 1697 | | | |
| | 47 | 2697 | 1.1 | I | 35.55 | 155 | 1260 | 1571 | 1690 | | | |
| | 39 | 3248 | 0.9 | * | 42.82 | | | 1514 | 1726 | | | |
| | 89 | 1416 | 3.0 | III | 18.67 | 1051 | 2025 | 2124 | 2187 | **SK 32 - 90L/4** | 97 | 185 |
| | 80 | 1570 | 2.9 | III | 20.70 | 1078 | 2025 | 2122 | 2239 | SK 32 - 90LH/4 | | |
| | 72 | 1754 | 2.9 | III | 23.12 | 1109 | 2025 | 2120 | 2300 | | | |
| | 62 | 2016 | 1.9 | II | 26.57 | 1123 | 2025 | 2115 | 2327 | | | |
| | 53 | 2364 | 1.9 | II | 31.16 | 1170 | 2025 | 2108 | 2410 | | | |
| | 50 | 2507 | 1.3 | I | 33.05 | 1175 | 2025 | 2104 | 2428 | | | |
| | 45 | 2824 | 1.8 | II | 37.23 | 1220 | 2025 | 2097 | 2504 | | | |
| | 43 | 2940 | 1.3 | I | 38.76 | 1220 | 2025 | 2095 | 2504 | | | |
| | 36 | 3509 | 1.7 | II | 46.25 | 1280 | 2025 | 2077 | 2615 | | | |
| | 36 | 3513 | 1.3 | I | 46.31 | 1267 | 2025 | 2077 | 2590 | | | |
| | 29 | 4364 | 1.2 | I | 57.53 | 1330 | 2025 | 2045 | 2696 | | | |
| | 26 | 4875 | 1.2 | I | 64.26 | 1352 | 2025 | 2023 | 2743 | | | |
| | 54 | 2311 | 3.1 | III | 30.46 | 1631 | 2700 | 2588 | 2225 | **SK 42 - 90L/4** | 130 | 191 |
| | 27 | 4602 | 1.9 | II | 60.66 | 1802 | 2700 | 2540 | 2502 | SK 42 - 90LH/4 | | |
| | 22 | 5680 | 1.7 | II | 74.87 | 1753 | 2700 | 2504 | 2581 | | | |
| | 20 | 6456 | 1.1 | I | 85.10 | 1710 | 2700 | 2475 | 2588 | | | |
| | 16 | 7972 | 1.0 | I | 105.08 | 1604 | 2700 | 2403 | 2644 | | | |

(AGMA Class I = $f_B$ 1.0 - 1.39 II = $f_B$ 1.4 - 1.99 III = $f_B$ ≥ 2.0 * = $f_B$ < 1.0) **(Model Type in blue is an Energy Efficient motor)**


Send Quote Requests to info@automatedpt.com
Call +1(800)985-6929 To Order or Order Online At Nordgearmotors.com

# 2.0 hp Gearmotors

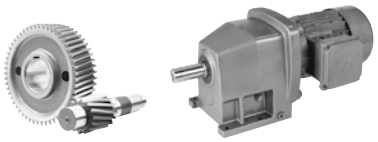

DRIVESYSTEMS

GEARMOTORS

| Motor Power $P_n$ [hp] | Output Speed $n_2$ [rpm] | Output Torque $T_2$ [lb-in] | Service Factor $f_B$ | AGMA Class | Gear Ratio $i_{tot}$ | Standard Bearings $F_{RN}$ OHL [lb] | Standard Bearings $F_{AN}$ Thrust [lb] | Heavy Duty Bearings (VL) $F_{RVL}$ OHL [lb] | Heavy Duty Bearings (VL) $F_{AVL}$ Thrust [lb] | Model Type | Weight [lb] | Dim. Page |
|---|---|---|---|---|---|---|---|---|---|---|---|---|
| 2.0 | 41 | 3109 | 2.8 | III | 40.98 | 1748 | 2700 | 2576 | 2340 | **SK 43 - 90L/4** | 163 | 194 |
| | 34 | 3684 | 2.5 | III | 48.56 | 1802 | 2700 | 2563 | 2381 | SK 43 - 90LH/4 | | |
| | 28 | 4420 | 2.3 | III | 58.27 | 1809 | 2700 | 2545 | 2464 | | | |
| | 24 | 5319 | 2.1 | III | 70.12 | 1771 | 2700 | 2518 | 2527 | | | |
| | 21 | 6066 | 1.8 | II | 79.96 | 1733 | 2700 | 2491 | 2561 | | | |
| | 17 | 7204 | 1.5 | II | 94.96 | 1661 | 2700 | 2441 | 2588 | | | |
| | 15 | 8156 | 1.2 | I | 107.51 | 1589 | 2700 | 2392 | 2581 | | | |
| | 13 | 9815 | 1.1 | I | 129.38 | 1229 | 2700 | 2291 | 2585 | | | |
| | 12 | 10738 | 0.9 | * | 141.55 | 529 | 2700 | 2225 | 2491 | | | |
| | 9.8 | 12886 | 0.8 | * | 169.86 | | | 2034 | 2480 | | | |
| | 23 | 5416 | 2.6 | III | 71.39 | 3155 | 5344 | 4433 | 9000 | **SK 52 - 90L/4** | 194 | 197 |
| | 21 | 5960 | 2.4 | III | 78.56 | 3141 | 5344 | 4424 | 9000 | SK 52 - 90LH/4 | | |
| | 19 | 6594 | 2.3 | III | 86.92 | 3125 | 5344 | 4412 | 9000 | | | |
| | 16 | 8032 | 2.5 | III | 105.87 | 3085 | 5344 | 4385 | 9000 | **SK 53 - 90L/4** | 236 | 200 |
| | 12 | 10571 | 1.9 | II | 139.34 | 2990 | 5344 | 4318 | 9000 | SK 53 - 90LH/4 | | |
| | 9.4 | 13444 | 1.3 | I | 177.22 | 2849 | 5344 | 4221 | 9000 | | | |
| | 8.9 | 14089 | 1.1 | I | 185.72 | 2810 | 5344 | 4194 | 9000 | | | |
| | 7 | 17919 | 0.9 | * | 236.21 | 2531 | 5344 | 4014 | 9000 | | | |
| | 6.8 | 18629 | 0.9 | * | 245.56 | 2468 | 5344 | 3976 | 9000 | | | |
| | 5.6 | 22323 | 0.9 | * | 294.26 | 2066 | 5344 | 3737 | 9000 | | | |
| | 7.8 | 16242 | 2.0 | III | 214.10 | 4311 | 5969 | 6181 | 10125 | **SK 63 - 90L/4** | 315 | 206 |
| | 6.3 | 20128 | 1.6 | II | 265.32 | 4147 | 6172 | 6068 | 10125 | SK 63 - 90LH/4 | | |
| | 5.5 | 22784 | 1.2 | I | 300.34 | 4010 | 6282 | 5974 | 10125 | | | |
| | 4.5 | 28237 | 1.0 | I | 372.21 | 3652 | 6435 | 5742 | 10125 | | | |
| | 11 | 11630 | 2.4 | III | 153.31 | 4455 | 5598 | 6282 | 10125 | **SK 63/22 - 90L/4** | 357 | 234 |
| | 9.6 | 13113 | 2.2 | III | 172.85 | 4415 | 5733 | 6253 | 10125 | SK 63/22 - 90LH/4 | | |
| | 7.4 | 17067 | 1.7 | II | 224.97 | 4280 | 6017 | 6158 | 10125 | | | |
| | 5.9 | 21448 | 1.3 | I | 282.73 | 4082 | 6233 | 6023 | 10125 | | | |
| | 4.5 | 27939 | 1.0 | I | 368.29 | 3674 | 6426 | 5756 | 10125 | | | |
| | 3.9 | 32635 | 0.9 | * | 430.19 | 3274 | 6518 | 5508 | 10125 | | | |
| | 7.3 | 17200 | 2.6 | III | 226.73 | 6188 | 5733 | 8903 | 11250 | **SK 73/32 - 90L/4** | 560 | 234 |
| | | | | | | | | | | SK 73/32 - 90LH/4 | | |
| | 5.9 | 21191 | 2.1 | III | 279.33 | 6086 | 5938 | 8831 | 11250 | **SK 73/22 - 90L/4** | 536 | 234 |
| | 4.8 | 26241 | 1.7 | II | 345.90 | 5922 | 6122 | 8721 | 11250 | SK 73/22 - 90LH/4 | | |
| | 3.6 | 34721 | 1.3 | I | 457.68 | 5553 | 6323 | 8474 | 11250 | | | |
| | 2.9 | 42996 | 1.0 | I | 566.77 | 5056 | 6415 | 8156 | 11250 | | | |
| | 2.3 | 55957 | 0.8 | * | 737.61 | 3881 | 6415 | 7484 | 11250 | | | |
| | 4.4 | 28448 | 2.5 | III | 374.99 | 9947 | 11504 | 14031 | 14625 | **SK 83/42 - 90L/4** | 829 | 234 |
| | 3.8 | 33215 | 2.1 | III | 437.84 | 9846 | 11880 | 13959 | 14625 | SK 83/42 - 90LH/4 | | |
| | 3.2 | 39858 | 1.8 | II | 525.40 | 9677 | 12305 | 13842 | 14625 | | | |
| | 2.3 | 54980 | 1.3 | I | 724.73 | 9160 | 12996 | 13484 | 14625 | **SK 83/32 - 90L/4** | 796 | 234 |
| | 1.8 | 68314 | 1.0 | I | 900.50 | 8530 | 13397 | 13066 | 14625 | SK 83/32 - 90LH/4 | | |
| | 1.4 | 87658 | 0.8 | * | 1155.49 | 7234 | 13723 | 12258 | 14625 | | | |
| | 3 | 41630 | 2.6 | III | 548.76 | 14756 | 18000 | 20840 | 18000 | **SK 93/42 - 90L/4** | 1224 | 234 |
| | 2.2 | 57414 | 1.9 | II | 756.82 | 14510 | 18000 | 20666 | 18000 | SK 93/42 - 90LH/4 | | |
| | 2 | 61711 | 1.7 | II | 813.46 | 14429 | 18000 | 20610 | 18000 | | | |
| | 1.5 | 82801 | 1.3 | I | 1091.47 | 13934 | 18000 | 20266 | 18000 | | | |
| | 1.3 | 98510 | 1.1 | I | 1298.54 | 13455 | 18000 | 19940 | 18000 | | | |
| | 1.8 | 71581 | 2.5 | III | 943.57 | 22637 | 27000 | 27000 | 27000 | **SK 103/52 - 90L/4** | 1771 | 235 |
| | 1.4 | 87136 | 2.0 | III | 1148.61 | 22435 | 27000 | 27000 | 27000 | SK 103/52 - 90LH/4 | | |
| | 1.2 | 107172 | 1.7 | II | 1412.72 | 22115 | 27000 | 27000 | 27000 | | | |

(AGMA Class I = $f_B$ 1.0 - 1.39 II = $f_B$ 1.4 - 1.99 III = $f_B$ ≥ 2.0 * = $f_B$ < 1.0) **(Model Type in blue is an Energy Efficient motor)**


Send Quote Requests to info@automatedpt.com
Call +1(800)985-6929 To Order or Order Online At Nordgearmotors.com

DRIVESYSTEMS

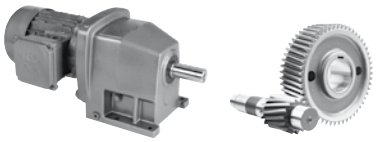

# 3.0 hp Gearmotors



| Motor Power $P_n$ [hp] | Output Speed $n_2$ [rpm] | Output Torque $T_a$ [lb-in] | Service Factor $f_B$ | AGMA Class | Gear Ratio $i_{tot}$ | Standard Bearings $F_{RN}$ OHL [lb] | Standard Bearings $F_{AN}$ Thrust [lb] | Heavy Duty Bearings (VL) $F_{RVL}$ OHL [lb] | Heavy Duty Bearings (VL) $F_{AVL}$ Thrust [lb] | Model Type | Weight [lb] | Dim. Page |
|---|---|---|---|---|---|---|---|---|---|---|---|---|
| 3.0 | 1263 | 150 | 3 | III | 1.35 | | 560 | | | SK 11E - 100L/4<br>SK 11E - 100LH/4 | 53 | 152 |
| | 1107 | 171 | 2.6 | III | 1.54 | | 592 | | | | | |
| | 942 | 201 | 2.4 | III | 1.81 | | 632 | | | | | |
| | 836 | 227 | 2.3 | III | 2.04 | | 664 | | | | | |
| | 735 | 258 | 1.6 | II | 2.32 | | 700 | | | | | |
| | 602 | 314 | 1.5 | II | 2.83 | | 761 | | | | | |
| | 705 | 269 | 2.4 | III | 2.42 | | 909 | | | SK 21E - 100L/4<br>SK 21E - 100LH/4 | 66 | 155 |
| | 629 | 301 | 2.3 | III | 2.71 | | 956 | | | | | |
| | 552 | 343 | 1.6 | II | 3.09 | | 1006 | | | | | |
| | 465 | 408 | 1.5 | II | 3.67 | | 1080 | | | | | |
| | 266 | 711 | 0.8 | * | 6.40 | | 1283 | | | | | |
| | 576 | 329 | 2.8 | III | 2.96 | 331 | 520 | 1143 | 794 | SK 12 - 100L/4<br>SK 12 - 100LH/4 | 62 | 173 |
| | 503 | 376 | 2.6 | III | 3.39 | 342 | 536 | 1143 | 817 | | | |
| | 428 | 442 | 2.3 | III | 3.98 | 353 | 558 | 1141 | 844 | | | |
| | 395 | 480 | 2.1 | III | 4.32 | 365 | 581 | 1141 | 869 | | | |
| | 380 | 499 | 2.1 | III | 4.49 | 317 | 569 | 1139 | 866 | | | |
| | 346 | 547 | 1.9 | II | 4.93 | 342 | 599 | 1139 | 893 | | | |
| | 294 | 643 | 1.7 | II | 5.79 | 279 | 617 | 1134 | 916 | | | |
| | 261 | 725 | 1.5 | II | 6.53 | 223 | 626 | 1132 | 934 | | | |
| | 234 | 808 | 1.4 | II | 7.28 | 234 | 657 | 1127 | 965 | | | |
| | 217 | 872 | 1.3 | I | 7.85 | 149 | 650 | 1123 | 970 | | | |
| | 199 | 950 | 1.2 | I | 8.56 | 131 | 671 | 1118 | 990 | | | |
| | 177 | 1072 | 1.1 | I | 9.65 | 36 | 673 | 1112 | 1001 | | | |
| | 159 | 1188 | 1.0 | I | 10.70 | | | 1103 | 1024 | | | |
| | 127 | 1487 | 0.9 | * | 13.39 | | | 1078 | 1031 | | | |
| | 369 | 513 | 2.6 | III | 4.62 | 558 | 882 | 1685 | 1073 | SK 22 - 100L/4<br>SK 22 - 100LH/4 | 82 | 179 |
| | 329 | 575 | 2.4 | III | 5.18 | 576 | 911 | 1683 | 1098 | | | |
| | 294 | 643 | 3 | III | 5.79 | 601 | 968 | 1683 | 1143 | | | |
| | 262 | 723 | 2.8 | III | 6.51 | 619 | 997 | 1681 | 1172 | | | |
| | 249 | 762 | 3.0 | III | 6.86 | 630 | 1019 | 1679 | 1190 | | | |
| | 225 | 841 | 2.6 | III | 7.57 | 639 | 1037 | 1676 | 1208 | | | |
| | 201 | 942 | 2.4 | III | 8.48 | 657 | 1071 | 1674 | 1233 | | | |
| | 157 | 1209 | 2.3 | III | 10.89 | 700 | 1161 | 1665 | 1307 | | | |
| | 140 | 1355 | 2.1 | III | 12.20 | 653 | 1184 | 1658 | 1330 | | | |
| | 116 | 1631 | 1.8 | II | 14.69 | 545 | 1240 | 1647 | 1379 | | | |
| | 102 | 1860 | 1.6 | II | 16.75 | 416 | 1260 | 1634 | 1400 | | | |
| | 85 | 2224 | 1.1 | I | 20.03 | | | 1609 | 1379 | | | |
| | 72 | 2636 | 1.1 | I | 23.74 | | | 1575 | 1409 | | | |
| | 59 | 3198 | 1.0 | I | 28.80 | | | 1519 | 1436 | | | |
| | 49 | 3852 | 0.8 | * | 34.69 | | | 1438 | 1445 | | | |
| | 117 | 1616 | 3.1 | III | 14.55 | 932 | 1811 | 2122 | 1964 | SK 32 - 100L/4<br>SK 32 - 100LH/4 | 106 | 185 |
| | 113 | 1669 | 2.7 | III | 15.03 | 932 | 1811 | 2122 | 1964 | | | |
| | 105 | 1804 | 3.1 | III | 16.25 | 959 | 1870 | 2120 | 2014 | | | |
| | 102 | 1850 | 2.5 | III | 16.66 | 952 | 1856 | 2117 | 2007 | | | |
| | 91 | 2073 | 2.7 | III | 18.67 | 983 | 1933 | 2113 | 2066 | | | |
| | 82 | 2298 | 2.5 | III | 20.70 | 1004 | 1985 | 2108 | 2106 | | | |
| | 74 | 2567 | 2.2 | III | 23.12 | 1028 | 2025 | 2104 | 2153 | | | |
| | 64 | 2950 | 1.3 | I | 26.57 | 1019 | 2005 | 2095 | 2142 | | | |
| | 55 | 3460 | 1.3 | I | 31.16 | 1053 | 2025 | 2079 | 2205 | | | |
| | 46 | 4134 | 1.3 | I | 37.23 | 1082 | 2025 | 2054 | 2266 | | | |
| | 37 | 5135 | 1.2 | I | 46.25 | 983 | 2025 | 2012 | 2338 | | | |

(AGMA Class I = $f_B$ 1.0 - 1.39 II = $f_B$ 1.4 - 1.99 III = $f_B$ ≥ 2.0 * = $f_B$ < 1.0) **(Model Type in blue is an Energy Efficient motor)**


Send Quote Requests to info@automatedpt.com
Call +1(800)985-6929 To Order or Order Online At Nordgearmotors.com

# 3.0 hp Gearmotors

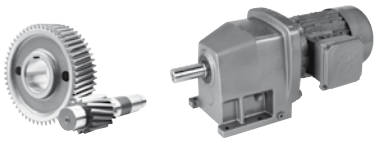

DRIVESYSTEMS

GEARMOTORS

| Motor Power $P_n$ [hp] | Output Speed $n_2$ [rpm] | Output Torque $T_2$ [lb-in] | Service Factor $f_B$ | AGMA Class | Gear Ratio $i_{tot}$ | Standard Bearings $F_{RN}$ OHL [lb] | Standard Bearings $F_{AN}$ Thrust [lb] | Heavy Duty Bearings (VL) $F_{RVL}$ OHL [lb] | Heavy Duty Bearings (VL) $F_{AVL}$ Thrust [lb] | Model Type | Weight [lb] | Dim. Page |
|---|---|---|---|---|---|---|---|---|---|---|---|---|
| 3.0 | 78 | 2428 | 3.4 | III | 21.87 | 1420 | 2700 | 2588 | 1955 | **SK 42 - 100L/4** | 139 | 191 |
| | 70 | 2710 | 2.8 | III | 24.41 | 1436 | 2700 | 2583 | 1962 | SK 42 - 100LH/4 | | |
| | 69 | 2739 | 2.9 | III | 24.67 | 1458 | 2700 | 2581 | 1989 | | | |
| | 58 | 3252 | 2.8 | III | 29.29 | 1505 | 2700 | 2572 | 2027 | | | |
| | 56 | 3382 | 2.8 | III | 30.46 | 1537 | 2700 | 2570 | 2070 | | | |
| | 48 | 3914 | 2.8 | III | 35.25 | 1568 | 2700 | 2558 | 2090 | | | |
| | 41 | 4585 | 2.3 | III | 41.29 | 1625 | 2700 | 2540 | 2142 | | | |
| | 33 | 5661 | 1.7 | II | 50.98 | 1692 | 2700 | 2504 | 2198 | | | |
| | 28 | 6736 | 1.3 | I | 60.66 | 1530 | 2700 | 2462 | 2198 | | | |
| | 23 | 8313 | 1.1 | I | 74.87 | 1127 | 2700 | 2385 | 2219 | | | |
| | 42 | 4550 | 2.0 | III | 40.98 | 1616 | 2700 | 2540 | 2129 | **SK 43 - 100L/4** | 172 | 194 |
| | 21 | 8879 | 1.2 | I | 79.96 | 691 | 2700 | 2351 | 2160 | SK 43 - 100LH/4 | | |
| | 18 | 10544 | 1.0 | I | 94.96 | 11 | 2700 | 2239 | 2115 | | | |
| | 16 | 11938 | 0.8 | * | 107.51 | | | 2124 | 2041 | | | |
| | 13 | 14366 | 0.8 | * | 129.38 | | | 1870 | 1951 | | | |
| | 44 | 4269 | 3.5 | III | 38.45 | 3175 | 5344 | 4448 | 8786 | **SK 52 - 100L/4** | 203 | 197 |
| | 35 | 5430 | 3.1 | III | 48.90 | 3152 | 5344 | 4433 | 9000 | SK 52 - 100LH/4 | | |
| | 32 | 5975 | 2.8 | III | 53.81 | 3141 | 5344 | 4424 | 9000 | | | |
| | 29 | 6611 | 2.5 | III | 59.54 | 3125 | 5344 | 4412 | 9000 | | | |
| | 24 | 7927 | 1.8 | II | 71.39 | 3089 | 5344 | 4388 | 9000 | | | |
| | 22 | 8723 | 1.6 | II | 78.56 | 3062 | 5344 | 4367 | 9000 | | | |
| | 20 | 9651 | 1.6 | II | 86.92 | 3029 | 5344 | 4345 | 9000 | | | |
| | 18 | 10603 | 1.9 | II | 95.49 | 2990 | 5344 | 4318 | 9000 | **SK 53 - 100L/4** | 245 | 200 |
| | 16 | 11756 | 1.7 | II | 105.87 | 2936 | 5344 | 4282 | 9000 | SK 53 - 100LH/4 | | |
| | 12 | 15472 | 1.3 | I | 139.34 | 2720 | 5344 | 4136 | 9000 | | | |
| | 9.6 | 19678 | 0.9 | * | 177.22 | 2369 | 5344 | 3913 | 9000 | | | |
| | 9.2 | 20622 | 0.8 | * | 185.72 | 2268 | 5344 | 3854 | 9000 | | | |
| | 27 | 6981 | 3.8 | III | 62.87 | 4550 | 4372 | 6350 | 9227 | **SK 63 - 100L/4** | 324 | 206 |
| | 22 | 8601 | 3.4 | III | 77.46 | 4520 | 4581 | 6329 | 9713 | SK 63 - 100LH/4 | | |
| | 20 | 9667 | 2.9 | III | 87.06 | 4500 | 4691 | 6316 | 10015 | | | |
| | 16 | 11980 | 2.7 | III | 107.89 | 4446 | 4892 | 6275 | 10125 | | | |
| | 12 | 16179 | 2.0 | III | 145.71 | 4313 | 5159 | 6183 | 10125 | | | |
| | 9.4 | 20050 | 1.6 | II | 180.57 | 4149 | 5317 | 6071 | 10125 | | | |
| | 8 | 23773 | 1.4 | II | 214.10 | 3953 | 5405 | 5938 | 10125 | | | |
| | 6.4 | 29461 | 1.1 | I | 265.32 | 3557 | 5490 | 5681 | 10125 | | | |
| | 14 | 13814 | 3.1 | III | 124.41 | 6257 | 4775 | 8951 | 11250 | **SK 73 - 100L/4** | 503 | 212 |
| | 10 | 18436 | 2.7 | III | 166.03 | 6158 | 5011 | 8883 | 11250 | SK 73 - 100LH/4 | | |
| | 8.3 | 22830 | 2.1 | III | 205.61 | 6037 | 5182 | 8798 | 11250 | | | |
| | 7.5 | 25176 | 1.8 | II | 226.73 | 5960 | 5231 | 8746 | 11250 | **SK 73/32 - 100L/4** | 569 | 234 |
| | | | | | | | | | | SK 73/32 - 100LH/4 | | |
| | 6.1 | 31016 | 1.4 | II | 279.33 | 5731 | 5342 | 8591 | 11250 | **SK 73/22 - 100L/4** | 545 | 234 |
| | 4.9 | 38408 | 1.2 | I | 345.90 | 5351 | 5393 | 8343 | 11250 | SK 73/22 - 100LH/4 | | |
| | 3.7 | 50820 | 0.9 | * | 457.68 | 4421 | 5369 | 7778 | 11250 | | | |
| | 7.2 | 26196 | 2.7 | III | 235.92 | 9988 | 9846 | 14060 | 14625 | **SK 83/42 - 100L/4** | 838 | 234 |
| | 6.2 | 30600 | 2.3 | III | 275.58 | 9902 | 10152 | 14000 | 14625 | SK 83/42 - 100LH/4 | | |
| | 4.5 | 41638 | 1.7 | II | 374.99 | 9626 | 10737 | 13806 | 14625 | | | |
| | 3.9 | 48617 | 1.5 | II | 437.84 | 9401 | 10998 | 13651 | 14625 | | | |
| | 3.2 | 58339 | 1.2 | I | 525.40 | 9018 | 11268 | 13390 | 14625 | | | |

(AGMA Class I = $f_B$ 1.0 - 1.39 II = $f_B$ 1.4 - 1.99 III = $f_B$ ≥ 2.0 * = $f_B$ < 1.0) **(Model Type in blue is an Energy Efficient motor)**


Send Quote Requests to info@automatedpt.com
Call +1(800)985-6929 To Order or Order Online At Nordgearmotors.com

DRIVESYSTEMS

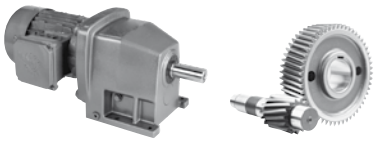

# 3.0 hp, 5.0 hp Gearmotors



| Motor Power $P_n$ [hp] | Output Speed $n_2$ [rpm] | Output Torque $T_a$ [lb-in] | Service Factor $f_B$ | AGMA Class | Gear Ratio $i_{tot}$ | Standard Bearings $F_{RN}$ OHL [lb] | Standard Bearings $F_{AN}$ Thrust [lb] | Heavy Duty Bearings (VL) $F_{RVL}$ OHL [lb] | Heavy Duty Bearings (VL) $F_{AVL}$ Thrust [lb] | Model Type | Weight [lb] | Dim. Page |
|---|---|---|---|---|---|---|---|---|---|---|---|---|
| 3.0 | 5.1 | 36978 | 2.9 | III | 333.02 | 14812 | 17903 | 20880 | 18000 | SK 93/42 - 100L/4 | 1233 | 234 |
| | 3.7 | 50778 | 2.1 | III | 457.30 | 14623 | 18000 | 20747 | 18000 | SK 93/42 - 100LH/4 | | |
| | 3.1 | 60933 | 1.8 | II | 548.76 | 14443 | 18000 | 20619 | 18000 | | | |
| | 2.3 | 84036 | 1.3 | I | 756.82 | 13898 | 18000 | 20243 | 18000 | | | |
| | 2.1 | 90325 | 1.2 | I | 813.46 | 13716 | 18000 | 20117 | 18000 | | | |
| | 1.6 | 121194 | 0.9 | * | 1091.47 | 12573 | 18000 | 19355 | 18000 | | | |
| | 2.7 | 71321 | 2.5 | III | 642.31 | 22640 | 27000 | 27000 | 27000 | SK 103/52 - 100L/4 | 1779 | 235 |
| | 2.1 | 90668 | 2.0 | III | 816.55 | 22385 | 27000 | 27000 | 27000 | SK 103/52 - 100LH/4 | | |
| | 1.8 | 104772 | 1.7 | II | 943.57 | 22158 | 27000 | 27000 | 27000 | | | |
| | 1.5 | 127539 | 1.4 | II | 1148.61 | 21717 | 27000 | 27000 | 27000 | | | |
| | 1.2 | 156865 | 1.1 | I | 1412.72 | 21002 | 27000 | 27000 | 27000 | | | |
| | 1 | 188955 | 0.9 | * | 1701.72 | 20009 | 27000 | 27000 | 27000 | | | |
| | 0.84 | 226193 | 0.8 | * | 2037.08 | 18542 | 27000 | 27000 | 27000 | | | |
| 5.0 | 1278 | 247 | 1.8 | II | 1.35 | | 565 | | | SK 11E - 100LA/4 | 60 | 152 |
| | 1120 | 281 | 1.6 | II | 1.54 | | 596 | | | SK 11E - 112MH/4 | | |
| | 953 | 331 | 1.5 | II | 1.81 | | 637 | | | | | |
| | 846 | 373 | 1.4 | II | 2.04 | | 671 | | | | | |
| | 744 | 424 | 1.0 | I | 2.32 | | 704 | | | | | |
| | 610 | 517 | 0.9 | * | 2.83 | | 761 | | | | | |
| | 1182 | 267 | 2.0 | III | 1.46 | | 736 | | | SK 21E - 100LA/4 | 73 | 234 |
| | 932 | 338 | 1.7 | II | 1.85 | | 812 | | | SK 21E - 112MH/4 | | |
| | 829 | 380 | 1.6 | II | 2.08 | | 853 | | | | | |
| | 713 | 442 | 1.5 | II | 2.42 | | 907 | | | | | |
| | 637 | 495 | 1.4 | II | 2.71 | | 952 | | | | | |
| | 558 | 565 | 1.0 | I | 3.09 | | 1004 | | | | | |
| | 470 | 671 | 0.9 | * | 3.67 | | 1076 | | | | | |
| | 980 | 322 | 2.2 | III | 1.76 | | 891 | | | SK 31E - 100LA/4 | 84 | 158 |
| | 829 | 380 | 2.1 | III | 2.08 | | 954 | | | SK 31E - 112MH/4 | | |
| | 669 | 472 | 1.9 | II | 2.58 | | 1044 | | | | | |
| | 521 | 605 | 1.5 | II | 3.31 | | 1161 | | | | | |
| | 470 | 671 | 1.5 | II | 3.67 | | 1211 | | | | | |
| | 357 | 883 | 1.0 | I | 4.83 | | 1359 | | | | | |
| | 583 | 541 | 1.7 | II | 2.96 | 126 | 423 | 1105 | 729 | SK 12 - 100LA/4 | 68 | 173 |
| | 509 | 620 | 1.6 | II | 3.39 | 59 | 428 | 1130 | 743 | SK 12 - 112MH/4 | | |
| | 433 | 727 | 1.4 | II | 3.98 | | | 1130 | 758 | | | |
| | 399 | 789 | 1.3 | I | 4.32 | | | 1127 | 783 | | | |
| | 384 | 821 | 1.3 | I | 4.49 | | | 1125 | 767 | | | |
| | 350 | 901 | 1.1 | I | 4.93 | | | 1123 | 790 | | | |
| | 298 | 1058 | 1.0 | I | 5.79 | | | 1112 | 799 | | | |
| | 264 | 1193 | 0.9 | * | 6.53 | | | 1103 | 803 | | | |
| | 237 | 1330 | 0.8 | * | 7.28 | | | 1091 | 828 | | | |
| | 220 | 1435 | 0.8 | * | 7.85 | | | 1082 | 817 | | | |
| | 618 | 510 | 2.0 | III | 2.79 | 461 | 671 | 1555 | 900 | SK 22 - 100LA/4 | 88 | 179 |
| | 489 | 645 | 1.8 | II | 3.53 | 484 | 713 | 1634 | 943 | SK 22 - 112MH/4 | | |
| | 435 | 726 | 1.7 | II | 3.97 | 493 | 729 | 1672 | 963 | | | |
| | 373 | 844 | 1.6 | II | 4.62 | 416 | 752 | 1676 | 988 | | | |
| | 333 | 947 | 1.5 | II | 5.18 | 347 | 765 | 1674 | 1006 | | | |
| | 298 | 1058 | 1.8 | II | 5.79 | 419 | 821 | 1672 | 1049 | | | |
| | 265 | 1190 | 1.7 | II | 6.51 | 333 | 833 | 1665 | 1067 | | | |
| | 251 | 1254 | 1.8 | II | 6.86 | 342 | 857 | 1663 | 1082 | | | |
| | 228 | 1383 | 1.6 | II | 7.57 | 203 | 846 | 1658 | 1085 | | | |
| | 203 | 1550 | 1.5 | II | 8.48 | 79 | 857 | 1649 | 1098 | | | |
| | 158 | 1990 | 1.4 | II | 10.89 | | | 1625 | 1143 | | | |
| | 141 | 2230 | 1.3 | I | 12.20 | | | 1609 | 1150 | | | |
| | 117 | 2685 | 1.1 | I | 14.69 | | | 1571 | 1166 | | | |
| | 103 | 3061 | 1.0 | I | 16.75 | | | 1535 | 1161 | | | |

(AGMA Class I = $f_B$ 1.0 - 1.39 II = $f_B$ 1.4 - 1.99 III = $f_B$ ≥ 2.0 * = $f_B$ < 1.0) (Model Type in blue is an Energy Efficient motor)


Send Quote Requests to info@automatedpt.com
Call +1(800)985-6929 To Order or Order Online At Nordgearmotors.com

# 5.0 hp Gearmotors

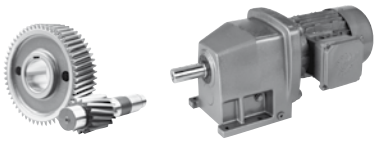

DRIVESYSTEMS

GEARMOTORS

| Motor Power $P_n$ [hp] | Output Speed $n_2$ [rpm] | Output Torque $T_2$ [lb-in] | Service Factor $f_B$ | AGMA Class | Gear Ratio $i_{tot}$ | Standard Bearings $F_{RN}$ OHL [lb] | Standard Bearings $F_{AN}$ Thrust [lb] | Heavy Duty Bearings (VL) $F_{RVL}$ OHL [lb] | Heavy Duty Bearings (VL) $F_{AVL}$ Thrust [lb] | Model Type | Weight [lb] | Dim. Page |
|---|---|---|---|---|---|---|---|---|---|---|---|---|
| 5.0 | 583 | 541 | 2.3 | III | 2.96 | 567 | 956 | 2068 | 1265 | **SK 32 - 100LA/4** | 112 | 185 |
| | 460 | 685 | 2.2 | III | 3.75 | 603 | 1035 | 2126 | 1337 | **SK 32 - 112MH/4** | | |
| | 389 | 810 | 2.1 | III | 4.43 | 628 | 1085 | 2126 | 1391 | | | |
| | 327 | 965 | 2.3 | III | 5.28 | 671 | 1175 | 2126 | 1465 | | | |
| | 314 | 1005 | 1.9 | II | 5.50 | 662 | 1152 | 2126 | 1454 | | | |
| | 303 | 1042 | 2.2 | III | 5.70 | 677 | 1195 | 2126 | 1485 | | | |
| | 256 | 1232 | 2.1 | III | 6.74 | 704 | 1249 | 2126 | 1537 | | | |
| | 245 | 1288 | 1.6 | II | 7.05 | 698 | 1231 | 2126 | 1528 | | | |
| | 218 | 1444 | 2.1 | III | 7.90 | 734 | 1310 | 2124 | 1595 | | | |
| | 206 | 1528 | 1.9 | II | 8.36 | 738 | 1321 | 2122 | 1602 | | | |
| | 176 | 1791 | 1.9 | II | 9.80 | 767 | 1377 | 2120 | 1661 | | | |
| | 147 | 2140 | 1.9 | II | 11.71 | 797 | 1447 | 2113 | 1721 | | | |
| | 119 | 2659 | 1.9 | II | 14.55 | 835 | 1523 | 2102 | 1793 | | | |
| | 115 | 2747 | 1.6 | II | 15.03 | 826 | 1496 | 2099 | 1782 | | | |
| | 106 | 2970 | 1.9 | II | 16.25 | 848 | 1555 | 2093 | 1829 | | | |
| | 104 | 3045 | 1.5 | II | 16.66 | 835 | 1512 | 2090 | 1809 | | | |
| | 92 | 3412 | 1.6 | II | 18.67 | 855 | 1562 | 2081 | 1850 | | | |
| | 83 | 3783 | 1.5 | II | 20.70 | 826 | 1571 | 2068 | 1868 | | | |
| | 75 | 4225 | 1.3 | I | 23.12 | 711 | 1586 | 2052 | 1890 | | | |
| | 237 | 1330 | 2.4 | III | 7.28 | 995 | 1728 | 2599 | 1431 | **SK 42 - 100LA/4** | 146 | 191 |
| | 203 | 1553 | 2.3 | III | 8.50 | 1035 | 1816 | 2597 | 1478 | **SK 42 - 112MH/4** | | |
| | 169 | 1864 | 2.3 | III | 10.20 | 1087 | 1931 | 2594 | 1539 | | | |
| | 140 | 2244 | 2.3 | III | 12.28 | 1139 | 2034 | 2590 | 1600 | | | |
| | 120 | 2628 | 2.3 | III | 14.38 | 1184 | 2140 | 2583 | 1649 | | | |
| | 114 | 2763 | 2.1 | III | 15.12 | 1193 | 2149 | 2581 | 1649 | | | |
| | 97 | 3237 | 2.1 | III | 17.71 | 1235 | 2248 | 2572 | 1694 | | | |
| | 79 | 3997 | 2.1 | III | 21.87 | 1292 | 2367 | 2556 | 1748 | | | |
| | 71 | 4461 | 1.7 | II | 24.41 | 1217 | 2318 | 2543 | 1706 | | | |
| | 70 | 4509 | 1.7 | II | 24.67 | 1307 | 2390 | 2543 | 1753 | | | |
| | 59 | 5353 | 1.7 | II | 29.29 | 1022 | 2396 | 2516 | 1737 | | | |
| | 57 | 5567 | 1.7 | II | 30.46 | 1161 | 2491 | 2509 | 1789 | | | |
| | 49 | 6442 | 1.7 | II | 35.25 | 700 | 2448 | 2475 | 1744 | | | |
| | 42 | 7546 | 1.4 | II | 41.29 | 356 | 2491 | 2426 | 1753 | | | |
| | 34 | 9317 | 1.0 | I | 50.98 | | | 2324 | 1726 | | | |
| | 28 | 11086 | 0.8 | * | 60.66 | | | 2198 | 1620 | | | |
| | 42 | 7489 | 1.2 | I | 40.98 | 288 | 2448 | 2428 | 1728 | **SK 43 - 100LA/4** | 179 | 194 |
| | 36 | 8875 | 1.0 | I | 48.56 | | | 2351 | 1620 | **SK 43 - 112MH/4** | | |
| | 30 | 10649 | 1.0 | I | 58.27 | | | 2232 | 1586 | | | |
| | 25 | 12815 | 0.9 | * | 70.12 | | | 2043 | 1505 | | | |
| | 97 | 3255 | 2.4 | III | 17.81 | 2896 | 5344 | 4457 | 6975 | **SK 52 - 100LA/4** | 209 | 197 |
| | 88 | 3582 | 2.4 | III | 19.60 | 2981 | 5344 | 4455 | 7169 | **SK 52 - 112MH/4** | | |
| | 80 | 3962 | 2.4 | III | 21.68 | 3069 | 5344 | 4451 | 7367 | | | |
| | 72 | 4371 | 2.2 | III | 23.92 | 3152 | 5344 | 4446 | 7558 | | | |
| | 65 | 4836 | 2.2 | III | 26.46 | 3166 | 5344 | 4442 | 7765 | | | |
| | 54 | 5865 | 2.1 | III | 32.09 | 3143 | 5344 | 4426 | 8109 | | | |
| | 53 | 5950 | 1.9 | II | 32.56 | 3141 | 5344 | 4424 | 8188 | | | |
| | 48 | 6585 | 1.9 | II | 36.03 | 3128 | 5344 | 4412 | 8415 | | | |
| | 45 | 7027 | 2.1 | III | 38.45 | 3114 | 5344 | 4406 | 8496 | | | |
| | 35 | 8937 | 1.9 | II | 48.90 | 3056 | 5344 | 4363 | 9000 | | | |
| | 32 | 9834 | 1.7 | II | 53.81 | 3022 | 5344 | 4340 | 9000 | | | |
| | 29 | 10881 | 1.5 | II | 59.54 | 2977 | 5344 | 4309 | 9000 | | | |
| | 24 | 13047 | 1.1 | I | 71.39 | 2871 | 5344 | 4235 | 9000 | | | |
| | 22 | 14357 | 1.0 | I | 78.56 | 2792 | 5344 | 4185 | 9000 | | | |
| | 20 | 15885 | 1.0 | I | 86.92 | 2691 | 5344 | 4118 | 9000 | | | |

(AGMA Class I = $f_B$ 1.0 - 1.39 II = $f_B$ 1.4 - 1.99 III = $f_B$ ≥ 2.0 * = $f_B$ < 1.0) **(Model Type in blue is an Energy Efficient motor)**


Send Quote Requests to info@automatedpt.com
Call +1(800)985-6929 To Order or Order Online At Nordgearmotors.com

DRIVESYSTEMS

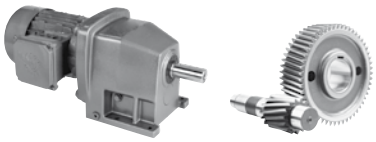

# 5.0 hp Gearmotors



| Motor Power $P_n$ [hp] | Output Speed $n_2$ [rpm] | Output Torque $T_a$ [lb-in] | Service Factor $f_B$ | AGMA Class | Gear Ratio $i_{tot}$ | Standard Bearings $F_{RN}$ OHL [lb] | Standard Bearings $F_{AN}$ Thrust [lb] | Heavy Duty Bearings (VL) $F_{RVL}$ OHL [lb] | Heavy Duty Bearings (VL) $F_{AVL}$ Thrust [lb] | Model Type | Weight [lb] | Dim. Page |
|---|---|---|---|---|---|---|---|---|---|---|---|---|
| 5.0 | 18 | 17451 | 1.1 | I | 95.49 | 2572 | 5344 | 4039 | 9000 | **SK 53 - 100LA/4** | 251 | 200 |
| | 16 | 19348 | 1.0 | I | 105.87 | 2401 | 5344 | 3933 | 9000 | SK 53 - 112MH/4 | | |
| | 12 | 25465 | 0.8 | * | 139.34 | 1564 | 5344 | 3485 | 9000 | | | |
| | 99 | 3174 | 2.5 | III | 17.37 | 4590 | 3058 | 6379 | 6352 | **SK 63 - 100LA/4** | 331 | 206 |
| | 83 | 3796 | 2.5 | III | 20.77 | 4586 | 3204 | 6377 | 6676 | SK 63 - 112MH/4 | | |
| | 78 | 4017 | 2.5 | III | 21.98 | 4583 | 3240 | 6374 | 6761 | | | |
| | 66 | 4803 | 2.5 | III | 26.28 | 4577 | 3389 | 6370 | 7106 | | | |
| | 56 | 5649 | 2.4 | III | 30.91 | 4568 | 3521 | 6363 | 7407 | | | |
| | 48 | 6599 | 2.3 | III | 36.11 | 4554 | 3643 | 6354 | 7711 | | | |
| | 40 | 7937 | 2.4 | III | 43.43 | 4534 | 3785 | 6338 | 8091 | | | |
| | 34 | 9271 | 2.3 | III | 50.73 | 4509 | 3902 | 6320 | 8381 | | | |
| | 32 | 9836 | 2.4 | III | 53.82 | 4496 | 3947 | 6311 | 8516 | | | |
| | 27 | 11490 | 2.3 | III | 62.87 | 4457 | 4055 | 6284 | 8809 | | | |
| | 22 | 14156 | 2.1 | III | 77.46 | 4381 | 4187 | 6230 | 9227 | | | |
| | 20 | 15911 | 1.7 | II | 87.06 | 4322 | 4255 | 6190 | 9452 | | | |
| | 16 | 19717 | 1.6 | II | 107.89 | 4165 | 4352 | 6082 | 9855 | | | |
| | 12 | 26629 | 1.2 | I | 145.71 | 3769 | 4430 | 5816 | 10125 | | | |
| | 9.6 | 33000 | 1.0 | I | 180.57 | 3238 | 4430 | 5488 | 10125 | | | |
| | 8.1 | 39128 | 0.8 | * | 214.10 | 2480 | 4352 | 5076 | 10125 | | | |
| | 19 | 16700 | 2.2 | III | 91.38 | 6199 | 4100 | 8910 | 11250 | **SK 73 - 100LA/4** | 509 | 212 |
| | 17 | 18359 | 1.9 | II | 100.46 | 6161 | 4154 | 8883 | 11250 | SK 73 - 112MH/4 | | |
| | 14 | 22736 | 1.9 | II | 124.41 | 6041 | 4255 | 8800 | 11250 | | | |
| | 10 | 30343 | 1.6 | II | 166.03 | 5760 | 4329 | 8611 | 11250 | | | |
| | 8.4 | 37576 | 1.3 | I | 205.61 | 5400 | 4329 | 8372 | 11250 | | | |
| | 10 | 31293 | 1.4 | II | 171.23 | 5717 | 4329 | 8582 | 11250 | **SK 73/32 - 100LA/4** | 576 | 234 |
| | 7.6 | 41436 | 1.1 | I | 226.73 | 5162 | 4316 | 8222 | 11250 | SK 73/32 - 112MH/4 | | |
| | 28 | 11311 | 2.8 | III | 61.89 | 10177 | 6876 | 14175 | 14625 | **SK 83 - 100LA/4** | 745 | 218 |
| | 25 | 12837 | 2.7 | III | 70.24 | 10163 | 7090 | 14175 | 14625 | SK 83 - 112MH/4 | | |
| | 21 | 14734 | 2.5 | III | 80.62 | 10145 | 7319 | 14173 | 14625 | | | |
| | 13 | 24997 | 2.6 | III | 136.78 | 10008 | 8190 | 14076 | 14625 | | | |
| | 8 | 39586 | 2.0 | III | 216.61 | 9684 | 8845 | 13847 | 14625 | | | |
| | 7.3 | 43115 | 1.6 | II | 235.92 | 9583 | 8960 | 13775 | 14625 | **SK 83/42 - 100LA/4** | 845 | 234 |
| | 6.3 | 50363 | 1.4 | II | 275.58 | 9340 | 9117 | 13606 | 14625 | SK 83/42 - 112MH/4 | | |
| | 4.6 | 68531 | 1.0 | I | 374.99 | 8519 | 9340 | 13057 | 14625 | | | |
| | 3.9 | 80017 | 0.9 | * | 437.84 | 7810 | 9385 | 12607 | 14625 | | | |
| | 9.5 | 33108 | 2.5 | III | 181.16 | 14855 | 14747 | 20909 | 18000 | **SK 93/42 - 100LA/4** | 1239 | 234 |
| | 7.2 | 43813 | 2.5 | III | 239.74 | 14726 | 15723 | 20819 | 18000 | SK 93/42 - 112MH/4 | | |
| | 6 | 52602 | 2.1 | III | 287.83 | 14594 | 16313 | 20725 | 18000 | | | |
| | 5.2 | 60861 | 1.8 | II | 333.02 | 14445 | 16792 | 20621 | 18000 | | | |
| | 3.8 | 83573 | 1.3 | I | 457.30 | 13912 | 17762 | 20252 | 18000 | | | |
| | 3.1 | 100288 | 1.1 | I | 548.76 | 13394 | 18000 | 19899 | 18000 | | | |
| | 2.3 | 138312 | 0.8 | * | 756.82 | 11732 | 18000 | 18819 | 18000 | | | |
| | 5.1 | 62160 | 2.8 | III | 340.13 | 22739 | 25423 | 27000 | 27000 | **SK 103/52 - 100LA/4** | 1786 | 235 |
| | 3.7 | 85494 | 2.1 | III | 467.81 | 22460 | 27000 | 27000 | 27000 | SK 103/52 - 112MH/4 | | |
| | 2.7 | 117385 | 1.5 | II | 642.31 | 21924 | 27000 | 27000 | 27000 | | | |
| | 2.1 | 149228 | 1.2 | I | 816.55 | 21204 | 27000 | 27000 | 27000 | | | |
| | 1.8 | 172441 | 1.0 | I | 943.57 | 20549 | 27000 | 27000 | 27000 | | | |
| | 1.5 | 209913 | 0.8 | * | 1148.61 | 19231 | 27000 | 27000 | 27000 | | | |

(AGMA Class I = $f_B$ 1.0 - 1.39 II = $f_B$ 1.4 - 1.99 III = $f_B$ ≥ 2.0 * = $f_B$ < 1.0) **(Model Type in blue is an Energy Efficient motor)**


Send Quote Requests to info@automatedpt.com
Call +1(800)985-6929 To Order or Order Online At Nordgearmotors.com

# 7.5 hp Gearmotors

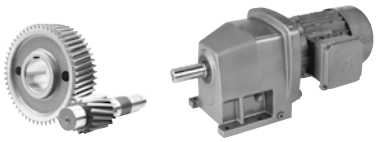

DRIVESYSTEMS

GEARMOTORS

| Motor Power $P_n$ [hp] | Output Speed $n_2$ [rpm] | Output Torque $T_2$ [lb-in] | Service Factor $f_B$ | AGMA Class | Gear Ratio $i_{tot}$ | Standard Bearings $F_{RN}$ OHL [lb] | Standard Bearings $F_{AN}$ Thrust [lb] | Heavy Duty Bearings (VL) $F_{RVL}$ OHL [lb] | Heavy Duty Bearings (VL) $F_{AVL}$ Thrust [lb] | Model Type | Weight [lb] | Dim. Page |
|---|---|---|---|---|---|---|---|---|---|---|---|---|
| 7.5 | 1248 | 379 | 3.3 | III | 1.39 | | 815 | | | SK 31E - 132S/4 | 135 | 158 |
| | 986 | 479 | 2.8 | III | 1.76 | | 896 | | | SK 31E - 132SH/4 | | |
| | 834 | 566 | 2.6 | III | 2.08 | | 961 | | | | | |
| | 672 | 703 | 2.3 | III | 2.58 | | 1051 | | | | | |
| | 524 | 901 | 1.0 | I | 3.31 | | 1166 | | | | | |
| | 473 | 999 | 1.0 | I | 3.67 | | 1222 | | | | | |
| | 563 | 839 | 2.9 | III | 3.08 | | 1289 | | | SK 41E - 132S/4 | 154 | 162 |
| | 507 | 931 | 1.3 | I | 3.42 | | 1346 | | | SK 41E - 132SH/4 | | |
| | 447 | 1057 | 1.2 | I | 3.88 | | 1424 | | | | | |
| | 404 | 1168 | 1.2 | I | 4.29 | | 1483 | | | | | |
| | 329 | 1435 | 1.2 | I | 5.27 | | 1613 | | | | | |
| | 242 | 1955 | 0.9 | * | 7.18 | | 1834 | | | | | |
| | 586 | 806 | 3.4 | III | 2.96 | 538 | 875 | 1994 | 1211 | SK 32 - 132S/4 | 163 | 185 |
| | 463 | 1021 | 3.2 | III | 3.75 | 565 | 927 | 2102 | 1269 | SK 32 - 132SH/4 | | |
| | 392 | 1206 | 2.9 | III | 4.43 | 583 | 965 | 2126 | 1310 | | | |
| | 329 | 1438 | 3.4 | III | 5.28 | 623 | 1046 | 2124 | 1384 | | | |
| | 315 | 1498 | 2.6 | III | 5.50 | 605 | 997 | 2124 | 1357 | | | |
| | 304 | 1552 | 3.2 | III | 5.70 | 628 | 1049 | 2122 | 1395 | | | |
| | 257 | 1835 | 2.9 | III | 6.74 | 644 | 1080 | 2117 | 1433 | | | |
| | 246 | 1920 | 1.1 | I | 7.05 | 626 | 1026 | 2117 | 1404 | | | |
| | 220 | 2151 | 2.7 | III | 7.90 | 664 | 1114 | 2113 | 1476 | | | |
| | 208 | 2276 | 2.3 | III | 8.36 | 659 | 1100 | 2111 | 1469 | | | |
| | 177 | 2669 | 2.1 | III | 9.80 | 675 | 1134 | 2102 | 1508 | | | |
| | 148 | 3189 | 2.0 | III | 11.71 | 542 | 1159 | 2088 | 1548 | | | |
| | 119 | 3962 | 1.5 | II | 14.55 | 356 | 1175 | 2061 | 1589 | | | |
| | 115 | 4093 | 1.1 | I | 15.03 | 180 | 1125 | 2057 | 1559 | | | |
| | 107 | 4425 | 1.3 | I | 16.25 | 214 | 1170 | 2043 | 1600 | | | |
| | 104 | 4537 | 1.0 | I | 16.66 | | | 2039 | 1557 | | | |
| | 93 | 5084 | 1.1 | I | 18.67 | | | 2014 | 1584 | | | |
| | 84 | 5637 | 1.0 | I | 20.70 | | | 1985 | 1575 | | | |
| | 75 | 6296 | 0.9 | * | 23.12 | | | 1946 | 1571 | | | |
| | 238 | 1982 | 3.5 | III | 7.28 | 938 | 1564 | 2592 | 1339 | SK 42 - 132S/4 | 196 | 191 |
| | 204 | 2315 | 3.2 | III | 8.50 | 970 | 1627 | 2588 | 1368 | SK 42 - 132SH/4 | | |
| | 170 | 2778 | 3.2 | III | 10.20 | 1010 | 1708 | 2581 | 1415 | | | |
| | 141 | 3344 | 3.2 | III | 12.28 | 1049 | 1782 | 2570 | 1449 | | | |
| | 121 | 3916 | 2.6 | III | 14.38 | 1078 | 1836 | 2558 | 1474 | | | |
| | 115 | 4117 | 2.7 | III | 15.12 | 961 | 1825 | 2552 | 1467 | | | |
| | 98 | 4823 | 2.2 | III | 17.71 | 788 | 1872 | 2534 | 1483 | | | |
| | 97 | 4880 | 1.8 | II | 17.92 | 545 | 1798 | 2531 | 1438 | | | |
| | 81 | 5855 | 1.8 | II | 21.50 | 279 | 1836 | 2498 | 1449 | | | |
| | 79 | 5955 | 1.6 | II | 21.87 | 468 | 1913 | 2493 | 1496 | | | |
| | 71 | 6647 | 1.1 | I | 24.41 | | | 2466 | 1393 | | | |
| | 70 | 6718 | 1.2 | I | 24.67 | 74 | 1872 | 2464 | 1460 | | | |
| | 67 | 7047 | 1.6 | II | 25.88 | | | 2448 | 1429 | | | |
| | 59 | 7976 | 1.1 | I | 29.29 | | | 2403 | 1377 | | | |
| | 57 | 8294 | 1.2 | I | 30.46 | | | 2385 | 1433 | | | |
| | 49 | 9599 | 1.1 | I | 35.25 | | | 2306 | 1321 | | | |
| | 42 | 11244 | 0.9 | * | 41.29 | | | 2185 | 1267 | | | |

(AGMA Class I = $f_B$ 1.0 - 1.39 II = $f_B$ 1.4 - 1.99 III = $f_B$ ≥ 2.0 * = $f_B$ < 1.0) **(Model Type in blue is an Energy Efficient motor)**


Send Quote Requests to info@automatedpt.com
Call +1(800)985-6929 To Order or Order Online At Nordgearmotors.com

NORD DRIVESYSTEMS

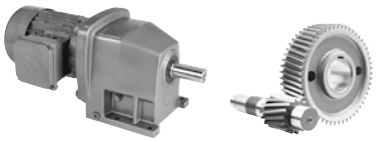

# 7.5 hp Gearmotors



| Motor Power $P_n$ [hp] | Output Speed $n_2$ [rpm] | Output Torque $T_a$ [lb-in] | Service Factor $f_B$ | AGMA Class | Gear Ratio $i_{tot}$ | Standard Bearings $F_{RN}$ OHL [lb] | Standard Bearings $F_{AN}$ Thrust [lb] | Heavy Duty Bearings (VL) $F_{RVL}$ OHL [lb] | Heavy Duty Bearings (VL) $F_{AVL}$ Thrust [lb] | Model Type | Weight [lb] | Dim. Page |
|---|---|---|---|---|---|---|---|---|---|---|---|---|
| 7.5 | 97 | 4850 | 3.4 | III | 17.81 | 2801 | 5344 | 4442 | 6820 | **SK 52 - 132S/4** | 260 | 197 |
| | 89 | 5337 | 3.2 | III | 19.60 | 2880 | 5344 | 4435 | 6998 | SK 52 - 132SH/4 | | |
| | 80 | 5904 | 2.8 | III | 21.68 | 2957 | 5344 | 4426 | 7191 | | | |
| | 73 | 6514 | 2.6 | III | 23.92 | 3035 | 5344 | 4415 | 7367 | | | |
| | 72 | 6554 | 2.3 | III | 24.07 | 2990 | 5344 | 4415 | 7306 | | | |
| | 66 | 7205 | 2.3 | III | 26.46 | 3110 | 5344 | 4401 | 7544 | | | |
| | 60 | 7856 | 2.3 | III | 28.85 | 3092 | 5344 | 4388 | 7668 | | | |
| | 54 | 8738 | 1.4 | II | 32.09 | 3062 | 5344 | 4367 | 7828 | | | |
| | 53 | 8866 | 1.3 | I | 32.56 | 3058 | 5344 | 4365 | 7918 | | | |
| | 47 | 9991 | 1.7 | II | 36.69 | 3015 | 5344 | 4336 | 8123 | | | |
| | 48 | 9811 | 1.3 | I | 36.03 | 3022 | 5344 | 4340 | 8109 | | | |
| | 45 | 10470 | 1.4 | II | 38.45 | 2995 | 5344 | 4322 | 8161 | | | |
| | 43 | 10993 | 1.5 | II | 40.37 | 2972 | 5344 | 4307 | 8321 | | | |
| | 35 | 13316 | 1.3 | I | 48.90 | 2855 | 5344 | 4226 | 8660 | | | |
| | 32 | 14653 | 1.2 | I | 53.81 | 2774 | 5344 | 4172 | 8843 | | | |
| | 29 | 16213 | 1.0 | I | 59.54 | 2669 | 5344 | 4102 | 9000 | | | |
| | 47 | 10089 | 2.6 | III | 37.05 | 4491 | 3443 | 6309 | 7490 | **SK 62 - 132S/4** | 386 | 203 |
| | 36 | 13270 | 1.7 | II | 48.73 | 4410 | 3591 | 6251 | 7949 | SK 62 - 132SH/4 | | |
| | 56 | 8417 | 3.5 | III | 30.91 | 4525 | 3335 | 6332 | 7175 | **SK 63 - 132S/4** | 381 | 206 |
| | 48 | 9833 | 3.2 | III | 36.11 | 4496 | 3422 | 6311 | 7432 | SK 63 - 132SH/4 | | |
| | 40 | 11826 | 2.8 | III | 43.43 | 4448 | 3517 | 6280 | 7747 | | | |
| | 34 | 13814 | 2.4 | III | 50.73 | 4392 | 3591 | 6239 | 8015 | | | |
| | 32 | 14656 | 2.2 | III | 53.82 | 4365 | 3618 | 6219 | 8091 | | | |
| | 28 | 17120 | 1.9 | II | 62.87 | 4277 | 3672 | 6158 | 8341 | | | |
| | 22 | 21093 | 1.6 | II | 77.46 | 4100 | 3713 | 6035 | 8654 | | | |
| | 20 | 23707 | 1.2 | I | 87.06 | 3956 | 3731 | 5940 | 8809 | | | |
| | 16 | 29123 | 1.1 | I | 106.95 | 3584 | 3701 | 5699 | 9052 | | | |
| | 16 | 29379 | 1.1 | I | 107.89 | 3564 | 3695 | 5686 | 9065 | | | |
| | 13 | 36092 | 0.9 | * | 132.54 | 2896 | 3618 | 5292 | 9257 | | | |
| | 12 | 39678 | 0.8 | * | 145.71 | 2392 | 3544 | 5033 | 9333 | | | |
| | 33 | 14225 | 3.5 | III | 52.24 | 6251 | 3454 | 8946 | 9635 | **SK 73 - 132S/4** | 560 | 212 |
| | 29 | 16464 | 3.0 | III | 60.46 | 6206 | 3521 | 8915 | 9947 | SK 73 - 132SH/4 | | |
| | 23 | 20388 | 2.3 | III | 74.87 | 6109 | 3596 | 8847 | 10404 | | | |
| | 19 | 24883 | 1.9 | II | 91.38 | 5972 | 3636 | 8753 | 10814 | | | |
| | 17 | 27356 | 1.3 | I | 100.46 | 5882 | 3647 | 8692 | 11005 | | | |
| | 14 | 33878 | 1.3 | I | 124.41 | 5596 | 3629 | 8501 | 11250 | | | |
| | 14 | 33921 | 1.5 | II | 124.57 | 5594 | 3629 | 8501 | 11250 | | | |
| | 10 | 45211 | 1.1 | I | 166.03 | 4896 | 3499 | 8057 | 11250 | | | |
| | 8.4 | 55989 | 0.8 | * | 205.61 | 3877 | 3312 | 7484 | 11250 | | | |
| | 22 | 21953 | 3.6 | III | 80.62 | 10058 | 6944 | 14110 | 14625 | **SK 83 - 132S/4** | 796 | 218 |
| | 17 | 28320 | 2.9 | III | 1040 | 9950 | 7261 | 14033 | 14625 | SK 83 - 132SH/4 | | |
| | 13 | 37246 | 1.8 | II | 136.78 | 9747 | 7558 | 13889 | 14625 | | | |
| | 11 | 44849 | 1.8 | II | 164.70 | 9529 | 7704 | 13736 | 14625 | | | |
| | 8 | 58984 | 1.3 | I | 216.61 | 8991 | 7855 | 13370 | 14625 | | | |
| | 8.7 | 54562 | 1.3 | I | 200.37 | 9178 | 7830 | 13496 | 14625 | **SK 83/42 - 132S/4** | 895 | 234 |
| | 7.4 | 64243 | 1.1 | I | 235.92 | 8744 | 7868 | 13205 | 14625 | SK 83/42 - 132SH/4 | | |
| | 6.3 | 75042 | 0.9 | * | 275.58 | 8138 | 7855 | 12812 | 14625 | | | |
| | 19 | 25417 | 4.0 | III | 93.34 | 14924 | 12146 | 20959 | 18000 | **SK 93 - 132S/4** | 1191 | 224 |
| | 16 | 29720 | 3.4 | III | 109.14 | 14888 | 12582 | 20934 | 18000 | SK 93 - 132SH/4 | | |
| | 9.2 | 51164 | 2.4 | III | 187.89 | 14616 | 14121 | 20743 | 18000 | | | |

(AGMA Class I = $f_B$ 1.0 - 1.39 II = $f_B$ 1.4 - 1.99 III = $f_B$ ≥ 2.0 * = $f_B$ < 1.0) **(Model Type in blue is an Energy Efficient motor)**


Send Quote Requests to info@automatedpt.com
Call +1(800)985-6929 To Order or Order Online At Nordgearmotors.com

# 7.5 hp, 10 hp Gearmotors

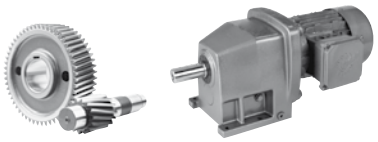

DRIVESYSTEMS

GEARMOTORS

| Motor Power $P_n$ [hp] | Output Speed $n_2$ [rpm] | Output Torque $T_2$ [lb-in] | Service Factor $f_B$ | AGMA Class | Gear Ratio $i_{tot}$ | Standard Bearings $F_{RN}$ OHL [lb] | Standard Bearings $F_{AN}$ Thrust [lb] | Heavy Duty Bearings (VL) $F_{RVL}$ OHL [lb] | Heavy Duty Bearings (VL) $F_{AVL}$ Thrust [lb] | Model Type | Weight [lb] | Dim. Page |
|---|---|---|---|---|---|---|---|---|---|---|---|---|
| 7.5 | 7.2 | 65283 | 1.7 | II | 239.74 | 14355 | 14747 | 20558 | 18000 | **SK 93/42 - 132S/4** | 1290 | 234 |
| | 6 | 78378 | 1.4 | II | 287.83 | 14051 | 15179 | 20347 | 18000 | SK 93/42 - 132SH/4 | | |
| | 5.2 | 90684 | 1.2 | I | 333.02 | 13705 | 15473 | 20111 | 18000 | | | |
| | 3.8 | 124526 | 0.9 | * | 457.30 | 12422 | 15950 | 19258 | 18000 | | | |
| | 8.4 | 56496 | 3.6 | III | 207.47 | 22793 | 21724 | 27000 | 27000 | **SK 103 - 132S/4** | 1674 | 230 |
| | | | | | | | | | | SK 103 - 132SH/4 | | |
| | 7.1 | 66653 | 2.7 | III | 244.77 | 22691 | 22541 | 27000 | 27000 | **SK 103/52 - 132S/4** | 1837 | 235 |
| | 5.8 | 80791 | 2.2 | III | 296.69 | 22523 | 23501 | 27000 | 27000 | SK 103/52 - 132SH/4 | | |
| | 5.1 | 92620 | 1.9 | II | 340.13 | 22356 | 24152 | 27000 | 27000 | | | |
| | 3.7 | 127388 | 1.4 | II | 467.81 | 21719 | 25668 | 27000 | 27000 | | | |
| | 2.7 | 174906 | 1.0 | I | 642.31 | 20473 | 26802 | 27000 | 27000 | | | |
| | 2.1 | 222352 | 0.8 | * | 816.55 | 18711 | 27000 | 27000 | 27000 | | | |
| 10 | 1248 | 505 | 2.5 | III | 1.39 | | 824 | | | **SK 31E - 132M/4** | 159 | 158 |
| | 986 | 640 | 2.1 | III | 1.76 | | 909 | | | SK 31E - 132MH/4 | | |
| | 834 | 756 | 1.9 | II | 2.08 | | 970 | | | | | |
| | 672 | 938 | 1.7 | II | 2.58 | | 1062 | | | | | |
| | 524 | 1203 | 0.8 | * | 3.31 | | 1177 | | | | | |
| | 1230 | 512 | 3.0 | III | 1.41 | | 938 | | | **SK 41E - 132M/4** | 179 | 162 |
| | 1157 | 545 | 3.0 | III | 1.50 | | 963 | | | SK 41E - 132MH/4 | | |
| | 1064 | 592 | 2.9 | III | 1.63 | | 997 | | | | | |
| | 953 | 661 | 2.7 | III | 1.82 | | 1042 | | | | | |
| | 811 | 778 | 2.6 | III | 2.14 | | 1116 | | | | | |
| | 694 | 909 | 2.4 | III | 2.50 | | 1188 | | | | | |
| | 563 | 1119 | 2.2 | III | 3.08 | | 1298 | | | | | |
| | 507 | 1243 | 1.0 | I | 3.42 | | 1352 | | | | | |
| | 447 | 1410 | 0.9 | * | 3.88 | | 1424 | | | | | |
| | 404 | 1559 | 0.9 | * | 4.29 | | 1485 | | | | | |
| | 329 | 1915 | 0.9 | * | 5.27 | | 1616 | | | | | |
| | 586 | 1076 | 2.5 | III | 2.96 | 509 | 797 | 1924 | 1157 | **SK 32 - 132M/4** | 187 | 185 |
| | 463 | 1363 | 2.4 | III | 3.75 | 529 | 828 | 2012 | 1204 | SK 32 - 132MH/4 | | |
| | 392 | 1610 | 2.2 | III | 4.43 | 540 | 839 | 2068 | 1231 | | | |
| | 329 | 1919 | 2.5 | III | 5.28 | 576 | 916 | 2117 | 1303 | | | |
| | 315 | 1999 | 2.0 | III | 5.50 | 488 | 846 | 2115 | 1260 | | | |
| | 304 | 2071 | 2.4 | III | 5.70 | 574 | 907 | 2113 | 1307 | | | |
| | 257 | 2449 | 2.2 | III | 6.74 | 475 | 907 | 2106 | 1325 | | | |
| | 246 | 2562 | 0.8 | * | 7.05 | 227 | 830 | 2104 | 1280 | | | |
| | 220 | 2871 | 2.0 | III | 7.90 | 367 | 918 | 2097 | 1352 | | | |
| | 208 | 3038 | 1.7 | II | 8.36 | 232 | 889 | 2090 | 1339 | | | |
| | 177 | 3561 | 1.6 | II | 9.80 | 72 | 889 | 2075 | 1361 | | | |
| | 148 | 4255 | 1.5 | II | 11.71 | | | 2050 | 1375 | | | |
| | 119 | 5287 | 1.1 | I | 14.55 | | | 2005 | 1384 | | | |
| | 115 | 5462 | 0.8 | * | 15.03 | | | 1996 | 1337 | | | |
| | 107 | 5905 | 1.0 | I | 16.25 | | | 1971 | 1375 | | | |
| | 104 | 6054 | 0.8 | * | 16.66 | | | 1962 | 1312 | | | |
| | 93 | 6785 | 0.8 | * | 18.67 | | | 1915 | 1323 | | | |
| | 84 | 7522 | 0.8 | * | 20.70 | | | 1863 | 1283 | | | |

(AGMA Class I = $f_B$ 1.0 - 1.39 II = $f_B$ 1.4 - 1.99 III = $f_B$ ≥ 2.0 * = $f_B$ < 1.0) **(Model Type in blue is an Energy Efficient motor)**


Send Quote Requests to info@automatedpt.com
Call +1(800)985-6929 To Order or Order Online At Nordgearmotors.com

DRIVESYSTEMS

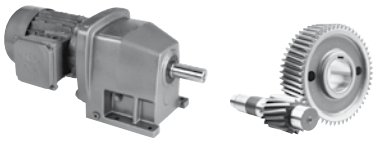

# 10 hp Gearmotors



| Motor Power $P_n$ [hp] | Output Speed $n_2$ [rpm] | Output Torque $T_a$ [lb-in] | Service Factor $f_B$ | AGMA Class | Gear Ratio $i_{tot}$ | Standard Bearings $F_{RN}$ OHL [lb] | Standard Bearings $F_{AN}$ Thrust [lb] | Heavy Duty Bearings (VL) $F_{RVL}$ OHL [lb] | Heavy Duty Bearings (VL) $F_{AVL}$ Thrust [lb] | Model Type | Weight [lb] | Dim. Page |
|---|---|---|---|---|---|---|---|---|---|---|---|---|
| 10 | 302 | 2090 | 3.0 | III | 5.75 | 851 | 1368 | 2572 | 1224 | **SK 42 - 132M/4** | 221 | 191 |
| | 280 | 2249 | 2.7 | III | 6.19 | 857 | 1370 | 2590 | 1229 | SK 42 - 132MH/4 | | |
| | 261 | 2417 | 2.9 | III | 6.65 | 875 | 1409 | 2588 | 1247 | | | |
| | 238 | 2646 | 2.6 | III | 7.28 | 880 | 1409 | 2583 | 1247 | | | |
| | 204 | 3089 | 2.4 | III | 8.50 | 875 | 1440 | 2576 | 1262 | | | |
| | 170 | 3707 | 2.4 | III | 10.20 | 752 | 1499 | 2563 | 1292 | | | |
| | 141 | 4463 | 2.4 | III | 12.28 | 529 | 1517 | 2543 | 1298 | | | |
| | 121 | 5226 | 2.0 | III | 14.38 | 293 | 1532 | 2520 | 1305 | | | |
| | 115 | 5495 | 2.0 | III | 15.12 | 124 | 1512 | 2511 | 1285 | | | |
| | 98 | 6436 | 1.6 | II | 17.71 | | | 2475 | 1274 | | | |
| | 97 | 6512 | 1.4 | II | 17.92 | | | 2473 | 1206 | | | |
| | 81 | 7813 | 1.3 | I | 21.50 | | | 2412 | 1184 | | | |
| | 79 | 7948 | 1.2 | I | 21.87 | | | 2403 | 1244 | | | |
| | 70 | 8965 | 0.9 | * | 24.67 | | | 2347 | 1168 | | | |
| | 67 | 9405 | 1.2 | I | 25.88 | | | 2320 | 1121 | | | |
| | 57 | 11069 | 0.9 | * | 30.46 | | | 2198 | 1087 | | | |
| | 164 | 3845 | 2.9 | III | 10.58 | 2354 | 4514 | 4453 | 5848 | **SK 52 - 132M/4** | 284 | 197 |
| | 129 | 4888 | 2.9 | III | 13.45 | 2522 | 4939 | 4439 | 6235 | SK 52 - 132MH/4 | | |
| | 124 | 5088 | 2.6 | III | 14.00 | 2534 | 4979 | 4437 | 6275 | | | |
| | 97 | 6472 | 2.6 | III | 17.81 | 2709 | 5344 | 4415 | 6680 | | | |
| | 89 | 7123 | 2.4 | III | 19.60 | 2777 | 5344 | 4403 | 6854 | | | |
| | 80 | 7879 | 2.1 | III | 21.68 | 2851 | 5344 | 4388 | 7009 | | | |
| | 73 | 8693 | 1.9 | II | 23.92 | 2905 | 5344 | 4370 | 7169 | | | |
| | 72 | 8747 | 1.7 | II | 24.07 | 2853 | 5344 | 4367 | 7088 | | | |
| | 66 | 9616 | 1.7 | II | 26.46 | 2977 | 5344 | 4345 | 7342 | | | |
| | 60 | 10484 | 1.7 | II | 28.85 | 2975 | 5344 | 4320 | 7400 | | | |
| | 53 | 11832 | 0.9 | * | 32.56 | 2934 | 5344 | 4280 | 7668 | | | |
| | 47 | 13333 | 1.3 | I | 36.69 | 2853 | 5344 | 4226 | 7828 | | | |
| | 48 | 13093 | 0.9 | * | 36.03 | 2867 | 5344 | 4235 | 7828 | | | |
| | 43 | 14670 | 1.2 | I | 40.37 | 2774 | 5344 | 4172 | 7994 | | | |
| | 47 | 13464 | 2.0 | III | 37.05 | 4403 | 3224 | 6246 | 7232 | **SK 62 - 132M/4** | 410 | 203 |
| | | | | | | | | | | SK 62 - 132MH/4 | | |
| | 100 | 6312 | 2.7 | III | 17.37 | 4559 | 2837 | 6356 | 6073 | **SK 63 - 132M/4** | 406 | 206 |
| | 84 | 7548 | 2.7 | III | 20.77 | 4541 | 2952 | 6343 | 6361 | SK 63 - 132MH/4 | | |
| | 79 | 7988 | 2.7 | III | 21.98 | 4532 | 2957 | 6338 | 6424 | | | |
| | 66 | 9550 | 2.7 | III | 26.28 | 4502 | 3074 | 6316 | 6707 | | | |
| | 56 | 11233 | 2.6 | III | 30.91 | 4464 | 3139 | 6289 | 6948 | | | |
| | 48 | 13122 | 2.4 | III | 36.11 | 4412 | 3204 | 6253 | 7175 | | | |
| | 40 | 15783 | 2.1 | III | 43.43 | 4327 | 3256 | 6192 | 7421 | | | |
| | 34 | 18435 | 1.8 | II | 50.73 | 4223 | 3281 | 6120 | 7625 | | | |
| | 32 | 19558 | 1.7 | II | 53.82 | 4174 | 3287 | 6086 | 7700 | | | |
| | 28 | 22847 | 1.4 | II | 62.87 | 4005 | 3287 | 5972 | 7873 | | | |
| | 22 | 28149 | 1.2 | I | 77.46 | 3659 | 3245 | 5747 | 8091 | | | |
| | 20 | 31638 | 0.9 | * | 87.06 | 3368 | 3204 | 5564 | 8170 | | | |
| | 16 | 38866 | 0.8 | * | 106.95 | 2518 | 3049 | 5096 | 8276 | | | |
| | 16 | 39207 | 0.8 | * | 107.89 | 2466 | 3044 | 5069 | 8276 | | | |
| | 52 | 12079 | 3.2 | III | 33.24 | 6287 | 3033 | 8971 | 8433 | **SK 73 - 132M/4** | 584 | 212 |
| | 46 | 13675 | 3.0 | III | 37.63 | 6260 | 3087 | 8953 | 8694 | SK 73 - 132MH/4 | | |
| | 38 | 16593 | 2.9 | III | 45.66 | 6201 | 3152 | 8912 | 9050 | | | |
| | 33 | 18984 | 2.6 | III | 52.24 | 6145 | 3188 | 8874 | 9299 | | | |
| | 29 | 21971 | 2.3 | III | 60.46 | 6064 | 3213 | 8816 | 9558 | | | |
| | 23 | 27208 | 1.7 | II | 74.87 | 5886 | 3218 | 8696 | 9916 | | | |
| | 19 | 33208 | 1.4 | II | 91.38 | 5630 | 3184 | 8523 | 10224 | | | |
| | 17 | 36507 | 0.9 | * | 100.46 | 5459 | 3148 | 8413 | 10355 | | | |
| | 14 | 45211 | 0.9 | * | 124.41 | 4896 | 2999 | 8057 | 10591 | | | |
| | 14 | 45269 | 1.1 | I | 124.57 | 4892 | 2999 | 8055 | 10591 | | | |

(AGMA Class I = $f_B$ 1.0 - 1.39 II = $f_B$ 1.4 - 1.99 III = $f_B$ ≥ 2.0 * = $f_B$ < 1.0) **(Model Type in blue is an Energy Efficient motor)**


Send Quote Requests to info@automatedpt.com
Call +1(800)985-6929 To Order or Order Online At Nordgearmotors.com

# 10 hp, 15 hp Gearmotors

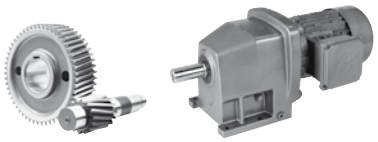

DRIVESYSTEMS

GEARMOTORS

| Motor Power $P_n$ [hp] | Output Speed $n_2$ [rpm] | Output Torque $T_2$ [lb-in] | Service Factor $f_B$ | AGMA Class | Gear Ratio $i_{tot}$ | Standard Bearings $F_{RN}$ OHL [lb] | Standard Bearings $F_{AN}$ Thrust [lb] | Heavy Duty Bearings (VL) $F_{RVL}$ OHL [lb] | Heavy Duty Bearings (VL) $F_{AVL}$ Thrust [lb] | Model Type | Weight [lb] | Dim. Page |
|---|---|---|---|---|---|---|---|---|---|---|---|---|
| 10 | 28 | 22491 | 3.1 | III | 61.89 | 10049 | 6296 | 14103 | 14625 | **SK 83 - 132M/4** SK 83 - 132MH/4 | 820 | 218 |
| | 25 | 25525 | 3.0 | III | 70.24 | 9999 | 6449 | 14069 | 14625 | | | |
| | 22 | 29297 | 2.7 | III | 80.62 | 9929 | 6586 | 14018 | 14625 | | | |
| | 17 | 37794 | 2.1 | III | 104.00 | 9734 | 6788 | 13880 | 14625 | | | |
| | 11 | 59852 | 1.3 | I | 164.70 | 8951 | 6953 | 13345 | 14625 | | | |
| | 14 | 45970 | 1.5 | II | 126.50 | 9491 | 6899 | 13712 | 14625 | **SK 83/42 - 132M/4** SK 83/42 - 132MH/4 | 919 | 234 |
| | 12 | 54125 | 1.3 | I | 148.94 | 9196 | 6944 | 13509 | 14625 | | | |
| | 8.7 | 72815 | 1.0 | I | 200.37 | 8276 | 6921 | 12899 | 14625 | | | |
| | 7.4 | 85734 | 0.8 | * | 235.92 | 7389 | 6788 | 12350 | 14625 | | | |
| | 19 | 33920 | 3.0 | III | 93.34 | 14846 | 11763 | 20905 | 18000 | **SK 93 - 132M/4** SK 93 - 132MH/4 | 1215 | 224 |
| | 16 | 39662 | 2.6 | III | 109.14 | 14780 | 12166 | 20858 | 18000 | | | |
| | 9.2 | 68279 | 1.8 | II | 187.89 | 14292 | 13372 | 20513 | 18000 | | | |
| | 14 | 46334 | 2.3 | III | 127.50 | 14690 | 12542 | 20795 | 18000 | **SK 93/52 - 132M/4** SK 93/52 - 132MH/4 | 1378 | 235 |
| | 11 | 58624 | 1.8 | II | 161.32 | 14488 | 13097 | 20651 | 18000 | | | |
| | 9.6 | 65834 | 1.6 | II | 181.16 | 14344 | 13309 | 20549 | 18000 | **SK 93/42 - 132M/4** SK 93/42 - 132 MH/4 | 1314 | 234 |
| | 7.2 | 87122 | 1.2 | I | 239.74 | 13811 | 13808 | 20183 | 18000 | | | |
| | 6 | 104598 | 1.0 | I | 287.83 | 13241 | 14076 | 19796 | 18000 | | | |
| | 5.2 | 121020 | 0.9 | * | 333.02 | 12580 | 14166 | 19361 | 18000 | | | |
| | 8.4 | 75395 | 2.7 | III | 207.47 | 22590 | 21006 | 27000 | 27000 | **SK 103 - 132M/4** SK 103 - 132MH/4 | 1698 | 230 |
| | 11 | 56193 | 3.1 | III | 154.63 | 22795 | 19701 | 27000 | 27000 | **SK 103/52 - 132M/4** SK 103/52 - 132MH/4 | 1861 | 235 |
| | 9.4 | 67091 | 2.6 | III | 184.62 | 22687 | 20540 | 27000 | 27000 | | | |
| | 7.1 | 88950 | 2.0 | III | 244.77 | 22410 | 21690 | 27000 | 27000 | | | |
| | 5.8 | 107817 | 1.6 | II | 296.69 | 22104 | 22507 | 27000 | 27000 | | | |
| | 5.1 | 123604 | 1.4 | II | 340.13 | 21800 | 22943 | 27000 | 27000 | | | |
| | 3.7 | 170003 | 1.0 | I | 467.81 | 20624 | 23958 | 27000 | 27000 | | | |
| | 2.7 | 233416 | 0.8 | * | 642.31 | 18212 | 24579 | 27000 | 27000 | | | |
| 15 | 1255 | 753 | 2.1 | III | 1.41 | | 945 | | | **SK 41E - 160M/4** SK 41E - 160MH/4 | 218 | 162 |
| | 1180 | 801 | 2.1 | III | 1.50 | | 970 | | | | | |
| | 1086 | 871 | 2.0 | III | 1.63 | | 1004 | | | | | |
| | 973 | 972 | 2.0 | III | 1.82 | | 1049 | | | | | |
| | 827 | 1143 | 1.9 | II | 2.14 | | 1118 | | | | | |
| | 708 | 1336 | 1.8 | II | 2.50 | | 1190 | | | | | |
| | 575 | 1646 | 1.5 | II | 3.08 | | 1298 | | | | | |
| | 859 | 1101 | 3.1 | III | 2.06 | | 1361 | | | **SK 51E - 160M/4** SK 51E - 160MH/4 | 238 | 164 |
| | 708 | 1336 | 2.8 | III | 2.50 | | 1476 | | | | | |
| | 619 | 1528 | 2.6 | III | 2.86 | | 1562 | | | | | |
| | 535 | 1769 | 2.5 | III | 3.31 | | 1658 | | | | | |
| | 438 | 2159 | 1.6 | II | 4.04 | | 1800 | | | | | |
| | 586 | 1614 | 3.3 | III | 3.02 | 668 | 977 | 2068 | 983 | **SK 42 - 160M/4** SK 42 - 160MH/4 | 260 | 191 |
| | 551 | 1715 | 3.2 | III | 3.21 | 675 | 988 | 2088 | 986 | | | |
| | 506 | 1870 | 3.1 | III | 3.50 | 682 | 999 | 2120 | 995 | | | |
| | 455 | 2079 | 3.0 | III | 3.89 | 686 | 1008 | 2144 | 1004 | | | |
| | 370 | 2559 | 3.3 | III | 4.79 | 704 | 1094 | 2270 | 1060 | | | |
| | 386 | 2447 | 2.8 | III | 4.58 | 547 | 1022 | 2185 | 1013 | | | |
| | 347 | 2725 | 3.2 | III | 5.10 | 648 | 1098 | 2286 | 1062 | | | |
| | 331 | 2859 | 2.5 | III | 5.35 | 369 | 1028 | 2216 | 1015 | | | |
| | 308 | 3072 | 3.3 | III | 5.75 | 601 | 1127 | 2340 | 1082 | | | |
| | 286 | 3307 | 2.9 | III | 6.19 | 441 | 1107 | 2329 | 1069 | | | |
| | 266 | 3553 | 2.9 | III | 6.65 | 425 | 1139 | 2369 | 1087 | | | |
| | 243 | 3890 | 2.4 | III | 7.28 | 203 | 1105 | 2349 | 1067 | | | |

(AGMA Class I = $f_B$ 1.0 - 1.39 II = $f_B$ 1.4 - 1.99 III = $f_B$ ≥ 2.0 * = $f_B$ < 1.0) **(Model Type in blue is an Energy Efficient motor)**


Send Quote Requests to info@automatedpt.com
Call +1(800)985-6929 To Order or Order Online At Nordgearmotors.com

DRIVESYSTEMS

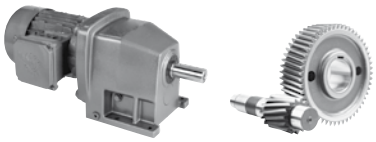

# 15 hp Gearmotors



| Motor Power $P_n$ [hp] | Output Speed $n_2$ [rpm] | Output Torque $T_a$ [lb-in] | Service Factor $f_B$ | AGMA Class | Gear Ratio $i_{tot}$ | Standard Bearings $F_{RN}$ OHL [lb] | Standard Bearings $F_{AN}$ Thrust [lb] | Heavy Duty Bearings (VL) $F_{RVL}$ OHL [lb] | Heavy Duty Bearings (VL) $F_{AVL}$ Thrust [lb] | Model Type | Weight [lb] | Dim. Page |
|---|---|---|---|---|---|---|---|---|---|---|---|---|
| 15 | 208 | 4542 | 2.1 | III | 8.50 | | | 2354 | 1046 | **SK 42 - 160M/4** | 260 | 191 |
| | 174 | 5450 | 1.9 | II | 10.20 | | | 2390 | 1044 | SK 42 - 160MH/4 | | |
| | 144 | 6561 | 1.6 | II | 12.28 | | | 2374 | 1013 | | | |
| | 123 | 7684 | 1.3 | I | 14.38 | | | 2345 | 972 | | | |
| | 117 | 8079 | 1.4 | II | 15.12 | | | 2282 | 934 | | | |
| | 100 | 9463 | 1.1 | I | 17.71 | | | 2207 | 869 | | | |
| | 81 | 11686 | 0.8 | * | 21.87 | | | 2063 | 756 | | | |
| | 276 | 3430 | 3.5 | III | 6.42 | 1960 | 3562 | 4457 | 4973 | **SK 52 - 160M/4** | 324 | 197 |
| | 243 | 3885 | 3.3 | III | 7.27 | 2023 | 3706 | 4453 | 5135 | SK 52 - 160MH/4 | | |
| | 230 | 4114 | 3.4 | III | 7.70 | 2063 | 3791 | 4451 | 5218 | | | |
| | 200 | 4718 | 3.1 | III | 8.83 | 2124 | 3940 | 4442 | 5380 | | | |
| | 167 | 5653 | 2.8 | III | 10.58 | 2230 | 4194 | 4428 | 5634 | | | |
| | 132 | 7187 | 2.3 | III | 13.45 | 2372 | 4552 | 4401 | 5990 | | | |
| | 126 | 7481 | 2.3 | III | 14.00 | 2365 | 4543 | 4397 | 6010 | | | |
| | 99 | 9516 | 1.8 | II | 17.81 | 2511 | 4907 | 4347 | 6365 | | | |
| | 90 | 10473 | 1.6 | II | 19.6 | 2558 | 5042 | 4322 | 6521 | | | |
| | 82 | 11584 | 1.4 | II | 21.68 | 2612 | 5182 | 4286 | 6647 | | | |
| | 74 | 12781 | 1.3 | I | 23.92 | 2642 | 5292 | 4246 | 6755 | | | |
| | 67 | 14138 | 1.2 | I | 26.46 | 2437 | 5344 | 4194 | 6896 | | | |
| | 112 | 8442 | 3.1 | III | 15.80 | 4525 | 2615 | 6332 | 5713 | **SK 62 - 160M/4** | 450 | 203 |
| | 98 | 9693 | 2.8 | III | 18.14 | 4500 | 2660 | 6314 | 5879 | SK 62 - 160MH/4 | | |
| | 48 | 19797 | 1.3 | I | 37.05 | 4163 | 2781 | 6080 | 6676 | | | |
| | 102 | 9281 | 3.0 | III | 17.37 | 4509 | 2615 | 6320 | 5787 | **SK 63 - 160M/4** | 445 | 206 |
| | 85 | 11098 | 2.6 | III | 20.77 | 4469 | 2693 | 6291 | 6035 | SK 63 - 160 MH/4 | | |
| | 81 | 11744 | 2.4 | III | 21.98 | 4451 | 2673 | 6280 | 6062 | | | |
| | 67 | 14042 | 2.0 | III | 26.28 | 4385 | 2752 | 6235 | 6300 | | | |
| | 57 | 16516 | 1.9 | II | 30.91 | 4300 | 2765 | 6174 | 6476 | | | |
| | 49 | 19294 | 1.7 | II | 36.11 | 4185 | 2761 | 6095 | 6622 | | | |
| | 41 | 23206 | 1.4 | II | 43.43 | 3985 | 2729 | 5958 | 6773 | | | |
| | 35 | 27106 | 1.2 | I | 50.73 | 3735 | 2673 | 5796 | 6881 | | | |
| | 33 | 28757 | 1.1 | I | 53.82 | 3614 | 2644 | 5717 | 6903 | | | |
| | 28 | 33593 | 1.0 | I | 62.87 | 3177 | 2538 | 5452 | 6959 | | | |
| | 23 | 41389 | 0.8 | * | 77.46 | 2088 | 2336 | 4896 | 6948 | | | |
| | 62 | 15298 | 2.3 | III | 28.63 | 6230 | 2702 | 8930 | 7785 | **SK 72 - 160M/4** | 602 | 209 |
| | 54 | 17654 | 1.6 | II | 33.04 | 6179 | 2678 | 8897 | 7936 | SK 72 - 160MH/4 | | |
| | 40 | 23355 | 1.5 | II | 43.71 | 6021 | 2745 | 8786 | 8433 | | | |
| | 63 | 15132 | 2.9 | III | 28.32 | 6233 | 2678 | 8933 | 7722 | **SK 73 - 160M/4** | 624 | 212 |
| | 53 | 17761 | 2.5 | III | 33.24 | 6176 | 2702 | 8894 | 7974 | SK 73 - 160MH/4 | | |
| | 47 | 20107 | 2.2 | III | 37.63 | 6116 | 2707 | 8854 | 8154 | | | |
| | 39 | 24397 | 1.9 | II | 45.66 | 5987 | 2702 | 8764 | 8433 | | | |
| | 34 | 27913 | 1.8 | II | 52.24 | 5859 | 2678 | 8678 | 8597 | | | |
| | 29 | 32305 | 1.5 | II | 60.46 | 5672 | 2621 | 8552 | 8780 | | | |
| | 24 | 40005 | 1.2 | I | 74.87 | 5254 | 2482 | 8280 | 8964 | | | |
| | 19 | 48826 | 1.0 | I | 91.38 | 4604 | 2284 | 7884 | 9050 | | | |
| | 55 | 17162 | 3.4 | III | 32.12 | 10121 | 5218 | 14155 | 12553 | **SK 82 - 160M/4** | 842 | 215 |
| | 44 | 21613 | 1.7 | II | 40.45 | 10062 | 5425 | 14112 | 13212 | SK 82 - 160MH/4 | | |
| | 36 | 26086 | 1.8 | II | 48.82 | 9990 | 5591 | 14063 | 13842 | | | |
| | 45 | 20881 | 3.3 | III | 39.08 | 10073 | 5380 | 14121 | 13106 | **SK 83 - 160M/4** | 860 | 218 |
| | 40 | 23713 | 3.3 | III | 44.38 | 10031 | 5495 | 14090 | 13491 | SK 83 - 160MH/4 | | |
| | 34 | 27523 | 2.9 | III | 51.51 | 9963 | 5600 | 14042 | 13930 | | | |
| | 29 | 33069 | 2.4 | III | 61.89 | 9848 | 5717 | 13961 | 14477 | | | |
| | 25 | 37531 | 2.1 | III | 70.24 | 9740 | 5783 | 13885 | 14625 | | | |
| | 22 | 43077 | 1.8 | II | 80.62 | 9583 | 5830 | 13775 | 14625 | | | |
| | 17 | 55570 | 1.5 | II | 104.00 | 9137 | 5830 | 13469 | 14625 | | | |
| | 11 | 88003 | 0.9 | * | 164.70 | 7205 | 5486 | 12240 | 14625 | | | |

(AGMA Class I = $f_B$ 1.0 - 1.39 II = $f_B$ 1.4 - 1.99 III = $f_B$ ≥ 2.0 * = $f_B$ < 1.0) **(Model Type in blue is an Energy Efficient motor)**


Send Quote Requests to info@automatedpt.com
Call +1(800)985-6929 To Order or Order Online At Nordgearmotors.com

# 15 hp, 20 hp Gearmotors

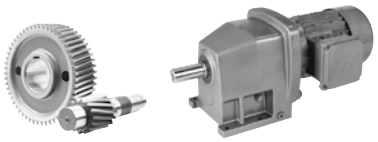

DRIVESYSTEMS

GEARMOTORS

| Motor Power $P_n$ [hp] | Output Speed $n_2$ [rpm] | Output Torque $T_2$ [lb-in] | Service Factor $f_B$ | AGMA Class | Gear Ratio $i_{tot}$ | Standard Bearings $F_{RN}$ OHL [lb] | Standard Bearings $F_{AN}$ Thrust [lb] | Heavy Duty Bearings (VL) $F_{RVL}$ OHL [lb] | Heavy Duty Bearings (VL) $F_{AVL}$ Thrust [lb] | Model Type | Weight [lb] | Dim. Page |
|---|---|---|---|---|---|---|---|---|---|---|---|---|
| 15 | 24 | 38722 | 3.1 | III | 72.47 | 14792 | 10514 | 20867 | 18000 | **SK 93 - 160M/4** | 1255 | 224 |
| | 19 | 49874 | 2.5 | III | 93.34 | 14639 | 11032 | 20756 | 18000 | SK 93 - 160MH/4 | | |
| | 16 | 58316 | 1.8 | II | 109.14 | 14492 | 11264 | 20655 | 18000 | | | |
| | 14 | 65748 | 1.9 | II | 123.05 | 14346 | 11484 | 20552 | 18000 | | | |
| | 9.4 | 100394 | 1.2 | I | 187.89 | 13390 | 11896 | 19897 | 18000 | | | |
| | 9.8 | 96798 | 1.1 | I | 181.16 | 13511 | 11876 | 19978 | 18000 | **SK 93/42 - 160M/4** | 1354 | 234 |
| | 7.4 | 128098 | 0.8 | * | 239.74 | 12254 | 11954 | 19150 | 18000 | SK 93/42 - 160MH/4 | | |
| | 8.5 | 110856 | 1.8 | II | 207.47 | 22050 | 19514 | 27000 | 27000 | **SK 103 - 160M/4** | 1738 | 230 |
| | | | | | | | | | | SK 103 - 160MH/4 | | |
| | 17 | 56296 | 3.1 | III | 105.36 | 22795 | 17219 | 27000 | 27000 | **SK 103/52 - 160M/4** | 1901 | 235 |
| | 14 | 65412 | 2.7 | III | 122.42 | 22705 | 17750 | 27000 | 27000 | SK 103/52 - 160MH/4 | | |
| | 11 | 82622 | 2.1 | III | 154.63 | 22498 | 18567 | 27000 | 27000 | | | |
| | 9.6 | 98647 | 1.8 | II | 184.62 | 22262 | 19141 | 27000 | 27000 | | | |
| | 7.2 | 130786 | 1.4 | II | 244.77 | 21645 | 19924 | 27000 | 27000 | | | |
| | 6 | 158528 | 1.1 | I | 296.69 | 20957 | 20345 | 27000 | 27000 | | | |
| | 5.2 | 181739 | 1.0 | I | 340.13 | 20255 | 20574 | 27000 | 27000 | | | |
| 20 | 1252 | 1007 | 1.6 | II | 1.41 | | 963 | | | **SK 41E - 160L/4** | 256 | 162 |
| | 1177 | 1071 | 1.6 | II | 1.50 | | 988 | | | SK 41E - 160LH/4 | | |
| | 1083 | 1164 | 1.5 | II | 1.63 | | 1019 | | | | | |
| | 970 | 1299 | 1.5 | II | 1.82 | | 1067 | | | | | |
| | 825 | 1528 | 1.4 | II | 2.14 | | 1139 | | | | | |
| | 706 | 1785 | 1.3 | I | 2.50 | | 1211 | | | | | |
| | 573 | 2199 | 1.1 | I | 3.08 | | 1314 | | | | | |
| | 1423 | 885 | 2.7 | III | 1.24 | | 1118 | | | **SK 51E - 160L/4** | 276 | 164 |
| | 1226 | 1028 | 2.6 | III | 1.44 | | 1186 | | | SK 51E - 160LH/4 | | |
| | 1161 | 1085 | 2.5 | III | 1.52 | | 1215 | | | | | |
| | 1076 | 1171 | 2.5 | III | 1.64 | | 1253 | | | | | |
| | 970 | 1299 | 2.3 | III | 1.82 | | 1305 | | | | | |
| | 857 | 1471 | 2.3 | III | 2.06 | | 1375 | | | | | |
| | 706 | 1785 | 2.1 | III | 2.50 | | 1487 | | | | | |
| | 617 | 2042 | 2.0 | III | 2.86 | | 1575 | | | | | |
| | 533 | 2363 | 1.8 | II | 3.31 | | 1667 | | | | | |
| | 437 | 2884 | 1.2 | I | 4.04 | | 1807 | | | | | |
| | 584 | 2156 | 2.5 | III | 3.02 | 457 | 839 | 1931 | 896 | **SK 42 - 160L/4** | 298 | 191 |
| | 550 | 2292 | 2.4 | III | 3.21 | 403 | 839 | 1942 | 896 | SK 42 - 160LH/4 | | |
| | 504 | 2499 | 2.4 | III | 3.50 | 315 | 839 | 1955 | 896 | | | |
| | 454 | 2777 | 2.2 | III | 3.89 | 189 | 839 | 1964 | 896 | | | |
| | 368 | 3420 | 2.5 | III | 4.79 | 155 | 900 | 2075 | 938 | | | |
| | 385 | 3270 | 2.1 | III | 4.58 | | | 1978 | 884 | | | |
| | 346 | 3641 | 2.4 | III | 5.10 | 61 | 891 | 2079 | 934 | | | |
| | 330 | 3820 | 1.9 | II | 5.35 | | | 1969 | 864 | | | |
| | 307 | 4105 | 2.4 | III | 5.75 | | | 2115 | 943 | | | |
| | 285 | 4419 | 2.2 | III | 6.19 | | | 2079 | 916 | | | |
| | 265 | 4748 | 2.2 | III | 6.65 | | | 2111 | 925 | | | |
| | 242 | 5198 | 1.8 | II | 7.28 | | | 2050 | 880 | | | |
| | 208 | 6069 | 1.6 | II | 8.50 | | | 2003 | 835 | | | |
| | 173 | 7282 | 1.4 | II | 10.20 | | | 1969 | 797 | | | |
| | 144 | 8768 | 1.2 | I | 12.28 | | | 1872 | 718 | | | |
| | 123 | 10267 | 1.0 | I | 14.38 | | | 1771 | 641 | | | |
| | 117 | 10795 | 1.0 | I | 15.12 | | | 1539 | 574 | | | |
| | 100 | 12644 | 0.8 | * | 17.71 | | | 990 | 459 | | | |

(AGMA Class I = $f_B$ 1.0 - 1.39 II = $f_B$ 1.4 - 1.99 III = $f_B$ ≥ 2.0 * = $f_B$ < 1.0) **(Model Type in blue is an Energy Efficient motor)**


Send Quote Requests to info@automatedpt.com
Call +1(800)985-6929 To Order or Order Online At Nordgearmotors.com

DRIVESYSTEMS

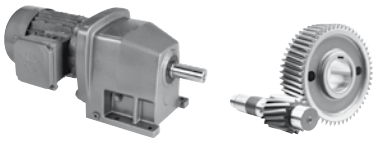

# 20 hp Gearmotors



| Motor Power $P_n$ [hp] | Output Speed $n_2$ [rpm] | Output Torque $T_a$ [lb-in] | Service Factor $f_B$ | AGMA Class | Gear Ratio $i_{tot}$ | Standard Bearings $F_{RN}$ OHL [lb] | Standard Bearings $F_{AN}$ Thrust [lb] | Heavy Duty Bearings (VL) $F_{RVL}$ OHL [lb] | Heavy Duty Bearings (VL) $F_{AVL}$ Thrust [lb] | Model Type | Weight [lb] | Dim. Page |
|---|---|---|---|---|---|---|---|---|---|---|---|---|
| 20 | 433 | 2913 | 2.6 | III | 4.08 | 1667 | 2878 | 4426 | 4318 | **SK 52 - 160L/4** | 362 | 197 |
| | 403 | 3127 | 3.0 | III | 4.38 | 1721 | 2995 | 4460 | 4430 | SK 52 - 160LH/4 | | |
| | 383 | 3291 | 2.5 | III | 4.61 | 1717 | 2995 | 4457 | 4453 | | | |
| | 347 | 3627 | 2.9 | III | 5.08 | 1787 | 3152 | 4455 | 4597 | | | |
| | 315 | 3998 | 2.3 | III | 5.60 | 1802 | 3184 | 4451 | 4664 | | | |
| | 305 | 4134 | 2.8 | III | 5.79 | 1845 | 3281 | 4448 | 4754 | | | |
| | 290 | 4348 | 2.9 | III | 6.09 | 1874 | 3350 | 4446 | 4824 | | | |
| | 275 | 4584 | 2.6 | III | 6.42 | 1890 | 3382 | 4444 | 4871 | | | |
| | 243 | 5191 | 2.5 | III | 7.27 | 1942 | 3503 | 4435 | 5013 | | | |
| | 229 | 5498 | 2.6 | III | 7.70 | 1980 | 3596 | 4430 | 5094 | | | |
| | 200 | 6304 | 2.3 | III | 8.83 | 2025 | 3706 | 4419 | 5234 | | | |
| | 167 | 7554 | 2.1 | III | 10.58 | 2113 | 3908 | 4394 | 5465 | | | |
| | 131 | 9603 | 1.7 | II | 13.45 | 2234 | 4201 | 4345 | 5783 | | | |
| | 126 | 9996 | 1.7 | II | 14.00 | 2212 | 4160 | 4336 | 5774 | | | |
| | 99 | 12716 | 1.3 | I | 17.81 | 1964 | 4451 | 4248 | 6086 | | | |
| | 90 | 13994 | 1.2 | I | 19.60 | 1697 | 4543 | 4158 | 6206 | | | |
| | 81 | 15479 | 1.1 | I | 21.68 | 1377 | 4617 | 3974 | 6325 | | | |
| | 74 | 17078 | 1.0 | I | 23.92 | 817 | 4640 | 3557 | 6386 | | | |
| | 67 | 18892 | 0.9 | * | 26.46 | 369 | 4700 | 3267 | 6489 | | | |
| | 152 | 8275 | 2.7 | III | 11.59 | 4527 | 2340 | 6334 | 5173 | **SK 62 - 160L/4** | 487 | 203 |
| | 127 | 9938 | 2.5 | III | 13.92 | 4493 | 2392 | 6311 | 5357 | SK 62 - 160LH/4 | | |
| | 112 | 11281 | 2.4 | III | 15.80 | 4464 | 2423 | 6289 | 5497 | | | |
| | 97 | 12951 | 2.1 | III | 18.14 | 4419 | 2448 | 6257 | 5632 | | | |
| | 48 | 26453 | 1.0 | I | 37.05 | 3782 | 2351 | 5825 | 6161 | | | |
| | 102 | 12402 | 2.2 | III | 17.37 | 4435 | 2392 | 6269 | 5533 | **SK 63 - 160L/4** | 483 | 206 |
| | 85 | 14829 | 1.9 | II | 20.77 | 4361 | 2444 | 6217 | 5742 | SK 63 - 160LH/4 | | |
| | 80 | 15693 | 1.8 | II | 21.98 | 4331 | 2408 | 6194 | 5742 | | | |
| | 67 | 18763 | 1.5 | II | 26.28 | 4208 | 2435 | 6111 | 5929 | | | |
| | 57 | 22069 | 1.4 | II | 30.91 | 4048 | 2392 | 6001 | 6035 | | | |
| | 49 | 25781 | 1.3 | I | 36.11 | 3827 | 2336 | 5855 | 6111 | | | |
| | 41 | 31008 | 1.1 | I | 43.43 | 3425 | 2223 | 5600 | 6152 | | | |
| | 35 | 36220 | 0.9 | * | 50.73 | 2880 | 2068 | 5283 | 6152 | | | |
| | 33 | 38426 | 0.9 | * | 53.82 | 2583 | 2005 | 5128 | 6152 | | | |
| | 105 | 12038 | 2.6 | III | 16.86 | 6287 | 2363 | 8361 | 6716 | **SK 72 - 160L/4** | 639 | 209 |
| | 81 | 15507 | 2.3 | III | 21.72 | 6226 | 2419 | 8773 | 7070 | SK 72 - 160LH/4 | | |
| | 82 | 15450 | 2.6 | III | 21.64 | 6226 | 2369 | 8690 | 7025 | | | |
| | 62 | 20441 | 1.8 | II | 28.63 | 6107 | 2430 | 8847 | 7441 | | | |
| | 53 | 23590 | 1.2 | I | 33.04 | 6014 | 2347 | 8782 | 7538 | | | |
| | 40 | 31208 | 1.1 | I | 43.71 | 5722 | 2331 | 8586 | 7898 | | | |
| | 98 | 12851 | 2.6 | III | 18.00 | 6275 | 2351 | 8433 | 6770 | **SK 73 - 160L/4** | 662 | 212 |
| | 86 | 14722 | 2.6 | III | 20.62 | 6242 | 2374 | 8642 | 6957 | SK 73 - 160LH/4 | | |
| | 76 | 16664 | 2.5 | III | 23.34 | 6201 | 2392 | 8798 | 7126 | | | |
| | 62 | 20220 | 2.2 | III | 28.32 | 6113 | 2392 | 8852 | 7382 | | | |
| | 53 | 23732 | 1.9 | II | 33.24 | 6010 | 2369 | 8780 | 7551 | | | |
| | 47 | 26867 | 1.6 | II | 37.63 | 5900 | 2336 | 8705 | 7697 | | | |
| | 39 | 32600 | 1.5 | II | 45.66 | 5659 | 2250 | 8543 | 7848 | | | |
| | 34 | 37298 | 1.3 | I | 52.24 | 5416 | 2162 | 8384 | 7936 | | | |
| | 29 | 43167 | 1.2 | I | 60.46 | 5045 | 2018 | 8150 | 8012 | | | |
| | 24 | 53455 | 0.9 | * | 74.87 | 4160 | 1746 | 7632 | 8012 | | | |
| | 66 | 19006 | 3.0 | III | 26.62 | 10098 | 4779 | 14139 | 11660 | **SK 82 - 160L/4** | 880 | 215 |
| | 55 | 22933 | 2.5 | III | 32.12 | 10042 | 4950 | 14099 | 12195 | SK 82 160LH/4 | | |
| | 44 | 28880 | 1.3 | I | 40.45 | 9938 | 5054 | 14024 | 12755 | | | |
| | 36 | 34856 | 1.4 | II | 48.82 | 9808 | 5162 | 13932 | 13298 | | | |

(AGMA Class I = $f_B$ 1.0 - 1.39 II = $f_B$ 1.4 - 1.99 III = $f_B$ ≥ 2.0 * = $f_B$ < 1.0) **(Model Type in blue is an Energy Efficient motor)**


Send Quote Requests to info@automatedpt.com
Call +1(800)985-6929 To Order or Order Online At Nordgearmotors.com

# 20 hp, 25 hp Gearmotors

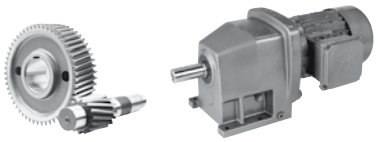

DRIVESYSTEMS

GEARMOTORS

| Motor Power $P_n$ [hp] | Output Speed $n_2$ [rpm] | Output Torque $T_2$ [lb-in] | Service Factor $f_B$ | AGMA Class | Gear Ratio $i_{tot}$ | Standard Bearings $F_{RN}$ OHL [lb] | Standard Bearings $F_{AN}$ Thrust [lb] | Heavy Duty Bearings (VL) $F_{RVL}$ OHL [lb] | Heavy Duty Bearings (VL) $F_{AVL}$ Thrust [lb] | Model Type | Weight [lb] | Dim. Page |
|---|---|---|---|---|---|---|---|---|---|---|---|---|
| 20 | 54 | 23218 | 2.7 | III | 32.52 | 10037 | 4925 | 14096 | 12195 | **SK 83 - 160L/4** | 897 | 218 |
| | 45 | 27902 | 2.5 | III | 39.08 | 9956 | 5038 | 14038 | 12674 | **SK 83 - 160LH/4** | | |
| | 40 | 31686 | 2.5 | III | 44.38 | 9880 | 5103 | 13984 | 13025 | | | |
| | 34 | 36777 | 2.1 | III | 51.51 | 9758 | 5162 | 13898 | 13363 | | | |
| | 29 | 44188 | 1.8 | II | 61.89 | 9549 | 5168 | 13752 | 13775 | | | |
| | 25 | 50149 | 1.6 | II | 70.24 | 9347 | 5162 | 13613 | 14020 | | | |
| | 22 | 57560 | 1.4 | II | 80.62 | 9052 | 5103 | 13412 | 14294 | | | |
| | 17 | 74253 | 1.1 | I | 104.00 | 8188 | 4903 | 12843 | 14625 | | | |
| | 38 | 33250 | 3.1 | III | 46.57 | 14852 | 9248 | 20909 | 18000 | **SK 93 - 160L/4** | 1292 | 224 |
| | 33 | 38412 | 2.8 | III | 53.80 | 14796 | 9504 | 20869 | 18000 | **SK 93 - 160LH/4** | | |
| | 29 | 44002 | 2.6 | III | 61.63 | 14724 | 9720 | 20817 | 18000 | | | |
| | 24 | 51741 | 2.3 | III | 72.47 | 14607 | 9972 | 20736 | 18000 | | | |
| | 19 | 66642 | 1.9 | II | 93.34 | 14328 | 10280 | 20538 | 18000 | | | |
| | 16 | 77923 | 1.3 | I | 109.14 | 14063 | 10429 | 20356 | 18000 | | | |
| | 14 | 87854 | 1.4 | II | 123.05 | 13790 | 10514 | 20167 | 18000 | | | |
| | 9.4 | 134148 | 0.9 | * | 187.89 | 11952 | 10481 | 18959 | 18000 | | | |
| | 22 | 58117 | 2.7 | III | 81.40 | 22777 | 15714 | 27000 | 26807 | **SK 103 - 160L/4** | 1775 | 230 |
| | 13 | 97464 | 2.1 | III | 136.51 | 22280 | 17219 | 27000 | 27000 | **SK 103 - 160LH/4** | | |
| | 8.5 | 148127 | 1.4 | II | 207.47 | 21233 | 18068 | 27000 | 27000 | | | |
| | 17 | 75224 | 2.4 | III | 105.36 | 22592 | 16490 | 27000 | 27000 | **SK 103/52 - 160L/4** | 1938 | 235 |
| | 14 | 87404 | 2.0 | III | 122.42 | 22433 | 16918 | 27000 | 27000 | **SK 103/52 - 160MH/4** | | |
| | 11 | 110401 | 1.6 | II | 154.63 | 22057 | 17525 | 27000 | 27000 | | | |
| | 9.6 | 131813 | 1.3 | I | 184.62 | 21623 | 17865 | 27000 | 27000 | | | |
| | 7.2 | 174758 | 1.0 | I | 244.77 | 20477 | 18270 | 27000 | 27000 | | | |
| | 5.9 | 211828 | 0.8 | * | 296.69 | 19154 | 18360 | 27000 | 27000 | | | |
| 25 | 1411 | 1116 | 2.2 | III | 1.24 | | 1134 | | | **SK 51E - 180MX/4** | 329 | 164 |
| | 1215 | 1296 | 2.1 | III | 1.44 | | 1204 | | | **SK 51E - 180MH/4** | | |
| | 1151 | 1368 | 2.0 | III | 1.52 | | 1235 | | | | | |
| | 1067 | 1476 | 1.9 | II | 1.64 | | 1274 | | | | | |
| | 962 | 1638 | 1.8 | II | 1.82 | | 1323 | | | | | |
| | 850 | 1854 | 1.8 | II | 2.06 | | 1395 | | | | | |
| | 700 | 2251 | 1.7 | II | 2.50 | | 1503 | | | | | |
| | 612 | 2575 | 1.6 | II | 2.86 | | 1586 | | | | | |
| | 529 | 2980 | 1.5 | II | 3.31 | | 1683 | | | | | |
| | 629 | 2503 | 3.1 | III | 2.78 | 1478 | 2446 | 3996 | 3872 | **SK 52 - 180MX/4** | 415 | 197 |
| | 542 | 2908 | 2.9 | III | 3.23 | 1532 | 2572 | 4059 | 4019 | **SK 52 - 180MH/4** | | |
| | 515 | 3061 | 2.9 | III | 3.40 | 1553 | 2608 | 4070 | 4070 | | | |
| | 477 | 3304 | 2.8 | III | 3.67 | 1582 | 2682 | 4088 | 4142 | | | |
| | 429 | 3673 | 2.7 | III | 4.08 | 1618 | 2763 | 4111 | 4257 | | | |
| | 400 | 3943 | 2.9 | III | 4.38 | 1676 | 2882 | 4318 | 4367 | | | |
| | 380 | 4150 | 2.5 | III | 4.61 | 1663 | 2853 | 4106 | 4374 | | | |
| | 344 | 4573 | 2.6 | III | 5.08 | 1730 | 3008 | 4325 | 4525 | | | |
| | 313 | 5041 | 2.1 | III | 5.60 | 1730 | 3008 | 4070 | 4568 | | | |
| | 302 | 5212 | 2.4 | III | 5.79 | 1782 | 3123 | 4316 | 4664 | | | |
| | 287 | 5482 | 2.4 | III | 6.09 | 1814 | 3193 | 4390 | 4732 | | | |
| | 273 | 5779 | 2.3 | III | 6.42 | 1820 | 3220 | 4293 | 4763 | | | |
| | 241 | 6545 | 2.1 | III | 7.27 | 1863 | 3319 | 4241 | 4903 | | | |
| | 227 | 6932 | 2.0 | III | 7.70 | 1897 | 3389 | 4295 | 4973 | | | |
| | 198 | 7949 | 1.9 | II | 8.83 | 1924 | 3461 | 4088 | 5094 | | | |
| | 165 | 9524 | 1.6 | II | 10.58 | 1996 | 3636 | 3980 | 5294 | | | |
| | 130 | 12108 | 1.4 | II | 13.45 | 1636 | 3863 | 3823 | 5573 | | | |
| | 125 | 12603 | 1.3 | I | 14.00 | 1159 | 3785 | 3436 | 5546 | | | |
| | 98 | 16033 | 1.1 | I | 17.81 | 486 | 3985 | 3040 | 5828 | | | |
| | 89 | 17645 | 1.0 | I | 19.60 | 86 | 4023 | 2795 | 5904 | | | |
| | 81 | 19517 | 0.9 | * | 21.68 | | | 2459 | 5990 | | | |

(AGMA Class I = $f_B$ 1.0 - 1.39 II = $f_B$ 1.4 - 1.99 III = $f_B$ ≥ 2.0 * = $f_B$ < 1.0) **(Model Type in blue is an Energy Efficient motor)**


Send Quote Requests to info@automatedpt.com
Call +1(800)985-6929 To Order or Order Online At Nordgearmotors.com

DRIVESYSTEMS

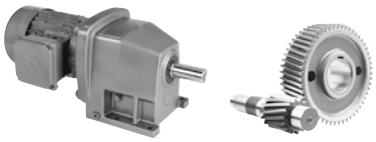

# 25 hp Gearmotors



| Motor Power $P_n$ [hp] | Output Speed $n_2$ [rpm] | Output Torque $T_a$ [lb-in] | Service Factor $f_B$ | AGMA Class | Gear Ratio $i_{tot}$ | Standard Bearings $F_{RN}$ OHL [lb] | Standard Bearings $F_{AN}$ Thrust [lb] | Heavy Duty Bearings (VL) $F_{RVL}$ OHL [lb] | Heavy Duty Bearings (VL) $F_{AVL}$ Thrust [lb] | Model Type | Weight [lb] | Dim. Page |
|---|---|---|---|---|---|---|---|---|---|---|---|---|
| 25 | 199 | 7904 | 3.4 | III | 8.78 | 4534 | 2111 | 5965 | 4705 | **SK 62 - 180MX/4** | 540 | 203 |
| | 166 | 9497 | 2.9 | III | 10.55 | 4505 | 2156 | 6080 | 4876 | SK 62 - 180MH/4 | | |
| | 151 | 10434 | 2.6 | III | 11.59 | 4484 | 2205 | 6242 | 5018 | | | |
| | 126 | 12531 | 2.2 | III | 13.92 | 4430 | 2230 | 6266 | 5173 | | | |
| | 111 | 14224 | 1.9 | II | 15.80 | 4381 | 2243 | 6230 | 5281 | | | |
| | 96 | 16330 | 1.7 | II | 18.14 | 4307 | 2234 | 6179 | 5393 | | | |
| | 101 | 15637 | 1.8 | II | 17.37 | 4331 | 2176 | 6197 | 5281 | **SK 63 - 180MX/4** | 536 | 206 |
| | 84 | 18698 | 1.5 | II | 20.77 | 4212 | 2198 | 6113 | 5445 | SK 63 - 180MH/4 | | |
| | 80 | 19787 | 1.4 | II | 21.98 | 4163 | 2131 | 6050 | 5409 | | | |
| | 67 | 23658 | 1.2 | I | 26.28 | 3960 | 2111 | 5942 | 5560 | | | |
| | 57 | 27826 | 1.1 | I | 30.91 | 3683 | 2030 | 5715 | 5596 | | | |
| | 48 | 32507 | 1.0 | I | 36.11 | 3285 | 1890 | 5351 | 5587 | | | |
| | 40 | 39097 | 0.8 | * | 43.43 | 2484 | 1690 | 4687 | 5524 | | | |
| | 122 | 12900 | 2.8 | III | 14.33 | 5902 | 2183 | 7857 | 6320 | **SK 72 - 180MX/4** | 692 | 209 |
| | 104 | 15178 | 2.4 | III | 16.86 | 5996 | 2201 | 8075 | 6536 | SK 72 - 180MH/4 | | |
| | 81 | 19553 | 1.8 | II | 21.72 | 6073 | 2207 | 8260 | 6815 | | | |
| | 81 | 19481 | 2.0 | III | 21.64 | 5920 | 2144 | 8091 | 6739 | | | |
| | 61 | 25774 | 1.4 | II | 28.63 | 5940 | 2162 | 8267 | 7092 | | | |
| | 97 | 16204 | 2.7 | III | 18.00 | 5947 | 2174 | 8062 | 6557 | **SK 73 - 180MX/4** | 714 | 212 |
| | 85 | 18563 | 2.4 | III | 20.62 | 5972 | 2169 | 8118 | 6705 | SK 73 - 180MH/4 | | |
| | 75 | 21011 | 2.1 | III | 23.34 | 5976 | 2162 | 8154 | 6836 | | | |
| | 62 | 25495 | 1.7 | II | 28.32 | 5893 | 2108 | 8143 | 7025 | | | |
| | 53 | 29924 | 1.5 | II | 33.24 | 5778 | 2034 | 8035 | 7137 | | | |
| | 47 | 33876 | 1.3 | I | 37.63 | 5596 | 1958 | 7884 | 7207 | | | |
| | 38 | 41105 | 1.2 | I | 45.66 | 5184 | 1787 | 7517 | 7265 | | | |
| | 33 | 47028 | 1.0 | I | 52.24 | 4754 | 1629 | 7137 | 7265 | | | |
| | 29 | 54428 | 0.9 | * | 60.46 | 4055 | 1411 | 6579 | 7243 | | | |
| | 83 | 18941 | 3.7 | III | 21.04 | 10098 | 4403 | 13453 | 10850 | **SK 83 - 180MX/4** | 950 | 218 |
| | 72 | 21984 | 3.2 | III | 24.42 | 10058 | 4496 | 13905 | 11185 | SK 83 - 180MH/4 | | |
| | 62 | 25234 | 2.9 | III | 28.03 | 10006 | 4568 | 14072 | 11531 | | | |
| | 54 | 29276 | 2.6 | III | 32.52 | 9929 | 4635 | 14020 | 11849 | | | |
| | 45 | 35181 | 2.3 | III | 39.08 | 9799 | 4687 | 13928 | 12254 | | | |
| | 39 | 39952 | 2.0 | III | 44.38 | 9675 | 4709 | 13840 | 12512 | | | |
| | 34 | 46371 | 1.7 | II | 51.51 | 9479 | 4680 | 13703 | 12776 | | | |
| | 28 | 55715 | 1.4 | II | 61.89 | 9131 | 4613 | 13464 | 13066 | | | |
| | 25 | 63232 | 1.3 | I | 70.24 | 8793 | 4518 | 13237 | 13235 | | | |
| | 22 | 72577 | 1.1 | I | 80.62 | 8289 | 4383 | 12908 | 13363 | | | |
| | 44 | 35595 | 3.0 | III | 39.54 | 14828 | 8660 | 20891 | 18000 | **SK 93 - 180MX/4** | 1345 | 224 |
| | 38 | 41924 | 2.6 | III | 46.57 | 14751 | 8915 | 20837 | 18000 | SK 93 - 180MH/4 | | |
| | 33 | 48432 | 2.2 | III | 53.80 | 14659 | 9101 | 20772 | 18000 | | | |
| | 28 | 55481 | 2.0 | III | 61.63 | 14544 | 9279 | 20691 | 18000 | | | |
| | 24 | 65240 | 1.8 | II | 72.47 | 14357 | 9412 | 20558 | 18000 | | | |
| | 19 | 84028 | 1.5 | II | 93.34 | 13901 | 9565 | 20243 | 18000 | | | |
| | 14 | 110774 | 1.1 | I | 123.05 | 13007 | 9565 | 19640 | 18000 | | | |
| | 25 | 63358 | 2.8 | III | 70.38 | 22725 | 14785 | 27000 | 25387 | **SK 103 - 180MX/4** | 1828 | 230 |
| | 21 | 73279 | 2.5 | III | 81.40 | 22617 | 15172 | 27000 | 26172 | SK 103 - 180MH/4 | | |
| | 17 | 94848 | 1.9 | II | 105.36 | 22320 | 15791 | 27000 | 27000 | **SK 103/52 - 180MX/4** | 1991 | 235 |
| | 14 | 110206 | 1.6 | II | 122.42 | 22061 | 16099 | 27000 | 27000 | SK 103/52 - 180MH/4 | | |
| | 11 | 139203 | 1.3 | I | 154.63 | 21452 | 16463 | 27000 | 27000 | | | |
| | 9.5 | 166201 | 1.1 | I | 184.62 | 20736 | 16623 | 27000 | 27000 | | | |
| | 7.1 | 220350 | 0.8 | * | 244.77 | 18799 | 16596 | 27000 | 27000 | | | |

(AGMA Class I = $f_B$ 1.0 - 1.39 II = $f_B$ 1.4 - 1.99 III = $f_B$ ≥ 2.0 * = $f_B$ < 1.0) **(Model Type in blue is an Energy Efficient motor)**


Send Quote Requests to info@automatedpt.com
Call +1(800)985-6929 To Order or Order Online At Nordgearmotors.com

# 30 hp Gearmotors

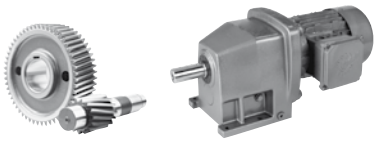

DRIVESYSTEMS

GEARMOTORS

| Motor Power $P_n$ [hp] | Output Speed $n_2$ [rpm] | Output Torque $T_2$ [lb-in] | Service Factor $f_B$ | AGMA Class | Gear Ratio $i_{tot}$ | Standard Bearings $F_{RN}$ OHL [lb] | Standard Bearings $F_{AN}$ Thrust [lb] | Heavy Duty Bearings (VL) $F_{RVL}$ OHL [lb] | Heavy Duty Bearings (VL) $F_{AVL}$ Thrust [lb] | Model Type | Weight [lb] | Dim. Page |
|---|---|---|---|---|---|---|---|---|---|---|---|---|
| 30 | 1415 | 1336 | 1.8 | II | 1.24 | | 1148 | | | SK 51E - 180LX/4 | 329 | 164 |
| | 1219 | 1551 | 1.7 | II | 1.44 | | 1213 | | | SK 51E - 180LH/4 | | |
| | 1155 | 1637 | 1.7 | II | 1.52 | | 1242 | | | | | |
| | 1070 | 1767 | 1.6 | II | 1.64 | | 1280 | | | | | |
| | 964 | 1961 | 1.5 | II | 1.82 | | 1334 | | | | | |
| | 852 | 2219 | 1.5 | II | 2.06 | | 1402 | | | | | |
| | 702 | 2693 | 1.4 | II | 2.50 | | 1514 | | | | | |
| | 614 | 3081 | 1.3 | I | 2.86 | | 1595 | | | | | |
| | 530 | 3566 | 1.2 | I | 3.31 | | 1694 | | | | | |
| | 631 | 2995 | 2.6 | III | 2.78 | 1438 | 2363 | 3776 | 3812 | SK 52 - 180LX/4 | 415 | 197 |
| | 543 | 3480 | 2.4 | III | 3.23 | 1490 | 2471 | 3796 | 3960 | SK 52 - 180LH/4 | | |
| | 516 | 3663 | 2.4 | III | 3.40 | 1505 | 2507 | 3800 | 4005 | | | |
| | 478 | 3954 | 2.4 | III | 3.67 | 1530 | 2558 | 3798 | 4070 | | | |
| | 430 | 4395 | 2.3 | III | 4.08 | 1564 | 2635 | 3782 | 4169 | | | |
| | 401 | 4719 | 2.4 | III | 4.38 | 1622 | 2763 | 3989 | 4284 | | | |
| | 381 | 4966 | 2.1 | III | 4.61 | 1602 | 2716 | 3740 | 4277 | | | |
| | 345 | 5473 | 2.2 | III | 5.08 | 1672 | 2878 | 3967 | 4430 | | | |
| | 313 | 6033 | 1.7 | II | 5.60 | 1656 | 2835 | 3614 | 4453 | | | |
| | 303 | 6238 | 2.0 | III | 5.79 | 1712 | 2966 | 3913 | 4552 | | | |
| | 288 | 6561 | 2.0 | III | 6.09 | 1744 | 3029 | 3958 | 4619 | | | |
| | 273 | 6916 | 1.9 | II | 6.42 | 1748 | 3029 | 3827 | 4649 | | | |
| | 241 | 7832 | 1.8 | II | 7.27 | 1778 | 3123 | 3708 | 4763 | | | |
| | 228 | 8295 | 1.7 | II | 7.70 | 1816 | 3184 | 3760 | 4856 | | | |
| | 199 | 9513 | 1.6 | II | 8.83 | 1537 | 3220 | 3447 | 4932 | | | |
| | 166 | 11398 | 1.4 | II | 10.58 | 1148 | 3350 | 3231 | 5110 | | | |
| | 130 | 14490 | 1.1 | I | 13.45 | 554 | 3503 | 2898 | 5371 | | | |
| | 125 | 15082 | 1.1 | I | 14.00 | | | 2428 | 5319 | | | |
| | 99 | 19187 | 0.9 | * | 17.81 | | | 1784 | 5537 | | | |
| | 90 | 21115 | 0.8 | * | 19.60 | | | 1427 | 5600 | | | |
| | 385 | 4912 | 3.3 | III | 4.56 | 4223 | 1796 | 5056 | 3938 | SK 62 - 180LX/4 | 540 | 203 |
| | 332 | 5699 | 2.9 | III | 5.29 | 4309 | 1834 | 5173 | 4066 | SK 62 - 180LH/4 | | |
| | 276 | 6841 | 2.5 | III | 6.35 | 4415 | 1872 | 5290 | 4226 | | | |
| | 232 | 8144 | 3.3 | III | 7.56 | 4529 | 1973 | 5573 | 4442 | | | |
| | 200 | 9459 | 2.8 | III | 8.78 | 4505 | 2000 | 5657 | 4579 | | | |
| | 166 | 11365 | 2.4 | III | 10.55 | 4462 | 2018 | 5720 | 4721 | | | |
| | 151 | 12486 | 2.2 | III | 11.59 | 4430 | 2068 | 5848 | 4844 | | | |
| | 126 | 14996 | 1.8 | II | 13.92 | 4354 | 2068 | 5855 | 4970 | | | |
| | 111 | 17021 | 1.6 | II | 15.80 | 4280 | 2052 | 5814 | 5049 | | | |
| | 97 | 19542 | 1.4 | II | 18.14 | 4174 | 2030 | 5726 | 5123 | | | |
| | 101 | 18713 | 1.5 | II | 17.37 | 4210 | 1967 | 5578 | 5018 | SK 63 - 180LX/4 | 536 | 206 |
| | 84 | 22375 | 1.3 | I | 20.77 | 4032 | 1946 | 5528 | 5139 | SK 63 - 180LH/4 | | |
| | 80 | 23679 | 1.2 | I | 21.98 | 3958 | 1854 | 5267 | 5083 | | | |
| | 67 | 28311 | 1.0 | I | 26.28 | 3647 | 1798 | 5081 | 5173 | | | |
| | 57 | 33299 | 1.0 | I | 30.91 | 3206 | 1654 | 4651 | 5148 | | | |
| | 49 | 38901 | 0.8 | * | 36.11 | 2513 | 1465 | 4037 | 5074 | | | |
| | 140 | 13488 | 2.7 | III | 12.52 | 5526 | 2034 | 7423 | 5985 | SK 72 - 180LX/4 | 692 | 209 |
| | 122 | 15438 | 2.3 | III | 14.33 | 5573 | 2041 | 7533 | 6149 | SK 72 - 180LH/4 | | |
| | 104 | 18163 | 2.0 | III | 16.86 | 5609 | 2039 | 7632 | 6309 | | | |
| | 81 | 23399 | 1.5 | II | 21.72 | 5564 | 1996 | 7655 | 6548 | | | |
| | 81 | 23313 | 1.7 | II | 21.64 | 5400 | 1933 | 7475 | 6453 | | | |
| | 61 | 30843 | 1.2 | I | 28.63 | 5346 | 1881 | 7477 | 6739 | | | |

(AGMA Class I = $f_B$ 1.0 - 1.39 II = $f_B$ 1.4 - 1.99 III = $f_B$ ≥ 2.0 * = $f_B$ < 1.0) **(Model Type in blue is an Energy Efficient motor)**


Send Quote Requests to info@automatedpt.com
Call +1(800)985-6929 To Order or Order Online At Nordgearmotors.com

DRIVESYSTEMS

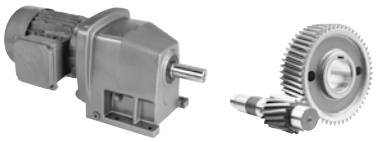

# 30 hp, 40 hp Gearmotors



| Motor Power $P_n$ [hp] | Output Speed $n_2$ [rpm] | Output Torque $T_a$ [lb-in] | Service Factor $f_B$ | AGMA Class | Gear Ratio $i_{tot}$ | Standard Bearings $F_{RN}$ OHL [lb] | Standard Bearings $F_{AN}$ Thrust [lb] | Heavy Duty Bearings (VL) $F_{RVL}$ OHL [lb] | Heavy Duty Bearings (VL) $F_{AVL}$ Thrust [lb] | Model Type | Weight [lb] | Dim. Page |
|---|---|---|---|---|---|---|---|---|---|---|---|---|
| 30 | 98 | 19391 | 2.3 | III | 18.00 | 5519 | 1994 | 7540 | 6341 | **SK 73 - 180LX/4** | 714 | 212 |
| | 85 | 22214 | 2.0 | III | 20.62 | 5474 | 1973 | 7542 | 6442 | **SK 73 - 180LH/4** | | |
| | 75 | 25144 | 1.8 | II | 23.34 | 5407 | 1933 | 7511 | 6536 | | | |
| | 62 | 30509 | 1.5 | II | 28.32 | 5209 | 1827 | 7319 | 6674 | | | |
| | 53 | 35809 | 1.2 | I | 33.24 | 4968 | 1710 | 7072 | 6716 | | | |
| | 47 | 40539 | 1.1 | I | 37.63 | 4673 | 1595 | 6813 | 6739 | | | |
| | 38 | 49189 | 1.0 | I | 45.66 | 4093 | 1341 | 6163 | 6685 | | | |
| | 34 | 56278 | 0.9 | * | 52.24 | 3546 | 1116 | 5567 | 6611 | | | |
| | 29 | 65133 | 0.8 | * | 60.46 | 2439 | 815 | 4707 | 6473 | | | |
| | 83 | 22666 | 3.1 | III | 21.04 | 10046 | 4217 | 13140 | 10573 | **SK 83 - 180LX/4** | 950 | 218 |
| | 72 | 26308 | 2.7 | III | 24.42 | 9986 | 4277 | 13527 | 10883 | **SK 83 - 180LH/4** | | |
| | 63 | 30197 | 2.4 | III | 28.03 | 9911 | 4320 | 13739 | 11185 | | | |
| | 54 | 35034 | 2.2 | III | 32.52 | 9803 | 4340 | 13930 | 11457 | | | |
| | 45 | 42101 | 1.9 | II | 39.08 | 9612 | 4340 | 13795 | 11792 | | | |
| | 40 | 47810 | 1.6 | II | 44.38 | 9430 | 4298 | 13669 | 12002 | | | |
| | 34 | 55492 | 1.4 | II | 51.51 | 9140 | 4210 | 13471 | 12175 | | | |
| | 28 | 66674 | 1.2 | I | 61.89 | 8618 | 4046 | 13122 | 12373 | | | |
| | 25 | 75669 | 1.0 | I | 70.24 | 8100 | 3879 | 12787 | 12431 | | | |
| | 22 | 86852 | 0.9 | * | 80.62 | 7299 | 3650 | 12296 | 12431 | | | |
| | 44 | 42596 | 2.5 | III | 39.54 | 14742 | 8345 | 20435 | 18000 | **SK 93 - 180LX/4** | 1345 | 224 |
| | 38 | 50170 | 2.2 | III | 46.57 | 14632 | 8550 | 20754 | 18000 | **SK 93 - 180LH/4** | | |
| | 33 | 57959 | 1.9 | II | 53.80 | 14499 | 8674 | 20660 | 18000 | | | |
| | 28 | 66394 | 1.7 | II | 61.63 | 14333 | 8771 | 20543 | 18000 | | | |
| | 24 | 78072 | 1.5 | II | 72.47 | 14058 | 8856 | 20351 | 18000 | | | |
| | 19 | 100555 | 1.2 | I | 93.34 | 13385 | 8843 | 19892 | 18000 | | | |
| | 14 | 132561 | 0.9 | * | 123.05 | 12033 | 8604 | 19010 | 18000 | | | |
| | 33 | 57075 | 3.1 | III | 52.98 | 22786 | 13604 | 27000 | 23319 | **SK 103 - 180LX/4** | 1828 | 230 |
| | 29 | 65403 | 2.7 | III | 60.71 | 22705 | 13957 | 27000 | 24041 | **SK 103 - 180LH/4** | | |
| | 25 | 75820 | 2.3 | III | 70.38 | 22586 | 14297 | 27000 | 24784 | | | |
| | 22 | 87692 | 2.1 | III | 81.40 | 22428 | 14598 | 27000 | 25468 | | | |
| | 17 | 113504 | 1.6 | II | 105.36 | 22001 | 15050 | 27000 | 26638 | **SK 103/52 - 180LX/4** | 1991 | 235 |
| | 14 | 131883 | 1.3 | I | 122.42 | 21620 | 15293 | 27000 | 27000 | **SK 103/52 - 180LH/4** | | |
| | 11 | 166582 | 1.1 | I | 154.63 | 20725 | 15442 | 27000 | 27000 | | | |
| | 9.5 | 198891 | 0.9 | * | 184.62 | 19654 | 15343 | 27000 | 27000 | | | |
| 40 | 599 | 4206 | 3.3 | III | 2.97 | 3701 | 1580 | 4451 | 3458 | **SK 62 - 200L/4** | 697 | 203 |
| | 539 | 4674 | 3.2 | III | 3.30 | 3776 | 1604 | 4520 | 3537 | **SK 62 - 200LH/4** | | |
| | 478 | 5269 | 3.1 | III | 3.72 | 3832 | 1629 | 4604 | 3629 | | | |
| | 455 | 5538 | 3.0 | III | 3.91 | 3861 | 1638 | 4633 | 3665 | | | |
| | 440 | 5736 | 2.9 | III | 4.05 | 3884 | 1647 | 4646 | 3688 | | | |
| | 390 | 6459 | 2.8 | III | 4.56 | 3931 | 1665 | 4709 | 3778 | | | |
| | 336 | 7493 | 2.2 | III | 5.29 | 3987 | 1681 | 4777 | 3877 | | | |
| | 280 | 8994 | 1.9 | II | 6.35 | 4041 | 1692 | 4808 | 3989 | | | |
| | 235 | 10708 | 2.6 | III | 7.56 | 4246 | 1784 | 5056 | 4205 | | | |
| | 203 | 12436 | 2.1 | III | 8.78 | 4259 | 1782 | 5063 | 4309 | | | |
| | 169 | 14943 | 1.8 | II | 10.55 | 4226 | 1760 | 4995 | 4399 | | | |
| | 154 | 16416 | 1.7 | II | 11.59 | 4304 | 1798 | 5096 | 4507 | | | |
| | 128 | 19716 | 1.4 | II | 13.92 | 4165 | 1744 | 4946 | 4579 | | | |

(AGMA Class I = $f_B$ 1.0 - 1.39 II = $f_B$ 1.4 - 1.99 III = $f_B$ ≥ 2.0 * = $f_B$ < 1.0) **(Model Type in blue is an Energy Efficient motor)**


Send Quote Requests to info@automatedpt.com
Call +1(800)985-6929 To Order or Order Online At Nordgearmotors.com

# 40 hp, 50 hp Gearmotors

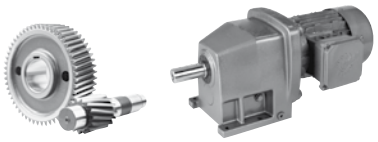

DRIVESYSTEMS

GEARMOTORS

| Motor Power $P_n$ [hp] | Output Speed $n_2$ [rpm] | Output Torque $T_2$ [lb-in] | Service Factor $f_B$ | AGMA Class | Gear Ratio $i_{tot}$ | Standard Bearings $F_{RN}$ OHL [lb] | Standard Bearings $F_{AN}$ Thrust [lb] | Heavy Duty Bearings (VL) $F_{RVL}$ OHL [lb] | Heavy Duty Bearings (VL) $F_{AVL}$ Thrust [lb] | Model Type | Weight [lb] | Dim. Page |
|---|---|---|---|---|---|---|---|---|---|---|---|---|
| 40 | 318 | 7932 | 2.9 | III | 5.60 | 4435 | 1636 | 5882 | 4736 | **SK 72 - 200L/4** | 849 | 209 |
| | 277 | 9093 | 2.7 | III | 6.42 | 4498 | 1649 | 6057 | 4874 | SK 72 - 200LH/4 | | |
| | 256 | 9844 | 3.3 | III | 6.95 | 4718 | 1739 | 6271 | 5049 | | | |
| | 217 | 11600 | 3.1 | III | 8.19 | 4793 | 1755 | 6451 | 5213 | | | |
| | 188 | 13399 | 2.9 | III | 9.46 | 4831 | 1764 | 6541 | 5348 | | | |
| | 164 | 15354 | 2.7 | III | 10.84 | 4842 | 1757 | 6595 | 5470 | | | |
| | 142 | 17733 | 2.0 | III | 12.52 | 4950 | 1793 | 6761 | 5677 | | | |
| | 124 | 20297 | 1.8 | II | 14.33 | 4937 | 1769 | 6770 | 5787 | | | |
| | 106 | 23880 | 1.5 | II | 16.86 | 4851 | 1721 | 6714 | 5879 | | | |
| | 99 | 25495 | 1.7 | II | 18.00 | 4662 | 1645 | 6527 | 5852 | **SK 73 - 200L/4** | 871 | 212 |
| | 86 | 29206 | 1.5 | II | 20.62 | 4509 | 1566 | 6372 | 5909 | SK 73 - 200LH/4 | | |
| | 76 | 33058 | 1.3 | I | 23.34 | 4298 | 1474 | 6170 | 5936 | | | |
| | 63 | 40112 | 1.1 | I | 28.32 | 3870 | 1287 | 5688 | 5936 | | | |
| | 54 | 47080 | 0.9 | * | 33.24 | 3364 | 1073 | 5153 | 5870 | | | |
| | 47 | 53298 | 0.8 | * | 37.63 | 2842 | 866 | 4552 | 5787 | | | |
| | 125 | 20240 | 2.9 | III | 14.29 | 9394 | 3751 | 11673 | 9405 | **SK 82 - 200L/4** | 1089 | 215 |
| | 107 | 23455 | 2.5 | III | 16.56 | 9547 | 3805 | 12006 | 9698 | SK 82 - 200LH/4 | | |
| | 85 | 29801 | 2.4 | III | 21.04 | 9668 | 3843 | 12285 | 10060 | **SK 83 - 200L/4** | 1107 | 218 |
| | 73 | 34588 | 2.0 | III | 24.42 | 9720 | 3843 | 12377 | 10307 | SK 83 - 200LH/4 | | |
| | 64 | 39701 | 1.8 | II | 28.03 | 9682 | 3812 | 12413 | 10523 | | | |
| | 55 | 46061 | 1.6 | II | 32.52 | 9488 | 3762 | 12393 | 10692 | | | |
| | 46 | 55352 | 1.4 | II | 39.08 | 9146 | 3650 | 12179 | 10883 | | | |
| | 40 | 62859 | 1.3 | I | 44.38 | 8811 | 3506 | 11900 | 10953 | | | |
| | 35 | 72958 | 1.1 | I | 51.51 | 8267 | 3305 | 11450 | 10989 | | | |
| | 29 | 87660 | 0.9 | * | 61.89 | 7234 | 2959 | 10645 | 10953 | | | |
| | 66 | 38313 | 2.8 | III | 27.05 | 14796 | 7400 | 18124 | 16241 | **SK 93 - 200L/4** | 1502 | 224 |
| | 57 | 44262 | 2.4 | III | 31.25 | 14720 | 7544 | 18428 | 16715 | SK 93 - 200LH/4 | | |
| | 45 | 56004 | 1.9 | II | 39.54 | 14535 | 7729 | 18878 | 17485 | | | |
| | 38 | 65961 | 1.6 | II | 46.57 | 14342 | 7803 | 19026 | 18000 | | | |
| | 33 | 76201 | 1.4 | II | 53.80 | 14105 | 7841 | 19058 | 18000 | | | |
| | 29 | 87292 | 1.3 | I | 61.63 | 13806 | 7828 | 18986 | 18000 | | | |
| | 25 | 102645 | 1.2 | I | 72.47 | 13311 | 7740 | 18671 | 18000 | | | |
| | 47 | 53681 | 3.3 | III | 37.90 | 22817 | 12159 | 26008 | 20909 | **SK 103 - 200L/4** | 1985 | 230 |
| | 39 | 64091 | 2.8 | III | 45.25 | 22718 | 12535 | 26924 | 21731 | SK 103 - 200LH/4 | | |
| | 34 | 75040 | 2.4 | III | 52.98 | 22595 | 12861 | 27000 | 22403 | | | |
| | 29 | 85988 | 2.1 | III | 60.71 | 22453 | 13091 | 27000 | 22912 | | | |
| | 25 | 99685 | 1.8 | II | 70.38 | 22244 | 13302 | 27000 | 23506 | | | |
| | 22 | 115293 | 1.6 | II | 81.40 | 21965 | 13473 | 27000 | 24041 | | | |
| 50 | 594 | 5303 | 2.6 | III | 2.97 | 3530 | 1499 | 4244 | 3359 | **SK 62 - 225S/4** | 770 | 203 |
| | 535 | 5893 | 2.5 | III | 3.30 | 3578 | 1512 | 4280 | 3431 | SK 62 - 225SH/4 | | |
| | 474 | 6643 | 2.4 | III | 3.72 | 3614 | 1528 | 4325 | 3508 | | | |
| | 451 | 6982 | 2.3 | III | 3.91 | 3641 | 1530 | 4343 | 3537 | | | |
| | 436 | 7232 | 2.3 | III | 4.05 | 3636 | 1532 | 4361 | 3560 | | | |
| | 387 | 8143 | 2.2 | III | 4.56 | 3659 | 1541 | 4367 | 3629 | | | |
| | 334 | 9446 | 1.8 | II | 5.29 | 3681 | 1535 | 4370 | 3699 | | | |
| | 278 | 11339 | 1.5 | II | 6.35 | 3645 | 1514 | 4320 | 3785 | | | |
| | 233 | 13499 | 2.0 | III | 7.56 | 3834 | 1598 | 4538 | 3989 | | | |
| | 201 | 15678 | 1.7 | II | 8.78 | 3773 | 1562 | 4439 | 4055 | | | |
| | 167 | 18839 | 1.5 | II | 10.55 | 3652 | 1496 | 4237 | 4079 | | | |
| | 152 | 20696 | 1.3 | I | 11.59 | 3724 | 1526 | 4327 | 4185 | | | |
| | 127 | 24856 | 1.1 | I | 13.92 | 3479 | 1420 | 3978 | 4185 | | | |

(AGMA Class I = $f_B$ 1.0 - 1.39 II = $f_B$ 1.4 - 1.99 III = $f_B$ ≥ 2.0 * = $f_B$ < 1.0) **(Model Type in blue is an Energy Efficient motor)**


Send Quote Requests to info@automatedpt.com
Call +1(800)985-6929 To Order or Order Online At Nordgearmotors.com

DRIVESYSTEMS

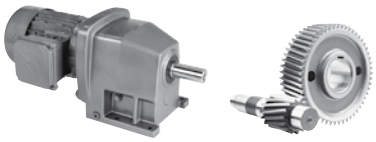

# 50 hp, 60 hp Gearmotors



| Motor Power $P_n$ [hp] | Output Speed $n_2$ [rpm] | Output Torque $T_a$ [lb-in] | Service Factor $f_B$ | AGMA Class | Gear Ratio $i_{tot}$ | Standard Bearings $F_{RN}$ OHL [lb] | Standard Bearings $F_{AN}$ Thrust [lb] | Heavy Duty Bearings (VL) $F_{RVL}$ OHL [lb] | Heavy Duty Bearings (VL) $F_{AVL}$ Thrust [lb] | Model Type | Weight [lb] | Dim. Page |
|---|---|---|---|---|---|---|---|---|---|---|---|---|
| 50 | 315 | 10000 | 2.3 | III | 5.60 | 4131 | 1505 | 5603 | 4586 | SK 72 - 225S/4 | 922 | 209 |
| | 275 | 11464 | 2.1 | III | 6.42 | 4156 | 1501 | 5648 | 4682 | SK 72 - 225SH/4 | | |
| | 254 | 12410 | 2.6 | III | 6.95 | 4392 | 1602 | 5949 | 4883 | | | |
| | 216 | 14624 | 2.4 | III | 8.19 | 4401 | 1595 | 6017 | 5009 | | | |
| | 187 | 16892 | 2.3 | III | 9.46 | 4390 | 1571 | 6014 | 5123 | | | |
| | 163 | 19356 | 2.1 | III | 10.84 | 4318 | 1539 | 5976 | 5198 | | | |
| | 141 | 22356 | 1.6 | II | 12.52 | 4379 | 1555 | 6082 | 5357 | | | |
| | 123 | 25588 | 1.4 | II | 14.33 | 4253 | 1501 | 5974 | 5427 | | | |
| | 105 | 30106 | 1.2 | I | 16.86 | 4048 | 1397 | 5762 | 5470 | | | |
| | 98 | 32142 | 1.4 | II | 18 | 3785 | 1287 | 5479 | 5400 | SK 73 - 225S/4 | 944 | 212 |
| | 86 | 36820 | 1.2 | I | 20.62 | 3485 | 1152 | 5159 | 5391 | SK 73 - 225SH/4 | | |
| | 76 | 41677 | 1.1 | I | 23.34 | 3130 | 1010 | 4754 | 5348 | | | |
| | 62 | 50569 | 0.9 | * | 28.32 | 2417 | 716 | 3949 | 5231 | | | |
| | 171 | 18446 | 2.5 | III | 10.33 | 8485 | 3391 | 10580 | 8516 | SK 82 - 225S/4 | 1162 | 215 |
| | 149 | 21142 | 2.4 | III | 11.84 | 8618 | 3434 | 10854 | 8766 | SK 82 - 225SH/4 | | |
| | 124 | 25517 | 2.3 | III | 14.29 | 8809 | 3506 | 11151 | 9079 | | | |
| | 107 | 29570 | 2.0 | III | 16.56 | 8885 | 3517 | 11286 | 9315 | | | |
| | 84 | 37570 | 1.9 | II | 21.04 | 8818 | 3456 | 11273 | 9603 | SK 83 - 225S/4 | 1180 | 218 |
| | 72 | 43605 | 1.6 | II | 24.42 | 8732 | 3402 | 11246 | 9758 | SK 83 - 225SH/4 | | |
| | 63 | 50052 | 1.4 | II | 28.03 | 8548 | 3305 | 11070 | 9902 | | | |
| | 54 | 58069 | 1.3 | I | 32.52 | 8269 | 3170 | 10825 | 9963 | | | |
| | 45 | 69783 | 1.1 | I | 39.08 | 7749 | 2925 | 10215 | 9997 | | | |
| | 40 | 79247 | 1.0 | I | 44.38 | 7259 | 2700 | 9655 | 9947 | | | |
| | 34 | 91978 | 0.9 | * | 51.51 | 6464 | 2383 | 8793 | 9821 | | | |
| | 92 | 34141 | 2.8 | III | 19.12 | 14843 | 6701 | 16382 | 14679 | SK 93 - 225S/4 | 1574 | 224 |
| | 77 | 41016 | 2.6 | III | 22.97 | 14765 | 6874 | 16787 | 15255 | SK 93 - 225SH/4 | | |
| | 65 | 48302 | 2.2 | III | 27.05 | 14661 | 6986 | 17055 | 15752 | | | |
| | 56 | 55801 | 1.9 | II | 31.25 | 14540 | 7065 | 17231 | 16162 | | | |
| | 45 | 70604 | 1.5 | II | 39.54 | 14240 | 7121 | 17305 | 16796 | | | |
| | 38 | 83157 | 1.3 | I | 46.57 | 13923 | 7099 | 17231 | 17152 | | | |
| | 33 | 96068 | 1.1 | I | 53.80 | 13536 | 7009 | 16895 | 17399 | | | |
| | 29 | 110049 | 1.0 | I | 61.63 | 13037 | 6874 | 16454 | 17568 | | | |
| | 24 | 129405 | 0.9 | * | 72.47 | 12191 | 6638 | 15662 | 17710 | | | |
| | 83 | 37838 | 2.9 | III | 21.19 | 22714 | 10526 | 22318 | 17955 | SK 103 - 225S/4 | 2057 | 230 |
| | 70 | 45177 | 2.7 | III | 25.30 | 22885 | 10904 | 23204 | 18662 | SK 103 - 225SH/4 | | |
| | 60 | 52891 | 2.5 | III | 29.62 | 22824 | 11205 | 24008 | 19298 | | | |
| | 47 | 67676 | 2.6 | III | 37.90 | 22680 | 11664 | 25153 | 20284 | | | |
| | 39 | 80800 | 2.2 | III | 45.25 | 22523 | 11927 | 25963 | 20943 | | | |
| | 33 | 94603 | 1.9 | II | 52.98 | 22325 | 12141 | 26566 | 21524 | | | |
| | 29 | 108406 | 1.6 | II | 60.71 | 22093 | 12258 | 27000 | 21942 | | | |
| | 25 | 125673 | 1.4 | II | 70.38 | 21755 | 12357 | 27000 | 22329 | | | |
| | 22 | 145351 | 1.2 | I | 81.40 | 21303 | 12357 | 27000 | 22655 | | | |
| 60 | 596 | 6345 | 2.7 | III | 2.97 | 3362 | 1413 | 4012 | 3260 | SK 62 - 225M/4 | 842 | 203 |
| | 536 | 7050 | 2.5 | III | 3.30 | 3375 | 1420 | 4032 | 3317 | SK 62 - 225MH/4 | | |
| | 476 | 7947 | 2.3 | III | 3.72 | 3391 | 1422 | 4039 | 3382 | | | |
| | 453 | 8353 | 2.1 | III | 3.91 | 3391 | 1420 | 4055 | 3404 | | | |
| | 437 | 8652 | 1.9 | II | 4.05 | 3404 | 1420 | 4052 | 3420 | | | |
| | 388 | 9742 | 1.9 | II | 4.56 | 3386 | 1409 | 4016 | 3470 | | | |
| | 335 | 11301 | 1.5 | II | 5.29 | 3359 | 1391 | 3956 | 3521 | | | |
| | 234 | 16151 | 1.7 | II | 7.56 | 3425 | 1411 | 4010 | 3760 | | | |
| | 202 | 18757 | 1.4 | II | 8.78 | 3299 | 1350 | 3832 | 3778 | | | |
| | 153 | 24760 | 1.1 | I | 11.59 | 3114 | 1258 | 3512 | 3857 | | | |

(AGMA Class I = $f_B$ 1.0 - 1.39 II = $f_B$ 1.4 - 1.99 III = $f_B$ ≥ 2.0 * = $f_B$ < 1.0) **(Model Type in blue is an Energy Efficient motor)**


Send Quote Requests to info@automatedpt.com
Call +1(800)985-6929 To Order or Order Online At Nordgearmotors.com

# 60 hp Gearmotors

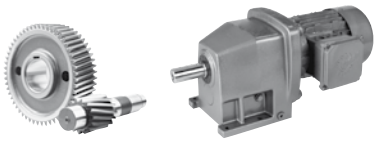

DRIVESYSTEMS

GEARMOTORS

| Motor Power $P_n$ [hp] | Output Speed $n_2$ [rpm] | Output Torque $T_2$ [lb-in] | Service Factor $f_B$ | AGMA Class | Gear Ratio $i_{tot}$ | Standard Bearings $F_{RN}$ OHL [lb] | Standard Bearings $F_{AN}$ Thrust [lb] | Heavy Duty Bearings (VL) $F_{RVL}$ OHL [lb] | Heavy Duty Bearings (VL) $F_{AVL}$ Thrust [lb] | Model Type | Weight [lb] | Dim. Page |
|---|---|---|---|---|---|---|---|---|---|---|---|---|
| 60 | 430 | 8802 | 2.7 | III | 4.12 | 3814 | 1391 | 5162 | 4199 | **SK 72 - 225M/4** | 994 | 209 |
| | 365 | 10361 | 2.5 | III | 4.85 | 3839 | 1388 | 5220 | 4316 | SK 72 - 225MH/4 | | |
| | 316 | 11963 | 2.1 | III | 5.60 | 3825 | 1375 | 5245 | 4406 | | | |
| | 276 | 13715 | 1.8 | II | 6.42 | 3789 | 1357 | 5231 | 4491 | | | |
| | 255 | 14848 | 2.6 | III | 6.95 | 4059 | 1463 | 5560 | 4698 | | | |
| | 216 | 17497 | 2.4 | III | 8.19 | 4003 | 1427 | 5535 | 4797 | | | |
| | 187 | 20210 | 2.1 | III | 9.46 | 3915 | 1382 | 5470 | 4874 | | | |
| | 163 | 23158 | 1.8 | II | 10.84 | 3791 | 1328 | 5348 | 4921 | | | |
| | 141 | 26747 | 1.3 | I | 12.52 | 3798 | 1316 | 5409 | 5056 | | | |
| | 124 | 30614 | 1.2 | I | 14.33 | 3605 | 1224 | 5182 | 5074 | | | |
| | 98 | 38454 | 1.2 | I | 18.00 | 2907 | 941 | 4399 | 4946 | **SK 73 - 225M/4** | 1017 | 212 |
| | 86 | 44051 | 1.0 | I | 20.62 | 2448 | 752 | 3904 | 4874 | SK 73 - 225MH/4 | | |
| | 76 | 49862 | 0.9 | * | 23.34 | 1847 | 554 | 3337 | 4775 | | | |
| | 286 | 13224 | 2.9 | III | 6.19 | 7349 | 2939 | 9126 | 7335 | **SK 82 - 225M/4** | 1235 | 215 |
| | 240 | 15788 | 3.5 | III | 7.39 | 7767 | 3105 | 9641 | 7760 | SK 82 - 225MH/4 | | |
| | 201 | 18842 | 3.1 | III | 8.82 | 7940 | 3170 | 9968 | 8026 | | | |
| | 171 | 22068 | 2.8 | III | 10.33 | 8060 | 3200 | 10206 | 8273 | | | |
| | 149 | 25294 | 2.5 | III | 11.84 | 8134 | 3231 | 10310 | 8474 | | | |
| | 124 | 30528 | 1.9 | II | 14.29 | 8251 | 3247 | 10490 | 8766 | | | |
| | 107 | 35378 | 1.6 | II | 16.56 | 8251 | 3231 | 10517 | 8951 | | | |
| | 84 | 44948 | 1.6 | II | 21.04 | 7947 | 3080 | 10276 | 9124 | **SK 83 - 225M/4** | 1252 | 218 |
| | 72 | 52169 | 1.4 | II | 24.42 | 7722 | 2959 | 10031 | 9227 | SK 83 - 225MH/4 | | |
| | 63 | 59881 | 1.2 | I | 28.03 | 7385 | 2806 | 9682 | 9241 | | | |
| | 54 | 69474 | 1.1 | I | 32.52 | 6919 | 2590 | 9167 | 9227 | | | |
| | 40 | 94811 | 0.8 | * | 44.38 | 5328 | 1924 | 7387 | 8951 | | | |
| | 143 | 26469 | 3.5 | III | 12.39 | 13505 | 6057 | 14796 | 13100 | **SK 92 - 225M/4** | 1623 | 221 |
| | 123 | 30678 | 3.1 | III | 14.36 | 13865 | 6203 | 15161 | 13527 | SK 92 - 225MH/4 | | |
| | 107 | 35185 | 2.7 | III | 16.47 | 14180 | 6325 | 15458 | 13923 | | | |
| | 93 | 40847 | 2.6 | III | 19.12 | 14391 | 6406 | 15644 | 14308 | **SK 93 - 225M/4** | 1647 | 224 |
| | 77 | 49072 | 2.2 | III | 22.97 | 14650 | 6509 | 15887 | 14798 | SK 93 - 225MH/4 | | |
| | 65 | 57788 | 1.9 | II | 27.05 | 14504 | 6572 | 16038 | 15208 | | | |
| | 57 | 66760 | 1.6 | II | 31.25 | 14324 | 6584 | 15991 | 15552 | | | |
| | 45 | 84471 | 1.3 | I | 39.54 | 13887 | 6521 | 15732 | 16009 | | | |
| | 38 | 99489 | 1.1 | I | 46.57 | 13421 | 6377 | 15311 | 16241 | | | |
| | 33 | 114935 | 0.9 | * | 53.80 | 12841 | 6185 | 14706 | 16371 | | | |
| | 29 | 131662 | 0.9 | * | 61.63 | 12078 | 5931 | 13905 | 16452 | | | |
| | 84 | 45269 | 3.9 | III | 21.19 | 22124 | 10226 | 21834 | 17559 | **SK 103 - 225M/4** | 2130 | 230 |
| | 70 | 54049 | 3.3 | III | 25.30 | 22813 | 10544 | 22655 | 18277 | SK 103 - 225MH/4 | | |
| | 60 | 63278 | 2.8 | III | 29.62 | 22727 | 10798 | 23312 | 18842 | | | |
| | 47 | 80967 | 2.2 | III | 37.90 | 22520 | 11169 | 24311 | 19643 | | | |
| | 39 | 96669 | 1.8 | II | 45.25 | 22293 | 11313 | 24939 | 20153 | | | |
| | 33 | 113183 | 1.6 | II | 52.98 | 22005 | 11405 | 25344 | 20576 | | | |
| | 29 | 129697 | 1.4 | II | 60.71 | 21670 | 11423 | 25360 | 20878 | | | |
| | 25 | 150355 | 1.2 | I | 70.38 | 21175 | 11387 | 25085 | 21112 | | | |

(AGMA Class I = $f_B$ 1.0 - 1.39 II = $f_B$ 1.4 - 1.99 III = $f_B$ ≥ 2.0 * = $f_B$ < 1.0) **(Model Type in blue is an Energy Efficient motor)**


Send Quote Requests to info@automatedpt.com
Call +1(800)985-6929 To Order or Order Online At Nordgearmotors.com

DRIVESYSTEMS

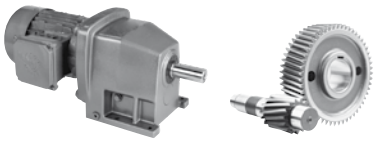

# 75 hp, 100 hp Gearmotors



| Motor Power $P_n$ [hp] | Output Speed $n_2$ [rpm] | Output Torque $T_a$ [lb-in] | Service Factor $f_B$ | AGMA Class | Gear Ratio $i_{tot}$ | Standard Bearings $F_{RN}$ OHL [lb] | Standard Bearings $F_{AN}$ Thrust [lb] | Heavy Duty Bearings (VL) $F_{RVL}$ OHL [lb] | Heavy Duty Bearings (VL) $F_{AVL}$ Thrust [lb] | Model Type | Weight [lb] | Dim. Page |
|---|---|---|---|---|---|---|---|---|---|---|---|---|
| **75** | 617 | 7666 | 3.6 | III | 2.89 | 6203 | 2495 | 7508 | 6032 | **SK 82 - 250M/4** | 1641 | 215 |
| | 492 | 9603 | 3.6 | III | 3.62 | 6451 | 2590 | 7911 | 6350 | **SK 82 - 250MH/4** | | |
| | 402 | 11751 | 3.3 | III | 4.43 | 6662 | 2666 | 8253 | 6642 | | | |
| | 337 | 14033 | 3.0 | III | 5.29 | 6811 | 2723 | 8557 | 6881 | | | |
| | 288 | 16420 | 2.3 | III | 6.19 | 6914 | 2747 | 8753 | 7094 | | | |
| | 241 | 19603 | 2.8 | III | 7.39 | 7310 | 2907 | 9241 | 7490 | | | |
| | 202 | 23397 | 2.5 | III | 8.82 | 7400 | 2925 | 9394 | 7722 | | | |
| | 173 | 27402 | 2.2 | III | 10.33 | 7432 | 2925 | 9468 | 7922 | | | |
| | 151 | 31408 | 2.0 | III | 11.84 | 7407 | 2903 | 9473 | 8078 | | | |
| | 125 | 37907 | 1.5 | II | 14.29 | 7396 | 2873 | 9491 | 8273 | | | |
| | 108 | 43928 | 1.3 | I | 16.56 | 7229 | 2806 | 9362 | 8379 | | | |
| | 144 | 32867 | 2.9 | III | 12.39 | 12922 | 5771 | 14096 | 12728 | **SK 92 - 250M/4** | 2029 | 221 |
| | 124 | 38092 | 2.5 | III | 14.36 | 13185 | 5875 | 14342 | 13122 | **SK 92 - 250MH/4** | | |
| | 108 | 43690 | 2.1 | III | 16.47 | 13442 | 5951 | 14515 | 13464 | | | |
| | 93 | 50719 | 2.1 | III | 19.12 | 13498 | 5960 | 14558 | 13748 | **SK 93 - 250M/4** | 2053 | 224 |
| | 78 | 60932 | 1.8 | II | 22.97 | 13590 | 5999 | 14537 | 14150 | **SK 93 - 250MH/4** | | |
| | 66 | 71755 | 1.5 | II | 27.05 | 13588 | 5951 | 14400 | 14425 | | | |
| | 57 | 82896 | 1.3 | I | 31.25 | 13514 | 5875 | 14128 | 14657 | | | |
| | 45 | 104887 | 1.0 | I | 39.54 | 12998 | 5616 | 13340 | 14870 | | | |
| | 38 | 123535 | 0.9 | * | 46.57 | 12467 | 5319 | 12470 | 14895 | | | |
| | 33 | 142714 | 0.8 | * | 53.80 | 11486 | 4964 | 11356 | 14870 | | | |
| | 84 | 56210 | 3.1 | III | 21.19 | 21242 | 9779 | 21103 | 17030 | **SK 103 - 250M/4** | 2536 | 230 |
| | 70 | 67113 | 2.6 | III | 25.30 | 21796 | 10015 | 21773 | 17559 | **SK 103 - 250MH/4** | | |
| | 60 | 78572 | 2.3 | III | 29.62 | 22192 | 10195 | 22309 | 18014 | | | |
| | 47 | 100536 | 1.8 | II | 37.90 | 22230 | 10357 | 22984 | 18662 | | | |
| | 39 | 120033 | 1.5 | II | 45.25 | 21872 | 10393 | 23027 | 19053 | | | |
| | 34 | 140539 | 1.3 | I | 52.98 | 21420 | 10325 | 22687 | 19238 | | | |
| | 29 | 161044 | 1.1 | I | 60.71 | 20885 | 10195 | 22138 | 19330 | | | |
| | 25 | 186695 | 0.9 | * | 70.38 | 20088 | 9983 | 21272 | 19330 | | | |
| **100** | 619 | 10187 | 2.7 | III | 2.89 | 5866 | 2349 | 7265 | 5843 | **SK 82 - 280S/4** | 2026 | 215 |
| | 494 | 12760 | 2.7 | III | 3.62 | 6055 | 2410 | 7603 | 6120 | **SK 82 - 280SH/4** | | |
| | 404 | 15615 | 2.5 | III | 4.43 | 6167 | 2437 | 7790 | 6350 | | | |
| | 338 | 18647 | 2.3 | III | 5.29 | 6206 | 2448 | 7889 | 6536 | | | |
| | 289 | 21819 | 1.7 | II | 6.19 | 6208 | 2432 | 7936 | 6685 | | | |
| | 242 | 26049 | 2.1 | III | 7.39 | 6563 | 2585 | 8379 | 7083 | | | |
| | 203 | 31089 | 1.9 | II | 8.82 | 6498 | 2536 | 8350 | 7232 | | | |
| | 173 | 36412 | 1.7 | II | 10.33 | 6377 | 2468 | 8244 | 7324 | | | |
| | 151 | 41734 | 1.5 | II | 11.84 | 6221 | 2383 | 8066 | 7385 | | | |
| | 125 | 50370 | 1.2 | I | 14.29 | 5942 | 2266 | 7801 | 7490 | | | |
| | 108 | 58372 | 1.0 | I | 16.56 | 5540 | 2075 | 7362 | 7466 | | | |
| | 315 | 20021 | 2.5 | III | 5.68 | 10447 | 4671 | 11412 | 10220 | **SK 92 - 280S/4** | 2414 | 221 |
| | 267 | 23617 | 2.4 | III | 6.70 | 10719 | 4793 | 11680 | 10550 | **SK 92 - 280SH/4** | | |
| | 230 | 27423 | 2.0 | III | 7.78 | 10940 | 4862 | 11894 | 10879 | | | |
| | 170 | 37011 | 2.4 | III | 10.50 | 11795 | 5252 | 12782 | 11804 | | | |
| | 144 | 43673 | 2.1 | III | 12.39 | 11977 | 5310 | 12933 | 12150 | | | |
| | 125 | 50617 | 1.9 | II | 14.36 | 12085 | 5335 | 13012 | 12445 | | | |
| | 109 | 58055 | 1.6 | II | 16.47 | 12134 | 5335 | 12956 | 12688 | | | |
| | 94 | 67396 | 1.6 | II | 19.12 | 11977 | 5252 | 12647 | 12850 | **SK 93 - 280S/4** | 2439 | 224 |
| | 78 | 80966 | 1.3 | I | 22.97 | 11779 | 5110 | 12251 | 13039 | **SK 93 - 280SH/4** | | |
| | 66 | 95348 | 1.1 | I | 27.05 | 11421 | 4941 | 11696 | 13165 | | | |
| | 57 | 110152 | 1.0 | I | 31.25 | 10978 | 4700 | 10931 | 13165 | | | |
| | 45 | 139373 | 0.8 | * | 39.54 | 9538 | 4115 | 9232 | 13039 | | | |

(AGMA Class I = $f_B$ 1.0 - 1.39 II = $f_B$ 1.4 - 1.99 III = $f_B$ ≥ 2.0 * = $f_B$ < 1.0) **(Model Type in blue is an Energy Efficient motor)**


Send Quote Requests to info@automatedpt.com
Call +1(800)985-6929 To Order or Order Online At Nordgearmotors.com

# 100 hp, 125 hp Gearmotors

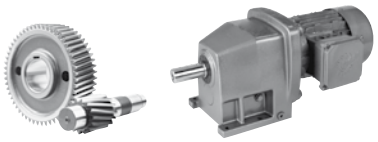

DRIVESYSTEMS

GEARMOTORS

| Motor Power $P_n$ [hp] | Output Speed $n_2$ [rpm] | Output Torque $T_2$ [lb-in] | Service Factor $f_B$ | AGMA Class | Gear Ratio $i_{tot}$ | Standard Bearings $F_{RN}$ OHL [lb] | Standard Bearings $F_{AN}$ Thrust [lb] | Heavy Duty Bearings (VL) $F_{RVL}$ OHL [lb] | Heavy Duty Bearings (VL) $F_{AVL}$ Thrust [lb] | Model Type | Weight [lb] | Dim. Page |
|---|---|---|---|---|---|---|---|---|---|---|---|---|
| **100** | 342 | 18435 | 2.9 | III | 5.23 | 15197 | 7049 | 14882 | 11932 | **SK 102 - 280S/4** | 2902 | 227 |
| | 287 | 21995 | 2.8 | III | 6.24 | 15811 | 7315 | 15509 | 12458 | SK 102 - 280SH/4 | | |
| | 238 | 26437 | 2.7 | III | 7.50 | 16445 | 7601 | 16164 | 12989 | | | |
| | 180 | 35108 | 2.9 | III | 9.96 | 17755 | 8237 | 17496 | 14074 | | | |
| | 151 | 41875 | 2.8 | III | 11.88 | 18360 | 8492 | 18167 | 14625 | | | |
| | 125 | 50370 | 2.7 | III | 14.29 | 18936 | 8753 | 18824 | 15174 | | | |
| | 108 | 58619 | 2.5 | III | 16.63 | 19400 | 8937 | 19375 | 15617 | | | |
| | 92 | 68277 | 2.2 | III | 19.37 | 19784 | 9113 | 19834 | 16025 | | | |
| | 84 | 74692 | 2.4 | III | 21.19 | 19751 | 9054 | 19899 | 16101 | **SK 103 - 280S/4** | 2922 | 230 |
| | 71 | 89179 | 2.0 | III | 25.30 | 20059 | 9155 | 20329 | 16520 | SK 103 - 280SH/4 | | |
| | 60 | 104407 | 1.7 | II | 29.62 | 20131 | 9200 | 20351 | 16760 | | | |
| | 47 | 133593 | 1.3 | I | 37.90 | 19919 | 9068 | 19836 | 17030 | | | |
| | 40 | 159500 | 1.1 | I | 45.25 | 18979 | 8852 | 19028 | 17084 | | | |
| | 34 | 186748 | 0.9 | * | 52.98 | 17782 | 8532 | 17917 | 17030 | | | |
| | 29 | 213995 | 0.8 | * | 60.71 | 16241 | 8145 | 16621 | 16760 | | | |
| **125** | 509 | 15483 | 3.1 | III | 3.51 | 9234 | 4136 | 10112 | 8946 | **SK 92 - 280M/4** | 2525 | 221 |
| | 314 | 25054 | 2.5 | III | 5.68 | 9950 | 4424 | 10809 | 9911 | SK 92 - 280MH/4 | | |
| | 267 | 29553 | 2.3 | III | 6.70 | 10134 | 4487 | 10953 | 10220 | | | |
| | 230 | 34317 | 1.6 | II | 7.78 | 10249 | 4525 | 11041 | 10467 | | | |
| | 170 | 46315 | 1.9 | II | 10.50 | 10991 | 4847 | 11788 | 11322 | | | |
| | 144 | 54651 | 1.7 | II | 12.39 | 11014 | 4847 | 11736 | 11579 | | | |
| | 124 | 63341 | 1.5 | II | 14.36 | 10978 | 4799 | 11576 | 11786 | | | |
| | 108 | 72648 | 1.3 | I | 16.47 | 10841 | 4716 | 11351 | 11918 | | | |
| | 341 | 23069 | 3.2 | III | 5.23 | 14778 | 6860 | 14569 | 11705 | **SK 102 - 280M/4** | 3012 | 227 |
| | 286 | 27524 | 3.0 | III | 6.24 | 15323 | 7083 | 15136 | 12182 | SK 102 - 280MH/4 | | |
| | 238 | 33082 | 2.8 | III | 7.50 | 15854 | 7315 | 15721 | 12638 | | | |
| | 179 | 43933 | 3.0 | III | 9.96 | 17100 | 7900 | 17008 | 13673 | | | |
| | 150 | 52402 | 2.7 | III | 11.88 | 17577 | 8091 | 17537 | 14139 | | | |
| | 125 | 63032 | 2.3 | III | 14.29 | 18014 | 8276 | 18068 | 14625 | | | |
| | 107 | 73353 | 2.1 | III | 16.63 | 18302 | 8397 | 18459 | 14933 | | | |
| | 92 | 85439 | 1.7 | II | 19.37 | 18529 | 8492 | 18783 | 15248 | | | |
| | 84 | 93467 | 1.9 | II | 21.19 | 18284 | 8343 | 18527 | 15224 | **SK 103 - 280M/4** | 3032 | 230 |
| | 71 | 111596 | 1.6 | II | 25.30 | 18266 | 8316 | 18286 | 15419 | SK 103 - 280MH/4 | | |
| | 60 | 130651 | 1.4 | II | 29.62 | 17861 | 8170 | 17784 | 15543 | | | |
| | 47 | 167173 | 1.1 | I | 37.90 | 16229 | 7787 | 16391 | 15444 | | | |
| | 39 | 199593 | 0.9 | * | 45.25 | 14474 | 7315 | 14895 | 15224 | | | |
| | 34 | 233690 | 0.8 | * | 52.98 | 12386 | 6730 | 12929 | 14767 | | | |

(AGMA Class I = $f_B$ 1.0 - 1.39 II = $f_B$ 1.4 - 1.99 III = $f_B$ ≥ 2.0 * = $f_B$ < 1.0) **(Model Type in blue is an Energy Efficient motor)**


Send Quote Requests to info@automatedpt.com
Call +1(800)985-6929 To Order or Order Online At Nordgearmotors.com

DRIVESYSTEMS

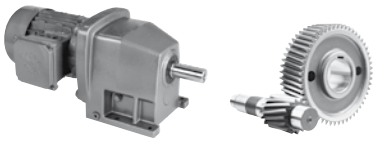

# 150 hp, 175 hp, 200 hp Gearmotors



| Motor Power $P_n$ [hp] | Output Speed $n_2$ [rpm] | Output Torque $T_a$ [lb-in] | Service Factor $f_B$ | AGMA Class | Gear Ratio $i_{tot}$ | Standard Bearings $F_{RN}$ OHL [lb] | Standard Bearings $F_{AN}$ Thrust [lb] | Heavy Duty Bearings (VL) $F_{RVL}$ OHL [lb] | Heavy Duty Bearings (VL) $F_{AVL}$ Thrust [lb] | Model Type | Weight [lb] | Dim. Page |
|---|---|---|---|---|---|---|---|---|---|---|---|---|
| **150** | 509 | 18558 | 2.6 | III | 3.51 | 8919 | 3978 | 9740 | 8746 | **SK 92 - 315S/4** | 2900 | 221 |
| | 315 | 30033 | 2.1 | III | 5.68 | 9441 | 4176 | 10190 | 9583 | **SK 92 - 315SH/4** | | |
| | 267 | 35427 | 1.9 | II | 6.70 | 9527 | 4203 | 10220 | 9833 | | | |
| | 230 | 41137 | 1.3 | I | 7.78 | 9545 | 4187 | 10179 | 10040 | | | |
| | 170 | 55519 | 1.6 | II | 10.5 | 10204 | 4466 | 10809 | 10861 | | | |
| | 144 | 65513 | 1.4 | II | 12.39 | 10069 | 4381 | 10517 | 11000 | | | |
| | 125 | 75929 | 1.3 | I | 14.36 | 9853 | 4264 | 10152 | 11106 | | | |
| | 109 | 87086 | 1.1 | I | 16.47 | 9583 | 4115 | 9716 | 11196 | | | |
| | 342 | 27654 | 2.7 | III | 5.23 | 14416 | 6656 | 14240 | 11462 | **SK 102 - 315S/4** | 3387 | 227 |
| | 287 | 32994 | 2.5 | III | 6.24 | 14846 | 6860 | 14742 | 11873 | **SK 102 - 315SH/4** | | |
| | 238 | 39657 | 2.3 | III | 7.50 | 15280 | 7027 | 15235 | 12301 | | | |
| | 180 | 52664 | 2.5 | III | 9.96 | 16430 | 7589 | 16472 | 13262 | | | |
| | 151 | 62816 | 2.2 | III | 11.88 | 16790 | 7711 | 16891 | 13651 | | | |
| | 125 | 75559 | 1.9 | II | 14.29 | 17062 | 7823 | 17276 | 14051 | | | |
| | 108 | 87932 | 1.7 | II | 16.63 | 17240 | 7850 | 17435 | 14254 | | | |
| | 92 | 102420 | 1.5 | II | 19.37 | 17231 | 7837 | 17267 | 14486 | | | |
| | 84 | 112043 | 1.6 | II | 21.19 | 16745 | 7625 | 16686 | 14324 | **SK 103 - 315S/4** | 3407 | 230 |
| | 71 | 133775 | 1.3 | I | 25.30 | 15962 | 7445 | 16027 | 14346 | **SK 103 - 315SH/4** | | |
| | 60 | 156617 | 1.1 | I | 29.62 | 14906 | 7175 | 15059 | 14324 | | | |
| | 47 | 200398 | 0.9 | * | 37.90 | 12411 | 6518 | 12926 | 13894 | | | |
| **175** | 510 | 21627 | 2.3 | III | 3.51 | 8600 | 3834 | 9351 | 8566 | **SK 92 - 315M/4** | 3076 | 221 |
| | 315 | 34999 | 1.8 | II | 5.68 | 8937 | 3929 | 9572 | 9281 | **SK 92 - 315MH/4** | | |
| | 267 | 41284 | 1.7 | II | 6.70 | 8921 | 3915 | 9486 | 9477 | | | |
| | 230 | 47938 | 1.1 | I | 7.78 | 8852 | 3848 | 9320 | 9614 | | | |
| | 170 | 64698 | 1.4 | II | 10.50 | 9380 | 4077 | 9743 | 10350 | | | |
| | 144 | 76344 | 1.2 | I | 12.39 | 9117 | 3922 | 9277 | 10433 | | | |
| | 125 | 88483 | 1.1 | I | 14.36 | 8721 | 3733 | 8701 | 10451 | | | |
| | 418 | 26372 | 3.2 | III | 4.28 | 13523 | 6262 | 13379 | 10784 | **SK 102 - 315M/4** | 3563 | 227 |
| | 342 | 32226 | 2.9 | III | 5.23 | 13993 | 6455 | 13919 | 11225 | **SK 102 - 315MH/4** | | |
| | 287 | 38449 | 2.6 | III | 6.24 | 14380 | 6613 | 14337 | 11574 | | | |
| | 239 | 46213 | 2.2 | III | 7.50 | 14697 | 6750 | 14765 | 11932 | | | |
| | 180 | 61371 | 2.2 | III | 9.96 | 15782 | 7245 | 15899 | 12863 | | | |
| | 151 | 73202 | 1.9 | II | 11.88 | 16022 | 7326 | 16241 | 13176 | | | |
| | 125 | 88051 | 1.7 | II | 14.29 | 16115 | 7362 | 16326 | 13478 | | | |
| | 108 | 102470 | 1.5 | II | 16.63 | 16081 | 7315 | 16090 | 13628 | | | |
| | 92 | 119353 | 1.2 | I | 19.37 | 15680 | 7209 | 15651 | 13673 | | | |
| **200** | 510 | 24717 | 2.0 | III | 3.51 | 8289 | 3683 | 8978 | 8377 | **SK 92 - 315MA/4** | 3407 | 221 |
| | 315 | 39998 | 1.6 | II | 5.68 | 8417 | 3683 | 8930 | 8973 | | | |
| | 267 | 47180 | 1.5 | II | 6.70 | 8321 | 3614 | 8717 | 9133 | | | |
| | 230 | 54786 | 1.0 | I | 7.78 | 8161 | 3512 | 8406 | 9223 | | | |
| | 170 | 73940 | 1.2 | I | 10.50 | 8532 | 3683 | 8703 | 9864 | | | |
| | 144 | 87249 | 1.1 | I | 12.39 | 8109 | 3467 | 8015 | 9864 | | | |
| | 125 | 101121 | 0.9 | * | 14.36 | 7576 | 3195 | 7205 | 9801 | | | |
| | 418 | 30139 | 2.8 | III | 4.28 | 13192 | 6084 | 13097 | 10562 | **SK 102 - 315MA/4** | 3894 | 227 |
| | 342 | 36829 | 2.5 | III | 5.23 | 13601 | 6262 | 13579 | 10958 | | | |
| | 287 | 43941 | 2.3 | III | 6.24 | 13928 | 6383 | 13961 | 11279 | | | |
| | 239 | 52814 | 1.9 | II | 7.50 | 14130 | 6464 | 14303 | 11574 | | | |
| | 180 | 70137 | 1.9 | II | 9.96 | 15125 | 6928 | 15365 | 12458 | | | |
| | 151 | 83657 | 1.7 | II | 11.88 | 15203 | 6937 | 15383 | 12701 | | | |
| | 125 | 100628 | 1.5 | II | 14.29 | 15152 | 6883 | 15075 | 12863 | | | |
| | 108 | 117106 | 1.3 | I | 16.63 | 14641 | 6784 | 14623 | 12947 | | | |
| | 92 | 136401 | 1.1 | I | 19.37 | 13912 | 6581 | 13943 | 12884 | | | |

(AGMA Class I = $f_B$ 1.0 - 1.39 II = $f_B$ 1.4 - 1.99 III = $f_B$ ≥ 2.0 * = $f_B$ < 1.0) **(Model Type in blue is an Energy Efficient motor)**


Send Quote Requests to info@automatedpt.com
Call +1(800)985-6929 To Order or Order Online At Nordgearmotors.com

# Notes

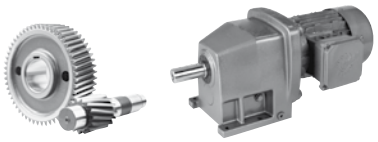

NORD DRIVESYSTEMS

NOTES


Send Quote Requests to info@automatedpt.com
Call +1(800)985-6929 To Order or Order Online At Nordgearmotors.com

Send Quote Requests to info@automatedpt.com
Call +1(800)985-6929 To Order or Order Online At Nordgearmotors.com

# In-line Helical Reducers
# Selections & Combinations

## Selection

- SK 02
- SK 03
- SK 11E
- SK 12
- SK 13
- SK 12/02
- SK 21E
- SK 22
- SK 23
- SK 22/02
- SK 31E
- SK 32
- SK 33N
- SK 32/12
- SK 41E
- SK 42
- SK 43
- SK 42/12
- SK 51E
- SK 52
- SK 53
- SK 52/12
- SK 62
- SK 63
- SK 63/22
- SK 63/23
- SK 72
- SK 73
- SK 73/22
- SK 73/23
- SK 73/32
- SK 82
- SK 83
- SK 83/32
- SK 83/33
- SK 83/42
- SK 92
- SK 93
- SK 93/42
- SK 93/43
- SK 93/52
- SK 102
- SK 103
- SK 103/52
- SK 103/53

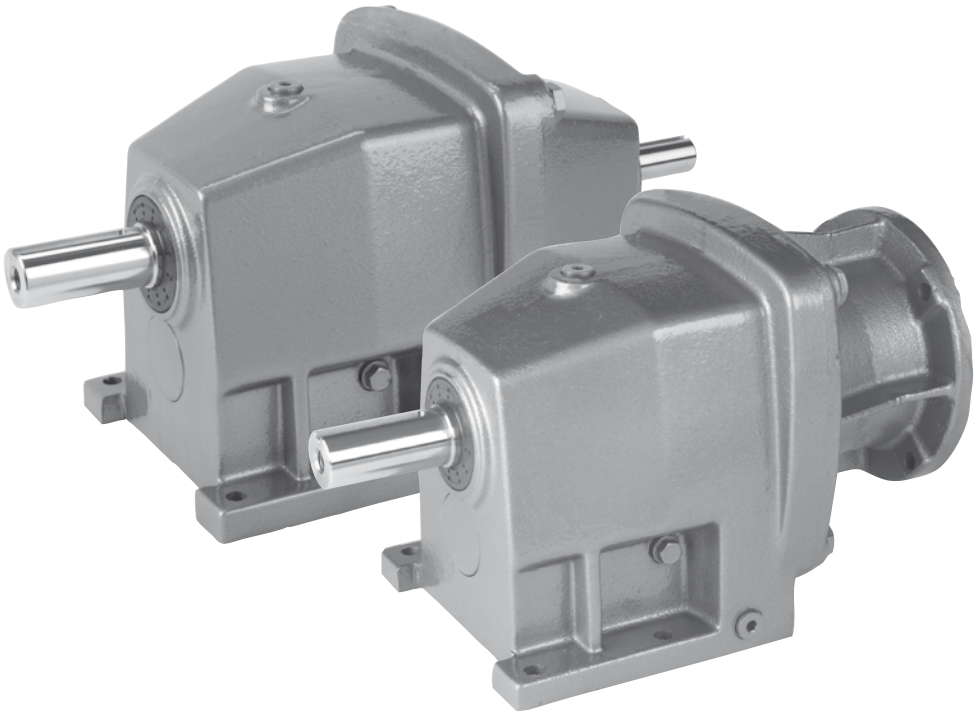

NORD® DRIVESYSTEMS

www.nord.com

UNICASE™

| Model Type | Gear Ratio $i_{tot}$ | Output Speed $n_2$ 1750 rpm [rpm] | Output Torque* $T_{2\,max}$ [lb-in] | Maximu Solid input 1750 rpm [hp] | Inpu 1150 r [hp] |
|---|---|---|---|---|---|
| SK 02 | 2.95 | 593 | 407 | 2.00 | 1.32 |
| | 3.38 | 518 | 451 | 2.00 | 1.32 |
| | 3.89 | 450 | 469 | 2.00 | 1.32 |
| | 4.22 | 415 | 460 | 2.00 | 1.32 |
| | 4.82 | 363 | 504 | 2.00 | 1.32 |
| | 5.57 | 314 | 504 | 2.00 | 1.32 |
| | 6.10 | 287 | 504 | 2.00 | 1.32 |
| | 6.89 | 254 | 540 | 2.00 | 1.32 |
| | 7.80 | 224 | 558 | 1.98 | 1.31 |
| | 8.19 | 214 | 558 | 1.89 | 1.25 |
| | 9.28 | 189 | 575 | 1.73 | 1.14 |
| | 9.95 | 176 | 566 | 1.58 | 1.04 |
| | 11.27 | 155 | 593 | 1.46 | 0.96 |
| | 12.82 | 137 | 620 | 1.35 | 0.89 |
| | 15.95 | 110 | 637 | 1.11 | 0.7 |
| | 20.59 | 85 | 655 | 0.88 | |

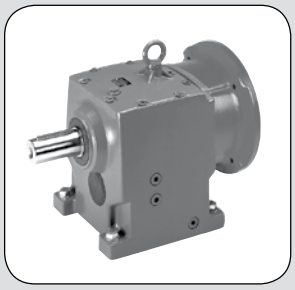

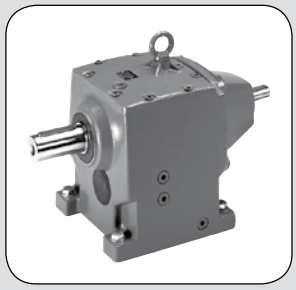

Send Quote Requests to info@automatedpt.com
Call +1(800)985-6929 To Order or Order Online At Nordgearmotors.com

# SK 02, SK 03
# NEMA-C + W
# Ratings & Combinations

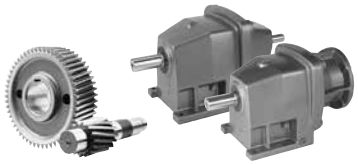

DRIVESYSTEMS

W + NEMA

| Model Type | Gear Ratio | Output Speed | Output Torque* | Maximum input power◈ Solid input shafts type "W" | | | | NEMA C-Face* Available Combinations | | | | | | | |
|---|---|---|---|---|---|---|---|---|---|---|---|---|---|---|---|
| | | | | Input Speed | | | | | | | | | | | |
| | $i_{tot}$ | $n_2$ 1750 rpm | $T_{2\ max}$ | 1750 rpm | 1150 rpm | 875 rpm | 580 rpm | | | | | | | | |
| | | [rpm] | [lb-in] | [hp] | [hp] | [hp] | [hp] | 56C | 140TC | 180TC | 210TC | 250TC | 280TC | 320TC | 360TC |
| **SK 02** | 2.95 | 593 | 407 | 2.00 | 1.32 | 1.00 | 0.66 | X | X | | | | | | |
| | 3.38 | 518 | 451 | 2.00 | 1.32 | 1.00 | 0.66 | X | X | | | | | | |
| | 3.89 | 450 | 469 | 2.00 | 1.32 | 1.00 | 0.66 | X | X | | | | | | |
| | 4.22 | 415 | 460 | 2.00 | 1.32 | 1.00 | 0.66 | X | X | | | | | | |
| | 4.82 | 363 | 504 | 2.00 | 1.32 | 1.00 | 0.66 | X | X | | | | | | |
| | 5.57 | 314 | 504 | 2.00 | 1.32 | 1.00 | 0.66 | X | X | | | | | | |
| | 6.10 | 287 | 504 | 2.00 | 1.32 | 1.00 | 0.66 | X | X | | | | | | |
| | 6.89 | 254 | 540 | 2.00 | 1.32 | 1.00 | 0.66 | X | X | | | | | | |
| | 7.80 | 224 | 558 | 1.98 | 1.31 | 0.99 | 0.65 | X | X* | | | | | | |
| | 8.19 | 214 | 558 | 1.89 | 1.25 | 0.95 | 0.62 | X | X* | | | | | | |
| | 9.28 | 189 | 575 | 1.73 | 1.14 | 0.86 | 0.57 | X | X* | | | | | | |
| | 9.95 | 176 | 566 | 1.58 | 1.04 | 0.79 | 0.52 | X | X* | | | | | | |
| | 11.27 | 155 | 593 | 1.46 | 0.96 | 0.73 | 0.48 | X | X* | | | | | | |
| | 12.82 | 137 | 620 | 1.35 | 0.89 | 0.67 | 0.44 | X | X* | | | | | | |
| | 15.95 | 110 | 637 | 1.11 | 0.73 | 0.56 | 0.37 | X | X* | | | | | | |
| | 20.59 | 85 | 655 | 0.88 | 0.58 | 0.44 | 0.29 | X* | X* | | | | | | |
| | **23.13** | 76 | 690 | 0.83 | 0.55 | 0.42 | 0.27 | X* | | | | | | | |
| | **24.39** | 72 | 788 | 0.90 | 0.59 | 0.45 | 0.30 | X* | X* | | | | | | |
| | **27.52** | 64 | 770 | 0.78 | 0.52 | 0.39 | 0.26 | X* | | | | | | | |
| | **29.61** | 59 | 814 | 0.76 | 0.50 | 0.38 | 0.25 | X* | X* | | | | | | |
| | **33.42** | 52 | 850 | 0.70 | 0.46 | 0.35 | 0.23 | X* | | | | | | | |
| | **41.58** | 42 | 876 | 0.58 | 0.39 | 0.29 | 0.19 | X* | | | | | | | |
| | **53.68** | 33 | 788 | 0.41 | 0.27 | 0.21 | 0.14 | X* | | | | | | | |
| | **61.27** | 29 | 788 | 0.36 | 0.24 | 0.18 | 0.12 | X* | | | | | | | |
| | **73.06** | 24 | 788 | 0.30 | 0.20 | 0.15 | 0.10 | X* | | | | | | | |
| **SK 03** | **65.50** | 27 | 974 | 0.33 | 0.22 | 0.17 | 0.11 | X* | | | | | | | |
| | **81.50** | 21 | 938 | 0.31 | 0.21 | 0.16 | 0.10 | X* | | | | | | | |
| | **104.77** | 17 | 841 | 0.23 | 0.15 | 0.11 | 0.07 | X* | | | | | | | |
| | **124.62** | 14 | 938 | 0.21 | 0.14 | 0.10 | 0.07 | X* | | | | | | | |
| | **151.33** | 12 | 974 | 0.19 | 0.12 | 0.09 | 0.06 | X* | | | | | | | |
| | **170.75** | 10 | 956 | 0.15 | 0.10 | 0.08 | 0.05 | X* | | | | | | | |
| | **212.47** | 8.2 | 938 | 0.12 | 0.08 | 0.06 | 0.04 | X* | | | | | | | |
| | **274.28** | 6.4 | 788 | 0.08 | 0.05 | 0.04 | 0.03 | X* | | | | | | | |
| | **313.11** | 5.6 | 788 | 0.07 | 0.05 | 0.03 | 0.02 | X* | | | | | | | |

* Caution - The motor power may exceed the gear unit's mechanical torque capacity
◈ The mechanical power limit of the solid input shaft type "W" may limit the reducer rating.
All ratings are mechanical. See page 14 for thermal considerations.

| lb | W | 56C | 140TC |
|---|---|---|---|
| **SK 02** | 26 | 29 | 37 |
| **SK 03** | 35 | 37 | – |


Send Quote Requests to info@automatedpt.com
Call +1(800)985-6929 To Order or Order Online At Nordgearmotors.com

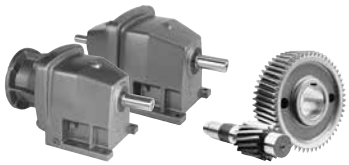

# SK 11E , SK 12
# NEMA-C + W
# Ratings & Combinations



| Model Type | Gear Ratio $i_{tot}$ | Output Speed $n_2$ 1750 rpm [rpm] | Output Torque* $T_{2\,max}$ [lb-in] | Maximum input power◈ Solid input shafts type "W" Input Speed 1750 rpm [hp] | 1150 rpm [hp] | 875 rpm [hp] | 580 rpm [hp] | NEMA C-Face* Available Combinations 56C | 140TC | 180TC | 210TC | 250TC | 280TC | 320TC | 360TC |
|---|---|---|---|---|---|---|---|---|---|---|---|---|---|---|---|
| **SK 11E** | 1.35 | 1296 | 443 | 5.00 | 3.30 | 2.50 | 1.65 | X | X | X | | | | | |
| | 1.54 | 1136 | 443 | 5.00 | 3.30 | 2.50 | 1.65 | X | X | X | | | | | |
| | 1.81 | 967 | 487 | 5.00 | 3.30 | 2.50 | 1.65 | X | X | X | | | | | |
| | 2.04 | 858 | 513 | 5.00 | 3.30 | 2.50 | 1.65 | X | X | X | | | | | |
| | 2.32 | 754 | 425 | 5.00 | 3.30 | 2.50 | 1.65 | X | X | X | | | | | |
| | 2.83 | 618 | 478 | 4.69 | 3.09 | 2.34 | 1.55 | X | X | X* | | | | | |
| | 3.18 | 550 | 354 | 3.09 | 2.04 | 1.54 | 1.02 | X | X | | | | | | |
| | 3.60 | 486 | 372 | 2.87 | 1.89 | 1.43 | 0.95 | X | X | | | | | | |
| | **8.10** | 216 | 266 | 0.91 | 0.60 | 0.45 | 0.30 | X* | X* | | | | | | |
| | **9.11** | 192 | 204 | 0.62 | 0.41 | 0.31 | 0.20 | X* | | | | | | | |
| **SK 12** | 2.96 | 591 | 929 | 5.00 | 3.30 | 2.50 | 1.65 | X | X | X | | | | | |
| | 3.39 | 516 | 965 | 5.00 | 3.30 | 2.50 | 1.65 | X | X | X | | | | | |
| | 3.98 | 440 | 1009 | 5.00 | 3.30 | 2.50 | 1.65 | X | X | X | | | | | |
| | 4.32 | 405 | 991 | 5.00 | 3.30 | 2.50 | 1.65 | X | X | X | | | | | |
| | 4.49 | 390 | 1044 | 5.00 | 3.30 | 2.50 | 1.65 | X | X | X | | | | | |
| | 4.93 | 355 | 1027 | 5.00 | 3.30 | 2.50 | 1.65 | X | X | X | | | | | |
| | 5.79 | 302 | 1080 | 5.00 | 3.30 | 2.50 | 1.65 | X | X | X | | | | | |
| | 6.53 | 268 | 1115 | 4.74 | 3.13 | 2.37 | 1.56 | X | X | X* | | | | | |
| | 7.28 | 240 | 1097 | 4.18 | 2.76 | 2.09 | 1.38 | X | X | X* | | | | | |
| | 7.85 | 223 | 1159 | 4.10 | 2.71 | 2.05 | 1.35 | X | X | X* | | | | | |
| | 8.56 | 204 | 1151 | 3.72 | 2.46 | 1.86 | 1.23 | X | X | X* | | | | | |
| | 9.65 | 181 | 1195 | 3.43 | 2.26 | 1.72 | 1.13 | X | X | X* | | | | | |
| | 10.70 | 164 | 1186 | 3.09 | 2.04 | 1.54 | 1.02 | X | X | X* | | | | | |
| | 13.39 | 131 | 1319 | 2.74 | 1.81 | 1.37 | 0.90 | X | X | X* | | | | | |
| | 16.73 | 105 | 1363 | 2.27 | 1.50 | 1.14 | 0.75 | X | X | X* | | | | | |
| | 18.79 | 93 | 1425 | 2.10 | 1.39 | 1.05 | 0.69 | X | X | | | | | | |
| | 21.28 | 82 | 1478 | 1.92 | 1.27 | 0.96 | 0.63 | X | X* | | | | | | |
| | **25.92** | 68 | 1212 | 1.31 | 0.86 | 0.65 | 0.43 | X | X* | | | | | | |
| | **29.15** | 60 | 1097 | 1.04 | 0.69 | 0.52 | 0.34 | X | | | | | | | |
| | **31.19** | 56 | 1460 | 1.30 | 0.86 | 0.65 | 0.43 | X | X* | | | | | | |
| | **35.07** | 50 | 1319 | 1.05 | 0.69 | 0.52 | 0.35 | X | | | | | | | |
| | **38.31** | 46 | 1628 | 1.19 | 0.78 | 0.59 | 0.39 | X | X* | | | | | | |
| | **43.09** | 41 | 1434 | 0.93 | 0.62 | 0.47 | 0.31 | X* | | | | | | | |
| | **47.87** | 37 | 1566 | 0.92 | 0.61 | 0.46 | 0.30 | X* | X* | | | | | | |
| | **53.84** | 33 | 1558 | 0.82 | 0.54 | 0.41 | 0.27 | X* | | | | | | | |
| | **61.35** | 29 | 1363 | 0.63 | 0.41 | 0.31 | 0.21 | X* | | | | | | | |
| | **72.63** | 24 | 1230 | 0.47 | 0.31 | 0.23 | 0.15 | X* | | | | | | | |

* Caution - The motor power may exceed the gear unit's mechanical torque capacity
◈ The mechanical power limit of the solid input shaft type "W" may limit the reducer rating.
All ratings are mechanical. See page 14 for thermal considerations.

| lb | W | 56C | 140TC | 180TC |
|---|---|---|---|---|
| **SK 11E** | 22 | 24 | 33 | 49 |
| **SK 12** | 31 | 33 | 42 | 57 |


Send Quote Requests to info@automatedpt.com
Call +1(800)985-6929 To Order or Order Online At Nordgearmotors.com

Send Quote Requests to info@automatedpt.com Call +1(800)985-6929 To Order or Order Online At Nordgearmotors.com

# SK 13, SK 12/02 NEMA-C + W Ratings & Combinations

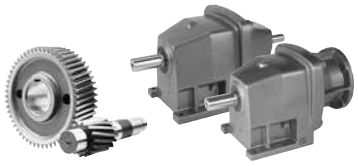



| Model Type | Gear Ratio | Output Speed | Output Torque* | Maximum input power◈ Solid input shafts type "W" | | | | NEMA C-Face* Available Combinations | | | | | | | |
|---|---|---|---|---|---|---|---|---|---|---|---|---|---|---|---|
| | | | | Input Speed | | | | | | | | | | | |
| | $i_{tot}$ | $n_2$ 1750 rpm | $T_{2\ max}$ | 1750 rpm | 1150 rpm | 875 rpm | 580 rpm | | | | | | | | |
| | | [rpm] | [lb-in] | [hp] | [hp] | [hp] | [hp] | 56C | 140TC | 180TC | 210TC | 250TC | 280TC | 320TC | 360TC |
| **SK 13** | **68.40** | 26 | 1735 | 0.50 | 0.33 | 0.25 | 0.17 | X* | | | | | | | |
| | **85.47** | 20 | 1558 | 0.49 | 0.33 | 0.25 | 0.16 | X* | | | | | | | |
| | **108.72** | 16 | 1566 | 0.40 | 0.26 | 0.20 | 0.13 | X* | | | | | | | |
| | **132.45** | 13 | 1310 | 0.27 | 0.18 | 0.14 | 0.09 | X* | | | | | | | |
| | **159.36** | 11 | 1478 | 0.26 | 0.17 | 0.13 | 0.09 | X* | | | | | | | |
| | **195.78** | 8.9 | 1717 | 0.24 | 0.16 | 0.12 | 0.08 | X* | | | | | | | |
| | **244.62** | 7.2 | 1566 | 0.18 | 0.12 | 0.09 | 0.06 | X* | | | | | | | |
| | **275.12** | 6.4 | 1558 | 0.16 | 0.10 | 0.08 | 0.05 | X* | | | | | | | |
| | **313.48** | 5.6 | 1478 | 0.13 | 0.09 | 0.07 | 0.04 | X* | | | | | | | |
| | **369.34** | 4.7 | 1558 | 0.12 | 0.08 | 0.06 | 0.04 | X* | | | | | | | |
| | **420.83** | 4.2 | 1478 | 0.10 | 0.07 | 0.05 | 0.03 | X* | | | | | | | |
| **SK 12/02** | 92.89 | 19 | 1451 | 0.49 | 0.32 | 0.25 | 0.16 | X* | X* | | | | | | |
| | 109.66 | 16 | 1451 | 0.42 | 0.28 | 0.21 | 0.14 | X* | X* | | | | | | |
| | 133.23 | 13 | 1451 | 0.35 | 0.23 | 0.18 | 0.12 | X* | X* | | | | | | |
| | 165.77 | 11 | 1593 | 0.33 | 0.22 | 0.17 | 0.11 | X* | X* | | | | | | |
| | 213.39 | 8.2 | 1593 | 0.26 | 0.17 | 0.13 | 0.09 | X* | X* | | | | | | |
| | 263.96 | 6.6 | 1593 | 0.22 | 0.15 | 0.11 | 0.07 | X* | X* | | | | | | |
| | 339.81 | 5.1 | 1593 | 0.18 | 0.12 | 0.09 | 0.06 | X* | X* | | | | | | |
| | 431.75 | 4.1 | 1593 | 0.16 | 0.10 | 0.08 | 0.05 | X* | X* | | | | | | |
| | 537.49 | 3.3 | 1593 | 0.14 | 0.09 | 0.07 | 0.05 | X* | X* | | | | | | |
| | **619.86** | 2.8 | 1593 | 0.12 | 0.08 | 0.06 | 0.04 | X* | | | | | | | |
| | **886.11** | 2 | 1593 | 0.10 | 0.07 | 0.05 | 0.03 | X* | | | | | | | |
| | **1054.29** | 1.7 | 1593 | 0.10 | 0.06 | 0.05 | 0.03 | X* | | | | | | | |
| | **1280.32** | 1.4 | 1593 | 0.09 | 0.06 | 0.04 | 0.03 | X* | | | | | | | |
| | **1592.93** | 1.1 | 1593 | 0.08 | 0.05 | 0.04 | 0.03 | X* | | | | | | | |
| | **2056.68** | 0.85 | 1593 | 0.08 | 0.05 | 0.04 | 0.02 | X* | | | | | | | |
| | **2798.93** | 0.63 | 1593 | 0.07 | 0.05 | 0.03 | 0.02 | X* | | | | | | | |

* Caution - The motor power may exceed the gear unit's mechanical torque capacity
◈ The mechanical power limit of the solid input shaft type "W" may limit the reducer rating.
All ratings are mechanical. See page 14 for thermal considerations.

| lb | W | 56C | 140TC |
|---|---|---|---|
| **SK 12/02** | 49 | 51 | 60 |
| **SK 13** | 42 | 44 | – |


Send Quote Requests to info@automatedpt.com
Call +1(800)985-6929 To Order or Order Online At Nordgearmotors.com

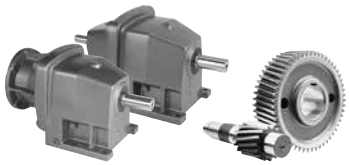

# SK 21E, SK 22
# NEMA-C + W
# Ratings & Combinations



| Model Type | Gear Ratio $i_{tot}$ | Output Speed $n_2$ 1750 rpm [rpm] | Output Torque* $T_{2\,max}$ [lb-in] | Maximum input power◈ Solid input shafts type "W" Input Speed 1750 rpm [hp] | 1150 rpm [hp] | 875 rpm [hp] | 580 rpm [hp] | NEMA C-Face* Available Combinations 56C | 140TC | 180TC | 210TC | 250TC | 280TC | 320TC | 360TC |
|---|---|---|---|---|---|---|---|---|---|---|---|---|---|---|---|
| **SK 21E** | 1.46 | 1199 | 531 | 5.00 | 3.30 | 2.50 | 1.65 | X | X | X | | | | | |
| | 1.85 | 946 | 566 | 5.00 | 3.30 | 2.50 | 1.65 | X | X | X | | | | | |
| | 2.08 | 841 | 602 | 5.00 | 3.30 | 2.50 | 1.65 | X | X | X | | | | | |
| | 2.42 | 723 | 646 | 5.00 | 3.30 | 2.50 | 1.65 | X | X | X | | | | | |
| | 2.71 | 646 | 681 | 5.00 | 3.30 | 2.50 | 1.65 | X | X | X | | | | | |
| | 3.09 | 566 | 549 | 4.93 | 3.25 | 2.46 | 1.63 | X | X | X* | | | | | |
| | 3.67 | 477 | 602 | 4.55 | 3.01 | 2.28 | 1.50 | X | X | X* | | | | | |
| | 4.60 | 380 | 496 | 2.99 | 1.97 | 1.49 | 0.99 | X | X | | | | | | |
| | **6.40** | 273 | 575 | 2.49 | 1.64 | 1.25 | 0.82 | X | X | X* | | | | | |
| | **7.90** | 222 | 531 | 1.87 | 1.23 | 0.94 | 0.62 | X | X* | | | | | | |
| | **10.20** | 172 | 354 | 0.97 | 0.64 | 0.48 | 0.32 | X* | X* | | | | | | |
| **SK 22** | 2.79 | 627 | 1018 | 5.00 | 3.30 | 2.50 | 1.65 | X | X | X | | | | | |
| | 3.53 | 496 | 1159 | 5.00 | 3.30 | 2.50 | 1.65 | X | X | X | | | | | |
| | 3.97 | 441 | 1230 | 5.00 | 3.30 | 2.50 | 1.65 | X | X | X | | | | | |
| | 4.62 | 379 | 1328 | 5.00 | 3.30 | 2.50 | 1.65 | X | X | X | | | | | |
| | 5.18 | 338 | 1407 | 5.00 | 3.30 | 2.50 | 1.65 | X | X | X | | | | | |
| | 5.79 | 302 | 1903 | 5.00 | 3.30 | 2.50 | 1.65 | X | X | X | | | | | |
| | 6.51 | 269 | 2018 | 5.00 | 3.30 | 2.50 | 1.65 | X | X | X | | | | | |
| | 6.86 | 255 | 2257 | 5.00 | 3.30 | 2.50 | 1.65 | X | X | X | | | | | |
| | 7.57 | 231 | 2177 | 5.00 | 3.30 | 2.50 | 1.65 | X | X | X | | | | | |
| | 8.48 | 206 | 2292 | 5.00 | 3.30 | 2.50 | 1.65 | X | X | X | | | | | |
| | 10.89 | 161 | 2805 | 5.00 | 3.30 | 2.50 | 1.65 | X | X | X | | | | | |
| | 12.20 | 143 | 2912 | 5.00 | 3.30 | 2.50 | 1.65 | X | X | X | | | | | |
| | 14.69 | 119 | 2982 | 5.00 | 3.30 | 2.50 | 1.65 | X | X | X | | | | | |
| | 16.75 | 104 | 3000 | 4.95 | 3.27 | 2.48 | 1.63 | X | X | X* | | | | | |
| | **20.03** | 87 | 2522 | 3.48 | 2.30 | 1.74 | 1.15 | X | X | X* | | | | | |
| | **23.74** | 74 | 2885 | 3.39 | 2.24 | 1.69 | 1.12 | X | X | X* | | | | | |
| | **24.73** | 71 | 2177 | 2.45 | 1.62 | 1.23 | 0.81 | X | X | | | | | | |
| | **28.80** | 61 | 3310 | 3.20 | 2.11 | 1.60 | 1.06 | X | X | X* | | | | | |
| | **29.31** | 60 | 2584 | 2.46 | 1.62 | 1.23 | 0.81 | X | X | | | | | | |
| | **34.69** | 50 | 3009 | 2.39 | 1.58 | 1.19 | 0.79 | X | X | X* | | | | | |
| | **35.55** | 49 | 2921 | 2.27 | 1.50 | 1.14 | 0.75 | X | X | | | | | | |
| | **42.82** | 41 | 3009 | 1.96 | 1.29 | 0.98 | 0.65 | X | X* | | | | | | |
| | **45.90** | 38 | 2584 | 1.56 | 1.03 | 0.78 | 0.51 | X | X* | | | | | | |
| | **55.28** | 32 | 2832 | 1.44 | 0.95 | 0.72 | 0.47 | X | X* | | | | | | |
| | **69.81** | 25 | 2328 | 0.92 | 0.61 | 0.46 | 0.30 | X* | X* | | | | | | |
| | **86.30** | 20 | 2213 | 0.70 | 0.46 | 0.35 | 0.23 | X* | X* | | | | | | |

* Caution - The motor power may exceed the gear unit's mechanical torque capacity
◈ The mechanical power limit of the solid input shaft type "W" may limit the reducer rating.
All ratings are mechanical. See page 14 for thermal considerations.

| lb | W | 56C | 140TC | 180TC |
|---|---|---|---|---|
| **SK 21E** | 49 | 44 | 53 | 62 |
| **SK 22** | 64 | 60 | 69 | 77 |


Send Quote Requests to info@automatedpt.com
Call +1(800)985-6929 To Order or Order Online At Nordgearmotors.com

# SK 23, SK 22/02
# NEMA-C + W
# Ratings & Combinations

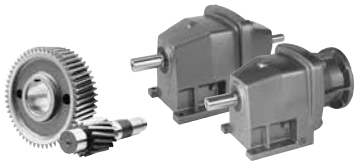

DRIVESYSTEMS

W + NEMA

| Model Type | Gear Ratio | Output Speed | Output Torque* | Maximum input power◈ Solid input shafts type "W" | | | | NEMA C-Face* Available Combinations | | | | | | | |
|---|---|---|---|---|---|---|---|---|---|---|---|---|---|---|---|
| | | | | Input Speed | | | | | | | | | | | |
| | $i_{tot}$ | $n_2$ 1750 rpm | $T_{2\ max}$ | 1750 rpm | 1150 rpm | 875 rpm | 580 rpm | | | | | | | | |
| | | [rpm] | [lb-in] | [hp] | [hp] | [hp] | [hp] | 56C | 140TC | 180TC | 210TC | 250TC | 280TC | 320TC | 360TC |
| **SK 23** | 64.80 | 27 | 3009 | 1.00 | 0.66 | 0.50 | 0.33 | X | X* | | | | | | |
| | 78.05 | 22 | 3009 | 1.00 | 0.66 | 0.50 | 0.33 | X | X* | | | | | | |
| | 88.45 | 20 | 3009 | 0.95 | 0.63 | 0.48 | 0.32 | X* | X* | | | | | | |
| | 100.60 | 17 | 3009 | 0.81 | 0.54 | 0.41 | 0.27 | X* | X* | | | | | | |
| | 124.17 | 14 | 3009 | 0.67 | 0.44 | 0.33 | 0.22 | X* | X* | | | | | | |
| | **151.44** | 12 | 2602 | 0.50 | 0.33 | 0.25 | 0.16 | X* | | | | | | | |
| | **179.50** | 9.7 | 2761 | 0.42 | 0.28 | 0.21 | 0.14 | X* | | | | | | | |
| | **217.73** | 8 | 3009 | 0.38 | 0.25 | 0.19 | 0.13 | X* | | | | | | | |
| | **262.24** | 6.7 | 3009 | 0.32 | 0.21 | 0.16 | 0.11 | X* | | | | | | | |
| | **323.70** | 5.4 | 3009 | 0.26 | 0.17 | 0.13 | 0.09 | X* | | | | | | | |
| | **417.95** | 4.2 | 3009 | 0.20 | 0.13 | 0.10 | 0.07 | X* | | | | | | | |
| | **516.65** | 3.4 | 2425 | 0.13 | 0.09 | 0.07 | 0.04 | X* | | | | | | | |
| **SK 22/02** | 117.25 | 15 | 3009 | 0.75 | 0.50 | 0.38 | 0.25 | X* | X* | | | | | | |
| | 134.94 | 13 | 3009 | 0.67 | 0.45 | 0.34 | 0.22 | X* | X* | | | | | | |
| | 167.21 | 10 | 3009 | 0.53 | 0.35 | 0.27 | 0.18 | X* | X* | | | | | | |
| | 239.01 | 7.3 | 3009 | 0.40 | 0.27 | 0.20 | 0.13 | X* | X* | | | | | | |
| | 284.11 | 6.2 | 3009 | 0.35 | 0.23 | 0.17 | 0.12 | X* | X* | | | | | | |
| | 345.17 | 5.1 | 3009 | 0.30 | 0.20 | 0.15 | 0.10 | X* | X* | | | | | | |
| | 444.73 | 3.9 | 3009 | 0.24 | 0.16 | 0.12 | 0.08 | X* | X* | | | | | | |
| | 553.31 | 3.2 | 3009 | 0.21 | 0.14 | 0.10 | 0.07 | X* | X* | | | | | | |
| | 682.98 | 2.6 | 3009 | 0.18 | 0.12 | 0.09 | 0.06 | X* | X* | | | | | | |
| | 881.66 | 2 | 3009 | 0.15 | 0.10 | 0.07 | 0.05 | X* | X* | | | | | | |
| | **1159.34** | 1.5 | 3009 | 0.13 | 0.08 | 0.06 | 0.04 | X* | | | | | | | |
| | **1442.41** | 1.2 | 3009 | 0.11 | 0.07 | 0.06 | 0.04 | X* | | | | | | | |
| | **1780.46** | 0.98 | 3009 | 0.10 | 0.07 | 0.05 | 0.03 | X* | | | | | | | |
| | **2125.46** | 0.82 | 3009 | 0.09 | 0.06 | 0.05 | 0.03 | X* | | | | | | | |
| | **2534.45** | 0.69 | 3009 | 0.09 | 0.06 | 0.04 | 0.03 | X* | | | | | | | |

* Caution - The motor power may exceed the gear unit's mechanical torque capacity
◈ The mechanical power limit of the solid input shaft type "W" may limit the reducer rating.
All ratings are mechanical. See page 14 for thermal considerations.

| lb | W | 56C | 140TC |
|---|---|---|---|
| **SK 23** | 68 | 71 | 79 |
| **SK 22/02** | 77 | 79 | 88 |


Send Quote Requests to info@automatedpt.com
Call +1(800)985-6929 To Order or Order Online At Nordgearmotors.com

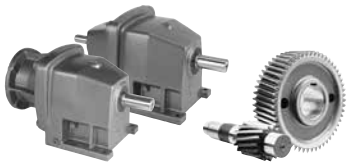

# SK 31E , SK 32
# NEMA-C + W
# Ratings & Combinations



| Model Type | Gear Ratio $i_{tot}$ | Output Speed $n_2$ 1750 rpm [rpm] | Output Torque* $T_{2\,max}$ [lb-in] | Maximum input power◈ Solid input shafts type "W" Input Speed 1750 rpm [hp] | 1150 rpm [hp] | 875 rpm [hp] | 580 rpm [hp] | NEMA C-Face* Available Combinations 56C | 140TC | 180TC | 210TC | 250TC | 280TC | 320TC | 360TC |
|---|---|---|---|---|---|---|---|---|---|---|---|---|---|---|---|
| **SK 31E** | 1.39 | 1259 | 1266 | 10.00 | 6.60 | 5.00 | 3.30 | | | X | X* | | | | |
| | 1.76 | 994 | 1328 | 10.00 | 6.60 | 5.00 | 3.30 | X | X | X | X* | | | | |
| | 2.08 | 841 | 1460 | 10.00 | 6.60 | 5.00 | 3.30 | X | X | X | X* | | | | |
| | 2.58 | 678 | 1637 | 10.00 | 6.60 | 5.00 | 3.30 | X | X | X | X* | | | | |
| | 3.31 | 529 | 929 | 7.80 | 5.15 | 3.90 | 2.57 | X | X | X | X* | | | | |
| | 3.67 | 477 | 974 | 7.37 | 4.86 | 3.68 | 2.43 | X | X | X | X* | | | | |
| | 4.83 | 362 | 867 | 4.98 | 3.29 | 2.49 | 1.64 | X | X | X* | | | | | |
| | **8.20** | 213 | 929 | 3.14 | 2.07 | 1.57 | 1.04 | X | X | X* | | | | | |
| | **10.20** | 172 | 797 | 2.17 | 1.43 | 1.09 | 0.72 | X | X | | | | | | |
| **SK 32** | 2.96 | 591 | 3859 | 10.00 | 6.60 | 5.00 | 3.30 | X | X | X | X | | | | |
| | 3.75 | 467 | 4062 | 10.00 | 6.60 | 5.00 | 3.30 | X | X | X | X | | | | |
| | 4.43 | 395 | 4098 | 10.00 | 6.60 | 5.00 | 3.30 | X | X | X | X | | | | |
| | 5.28 | 331 | 5655 | 10.00 | 6.60 | 5.00 | 3.30 | X | X | X | X | | | | |
| | 5.50 | 318 | 3965 | 10.00 | 6.60 | 5.00 | 3.30 | X | X | X | X | | | | |
| | 5.70 | 307 | 5345 | 10.00 | 6.60 | 5.00 | 3.30 | X | X | X | X | | | | |
| | 6.74 | 260 | 5345 | 10.00 | 6.60 | 5.00 | 3.30 | X | X | X | X | | | | |
| | 7.05 | 248 | 2106 | 8.29 | 5.47 | 4.14 | 2.74 | X | X | X | X* | | | | |
| | 7.90 | 222 | 5797 | 10.00 | 6.60 | 5.00 | 3.30 | X | X | X | X | | | | |
| | 8.36 | 209 | 5283 | 10.00 | 6.60 | 5.00 | 3.30 | X | X | X | X | | | | |
| | 9.80 | 179 | 5726 | 10.00 | 6.60 | 5.00 | 3.30 | X | X | X | X | | | | |
| | 11.71 | 149 | 6284 | 10.00 | 6.60 | 5.00 | 3.30 | X | X | X | X | | | | |
| | 14.55 | 120 | 5947 | 10.00 | 6.60 | 5.00 | 3.30 | X | X | X | X | | | | |
| | 15.03 | 116 | 4496 | 8.27 | 5.46 | 4.14 | 2.73 | X | X | X | X* | | | | |
| | 16.25 | 108 | 5655 | 9.69 | 6.40 | 4.85 | 3.20 | X | X | X | X* | | | | |
| | 16.66 | 105 | 4691 | 7.81 | 5.16 | 3.91 | 2.58 | X | X | X | X* | | | | |
| | 18.67 | 94 | 5584 | 8.33 | 5.50 | 4.16 | 2.75 | X | X | X | X* | | | | |
| | 20.70 | 85 | 5823 | 7.85 | 5.18 | 3.93 | 2.59 | X | X | X | X* | | | | |
| | 23.12 | 76 | 5576 | 6.72 | 4.44 | 3.36 | 2.22 | X | X | X | X* | | | | |
| | **26.57** | 66 | 3859 | 4.04 | 2.67 | 2.02 | 1.33 | X | X | X* | | | | | |
| | 27.24 | 64 | 5328 | 5.41 | 3.57 | 2.71 | 1.79 | X | X | X | | | | | |
| | 30.43 | 58 | 5655 | 5.20 | 3.43 | 2.60 | 1.72 | X | X | X | | | | | |
| | **31.16** | 56 | 4531 | 4.03 | 2.66 | 2.01 | 1.33 | X | X | X* | | | | | |
| | **33.05** | 53 | 3363 | 2.83 | 1.87 | 1.41 | 0.93 | X | X | | | | | | |
| | **37.23** | 47 | 5213 | 3.89 | 2.57 | 1.94 | 1.28 | X | X | X* | | | | | |
| | **38.76** | 45 | 3947 | 2.82 | 1.86 | 1.41 | 0.93 | X | X | | | | | | |
| | **46.25** | 38 | 5947 | 3.59 | 2.37 | 1.79 | 1.18 | X | X | X* | | | | | |
| | **46.31** | 38 | 4717 | 2.84 | 1.88 | 1.42 | 0.94 | X | X | | | | | | |
| | **57.53** | 30 | 5425 | 2.58 | 1.70 | 1.29 | 0.85 | X | X | | | | | | |
| | **64.26** | 27 | 5664 | 2.43 | 1.60 | 1.21 | 0.80 | X | X | | | | | | |
| | **72.76** | 24 | 4956 | 1.89 | 1.25 | 0.94 | 0.62 | X | X* | | | | | | |
| | **81.27** | 22 | 4558 | 1.59 | 1.05 | 0.80 | 0.53 | X | X* | | | | | | |

* Caution - The motor power may exceed the gear unit's mechanical torque capacity
◈ The mechanical power limit of the solid input shaft type "W" may limit the reducer rating.
All ratings are mechanical. See page 14 for thermal considerations.

| lb | W | 56C | 140TC | 180TC | 210TC |
|---|---|---|---|---|---|
| **SK 31E** | 60 | 55 | 64 | 73 | 73 |
| **SK 32** | 88 | 84 | 93 | 101 | 101 |


Send Quote Requests to info@automatedpt.com
Call +1(800)985-6929 To Order or Order Online At Nordgearmotors.com

# SK 33, SK 32/12
# NEMA-C + W
# Ratings & Combinations

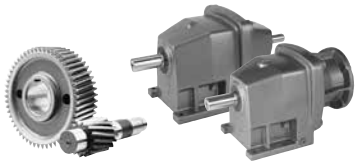

DRIVESYSTEMS

W + NEMA

| Model Type | Gear Ratio | Output Speed | Output Torque* | Maximum input power◈ Solid input shafts type "W" | | | | NEMA C-Face* Available Combinations | | | | | | | |
|---|---|---|---|---|---|---|---|---|---|---|---|---|---|---|---|
| | | | | Input Speed | | | | | | | | | | | |
| | $i_{tot}$ | $n_2$ 1750 rpm | $T_{2\ max}$ | 1750 rpm | 1150 rpm | 875 rpm | 580 rpm | | | | | | | | |
| | | [rpm] | [lb-in] | [hp] | [hp] | [hp] | [hp] | 56C | 140TC | 180TC | 210TC | 250TC | 280TC | 320TC | 360TC |
| **SK 33N** | 88.18 | 20 | 4752 | 1.50 | 0.99 | 0.75 | 0.50 | X | X* | | | | | | |
| | 112.18 | 16 | 4850 | 1.23 | 0.81 | 0.62 | 0.41 | X | X* | | | | | | |
| | 134.02 | 13 | 5761 | 1.19 | 0.78 | 0.59 | 0.39 | X | X* | | | | | | |
| | 166.49 | 11 | 5947 | 1.04 | 0.69 | 0.52 | 0.34 | X | X* | | | | | | |
| | 207.10 | 8.5 | 5947 | 0.80 | 0.53 | 0.40 | 0.26 | X* | X* | | | | | | |
| | **248.17** | 7.1 | 5947 | 0.67 | 0.44 | 0.33 | 0.22 | X* | | | | | | | |
| | **339.15** | 5.2 | 5761 | 0.48 | 0.31 | 0.24 | 0.16 | X* | | | | | | | |
| | **421.32** | 4.2 | 5947 | 0.40 | 0.26 | 0.20 | 0.13 | X* | | | | | | | |
| | **524.08** | 3.3 | 5947 | 0.31 | 0.21 | 0.16 | 0.10 | X* | | | | | | | |
| | **585.41** | 3 | 5611 | 0.27 | 0.18 | 0.13 | 0.09 | X* | | | | | | | |
| | **662.81** | 2.6 | 4956 | 0.20 | 0.13 | 0.10 | 0.07 | X* | | | | | | | |
| | **740.37** | 2.4 | 5045 | 0.19 | 0.13 | 0.10 | 0.06 | X* | | | | | | | |
| **SK 32/12** | 126.21 | 14 | 5487 | 1.22 | 0.80 | 0.61 | 0.40 | X | X* | X* | | | | | |
| | 148.18 | 12 | 5487 | 1.04 | 0.69 | 0.52 | 0.34 | X | X* | X* | | | | | |
| | 167.16 | 10 | 5487 | 0.92 | 0.61 | 0.46 | 0.31 | X | X* | X* | | | | | |
| | 215.56 | 8.1 | 5487 | 0.76 | 0.50 | 0.38 | 0.25 | X* | X* | X* | | | | | |
| | 267.79 | 6.5 | 5487 | 0.62 | 0.41 | 0.31 | 0.20 | X* | X* | X* | | | | | |
| | 363.06 | 4.8 | 5487 | 0.47 | 0.31 | 0.24 | 0.16 | X* | X* | X* | | | | | |
| | 446.31 | 3.9 | 5487 | 0.39 | 0.26 | 0.20 | 0.13 | X* | X* | X* | | | | | |
| | 554.68 | 3.2 | 5487 | 0.33 | 0.22 | 0.17 | 0.11 | X* | X* | X* | | | | | |
| | 699.55 | 2.5 | 5487 | 0.27 | 0.18 | 0.14 | 0.09 | X* | X* | | | | | | |
| | 869.04 | 2 | 5487 | 0.23 | 0.15 | 0.11 | 0.08 | X* | X* | | | | | | |
| | 1080.05 | 1.6 | 5487 | 0.19 | 0.13 | 0.10 | 0.06 | X* | X* | | | | | | |
| | **1305.66** | 1.3 | 5487 | 0.17 | 0.11 | 0.08 | 0.06 | X* | | | | | | | |
| | **1604.24** | 1.1 | 5487 | 0.15 | 0.10 | 0.07 | 0.05 | X* | | | | | | | |
| | **2004.46** | 0.87 | 5487 | 0.13 | 0.09 | 0.06 | 0.04 | X* | | | | | | | |
| | **2704.02** | 0.65 | 5487 | 0.11 | 0.07 | 0.06 | 0.04 | X* | | | | | | | |

* Caution - The motor power may exceed the gear unit's mechanical torque capacity
◈ The mechanical power limit of the solid input shaft type "W" may limit the reducer rating.
All ratings are mechanical. See page 14 for thermal considerations.

| lb | W | 56C | 140TC | 180TC |
|---|---|---|---|---|
| **SK 33N** | 60 | 97 | 106 | – |
| **SK 32/12** | 88 | 108 | 117 | 132 |


Send Quote Requests to info@automatedpt.com
Call +1(800)985-6929 To Order or Order Online At Nordgearmotors.com

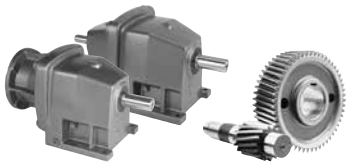

# SK 41E , SK 42
# NEMA-C + W
# Ratings & Combinations



| Model Type | Gear Ratio $i_{tot}$ | Output Speed $n_2$ 1750 rpm [rpm] | Output Torque* $T_{2\,max}$ [lb-in] | Maximum input power◈ Solid input shafts type "W" Input Speed 1750 rpm [hp] | 1150 rpm [hp] | 875 rpm [hp] | 580 rpm [hp] | NEMA C-Face* Available Combinations 56C | 140TC | 180TC | 210TC | 250TC | 280TC | 320TC | 360TC |
|---|---|---|---|---|---|---|---|---|---|---|---|---|---|---|---|
| **SK 41E** | 1.41 | 1241 | 1593 | 20.00 | 13.20 | 10.00 | 6.60 | | | X | X | X | | | |
| | 1.50 | 1167 | 1682 | 20.00 | 13.20 | 10.00 | 6.60 | | | X | X | X | | | |
| | 1.63 | 1074 | 1770 | 20.00 | 13.20 | 10.00 | 6.60 | | | X | X | X | | | |
| | 1.82 | 962 | 1974 | 20.00 | 13.20 | 10.00 | 6.60 | X | X | X | X | X | | | |
| | 2.14 | 818 | 2195 | 20.00 | 13.20 | 10.00 | 6.60 | X | X | X | X | X | | | |
| | 2.50 | 700 | 2398 | 20.00 | 13.20 | 10.00 | 6.60 | X | X | X | X | X | | | |
| | 3.08 | 568 | 2567 | 20.00 | 13.20 | 10.00 | 6.60 | X | X | X | X | X | | | |
| | 3.42 | 512 | 1239 | 10.07 | 6.64 | 5.03 | 3.32 | X | X | X | X | | | | |
| | 3.88 | 451 | 1283 | 9.18 | 6.06 | 4.59 | 3.03 | X | X | X | X* | | | | |
| | 4.29 | 408 | 1372 | 8.88 | 5.86 | 4.44 | 2.93 | X | X | X | X* | | | | |
| | **5.27** | 332 | 1726 | 9.09 | 6.00 | 4.55 | 3.00 | | | X | X* | | | | |
| | **7.18** | 244 | 1682 | 6.51 | 4.30 | 3.25 | 2.15 | | | X | X* | | | | |
| | **10.55** | 166 | 1682 | 4.43 | 2.92 | 2.21 | 1.46 | X | X | X* | | | | | |
| | **14.80** | 118 | 1177 | 2.20 | 1.45 | 1.10 | 0.73 | X | X | | | | | | |
| **SK 42** | 3.02 | 579 | 5345 | 20.00 | 13.20 | 10.00 | 6.60 | | | X | X | X | | | |
| | 3.21 | 545 | 5487 | 20.00 | 13.20 | 10.00 | 6.60 | | | X | X | X | | | |
| | 3.50 | 500 | 5885 | 20.00 | 13.20 | 10.00 | 6.60 | | | X | X | X | | | |
| | 3.89 | 450 | 6195 | 20.00 | 13.20 | 10.00 | 6.60 | X | X | X | X | X | | | |
| | 4.58 | 382 | 6832 | 20.00 | 13.20 | 10.00 | 6.60 | X | X | X | X | X | | | |
| | 4.79 | 365 | 8496 | 20.00 | 13.20 | 10.00 | 6.60 | | | X | X | X | | | |
| | 5.10 | 343 | 8708 | 20.00 | 13.20 | 10.00 | 6.60 | | | X | X | X | | | |
| | 5.35 | 327 | 7230 | 20.00 | 13.20 | 10.00 | 6.60 | X | X | X | X | X | | | |
| | 5.75 | 304 | 10036 | 20.00 | 13.20 | 10.00 | 6.60 | | | X | X | X | | | |
| | 6.19 | 283 | 9514 | 20.00 | 13.20 | 10.00 | 6.60 | X | X | X | X | X | | | |
| | 6.65 | 263 | 10293 | 20.00 | 13.20 | 10.00 | 6.60 | | | X | X | X | | | |
| | 7.28 | 240 | 9523 | 20.00 | 13.20 | 10.00 | 6.60 | X | X | X | X | X | | | |
| | 8.50 | 206 | 9523 | 20.00 | 13.20 | 10.00 | 6.60 | X | X | X | X | X | | | |
| | 10.20 | 172 | 10328 | 20.00 | 13.20 | 10.00 | 6.60 | X | X | X | X | X | | | |
| | 12.28 | 143 | 10585 | 20.00 | 13.20 | 10.00 | 6.60 | X | X | X | X | X | | | |
| | 14.38 | 122 | 10248 | 19.84 | 13.09 | 9.92 | 6.55 | X | X | X | X | X* | | | |
| | 15.12 | 116 | 11009 | 20.00 | 13.20 | 10.00 | 6.60 | X | X | X | X | X | | | |
| | 17.71 | 99 | 10496 | 16.49 | 10.88 | 8.24 | 5.44 | X | X | X | X | X* | | | |
| | **17.92** | 98 | 8832 | 13.73 | 9.06 | 6.87 | 4.53 | | | X | X | | | | |
| | **21.50** | 81 | 10293 | 13.23 | 8.73 | 6.61 | 4.37 | | | X | X | | | | |
| | 21.87 | 80 | 9700 | 12.31 | 8.13 | 6.16 | 4.06 | X | X | X | X | X* | | | |
| | **24.41** | 72 | 7593 | 8.67 | 5.73 | 4.34 | 2.86 | | | X | X* | | | | |
| | 24.67 | 71 | 7885 | 8.88 | 5.86 | 4.44 | 2.93 | X | X | X | X* | | | | |
| | **25.88** | 68 | 11001 | 11.87 | 7.83 | 5.93 | 3.92 | | | X | X | | | | |
| | **29.29** | 60 | 9036 | 8.60 | 5.68 | 4.30 | 2.84 | | | X | X* | | | | |
| | 30.46 | 57 | 9540 | 8.63 | 5.69 | 4.31 | 2.85 | X | X | X | X* | | | | |
| | **35.25** | 50 | 10868 | 8.62 | 5.69 | 4.31 | 2.85 | | | X | X* | | | | |
| | **41.29** | 42 | 10496 | 6.99 | 4.62 | 3.50 | 2.31 | | | X | X* | | | | |
| | **50.98** | 34 | 9717 | 5.24 | 3.46 | 2.62 | 1.73 | | | X | X* | | | | |
| | **60.66** | 29 | 8885 | 4.09 | 2.70 | 2.04 | 1.35 | X | X | X* | | | | | |
| | **74.87** | 23 | 9558 | 3.49 | 2.30 | 1.74 | 1.15 | X | X | X* | | | | | |
| | **85.10** | 21 | 7045 | 2.35 | 1.55 | 1.17 | 0.77 | X | X | | | | | | |
| | **105.08** | 17 | 7629 | 2.06 | 1.36 | 1.03 | 0.68 | X | X | | | | | | |

* Caution - The motor power may exceed the gear unit's mechanical torque capacity
◈ The mechanical power limit of the solid input shaft type "W" may limit the reducer rating.
All ratings are mechanical. See page 14 for thermal considerations.

| lb | W | 56C | 140TC | 180TC | 210TC | 250TC |
|---|---|---|---|---|---|---|
| **SK 41E** | 101 | 90 | 106 | 106 | 137 | 159 |
| **SK 42** | 143 | 132 | 148 | 148 | 179 | 201 |


Send Quote Requests to info@automatedpt.com
Call +1(800)985-6929 To Order or Order Online At Nordgearmotors.com

# SK 43, SK 42/12
# NEMA-C + W
# Ratings & Combinations

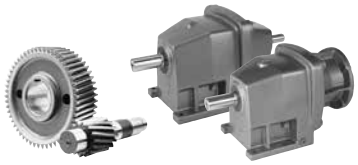

DRIVESYSTEMS

W + NEMA

| Model Type | Gear Ratio | Output Speed | Output Torque* | Maximum input power◈ Solid input shafts type "W" | | | | NEMA C-Face* Available Combinations | | | | | | | |
|---|---|---|---|---|---|---|---|---|---|---|---|---|---|---|---|
| | | | | Input Speed | | | | | | | | | | | |
| | $i_{tot}$ | $n_2$ 1750 rpm | $T_{2\ max}$ | 1750 rpm | 1150 rpm | 875 rpm | 580 rpm | | | | | | | | |
| | | [rpm] | [lb-in] | [hp] | [hp] | [hp] | [hp] | 56C | 140TC | 180TC | 210TC | 250TC | 280TC | 320TC | 360TC |
| **SK 43** | 40.98 | 43 | 9213 | 5.00 | 3.30 | 2.50 | 1.65 | X | X | X | | | | | |
| | 48.56 | 36 | 9248 | 5.00 | 3.30 | 2.50 | 1.65 | X | X | X | | | | | |
| | 58.27 | 30 | 10319 | 4.91 | 3.24 | 2.46 | 1.62 | X | X | X* | | | | | |
| | 70.12 | 25 | 11151 | 4.42 | 2.92 | 2.21 | 1.46 | X | X | X* | | | | | |
| | 79.96 | 22 | 10886 | 3.80 | 2.51 | 1.90 | 1.25 | X | X | X* | | | | | |
| | 94.96 | 18 | 10974 | 3.13 | 2.07 | 1.57 | 1.03 | X | X | X* | | | | | |
| | 107.51 | 16 | 9877 | 2.51 | 1.65 | 1.25 | 0.83 | X | X | X* | | | | | |
| | 129.38 | 14 | 10974 | 2.44 | 1.61 | 1.22 | 0.80 | X | X | X* | | | | | |
| | **141.55** | 12 | 9319 | 1.77 | 1.17 | 0.89 | 0.59 | X | X | | | | | | |
| | **169.86** | 10 | 10319 | 1.64 | 1.08 | 0.82 | 0.54 | X | X | | | | | | |
| | **182.76** | 9.6 | 9000 | 1.37 | 0.90 | 0.69 | 0.45 | X | X* | | | | | | |
| | **204.42** | 8.6 | 11408 | 1.56 | 1.03 | 0.78 | 0.51 | X | X | | | | | | |
| | **219.32** | 8 | 10620 | 1.35 | 0.89 | 0.67 | 0.44 | X | X* | | | | | | |
| | **231.43** | 7.6 | 9877 | 1.19 | 0.79 | 0.60 | 0.39 | X | X* | | | | | | |
| | **263.93** | 6.6 | 11213 | 1.17 | 0.77 | 0.59 | 0.39 | X | X* | | | | | | |
| | **278.51** | 6.3 | 11319 | 1.13 | 0.75 | 0.57 | 0.37 | X | X* | | | | | | |
| | **298.80** | 5.9 | 9894 | 0.93 | 0.61 | 0.46 | 0.31 | X* | X* | | | | | | |
| | **359.59** | 4.9 | 11381 | 0.88 | 0.58 | 0.44 | 0.29 | X* | X* | | | | | | |
| | **421.11** | 4.2 | 10496 | 0.70 | 0.46 | 0.35 | 0.23 | X* | X* | | | | | | |
| | **528.37** | 3.3 | 8762 | 0.46 | 0.30 | 0.23 | 0.15 | X* | X* | | | | | | |
| | **618.76** | 2.8 | 9841 | 0.44 | 0.29 | 0.22 | 0.14 | X* | X* | | | | | | |
| | **764.03** | 2.3 | 9124 | 0.33 | 0.22 | 0.17 | 0.11 | X* | X* | | | | | | |
| | **868.02** | 2 | 7611 | 0.24 | 0.16 | 0.12 | 0.08 | X* | X* | | | | | | |
| | **1071.82** | 1.6 | 8496 | 0.22 | 0.14 | 0.11 | 0.07 | X* | X* | | | | | | |
| **SK 42/12** | 87.73 | 20 | 10620 | 3.00 | 1.98 | 1.50 | 0.99 | X | X | X* | | | | | |
| | 116.20 | 15 | 10620 | 2.53 | 1.67 | 1.26 | 0.83 | X | X | X* | | | | | |
| | 140.40 | 12 | 10620 | 2.02 | 1.33 | 1.01 | 0.67 | X | X | X* | | | | | |
| | 169.00 | 10 | 10620 | 1.69 | 1.11 | 0.84 | 0.56 | X | X* | X* | | | | | |
| | 230.05 | 7.6 | 10620 | 1.28 | 0.85 | 0.64 | 0.42 | X | X* | X* | | | | | |
| | 276.92 | 6.3 | 10620 | 1.06 | 0.70 | 0.53 | 0.35 | X | X* | X* | | | | | |
| | 346.53 | 5.1 | 10620 | 0.91 | 0.60 | 0.46 | 0.30 | X* | X* | X* | | | | | |
| | 433.49 | 4 | 10620 | 0.73 | 0.48 | 0.36 | 0.24 | X* | X* | X* | | | | | |
| | 550.73 | 3.2 | 10620 | 0.59 | 0.39 | 0.30 | 0.20 | X* | X* | | | | | | |
| | **670.81** | 2.6 | 10620 | 0.49 | 0.32 | 0.25 | 0.16 | X* | X* | | | | | | |
| | 750.33 | 2.3 | 10620 | 0.44 | 0.29 | 0.22 | 0.15 | X* | X* | | | | | | |
| | **1114.65** | 1.6 | 10620 | 0.32 | 0.21 | 0.16 | 0.11 | X* | | | | | | | |
| | **1393.38** | 1.3 | 10620 | 0.27 | 0.18 | 0.14 | 0.09 | X* | | | | | | | |
| | **1561.55** | 1.1 | 10620 | 0.24 | 0.16 | 0.12 | 0.08 | X* | | | | | | | |
| | **2163.20** | 0.81 | 10620 | 0.19 | 0.13 | 0.10 | 0.06 | X* | | | | | | | |
| | **2560.21** | 0.68 | 10620 | 0.17 | 0.11 | 0.08 | 0.06 | X* | | | | | | | |

* Caution - The motor power may exceed the gear unit's mechanical torque capacity
◈ The mechanical power limit of the solid input shaft type "W" may limit the reducer rating.
All ratings are mechanical. See page 14 for thermal considerations.

| lb | W | 56C | 140TC | 180TC |
|---|---|---|---|---|
| **SK 43** | 154 | 150 | 159 | 168 |
| **SK 42/12** | 143 | 148 | 154 | 170 |


Send Quote Requests to info@automatedpt.com
Call +1(800)985-6929 To Order or Order Online At Nordgearmotors.com

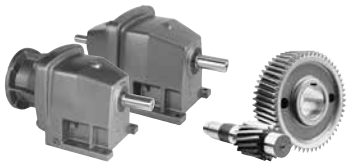

# SK 51E , SK 52
# NEMA-C + W
# Ratings & Combinations



| Model Type | Gear Ratio | Output Speed | Output Torque* | Maximum input power◈ Solid input shafts type "W" | | | | NEMA C-Face* Available Combinations | | | | | | | |
|---|---|---|---|---|---|---|---|---|---|---|---|---|---|---|---|
| | | | | Input Speed | | | | | | | | | | | |
| | $i_{tot}$ | $n_2$ 1750 rpm | $T_{2\,max}$ | 1750 rpm | 1150 rpm | 875 rpm | 580 rpm | | | | | | | | |
| | | [rpm] | [lb-in] | [hp] | [hp] | [hp] | [hp] | 56C | 140TC | 180TC | 210TC | 250TC | 280TC | 320TC | 360TC |
| **SK 51E** | 1.24 | 1411 | 2434 | 30.00 | 19.80 | 15.00 | 9.90 | | | | | X | X | | |
| | 1.44 | 1215 | 2699 | 30.00 | 19.80 | 15.00 | 9.90 | | | | | X | X | | |
| | 1.52 | 1151 | 2744 | 30.00 | 19.80 | 15.00 | 9.90 | | | | | X | X | | |
| | 1.64 | 1067 | 2876 | 30.00 | 19.80 | 15.00 | 9.90 | | | | | X | X | | |
| | 1.82 | 962 | 3018 | 30.00 | 19.80 | 15.00 | 9.90 | X | X | X | X | X | X | | |
| | 2.06 | 850 | 3381 | 30.00 | 19.80 | 15.00 | 9.90 | | | X | X | X | X | | |
| | 2.50 | 700 | 3770 | 30.00 | 19.80 | 15.00 | 9.90 | X | X | X | X | X | X | | |
| | 2.86 | 612 | 4036 | 30.00 | 19.80 | 15.00 | 9.90 | X | X | X | X | X | X | | |
| | 3.31 | 529 | 4354 | 30.00 | 19.80 | 15.00 | 9.90 | X | X | X | X | X | X | | |
| | 4.04 | 433 | 3629 | 24.93 | 16.45 | 12.46 | 8.23 | X | X | X | X | X | | | |
| | 5.50 | 318 | 1947 | 9.82 | 6.48 | 4.91 | 3.24 | X | X | X | X* | | | | |
| | **6.82** | 257 | 3540 | 14.44 | 9.53 | 7.22 | 4.76 | | | X | X | | | | |
| | **9.09** | 193 | 2832 | 8.67 | 5.72 | 4.34 | 2.86 | | | X | X* | | | | |
| | **13.27** | 132 | 2567 | 5.38 | 3.55 | 2.69 | 1.77 | X | X | X | | | | | |
| **SK 52** | 2.78 | 629 | 7859 | 30.00 | 19.80 | 15.00 | 9.90 | | | | | X | X | | |
| | 3.23 | 542 | 8487 | 30.00 | 19.80 | 15.00 | 9.90 | | | | | X | X | | |
| | 3.40 | 515 | 8930 | 30.00 | 19.80 | 15.00 | 9.90 | | | | | X | X | | |
| | 3.67 | 477 | 9354 | 30.00 | 19.80 | 15.00 | 9.90 | | | | | X | X | | |
| | 4.08 | 429 | 9974 | 30.00 | 19.80 | 15.00 | 9.90 | | | X | X | X | X | | |
| | 4.38 | 400 | 11248 | 30.00 | 19.80 | 15.00 | 9.90 | | | | | X | X | | |
| | 4.61 | 380 | 10576 | 30.00 | 19.80 | 15.00 | 9.90 | | | X | X | X | X | | |
| | 5.08 | 344 | 12080 | 30.00 | 19.80 | 15.00 | 9.90 | | | | | X | X | | |
| | 5.60 | 312 | 10355 | 30.00 | 19.80 | 15.00 | 9.90 | X | X | X | X | X | X | | |
| | 5.79 | 302 | 12709 | 30.00 | 19.80 | 15.00 | 9.90 | | | | | X | X | | |
| | 6.09 | 287 | 13027 | 30.00 | 19.80 | 15.00 | 9.90 | | | | | X | X | | |
| | 6.42 | 273 | 13257 | 30.00 | 19.80 | 15.00 | 9.90 | | | X | X | X | X | | |
| | 7.27 | 241 | 13850 | 30.00 | 19.80 | 15.00 | 9.90 | | | X | X | X | X | | |
| | 7.70 | 227 | 14089 | 30.00 | 19.80 | 15.00 | 9.90 | | | X | X | X | X | | |
| | 8.83 | 198 | 14833 | 30.00 | 19.80 | 15.00 | 9.90 | X | X | X | X | X | X | | |
| | 10.58 | 165 | 15585 | 30.00 | 19.80 | 15.00 | 9.90 | X | X | X | X | X | X | | |
| | 13.45 | 130 | 16381 | 30.00 | 19.80 | 15.00 | 9.90 | X | X | X | X | X | X | | |
| | 14.00 | 125 | 16992 | 30.00 | 19.80 | 15.00 | 9.90 | X | X | X | X | X | X | | |
| | 17.81 | 98 | 16992 | 26.42 | 17.44 | 13.21 | 8.72 | X | X | X | X | X | X* | | |
| | 19.60 | 89 | 16912 | 23.88 | 15.76 | 11.94 | 7.88 | X | X | X | X | X | X* | | |
| | 21.68 | 81 | 16753 | 21.53 | 14.21 | 10.77 | 7.11 | X | X | X | X | X | X* | | |
| | 23.92 | 73 | 16912 | 19.59 | 12.93 | 9.79 | 6.46 | X | X | X | X | X* | | | |
| | **24.07** | 73 | 14948 | 17.31 | 11.43 | 8.66 | 5.71 | | | X | X | | | | |
| | 26.46 | 66 | 16753 | 17.54 | 11.58 | 8.77 | 5.79 | X | X | X | X | X* | | | |
| | **28.85** | 61 | 17912 | 17.34 | 11.44 | 8.67 | 5.72 | | | X | X | | | | |
| | **32.09** | 55 | 12328 | 10.76 | 7.10 | 5.38 | 3.55 | | | X | X | | | | |
| | 32.56 | 54 | 11151 | 9.55 | 6.31 | 4.78 | 3.15 | X | X | X | X* | | | | |
| | 36.03 | 49 | 12337 | 9.59 | 6.33 | 4.80 | 3.17 | X | X | X | X* | | | | |
| | **36.69** | 48 | 16992 | 12.94 | 8.54 | 6.47 | 4.27 | | | X | X | | | | |
| | **38.45** | 46 | 14762 | 10.77 | 7.11 | 5.39 | 3.56 | | | X | X | | | | |
| | **40.37** | 43 | 16912 | 11.54 | 7.62 | 5.77 | 3.81 | | | X | X | | | | |
| | **48.90** | 36 | 16992 | 9.71 | 6.41 | 4.85 | 3.20 | | | X | X* | | | | |
| | **53.81** | 33 | 16912 | 8.86 | 5.84 | 4.43 | 2.92 | | | X | X* | | | | |
| | **59.54** | 29 | 16753 | 7.71 | 5.09 | 3.85 | 2.54 | | | X | X* | | | | |
| | **71.39** | 25 | 14054 | 5.57 | 3.68 | 2.79 | 1.84 | X | X | X | | | | | |
| | **78.56** | 22 | 14125 | 4.93 | 3.25 | 2.47 | 1.63 | X | X | X* | | | | | |
| | **86.92** | 20 | 15231 | 4.83 | 3.19 | 2.42 | 1.59 | X | X | X* | | | | | |

* Caution - The motor power may exceed the gear unit's mechanical torque capacity
◈ The mechanical power limit of the solid input shaft type "W" may limit the reducer rating.
All ratings are mechanical. See page 14 for thermal considerations.

| lb | W | 56C | 140TC | 180TC | 210TC | 250TC | 280TC |
|---|---|---|---|---|---|---|---|
| **SK 51E** | 121 | 110 | 110 | 126 | 126 | 179 | 199 |
| **SK 52** | 207 | 196 | 196 | 212 | 212 | 265 | 285 |


Send Quote Requests to info@automatedpt.com
Call +1(800)985-6929 To Order or Order Online At Nordgearmotors.com

# SK 53, SK 52/12
# NEMA-C + W
# Ratings & Combinations

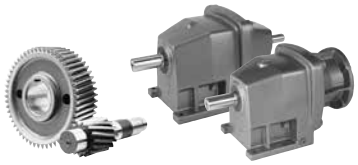

DRIVESYSTEMS

W + NEMA

| Model Type | Gear Ratio | Output Speed | Output Torque* | Maximum input power◈ Solid input shafts type "W" | | | | NEMA C-Face* Available Combinations | | | | | | | |
|---|---|---|---|---|---|---|---|---|---|---|---|---|---|---|---|
| | | | | Input Speed | | | | | | | | | | | |
| | $i_{tot}$ | $n_2$ 1750 rpm | $T_{2\ max}$ | 1750 rpm | 1150 rpm | 875 rpm | 580 rpm | | | | | | | | |
| | | [rpm] | [lb-in] | [hp] | [hp] | [hp] | [hp] | 56C | 140TC | 180TC | 210TC | 250TC | 280TC | 320TC | 360TC |
| **SK 53** | 58.94 | 30 | 14470 | 5.00 | 3.30 | 2.50 | 1.65 | X | X | X | | | | | |
| | 65.35 | 27 | 16992 | 5.00 | 3.30 | 2.50 | 1.65 | X | X | X | | | | | |
| | 79.69 | 22 | 16479 | 5.00 | 3.30 | 2.50 | 1.65 | X | X | X | | | | | |
| | 95.49 | 18 | 19744 | 5.00 | 3.30 | 2.50 | 1.65 | X | X | X | | | | | |
| | 105.87 | 17 | 19682 | 5.00 | 3.30 | 2.50 | 1.65 | X | X | X | | | | | |
| | 139.34 | 13 | 19753 | 4.07 | 2.69 | 2.04 | 1.34 | X | X | X* | | | | | |
| | 177.22 | 9.9 | 16992 | 2.67 | 1.76 | 1.33 | 0.88 | X | X | X* | | | | | |
| | 185.72 | 9.4 | 16107 | 2.40 | 1.59 | 1.20 | 0.79 | X | X | X* | | | | | |
| | 236.21 | 7.4 | 16992 | 2.00 | 1.32 | 1.00 | 0.66 | X | X* | X* | | | | | |
| | **245.56** | 7.1 | 16452 | 1.85 | 1.22 | 0.93 | 0.61 | X | X* | | | | | | |
| | **294.26** | 5.9 | 19709 | 1.85 | 1.22 | 0.92 | 0.61 | X | X* | | | | | | |
| | **374.25** | 4.7 | 16992 | 1.27 | 0.84 | 0.63 | 0.42 | X | X* | | | | | | |
| | **392.20** | 4.5 | 16134 | 1.15 | 0.76 | 0.58 | 0.38 | X | X* | | | | | | |
| | **498.82** | 3.5 | 16992 | 0.94 | 0.62 | 0.47 | 0.31 | X* | X* | | | | | | |
| | **548.89** | 3.2 | 16912 | 0.86 | 0.57 | 0.43 | 0.28 | X* | X* | | | | | | |
| | **607.30** | 2.9 | 16656 | 0.77 | 0.51 | 0.38 | 0.25 | X* | X* | | | | | | |
| | **728.20** | 2.4 | 14116 | 0.54 | 0.35 | 0.27 | 0.18 | X* | X* | | | | | | |
| **SK 52/12** | 97.80 | 18 | 16196 | 4.63 | 3.05 | 2.31 | 1.53 | X | X | X* | | | | | |
| | 124.38 | 14 | 16196 | 3.60 | 2.37 | 1.80 | 1.19 | X | X | X* | | | | | |
| | 146.03 | 12 | 16196 | 3.08 | 2.04 | 1.54 | 1.02 | X | X | X* | | | | | |
| | 194.62 | 9 | 16196 | 2.31 | 1.53 | 1.16 | 0.76 | X | X | X* | | | | | |
| | 219.56 | 8 | 16196 | 2.06 | 1.36 | 1.03 | 0.68 | X | X | X* | | | | | |
| | 283.13 | 6.2 | 16196 | 1.59 | 1.05 | 0.80 | 0.53 | X | X* | X* | | | | | |
| | 354.06 | 4.9 | 16196 | 1.26 | 0.83 | 0.63 | 0.42 | X | X* | X* | | | | | |
| | 491.28 | 3.6 | 16196 | 0.98 | 0.65 | 0.49 | 0.32 | X* | X* | X* | | | | | |
| | 542.09 | 3.2 | 16196 | 0.88 | 0.58 | 0.44 | 0.29 | X* | X* | | | | | | |
| | 689.41 | 2.5 | 16196 | 0.70 | 0.46 | 0.35 | 0.23 | X* | X* | | | | | | |
| | 918.83 | 1.9 | 16196 | 0.54 | 0.36 | 0.27 | 0.18 | X* | X* | | | | | | |
| | **1144.36** | 1.5 | 16196 | 0.44 | 0.29 | 0.22 | 0.14 | X* | X* | | | | | | |
| | **1425.44** | 1.2 | 16196 | 0.36 | 0.24 | 0.18 | 0.12 | X* | | | | | | | |
| | **1714.92** | 1 | 16196 | 0.31 | 0.21 | 0.16 | 0.10 | X* | | | | | | | |
| | **2107.10** | 0.83 | 16196 | 0.27 | 0.18 | 0.13 | 0.09 | X* | | | | | | | |
| | **2632.78** | 0.66 | 16196 | 0.22 | 0.15 | 0.11 | 0.07 | X* | | | | | | | |

* Caution - The motor power may exceed the gear unit's mechanical torque capacity
◈ The mechanical power limit of the solid input shaft type "W" may limit the reducer rating.
All ratings are mechanical. See page 14 for thermal considerations.

| lb | W | 56C | 140TC | 180TC |
|---|---|---|---|---|
| **SK 53** | 227 | 223 | 231 | 240 |
| **SK 52/12** | 207 | 212 | 218 | 234 |


Send Quote Requests to info@automatedpt.com
Call +1(800)985-6929 To Order or Order Online At Nordgearmotors.com

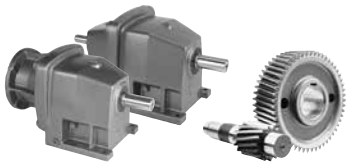

# SK 62 , SK 63
# NEMA-C + W
# Ratings & Combinations



| Model Type | Gear Ratio $i_{tot}$ | Output Speed $n_2$ 1750 rpm [rpm] | Output Torque* $T_{2\,max}$ [lb-in] | Maximum input power◈ Solid input shafts type "W" Input Speed 1750 rpm [hp] | 1150 rpm [hp] | 875 rpm [hp] | 580 rpm [hp] | NEMA C-Face* Available Combinations 56C | 140TC | 180TC | 210TC | 250TC | 280TC | 320TC | 360TC |
|---|---|---|---|---|---|---|---|---|---|---|---|---|---|---|---|
| **SK 62** | 2.97 | 589 | 17346 | 60.00 | 39.60 | 30.00 | 19.80 | | | | | | X | X | X* |
| | 3.30 | 530 | 17523 | 60.00 | 39.60 | 30.00 | 19.80 | | | X | X | X | X | X | X* |
| | 3.72 | 470 | 17966 | 60.00 | 39.60 | 30.00 | 19.80 | | | X | X | X | X | X | X* |
| | 3.91 | 448 | 17780 | 60.00 | 39.60 | 30.00 | 19.80 | | | X | X | X | X | X | X* |
| | 4.05 | 432 | 16682 | 60.00 | 39.60 | 30.00 | 19.80 | | | | | | X | X | X* |
| | 4.56 | 384 | 18417 | 60.00 | 39.60 | 30.00 | 19.80 | | | X | X | X | X | X | X* |
| | 5.29 | 331 | 16656 | 60.00 | 39.60 | 30.00 | 19.80 | | | X | X | X | X | X | X* |
| | 6.35 | 276 | 17081 | 60.00 | 39.60 | 30.00 | 19.80 | | | X | X | X | X | X | X* |
| | 7.56 | 231 | 27612 | 60.00 | 39.60 | 30.00 | 19.80 | | | X | X | X | X | X | X* |
| | 8.78 | 199 | 26656 | 60.00 | 39.60 | 30.00 | 19.80 | | | X | X | X | X | X | X* |
| | 10.55 | 166 | 27373 | 60.00 | 39.60 | 30.00 | 19.80 | | | X | X | X | X | X | X* |
| | 11.59 | 151 | 27231 | 60.00 | 39.60 | 30.00 | 19.80 | | | X | X | X | X | X | X* |
| | 13.92 | 126 | 27258 | 54.49 | 35.97 | 27.25 | 17.98 | | | X | X | X | X | X | X* |
| | 15.80 | 111 | 26585 | 46.82 | 30.90 | 23.41 | 15.45 | | | X | X | X | X | | |
| | 18.14 | 96 | 27231 | 41.48 | 27.38 | 20.74 | 13.69 | | | X | X | X | X | | |
| | **37.05** | 47 | 26639 | 19.87 | 13.11 | 9.93 | 6.56 | | | X | X | X* | X* | | |
| | **48.73** | 36 | 22214 | 12.69 | 8.37 | 6.34 | 4.19 | | | X | X | | | | |
| **SK 63** | 17.37 | 101 | 28320 | 30.00 | 19.80 | 15.00 | 9.90 | X | X | X | X | X | X | | |
| | 20.77 | 84 | 28320 | 30.00 | 19.80 | 15.00 | 9.90 | X | X | X | X | X | X | | |
| | 21.98 | 80 | 28320 | 30.00 | 19.80 | 15.00 | 9.90 | X | X | X | X | X | X | | |
| | 26.28 | 67 | 28320 | 30.00 | 19.80 | 15.00 | 9.90 | X | X | X | X | X | X | | |
| | 30.91 | 57 | 31772 | 28.73 | 18.96 | 14.37 | 9.48 | X | X | X | X | X | X* | | |
| | 36.11 | 48 | 32657 | 24.87 | 16.42 | 12.44 | 8.21 | X | X | X | X | X | X* | | |
| | 43.43 | 40 | 32568 | 20.67 | 13.64 | 10.33 | 6.82 | X | X | X | X | X | X* | | |
| | 50.73 | 34 | 32745 | 17.66 | 11.66 | 8.83 | 5.83 | X | X | X | X | X* | X* | | |
| | 53.82 | 33 | 32745 | 17.15 | 11.32 | 8.57 | 5.66 | X | X | X | X | X* | X* | | |
| | 62.87 | 28 | 32480 | 14.43 | 9.52 | 7.21 | 4.76 | X | X | X | X | X* | X* | | |
| | 77.46 | 23 | 32745 | 11.95 | 7.89 | 5.97 | 3.94 | X | X | X | X | X* | | | |
| | 87.06 | 20 | 28320 | 8.99 | 5.93 | 4.49 | 2.97 | X | X | X | X* | | | | |
| | **106.95** | 16 | 32745 | 8.31 | 5.49 | 4.16 | 2.74 | | | X | X* | | | | |
| | 107.89 | 16 | 32303 | 8.20 | 5.41 | 4.10 | 2.71 | X | X | X | X* | | | | |
| | **132.54** | 13 | 32745 | 6.75 | 4.46 | 3.38 | 2.23 | | | X | X* | | | | |
| | **145.71** | 12 | 32745 | 6.23 | 4.11 | 3.12 | 2.06 | | | X | X* | | | | |
| | **180.57** | 9.7 | 32391 | 4.99 | 3.29 | 2.49 | 1.65 | | | X* | X* | | | | |
| | **214.10** | 8.2 | 32214 | 4.19 | 2.77 | 2.10 | 1.38 | X | X | X* | | | | | |
| | **265.32** | 6.6 | 32214 | 3.37 | 2.23 | 1.69 | 1.11 | X | X | X* | | | | | |
| | **300.34** | 5.8 | 28320 | 2.61 | 1.72 | 1.30 | 0.86 | X | X | | | | | | |
| | **372.21** | 4.7 | 28320 | 2.11 | 1.39 | 1.06 | 0.70 | X | X | | | | | | |

* Caution - The motor power may exceed the gear unit's mechanical torque capacity
◈ The mechanical power limit of the solid input shaft type "W" may limit the reducer rating.
All ratings are mechanical. See page 14 for thermal considerations.

| lb | W | 56C | 140TC | 180TC | 210TC | 250TC | 280TC | 320TC | 360TC |
|---|---|---|---|---|---|---|---|---|---|
| **SK 62** | 377 | – | – | 351 | 379 | 434 | 434 | 465 | 498 |
| **SK 63** | 328 | 317 | 317 | 333 | 364 | 386 | 386 | – | – |


Send Quote Requests to info@automatedpt.com
Call +1(800)985-6929 To Order or Order Online At Nordgearmotors.com

# SK 63/22, SK 63/23
# NEMA-C + W
# Ratings & Combinations

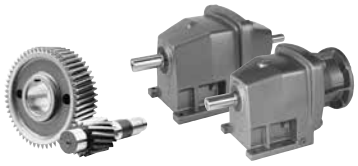

DRIVESYSTEMS

W + NEMA

| Model Type | Gear Ratio | Output Speed | Output Torque* | Maximum input power◈ Solid input shafts type "W" | | | | NEMA C-Face* Available Combinations | | | | | | | |
|---|---|---|---|---|---|---|---|---|---|---|---|---|---|---|---|
| | | | | Input Speed | | | | | | | | | | | |
| | $i_{tot}$ | $n_2$ 1750 rpm | $T_{2\ max}$ | 1750 rpm | 1150 rpm | 875 rpm | 580 rpm | | | | | | | | |
| | | [rpm] | [lb-in] | [hp] | [hp] | [hp] | [hp] | 56C | 140TC | 180TC | 210TC | 250TC | 280TC | 320TC | 360TC |
| **SK 63/22** | 153.31 | 11 | 28320 | 4.94 | 3.26 | 2.47 | 1.63 | X | X | X* | | | | | |
| | 172.85 | 10 | 28320 | 4.49 | 2.97 | 2.25 | 1.48 | X | X | X* | | | | | |
| | 224.97 | 7.8 | 28320 | 3.50 | 2.31 | 1.75 | 1.16 | X | X | X* | | | | | |
| | 282.73 | 6.2 | 28320 | 2.79 | 1.84 | 1.39 | 0.92 | X | X | X* | | | | | |
| | 368.29 | 4.8 | 28320 | 2.16 | 1.42 | 1.08 | 0.71 | X | X | X* | | | | | |
| | 430.19 | 4.1 | 28320 | 1.84 | 1.22 | 0.92 | 0.61 | X | X* | X* | | | | | |
| | 552.45 | 3.2 | 28320 | 1.44 | 0.95 | 0.72 | 0.47 | X | X* | X* | | | | | |
| | 727.45 | 2.4 | 28320 | 1.08 | 0.71 | 0.54 | 0.36 | X | X* | X* | | | | | |
| | 849.73 | 2.1 | 28320 | 1.00 | 0.66 | 0.50 | 0.33 | X | X* | X* | | | | | |
| **SK 63/23** | 1064.04 | 1.6 | 28320 | 0.75 | 0.50 | 0.38 | 0.25 | X* | X* | | | | | | |
| | 1408.77 | 1.2 | 28320 | 0.59 | 0.39 | 0.30 | 0.20 | X* | X* | | | | | | |
| | 1676.63 | 1 | 28320 | 0.50 | 0.33 | 0.25 | 0.17 | X* | X* | | | | | | |
| | 2161.10 | 0.81 | 28320 | 0.42 | 0.28 | 0.21 | 0.14 | X* | X* | | | | | | |
| | 2814.26 | 0.62 | 28320 | 0.33 | 0.22 | 0.17 | 0.11 | X* | X* | | | | | | |
| | 3389.71 | 0.52 | 28320 | 0.29 | 0.19 | 0.14 | 0.09 | X* | X* | | | | | | |
| | 4369.06 | 0.4 | 28320 | 0.23 | 0.15 | 0.12 | 0.08 | X* | X* | | | | | | |
| | 5393.14 | 0.32 | 28320 | 0.20 | 0.13 | 0.10 | 0.07 | X* | X* | | | | | | |
| | 6683.37 | 0.26 | 28320 | 0.17 | 0.11 | 0.09 | 0.06 | X* | X* | | | | | | |
| | **8150.78** | 0.21 | 28320 | 0.15 | 0.10 | 0.07 | 0.05 | X* | | | | | | | |
| | **11045.44** | 0.16 | 28320 | 0.13 | 0.08 | 0.06 | 0.04 | X* | | | | | | | |
| | **13304.45** | 0.13 | 28320 | 0.11 | 0.07 | 0.06 | 0.04 | X* | | | | | | | |

* Caution - The motor power may exceed the gear unit's mechanical torque capacity
◈ The mechanical power limit of the solid input shaft type "W" may limit the reducer rating.
All ratings are mechanical. See page 14 for thermal considerations.

| lb | W | 56C | 140TC | 180TC |
|---|---|---|---|---|
| **SK 63/22** | 348 | 344 | 353 | 361 |
| **SK 63/23** | 353 | 357 | 364 | – |


Send Quote Requests to info@automatedpt.com
Call +1(800)985-6929 To Order or Order Online At Nordgearmotors.com

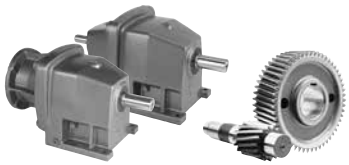

# SK 72 , SK 73
# NEMA-C + W
# Ratings & Combinations



| Model Type | Gear Ratio $i_{tot}$ | Output Speed $n_2$ 1750 rpm [rpm] | Output Torque* $T_{2\,max}$ [lb-in] | Maximum input power◈ Solid input shafts type "W" Input Speed 1750 rpm [hp] | 1150 rpm [hp] | 875 rpm [hp] | 580 rpm [hp] | NEMA C-Face* Available Combinations 56C | 140TC | 180TC | 210TC | 250TC | 280TC | 320TC | 360TC |
|---|---|---|---|---|---|---|---|---|---|---|---|---|---|---|---|
| **SK 72** | 2.76 | 634 | 18895 | 75.00 | 49.50 | 37.50 | 24.75 | | | X | X | X | X | X | X |
| | 3.26 | 537 | 20647 | 75.00 | 49.50 | 37.50 | 24.75 | | | | | | | X | X |
| | 3.43 | 510 | 21444 | 75.00 | 49.50 | 37.50 | 24.75 | | | X | X | X | X | X | X |
| | 3.86 | 453 | 22913 | 75.00 | 49.50 | 37.50 | 24.75 | | | | | | | X | X |
| | 4.12 | 425 | 23656 | 75.00 | 49.50 | 37.50 | 24.75 | | | X | X | X | X | X | X |
| | 4.85 | 361 | 25754 | 75.00 | 49.50 | 37.50 | 24.75 | | | X | X | X | X | X | X |
| | 5.60 | 312 | 25054 | 75.00 | 49.50 | 37.50 | 24.75 | | | X | X | X | X | X | X |
| | 6.42 | 273 | 24515 | 75.00 | 49.50 | 37.50 | 24.75 | | | X | X | X | X | X | X |
| | 6.95 | 252 | 37984 | 75.00 | 49.50 | 37.50 | 24.75 | | | X | X | X | X | X | X |
| | 8.19 | 214 | 41214 | 75.00 | 49.50 | 37.50 | 24.75 | | | X | X | X | X | X | X |
| | 9.46 | 185 | 41666 | 75.00 | 49.50 | 37.50 | 24.75 | | | X | X | X | X | X | X |
| | 10.84 | 161 | 41391 | 75.00 | 49.50 | 37.50 | 24.75 | | | X | X | X | X | X | X |
| | 12.52 | 140 | 35869 | 75.00 | 49.50 | 37.50 | 24.75 | | | X | X | X | X | X | X |
| | 14.33 | 122 | 35869 | 69.43 | 45.83 | 34.72 | 22.91 | | | X | X | X | X | X | X* |
| | 16.86 | 104 | 35869 | 59.19 | 39.06 | 29.59 | 19.53 | | | X | X | X | X | X | X* |
| | **21.64** | 81 | 39754 | 51.09 | 33.72 | 25.55 | 16.86 | | | | | X | X | | |
| | 21.72 | 81 | 35869 | 46.10 | 30.43 | 23.05 | 15.21 | | | X | X | X | X | | |
| | **28.63** | 61 | 35869 | 34.72 | 22.91 | 17.36 | 11.46 | | | | | X | X | | |
| | **33.04** | 53 | 28470 | 23.94 | 15.80 | 11.97 | 7.90 | | | X | X | X | X* | | |
| | **43.71** | 40 | 35843 | 22.75 | 15.01 | 11.37 | 7.51 | | | X | X | X | X* | | |
| **SK 73** | 18.00 | 97 | 44250 | 60.00 | 39.60 | 30.00 | 19.80 | | | X | X | X | X | X | X* |
| | 20.62 | 85 | 44250 | 59.68 | 39.39 | 29.84 | 19.69 | | | X | X | X | X | X | X* |
| | 23.34 | 75 | 44250 | 52.66 | 34.75 | 26.33 | 17.38 | | | X | X | X | X | X | X* |
| | 28.32 | 62 | 44250 | 43.53 | 28.73 | 21.77 | 14.37 | | | X | X | X | X | X* | X* |
| | 33.24 | 53 | 44250 | 37.21 | 24.56 | 18.61 | 12.28 | | | X | X | X | X | X* | X* |
| | 37.63 | 47 | 44250 | 33.00 | 21.78 | 16.50 | 10.89 | | | X | X | X | X | X* | X* |
| | 45.66 | 38 | 47525 | 28.65 | 18.91 | 14.33 | 9.46 | | | X | X | X | X* | X* | X* |
| | 52.24 | 33 | 49206 | 25.76 | 17.00 | 12.88 | 8.50 | | | X | X | X | X* | | |
| | 60.46 | 29 | 50003 | 23.01 | 15.19 | 11.50 | 7.59 | | | X | X | X | X* | | |
| | 74.87 | 23 | 47171 | 17.21 | 11.36 | 8.61 | 5.68 | | | X | X | X* | X* | | |
| | 91.38 | 19 | 47171 | 14.22 | 9.39 | 7.11 | 4.69 | | | X | X | X* | | | |
| | 100.46 | 17 | 35400 | 9.55 | 6.30 | 4.77 | 3.15 | | | X | X* | | | | |
| | 124.41 | 14 | 44250 | 9.83 | 6.49 | 4.91 | 3.24 | | | X | X* | | | | |
| | **124.57** | 14 | 49737 | 11.05 | 7.29 | 5.52 | 3.65 | | | X | X | X* | X* | | |
| | **166.03** | 11 | 49826 | 8.70 | 5.74 | 4.35 | 2.87 | | | X | X* | | | | |
| | **205.61** | 8.5 | 47171 | 6.36 | 4.20 | 3.18 | 2.10 | | | X | X* | | | | |

* Caution - The motor power may exceed the gear unit's mechanical torque capacity
◈ The mechanical power limit of the solid input shaft type "W" may limit the reducer rating.
All ratings are mechanical. See page 14 for thermal considerations.

| lb | W | 180TC | 210TC | 250TC | 280TC | 320TC | 360TC |
|---|---|---|---|---|---|---|---|
| **SK 72** | 529 | 503 | 503 | 531 | 583 | 617 | 650 |
| **SK 73** | 551 | 525 | 525 | 553 | 608 | 639 | 672 |


Send Quote Requests to info@automatedpt.com
Call +1(800)985-6929 To Order or Order Online At Nordgearmotors.com

# SK 73/22, SK 73/23, SK 73/32 NEMA-C + W Ratings & Combinations

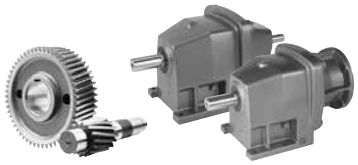

DRIVESYSTEMS



| Model Type | Gear Ratio | Output Speed | Output Torque* | Maximum input power◈ Solid input shafts type "W" | | | | NEMA C-Face* Available Combinations | | | | | | | |
|---|---|---|---|---|---|---|---|---|---|---|---|---|---|---|---|
| | | | | Input Speed | | | | | | | | | | | |
| | $i_{tot}$ | $n_2$ 1750 rpm | $T_{2\ max}$ | 1750 rpm | 1150 rpm | 875 rpm | 580 rpm | | | | | | | | |
| | | [rpm] | [lb-in] | [hp] | [hp] | [hp] | [hp] | 56C | 140TC | 180TC | 210TC | 250TC | 280TC | 320TC | 360TC |
| **SK 73/22** | 279.33 | 6.3 | 44250 | 4.42 | 2.92 | 2.21 | 1.46 | X | X | X* | | | | | |
| | 345.90 | 5.1 | 44250 | 3.58 | 2.36 | 1.79 | 1.18 | X | X | X* | | | | | |
| | 457.68 | 3.8 | 44250 | 2.67 | 1.76 | 1.33 | 0.88 | X | X | X* | | | | | |
| | 566.77 | 3.1 | 44250 | 2.18 | 1.44 | 1.09 | 0.72 | X | X | X* | | | | | |
| | 737.61 | 2.4 | 44250 | 1.69 | 1.11 | 0.84 | 0.56 | X | X* | X* | | | | | |
| | 888.16 | 2 | 44250 | 1.40 | 0.93 | 0.70 | 0.46 | X | X* | X* | | | | | |
| | 1099.84 | 1.6 | 44250 | 1.12 | 0.74 | 0.56 | 0.37 | X | X* | X* | | | | | |
| | 1254.07 | 1.4 | 44250 | 1.04 | 0.68 | 0.52 | 0.34 | X | X* | X* | | | | | |
| | **1772.08** | 0.99 | 44250 | 0.75 | 0.49 | 0.37 | 0.25 | X* | X* | | | | | | |
| | **2194.44** | 0.8 | 44250 | 0.62 | 0.41 | 0.31 | 0.20 | X* | X* | | | | | | |
| | **2775.11** | 0.63 | 44250 | 0.50 | 0.33 | 0.25 | 0.16 | X* | X* | | | | | | |
| | **3436.53** | 0.51 | 44250 | 0.41 | 0.27 | 0.21 | 0.14 | X* | X* | | | | | | |
| **SK 73/23** | 4440.18 | 0.39 | 44250 | 0.33 | 0.22 | 0.16 | 0.11 | X* | X* | | | | | | |
| | 5498.45 | 0.32 | 44250 | 0.28 | 0.18 | 0.14 | 0.09 | X* | X* | | | | | | |
| | 6623.00 | 0.26 | 44250 | 0.24 | 0.16 | 0.12 | 0.08 | X* | X* | | | | | | |
| | 8186.29 | 0.21 | 44250 | 0.20 | 0.13 | 0.10 | 0.07 | X* | X* | | | | | | |
| | 11337.56 | 0.15 | 44250 | 0.16 | 0.10 | 0.08 | 0.05 | X* | | | | | | | |
| | 13436.92 | 0.13 | 44250 | 0.14 | 0.10 | 0.07 | 0.05 | X* | | | | | | | |
| **SK 73/32** | 124.65 | 14 | 44250 | 9.83 | 6.49 | 4.91 | 3.24 | X | X | X | X* | | | | |
| | 141.11 | 12 | 44250 | 8.43 | 5.56 | 4.21 | 2.78 | X | X | X | X* | | | | |
| | 171.23 | 10 | 44250 | 7.02 | 4.63 | 3.51 | 2.32 | X | X | X | X* | | | | |
| | 226.73 | 7.7 | 44250 | 5.41 | 3.57 | 2.70 | 1.78 | X | X | X | X* | | | | |

* Caution - The motor power may exceed the gear unit's mechanical torque capacity
◈ The mechanical power limit of the solid input shaft type "W" may limit the reducer rating.
All ratings are mechanical. See page 14 for thermal considerations.

| lb | W | 56C | 140TC | 180TC | 210TC |
|---|---|---|---|---|---|
| **SK 73/22** | 527 | 522 | 531 | 540 | – |
| **SK 73/23** | 531 | 536 | 542 | – | – |
| **SK 73/32** | 551 | 556 | 556 | 564 | 584 |


Send Quote Requests to info@automatedpt.com
Call +1(800)985-6929 To Order or Order Online At Nordgearmotors.com

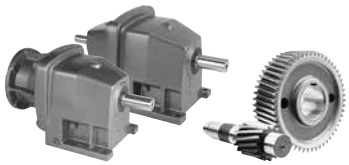

# SK 82 , SK 83
# NEMA-C + W
# Ratings & Combinations



| Model Type | Gear Ratio $i_{tot}$ | Output Speed $n_2$ 1750 rpm [rpm] | Output Torque* $T_{2\,max}$ [lb-in] | Maximum input power◈ Solid input shafts type "W" Input Speed 1750 rpm [hp] | 1150 rpm [hp] | 875 rpm [hp] | 580 rpm [hp] | NEMA C-Face* Available Combinations 56C | 140TC | 180TC | 210TC | 250TC | 280TC | 320TC | 360TC |
|---|---|---|---|---|---|---|---|---|---|---|---|---|---|---|---|
| **SK 82** | 2.89 | 606 | 27674 | 100.00 | 66.00 | 50.00 | 33.00 | | | X | X | X | X | X | X |
| | 3.62 | 483 | 34958 | 100.00 | 66.00 | 50.00 | 33.00 | | | X | X | X | X | X | X |
| | 4.43 | 395 | 38444 | 100.00 | 66.00 | 50.00 | 33.00 | | | X | X | X | X | X | X |
| | 5.29 | 331 | 42338 | 100.00 | 66.00 | 50.00 | 33.00 | | | X | X | X | X | X | X |
| | 6.19 | 283 | 38090 | 100.00 | 66.00 | 50.00 | 33.00 | | | X | X | X | X | X | X |
| | 7.39 | 237 | 55366 | 100.00 | 66.00 | 50.00 | 33.00 | | | X | X | X | X | X | X |
| | 8.82 | 198 | 58136 | 100.00 | 66.00 | 50.00 | 33.00 | | | X | X | X | X | X | X |
| | 10.33 | 169 | 60764 | 100.00 | 66.00 | 50.00 | 33.00 | | | X | X | X | X | X | X |
| | 11.84 | 148 | 63145 | 100.00 | 66.00 | 50.00 | 33.00 | | | X | X | X | X | X | X |
| | 14.29 | 122 | 58242 | 100.00 | 66.00 | 50.00 | 33.00 | | | X | X | X | X | X | X |
| | 16.56 | 106 | 58224 | 97.93 | 64.63 | 48.96 | 32.32 | | | X | X | X | X | X | X |
| | **21.94** | 80 | 64127 | 81.40 | 53.72 | 40.70 | 26.86 | | | | | | | X | X |
| | **26.48** | 66 | 58330 | 61.08 | 40.32 | 30.54 | 20.16 | | | | | | | X | X* |
| | **26.62** | 66 | 56259 | 58.92 | 38.88 | 29.46 | 19.44 | | | | | X | X | | |
| | **32.12** | 54 | 58330 | 49.98 | 32.99 | 24.99 | 16.49 | | | | | X | X | | |
| | **40.45** | 43 | 36674 | 25.02 | 16.51 | 12.51 | 8.26 | | | X | X | X | X* | | |
| | **48.82** | 36 | 47082 | 26.89 | 17.75 | 13.45 | 8.87 | | | X | X | X | X* | | |
| **SK 83** | 21.04 | 83 | 70800 | 60.00 | 39.60 | 30.00 | 19.80 | | | X | X | X | X | X | X* |
| | 24.42 | 72 | 70800 | 60.00 | 39.60 | 30.00 | 19.80 | | | X | X | X | X | X | X* |
| | 28.03 | 62 | 71951 | 60.00 | 39.60 | 30.00 | 19.80 | | | X | X | X | X | X | X* |
| | 32.52 | 54 | 75668 | 60.00 | 39.60 | 30.00 | 19.80 | | | X | X | X | X | X | X* |
| | 39.08 | 45 | 79650 | 56.87 | 37.53 | 28.44 | 18.77 | | | X | X | X | X | X | X* |
| | 44.38 | 39 | 78677 | 48.69 | 32.13 | 24.34 | 16.07 | | | X | X | X | X | X | X* |
| | 51.51 | 34 | 79031 | 42.63 | 28.14 | 21.32 | 14.07 | | | X | X | X | X | X* | X* |
| | 61.89 | 28 | 79650 | 35.39 | 23.35 | 17.69 | 11.68 | | | X | X | X | X | X* | X* |
| | 70.24 | 25 | 79296 | 31.45 | 20.76 | 15.73 | 10.38 | | | X | X | X | X | | |
| | 80.62 | 22 | 79473 | 27.74 | 18.31 | 13.87 | 9.15 | | | X | X | X | X* | | |
| | **104.00** | 17 | 81243 | 21.91 | 14.46 | 10.96 | 7.23 | | | X | X | X | X* | | |
| | **136.78** | 13 | 65313 | 13.47 | 8.89 | 6.74 | 4.45 | | | X | X | | | | |
| | **164.70** | 11 | 79031 | 13.79 | 9.10 | 6.90 | 4.55 | | | X | X | X* | X* | | |
| | **216.61** | 8.1 | 78677 | 10.11 | 6.67 | 5.06 | 3.34 | | | X | X | | | | |

* Caution - The motor power may exceed the gear unit's mechanical torque capacity
◈ The mechanical power limit of the solid input shaft type "W" may limit the reducer rating.
All ratings are mechanical. See page 14 for thermal considerations.

| lb | W | 180TC | 210TC | 250TC | 280TC | 320TC | 360TC |
|---|---|---|---|---|---|---|---|
| **SK 82** | 935 | 761 | 772 | 827 | 827 | 891 | 1012 |
| **SK 83** | 787 | 778 | 789 | 844 | 844 | 908 | 1049 |


Send Quote Requests to info@automatedpt.com
Call +1(800)985-6929 To Order or Order Online At Nordgearmotors.com

# SK 83/32, SK 83/33N
# SK 83/42 NEMA-C + W
# Ratings & Combinations

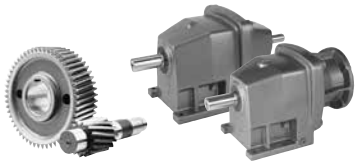

DRIVESYSTEMS

W + NEMA

| Model Type | Gear Ratio | Output Speed | Output Torque* | Maximum input power◈ Solid input shafts type "W" | | | | NEMA C-Face* Available Combinations | | | | | | | |
|---|---|---|---|---|---|---|---|---|---|---|---|---|---|---|---|
| | | | | Input Speed | | | | | | | | | | | |
| | $i_{tot}$ | $n_2$ 1750 rpm | $T_{2\ max}$ | 1750 rpm | 1150 rpm | 875 rpm | 580 rpm | | | | | | | | |
| | | [rpm] | [lb-in] | [hp] | [hp] | [hp] | [hp] | 56C | 140TC | 180TC | 210TC | 250TC | 280TC | 320TC | 360TC |
| **SK 83/32** | 724.73 | 2.4 | 70800 | 2.70 | 1.78 | 1.35 | 0.89 | X | X | X* | X* | | | | |
| | 900.50 | 1.9 | 70800 | 2.13 | 1.41 | 1.07 | 0.70 | X | X | X* | X* | | | | |
| | 1155.49 | 1.5 | 70800 | 1.69 | 1.11 | 0.84 | 0.56 | X | X* | X* | X* | | | | |
| | **1368.62** | 1.3 | 70800 | 1.46 | 0.96 | 0.73 | 0.48 | X | X* | X* | | | | | |
| | 1687.12 | 1 | 70800 | 1.12 | 0.74 | 0.56 | 0.37 | X | X* | X* | | | | | |
| | **2045.46** | 0.86 | 70800 | 1.02 | 0.67 | 0.51 | 0.34 | X | X* | | | | | | |
| | **2866.13** | 0.61 | 70800 | 0.74 | 0.49 | 0.37 | 0.24 | X* | X* | | | | | | |
| | **3560.53** | 0.49 | 70800 | 0.60 | 0.40 | 0.30 | 0.20 | X* | X* | | | | | | |
| **SK 83/33N** | 4542.15 | 0.39 | 70800 | 0.49 | 0.32 | 0.25 | 0.16 | X* | X* | X* | | | | | |
| | 5427.09 | 0.32 | 70800 | 0.41 | 0.27 | 0.21 | 0.14 | X* | X* | X* | | | | | |
| | 6942.82 | 0.25 | 70800 | 0.33 | 0.22 | 0.17 | 0.11 | X* | X* | | | | | | |
| | 8575.90 | 0.2 | 70800 | 0.28 | 0.18 | 0.14 | 0.09 | X* | X* | | | | | | |
| | 10860.37 | 0.16 | 70800 | 0.23 | 0.15 | 0.12 | 0.08 | X* | X* | | | | | | |
| | **12783.24** | 0.14 | 70800 | 0.21 | 0.14 | 0.11 | 0.07 | X* | | | | | | | |
| **SK 83/42** | 126.50 | 14 | 70800 | 15.00 | 9.90 | 7.50 | 4.95 | X | X | X | X | X* | | | |
| | 148.94 | 12 | 70800 | 13.48 | 8.90 | 6.74 | 4.45 | X | X | X | X | X* | | | |
| | 200.37 | 8.7 | 70800 | 9.77 | 6.45 | 4.89 | 3.23 | X | X | X | X* | X* | | | |
| | 235.92 | 7.4 | 70800 | 8.31 | 5.49 | 4.16 | 2.74 | X | X | X | X* | X* | | | |
| | 275.58 | 6.4 | 70800 | 7.19 | 4.75 | 3.59 | 2.37 | X | X | X | X* | X* | | | |
| | 374.99 | 4.7 | 70800 | 5.28 | 3.48 | 2.64 | 1.74 | X | X | X | X* | X* | | | |
| | 437.84 | 4 | 70800 | 4.49 | 2.97 | 2.25 | 1.48 | X | X | X* | X* | X* | | | |
| | 525.40 | 3.3 | 70800 | 3.71 | 2.45 | 1.85 | 1.22 | X | X | X* | X* | X* | | | |

* Caution - The motor power may exceed the gear unit's mechanical torque capacity
◈ The mechanical power limit of the solid input shaft type "W" may limit the reducer rating.
All ratings are mechanical. See page 14 for thermal considerations.

| lb | W | 56C | 140TC | 180TC | 210TC | 250TC |
|---|---|---|---|---|---|---|
| **SK 83/32** | 787 | 783 | 791 | 800 | 800 | – |
| **SK 83/33N** | 794 | 796 | 805 | 814 | – | – |
| **SK 83/42** | 842 | 823 | 831 | 847 | 847 | 899 |


Send Quote Requests to info@automatedpt.com
Call +1(800)985-6929 To Order or Order Online At Nordgearmotors.com

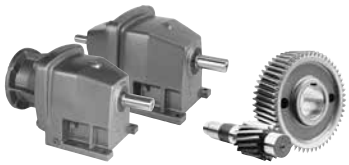

# SK 92 , SK 93
# NEMA-C + W
# Ratings & Combinations



| Model Type | Gear Ratio $i_{tot}$ | Output Speed $n_2$ 1750 rpm [rpm] | Output Torque* $T_{2\,max}$ [lb-in] | Maximum input power◈ Solid input shafts type "W" Input Speed 1750 rpm [hp] | 1150 rpm [hp] | 875 rpm [hp] | 580 rpm [hp] | NEMA C-Face* Available Combinations 56C | 140TC | 180TC | 210TC | 250TC | 280TC | 320TC | 360TC |
|---|---|---|---|---|---|---|---|---|---|---|---|---|---|---|---|
| **SK 92** | 3.51 | 499 | 49312 | 200.00 | 132.00 | 100.00 | 66.00 | | | | | | | | X |
| | 5.68 | 308 | 63826 | 200.00 | 132.00 | 100.00 | 66.00 | | | X | X | X | X | X | X |
| | 6.70 | 261 | 68605 | 200.00 | 132.00 | 100.00 | 66.00 | | | X | X | X | X | X | X |
| | 7.78 | 225 | 53852 | 192.25 | 126.89 | 96.13 | 63.44 | | | X | X | X | X | X | X |
| | 10.50 | 167 | 89491 | 200.00 | 132.00 | 100.00 | 66.00 | | | X | X | X | X | X | X |
| | 12.39 | 141 | 93739 | 200.00 | 132.00 | 100.00 | 66.00 | | | X | X | X | X | X | X |
| | 14.36 | 122 | 95350 | 184.57 | 121.82 | 92.29 | 60.91 | | | X | X | X | X | X | X |
| | 16.47 | 106 | 93925 | 157.97 | 104.26 | 78.99 | 52.13 | | | X | X | X | X | X | X |
| | **29.30** | 60 | 95359 | 90.78 | 59.92 | 45.39 | 29.96 | | | | | | | X | X* |
| | **35.47** | 49 | 85314 | 66.33 | 43.78 | 33.16 | 21.89 | | | | | X | X | | |
| **SK 93** | 19.12 | 92 | 107970 | 100.00 | 66.00 | 50.00 | 33.00 | | | X | X | X | X | X | X |
| | 22.97 | 76 | 107970 | 100.00 | 66.00 | 50.00 | 33.00 | | | X | X | X | X | X | X |
| | 27.05 | 65 | 107970 | 100.00 | 66.00 | 50.00 | 33.00 | | | X | X | X | X | X | X |
| | 31.25 | 56 | 107970 | 95.94 | 63.32 | 47.97 | 31.66 | | | X | X | X | X | X | X |
| | 39.54 | 44 | 107970 | 75.38 | 49.75 | 37.69 | 24.87 | | | X | X | X | X | X | X |
| | 46.57 | 38 | 107970 | 65.10 | 42.97 | 32.55 | 21.48 | | | X | X | X | X | X | X* |
| | 53.80 | 33 | 108413 | 56.77 | 37.47 | 28.38 | 18.73 | | | X | X | X | X | X | X* |
| | 61.63 | 28 | 112395 | 49.93 | 32.96 | 24.97 | 16.48 | | | X | X | X | X | X* | X* |
| | 72.47 | 24 | 118590 | 45.16 | 29.81 | 22.58 | 14.90 | | | X | X | X | X | X* | X* |
| | 93.34 | 19 | 123900 | 37.35 | 24.65 | 18.68 | 12.33 | | | X | X | X | X | | |
| | **109.14** | 16 | 102306 | 25.97 | 17.14 | 12.99 | 8.57 | | | X | X | X | X* | | |
| | **123.05** | 14 | 123458 | 27.42 | 18.10 | 13.71 | 9.05 | | | | | X | X | | |
| | **187.89** | 9.3 | 123723 | 18.26 | 12.05 | 9.13 | 6.02 | | | X | X | X* | X* | | |

* Caution - The motor power may exceed the gear unit's mechanical torque capacity
◈ The mechanical power limit of the solid input shaft type "W" may limit the reducer rating.
All ratings are mechanical. See page 14 for thermal considerations.

| lb | W | 180TC | 210TC | 250TC | 280TC | 320TC | 360TC |
|---|---|---|---|---|---|---|---|
| **SK 92** | 1268 | 1160 | 1215 | 1215 | 1246 | 1279 | 1400 |
| **SK 93** | 1182 | 1184 | 1239 | 1239 | 1270 | 1303 | 1424 |


Send Quote Requests to info@automatedpt.com
Call +1(800)985-6929 To Order or Order Online At Nordgearmotors.com

# SK 93/42, SK 93/43
# SK 93/52 NEMA-C + W
# Ratings & Combinations

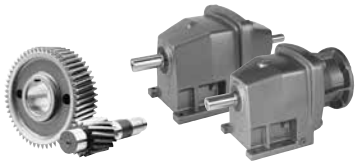

DRIVESYSTEMS

W + NEMA

| Model Type | Gear Ratio | Output Speed | Output Torque* | Maximum input power◈ Solid input shafts type "W" | | | | NEMA C-Face* Available Combinations | | | | | | | |
|---|---|---|---|---|---|---|---|---|---|---|---|---|---|---|---|
| | | | | Input Speed | | | | | | | | | | | |
| | $i_{tot}$ | $n_2$ 1750 rpm | $T_{2\,max}$ | 1750 rpm | 1150 rpm | 875 rpm | 580 rpm | | | | | | | | |
| | | [rpm] | [lb-in] | [hp] | [hp] | [hp] | [hp] | 56C | 140TC | 180TC | 210TC | 250TC | 280TC | 320TC | 360TC |
| **SK 93/42** | 181.16 | 9.7 | 107970 | 15.00 | 9.90 | 7.50 | 4.95 | X | X | X | X | X* | | | |
| | 239.74 | 7.3 | 107970 | 12.51 | 8.25 | 6.25 | 4.13 | X | X | X | X | X* | | | |
| | 287.83 | 6.1 | 107970 | 10.45 | 6.90 | 5.23 | 3.45 | X | X | X | X | X* | | | |
| | 333.02 | 5.3 | 107970 | 9.08 | 5.99 | 4.54 | 3.00 | X | X | X | X* | X* | | | |
| | 457.30 | 3.8 | 107970 | 6.51 | 4.30 | 3.25 | 2.15 | X | X | X | X* | X* | | | |
| | 548.76 | 3.2 | 107970 | 5.48 | 3.62 | 2.74 | 1.81 | X | X | X | X* | X* | | | |
| | 756.82 | 2.3 | 107970 | 3.94 | 2.60 | 1.97 | 1.30 | X | X | X* | X* | X* | | | |
| | 813.46 | 2.2 | 107970 | 3.77 | 2.49 | 1.88 | 1.24 | X | X | X* | X* | X* | | | |
| | 1091.47 | 1.6 | 107970 | 2.74 | 1.81 | 1.37 | 0.90 | X | X | X* | X* | X* | | | |
| | 1298.54 | 1.3 | 107970 | 2.23 | 1.47 | 1.11 | 0.73 | X | X | X* | X* | | | | |
| | **1641.59** | 1.1 | 107970 | 1.88 | 1.24 | 0.94 | 0.62 | | | X* | X* | | | | |
| **SK 93/43** | 2204.72 | 0.79 | 107970 | 1.35 | 0.89 | 0.68 | 0.45 | X | X* | X* | | | | | |
| | 2713.63 | 0.64 | 107970 | 1.10 | 0.72 | 0.55 | 0.36 | X | X* | X* | | | | | |
| | 3724.20 | 0.47 | 107970 | 0.86 | 0.57 | 0.43 | 0.28 | X* | X* | X* | | | | | |
| | 4302.39 | 0.41 | 107970 | 0.76 | 0.50 | 0.38 | 0.25 | X* | X* | X* | | | | | |
| | 5782.96 | 0.3 | 107970 | 0.57 | 0.37 | 0.28 | 0.19 | X* | X* | X* | | | | | |
| | 6961.72 | 0.25 | 107970 | 0.48 | 0.32 | 0.24 | 0.16 | X* | X* | X* | | | | | |
| | 8512.06 | 0.21 | 107970 | 0.41 | 0.27 | 0.21 | 0.14 | X* | X* | | | | | | |
| | **11264.73** | 0.16 | 107970 | 0.33 | 0.22 | 0.16 | 0.11 | X* | X* | | | | | | |
| | **13913.25** | 0.13 | 107970 | 0.28 | 0.18 | 0.14 | 0.09 | X* | X* | | | | | | |
| **SK 93/52** | 106.25 | 16 | 107970 | 25.00 | 16.50 | 12.50 | 8.25 | | | | | X | X* | | |
| | 127.50 | 14 | 107970 | 23.98 | 15.83 | 11.99 | 7.91 | | | X | X | X | X* | | |
| | 161.32 | 11 | 107970 | 18.84 | 12.44 | 9.42 | 6.22 | | | X | X | X* | X* | | |

* Caution - The motor power may exceed the gear unit's mechanical torque capacity
◈ The mechanical power limit of the solid input shaft type "W" may limit the reducer rating.
All ratings are mechanical. See page 14 for thermal considerations.

| lb | W | 56C | 140TC | 180TC | 210TC | 250TC | 280TC |
|---|---|---|---|---|---|---|---|
| **SK 93/42** | 1237 | 1217 | 1226 | 1241 | 1241 | 1294 | – |
| **SK 93/43** | 1247 | 1243 | 1252 | 1261 | – | – | – |
| **SK 93/52** | 1301 | – | – | 1305 | 1305 | 1358 | 1358 |


Send Quote Requests to info@automatedpt.com
Call +1(800)985-6929 To Order or Order Online At Nordgearmotors.com

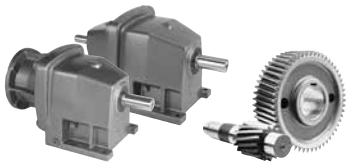

# SK 102 , SK 103
# NEMA-C + W
# Ratings & Combinations



| Model Type | Gear Ratio $i_{tot}$ | Output Speed $n_2$ 1750 rpm [rpm] | Output Torque* $T_{2\,max}$ [lb-in] | Maximum input power◈ Solid input shafts type "W" Input Speed 1750 rpm [hp] | 1150 rpm [hp] | 875 rpm [hp] | 580 rpm [hp] | NEMA C-Face* Available Combinations 56C | 140TC | 180TC | 210TC | 250TC | 280TC | 320TC | 360TC |
|---|---|---|---|---|---|---|---|---|---|---|---|---|---|---|---|
| **SK 102** | 4.28 | 409 | 83075 | 268.00 | 176.88 | 134.00 | 88.44 | | | | | | | | |
| | 5.23 | 335 | 93828 | 268.00 | 176.88 | 134.00 | 88.44 | | | | | | | | X |
| | 6.24 | 280 | 101695 | 268.00 | 176.88 | 134.00 | 88.44 | | | | | | | | X |
| | 7.50 | 233 | 99740 | 268.00 | 176.88 | 134.00 | 88.44 | | | | | | | | X |
| | 9.96 | 176 | 132785 | 268.00 | 176.88 | 134.00 | 88.44 | | | | | | | | X |
| | 11.88 | 147 | 139591 | 268.00 | 176.88 | 134.00 | 88.44 | | | | | | | | X |
| | 14.29 | 122 | 147087 | 268.00 | 176.88 | 134.00 | 88.44 | | | | | | | | X |
| | 16.63 | 105 | 153698 | 256.06 | 169.00 | 128.03 | 84.50 | | | | | | | | X |
| | 19.37 | 90 | 148751 | 212.42 | 140.20 | 106.21 | 70.10 | | | | | | | | X |
| **SK 103** | 21.19 | 83 | 177000 | 150.00 | 99.00 | 75.00 | 49.50 | | | X | X | X | X | X | X |
| | 25.30 | 69 | 177000 | 150.00 | 99.00 | 75.00 | 49.50 | | | X | X | X | X | X | X |
| | 29.62 | 59 | 177000 | 150.00 | 99.00 | 75.00 | 49.50 | | | X | X | X | X | X | X |
| | 37.90 | 46 | 177000 | 129.19 | 85.26 | 64.59 | 42.63 | | | X | X | X | X | X | X |
| | 45.25 | 39 | 177000 | 109.53 | 72.29 | 54.76 | 36.14 | | | X | X | X | X | X | X |
| | 52.98 | 33 | 177000 | 92.68 | 61.17 | 46.34 | 30.58 | | | X | X | X | X | X | X |
| | 60.71 | 29 | 177000 | 81.44 | 53.75 | 40.72 | 26.88 | | | X | X | X | X | X | X |
| | 70.38 | 25 | 177000 | 70.21 | 46.34 | 35.11 | 23.17 | | | X | X | X | X | X | X |
| | 81.40 | 21 | 181425 | 60.45 | 39.90 | 30.23 | 19.95 | | | X | X | X | X | X | X* |
| | **112.53** | 16 | 204966 | 52.03 | 34.34 | 26.02 | 17.17 | | | | | | | X | |
| | **136.51** | 13 | 203550 | 41.99 | 27.71 | 20.99 | 13.86 | | | | | X | X | | |
| | **207.47** | 8.4 | 204966 | 27.32 | 18.03 | 13.66 | 9.01 | | | X | X | X | X* | | |

* Caution - The motor power may exceed the gear unit's mechanical torque capacity
◈ The mechanical power limit of the solid input shaft type "W" may limit the reducer rating.
All ratings are mechanical. See page 14 for thermal considerations.

| lb | W | 180TC | 210TC | 250TC | 280TC | 320TC | 360TC |
|---|---|---|---|---|---|---|---|
| **SK 102** | 1810 | – | – | – | - | - | 2064 |
| **SK 103** | 1830 | 1667 | 1722 | 1753 | 1887 | 1887 | 2083 |


Send Quote Requests to info@automatedpt.com
Call +1(800)985-6929 To Order or Order Online At Nordgearmotors.com

# SK 103/52, SK 103/53
# NEMA-C + W
# Ratings & Combinations

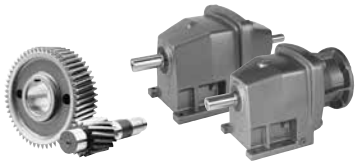

DRIVESYSTEMS

W + NEMA

| Model Type | Gear Ratio | Output Speed | Output Torque* | Maximum input power◈ Solid input shafts type "W" | | | | NEMA C-Face* Available Combinations | | | | | | | |
|---|---|---|---|---|---|---|---|---|---|---|---|---|---|---|---|
| | | | | Input Speed | | | | | | | | | | | |
| | $i_{tot}$ | $n_2$ 1750 rpm | $T_{2\ max}$ | 1750 rpm | 1150 rpm | 875 rpm | 580 rpm | | | | | | | | |
| | | [rpm] | [lb-in] | [hp] | [hp] | [hp] | [hp] | 56C | 140TC | 180TC | 210TC | 250TC | 280TC | 320TC | 360TC |
| **SK 103/52** | 105.36 | 17 | 177000 | 30.00 | 19.80 | 15.00 | 9.90 | | | | | X | X | | |
| | 122.42 | 14 | 177000 | 30.00 | 19.80 | 15.00 | 9.90 | | | | | X | X | | |
| | 154.63 | 11 | 177000 | 30.00 | 19.80 | 15.00 | 9.90 | | | X | X | X | X | | |
| | 184.62 | 9.5 | 177000 | 26.68 | 17.61 | 13.34 | 8.80 | | | X | X | X | X* | | |
| | 244.77 | 7.1 | 177000 | 19.94 | 13.16 | 9.97 | 6.58 | | | X | X | X* | X* | | |
| | 296.69 | 5.9 | 177000 | 16.57 | 10.94 | 8.28 | 5.47 | X | X | X | X | X* | X* | | |
| | 340.13 | 5.1 | 177000 | 14.32 | 9.45 | 7.16 | 4.73 | | | X | X | X* | X* | | |
| | 467.81 | 3.7 | 177000 | 10.39 | 6.86 | 5.20 | 3.43 | X | X | X | X | X* | X* | | |
| | 642.31 | 2.7 | 177000 | 7.58 | 5.00 | 3.79 | 2.50 | X | X | X | X* | X* | X* | | |
| | 816.55 | 2.1 | 177000 | 5.90 | 3.89 | 2.95 | 1.95 | X | X | X | X* | X* | X* | | |
| | 943.57 | 1.9 | 177000 | 5.34 | 3.52 | 2.67 | 1.76 | X | X | X | X* | X* | X* | | |
| | 1148.61 | 1.5 | 177000 | 4.21 | 2.78 | 2.11 | 1.39 | X | X | X* | X* | X* | X* | | |
| | 1412.72 | 1.2 | 177000 | 3.37 | 2.22 | 1.69 | 1.11 | X | X | X* | X* | | | | |
| | **1701.72** | 1.0 | 177000 | 2.81 | 1.85 | 1.40 | 0.93 | | | X* | X* | | | | |
| | **2037.08** | 0.86 | 177000 | 2.42 | 1.59 | 1.21 | 0.80 | | | X* | X* | | | | |
| **SK 103/53** | 2722.11 | 0.64 | 177000 | 1.50 | 0.99 | 0.75 | 0.50 | X | X* | X* | X | | | | |
| | 3462.24 | 0.51 | 177000 | 1.43 | 0.95 | 0.72 | 0.47 | X | X* | X* | X | | | | |
| | 4220.92 | 0.41 | 177000 | 1.15 | 0.76 | 0.58 | 0.38 | X | X* | X* | X | | | | |
| | 5797.20 | 0.30 | 177000 | 0.90 | 0.59 | 0.45 | 0.30 | X* | X* | X* | X | | | | |
| | 7149.21 | 0.24 | 177000 | 0.73 | 0.48 | 0.36 | 0.24 | X* | X* | X* | X | | | | |
| | 8459.94 | 0.21 | 177000 | 0.64 | 0.42 | 0.32 | 0.21 | X* | X* | X* | | | | | |
| | 11277.49 | 0.16 | 177000 | 0.50 | 0.33 | 0.25 | 0.17 | X* | X* | X* | | | | | |
| | 14340.31 | 0.12 | 177000 | 0.39 | 0.26 | 0.20 | 0.13 | X* | X* | X* | | | | | |

* Caution - The motor power may exceed the gear unit's mechanical torque capacity
◈ The mechanical power limit of the solid input shaft type "W" may limit the reducer rating.
All ratings are mechanical. See page 14 for thermal considerations.

| lb | W | 56C | 140TC | 180TC | 210TC | 250TC | 280TC |
|---|---|---|---|---|---|---|---|
| **SK 103/52** | 1784 | 1764 | 1773 | 1788 | 1788 | 1841 | 1841 |
| **SK 103/53** | 1803 | 1799 | 1808 | 1817 | 1817 | – | – |


Send Quote Requests to info@automatedpt.com
Call +1(800)985-6929 To Order or Order Online At Nordgearmotors.com

# In-line Dimensions

## Dimensions

- Gearmotors
- Reducers > C-Face
- Reducers > Input Shaft
- Options
- Shafts

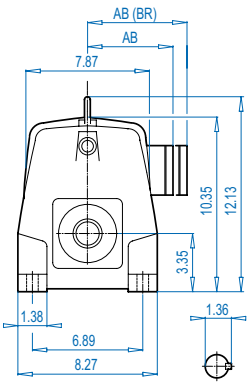


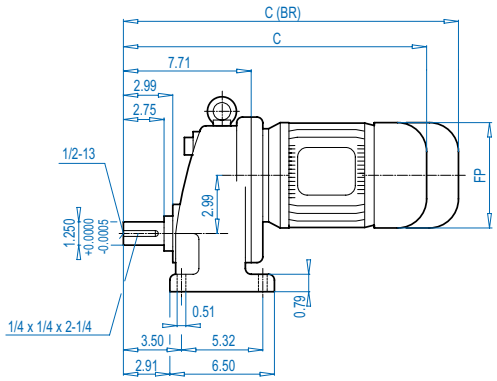


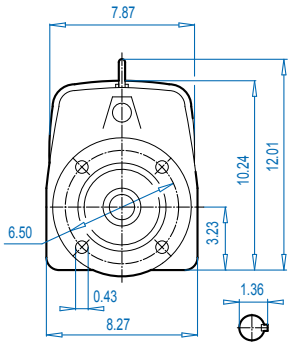


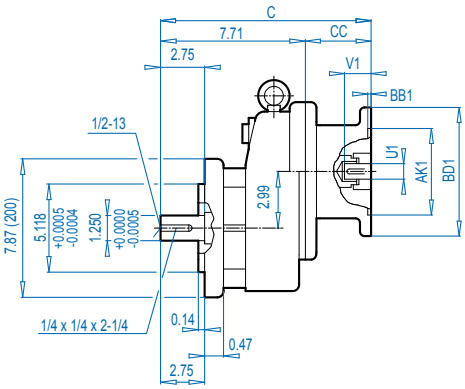


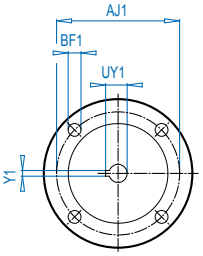


DRIVESYSTEMS

www.nord.com

UNICASE™

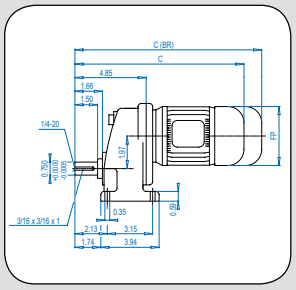

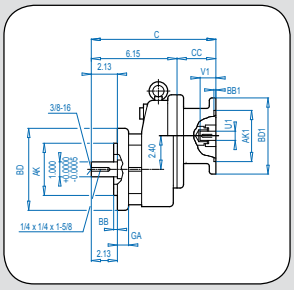

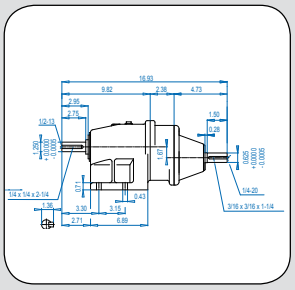

# SK 11E + Motor
# SK 11EF + Motor

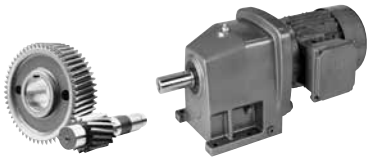

DRIVESYSTEMS



## SK 11E

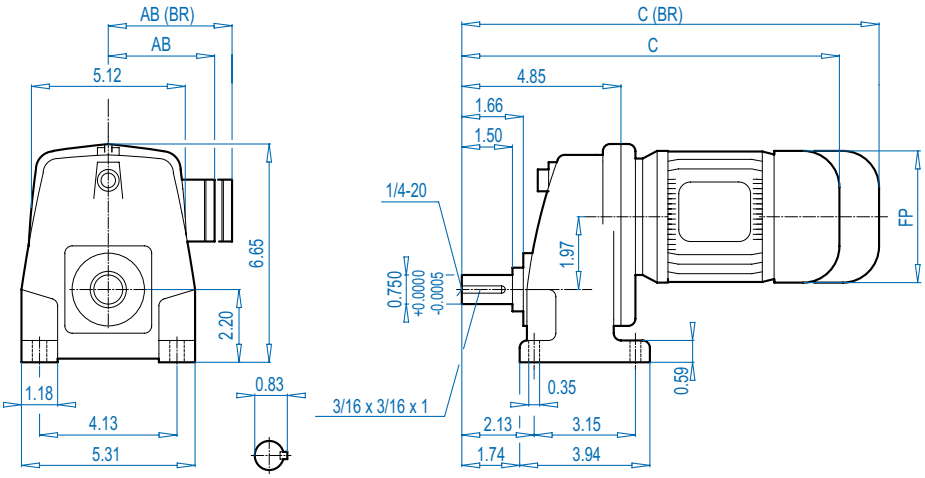


## SK 11EF

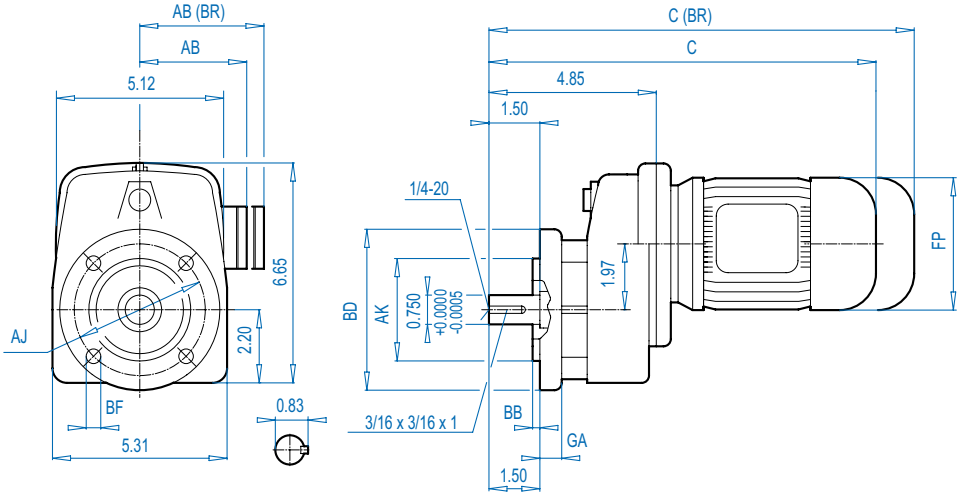


ALTERNATE SHAFTS SEE PAGE 239

### Mounting Flange

| BD (mm) | AJ | AK | BB | BF | GA |
|---|---|---|---|---|---|
| 4.72 (120) | 3.94 | 3.150 $^{+0.0005}_{-0.0004}$ | 0.12 | 0.28 | 0.39 |
| 5.51 (140) | 4.53 | 3.740 $^{+0.0005}_{-0.0004}$ | 0.12 | 0.35 | 0.39 |

### Motor Dimensions

| Standard efficiency | 63S/L | 71S/L | 80S/L | 90S/L | 100L | 112M | | For Other Connection Possibilities please see ⇨📖 236 |
|---|---|---|---|---|---|---|---|---|
| Energy efficiency | | | 80LH | 90SH/LH | 100LH | | 112MH | |
| **AB** | 4.53 | 4.88 | 5.59 | 5.79 | 6.65 | 7.05 | 7.05 | |
| **AB (BR)** | 4.84 | 5.24 | 5.63 | 5.83 | 6.26 | 6.69 | 6.69 | |
| **C** | 12.56 | 14.13 | 15.11 | 16.73 | 17.91 | 18.82 | 19.79 | |
| **C (BR)** | 14.76 | 16.41 | 17.63 | 19.68 | 21.49 | 22.48 | 23.45 | |
| **FP** | 4.84 | 5.43 | 6.14 | 6.92 | 7.63 | 8.58 | 8.58 | |



**(BR)** denotes Brakemotor


Send Quote Requests to info@automatedpt.com
Call +1(800)985-6929 To Order or Order Online At Nordgearmotors.com

DRIVESYSTEMS

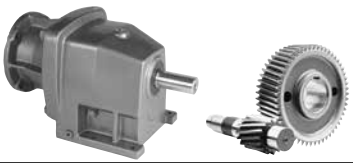

# SK 11E + NEMA
# SK 11EF + NEMA



## SK 11E

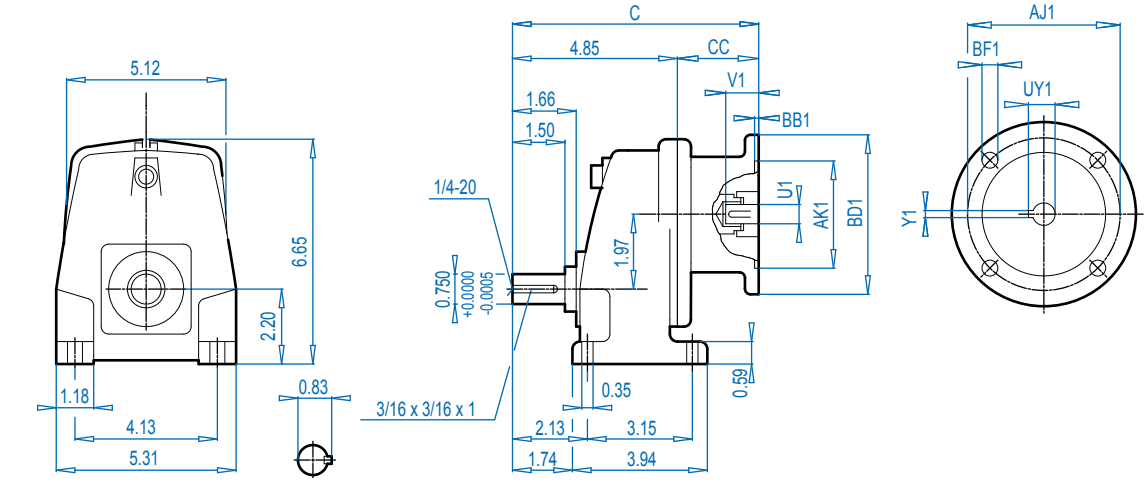


## SK 11EF

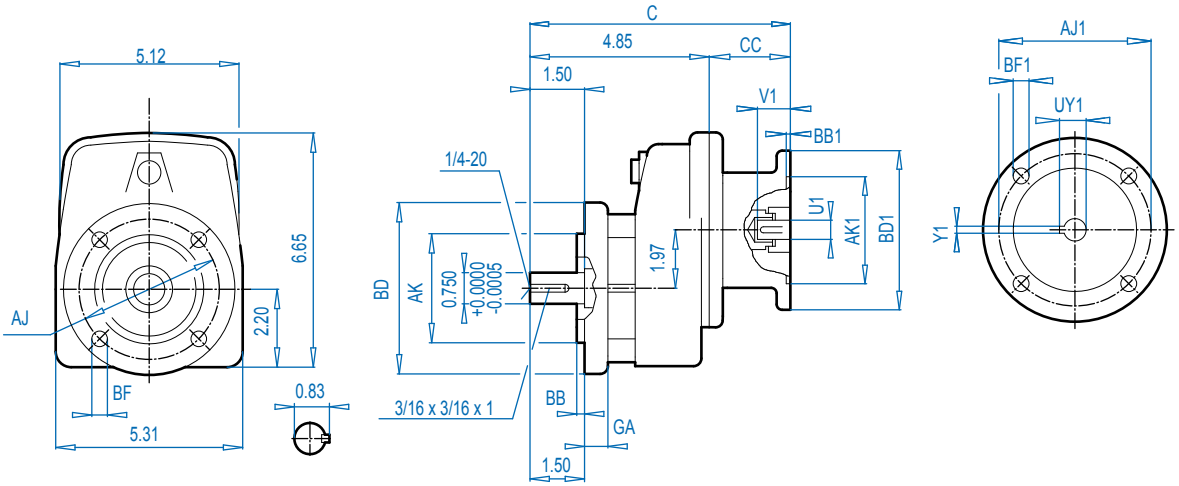


### Mounting Flange

| BD (mm) | AJ | AK | BB | BF | GA |
|---|---|---|---|---|---|
| 4.72 (120) | 3.94 | 3.150 $^{+0.0005}_{-0.0004}$ | 0.12 | 0.28 | 0.39 |
| 5.51 (140) | 4.53 | 3.740 $^{+0.0005}_{-0.0004}$ | 0.12 | 0.35 | 0.39 |

### NEMA Dimensions

| Type | AJ1 | AK1 | BB1 | BD1 | BF1 | U1 | V1 | UY1 | Y1 | C | CC |
|---|---|---|---|---|---|---|---|---|---|---|---|
| **56C** | 5.88 | 4.500 | 0.18 | 6.54 | 0.43 | 0.625 | 2.06 | 0.71 | 0.188 | 9.35 | 4.50 |
| **140TC** | 5.88 | 4.500 | 0.18 | 6.54 | 0.43 | 0.875 | 2.12 | 0.96 | 0.188 | 9.28 | 4.45 |
| **180TC** | 7.25 | 8.500 | 0.23 | 9.17 | 0.59 | 1.125 | 2.62 | 1.24 | 0.250 | 10.48 | 5.65 |

ALTERNATE SHAFTS SEE PAGE 239


Send Quote Requests to info@automatedpt.com
Call +1(800)985-6929 To Order or Order Online At Nordgearmotors.com

# SK 11E - W
# SK 11EF - W

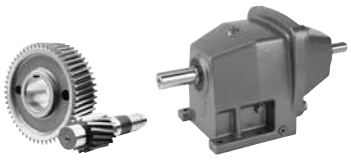

DRIVESYSTEMS



## SK 11E

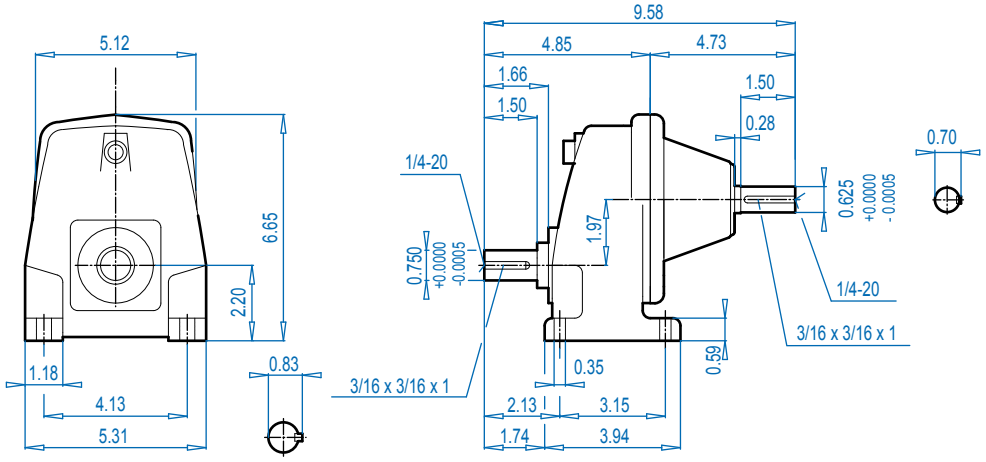


## SK 11EF

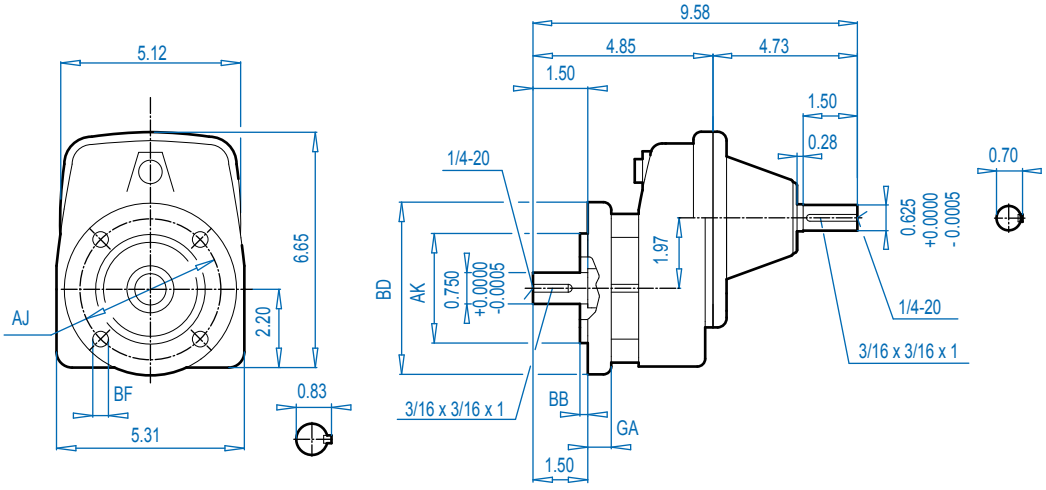


ALTERNATE SHAFTS SEE PAGE 239

### Mounting Flange

| BD (mm) | AJ | AK | BB | BF | GA |
|---|---|---|---|---|---|
| 4.72 (120) | 3.94 | $3.150^{+0.0005}_{-0.0004}$ | 0.12 | 0.28 | 0.39 |
| 5.51 (140) | 4.53 | $3.740^{+0.0005}_{-0.0004}$ | 0.12 | 0.35 | 0.39 |


Send Quote Requests to info@automatedpt.com
Call +1(800)985-6929 To Order or Order Online At Nordgearmotors.com

DRIVESYSTEMS



# SK 21E + Motor
# SK 21EF + Motor



## SK 21E

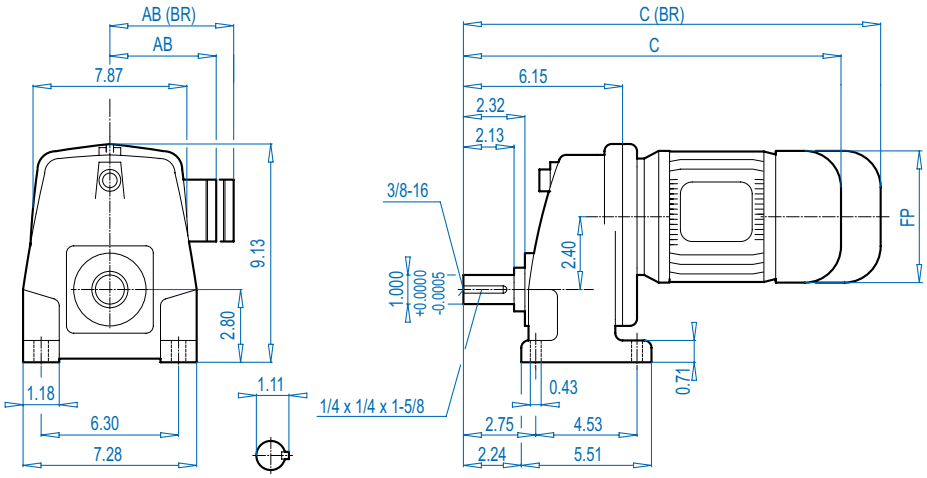


## SK 21EF

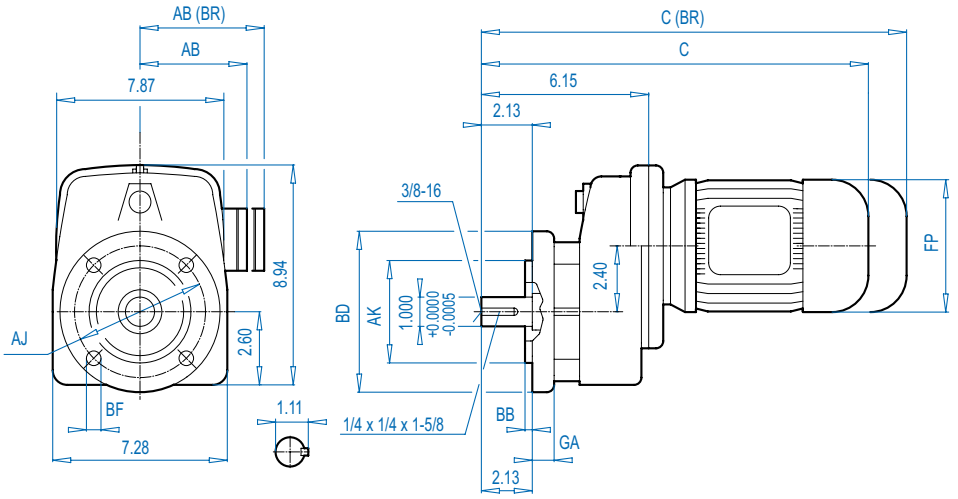


ALTERNATE SHAFTS SEE PAGE 239

### Mounting Flange

| BD (mm) | AJ | AK | BB | BF | GA |
|---|---|---|---|---|---|
| 5.51 (140) | 4.53 | 3.740 $^{+0.0005}_{-0.0004}$ | 0.12 | 0.35 | 0.39 |
| 6.30 (160) | 5.12 | 4.331 $^{+0.0005}_{-0.0004}$ | 0.14 | 0.35 | 0.39 |

### Motor Dimensions

| Standard efficiency | 100L | 112M | | | | | For Other Connection Possibilities please see ⇨ 236 |
|---|---|---|---|---|---|---|---|
| Energy efficiency | 100LH | | 112MH | | | | |
| AB | 6.65 | 7.05 | 7.05 | | | |  |
| AB (BR) | 6.26 | 6.69 | 6.69 | | | | |
| C | 18.96 | 19.87 | 20.84 | | | | |
| C (BR) | 22.55 | 23.53 | 24.50 | | | | |
| FP | 7.63 | 8.58 | 8.58 | | | | |

**(BR)** denotes Brakemotor


Send Quote Requests to info@automatedpt.com
Call +1(800)985-6929 To Order or Order Online At Nordgearmotors.com

# SK 21E + NEMA
# SK 21EF + NEMA

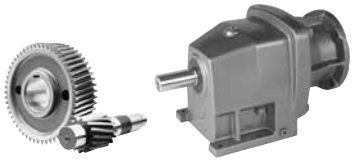

DRIVESYSTEMS



## SK 21E

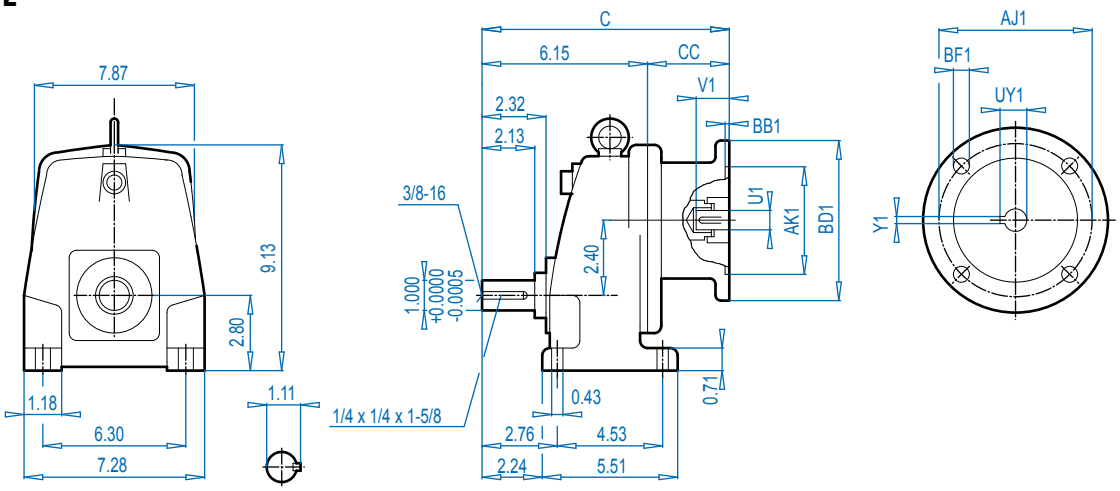


## SK 21EF

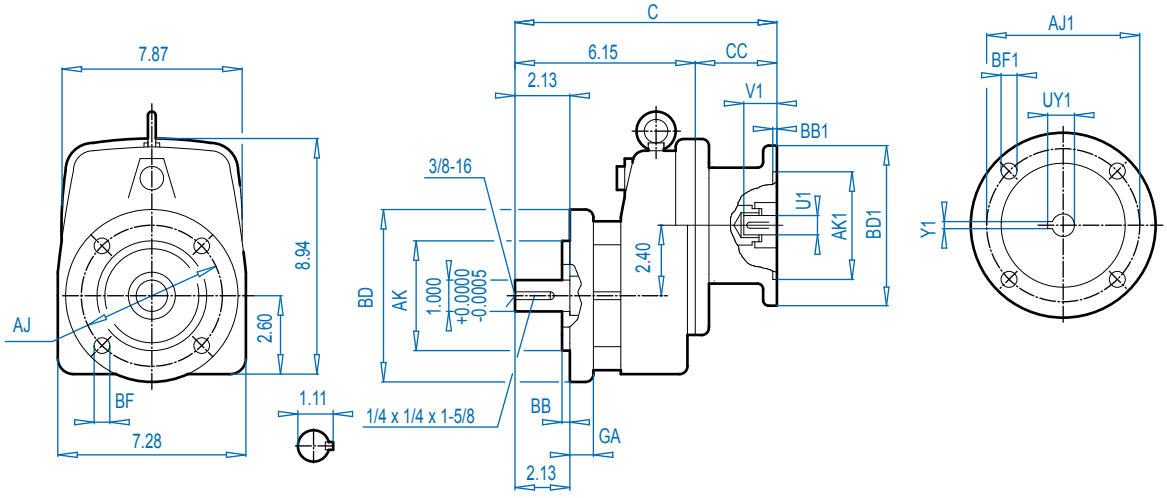


ALTERNATE SHAFTS SEE PAGE 239

### Mounting Flange

| BD (mm) | AJ | AK | BB | BF | GA |
|---|---|---|---|---|---|
| 5.51 (140) | 4.53 | 3.740 $^{+0.0005}_{-0.0004}$ | 0.12 | 0.35 | 0.39 |
| 6.30 (160) | 5.12 | 4.331 $^{+0.0005}_{-0.0004}$ | 0.14 | 0.35 | 0.39 |

### NEMA Dimensions

| Type | AJ1 | AK1 | BB1 | BD1 | BF1 | U1 | V1 | UY1 | Y1 | C | CC |
|---|---|---|---|---|---|---|---|---|---|---|---|
| **56C** | 5.88 | 4.500 | 0.18 | 6.54 | 0.43 | 0.625 | 2.06 | 0.71 | 0.188 | 10.73 | 4.61 |
| **140TC** | 5.88 | 4.500 | 0.18 | 6.54 | 0.43 | 0.875 | 2.12 | 0.96 | 0.188 | 10.73 | 4.61 |
| **180TC** | 7.25 | 8.500 | 0.23 | 9.17 | 0.59 | 1.125 | 2.62 | 1.24 | 0.250 | 11.63 | 4.61 |


Send Quote Requests to info@automatedpt.com
Call +1(800)985-6929 To Order or Order Online At Nordgearmotors.com

DRIVESYSTEMS

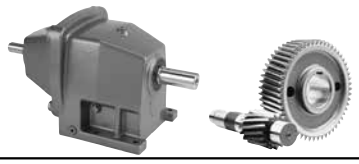

# SK 21E - W
# SK 21EF - W



## SK 21E

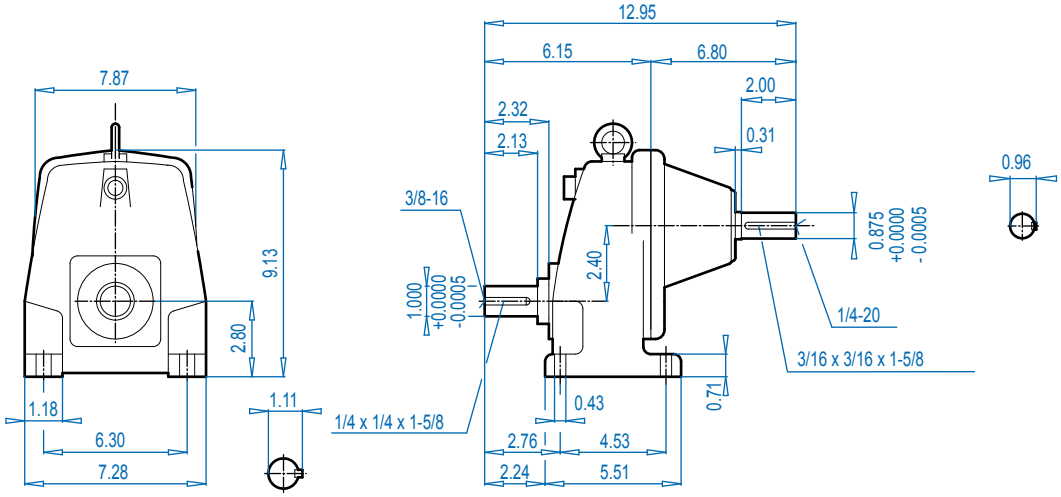


## SK 21EF

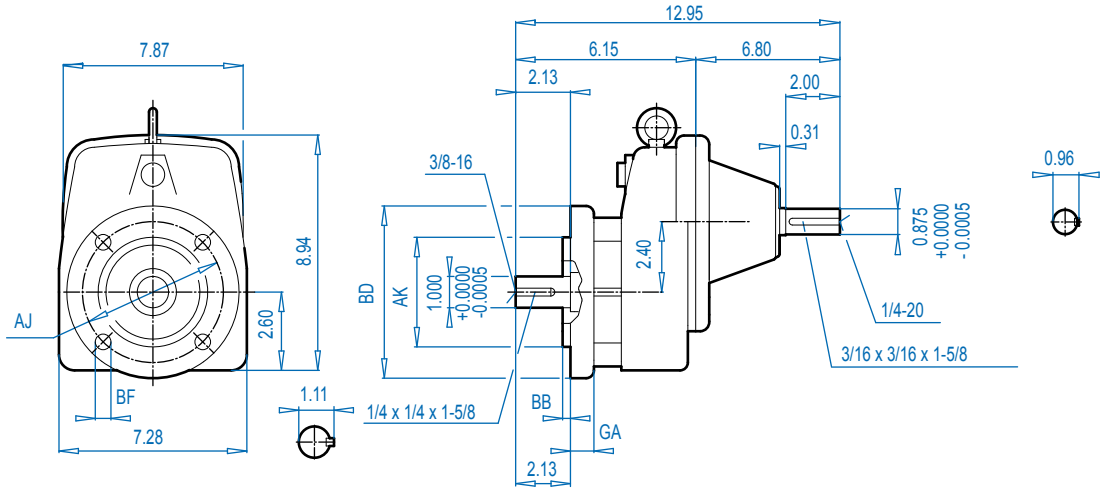


### Mounting Flange

| BD (mm) | AJ | AK | BB | BF | GA |
|---|---|---|---|---|---|
| 5.51 (140) | 4.53 | 3.740 $^{+0.0005}_{-0.0004}$ | 0.12 | 0.35 | 0.39 |
| 6.30 (160) | 5.12 | 4.331 $^{+0.0005}_{-0.0004}$ | 0.14 | 0.35 | 0.39 |

ALTERNATE SHAFTS SEE PAGE 239


Send Quote Requests to info@automatedpt.com
Call +1(800)985-6929 To Order or Order Online At Nordgearmotors.com

# SK 31E + Motor
# SK 31EF + Motor

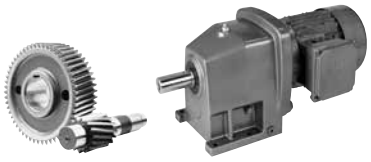

DRIVESYSTEMS



## SK 31E

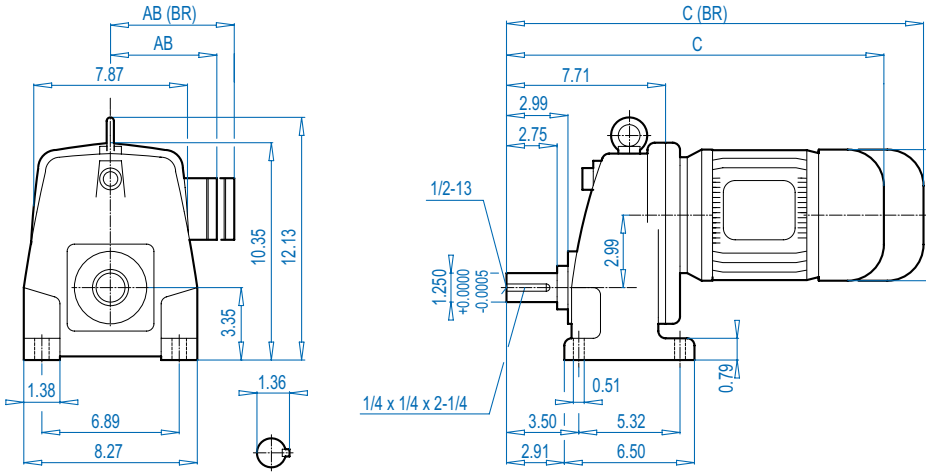


## SK 31EF

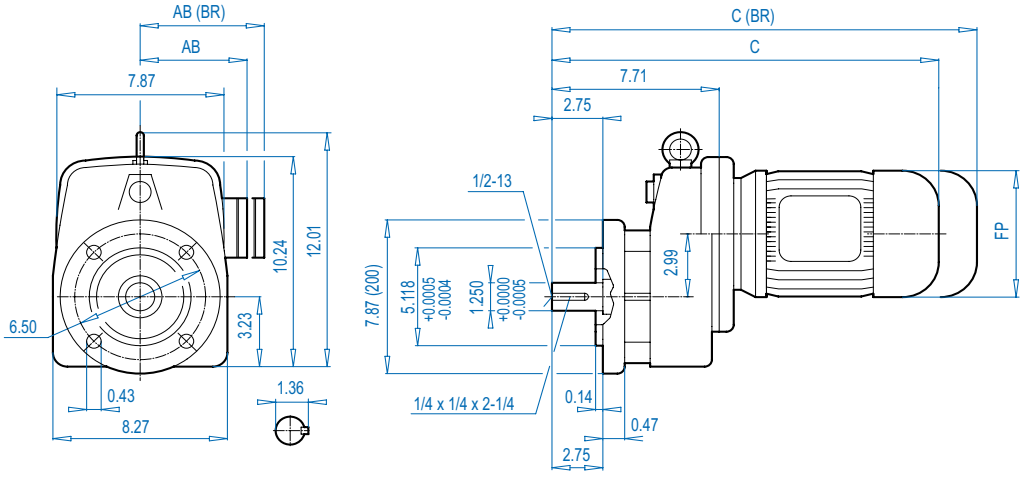


ALTERNATE SHAFTS SEE PAGE 239

### Motor Dimensions

| Standard efficiency | 100L | 112M | | 132S/M | | | For Other Connection Possibilities please see ⇨📖 236 |
|---|---|---|---|---|---|---|---|
| Energy efficiency | 100LH | | 112MH | 132SH/MH | | | |
| AB | 6.65 | 7.05 | 7.05 | 8.03 | | |  |
| AB (BR) | 6.26 | 6.69 | 6.69 | 7.72 | | | |
| C | 20.54 | 21.44 | 22.41 | 24.83 | | | |
| C (BR) | 24.12 | 25.11 | 26.08 | 29.04 | | | |
| FP | 7.63 | 8.58 | 8.58 | 10.16 | | | |

**(BR)** denotes Brakemotor


Send Quote Requests to info@automatedpt.com
Call +1(800)985-6929 To Order or Order Online At Nordgearmotors.com

DRIVESYSTEMS

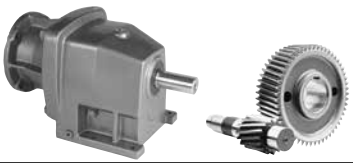

# SK 31E + NEMA
# SK 31EF + NEMA



## SK 31E

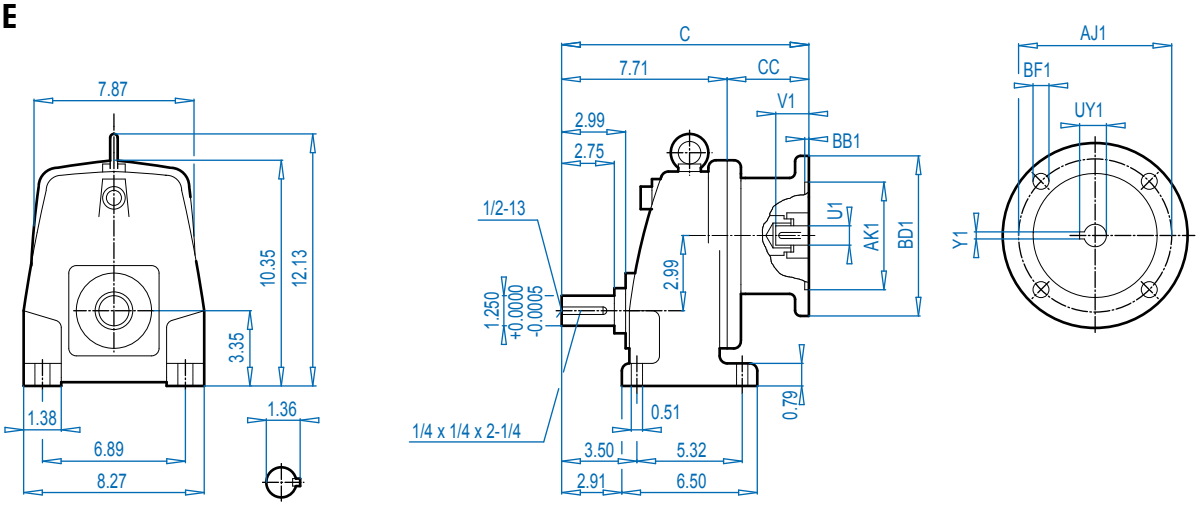


## SK 31EF

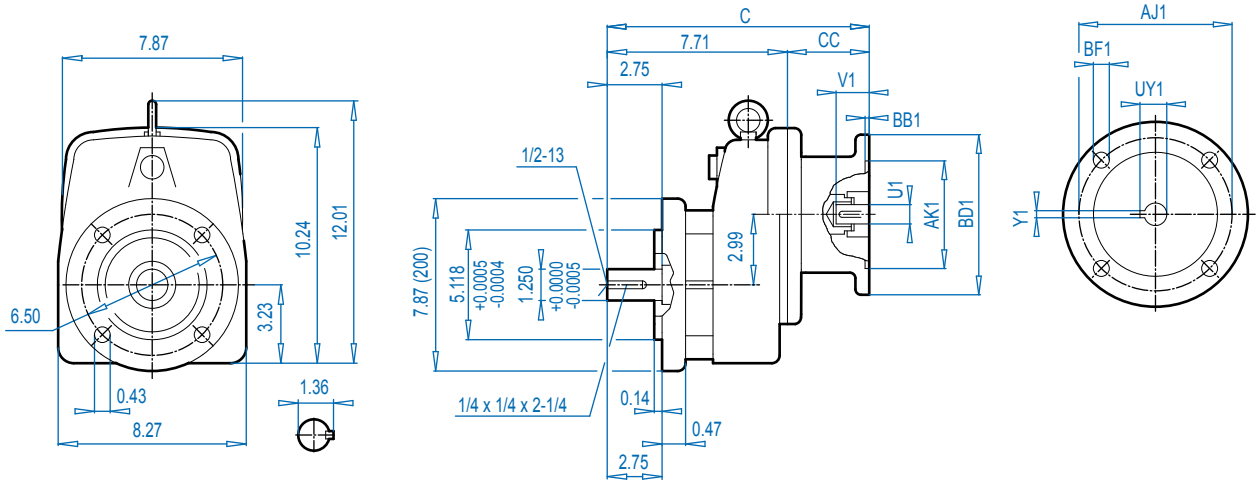


ALTERNATE SHAFTS SEE PAGE 239

**NEMA Dimensions**

| Type | AJ1 | AK1 | BB1 | BD1 | BF1 | U1 | V1 | UY1 | Y1 | C | CC |
|---|---|---|---|---|---|---|---|---|---|---|---|
| **56C** | 5.88 | 4.500 | 0.18 | 6.54 | 0.43 | 0.625 | 2.06 | 0.71 | 0.188 | 12.30 | 4.61 |
| **140TC** | 5.88 | 4.500 | 0.18 | 6.54 | 0.43 | 0.875 | 2.12 | 0.96 | 0.188 | 12.30 | 4.61 |
| **180TC** | 7.25 | 8.500 | 0.23 | 9.17 | 0.59 | 1.125 | 2.62 | 1.24 | 0.250 | 14.33 | 6.65 |
| **210TC** | 7.25 | 8.500 | 0.39 | 9.17 | 0.59 | 1.375 | 3.12 | 1.52 | 0.312 | 14.33 | 6.65 |


Send Quote Requests to info@automatedpt.com
Call +1(800)985-6929 To Order or Order Online At Nordgearmotors.com

Send Quote Requests to info@automatedpt.com
Call +1(800)985-6929 To Order or Order Online At Nordgearmotors.com

# SK 31E - W
# SK 31EF - W

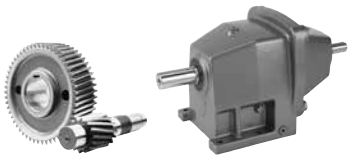

DRIVESYSTEMS



## SK 31E

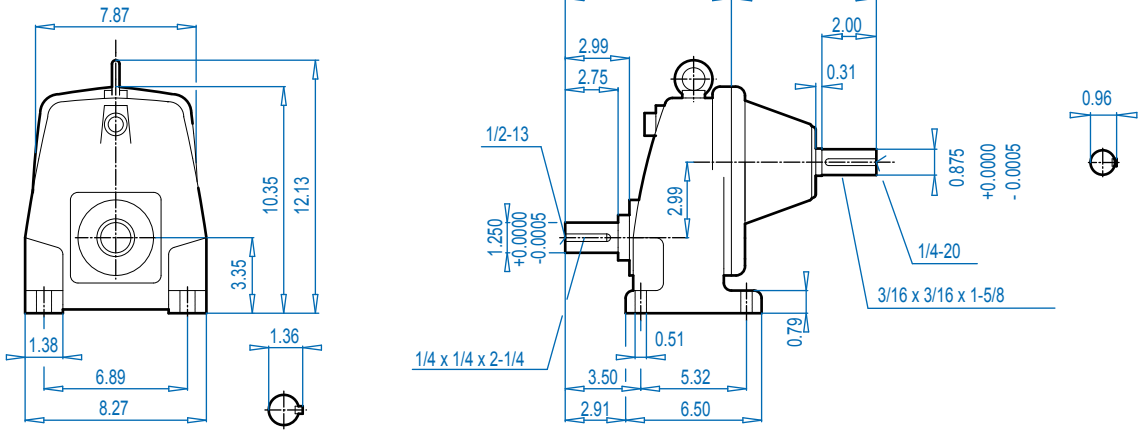


## SK 31EF

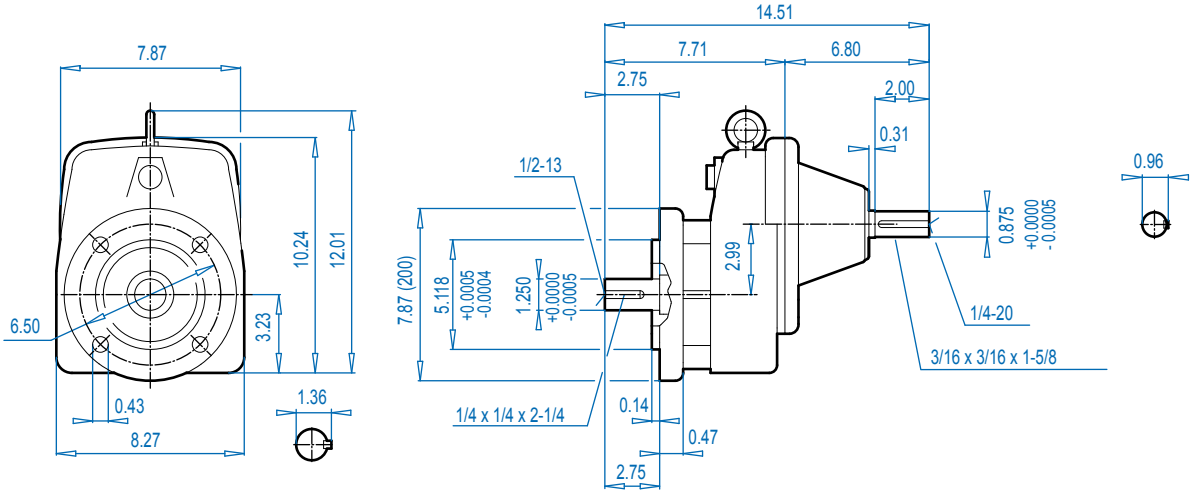


ALTERNATE SHAFTS SEE PAGE 239


Send Quote Requests to info@automatedpt.com
Call +1(800)985-6929 To Order or Order Online At Nordgearmotors.com

Send Quote Requests to info@automatedpt.com
Call +1(800)985-6929 To Order or Order Online At Nordgearmotors.com

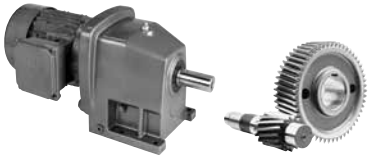

# SK 41E + Motor
# SK 41EF + Motor



## SK 41E

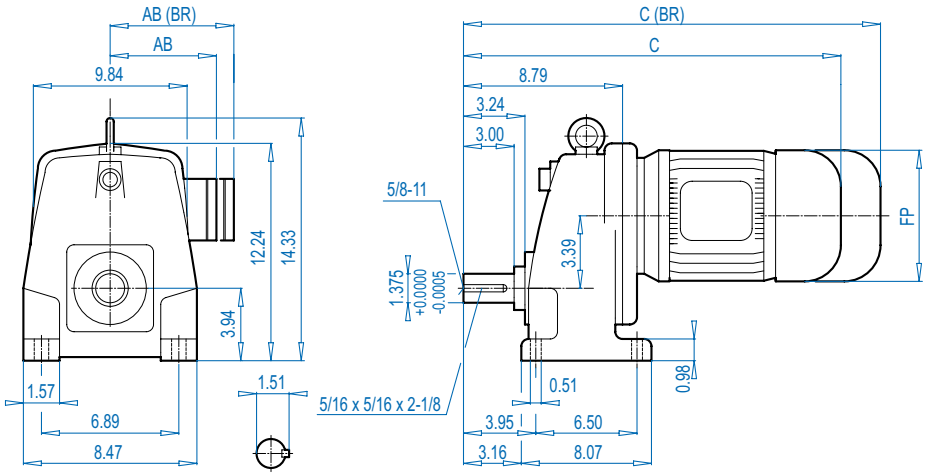


## SK 41EF

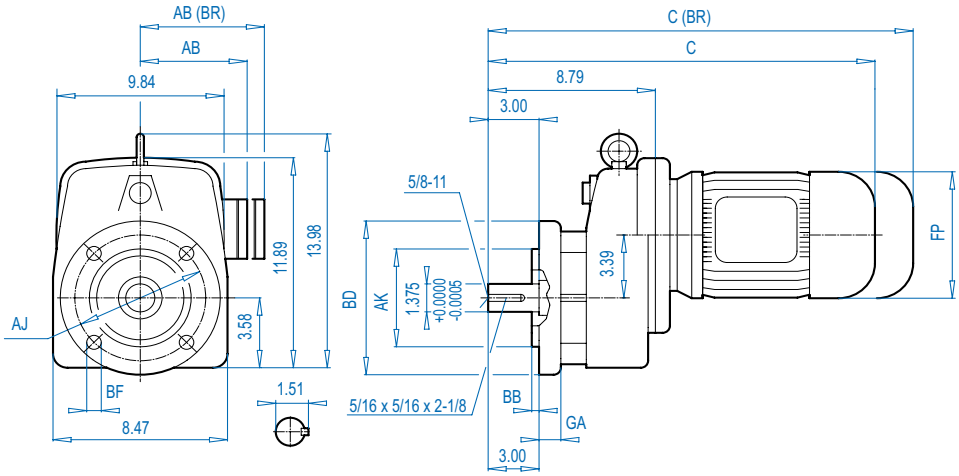


ALTERNATE SHAFTS SEE PAGE 239

### Mounting Flange

| BD (mm) | AJ | AK | BB | BF | GA |
|---|---|---|---|---|---|
| 7.87 (200) | 6.50 | 5.118 $^{+0.0005}_{-0.0004}$ | 0.14 | 0.43 | 0.55 |
| 9.84 (250) | 8.46 | 7.087 $^{+0.0005}_{-0.0004}$ | 0.16 | 0.55 | 0.63 |

### Motor Dimensions

| Standard efficiency | 132S/M | 160M/L | | | | | For Other Connection Possibilities please see ⇨🕮 236 |
|---|---|---|---|---|---|---|---|
| Energy efficiency | 132SH/MH | 160MH | 160LH | | | | |
| **AB** | 8.03 | 8.90 | 8.90 | | | |  |
| **AB (BR)** | 7.72 | 8.90 | 8.90 | | | | |
| **C** | 25.12 | 27.60 | 29.17 | | | | |
| **C (BR)** | 29.33 | 34.17 | 35.91 | | | | |
| **FP** | 10.16 | 12.60 | 12.60 | | | | |

**(BR)** denotes Brakemotor


Send Quote Requests to info@automatedpt.com
Call +1(800)985-6929 To Order or Order Online At Nordgearmotors.com

# SK 41E + NEMA
# SK 41EF + NEMA

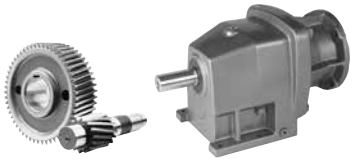

DRIVESYSTEMS



## SK 41E

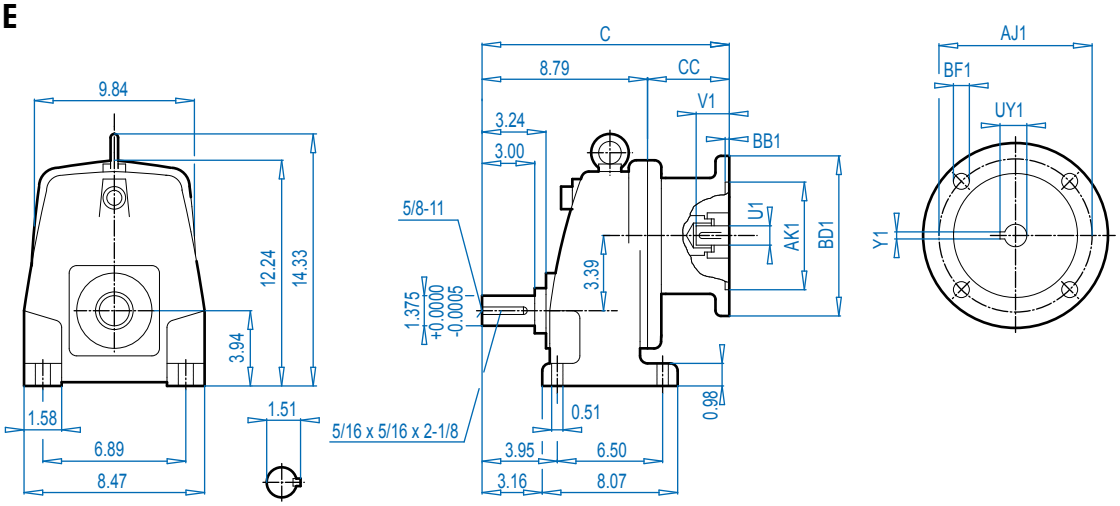


## SK 41EF

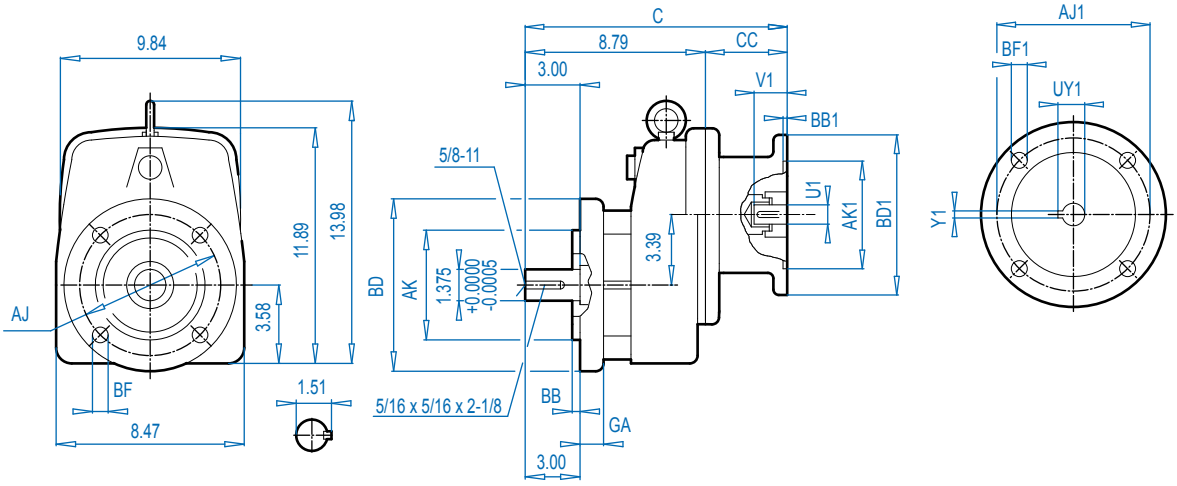


ALTERNATE SHAFTS SEE PAGE 239

### Mounting Flange

| BD (mm) | AJ | AK | BB | BF | GA |
|---|---|---|---|---|---|
| 7.87 (200) | 6.50 | 5.118 $^{+0.0005}_{-0.0004}$ | 0.14 | 0.43 | 0.55 |
| 9.84 (250) | 8.46 | 7.087 $^{+0.0005}_{-0.0004}$ | 0.16 | 0.55 | 0.63 |

### NEMA Dimensions

| Type | AJ1 | AK1 | BB1 | BD1 | BF1 | U1 | V1 | UY1 | Y1 | C | CC |
|---|---|---|---|---|---|---|---|---|---|---|---|
| **56C** | 5.88 | 4.500 | 0.18 | 6.54 | 0.43 | 0.625 | 2.06 | 0.71 | 0.188 | 13.10 | 4.33 |
| **140TC** | 5.88 | 4.500 | 0.18 | 6.54 | 0.43 | 0.875 | 2.12 | 0.96 | 0.188 | 13.10 | 4.33 |
| **180TC** | 7.25 | 8.500 | 0.23 | 9.17 | 0.59 | 1.125 | 2.62 | 1.24 | 0.250 | 16.68 | 7.91 |
| **210TC** | 7.25 | 8.500 | 0.39 | 9.17 | 0.59 | 1.375 | 3.12 | 1.52 | 0.312 | 16.68 | 7.91 |
| **250TC** | 7.25 | 8.500 | 0.23 | 9.17 | 0.59 | 1.625 | 3.75 | 1.80 | 0.375 | 16.68 | 7.91 |


Send Quote Requests to info@automatedpt.com
Call +1(800)985-6929 To Order or Order Online At Nordgearmotors.com

DRIVESYSTEMS

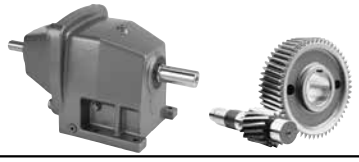

# SK 41E - W
# SK 41EF - W



## SK 41E

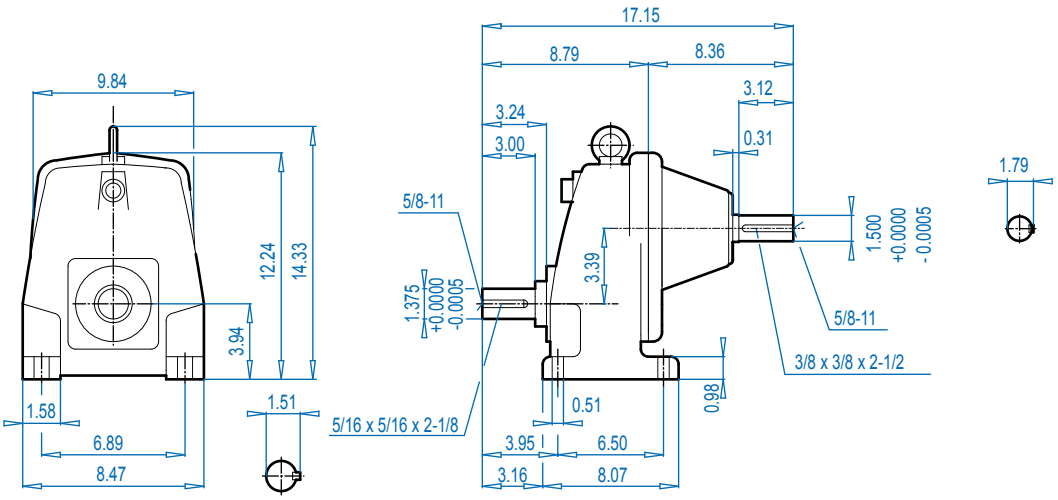


## SK 41EF

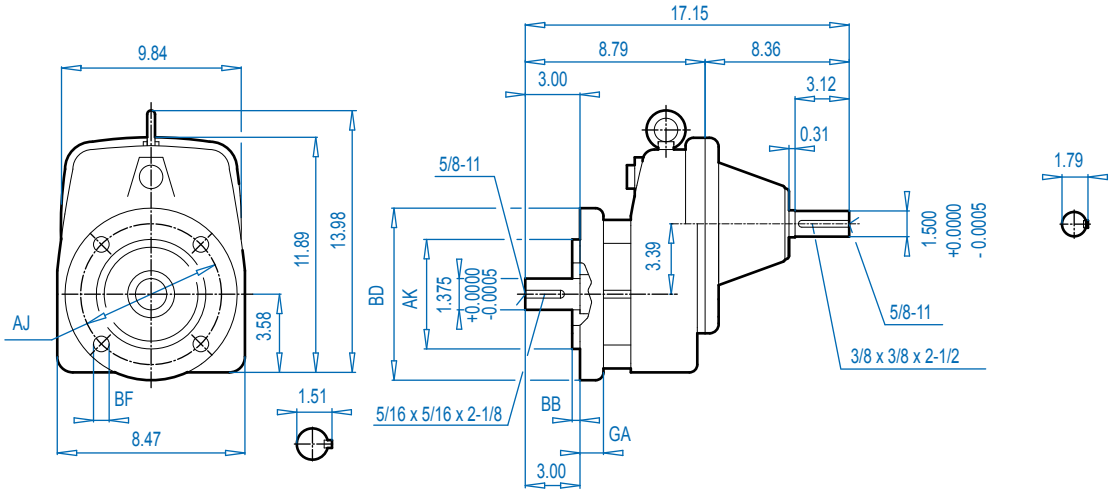


### Mounting Flange

| BD (mm) | AJ | AK | BB | BF | GA |
|---|---|---|---|---|---|
| 7.87 (200) | 6.50 | 5.118 $^{+0.0005}_{-0.0004}$ | 0.14 | 0.43 | 0.55 |
| 9.84 (250) | 8.46 | 7.087 $^{+0.0005}_{-0.0004}$ | 0.16 | 0.55 | 0.63 |

ALTERNATE SHAFTS SEE PAGE 239


Send Quote Requests to info@automatedpt.com
Call +1(800)985-6929 To Order or Order Online At Nordgearmotors.com

# SK 51E + Motor
# SK 51EF + Motor

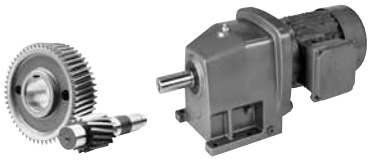

DRIVESYSTEMS



## SK 51E

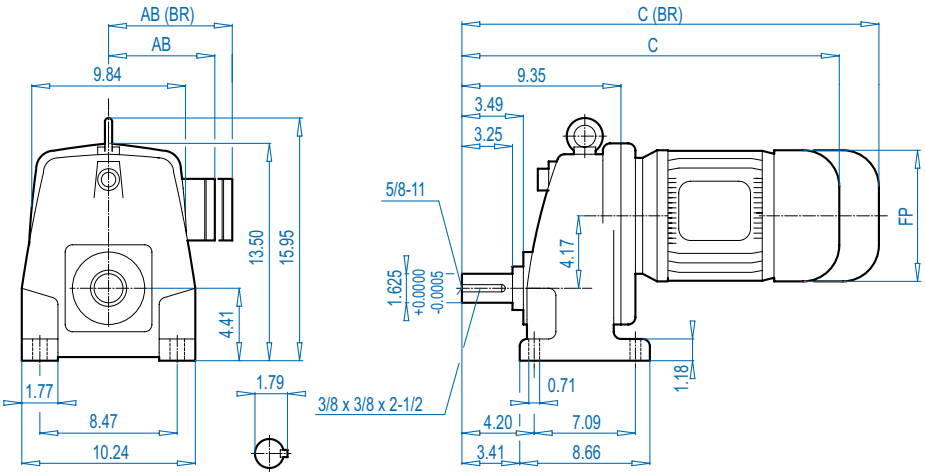


## SK 51EF

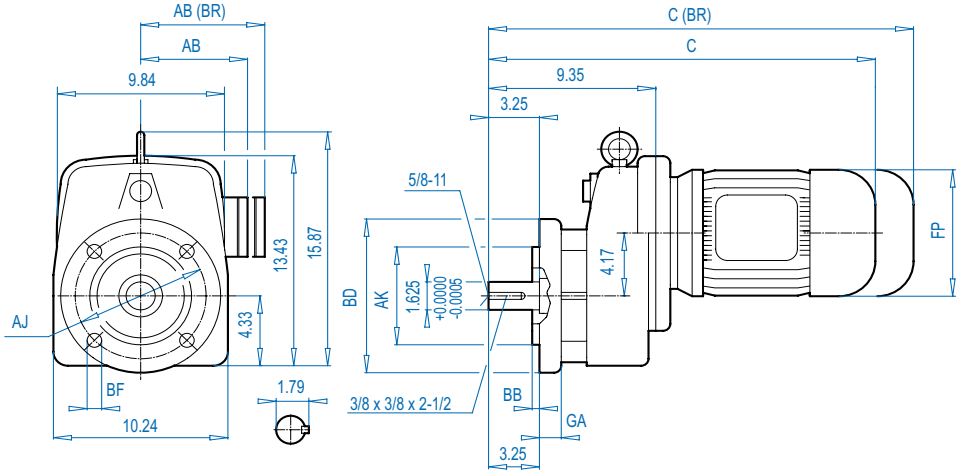


ALTERNATE SHAFTS SEE PAGE 239

### Mounting Flange

| BD (mm) | AJ | AK | BB | BF | GA |
|---|---|---|---|---|---|
| 9.84 (250) | 8.46 | 7.087 $^{+0.0005}_{-0.0004}$ | 0.16 | 0.55 | 0.63 |
| 11.81 (300) | 10.43 | 9.055 $^{+0.0006}_{-0.0005}$ | 0.16 | 0.55 | 0.79 |

### Motor Dimensions

| Standard efficiency | 160M/L | | 180MX/LX | | | | For Other Connection Possibilities please see ⇨🕮 236 |
|---|---|---|---|---|---|---|---|
| Energy efficiency | 160MH | 160LH | | 180MH/LH | | | |
| **AB** | 8.90 | 8.90 | 8.90 | 10.20 | | |  |
| **AB (BR)** | 8.90 | 8.90 | 8.90 | 10.20 | | | |
| **C** | 28.17 | 29.74 | 29.74 | 33.83 | | | |
| **C (BR)** | 37.74 | 36.47 | 36.47 | 37.97 | | | |
| **FP** | 12.60 | 12.60 | 12.60 | 14.09 | | | |

**(BR)** denotes Brakemotor


Send Quote Requests to info@automatedpt.com
Call +1(800)985-6929 To Order or Order Online At Nordgearmotors.com

DRIVESYSTEMS

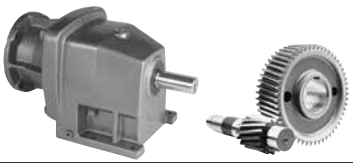

# SK 51E + NEMA
# SK 51EF + NEMA



## SK 51E

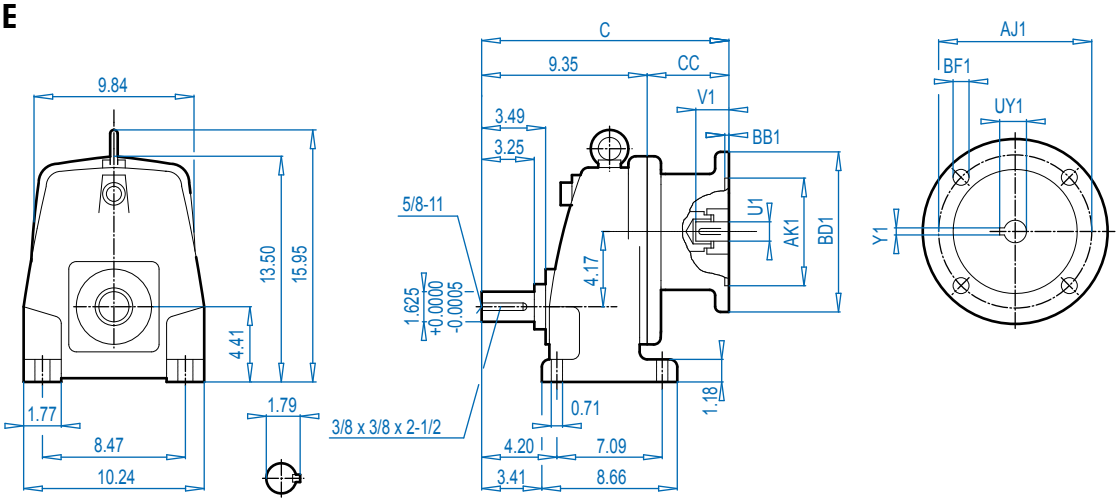


## SK 51EF

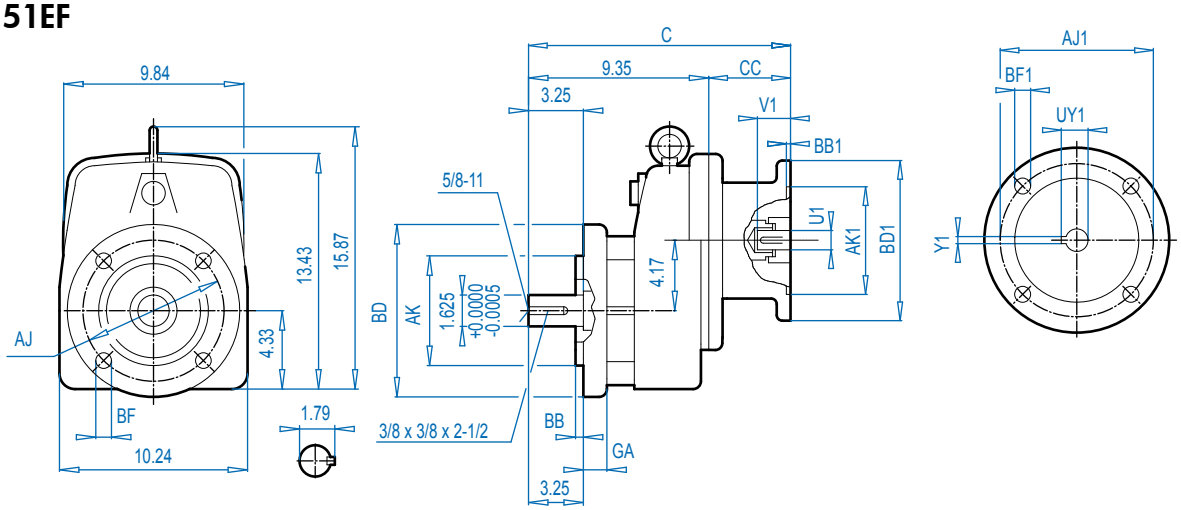


ALTERNATE SHAFTS SEE PAGE 239

### Mounting Flange

| BD (mm) | AJ | AK | BB | BF | GA |
|---|---|---|---|---|---|
| 9.84 (250) | 8.46 | 7.087 $^{+0.0005}_{-0.0004}$ | 0.16 | 0.55 | 0.63 |
| 11.81 (300) | 10.43 | 9.055 $^{+0.0006}_{-0.0005}$ | 0.16 | 0.55 | 0.79 |

### NEMA Dimensions

| Type | AJ1 | AK1 | BB1 | BD1 | BF1 | U1 | V1 | UY1 | Y1 | C | CC |
|---|---|---|---|---|---|---|---|---|---|---|---|
| **56C** | 5.88 | 4.500 | 0.18 | 6.54 | 0.43 | 0.625 | 2.06 | 0.71 | 0.188 | 13.66 | 4.33 |
| **140TC** | 5.88 | 4.500 | 0.18 | 6.54 | 0.43 | 0.875 | 2.12 | 0.96 | 0.188 | 14.96 | 5.63 |
| **180TC** | 7.25 | 8.500 | 0.23 | 9.17 | 0.59 | 1.125 | 2.62 | 1.24 | 0.250 | 17.25 | 7.91 |
| **210TC** | 7.25 | 8.500 | 0.39 | 9.17 | 0.59 | 1.375 | 3.12 | 1.52 | 0.312 | 17.25 | 7.91 |
| **250TC** | 7.25 | 8.500 | 0.23 | 9.17 | 0.59 | 1.625 | 3.75 | 1.80 | 0.375 | 17.25 | 7.91 |
| **280TC** | 9.00 | 10.500 | 0.23 | 13.78 | 0.59 | 1.875 | 4.38 | 2.03 | 0.500 | 17.66 | 8.54 |


Send Quote Requests to info@automatedpt.com
Call +1(800)985-6929 To Order or Order Online At Nordgearmotors.com

# SK 51E - W
# SK 51EF - W

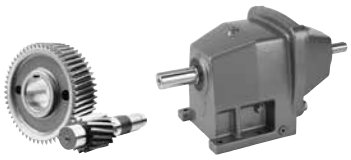

DRIVESYSTEMS



## SK 51E

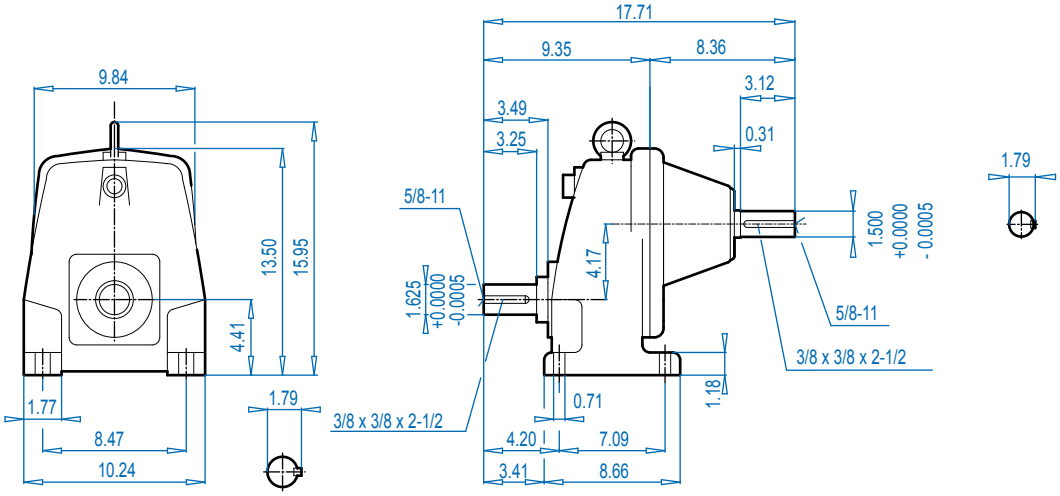


## SK 51EF

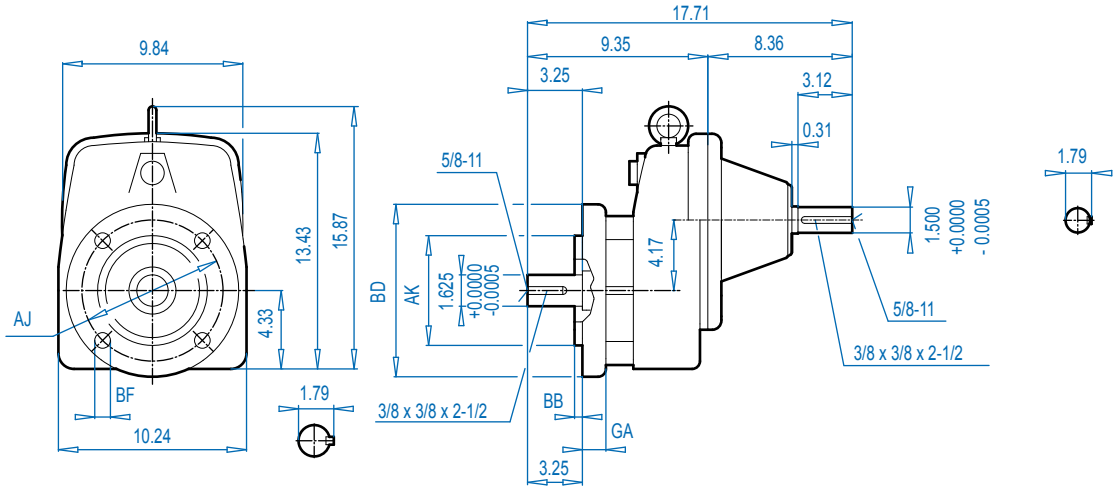


### Mounting Flange

| BD (mm) | AJ | AK | BB | BF | GA |
|---|---|---|---|---|---|
| 9.84 (250) | 8.46 | 7.087 $^{+0.0005}_{-0.0004}$ | 0.16 | 0.55 | 0.63 |
| 11.81 (300) | 10.43 | 9.055 $^{+0.0006}_{-0.0005}$ | 0.16 | 0.55 | 0.79 |

ALTERNATE SHAFTS SEE PAGE 239


Send Quote Requests to info@automatedpt.com
Call +1(800)985-6929 To Order or Order Online At Nordgearmotors.com

Send Quote Requests to info@automatedpt.com
Call +1(800)985-6929 To Order or Order Online At Nordgearmotors.com



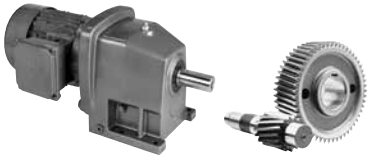

# SK 02 + Motor
# SK 02F + Motor



## SK 02

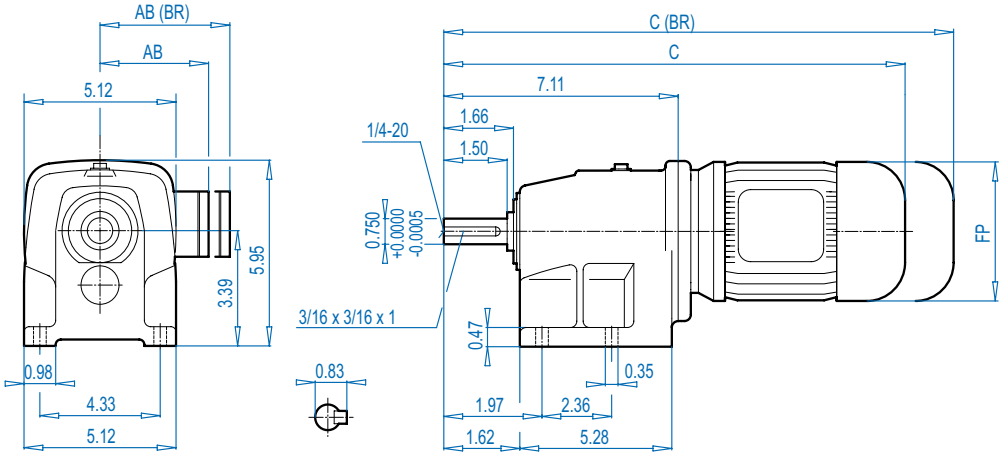


## SK 02F

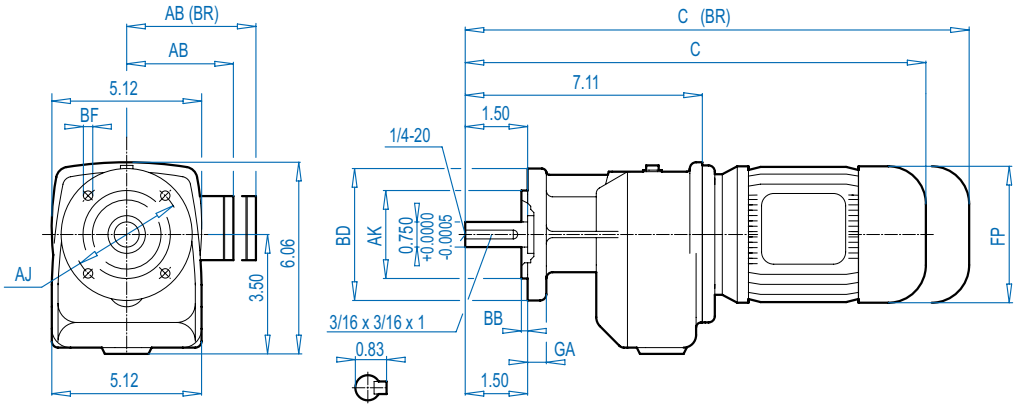


ALTERNATE SHAFTS SEE PAGE 239

### Mounting Flange

| BD (mm) | AJ | AK | BB | BF | GA |
|---|---|---|---|---|---|
| 4.72 (120) | 3.94 | 3.150 $^{+0.0005}_{-0.0003}$ | 0.12 | 0.28 | 0.39 |
| 5.51 (140) | 4.53 | 3.740 $^{+0.0005}_{-0.0004}$ | 0.12 | 0.35 | 0.39 |
| 6.30 (160) | 5.12 | 4.331 $^{+0.0005}_{-0.0004}$ | 0.14 | 0.35 | 0.39 |

### Motor Dimensions

| Standard efficiency | 63S/L | 71S/L | 80S/L | 90S/L | | | For Other Connection Possibilities please see ⇨🕮 236 |
|---|---|---|---|---|---|---|---|
| Energy efficiency | | | 80LH | 90SH/LH | | | |
| AB | 4.53 | 4.88 | 5.59 | 5.79 | | |  |
| AB (BR) | 4.84 | 5.24 | 5.63 | 5.83 | | | |
| C | 14.77 | 16.34 | 17.33 | 18.94 | | | |
| C (BR) | 16.97 | 18.63 | 19.85 | 21.90 | | | |
| FP | 4.84 | 5.43 | 6.14 | 6.92 | | | |

**(BR)** denotes Brakemotor


Send Quote Requests to info@automatedpt.com
Call +1(800)985-6929 To Order or Order Online At Nordgearmotors.com

# SK 02 + NEMA
# SK 02F + NEMA

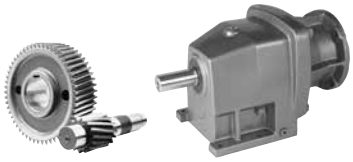

DRIVESYSTEMS



## SK 02 + NEMA

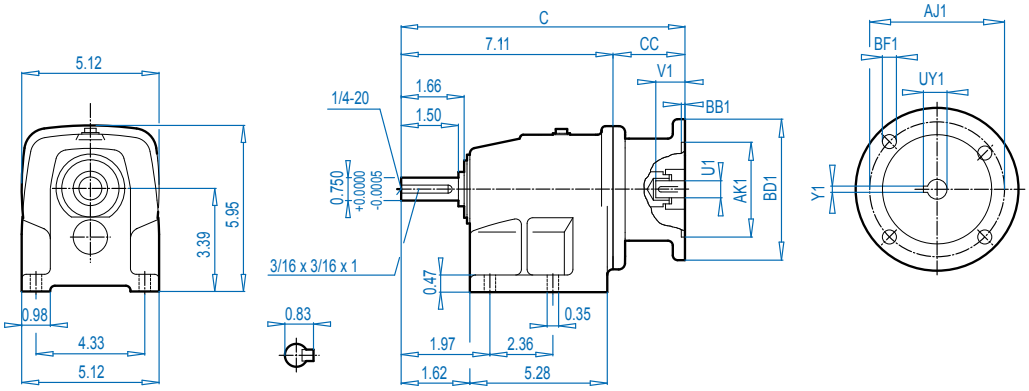


## SK 02F + NEMA

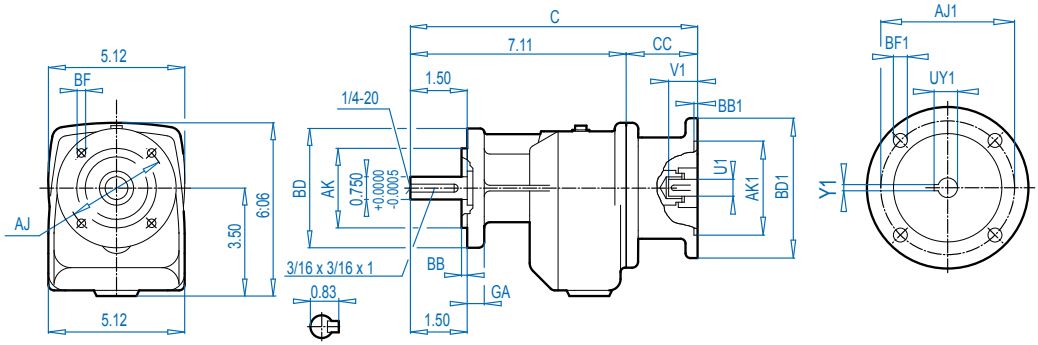


ALTERNATE SHAFTS SEE PAGE 239

### Mounting Flange

| BD (mm) | AJ | AK | BB | BF | GA |
|---|---|---|---|---|---|
| 4.72 (120) | 3.94 | 3.150 $^{+0.0005}_{-0.0003}$ | 0.12 | 0.28 | 0.39 |
| 5.51 (140) | 4.53 | 3.740 $^{+0.0005}_{-0.0004}$ | 0.12 | 0.35 | 0.39 |
| 6.30 (160) | 5.12 | 4.331 $^{+0.0005}_{-0.0004}$ | 0.14 | 0.35 | 0.39 |

### NEMA Dimensions

| Type | AJ1 | AK1 | BB1 | BD1 | BF1 | U1 | V1 | UY1 | Y1 | C | CC |
|---|---|---|---|---|---|---|---|---|---|---|---|
| **56C** | 5.88 | 4.500 | 0.18 | 6.54 | 0.43 | 0.625 | 2.06 | 0.71 | 0.188 | 11.56 | 4.45 |
| **140TC** | 5.88 | 4.500 | 0.18 | 6.54 | 0.43 | 0.875 | 2.12 | 0.96 | 0.188 | 11.56 | 4.45 |


Send Quote Requests to info@automatedpt.com
Call +1(800)985-6929 To Order or Order Online At Nordgearmotors.com

DRIVESYSTEMS

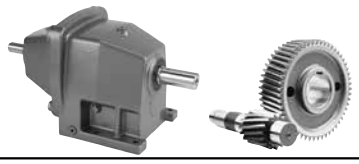

# SK 02 - W
# SK 02F - W



## SK 02 + W

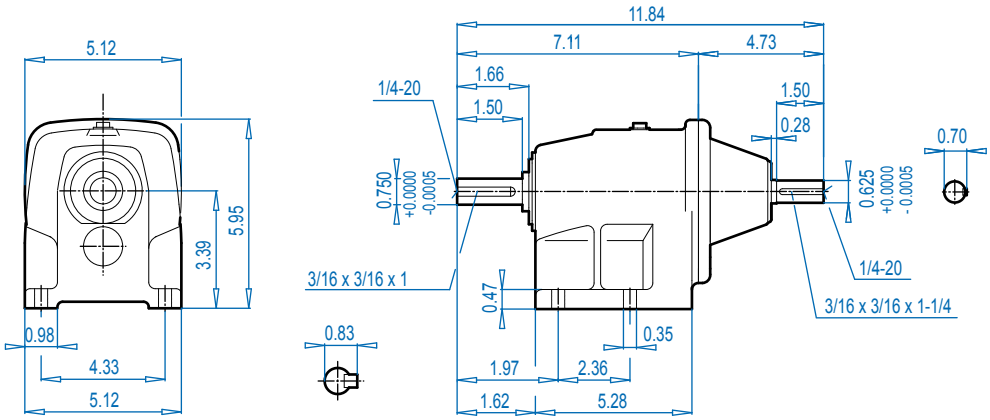


## SK 02F + W

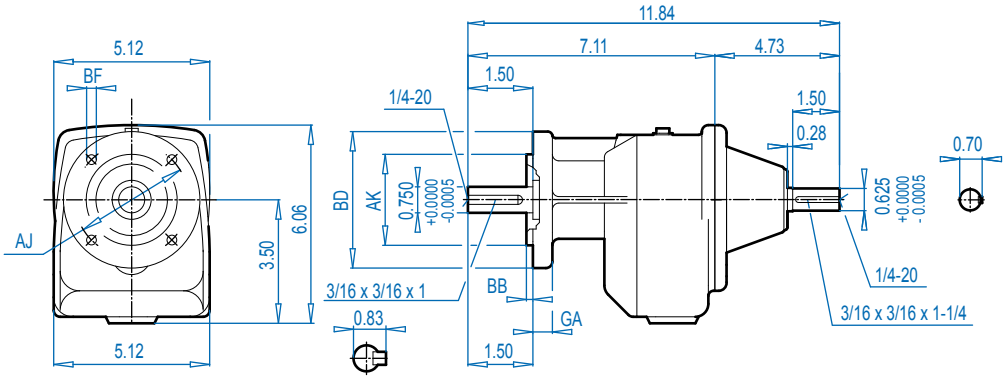


### Mounting Flange

| BD (mm) | AJ | AK | BB | BF | GA |
|---|---|---|---|---|---|
| 4.72 (120) | 3.94 | 3.150 $^{+0.0005}_{-0.0003}$ | 0.12 | 0.28 | 0.39 |
| 5.51 (140) | 4.53 | 3.740 $^{+0.0005}_{-0.0004}$ | 0.12 | 0.35 | 0.39 |
| 6.30 (160) | 5.12 | 4.331 $^{+0.0005}_{-0.0004}$ | 0.14 | 0.35 | 0.39 |

ALTERNATE SHAFTS SEE PAGE 239


Send Quote Requests to info@automatedpt.com
Call +1(800)985-6929 To Order or Order Online At Nordgearmotors.com

# SK 03 + Motor
# SK 03F + Motor

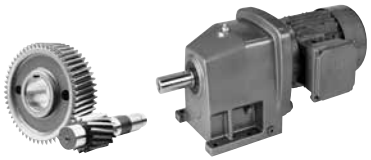

DRIVESYSTEMS



## SK 03

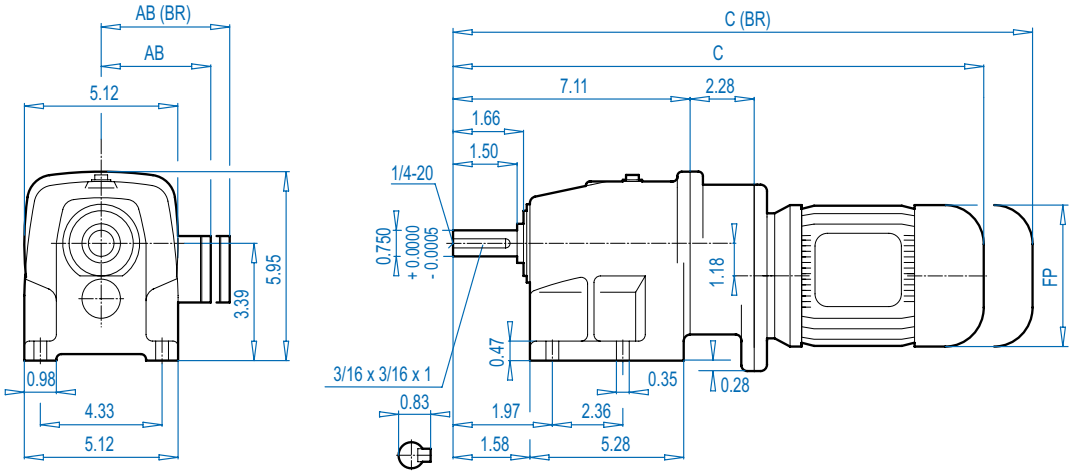


## SK 03F

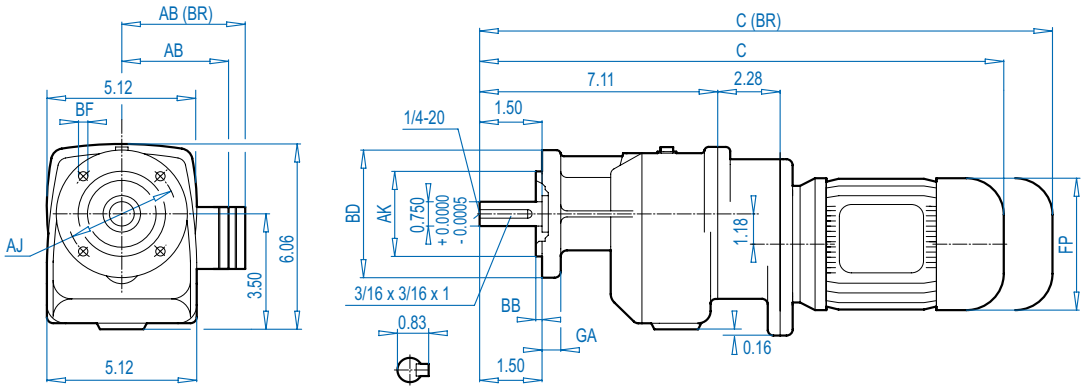


ALTERNATE SHAFTS SEE PAGE 239

### Mounting Flange

| BD (mm) | AJ | AK | BB | BF | GA |
|---|---|---|---|---|---|
| 4.72 (120) | 3.94 | 3.150 $^{+0.0005}_{-0.0003}$ | 0.12 | 0.28 | 0.39 |
| 5.51 (140) | 4.53 | 3.740 $^{+0.0005}_{-0.0004}$ | 0.12 | 0.35 | 0.39 |
| 6.30 (160) | 5.12 | 4.331 $^{+0.0005}_{-0.0004}$ | 0.14 | 0.35 | 0.39 |

### Motor Dimensions

| Standard efficiency | 63S/L | 71S/L | | | | | For Other Connection Possibilities please see ⇨🕮 236 |
|---|---|---|---|---|---|---|---|
| Energy efficiency | | | | | | | |
| AB | 4.53 | 4.88 | | | | |  |
| AB (BR) | 4.84 | 5.24 | | | | | |
| C | 16.97 | 18.55 | | | | | |
| C (BR) | 19.18 | 20.83 | | | | | |
| FP | 4.84 | 5.43 | | | | | |

**(BR)** denotes Brakemotor


Send Quote Requests to info@automatedpt.com
Call +1(800)985-6929 To Order or Order Online At Nordgearmotors.com

DRIVESYSTEMS

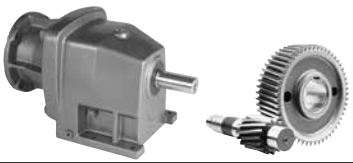

# SK 03 + NEMA
# SK 03F + NEMA



## SK 03

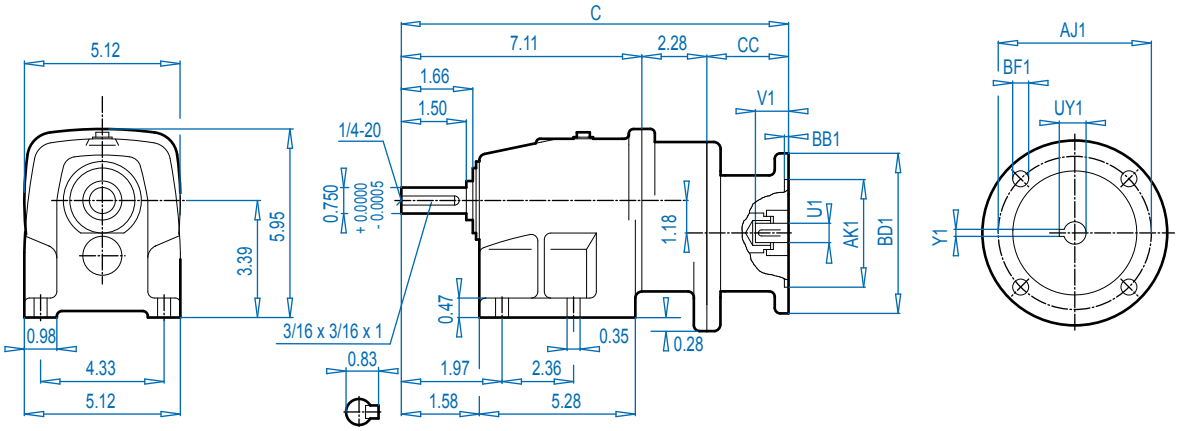


## SK 03F

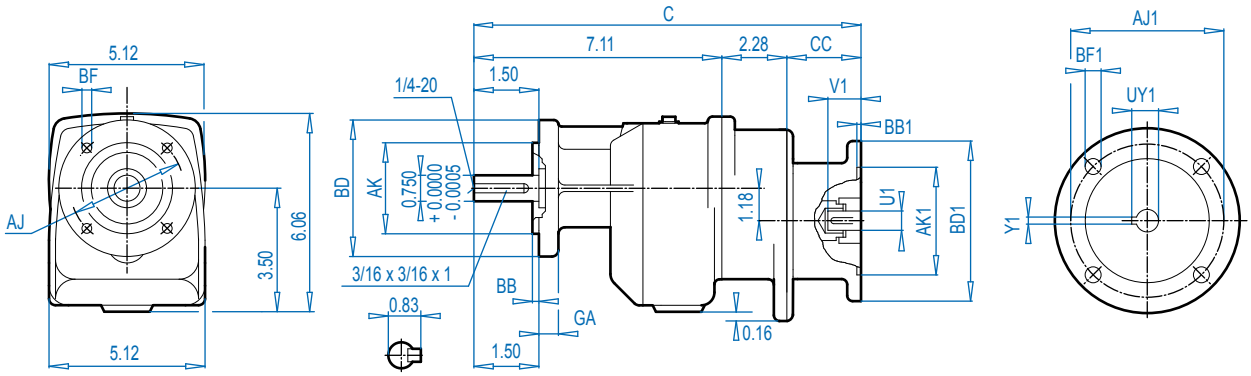


ALTERNATE SHAFTS SEE PAGE 239

### Mounting Flange

| BD (mm) | AJ | AK | BB | BF | GA |
|---|---|---|---|---|---|
| 4.72 (120) | 3.94 | 3.150 $^{+0.0005}_{-0.0003}$ | 0.12 | 0.28 | 0.39 |
| 5.51 (140) | 4.53 | 3.740 $^{+0.0005}_{-0.0004}$ | 0.12 | 0.35 | 0.39 |
| 6.30 (160) | 5.12 | 4.331 $^{+0.0005}_{-0.0004}$ | 0.14 | 0.35 | 0.39 |

### NEMA Dimensions

| Type | AJ1 | AK1 | BB1 | BD1 | BF1 | U1 | V1 | UY1 | Y1 | C | CC |
|---|---|---|---|---|---|---|---|---|---|---|---|
| **56C** | 5.88 | 4.500 | 0.18 | 6.54 | 0.43 | 0.625 | 2.06 | 0.71 | 0.188 | 13.74 | 4.45 |
| **140TC** | 5.88 | 4.500 | 0.18 | 6.54 | 0.43 | 0.875 | 2.12 | 0.96 | 0.188 | 13.74 | 4.45 |


Send Quote Requests to info@automatedpt.com
Call +1(800)985-6929 To Order or Order Online At Nordgearmotors.com

# SK 03 - W
# SK 03F - W

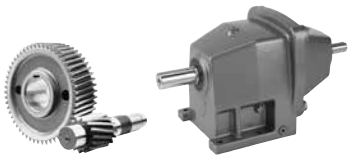

DRIVESYSTEMS



## SK 03

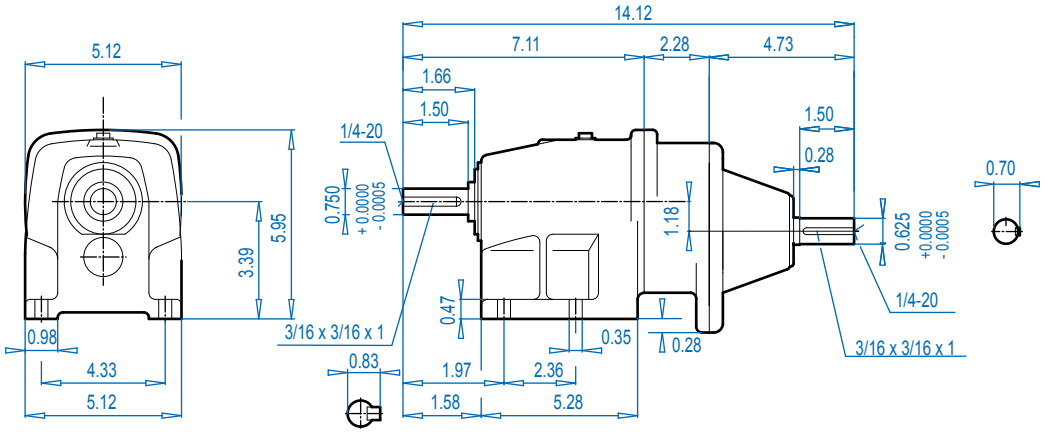


## SK 03F

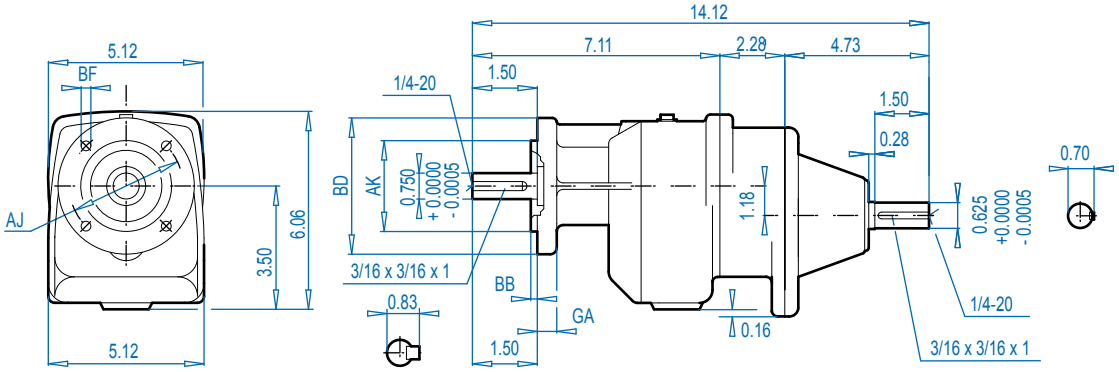


### Mounting Flange

| BD (mm) | AJ | AK | BB | BF | GA |
|---|---|---|---|---|---|
| 4.72 (120) | 3.94 | 3.150 $^{+0.0005}_{-0.0003}$ | 0.12 | 0.28 | 0.39 |
| 5.51 (140) | 4.53 | 3.740 $^{+0.0005}_{-0.0004}$ | 0.12 | 0.35 | 0.39 |
| 6.30 (160) | 5.12 | 4.331 $^{+0.0005}_{-0.0004}$ | 0.14 | 0.35 | 0.39 |

ALTERNATE SHAFTS SEE PAGE 239


Send Quote Requests to info@automatedpt.com
Call +1(800)985-6929 To Order or Order Online At Nordgearmotors.com

DRIVESYSTEMS

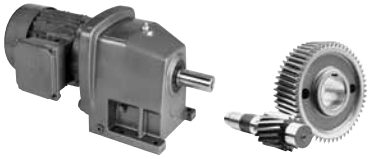

# SK 12 + Motor
# SK 12F + Motor



## SK 12

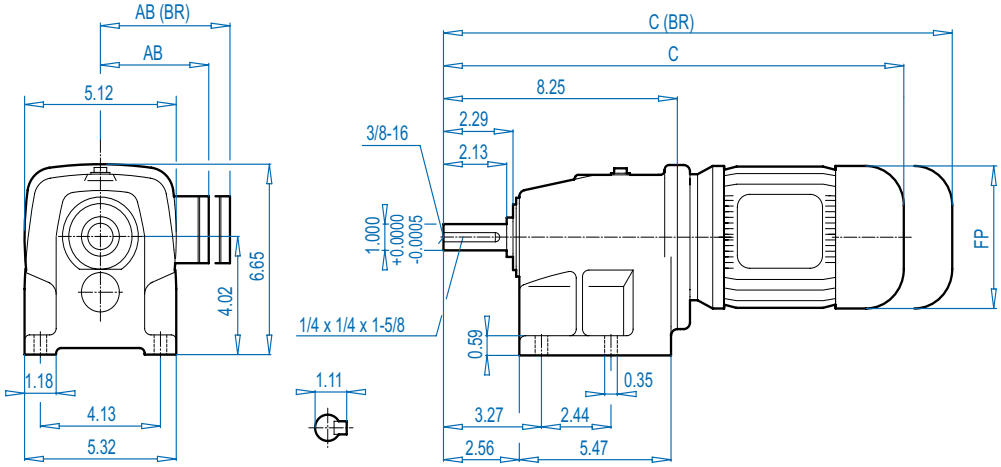


## SK 12F

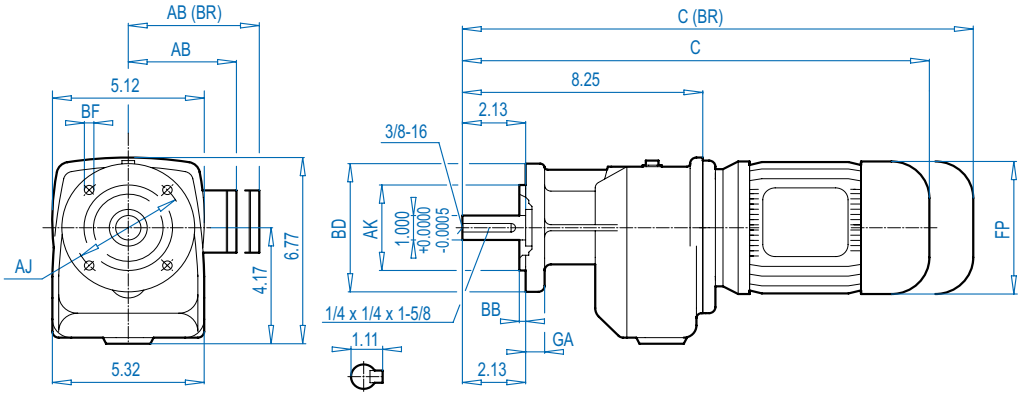


### Mounting Flange

| BD (mm) | AJ | AK | BB | BF | GA |
|---|---|---|---|---|---|
| 4.72 (120) | 3.94 | 3.150 $^{+0.0005}_{-0.0003}$ | 0.12 | 0.28 | 0.39 |
| 5.51 (140) | 4.53 | 3.740 $^{+0.0005}_{-0.0004}$ | 0.12 | 0.35 | 0.39 |
| 6.30 (160) | 5.12 | 4.331 $^{+0.0005}_{-0.0004}$ | 0.14 | 0.35 | 0.39 |

### Motor Dimensions

| Standard efficiency | 63S/L | 71S/L | 80S/L | 90S/L | 100L | 112M | | For Other Connection Possibilities please see ⇨🕮 236 |
|---|---|---|---|---|---|---|---|---|
| Energy efficiency | | | 80LH | 90SH/LH | 100LH | | 112MH | |
| **AB** | 4.53 | 4.88 | 5.59 | 5.79 | 6.65 | 7.05 | 7.05 | |
| **AB (BR)** | 4.84 | 5.24 | 5.63 | 5.83 | 6.26 | 6.69 | 6.69 | |
| **C** | 15.90 | 17.48 | 18.46 | 20.08 | 21.26 | 22.16 | 23.13 | |
| **C (BR)** | 18.11 | 19.76 | 20.98 | 23.03 | 24.84 | 25.82 | 26.79 | |
| **FP** | 4.84 | 5.43 | 6.14 | 6.92 | 7.63 | 8.58 | 8.58 | |



**(BR)** denotes Brakemotor

ALTERNATE SHAFTS SEE PAGE 239


Send Quote Requests to info@automatedpt.com
Call +1(800)985-6929 To Order or Order Online At Nordgearmotors.com

Send Quote Requests to info@automatedpt.com
Call +1(800)985-6929 To Order or Order Online At Nordgearmotors.com

# SK 12 + NEMA
# SK 12F + NEMA

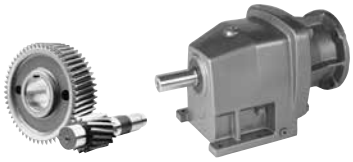



## SK 12

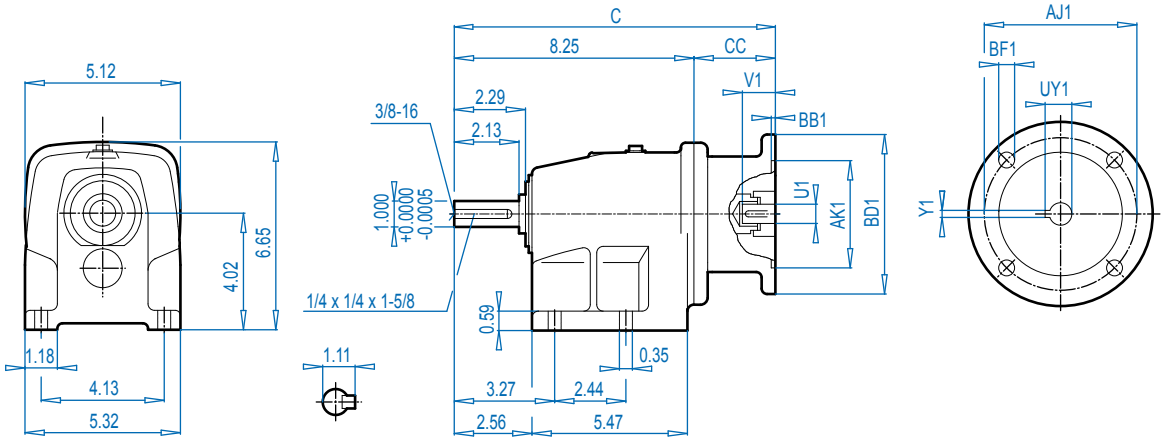


## SK 12F

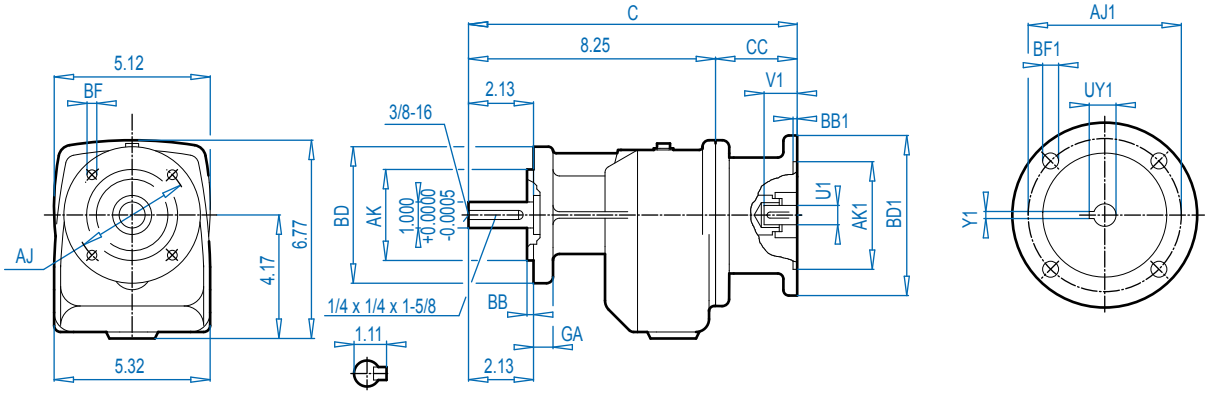


ALTERNATE SHAFTS SEE PAGE 239

### Mounting Flange

| BD (mm) | AJ | AK | BB | BF | GA |
|---|---|---|---|---|---|
| 4.72 (120) | 3.94 | 3.150 $^{+0.0005}_{-0.0003}$ | 0.12 | 0.28 | 0.39 |
| 5.51 (140) | 4.53 | 3.740 $^{+0.0005}_{-0.0004}$ | 0.12 | 0.35 | 0.39 |
| 6.30 (160) | 5.12 | 4.331 $^{+0.0005}_{-0.0004}$ | 0.14 | 0.35 | 0.39 |

### NEMA Dimensions

| Type | AJ1 | AK1 | BB1 | BD1 | BF1 | U1 | V1 | UY1 | Y1 | C | CC |
|---|---|---|---|---|---|---|---|---|---|---|---|
| **56C** | 5.88 | 4.500 | 0.18 | 6.54 | 0.43 | 0.625 | 2.06 | 0.71 | 0.188 | 12.70 | 4.45 |
| **140TC** | 5.88 | 4.500 | 0.18 | 6.54 | 0.43 | 0.875 | 2.12 | 0.96 | 0.188 | 12.70 | 4.45 |
| **180TC** | 7.25 | 8.500 | 0.23 | 9.17 | 0.59 | 1.125 | 2.62 | 1.24 | 0.250 | 13.90 | 5.65 |


Send Quote Requests to info@automatedpt.com
Call +1(800)985-6929 To Order or Order Online At Nordgearmotors.com

DRIVESYSTEMS

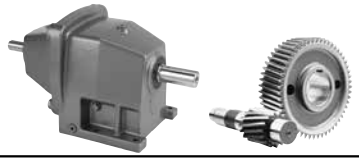

# SK 12 - W
# SK 12F - W



## SK 12

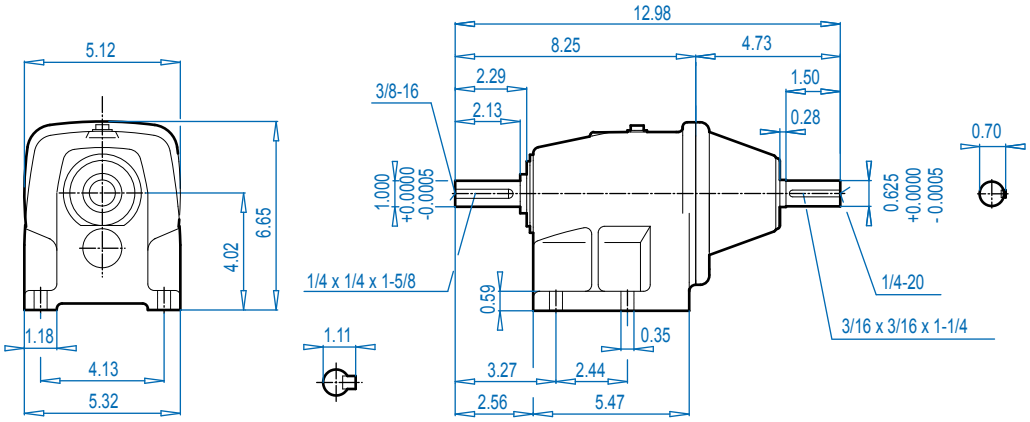


## SK 12F

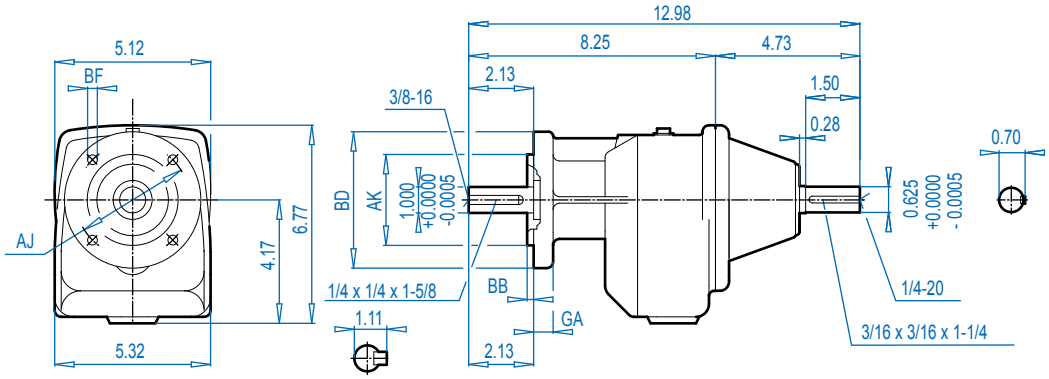


ALTERNATE SHAFTS SEE PAGE 239

### Mounting Flange

| BD (mm) | AJ | AK | BB | BF | GA |
|---|---|---|---|---|---|
| 4.72 (120) | 3.94 | 3.150 $^{+0.0005}_{-0.0003}$ | 0.12 | 0.28 | 0.39 |
| 5.51 (140) | 4.53 | 3.740 $^{+0.0005}_{-0.0004}$ | 0.12 | 0.35 | 0.39 |
| 6.30 (160) | 5.12 | 4.331 $^{+0.0005}_{-0.0004}$ | 0.14 | 0.35 | 0.39 |


Send Quote Requests to info@automatedpt.com
Call +1(800)985-6929 To Order or Order Online At Nordgearmotors.com

# SK 13 + Motor
# SK 13F + Motor

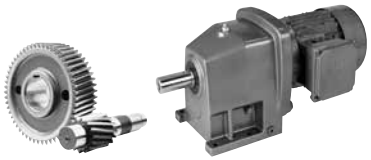

DRIVESYSTEMS



## SK 13

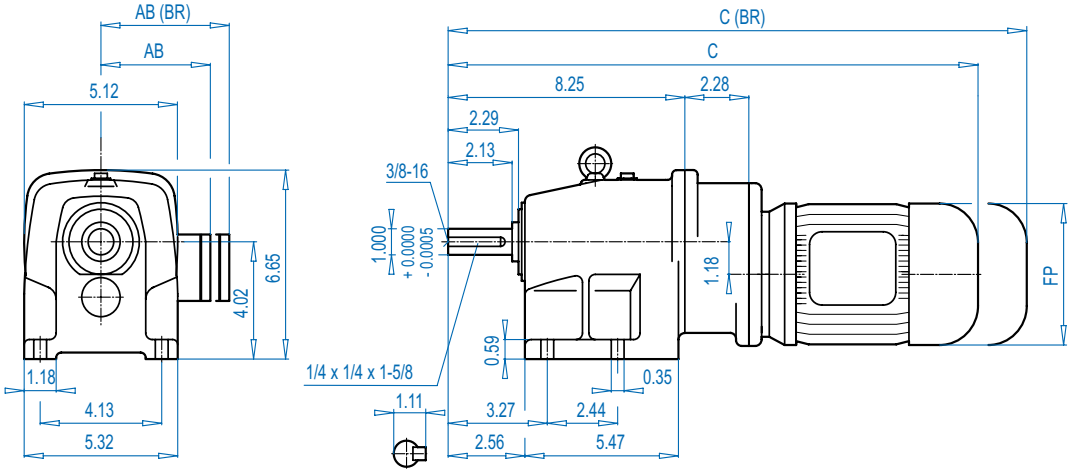


## SK 13F

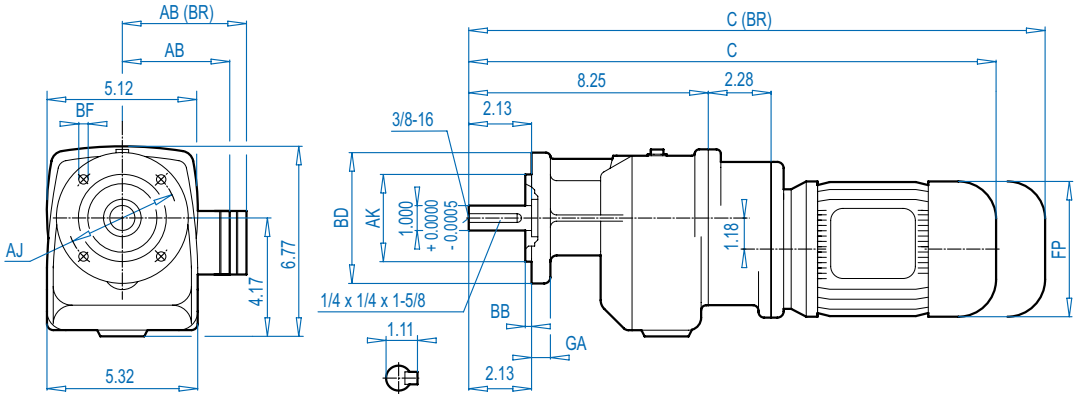


ALTERNATE SHAFTS SEE PAGE 239

### Mounting Flange

| BD (mm) | AJ | AK | BB | BF | GA |
|---|---|---|---|---|---|
| 4.72 (120) | 3.94 | 3.150 $^{+0.0005}_{-0.0003}$ | 0.12 | 0.28 | 0.39 |
| 5.51 (140) | 4.53 | 3.740 $^{+0.0005}_{-0.0004}$ | 0.12 | 0.35 | 0.39 |
| 6.30 (160) | 5.12 | 4.331 $^{+0.0005}_{-0.0004}$ | 0.14 | 0.35 | 0.39 |

### Motor Dimensions

| Standard efficiency | 63S/L | 71S/L | | | | | For Other Connection Possibilities please see ⇨📖 236 |
|---|---|---|---|---|---|---|---|
| Energy efficiency | | | | | | | |
| AB | 4.53 | 4.88 | | | | |  |
| AB (BR) | 4.84 | 5.24 | | | | | |
| C | 18.19 | 19.76 | | | | | |
| C (BR) | 20.39 | 22.04 | | | | | |
| FP | 4.84 | 5.43 | | | | | |

**(BR)** denotes Brakemotor


Send Quote Requests to info@automatedpt.com
Call +1(800)985-6929 To Order or Order Online At Nordgearmotors.com

DRIVESYSTEMS

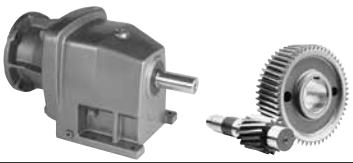

# SK 13 + NEMA
# SK 13F + NEMA



## SK 13

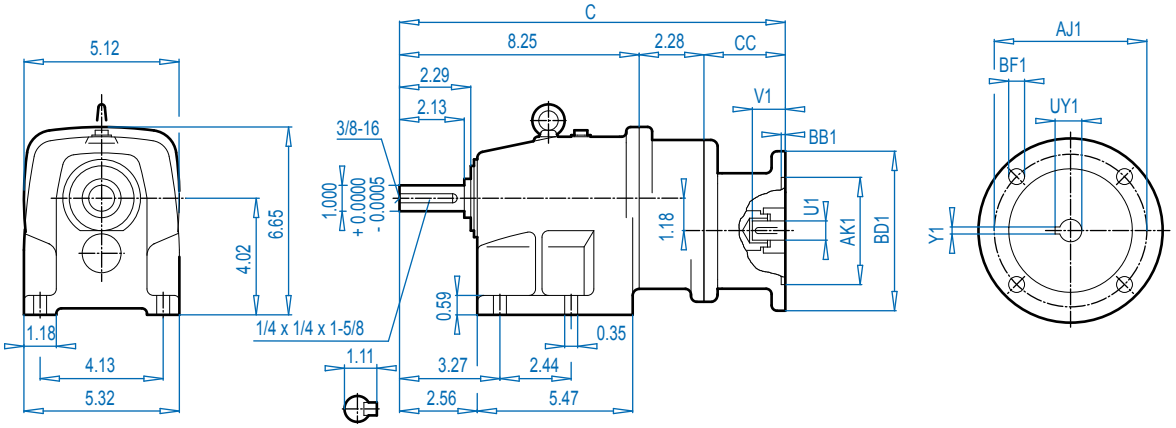


## SK 13F

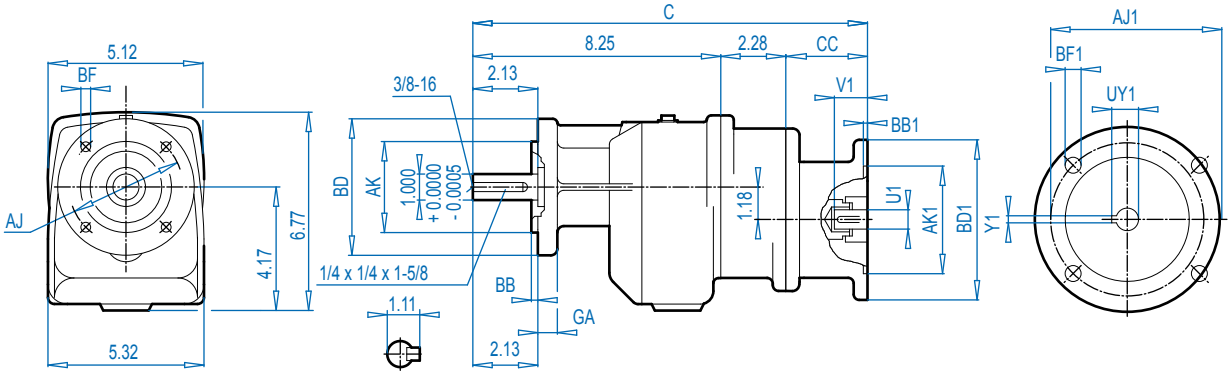


ALTERNATE SHAFTS SEE PAGE 239

### Mounting Flange

| BD (mm) | AJ | AK | BB | BF | GA |
|---|---|---|---|---|---|
| 4.72 (120) | 3.94 | 3.150 $^{+0.0005}_{-0.0003}$ | 0.12 | 0.28 | 0.39 |
| 5.51 (140) | 4.53 | 3.740 $^{+0.0005}_{-0.0004}$ | 0.12 | 0.35 | 0.39 |
| 6.30 (160) | 5.12 | 4.331 $^{+0.0005}_{-0.0004}$ | 0.14 | 0.35 | 0.39 |

### NEMA Dimensions

| Type | AJ1 | AK1 | BB1 | BD1 | BF1 | U1 | V1 | UY1 | Y1 | C | CC |
|---|---|---|---|---|---|---|---|---|---|---|---|
| **56C** | 5.88 | 4.500 | 0.18 | 6.54 | 0.43 | 0.625 | 2.06 | 0.71 | 0.188 | 14.98 | 4.45 |


Send Quote Requests to info@automatedpt.com
Call +1(800)985-6929 To Order or Order Online At Nordgearmotors.com

# SK 13 - W
# SK 13F - W

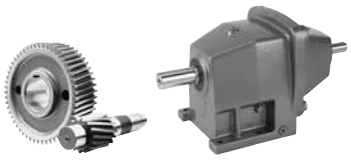

DRIVESYSTEMS



## SK 13

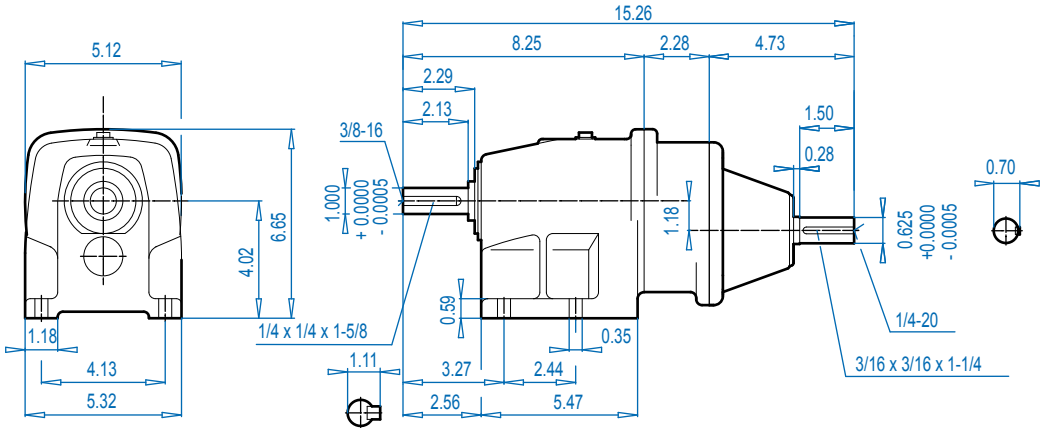


## SK 13F

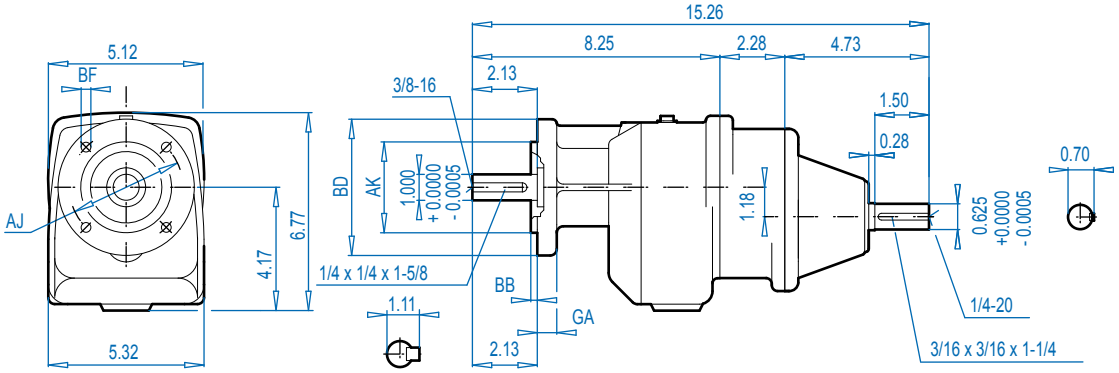


### Mounting Flange

| BD (mm) | AJ | AK | BB | BF | GA |
|---|---|---|---|---|---|
| 4.72 (120) | 3.94 | 3.150 $^{+0.0005}_{-0.0003}$ | 0.12 | 0.28 | 0.39 |
| 5.51 (140) | 4.53 | 3.740 $^{+0.0005}_{-0.0004}$ | 0.12 | 0.35 | 0.39 |
| 6.30 (160) | 5.12 | 4.331 $^{+0.0005}_{-0.0004}$ | 0.14 | 0.35 | 0.39 |

ALTERNATE SHAFTS SEE PAGE 239


Send Quote Requests to info@automatedpt.com
Call +1(800)985-6929 To Order or Order Online At Nordgearmotors.com

Send Quote Requests to info@automatedpt.com
Call +1(800)985-6929 To Order or Order Online At Nordgearmotors.com



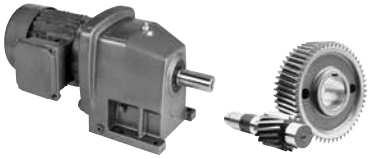

# SK 22 + Motor
# SK 22F + Motor



## SK 22

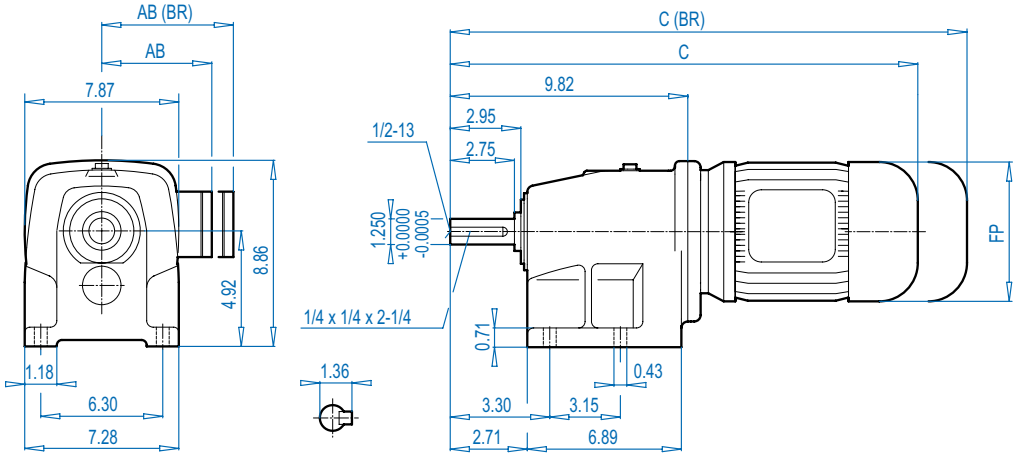


## SK 22F

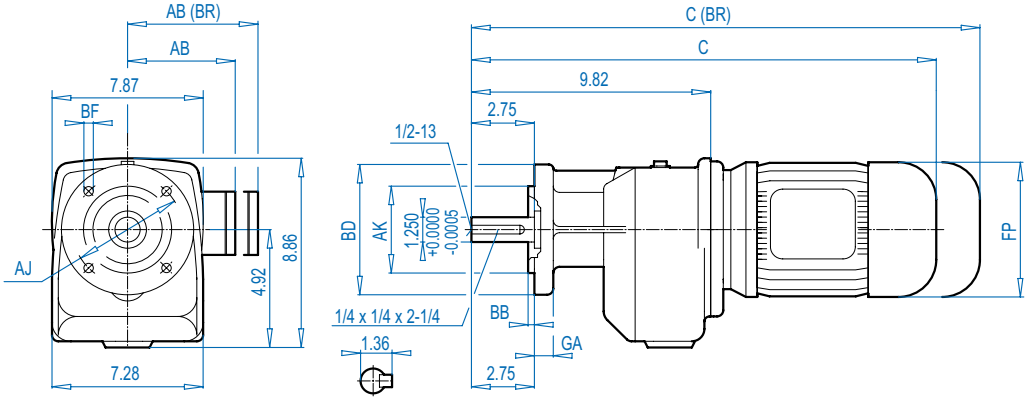


ALTERNATE SHAFTS SEE PAGE 239

### Mounting Flange

| BD (mm) | AJ | AK | BB | BF | GA |
|---|---|---|---|---|---|
| 6.30 (160) | 5.12 | 4.331 $^{+0.0005}_{-0.0004}$ | 0.14 | 0.35 | 0.39 |
| 7.87 (200) | 6.50 | 5.118 $^{+0.0005}_{-0.0004}$ | 0.14 | 0.43 | 0.47 |

### Motor Dimensions

| Standard efficiency | 71S/L | 80S/L | 90S/L | 100L | 112M | | For Other Connection Possibilities please see ⇨📖 236 |
|---|---|---|---|---|---|---|---|
| Energy efficiency | | 80LH | 90SH/LH | 100LH | | 112MH | |
| **AB** | 4.88 | 5.59 | 5.79 | 6.65 | 7.05 | **7.05** | |
| **AB (BR)** | 5.24 | 5.63 | 5.83 | 6.26 | 6.69 | **6.69** | |
| **C** | 18.86 | 19.84 | 21.45 | 22.64 | 23.54 | **24.51** | |
| **C (BR)** | 21.14 | 22.36 | 24.41 | 26.22 | 27.20 | **28.17** | |
| **FP** | 5.43 | 6.14 | 6.92 | 7.63 | 8.58 | **8.58** | |

**(BR)** denotes Brakemotor


Send Quote Requests to info@automatedpt.com
Call +1(800)985-6929 To Order or Order Online At Nordgearmotors.com

# SK 22 + NEMA
# SK 22F + NEMA

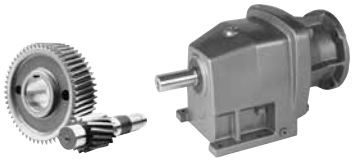

DRIVESYSTEMS



## SK 22

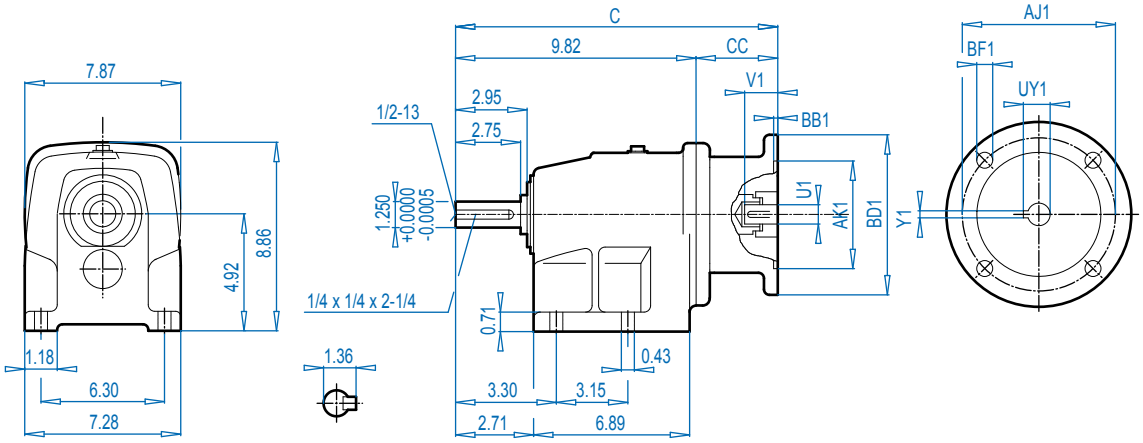


## SK 22F

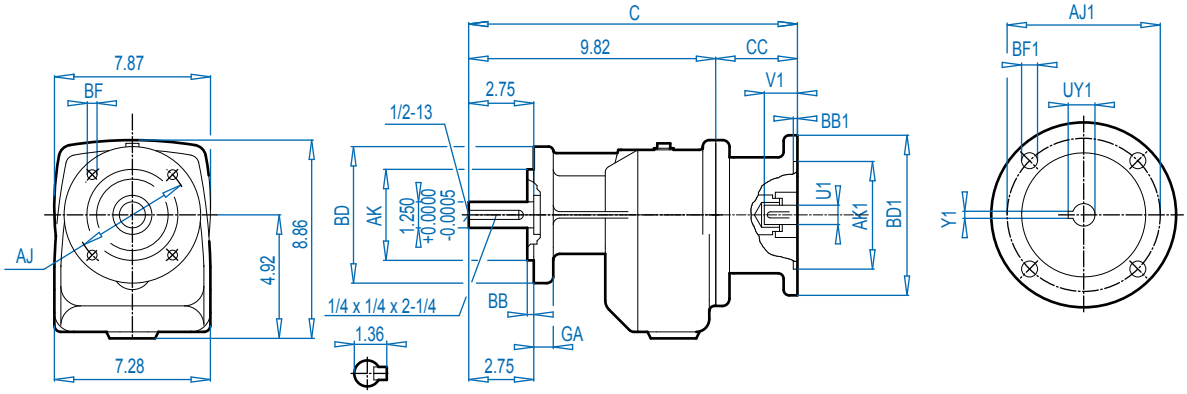


ALTERNATE SHAFTS SEE PAGE 239

### Mounting Flange

| BD (mm) | AJ | AK | BB | BF | GA |
|---|---|---|---|---|---|
| 6.30 (160) | 5.12 | 4.331 $^{+0.0005}_{-0.0004}$ | 0.14 | 0.35 | 0.39 |
| 7.87 (200) | 6.50 | 5.118 $^{+0.0005}_{-0.0004}$ | 0.14 | 0.43 | 0.47 |

### NEMA Dimensions

| Type | AJ1 | AK1 | BB1 | BD1 | BF1 | U1 | V1 | UY1 | Y1 | C | CC |
|---|---|---|---|---|---|---|---|---|---|---|---|
| **56C** | 5.88 | 4.500 | 0.18 | 6.54 | 0.43 | 0.625 | 2.06 | 0.71 | 0.188 | 14.42 | 4.61 |
| **140TC** | 5.88 | 4.500 | 0.18 | 6.54 | 0.43 | 0.875 | 2.12 | 0.96 | 0.188 | 14.42 | 4.61 |
| **180TC** | 7.25 | 8.500 | 0.23 | 9.17 | 0.59 | 1.125 | 2.62 | 1.24 | 0.250 | 15.33 | 5.51 |


Send Quote Requests to info@automatedpt.com
Call +1(800)985-6929 To Order or Order Online At Nordgearmotors.com

DRIVESYSTEMS

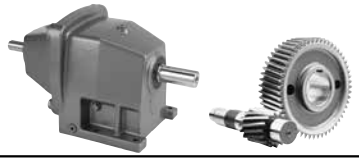

# SK 22 - W
# SK 22F - W



## SK 22

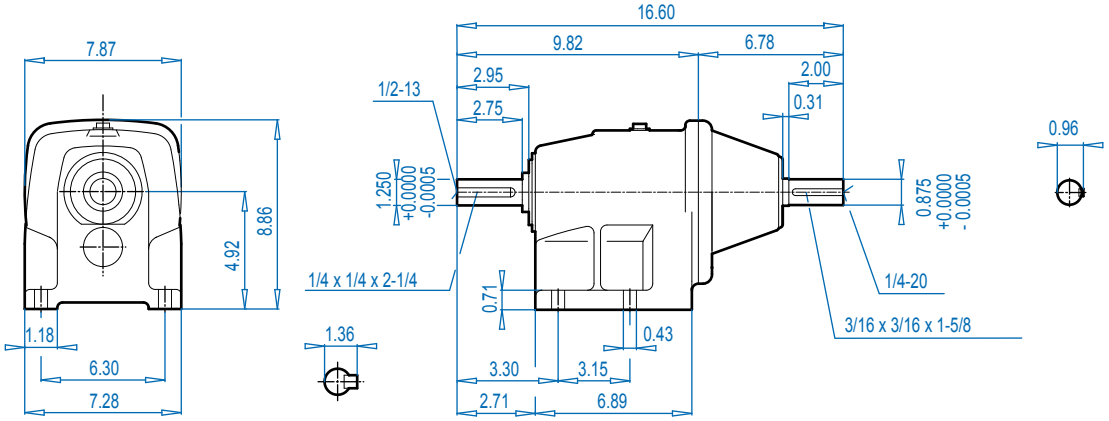


## SK 22F

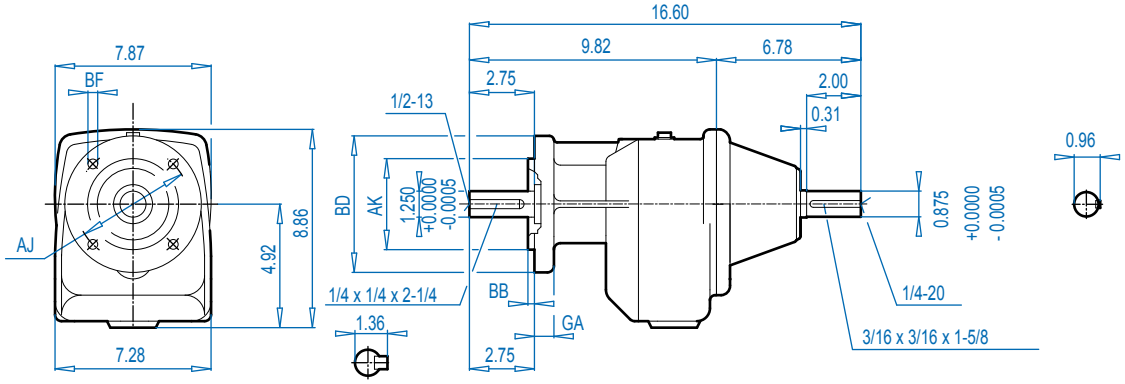


### Mounting Flange

| BD (mm) | AJ | AK | BB | BF | GA |
|---|---|---|---|---|---|
| 6.30 (160) | 5.12 | 4.331 $^{+0.0005}_{-0.0004}$ | 0.14 | 0.35 | 0.39 |
| 7.87 (200) | 6.50 | 5.118 $^{+0.0005}_{-0.0004}$ | 0.14 | 0.43 | 0.47 |

ALTERNATE SHAFTS SEE PAGE 239


Send Quote Requests to info@automatedpt.com
Call +1(800)985-6929 To Order or Order Online At Nordgearmotors.com

# SK 23 + Motor
# SK 23F + Motor

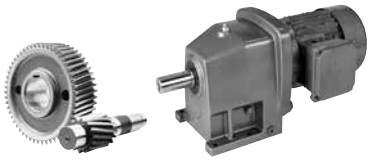

DRIVESYSTEMS



## SK 23

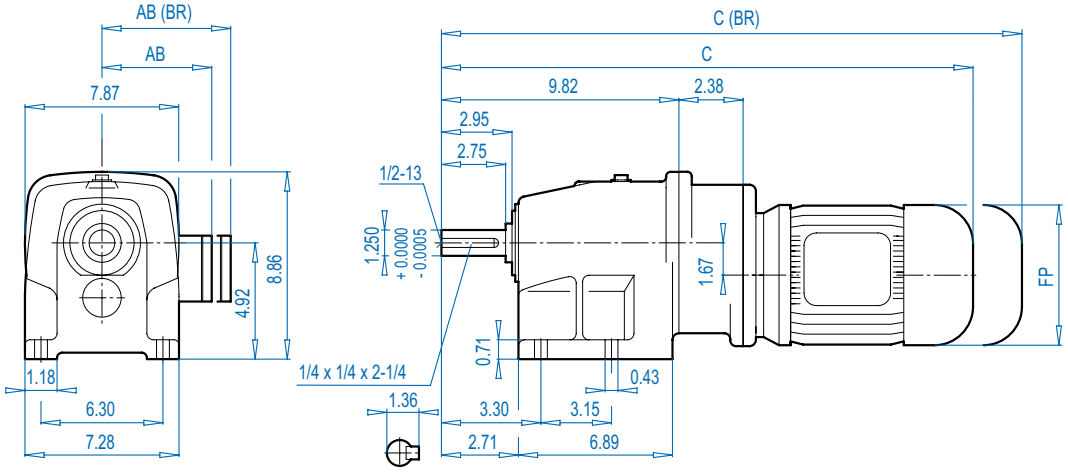


## SK 23F

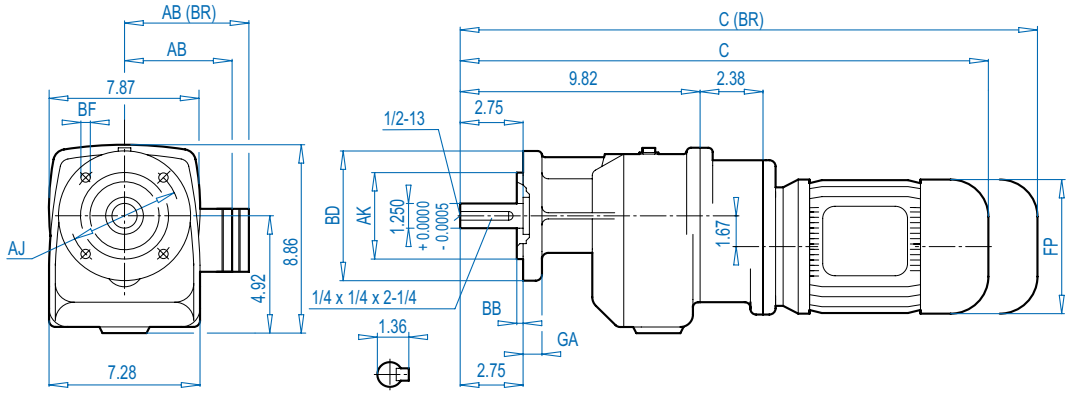


ALTERNATE SHAFTS SEE PAGE 239

### Mounting Flange

| BD (mm) | AJ | AK | BB | BF | GA |
|---|---|---|---|---|---|
| 6.30 (160) | 5.12 | 4.331 $^{+0.0005}_{-0.0004}$ | 0.14 | 0.35 | 0.39 |
| 7.87 (200) | 6.50 | 5.118 $^{+0.0005}_{-0.0004}$ | 0.14 | 0.43 | 0.47 |

### Motor Dimensions

| Standard efficiency | 63S/L | 71S/L | 80S/L | | | | For Other Connection Possibilities please see ⇨🕮 236 |
|---|---|---|---|---|---|---|---|
| Energy efficiency | | | 80LH | | | | |
| AB | 4.53 | 4.88 | 5.59 | | | |  |
| AB (BR) | 4.84 | 5.24 | 5.63 | | | | |
| C | 19.88 | 21.45 | 22.44 | | | | |
| C (BR) | 22.08 | 23.74 | 24.96 | | | | |
| FP | 4.84 | 5.43 | 6.14 | | | | |

**(BR)** denotes Brakemotor


Send Quote Requests to info@automatedpt.com
Call +1(800)985-6929 To Order or Order Online At Nordgearmotors.com

DRIVESYSTEMS

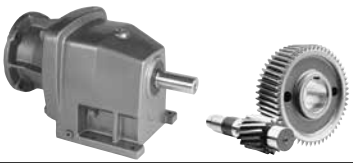

# SK 23 + NEMA
# SK 23F + NEMA



## SK 23

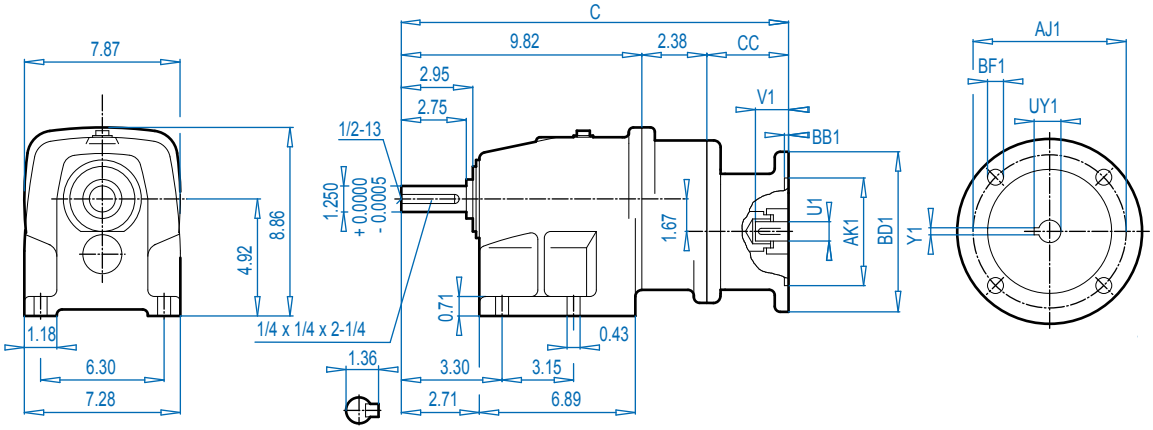


## SK 23F

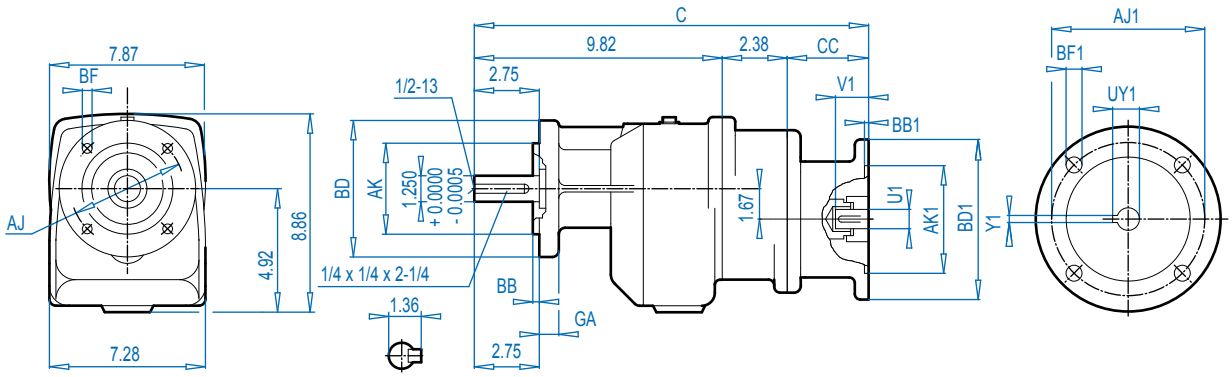


ALTERNATE SHAFTS SEE PAGE 239

### Mounting Flange

| BD (mm) | AJ | AK | BB | BF | GA |
|---|---|---|---|---|---|
| 6.30 (160) | 5.12 | 4.331 $^{+0.0005}_{-0.0004}$ | 0.14 | 0.35 | 0.39 |
| 7.87 (200) | 6.50 | 5.118 $^{+0.0005}_{-0.0004}$ | 0.14 | 0.43 | 0.47 |

### NEMA Dimensions

| Type | AJ1 | AK1 | BB1 | BD1 | BF1 | U1 | V1 | UY1 | Y1 | C | CC |
|---|---|---|---|---|---|---|---|---|---|---|---|
| **56C** | 5.88 | 4.500 | 0.18 | 6.54 | 0.43 | 0.625 | 2.06 | 0.71 | 0.188 | 16.65 | 4.45 |
| **140TC** | 5.88 | 4.500 | 0.18 | 6.54 | 0.43 | 0.875 | 2.12 | 0.96 | 0.188 | 16.65 | 4.45 |


Send Quote Requests to info@automatedpt.com
Call +1(800)985-6929 To Order or Order Online At Nordgearmotors.com

Send Quote Requests to info@automatedpt.com
Call +1(800)985-6929 To Order or Order Online At Nordgearmotors.com

# SK 23 - W
# SK 23F - W

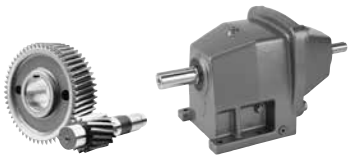

DRIVESYSTEMS



## SK 23

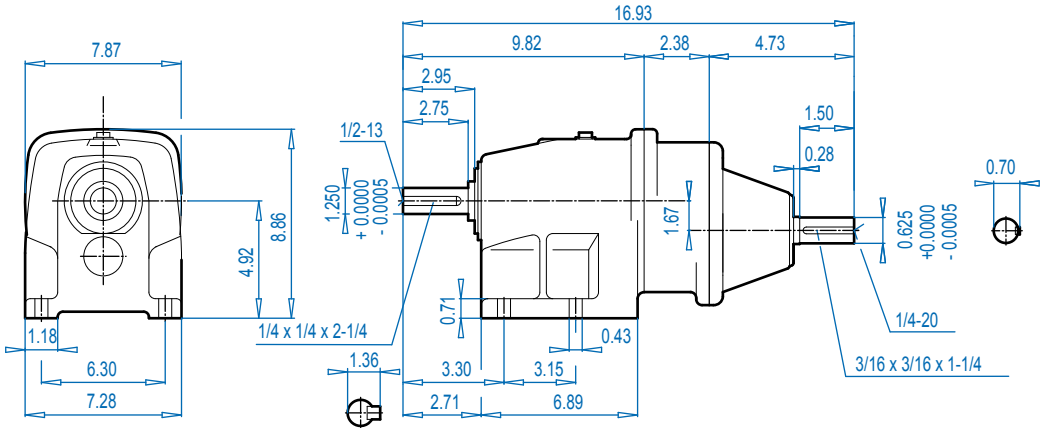


ALTERNATE SHAFTS SEE PAGE 239

## SK 23F

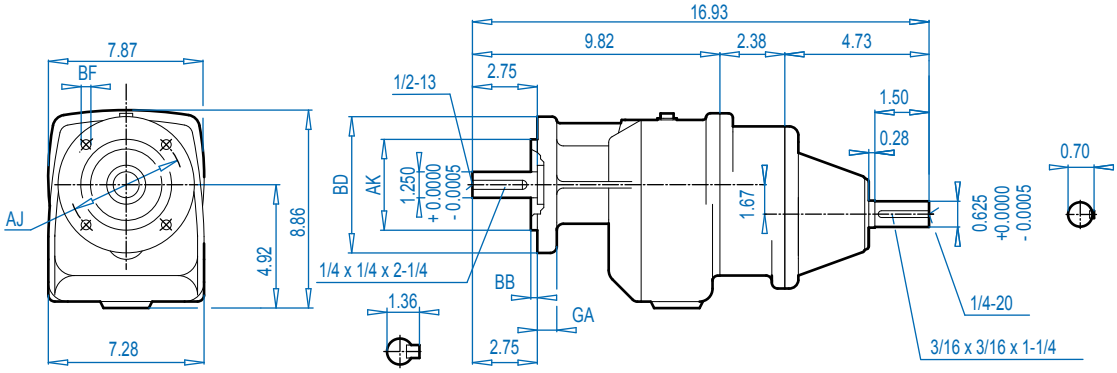


### Mounting Flange

| BD (mm) | AJ | AK | BB | BF | GA |
|---|---|---|---|---|---|
| 6.30 (160) | 5.12 | 4.331 $^{+0.0005}_{-0.0004}$ | 0.14 | 0.35 | 0.39 |
| 7.87 (200) | 6.50 | 5.118 $^{+0.0005}_{-0.0004}$ | 0.14 | 0.43 | 0.47 |


Send Quote Requests to info@automatedpt.com
Call +1(800)985-6929 To Order or Order Online At Nordgearmotors.com

DRIVESYSTEMS

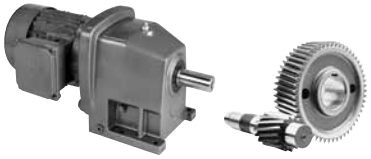

# SK 32 + Motor
# SK 32F + Motor



## SK 32

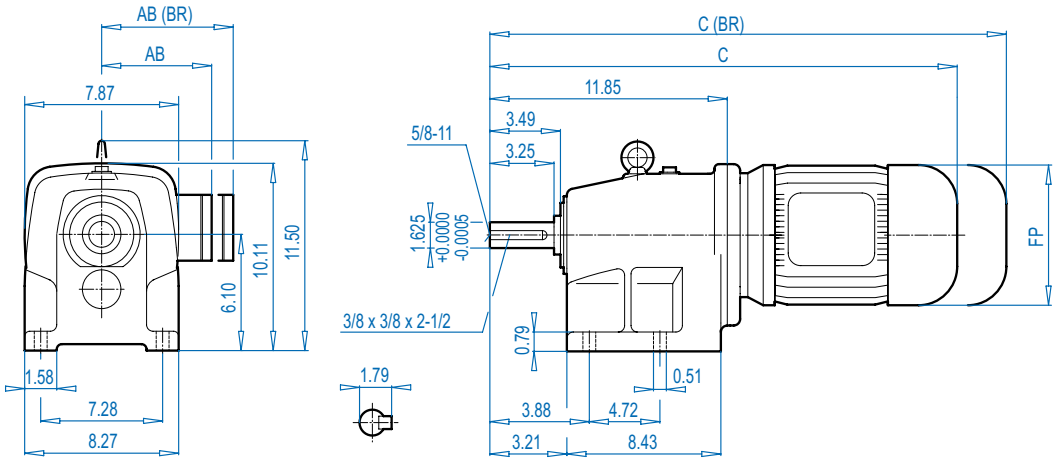


## SK 32F

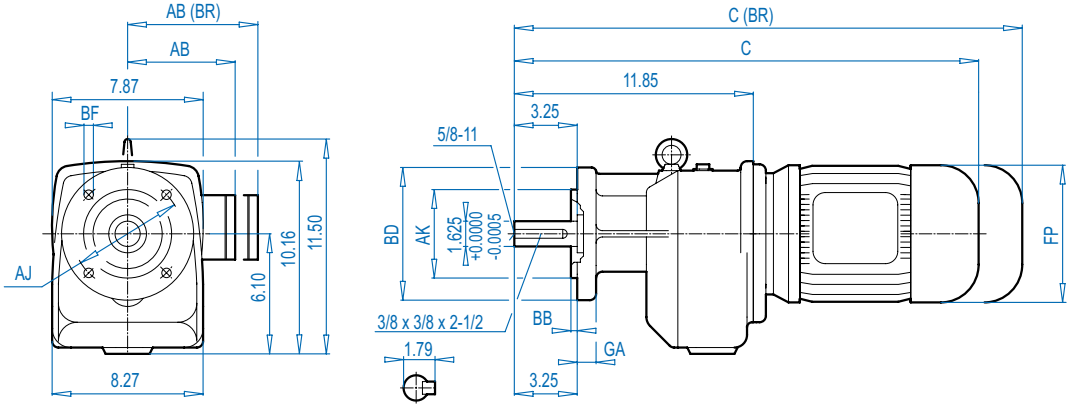


### Mounting Flange

| BD (mm) | AJ | AK | BB | BF | GA |
|---|---|---|---|---|---|
| 7.87 (200) | 6.50 | 5.118 $^{+0.0005}_{-0.0004}$ | 0.14 | 0.43 | 0.47 |
| 9.84 (250) | 8.46 | 7.087 $^{+0.0005}_{-0.0004}$ | 0.16 | 0.55 | 0.63 |

### Motor Dimensions

| Standard efficiency | 71S/L | 80S/L | 90S/L | 100L | 112M | | 132S/M | For Other Connection Possibilities please see ⇨🕮 236 |
|---|---|---|---|---|---|---|---|---|
| Energy efficiency | | 80LH | 90SH/LH | 100LH | | 112MH | 132SH/MH | |
| **AB** | 4.88 | 5.59 | 5.79 | 6.65 | 7.05 | 7.05 | 8.03 |  |
| **AB (BR)** | 5.24 | 5.63 | 5.83 | 6.26 | 6.69 | 6.69 | 7.72 | |
| **C** | 20.93 | 21.92 | 23.53 | 24.71 | 25.62 | 26.59 | 29.00 | |
| **C (BR)** | 23.21 | 24.43 | 26.48 | 28.29 | 29.28 | 30.25 | 33.21 | |
| **FP** | 5.59 | 6.14 | 6.92 | 7.63 | 8.58 | 8.58 | 10.16 | |

**(BR)** denotes Brakemotor

ALTERNATE SHAFTS SEE PAGE 239


Send Quote Requests to info@automatedpt.com
Call +1(800)985-6929 To Order or Order Online At Nordgearmotors.com

# SK 32 + NEMA
# SK 32F + NEMA

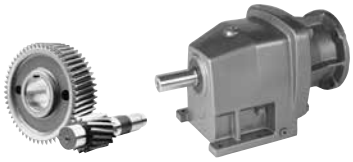



## SK 32

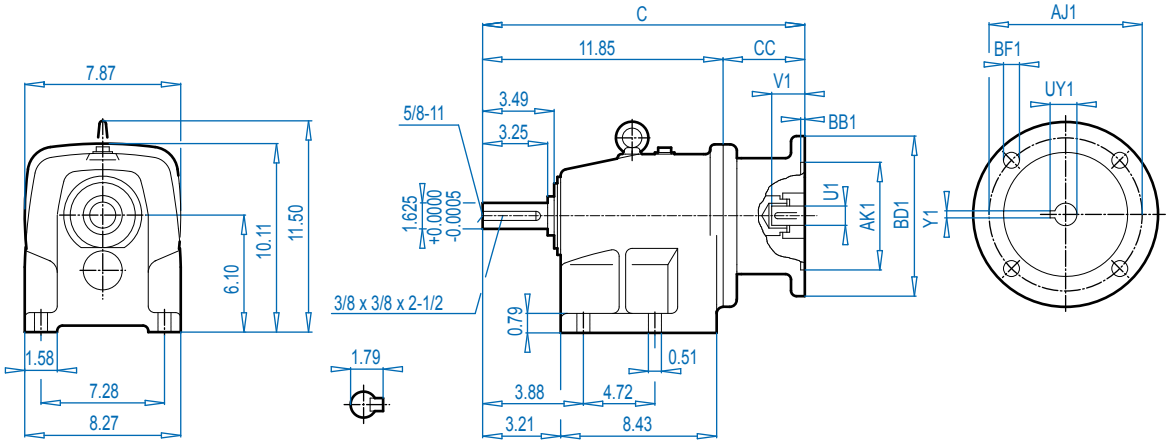


## SK 32F

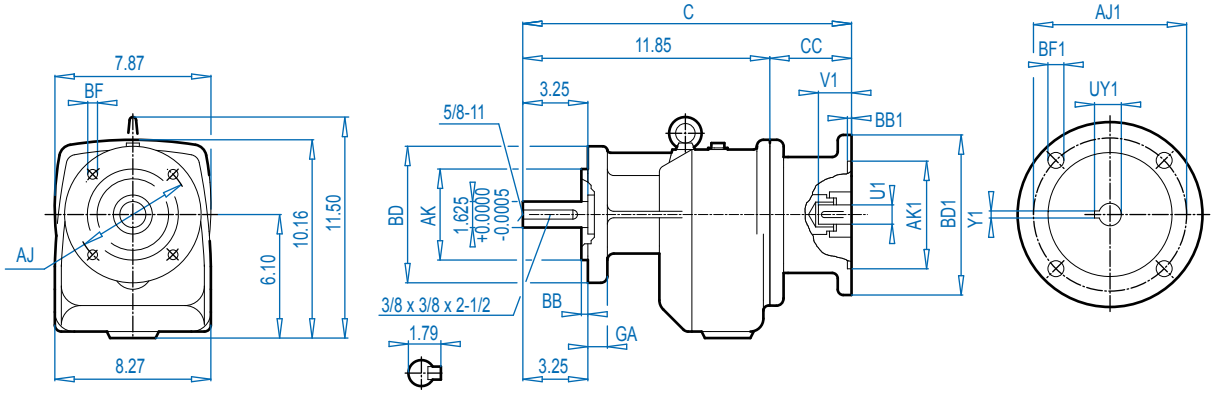


### Mounting Flange

| BD (mm) | AJ | AK | BB | BF | GA |
|---|---|---|---|---|---|
| 7.87 (200) | 6.50 | 5.118 $^{+0.0005}_{-0.0004}$ | 0.14 | 0.43 | 0.47 |
| 9.84 (250) | 8.46 | 7.087 $^{+0.0005}_{-0.0004}$ | 0.16 | 0.55 | 0.63 |

### NEMA Dimensions

| Type | AJ1 | AK1 | BB1 | BD1 | BF1 | U1 | V1 | UY1 | Y1 | C | CC |
|---|---|---|---|---|---|---|---|---|---|---|---|
| **56C** | 5.88 | 4.500 | 0.18 | 6.54 | 0.43 | 0.625 | 2.06 | 0.71 | 0.188 | 16.46 | 4.61 |
| **140TC** | 5.88 | 4.500 | 0.18 | 6.54 | 0.43 | 0.875 | 2.12 | 0.96 | 0.188 | 16.46 | 4.61 |
| **180TC** | 7.25 | 8.500 | 0.23 | 9.17 | 0.59 | 1.125 | 2.62 | 1.24 | 0.250 | 17.36 | 5.51 |
| **210TC** | 7.25 | 8.500 | 0.23 | 9.17 | 0.59 | 1.375 | 3.12 | 1.52 | 0.312 | 18.50 | 6.65 |


Send Quote Requests to info@automatedpt.com
Call +1(800)985-6929 To Order or Order Online At Nordgearmotors.com

Send Quote Requests to info@automatedpt.com
Call +1(800)985-6929 To Order or Order Online At Nordgearmotors.com



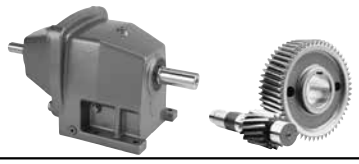

# SK 32 - W
# SK 32F - W



## SK 32

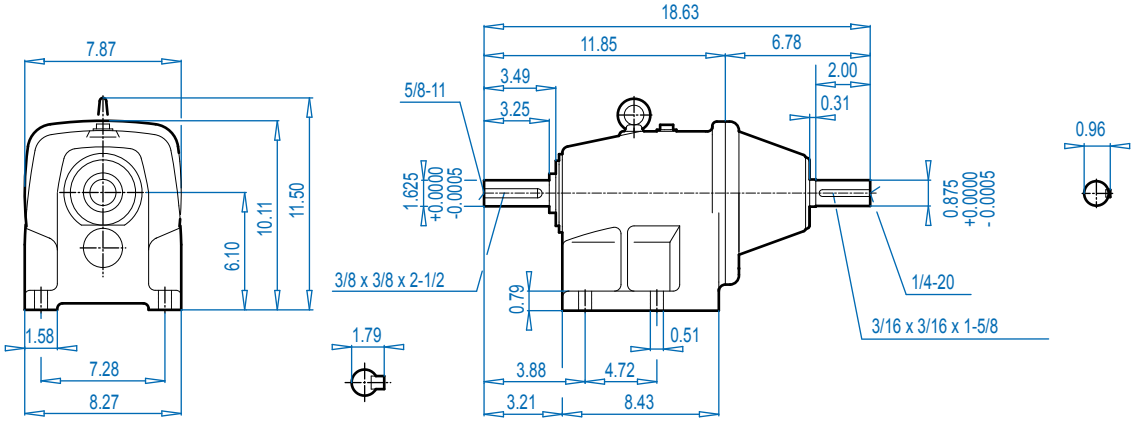


## SK 32F

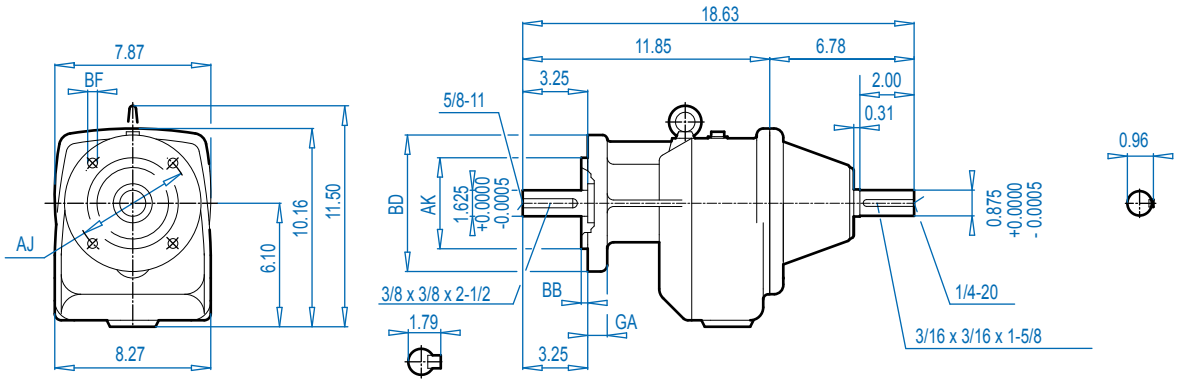


### Mounting Flange

| BD (mm) | AJ | AK | BB | BF | GA |
|---|---|---|---|---|---|
| 7.87 (200) | 6.50 | 5.118 $^{+0.0005}_{-0.0004}$ | 0.14 | 0.43 | 0.47 |
| 9.84 (250) | 8.46 | 7.087 $^{+0.0005}_{-0.0004}$ | 0.16 | 0.55 | 0.63 |

ALTERNATE SHAFTS SEE PAGE 239


Send Quote Requests to info@automatedpt.com
Call +1(800)985-6929 To Order or Order Online At Nordgearmotors.com

# SK 33N + Motor
# SK 33NF + Motor

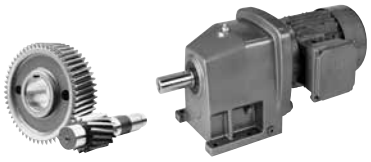

DRIVESYSTEMS



## SK 33N

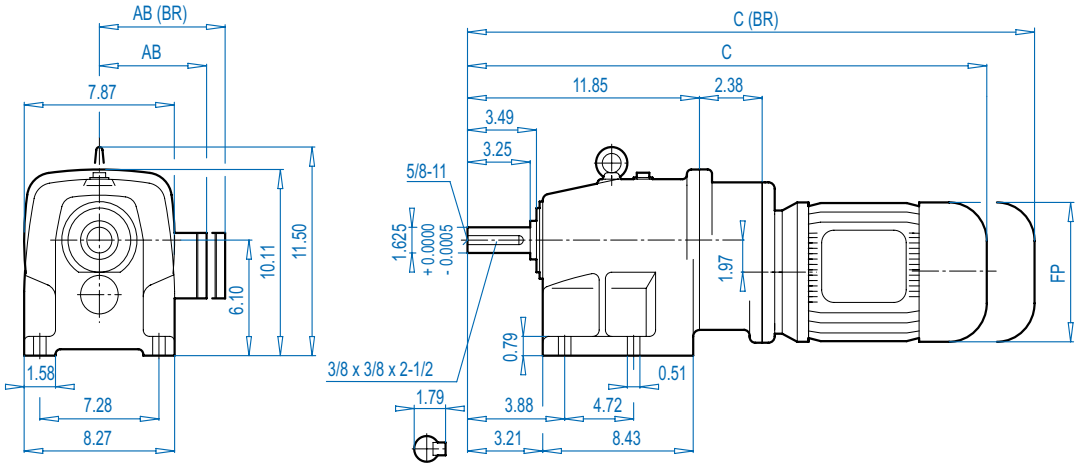


## SK 33NF

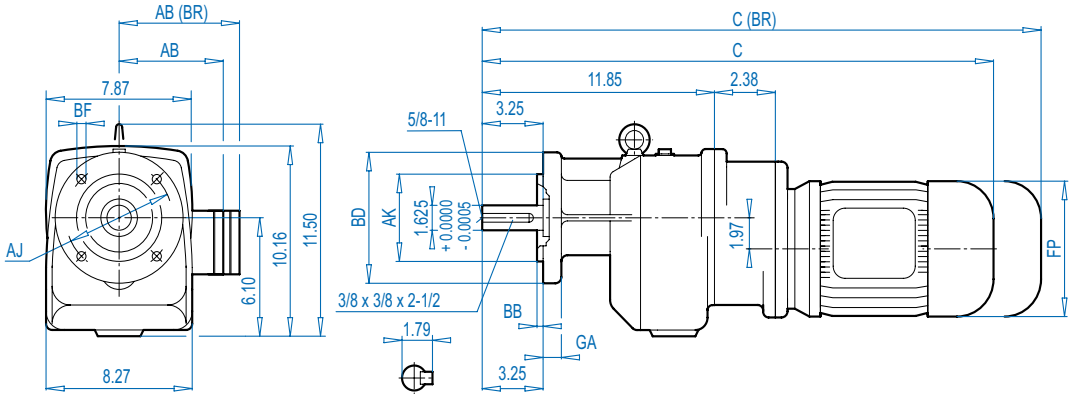


ALTERNATE SHAFTS SEE PAGE 239

### Mounting Flange

| BD (mm) | AJ | AK | BB | BF | GA |
|---|---|---|---|---|---|
| 7.87 (200) | 6.50 | 5.118 $^{+0.0005}_{-0.0004}$ | 0.14 | 0.43 | 0.47 |
| 9.84 (250) | 8.46 | 7.087 $^{+0.0005}_{-0.0004}$ | 0.16 | 0.55 | 0.63 |

### Motor Dimensions

| Standard efficiency | 63S/L | 71S/L | 80S/L | 90S/L | | | For Other Connection Possibilities please see ⇨🕮 236 |
|---|---|---|---|---|---|---|---|
| Energy efficiency | | | 80S/L | 90SH/LH | | | |
| AB | 4.53 | 4.88 | 5.59 | 5.79 | | |  |
| AB (BR) | 4.84 | 5.24 | 5.63 | 5.83 | | | |
| C | 21.95 | 23.53 | 24.51 | 26.13 | | | |
| C (BR) | 24.16 | 25.81 | 27.03 | 29.08 | | | |
| FP | 4.84 | 5.43 | 6.14 | 6.92 | | | |

**(BR)** denotes Brakemotor


Send Quote Requests to info@automatedpt.com
Call +1(800)985-6929 To Order or Order Online At Nordgearmotors.com

DRIVESYSTEMS

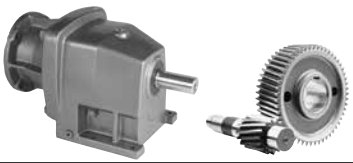

# SK 33N + NEMA
# SK 33NF + NEMA



## SK 33N

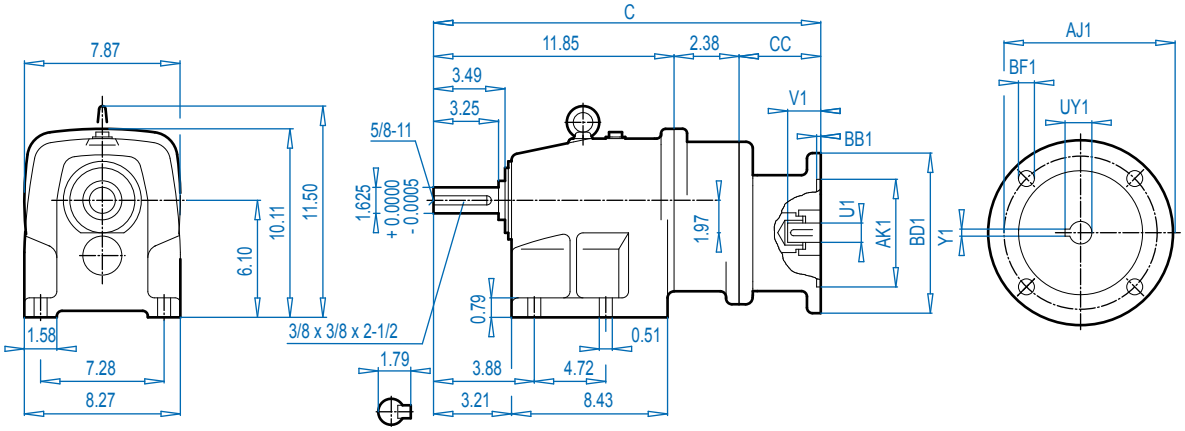


## SK 33NF

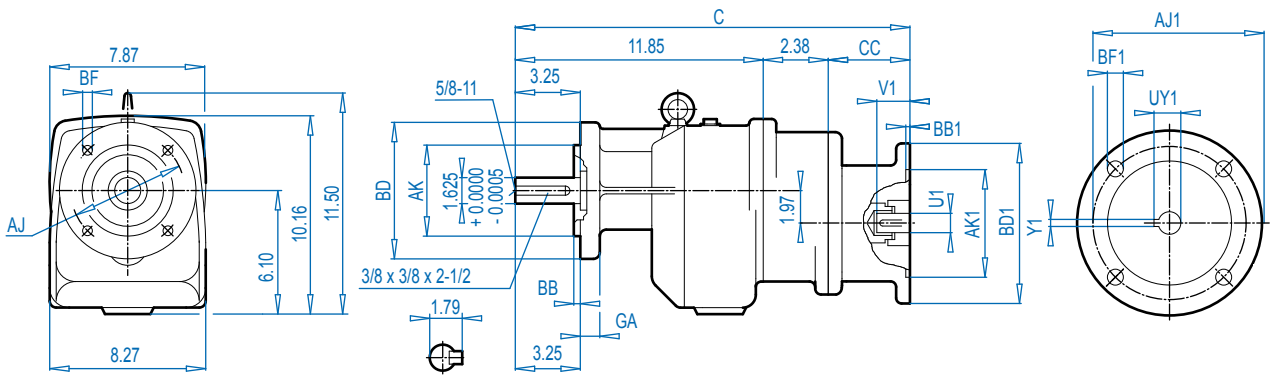


ALTERNATE SHAFTS SEE PAGE 239

### Mounting Flange

| BD (mm) | AJ | AK | BB | BF | GA |
|---|---|---|---|---|---|
| 7.87 (200) | 6.50 | 5.118 $^{+0.0005}_{-0.0004}$ | 0.14 | 0.43 | 0.47 |
| 9.84 (250) | 8.46 | 7.087 $^{+0.0005}_{-0.0004}$ | 0.16 | 0.55 | 0.63 |

### NEMA Dimensions

| Type | AJ1 | AK1 | BB1 | BD1 | BF1 | U1 | V1 | UY1 | Y1 | C | CC |
|---|---|---|---|---|---|---|---|---|---|---|---|
| **56C** | 5.88 | 4.500 | 0.18 | 6.54 | 0.43 | 0.625 | 2.06 | 0.71 | 0.188 | 18.68 | 4.45 |
| **140TC** | 5.88 | 4.500 | 0.18 | 6.54 | 0.43 | 0.875 | 2.12 | 0.96 | 0.188 | 18.68 | 4.45 |


Send Quote Requests to info@automatedpt.com
Call +1(800)985-6929 To Order or Order Online At Nordgearmotors.com

Send Quote Requests to info@automatedpt.com
Call +1(800)985-6929 To Order or Order Online At Nordgearmotors.com

# SK 33N - W
# SK 33NF - W

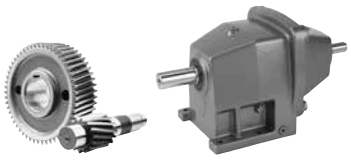

DRIVESYSTEMS



## SK 33N

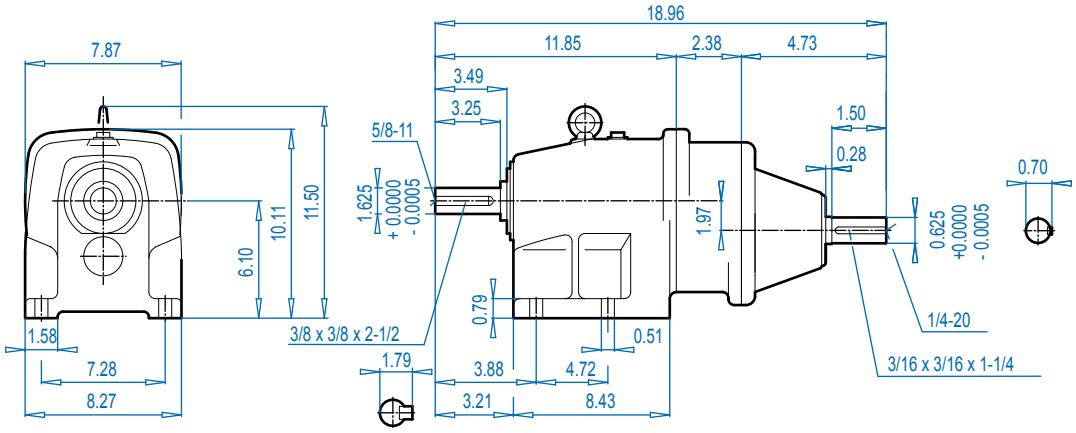


## SK 33NF

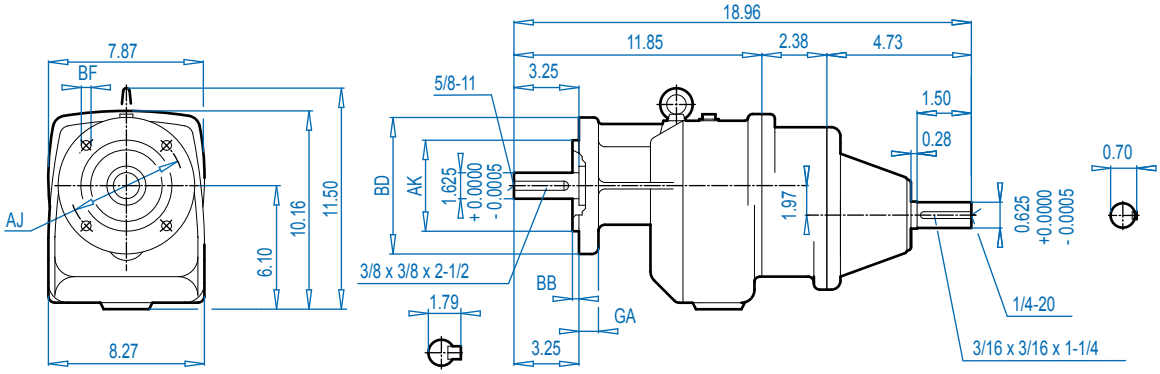


### Mounting Flange

| BD (mm) | AJ | AK | BB | BF | GA |
|---|---|---|---|---|---|
| 7.87 (200) | 6.50 | 5.118 $^{+0.0005}_{-0.0004}$ | 0.14 | 0.43 | 0.47 |
| 9.84 (250) | 8.46 | 7.087 $^{+0.0005}_{-0.0004}$ | 0.16 | 0.55 | 0.63 |

ALTERNATE SHAFTS SEE PAGE 239


Send Quote Requests to info@automatedpt.com
Call +1(800)985-6929 To Order or Order Online At Nordgearmotors.com

DRIVESYSTEMS



# SK 42 + Motor
# SK 42F + Motor



## SK 42

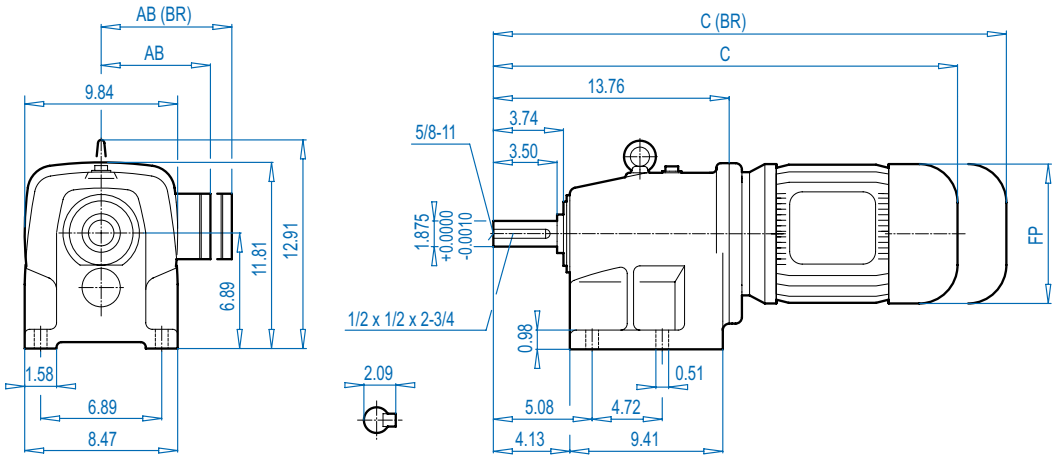


## SK 42F

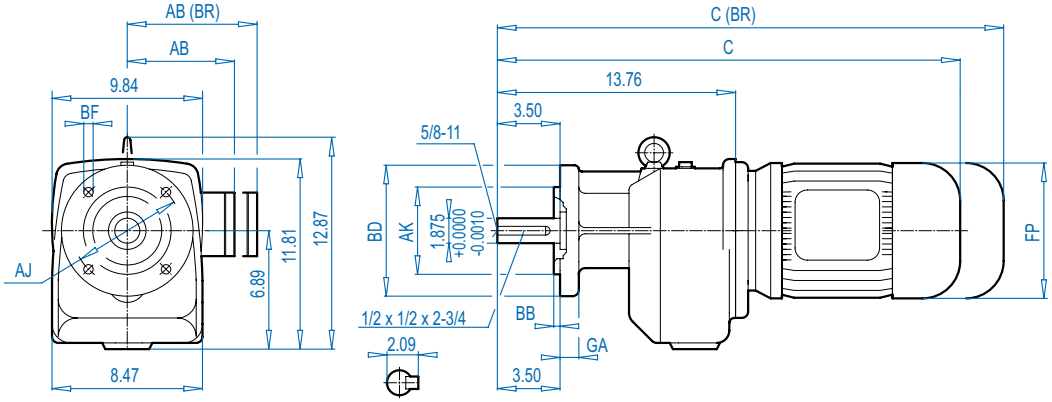


ALTERNATE SHAFTS SEE PAGE 239

### Mounting Flange

| BD (mm) | AJ | AK | BB | BF | GA |
|---|---|---|---|---|---|
| 7.87 (200) | 6.50 | 5.118 $^{+0.0005}_{-0.0004}$ | 0.14 | 0.43 | 0.55 |
| 9.84 (250) | 8.46 | 7.087 $^{+0.0005}_{-0.0004}$ | 0.16 | 0.55 | 0.63 |

### Motor Dimensions

| Standard efficiency | 90S/L | 100L | 112M | | 132S/M | 160M/L | | For Other Connection Possibilities please see ⇨📖 236 |
|---|---|---|---|---|---|---|---|---|
| Energy efficiency | 90SH/LH | 100LH | | 112MH | 132SH/MH | 160MH | 160LH | |
| **AB** | 5.79 | 6.65 | 7.05 | 7.05 | 8.03 | 8.90 | 8.90 | |
| **AB (BR)** | 5.83 | 6.26 | 6.69 | 6.69 | 7.72 | 8.90 | 8.90 | |
| **C** | 24.65 | 25.83 | 26.73 | 27.70 | 30.12 | 32.60 | 34.17 | |
| **C (BR)** | 27.60 | 29.41 | 30.39 | 31.36 | 34.33 | 39.17 | 40.91 | |
| **FP** | 6.92 | 7.63 | 8.58 | 8.58 | 10.16 | 12.60 | 12.60 | |



**(BR)** denotes Brakemotor


Send Quote Requests to info@automatedpt.com
Call +1(800)985-6929 To Order or Order Online At Nordgearmotors.com

# SK 42 + NEMA
# SK 42F + NEMA

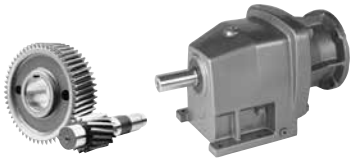

DRIVESYSTEMS



## SK 42

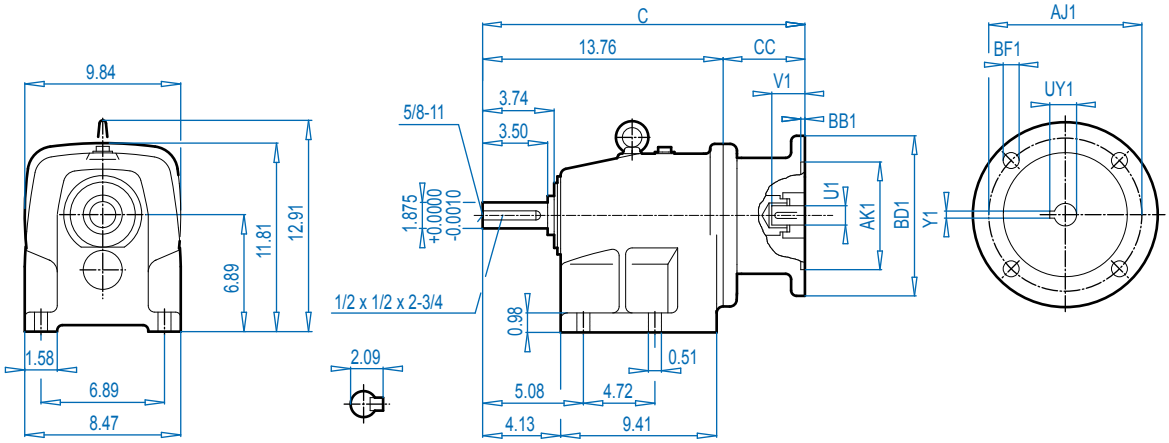


## SK 42F

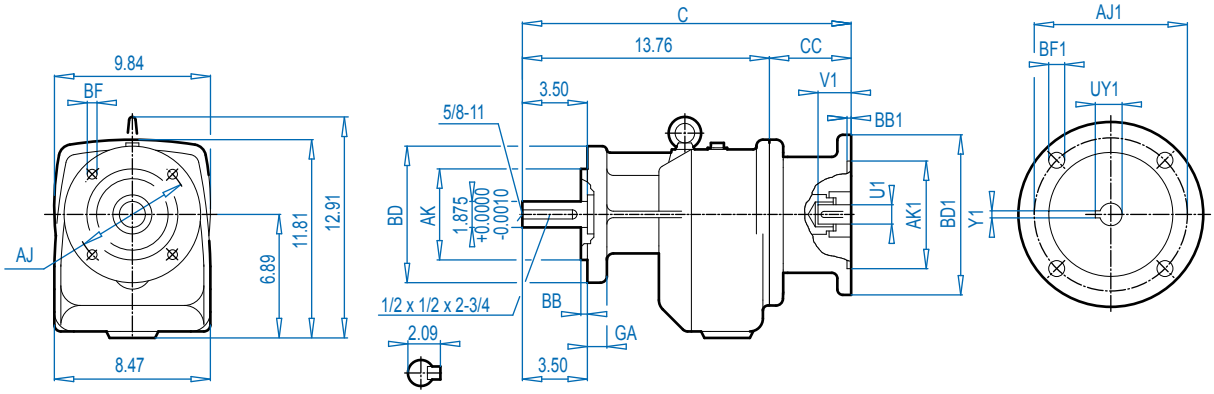


ALTERNATE SHAFTS SEE PAGE 239

### Mounting Flange

| BD (mm) | AJ | AK | BB | BF | GA |
|---|---|---|---|---|---|
| 7.87 (200) | 6.50 | 5.118 $^{+0.0005}_{-0.0004}$ | 0.14 | 0.43 | 0.55 |
| 9.84 (250) | 8.46 | 7.087 $^{+0.0005}_{-0.0004}$ | 0.16 | 0.55 | 0.63 |

### NEMA Dimensions

| Type | AJ1 | AK1 | BB1 | BD1 | BF1 | U1 | V1 | UY1 | Y1 | C | CC |
|---|---|---|---|---|---|---|---|---|---|---|---|
| **56C** | 5.88 | 4.500 | 0.18 | 6.54 | 0.43 | 0.625 | 2.06 | 0.71 | 0.188 | 18.09 | 4.33 |
| **140TC** | 5.88 | 4.500 | 0.18 | 6.54 | 0.43 | 0.875 | 2.12 | 0.96 | 0.188 | 18.09 | 4.33 |
| **180TC** | 7.25 | 8.500 | 0.23 | 9.17 | 0.59 | 1.125 | 2.62 | 1.24 | 0.250 | 21.67 | 7.91 |
| **210TC** | 7.25 | 8.500 | 0.23 | 9.17 | 0.59 | 1.375 | 3.12 | 1.52 | 0.312 | 21.67 | 7.91 |
| **250TC** | 7.25 | 8.500 | 0.23 | 9.17 | 0.59 | 1.625 | 3.75 | 1.80 | 0.375 | 21.67 | 7.91 |


Send Quote Requests to info@automatedpt.com
Call +1(800)985-6929 To Order or Order Online At Nordgearmotors.com

DRIVESYSTEMS

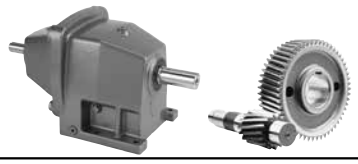

# SK 42 - W
# SK 42F - W



## SK 42

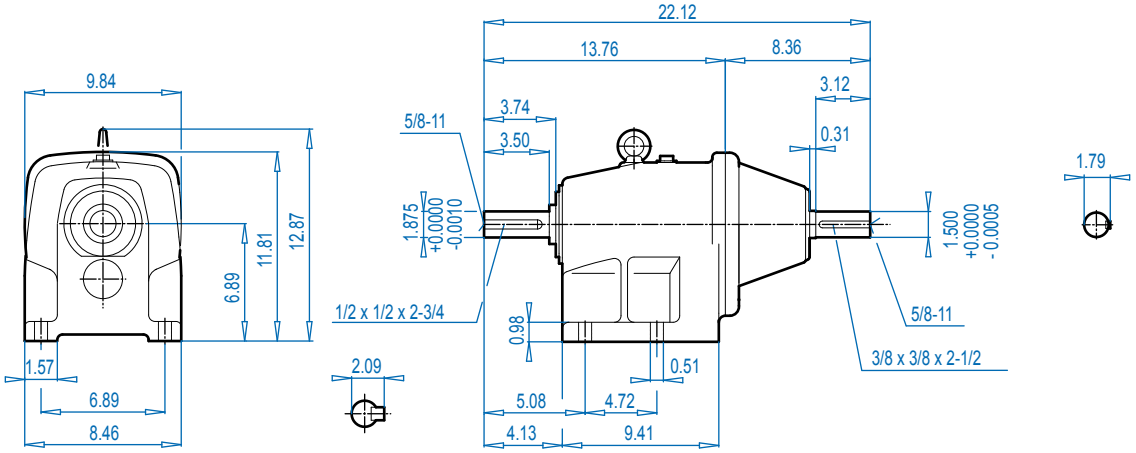


## SK 42F

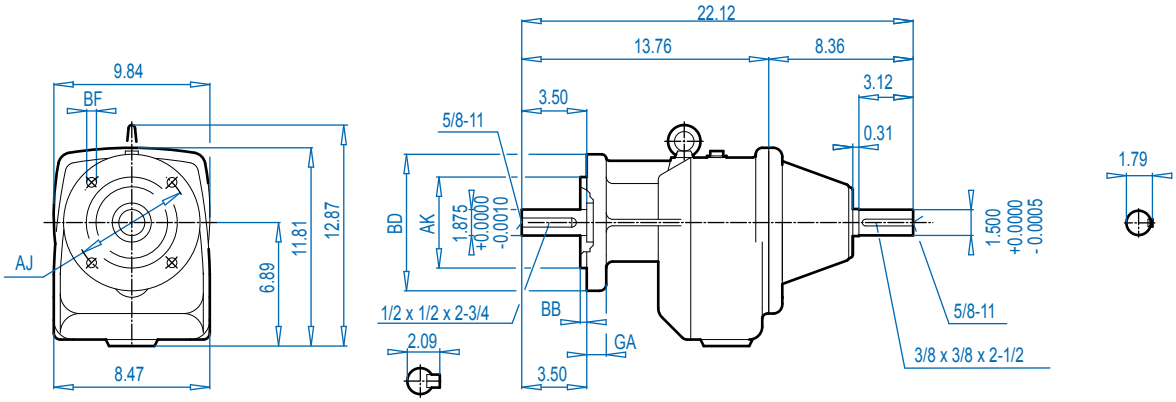


### Mounting Flange

| BD (mm) | AJ | AK | BB | BF | GA |
|---|---|---|---|---|---|
| 7.87 (200) | 6.50 | 5.118 $^{+0.0005}_{-0.0004}$ | 0.14 | 0.43 | 0.55 |
| 9.84 (250) | 8.46 | 7.087 $^{+0.0005}_{-0.0004}$ | 0.16 | 0.55 | 0.63 |

ALTERNATE SHAFTS SEE PAGE 239


Send Quote Requests to info@automatedpt.com
Call +1(800)985-6929 To Order or Order Online At Nordgearmotors.com

# SK 43 + Motor
# SK 43F + Motor

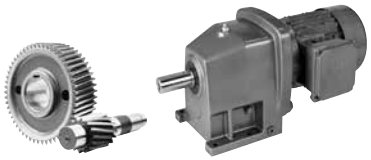

DRIVESYSTEMS



## SK 43

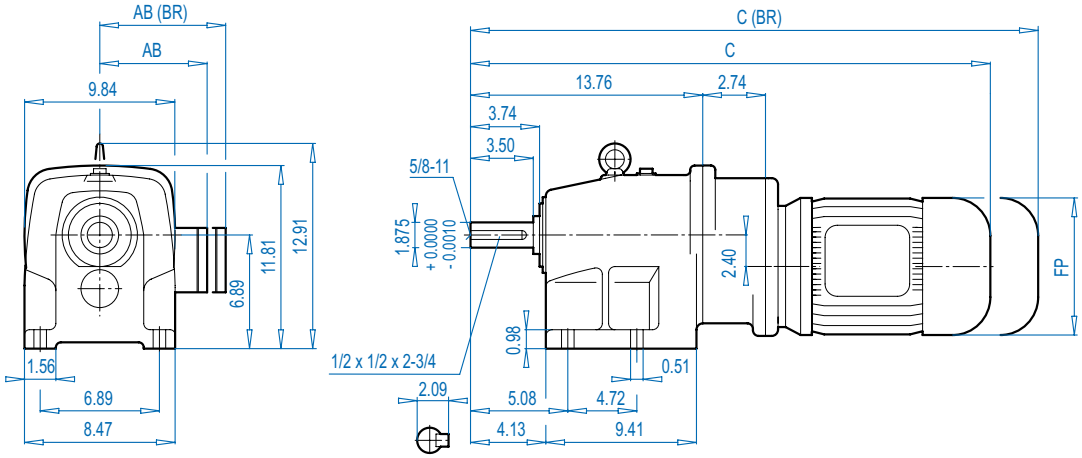


## SK 43F

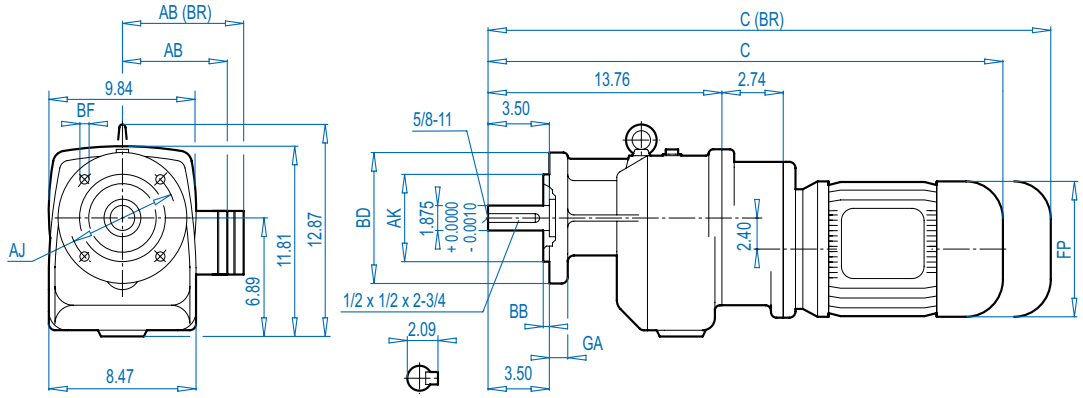


ALTERNATE SHAFTS SEE PAGE 239

### Mounting Flange

| BD (mm) | AJ | AK | BB | BF | GA |
|---|---|---|---|---|---|
| 7.87 (200) | 6.50 | 5.118 $^{+0.0005}_{-0.0004}$ | 0.14 | 0.43 | 0.55 |
| 9.84 (250) | 8.46 | 7.087 $^{+0.0005}_{-0.0004}$ | 0.16 | 0.55 | 0.63 |

### Motor Dimensions

| Standard efficiency | 71S/L | 80S/L | 90S/L | 100L | 112M | | For Other Connection Possibilities please see ⇨ 236 |
|---|---|---|---|---|---|---|---|
| Energy efficiency | | 80LH | 90SH/LH | 100LH | | 112MH | |
| **AB** | 4.88 | 5.59 | 5.79 | 6.65 | 7.05 | **7.05** | |
| **AB (BR)** | 5.24 | 5.63 | 5.83 | 6.26 | 6.69 | **6.69** | |
| **C** | 25.55 | 26.54 | 28.15 | 29.33 | 30.24 | **31.21** | |
| **C (BR)** | 27.83 | 29.05 | 31.10 | 32.91 | 33.90 | **34.87** | |
| **FP** | 5.43 | 6.14 | 6.92 | 7.63 | 8.58 | **8.58** | |



**(BR)** denotes Brakemotor


Send Quote Requests to info@automatedpt.com
Call +1(800)985-6929 To Order or Order Online At Nordgearmotors.com

Send Quote Requests to info@automatedpt.com
Call +1(800)985-6929 To Order or Order Online At Nordgearmotors.com



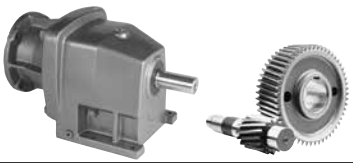

# SK 43 + NEMA
# SK 43F + NEMA



## SK 43

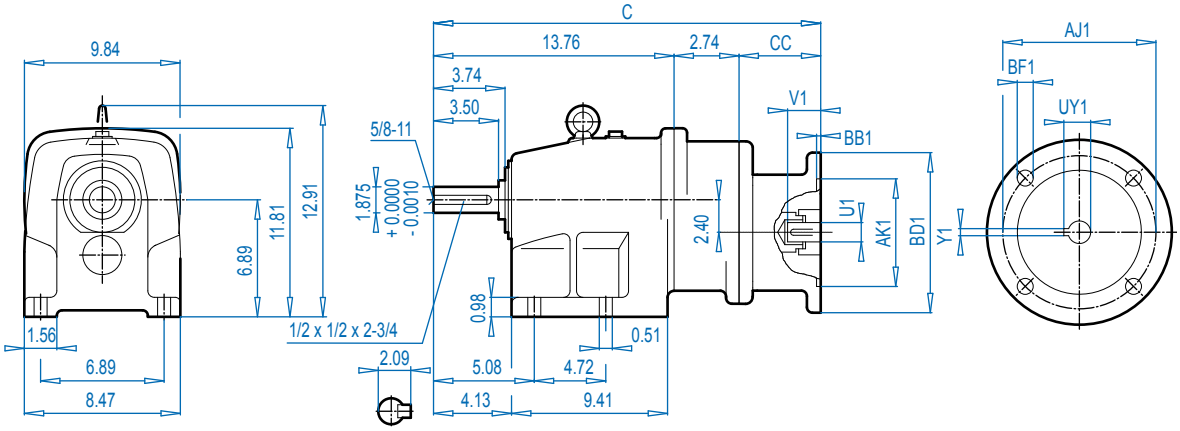


## SK 43F

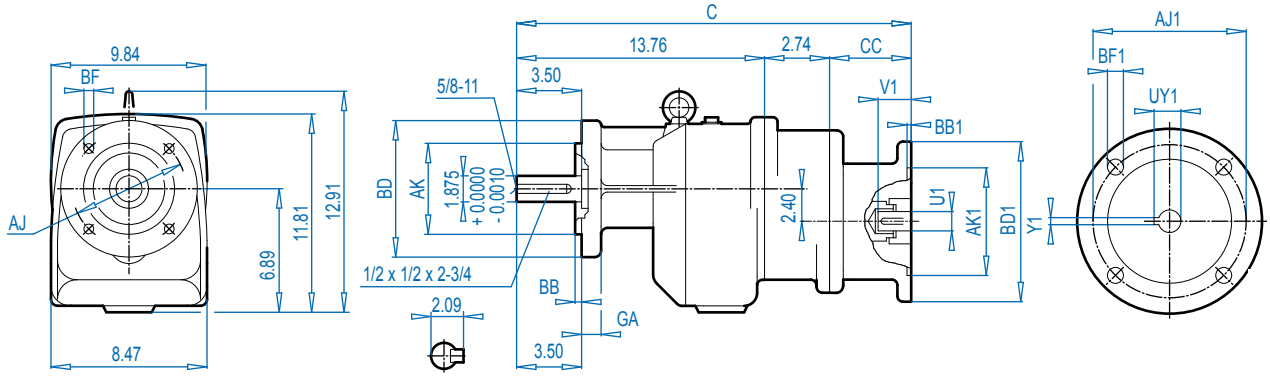


### Mounting Flange

| BD (mm) | AJ | AK | BB | BF | GA |
|---|---|---|---|---|---|
| 7.87 (200) | 6.50 | 5.118 $^{+0.0005}_{-0.0004}$ | 0.14 | 0.43 | 0.55 |
| 9.84 (250) | 8.46 | 7.087 $^{+0.0005}_{-0.0004}$ | 0.16 | 0.55 | 0.63 |

### NEMA Dimensions

| Type | AJ1 | AK1 | BB1 | BD1 | BF1 | U1 | V1 | UY1 | Y1 | C | CC |
|---|---|---|---|---|---|---|---|---|---|---|---|
| **56C** | 5.88 | 4.500 | 0.18 | 6.54 | 0.43 | 0.625 | 2.06 | 0.71 | 0.188 | 21.01 | 4.61 |
| **140TC** | 5.88 | 4.500 | 0.18 | 6.54 | 0.43 | 0.875 | 2.12 | 0.96 | 0.188 | 21.01 | 4.61 |
| **180TC** | 7.25 | 8.500 | 0.23 | 9.17 | 0.59 | 1.125 | 2.62 | 1.24 | 0.250 | 23.14 | 6.65 |

ALTERNATE SHAFTS SEE PAGE 239


Send Quote Requests to info@automatedpt.com
Call +1(800)985-6929 To Order or Order Online At Nordgearmotors.com

Send Quote Requests to info@automatedpt.com
Call +1(800)985-6929 To Order or Order Online At Nordgearmotors.com

# SK 43 - W
# SK 43F - W

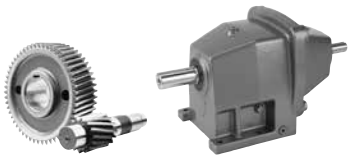

DRIVESYSTEMS



## SK 43

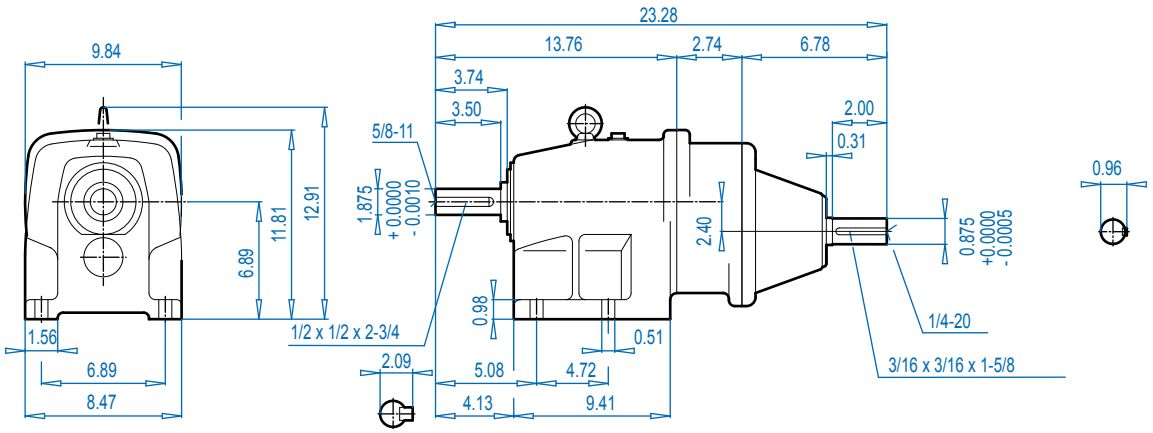


## SK 43F

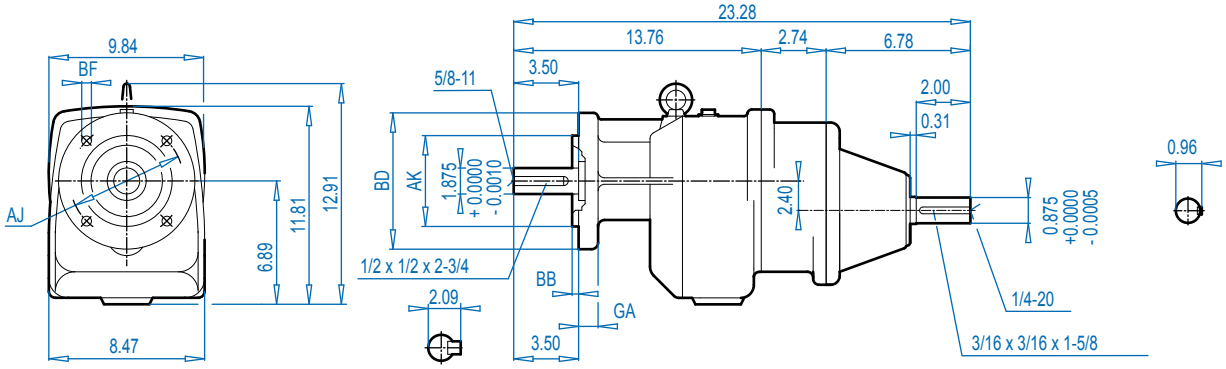


### Mounting Flange

| BD (mm) | AJ | AK | BB | BF | GA |
|---|---|---|---|---|---|
| 7.87 (200) | 6.50 | 5.118 $^{+0.0005}_{-0.0004}$ | 0.14 | 0.43 | 0.55 |
| 9.84 (250) | 8.46 | 7.087 $^{+0.0005}_{-0.0004}$ | 0.16 | 0.55 | 0.63 |

ALTERNATE SHAFTS SEE PAGE 239


Send Quote Requests to info@automatedpt.com
Call +1(800)985-6929 To Order or Order Online At Nordgearmotors.com

DRIVESYSTEMS



# SK 52 + Motor
# SK 52F + Motor



## SK 52

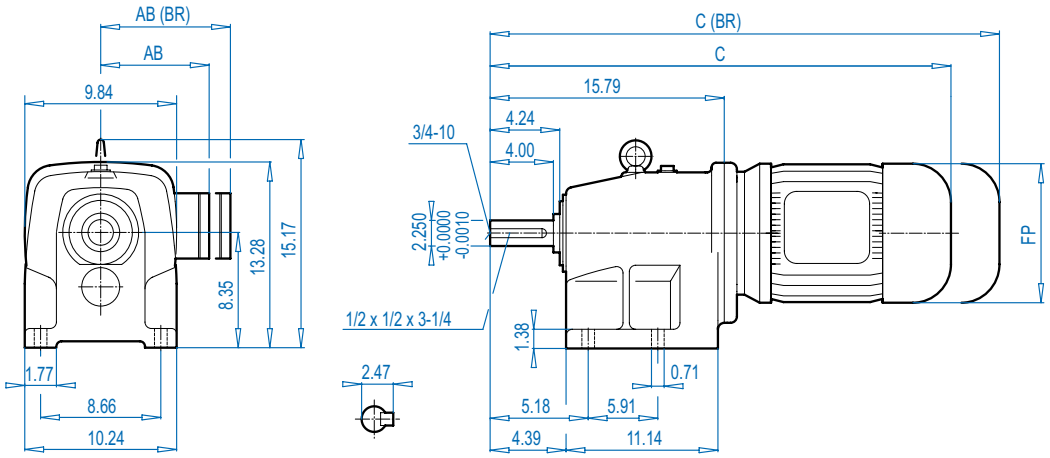


## SK 52F

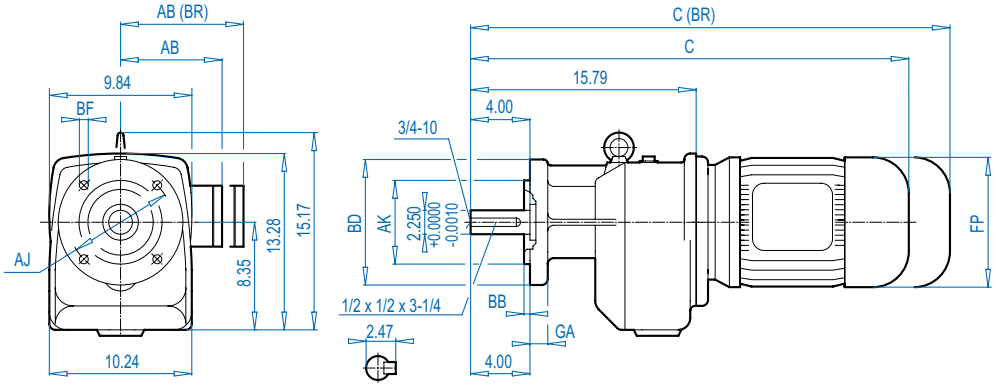


ALTERNATE SHAFTS SEE PAGE 239

### Mounting Flange

| BD (mm) | AJ | AK | BB | BF | GA |
|---|---|---|---|---|---|
| 9.84 (250) | 8.46 | 7.087 $^{+0.0005}_{-0.0004}$ | 0.16 | 0.55 | 0.63 |
| 11.81 (300) | 10.43 | 9.055 $^{+0.0006}_{-0.0005}$ | 0.16 | 0.55 | 0.79 |

### Motor Dimensions

| Standard eff. | 90S/L | 100L | 112M | 132S/M | 160M/L | | 180MX | 180LX | | For Other Connection Possibilities please see ⇨🕮 236 |
|---|---|---|---|---|---|---|---|---|---|---|
| Energy eff. | 90SH/LH | 100LH | | 132SH/MH | 160MH | 160LH | | | 180MH/LH | |
| **AB** | 5.79 | 6.65 | 7.05 | 8.03 | 8.90 | 8.90 | 8.90 | 8.90 | 10.20 |  |
| **AB (BR)** | 5.83 | 6.26 | 6.69 | 7.72 | 8.90 | 8.90 | 8.90 | 8.90 | 10.20 | |
| **C** | 26.68 | 27.86 | 28.77 | 32.15 | 34.63 | 36.21 | 36.21 | 36.21 | 40.30 | |
| **C (BR)** | 29.63 | 31.44 | 32.43 | 36.37 | 41.21 | 42.94 | 42.94 | 42.94 | 44.44 | |
| **FP** | 6.92 | 7.63 | 8.58 | 10.16 | 12.60 | 12.60 | 12.60 | 12.60 | 14.09 | |

**(BR)** denotes Brakemotor.


Send Quote Requests to info@automatedpt.com
Call +1(800)985-6929 To Order or Order Online At Nordgearmotors.com

# SK 52 + NEMA
# SK 52F + NEMA

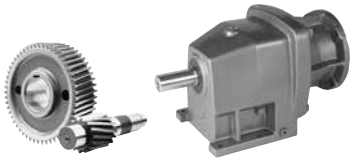



## SK 52

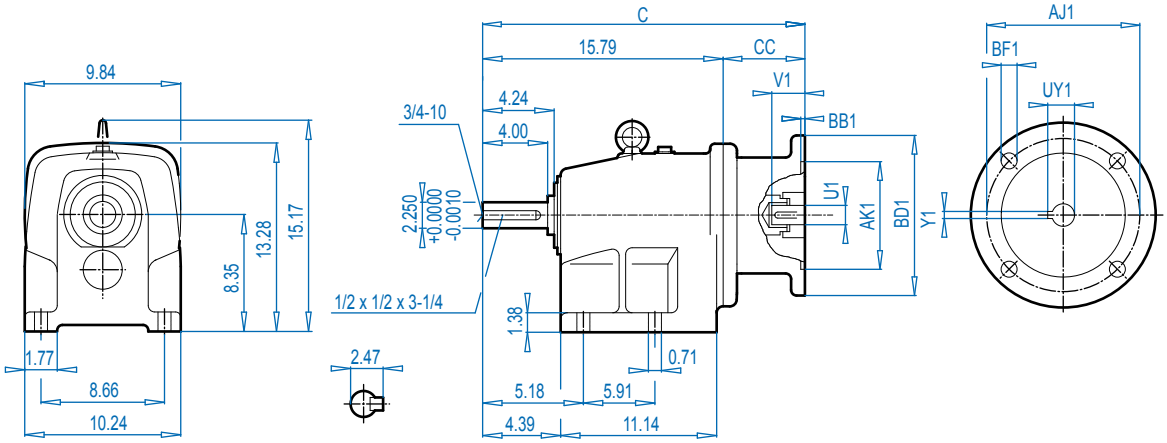


## SK 52F

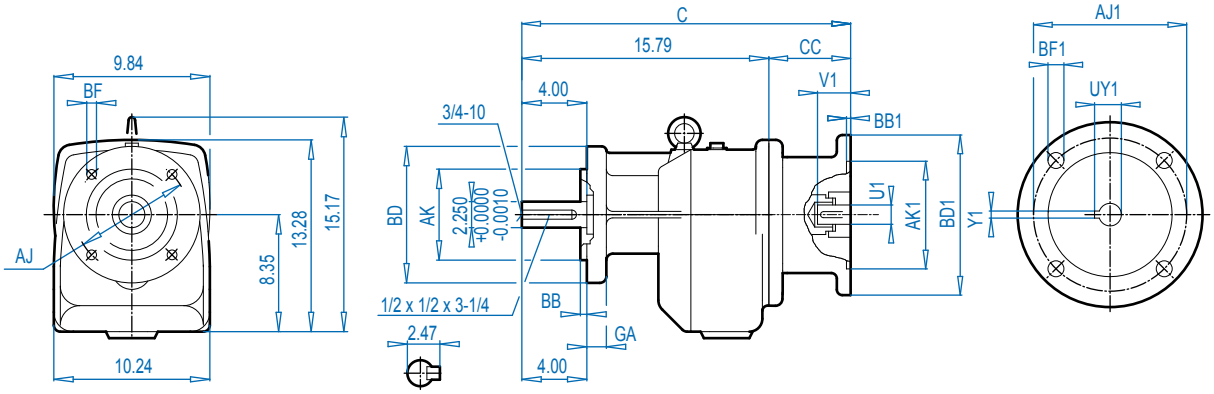


ALTERNATE SHAFTS SEE PAGE 239

### Mounting Flange

| BD (mm) | AJ | AK | BB | BF | GA |
|---|---|---|---|---|---|
| 9.84 (250) | 8.46 | 7.087 $^{+0.0005}_{-0.0004}$ | 0.16 | 0.55 | 0.63 |
| 11.81 (300) | 10.43 | 9.055 $^{+0.0006}_{-0.0005}$ | 0.16 | 0.55 | 0.79 |

### NEMA Dimensions

| Type | AJ1 | AK1 | BB1 | BD1 | BF1 | U1 | V1 | UY1 | Y1 | C | CC |
|---|---|---|---|---|---|---|---|---|---|---|---|
| **56C** | 5.88 | 4.500 | 0.18 | 6.54 | 0.43 | 0.625 | 2.06 | 0.71 | 0.188 | 20.12 | 4.33 |
| **140TC** | 5.88 | 4.500 | 0.18 | 6.54 | 0.43 | 0.875 | 2.12 | 0.96 | 0.188 | 20.12 | 4.33 |
| **180TC** | 7.25 | 8.500 | 0.23 | 9.17 | 0.59 | 1.125 | 2.62 | 1.24 | 0.250 | 23.71 | 7.91 |
| **210TC** | 7.25 | 8.500 | 0.39 | 9.17 | 0.59 | 1.375 | 3.12 | 1.52 | 0.312 | 23.71 | 7.91 |
| **250TC** | 7.25 | 8.500 | 0.23 | 9.17 | 0.59 | 1.625 | 3.75 | 1.80 | 0.375 | 23.71 | 7.91 |
| **280TC** | 9.00 | 10.500 | 0.23 | 13.78 | 0.59 | 1.875 | 4.38 | 2.03 | 0.500 | 24.34 | 8.54 |


Send Quote Requests to info@automatedpt.com
Call +1(800)985-6929 To Order or Order Online At Nordgearmotors.com

DRIVESYSTEMS

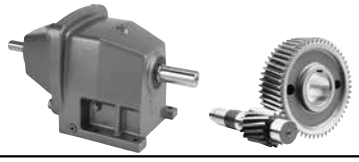

# SK 52 - W
# SK 52F - W



## SK 52

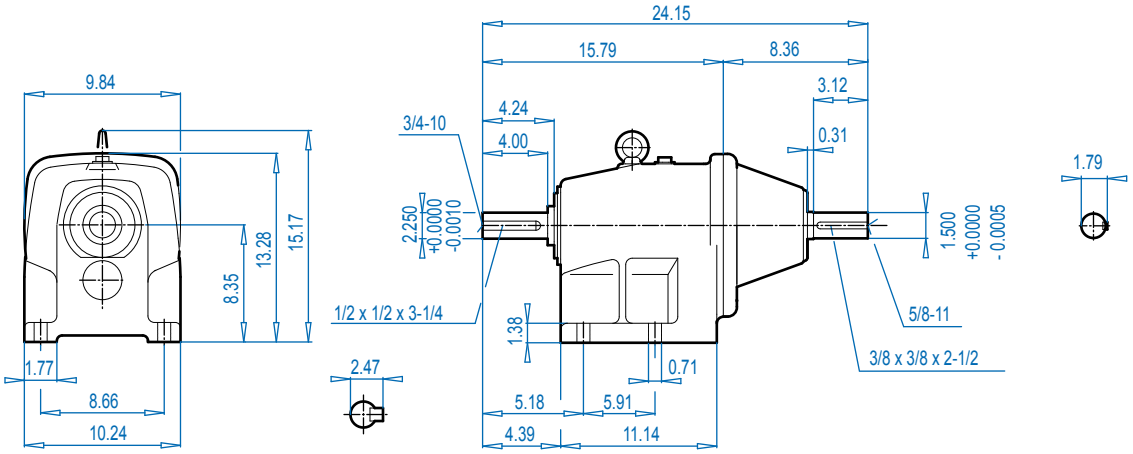


## SK 52F

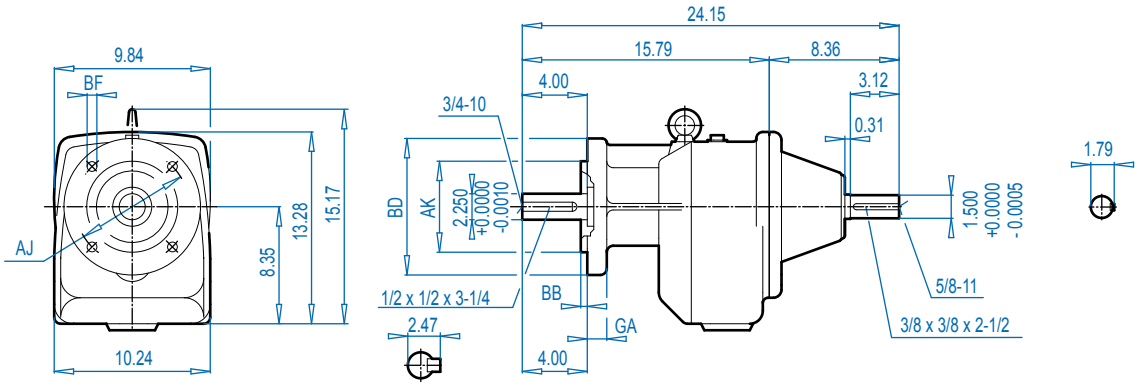


### Mounting Flange

| BD (mm) | AJ | AK | BB | BF | GA |
|---|---|---|---|---|---|
| 9.84 (250) | 8.46 | 7.087 $^{+0.0005}_{-0.0004}$ | 0.16 | 0.55 | 0.63 |
| 11.81 (300) | 10.43 | 9.055 $^{+0.0006}_{-0.0005}$ | 0.16 | 0.55 | 0.79 |

ALTERNATE SHAFTS SEE PAGE 239


Send Quote Requests to info@automatedpt.com
Call +1(800)985-6929 To Order or Order Online At Nordgearmotors.com

# SK 53 + Motor
# SK 53F + Motor

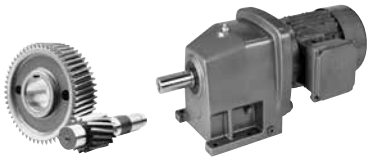

DRIVESYSTEMS



## SK 53

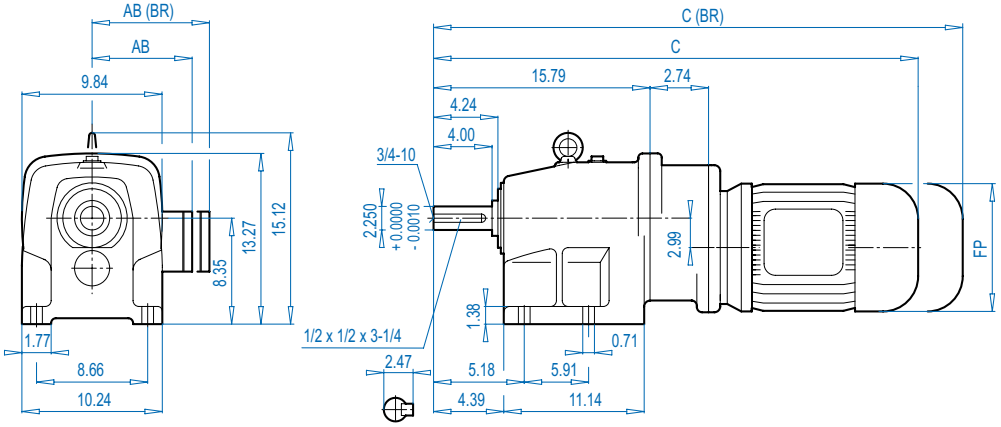


ALTERNATE SHAFTS SEE PAGE 239

## SK 53F

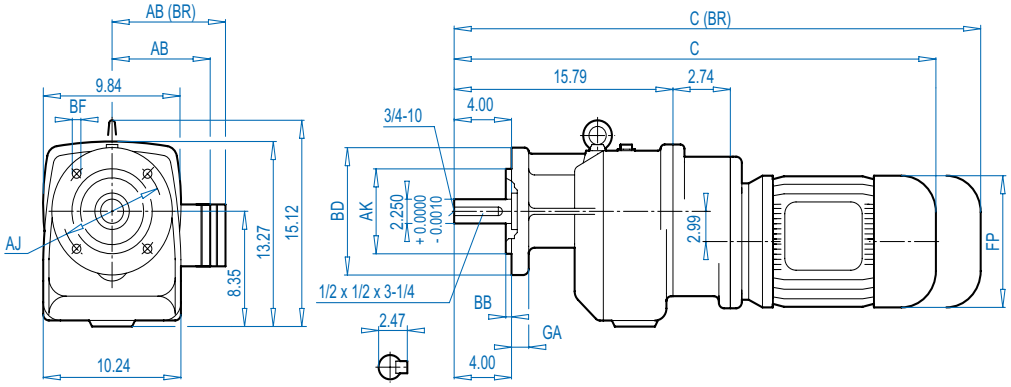


### Mounting Flange

| BD (mm) | AJ | AK | BB | BF | GA |
|---|---|---|---|---|---|
| 9.84 (250) | 8.46 | 7.087 $^{+0.0005}_{-0.0004}$ | 0.16 | 0.55 | 0.63 |
| 11.81 (300) | 10.43 | 9.055 $^{+0.0006}_{-0.0005}$ | 0.16 | 0.55 | 0.79 |

### Motor Dimensions

| Standard efficiency | 71S/L | 80S/L | 90S/L | 100L | 112M | | For Other Connection Possibilities please see ⇨ 236 |
|---|---|---|---|---|---|---|---|
| Energy efficiency | | 80LH | 90SH/LH | 100LH | | 112MH | |
| **AB** | 4.88 | 5.59 | 5.79 | 6.65 | 7.05 | 7.05 | |
| **AB (BR)** | 5.24 | 5.63 | 5.83 | 6.26 | 6.69 | 6.69 | |
| **C** | 27.58 | 28.57 | 30.18 | 31.36 | 32.27 | 33.24 | |
| **C (BR)** | 29.87 | 31.09 | 33.13 | 34.94 | 35.93 | 36.90 | |
| **FP** | 5.43 | 6.14 | 6.92 | 7.63 | 8.58 | 8.58 | |

**(BR)** denotes Brakemotor


Send Quote Requests to info@automatedpt.com
Call +1(800)985-6929 To Order or Order Online At Nordgearmotors.com

DRIVESYSTEMS

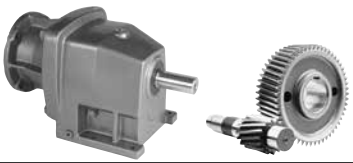

# SK 53 + NEMA
# SK 53F + NEMA



## SK 53

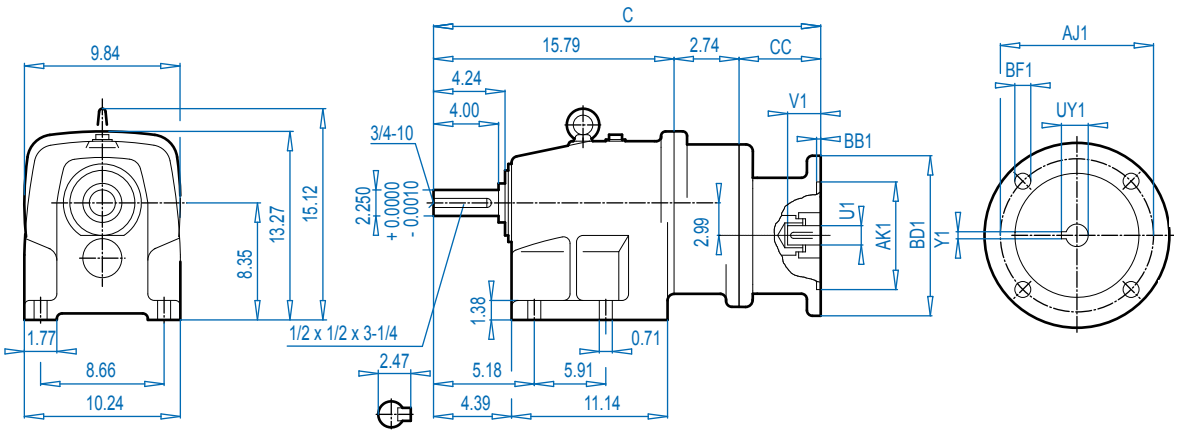


## SK 53F

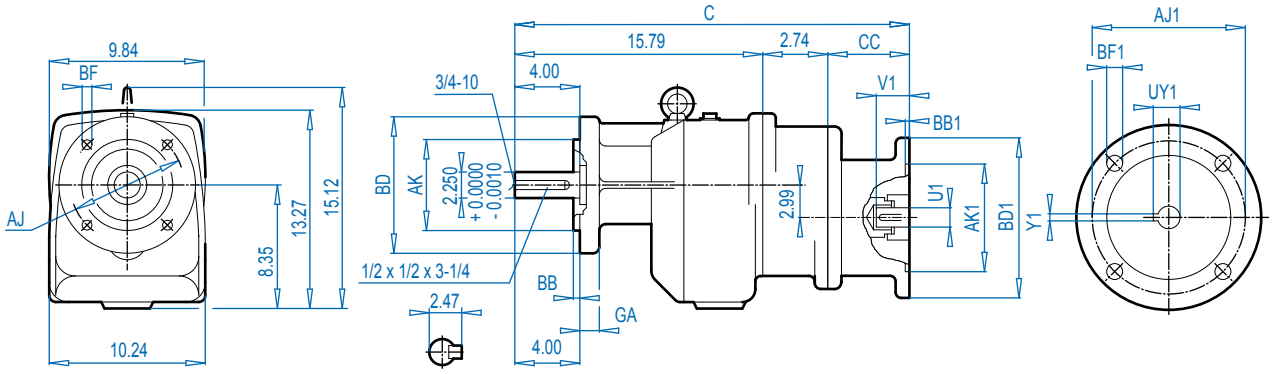


ALTERNATE SHAFTS SEE PAGE 239

### Mounting Flange

| BD (mm) | AJ | AK | BB | BF | GA |
|---|---|---|---|---|---|
| 9.84 (250) | 8.46 | 7.087 $^{+0.0005}_{-0.0004}$ | 0.16 | 0.55 | 0.63 |
| 11.81 (300) | 10.43 | 9.055 $^{+0.0006}_{-0.0005}$ | 0.16 | 0.55 | 0.79 |

### NEMA Dimensions

| Type | AJ1 | AK1 | BB1 | BD1 | BF1 | U1 | V1 | UY1 | Y1 | C | CC |
|---|---|---|---|---|---|---|---|---|---|---|---|
| **56C** | 5.88 | 4.500 | 0.18 | 6.54 | 0.43 | 0.625 | 2.06 | 0.71 | 0.188 | 23.13 | 4.61 |
| **140TC** | 5.88 | 4.500 | 0.18 | 6.54 | 0.43 | 0.875 | 2.12 | 0.96 | 0.188 | 23.13 | 4.61 |
| **180TC** | 7.25 | 8.500 | 0.23 | 9.17 | 0.59 | 1.125 | 2.62 | 1.24 | 0.250 | 25.17 | 6.65 |


Send Quote Requests to info@automatedpt.com
Call +1(800)985-6929 To Order or Order Online At Nordgearmotors.com

# SK 53 - W
# SK 53F - W

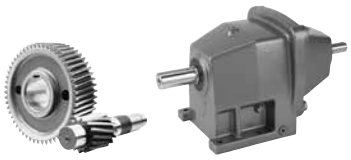

DRIVESYSTEMS



## SK 53

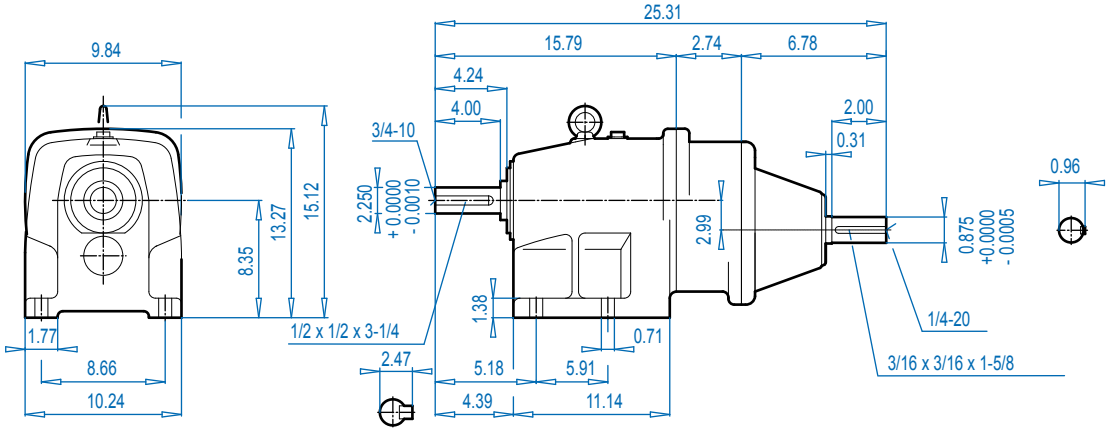


## SK 53F

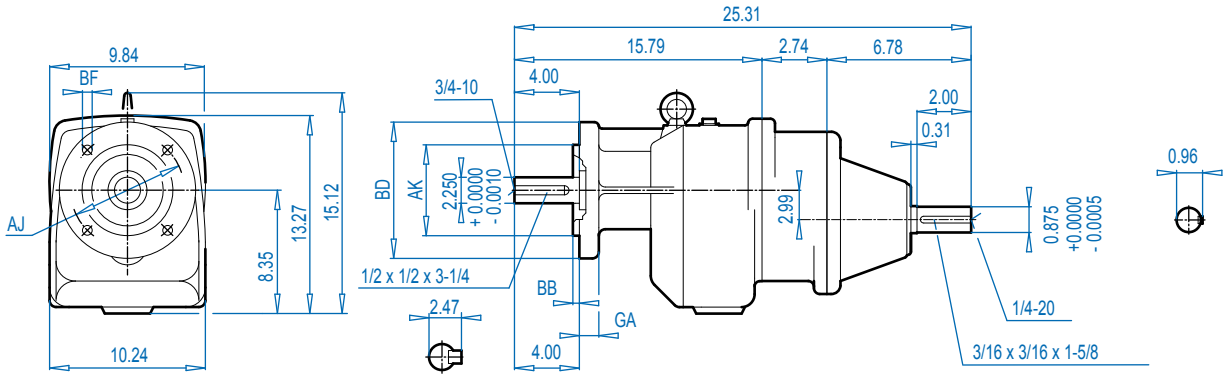


ALTERNATE SHAFTS SEE PAGE 239

### Mounting Flange

| BD (mm) | AJ | AK | BB | BF | GA |
|---|---|---|---|---|---|
| 9.84 (250) | 8.46 | 7.087 $^{+0.0005}_{-0.0004}$ | 0.16 | 0.55 | 0.63 |
| 11.81 (300) | 10.43 | 9.055 $^{+0.0006}_{-0.0005}$ | 0.16 | 0.55 | 0.79 |


Send Quote Requests to info@automatedpt.com
Call +1(800)985-6929 To Order or Order Online At Nordgearmotors.com

DRIVESYSTEMS



# SK 62 + Motor
# SK 62F + Motor



## SK 62

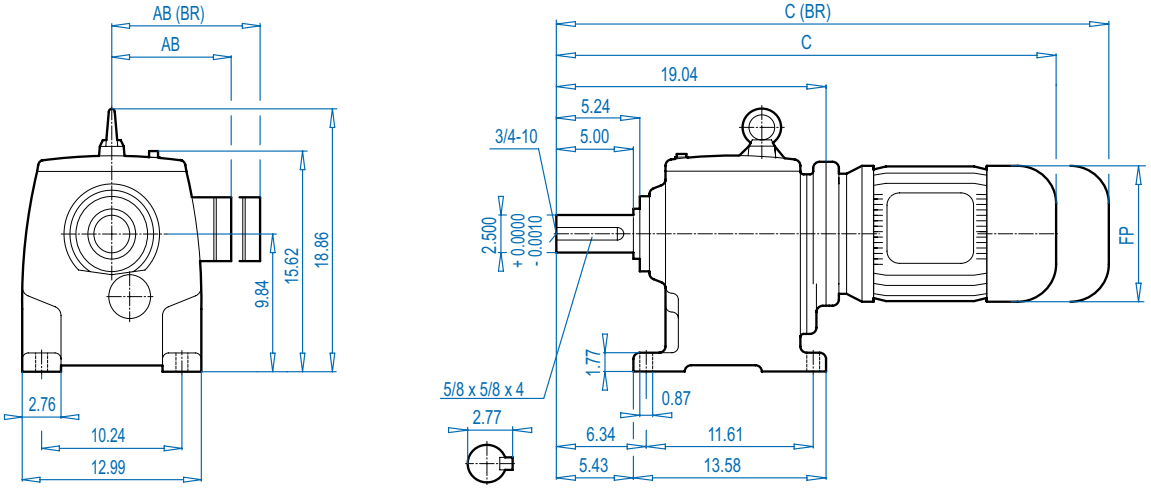


## SK 62F

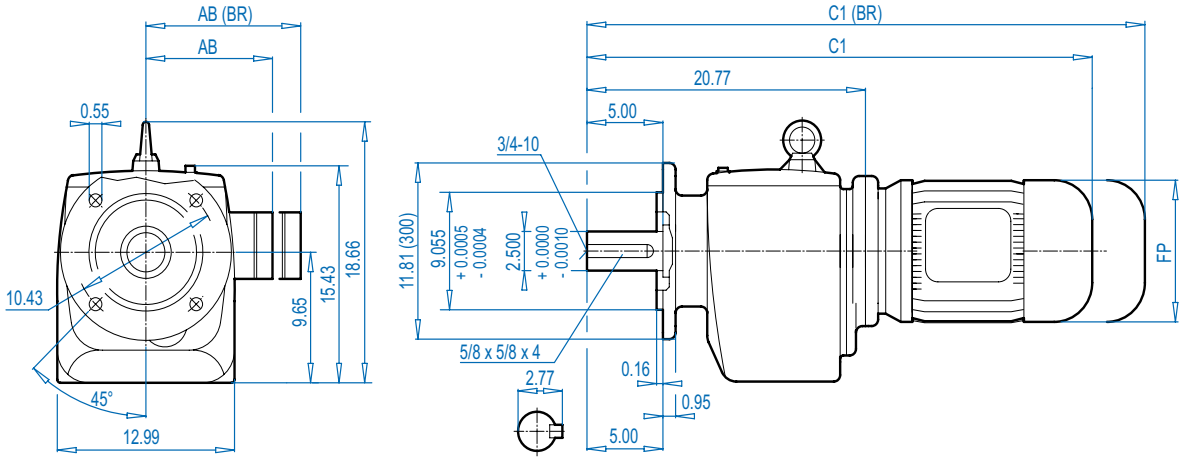


ALTERNATE SHAFTS SEE PAGE 239

### Motor Dimensions

| Standard eff. | 132S/M | 160M/L | | 180MX/LX | | 200L | 225S/M | | For Other Connection Possibilities please see ⇨ 237 |
|---|---|---|---|---|---|---|---|---|---|
| Energy eff. | 132SH/MH | 160MH | 160LH | | 180MH/LH | 200LH | | 225SH/MH | |
| AB | 8.03 | 8.90 | 8.90 | 8.90 | 10.20 | 12.05 | 12.05 | 12.80 | |
| AB (BR) | 7.72 | 8.90 | 8.90 | 8.90 | 10.20 | 12.05 | 12.05 | - | |
| C | 36.19 | 37.88 | 39.45 | 39.45 | 42.76 | 46.15 | 46.15 | 46.03 | |
| C (BR) | 40.40 | 44.45 | 46.18 | 46.18 | 46.89 | 52.72 | 52.72 | - | |
| C1 | 37.91 | 39.61 | 41.18 | 41.18 | 44.49 | 47.88 | 47.88 | 47.76 | |
| C1 (BR) | 42.13 | 46.18 | 47.91 | 47.91 | 48.62 | 54.45 | 54.45 | - | |
| FP | 10.47 | 12.60 | 12.60 | 12.60 | 14.09 | 15.67 | 15.67 | 17.52 | |



**(BR)** denotes Brakemotor


Send Quote Requests to info@automatedpt.com
Call +1(800)985-6929 To Order or Order Online At Nordgearmotors.com

# SK 62 + NEMA
# SK 62F + NEMA

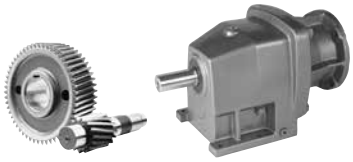



## SK 62

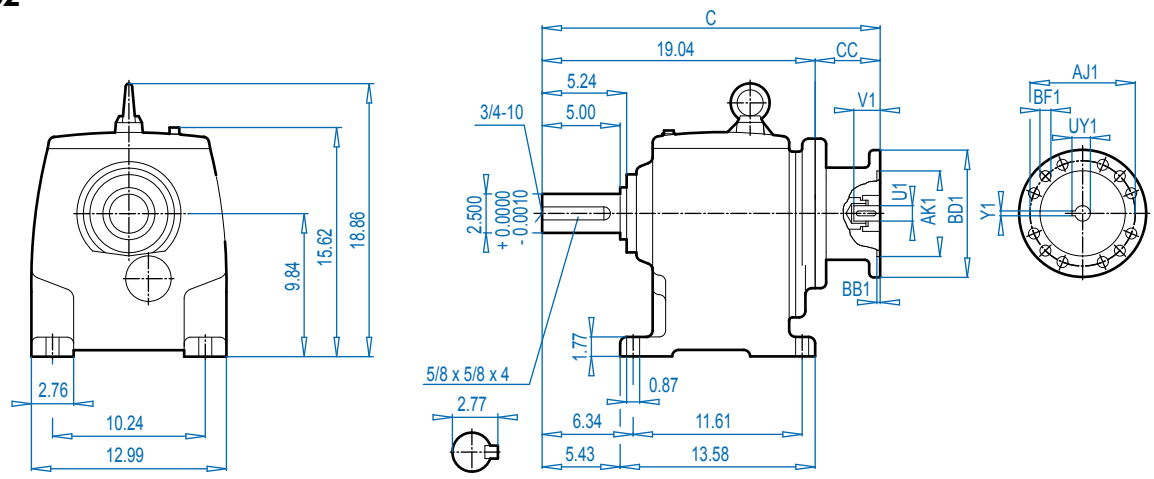


## SK 62F

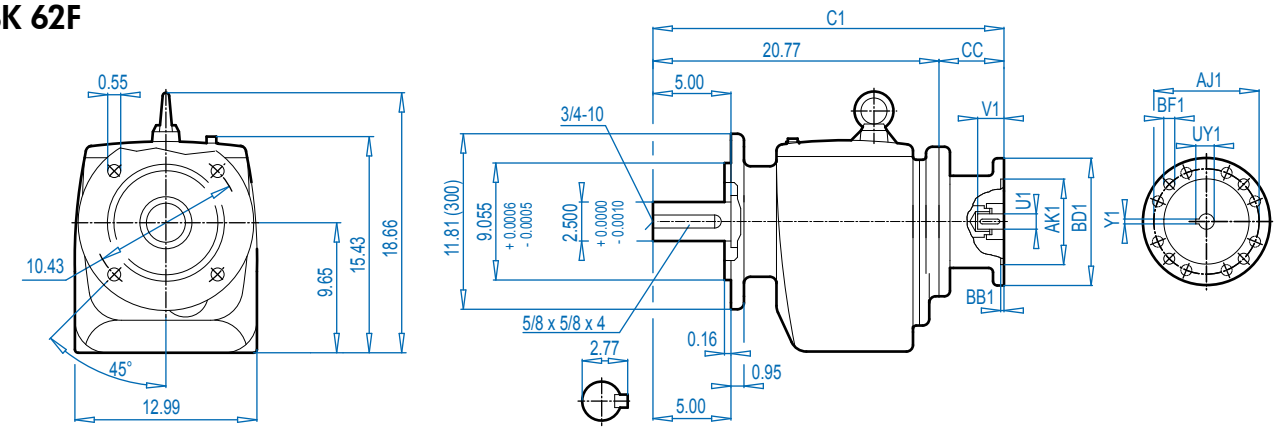


### NEMA Dimensions

| Type | AJ1 | AK1 | BB1 | BD1 | BF1 | U1 | V1 | UY1 | Y1 | C | C1 | CC |
|---|---|---|---|---|---|---|---|---|---|---|---|---|
| 180TC | 7.25 | 8.500 | 0.23 | 9.17 | 0.59 | 1.125 | 2.62 | 1.24 | 0.250 | 26.56 | 28.31 | 7.52 |
| 210TC | 7.25 | 8.500 | 0.39 | 9.17 | 0.59 | 1.375 | 3.12 | 1.52 | 0.312 | 26.56 | 28.31 | 7.52 |
| 250TC | 7.25 | 8.500 | 0.23 | 9.17 | 0.59 | 1.625 | 3.75 | 1.80 | 0.375 | 30.41 | 32.17 | 11.38 |
| 280TC | 9.00 | 10.500 | 0.23 | 13.78 | 0.59 | 1.875 | 4.38 | 2.03 | 0.500 | 30.41 | 32.17 | 11.38 |
| 320TC | 11.00 | 12.500 | 0.23 | 13.78 | 0.71 | 2.125 | 5.00 | 2.35 | 0.500 | 29.39 | 31.14 | 10.35 |
| 360TC | 11.00 | 12.500 | 0.16 | 17.72 | 0.71 | 2.375 | 5.62 | 2.65 | 0.625 | 32.30 | 34.49 | 13.27 |


Send Quote Requests to info@automatedpt.com
Call +1(800)985-6929 To Order or Order Online At Nordgearmotors.com

DRIVESYSTEMS

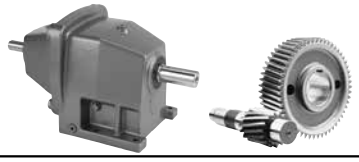

# SK 62 - W
# SK 62F - W



## SK 62

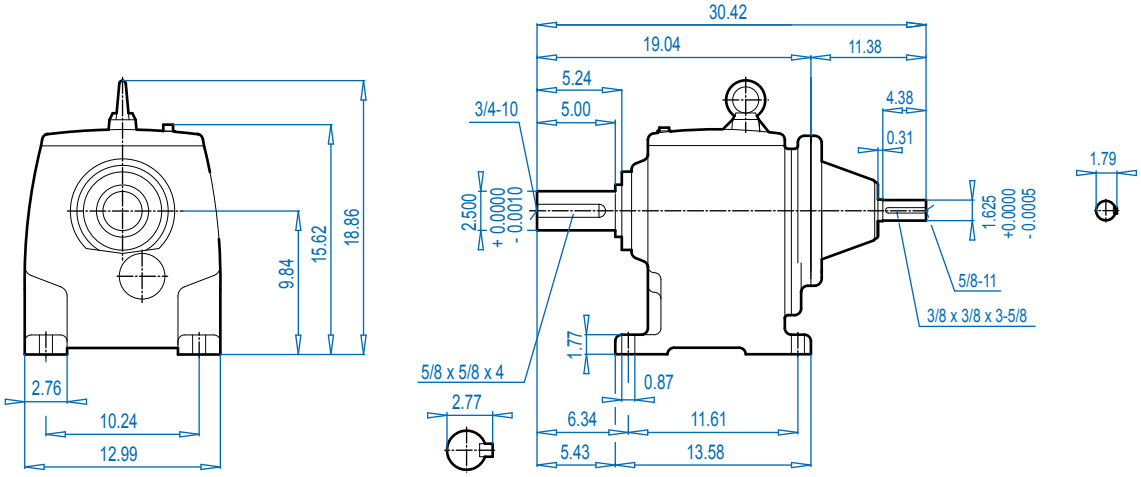


## SK 62F

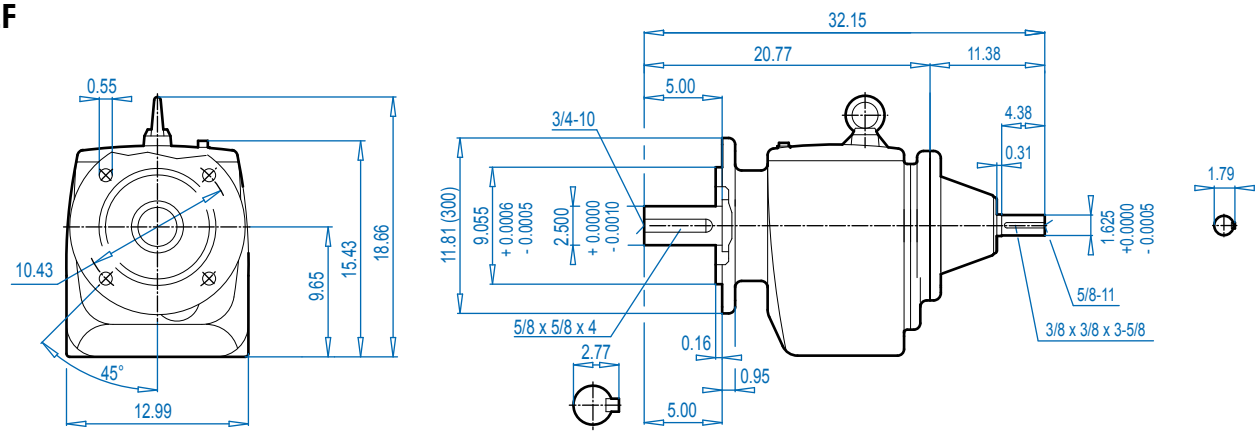


ALTERNATE SHAFTS SEE PAGE 239


Send Quote Requests to info@automatedpt.com
Call +1(800)985-6929 To Order or Order Online At Nordgearmotors.com

# SK 63 + Motor
# SK 63F + Motor

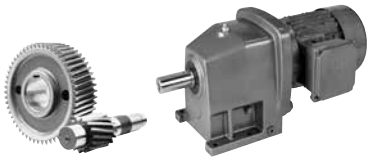

DRIVESYSTEMS



## SK 63

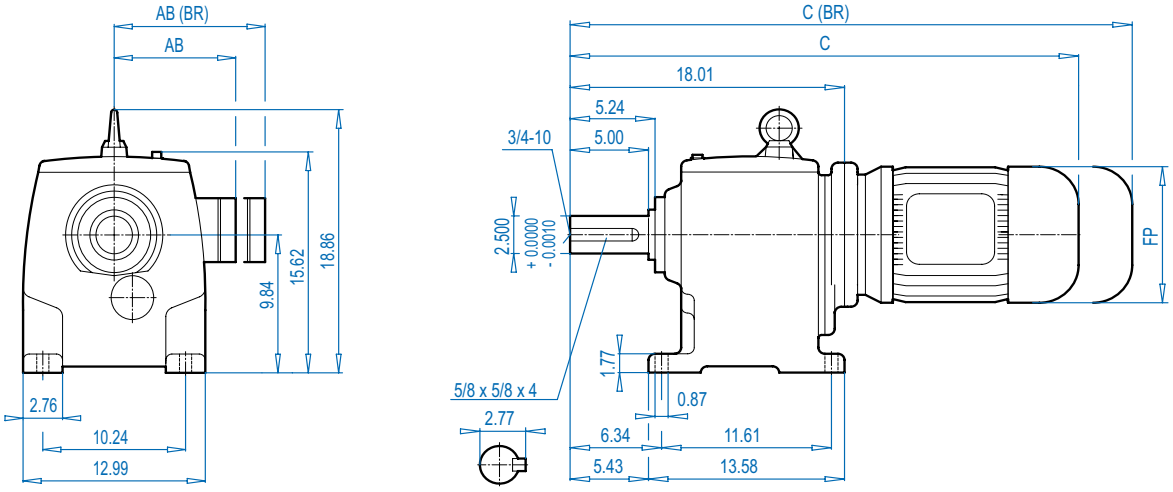


## SK 63F

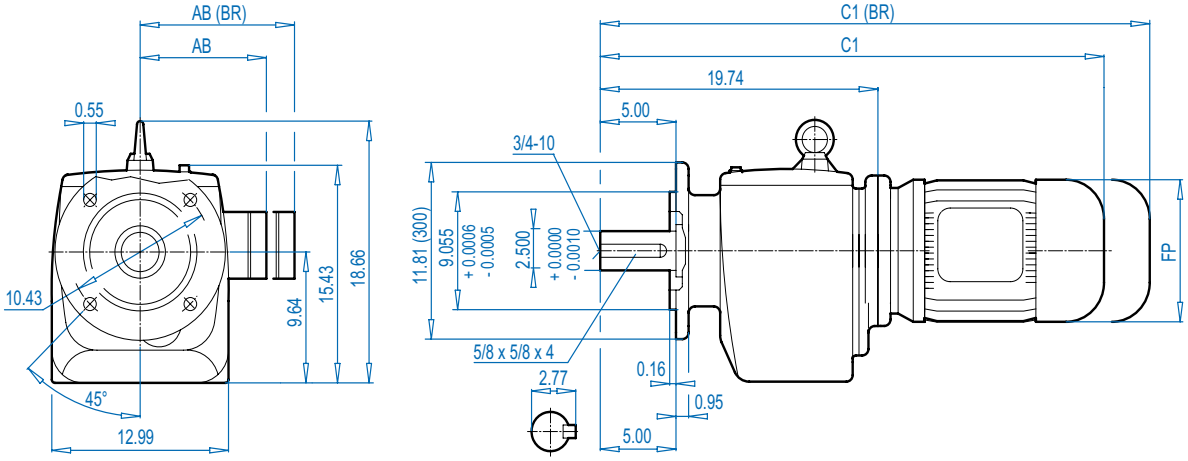


### Motor Dimensions

| Standard eff. | 90S/L | 100L | 112M | 132S/M | 160M/L | | 180MX/LX | | For Other Connection Possibilities please see ⇨🕮 237 |
|---|---|---|---|---|---|---|---|---|---|
| Energy eff. | 90SH/LH | 100LH | | 132SH/MH | 160MH | 160LH | | 180MH/LH | |
| AB | 5.79 | 6.65 | 7.05 | 8.03 | 8.90 | 8.90 | 8.90 | 10.20 | |
| AB (BR) | 5.83 | 6.26 | 6.69 | 7.72 | 8.90 | 8.90 | 8.90 | 10.20 | |
| C | 28.90 | 30.08 | 30.99 | 34.37 | 36.85 | 38.43 | 38.43 | 42.52 | |
| C (BR) | 31.85 | 33.67 | 34.65 | 38.59 | 43.43 | 45.16 | 45.16 | 46.66 | |
| C1 | 30.63 | 31.81 | 32.72 | 36.10 | 38.58 | 40.16 | 40.16 | 44.25 | |
| C1 (BR | 33.58 | 35.39 | 36.38 | 38.58 | 45.16 | 46.89 | 46.89 | 48.39 | |
| FP | 6.92 | 7.63 | 8.58 | 10.16 | 12.60 | 12.60 | 12.60 | 14.09 | |



**(BR)** denotes Brakemotor


Send Quote Requests to info@automatedpt.com
Call +1(800)985-6929 To Order or Order Online At Nordgearmotors.com

DRIVESYSTEMS

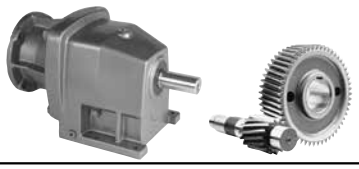

# SK 63 + NEMA
# SK 63F + NEMA



## SK 63

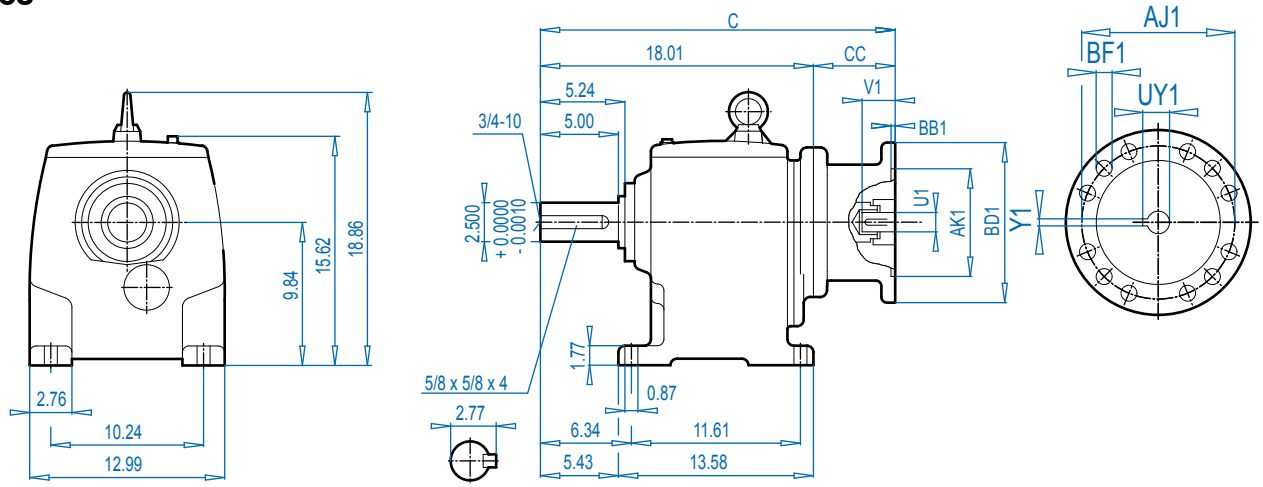


## SK 63F

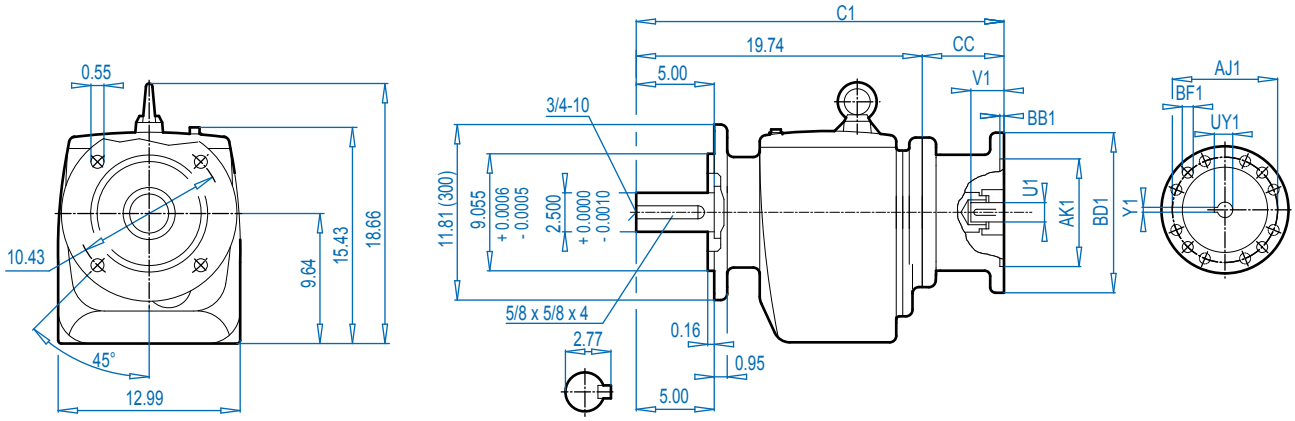


ALTERNATE SHAFTS SEE PAGE 239

**NEMA Dimensions**

| Type | AJ1 | AK1 | BB1 | BD1 | BF1 | U1 | V1 | UY1 | Y1 | C | C1 | CC |
|---|---|---|---|---|---|---|---|---|---|---|---|---|
| **56C** | 5.88 | 4.500 | 0.18 | 6.54 | 0.43 | 0.625 | 2.06 | 0.71 | 0.188 | 22.34 | 24.07 | 4.33 |
| **140TC** | 5.88 | 4.500 | 0.18 | 6.54 | 0.43 | 0.875 | 2.12 | 0.96 | 0.188 | 22.34 | 24.07 | 4.33 |
| **180TC** | 7.25 | 8.500 | 0.23 | 9.17 | 0.59 | 1.125 | 2.62 | 1.24 | 0.250 | 25.93 | 27.65 | 7.91 |
| **210TC** | 7.25 | 8.500 | 0.39 | 9.17 | 0.59 | 1.375 | 3.12 | 1.52 | 0.312 | 25.93 | 27.65 | 7.91 |
| **250TC** | 7.25 | 8.500 | 0.23 | 9.17 | 0.59 | 1.625 | 3.75 | 1.80 | 0.375 | 25.93 | 27.65 | 7.91 |
| **280TC** | 9.00 | 10.500 | 0.23 | 13.78 | 0.59 | 1.875 | 4.38 | 2.03 | 0.500 | 28.28 | 28.28 | 8.54 |


Send Quote Requests to info@automatedpt.com
Call +1(800)985-6929 To Order or Order Online At Nordgearmotors.com

Send Quote Requests to info@automatedpt.com
Call +1(800)985-6929 To Order or Order Online At Nordgearmotors.com

# SK 63 - W
# SK 63F - W

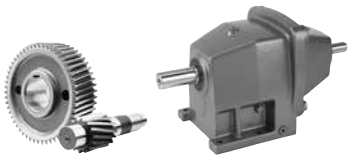

DRIVESYSTEMS



## SK 63

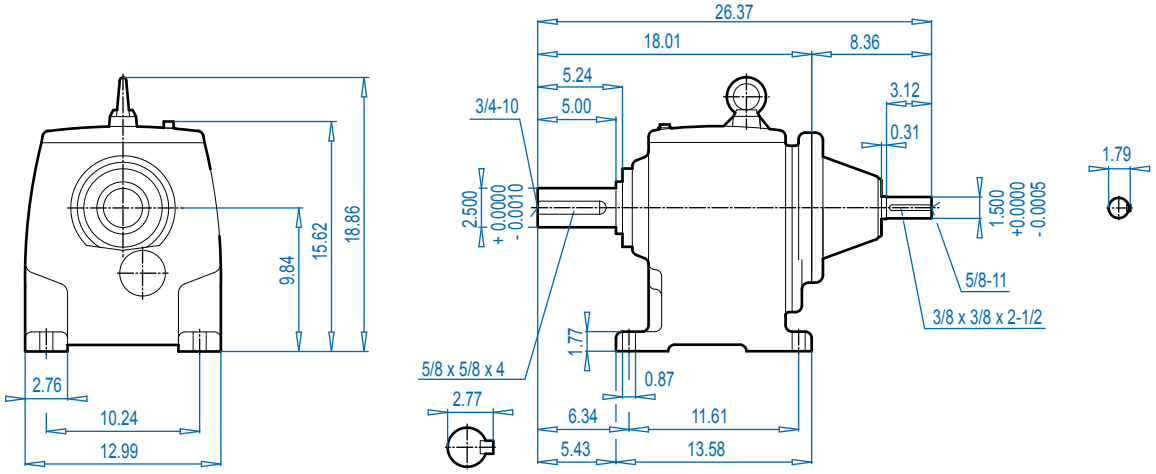


## SK 63F

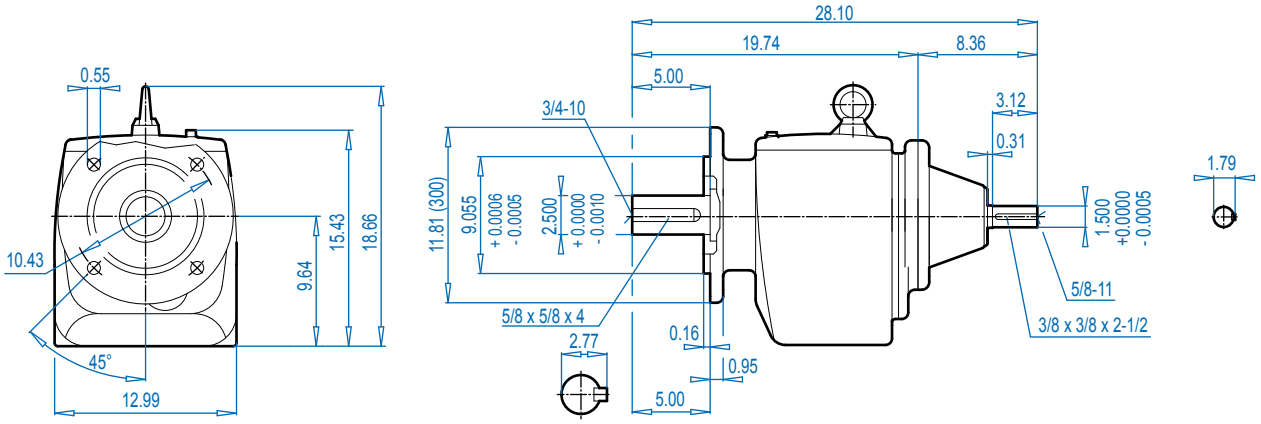


ALTERNATE SHAFTS SEE PAGE 239


Send Quote Requests to info@automatedpt.com
Call +1(800)985-6929 To Order or Order Online At Nordgearmotors.com

Send Quote Requests to info@automatedpt.com
Call +1(800)985-6929 To Order or Order Online At Nordgearmotors.com



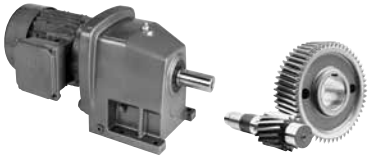

# SK 72 + Motor
# SK 72F + Motor



## SK 72

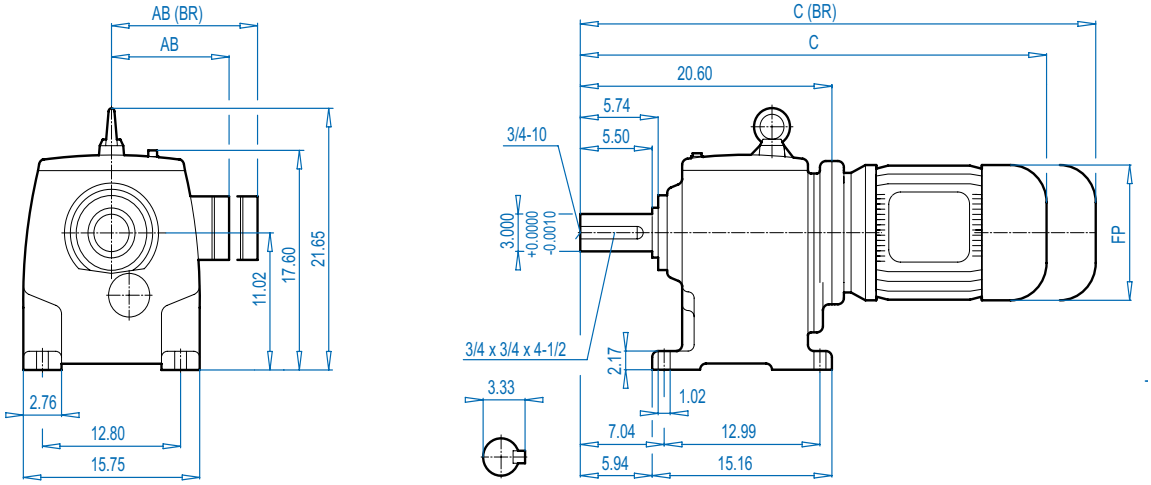


## SK 72F

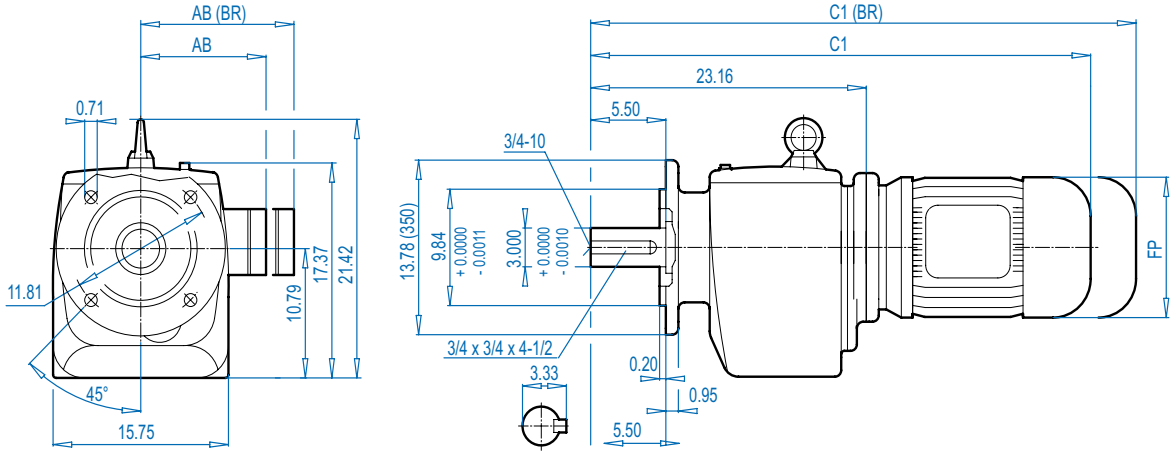


ALTERNATE SHAFTS SEE PAGE 239

### Motor Dimensions

| Standard efficiency | 160M/L | | 180MX/LX | | 200L | 225S/M | | For Other Connection Possibilities please see ⇨🕮 237 |
|---|---|---|---|---|---|---|---|---|
| Energy efficiency | 160MH | 160LH | | 180MH/LH | 200LH | | 225SH/MH | |
| AB | 8.90 | 8.90 | 8.90 | 10.20 | 12.05 | 12.05 | 12.80 | |
| AB (BR) | 8.90 | 8.90 | 8.90 | 10.20 | 12.05 | 12.05 | - | |
| C | 39.44 | 41.02 | 41.02 | 44.32 | 47.71 | 47.71 | 47.59 | |
| C (BR) | 46.02 | 47.75 | 47.75 | 48.46 | 54.28 | 54.28 | - | |
| C1 | 42.00 | 43.57 | 43.57 | 46.88 | 50.27 | 50.27 | 50.15 | |
| C1 (BR | 48.57 | 50.30 | 50.30 | 51.01 | 56.84 | 56.84 | - | |
| FP | 12.60 | 12.60 | 12.60 | 14.09 | 15.67 | 15.67 | 17.52 | |

**(BR)** denotes Brakemotor



Send Quote Requests to info@automatedpt.com
Call +1(800)985-6929 To Order or Order Online At Nordgearmotors.com

Send Quote Requests to info@automatedpt.com
Call +1(800)985-6929 To Order or Order Online At Nordgearmotors.com

# SK 72 + NEMA
# SK 72F + NEMA

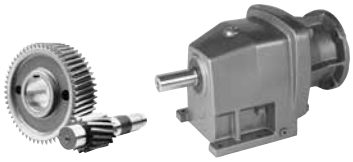



## SK 72

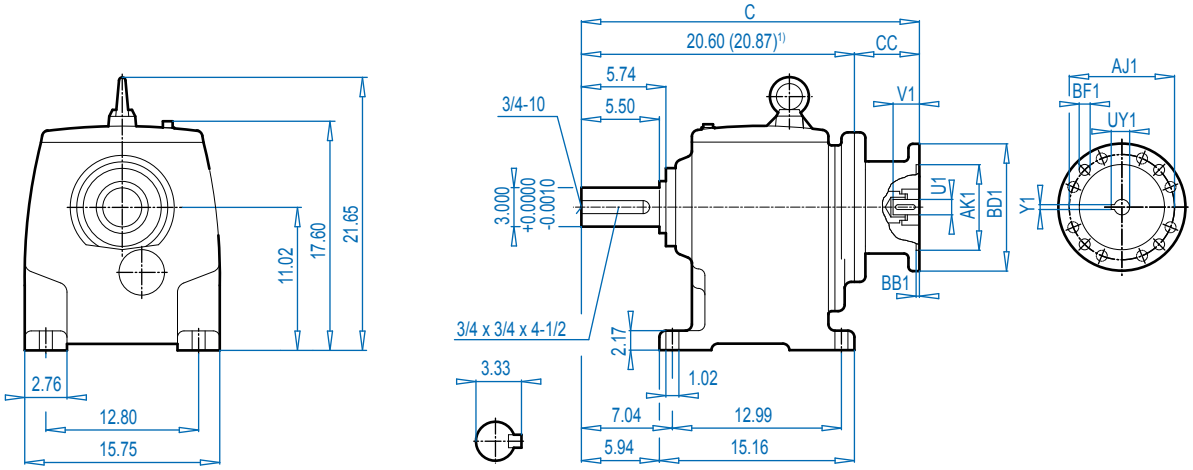


## SK 72F

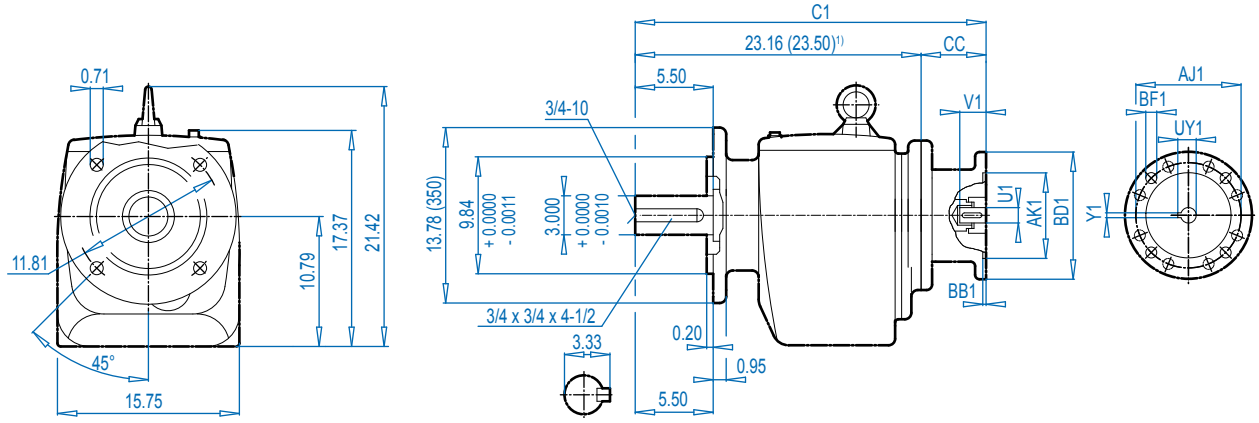


### NEMA Dimensions

| Type | AJ1 | AK1 | BB1 | BD1 | BF1 | U1 | V1 | UY1 | Y1 | C | C1 | CC |
|---|---|---|---|---|---|---|---|---|---|---|---|---|
| **180TC** | 7.25 | 8.500 | 0.23 | 9.17 | 0.59 | 1.125 | 2.62 | 1.24 | 0.250 | 28.19 | 30.70 | 7.52 |
| **210TC** | 7.25 | 8.500 | 0.39 | 9.17 | 0.59 | 1.375 | 3.12 | 1.52 | 0.312 | 28.19 | 30.70 | 7.52 |
| **250TC** | 7.25 | 8.500 | 0.23 | 9.17 | 0.59 | 1.625 | 3.75 | 1.80 | 0.375 | 31.98 | 34.56 | 11.38 |
| **280TC** | 9.00 | 10.500 | 0.23 | 13.78 | 0.59 | 1.875 | 4.38 | 2.03 | 0.500 | 31.98 | 34.56 | 11.38 |
| **320TC** | 11.00 | 12.500 | 0.23 | 13.78 | 0.71 | 2.125 | 5.00 | 2.35 | 0.500 | 30.95 | 33.53 | 10.35 |
| **360TC**1) | 11.00 | 12.500 | 0.16 | 17.72 | 0.71 | 2.375 | 5.62 | 2.65 | 0.625 | 33.87 | 36.45 | 13.27 |


Send Quote Requests to info@automatedpt.com
Call +1(800)985-6929 To Order or Order Online At Nordgearmotors.com

Send Quote Requests to info@automatedpt.com
Call +1(800)985-6929 To Order or Order Online At Nordgearmotors.com



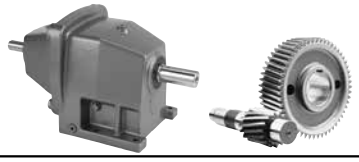

# SK 72 - W
# SK 72F - W



## SK 72

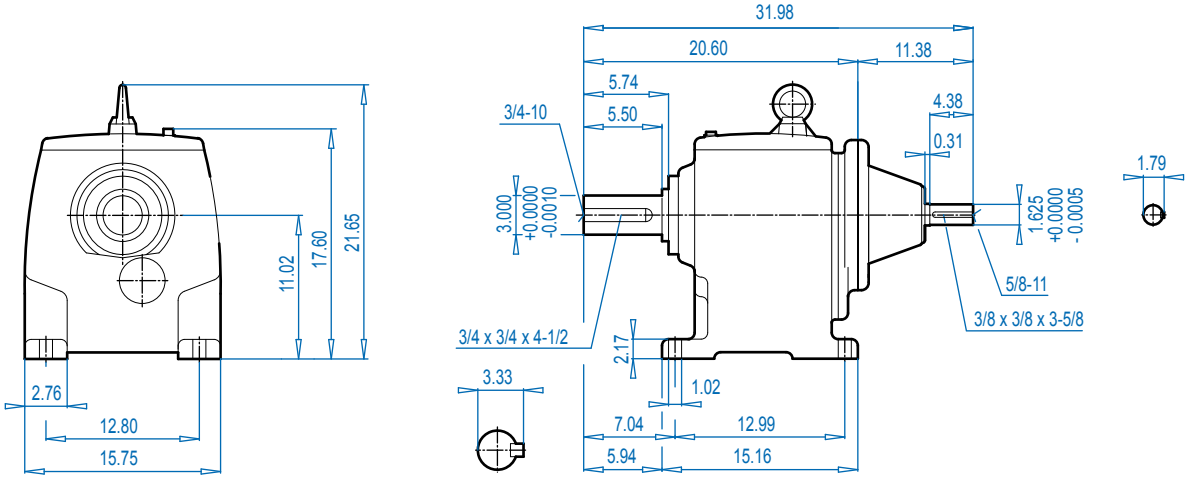


## SK 72F

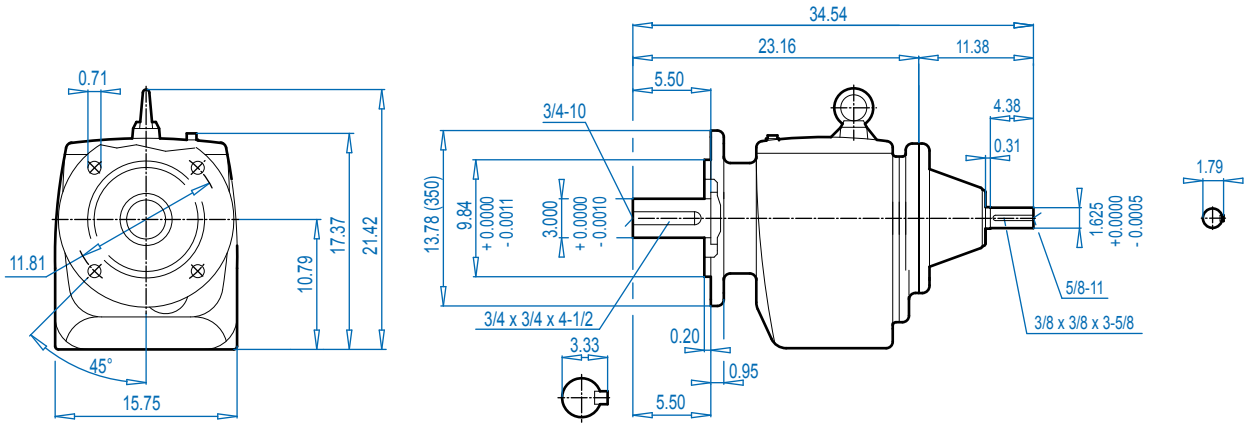


ALTERNATE SHAFTS SEE PAGE 239


Send Quote Requests to info@automatedpt.com
Call +1(800)985-6929 To Order or Order Online At Nordgearmotors.com

# SK 73 + Motor
# SK 73F + Motor

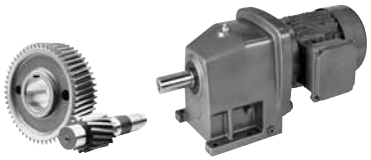

DRIVESYSTEMS



## SK 73

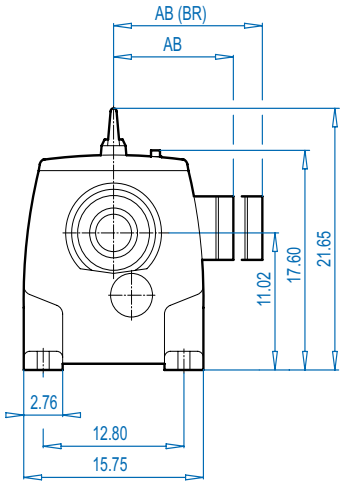


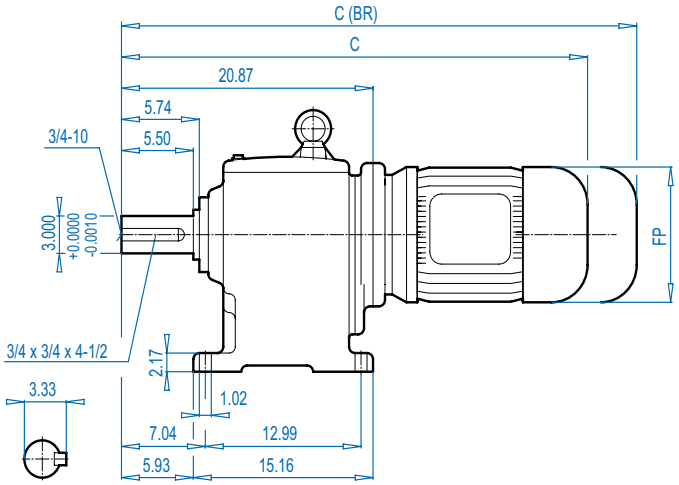


## SK 73F

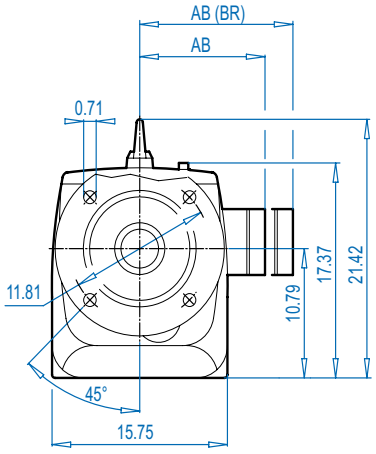


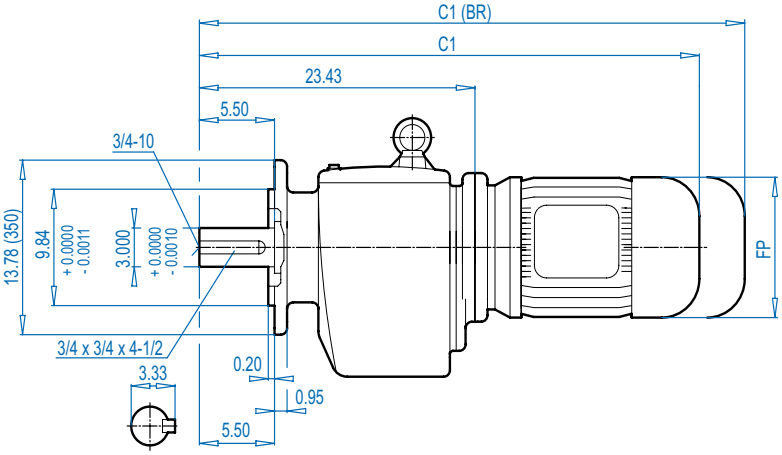


### Motor Dimensions

| Standard eff. | 100L | | 132S/M | 160M/L | | 180MX/LX | | 200L | 225S/M | | For Other Connection Possibilities please see ⇨📖 237 |
|---|---|---|---|---|---|---|---|---|---|---|---|
| Energy eff. | 100LH | 112MH | 132SH/MH | 160MH | 160LH | | 180MH/LH | 200LH | | 225SH/MH | |
| AB | 6.65 | 7.05 | 8.03 | 8.90 | 8.90 | 8.90 | 10.20 | 12.05 | 12.05 | 12.80 | |
| AB (BR) | 6.26 | 6.69 | 7.72 | 8.90 | 8.90 | 8.90 | 10.20 | 12.05 | 12.05 | - | |
| C | 30.08 | 31.05 | 34.37 | 36.85 | 38.43 | 38.43 | 42.52 | 47.98 | 47.98 | 47.86 | |
| C (BR) | 33.67 | 34.64 | 38.59 | 43.43 | 45.16 | 45.16 | 46.66 | 54.56 | 54.56 | - | |
| C1 | 35.50 | 36.29 | 40.58 | 42.27 | 43.85 | 43.85 | 47.15 | 50.54 | 50.54 | 50.42 | |
| C1 (BR) | 39.08 | 39.95 | 44.79 | 48.85 | 50.58 | 50.58 | 51.29 | 57.11 | 57.11 | - | |
| FP | 7.63 | 8.58 | 10.16 | 12.60 | 12.60 | 12.60 | 14.09 | 15.67 | 15.67 | 17.52 | |



**(BR)** denotes Brakemotor


Send Quote Requests to info@automatedpt.com
Call +1(800)985-6929 To Order or Order Online At Nordgearmotors.com

Send Quote Requests to info@automatedpt.com
Call +1(800)985-6929 To Order or Order Online At Nordgearmotors.com

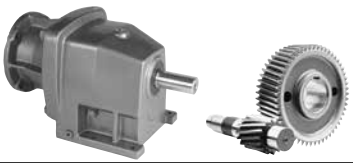

# SK 73 + NEMA
# SK 73F + NEMA



## SK 73

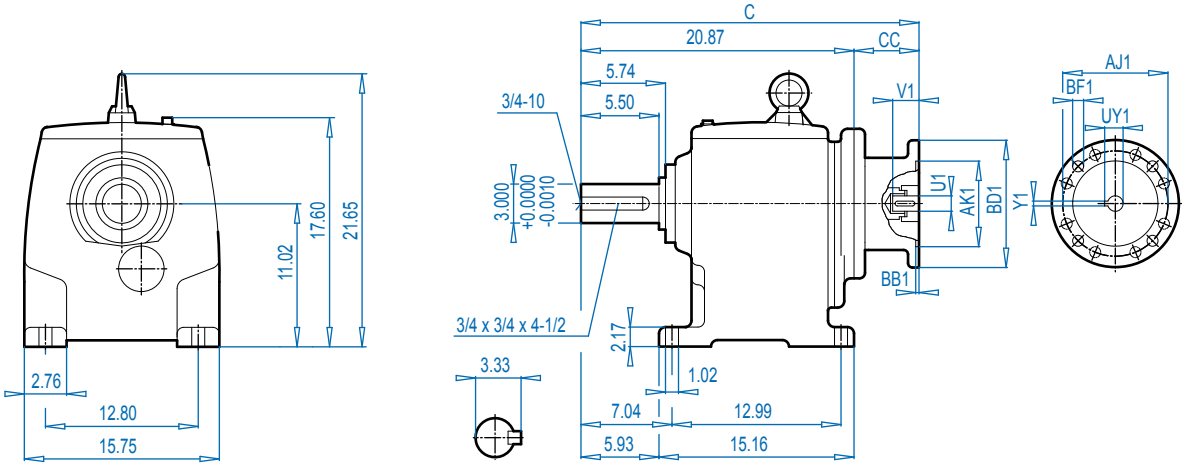


## SK 73F

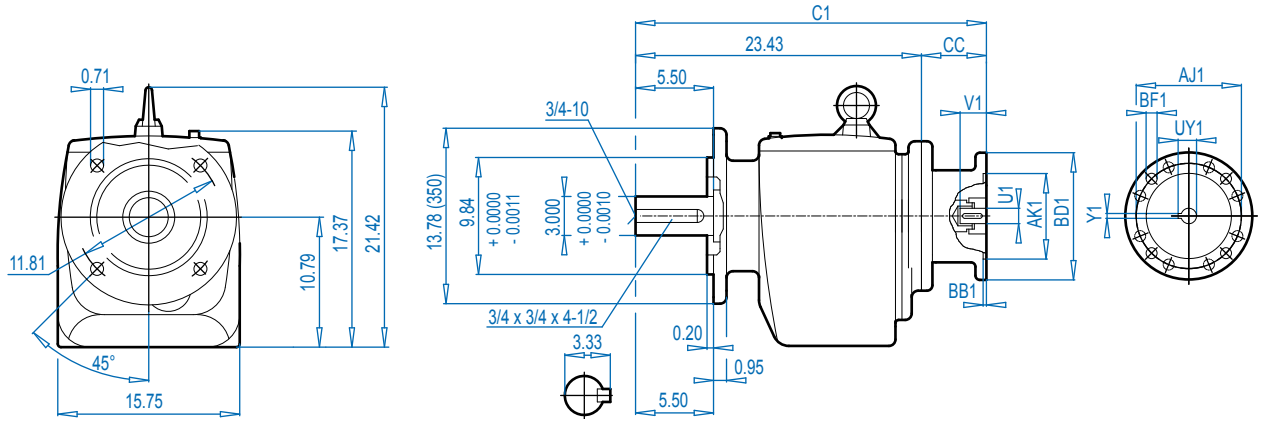


ALTERNATE SHAFTS SEE PAGE 239

### NEMA Dimensions

| Type | AJ1 | AK1 | BB1 | BD1 | BF1 | U1 | V1 | UY1 | Y1 | C | C1 | CC |
|---|---|---|---|---|---|---|---|---|---|---|---|---|
| **180TC** | 7.25 | 8.500 | 0.23 | 9.17 | 0.59 | 1.125 | 2.62 | 1.24 | 0.250 | 28.39 | 30.95 | 7.52 |
| **210TC** | 7.25 | 8.500 | 0.39 | 9.17 | 0.59 | 1.375 | 3.12 | 1.52 | 0.312 | 28.39 | 30.95 | 7.52 |
| **250TC** | 7.25 | 8.500 | 0.23 | 9.17 | 0.59 | 1.625 | 3.75 | 1.80 | 0.375 | 32.25 | 34.81 | 11.38 |
| **280TC** | 9.00 | 10.500 | 0.23 | 13.78 | 0.59 | 1.875 | 4.38 | 2.03 | 0.500 | 32.25 | 34.81 | 11.38 |
| **320TC** | 11.00 | 12.500 | 0.23 | 13.78 | 0.71 | 2.125 | 5.00 | 2.35 | 0.500 | 31.23 | 33.78 | 10.35 |
| **360TC** | 11.00 | 12.500 | 0.16 | 17.72 | 0.71 | 2.375 | 5.62 | 2.65 | 0.625 | 34.14 | 36.70 | 13.27 |


Send Quote Requests to info@automatedpt.com
Call +1(800)985-6929 To Order or Order Online At Nordgearmotors.com

Send Quote Requests to info@automatedpt.com
Call +1(800)985-6929 To Order or Order Online At Nordgearmotors.com

# SK 73 - W
# SK 73F - W

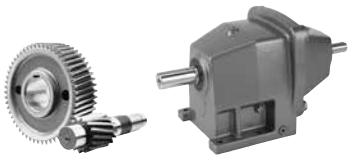

DRIVESYSTEMS



## SK 73

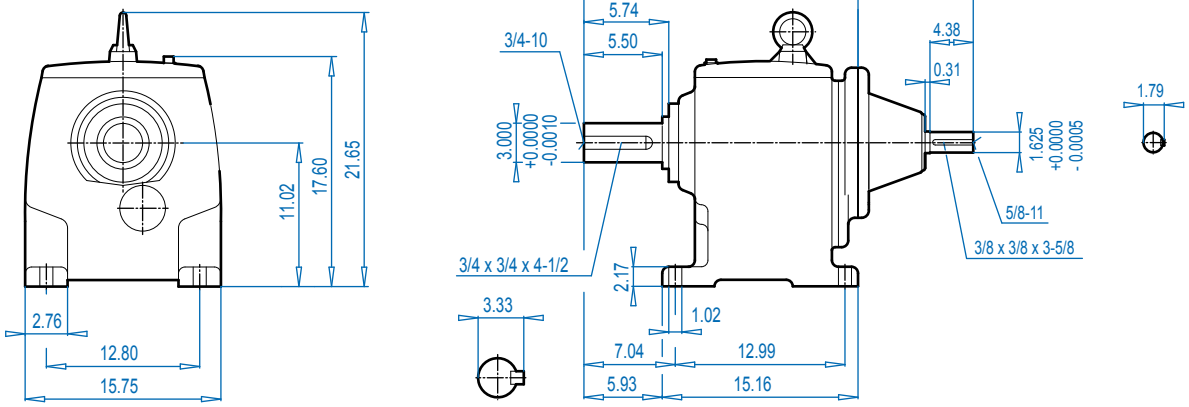


## SK 73F

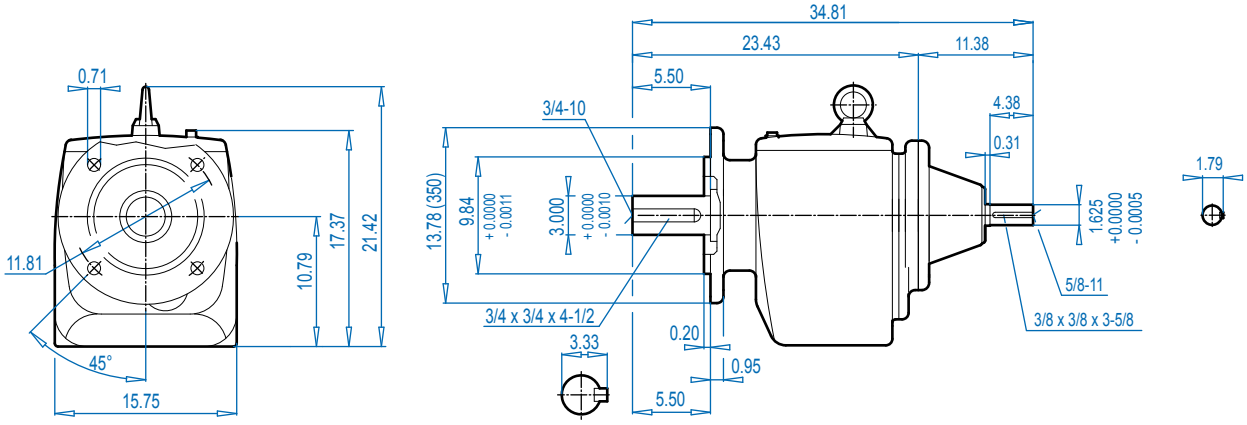


ALTERNATE SHAFTS SEE PAGE 239


Send Quote Requests to info@automatedpt.com
Call +1(800)985-6929 To Order or Order Online At Nordgearmotors.com

Send Quote Requests to info@automatedpt.com
Call +1(800)985-6929 To Order or Order Online At Nordgearmotors.com



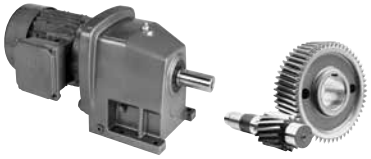

# SK 82 + Motor
# SK 82F + Motor



## SK 82

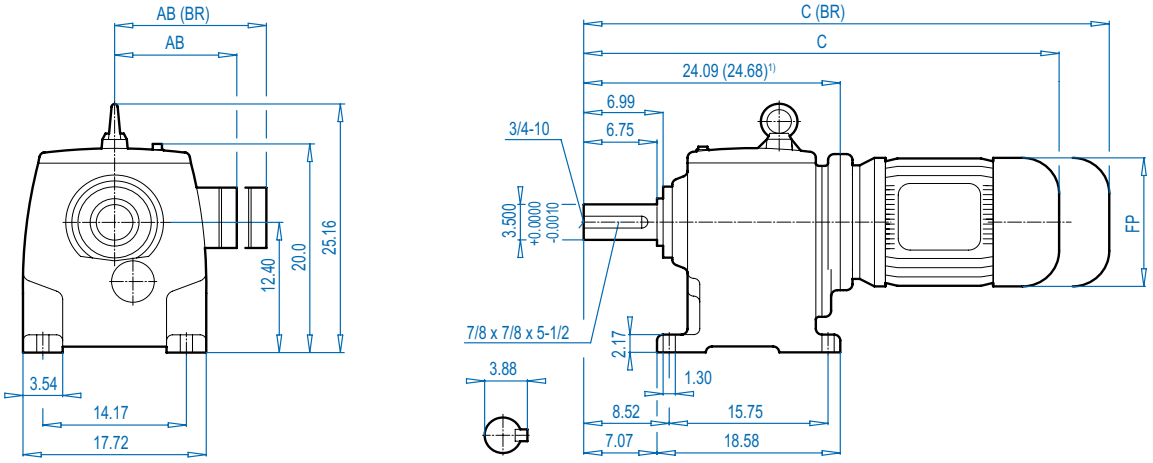


## SK 82F

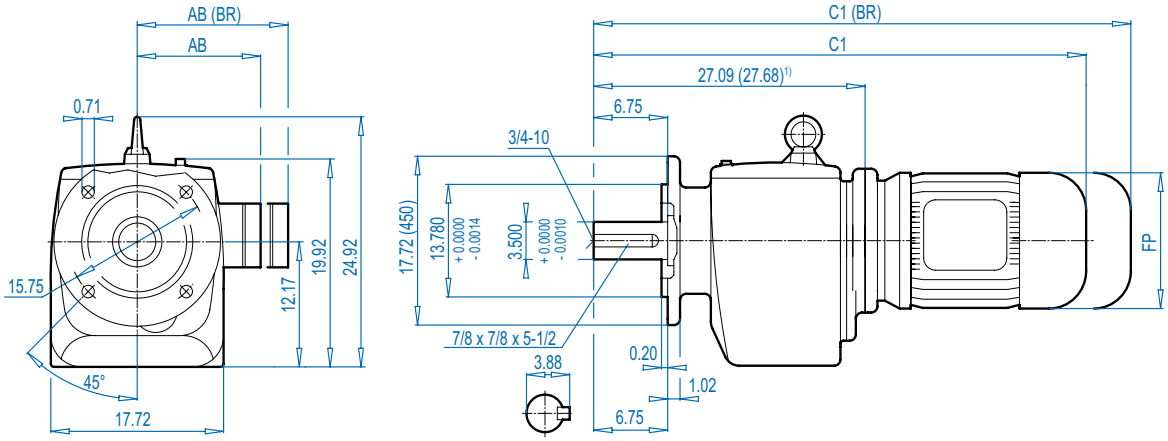


ALTERNATE SHAFTS SEE PAGE 239

**Motor Dimensions**

| Standard eff. | 160M/L | | 200L | 225S/M | | 250M1) | | 280S1) | For Other Connection Possibilities please see ⇨📖 237 |
|---|---|---|---|---|---|---|---|---|---|
| Energy eff. | 160MH | 160LH | 200LH | | 225SH/MH | | 250MH1) | 280SH1) | |
| AB | 8.90 | 8.90 | 12.05 | 12.05 | 12.80 | 15.43 | 15.43 | 17.91 |  |
| AB (BR) | 8.90 | 8.90 | 12.05 | 12.05 | - | 15.43 | 15.43 | 17.91 | |
| C | 42.90 | 44.47 | 51.17 | 51.17 | 51.05 | 54.63 | 57.39 | 58.77 | |
| C (BR) | 49.47 | 51.20 | 57.74 | 57.74 | - | 62.90 | 65.65 | 69.99 | |
| C1 | 45.88 | 47.46 | 54.15 | 54.15 | 54.03 | 57.61 | 60.37 | 61.75 | |
| C1 (BR) | 52.46 | 54.19 | 60.73 | 60.73 | - | 65.88 | 68.63 | 72.97 | |
| FP | 12.60 | 12.60 | 15.67 | 15.67 | 17.52 | 19.49 | 19.49 | 22.64 | |

**(BR)** denotes Brakemotor


Send Quote Requests to info@automatedpt.com
Call +1(800)985-6929 To Order or Order Online At Nordgearmotors.com

# SK 82 + NEMA
# SK 82F + NEMA

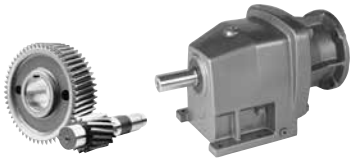



## SK 82

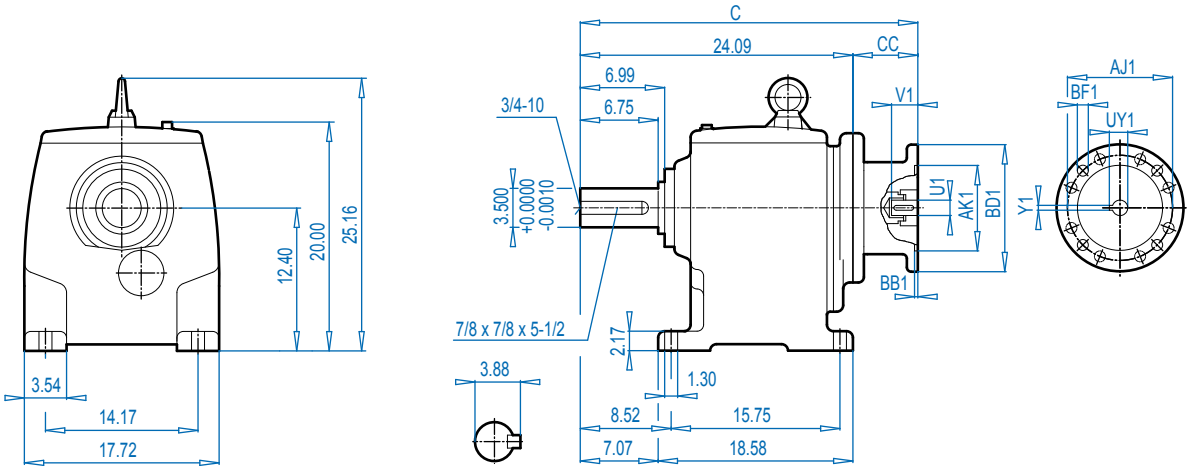


## SK 82F

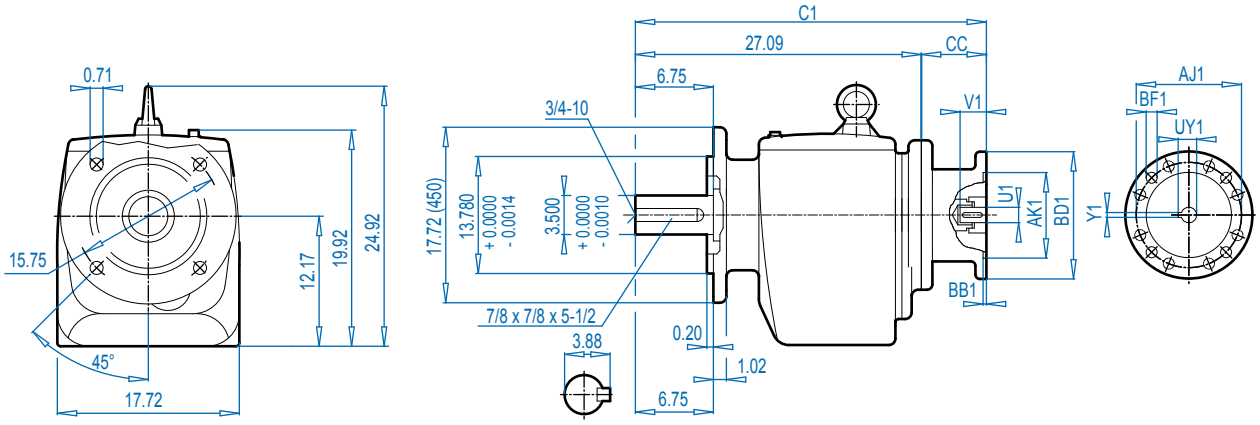


### NEMA Dimensions

| Type | AJ1 | AK1 | BB1 | BD1 | BF1 | U1 | V1 | UY1 | Y1 | C | C1 | CC |
|---|---|---|---|---|---|---|---|---|---|---|---|---|
| **180TC** | 7.25 | 8.500 | 0.23 | 9.17 | 0.59 | 1.125 | 2.62 | 1.24 | 0.250 | 31.61 | 34.58 | 7.52 |
| **210TC** | 7.25 | 8.500 | 0.39 | 9.17 | 0.59 | 1.375 | 3.12 | 1.52 | 0.312 | 31.61 | 34.58 | 7.52 |
| **250TC** | 7.25 | 8.500 | 0.23 | 9.17 | 0.59 | 1.625 | 3.75 | 1.80 | 0.375 | 35.47 | 38.44 | 11.38 |
| **280TC** | 9.00 | 10.500 | 0.23 | 13.78 | 0.59 | 1.875 | 4.38 | 2.03 | 0.500 | 35.47 | 38.44 | 11.38 |
| **320TC** | 11.00 | 12.500 | 0.23 | 13.78 | 0.71 | 2.125 | 5.00 | 2.35 | 0.500 | 34.45 | 37.41 | 10.35 |
| **360TC** | 11.00 | 12.500 | 0.16 | 21.65 | 0.71 | 2.375 | 5.62 | 2.65 | 0.625 | 37.97 | 40.35 | 13.29 |


Send Quote Requests to info@automatedpt.com
Call +1(800)985-6929 To Order or Order Online At Nordgearmotors.com

DRIVESYSTEMS

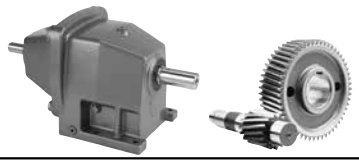

# SK 82 - W
# SK 82F - W



## SK 82

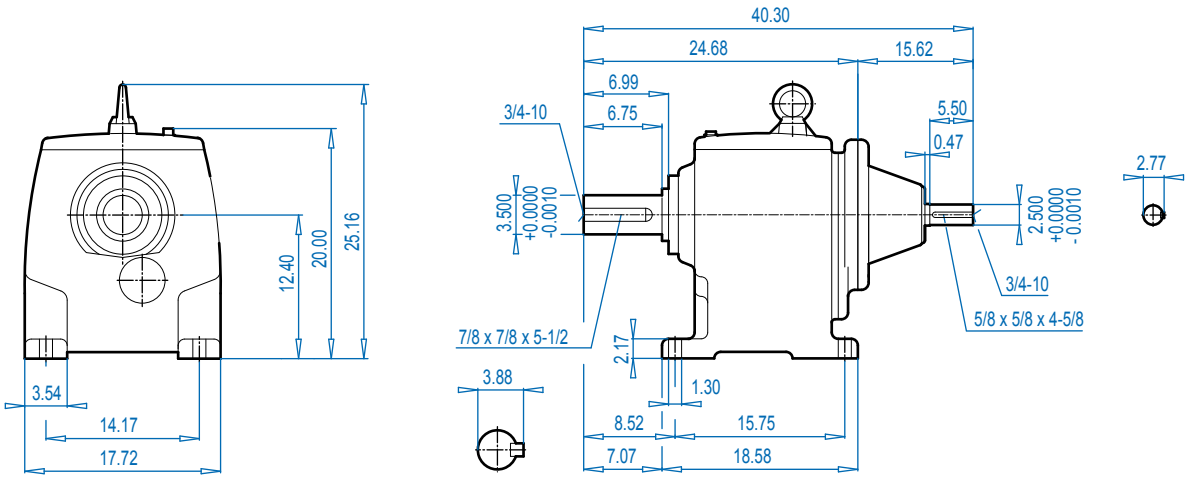


## SK 82F

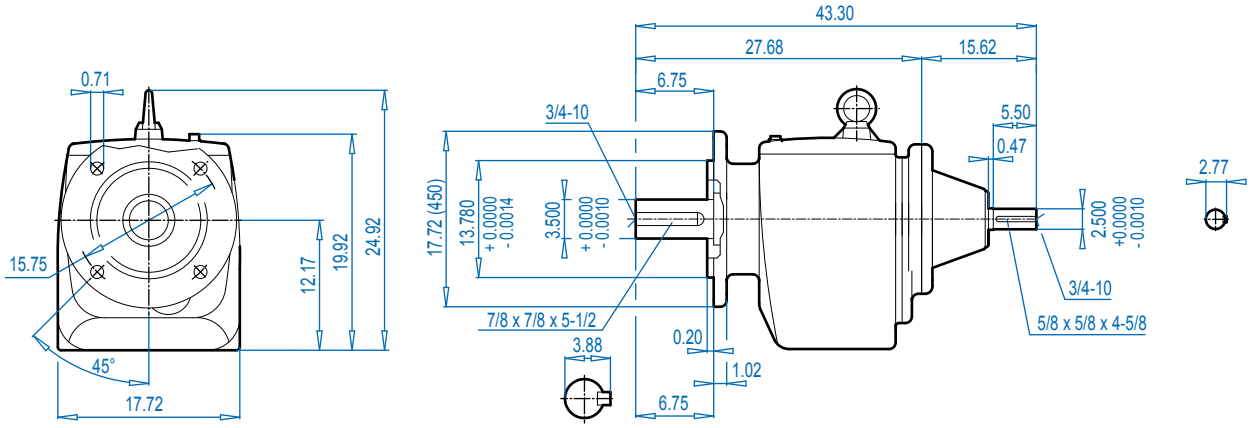


ALTERNATE SHAFTS SEE PAGE 239


Send Quote Requests to info@automatedpt.com
Call +1(800)985-6929 To Order or Order Online At Nordgearmotors.com

# SK 83 + Motor
# SK 83F + Motor

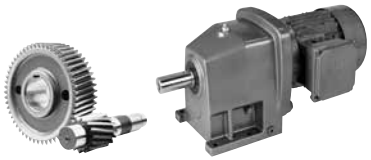

DRIVESYSTEMS



## SK 83

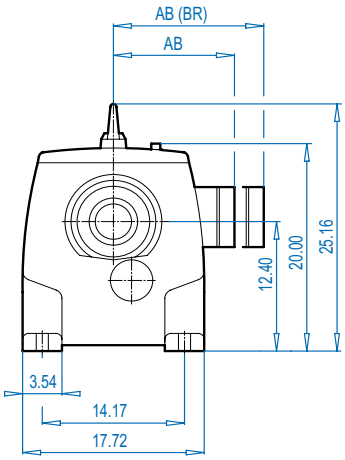


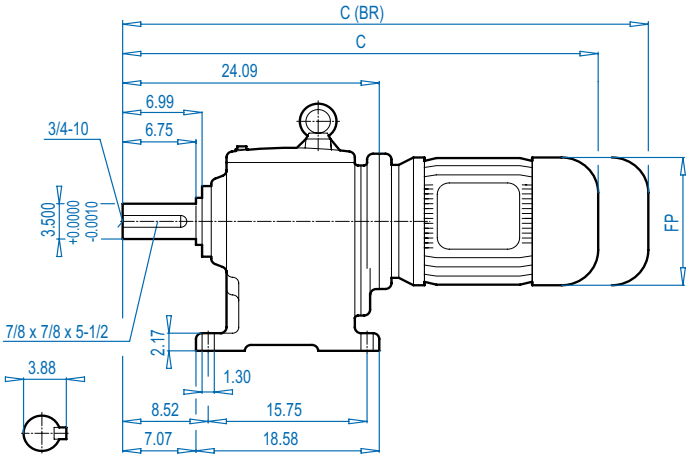


## SK 83F

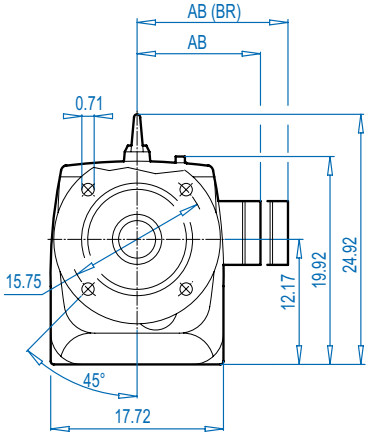


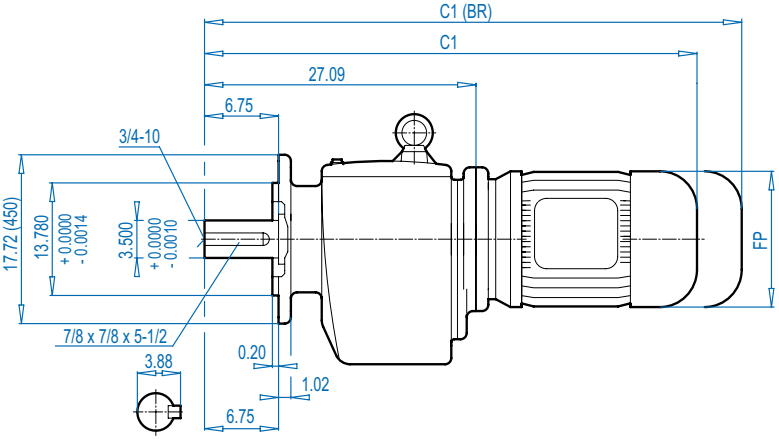


**Motor Dimensions**

| Standard eff. | 100 L | 112 M | | 132 S/M | 160 M/L | | 180 MX/LX | | 200 L | 225 S/M | | For Other Connection Possibilities please see ⇨🕮 237 |
|---|---|---|---|---|---|---|---|---|---|---|---|---|
| Energy eff. | 100 LH | | 112 MH | 132 SH/MH | 160 MH | 160 LH | | 180 MH/LH | 200 LH | | 225 SH/MH | |
| AB | 6.65 | 7.05 | 7.05 | 8.03 | 8.90 | 8.90 | 8.90 | 10.20 | 12.05 | 12.05 | 12.80 | |
| AB (BR) | 6.26 | 6.69 | 6.69 | 7.72 | 8.90 | 8.90 | 8.90 | 10.20 | 12.05 | 12.05 | - | |
| C | 36.16 | 36.95 | 37.92 | 41.24 | 42.93 | 44.51 | 44.51 | 47.82 | 51.21 | 51.21 | 51.09 | |
| C (BR) | 39.75 | 40.61 | 41.58 | 45.45 | 49.51 | 51.24 | 51.24 | 51.95 | 57.78 | 57.78 | - | |
| C1 | 39.15 | 39.94 | 40.91 | 44.23 | 45.92 | 47.50 | 47.50 | 50.81 | 54.19 | 54.19 | 54.07 | |
| C1 (BR) | 42.73 | 43.60 | 44.57 | 48.44 | 52.50 | 54.23 | 54.23 | 54.94 | 60.77 | 60.77 | - | |
| FP | 7.91 | 8.98 | 8.98 | 10.47 | 12.60 | 12.60 | 12.60 | 14.09 | 15.67 | 15.67 | 17.52 | |



**(BR) denotes Brakemotor**


Send Quote Requests to info@automatedpt.com
Call +1(800)985-6929 To Order or Order Online At Nordgearmotors.com

DRIVESYSTEMS

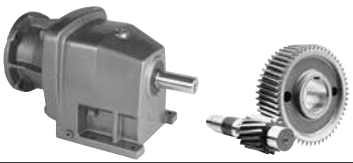

# SK 83 + NEMA
# SK 83F + NEMA



## SK 83

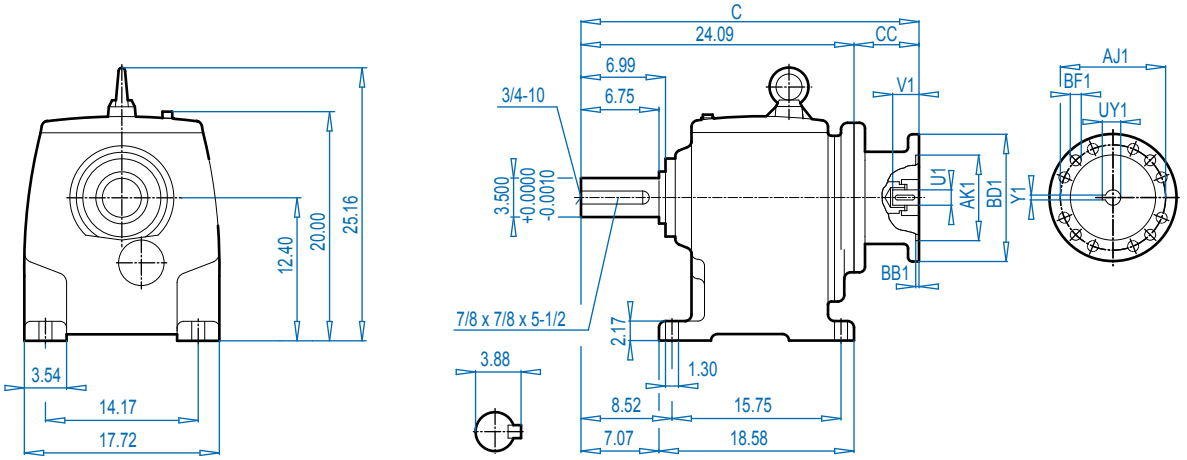


## SK 83F

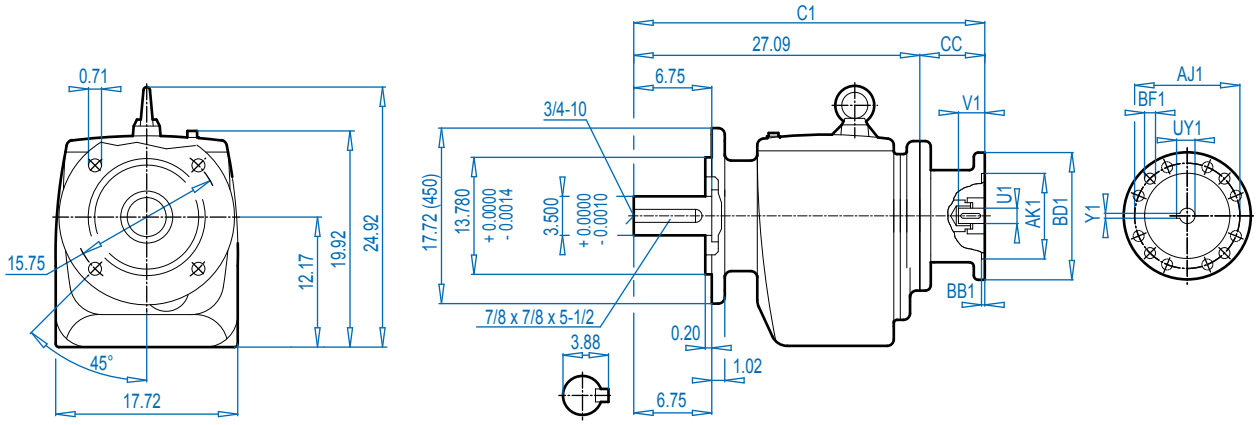


ALTERNATE SHAFTS SEE PAGE 239

**NEMA Dimensions**

| Type | AJ1 | AK1 | BB1 | BD1 | BF1 | U1 | V1 | UY1 | Y1 | C | C1 | CC |
|---|---|---|---|---|---|---|---|---|---|---|---|---|
| **180TC** | 7.25 | 8.500 | 0.23 | 9.17 | 0.59 | 1.125 | 2.62 | 1.24 | 0.250 | 31.61 | 34.61 | 7.52 |
| **210TC** | 7.25 | 8.500 | 0.39 | 9.17 | 0.59 | 1.375 | 3.12 | 1.52 | 0.312 | 31.61 | 34.61 | 7.52 |
| **250TC** | 7.25 | 8.500 | 0.23 | 9.17 | 0.59 | 1.625 | 3.75 | 1.80 | 0.375 | 35.47 | 38.47 | 11.38 |
| **280TC** | 9.00 | 10.500 | 0.23 | 13.78 | 0.59 | 1.875 | 4.38 | 2.03 | 0.500 | 35.47 | 38.47 | 11.38 |
| **320TC** | 11.00 | 12.500 | 0.23 | 13.78 | 0.71 | 2.125 | 5.00 | 2.35 | 0.500 | 34.45 | 37.45 | 10.35 |
| **360TC** | 11.00 | 12.500 | 0.16 | 17.72 | 0.71 | 2.375 | 5.62 | 2.65 | 0.625 | 37.36 | 40.36 | 13.27 |


Send Quote Requests to info@automatedpt.com
Call +1(800)985-6929 To Order or Order Online At Nordgearmotors.com

Send Quote Requests to info@automatedpt.com
Call +1(800)985-6929 To Order or Order Online At Nordgearmotors.com

# SK 83 - W
# SK 83F - W

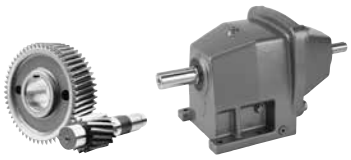



## SK 83

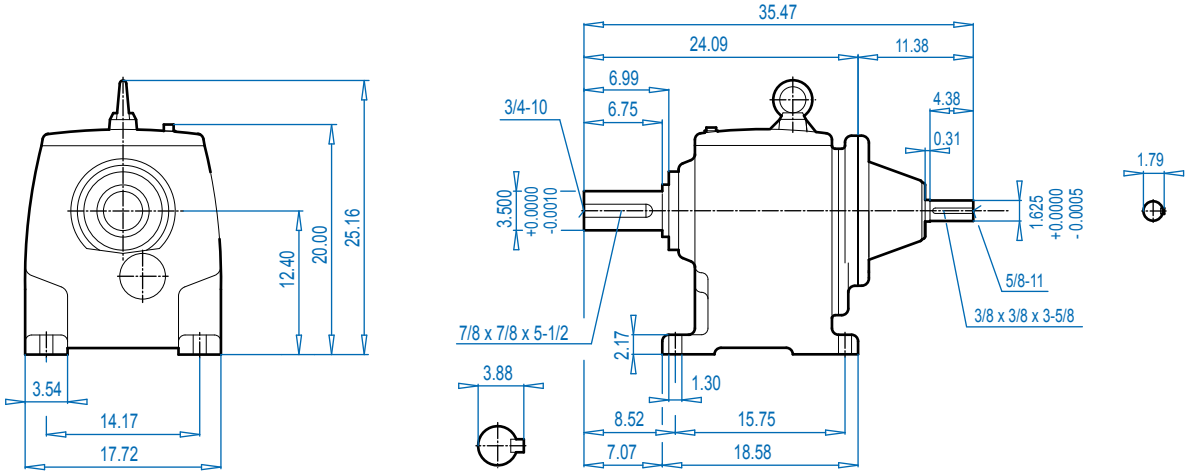


## SK 83F

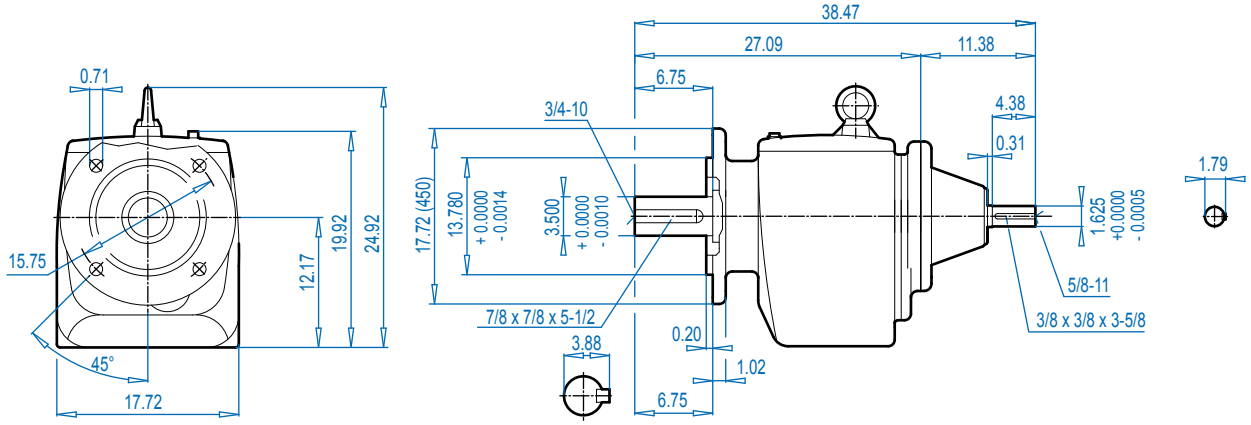



Send Quote Requests to info@automatedpt.com
Call +1(800)985-6929 To Order or Order Online At Nordgearmotors.com

Send Quote Requests to info@automatedpt.com
Call +1(800)985-6929 To Order or Order Online At Nordgearmotors.com



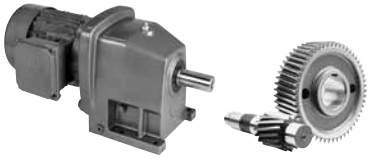

# SK 92 + Motor
# SK 92F + Motor



## SK 92

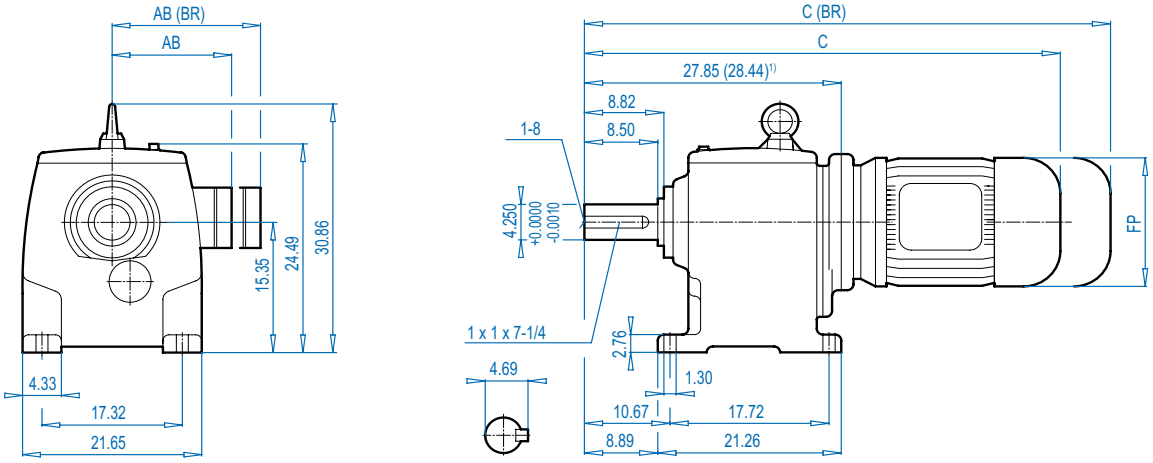


## SK 92F

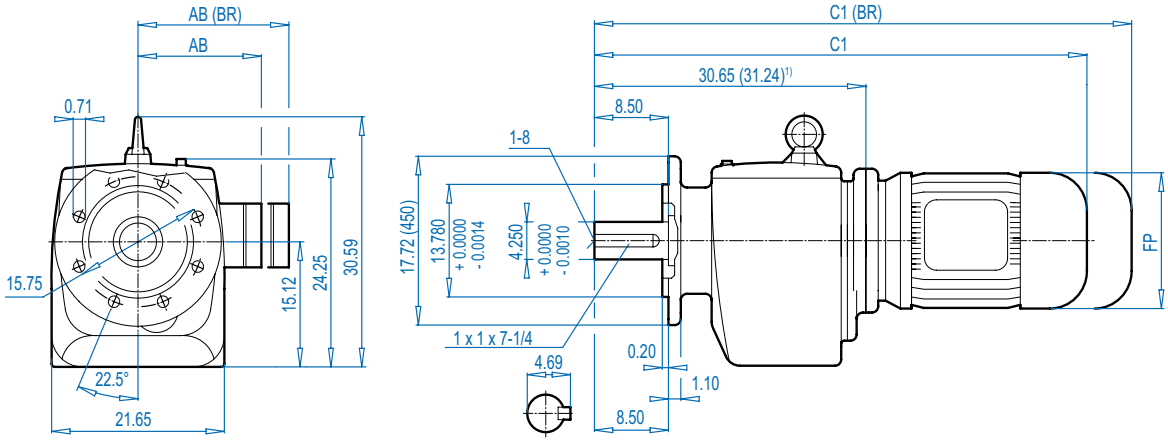


ALTERNATE SHAFTS SEE PAGE 239

### Motor Dimensions

| Standard eff. | 225 S/M | | 250 M1) | | 280 S1) | 280 M1) | | 315 S1) | 315 Ma1) | For Other Connection Possibilities please see ⇨ 237 |
|---|---|---|---|---|---|---|---|---|---|---|
| Energy eff. | | 225 SH/MH | | 250 MH1) | 280 SH1) | | 280 MH1) | 315 SH1) | 315 MHa1) | |
| AB | 12.05 | 12.80 | 15.43 | 15.43 | 17.01 | 17.01 | 17.01 | 20.28 | 20.28 | |
| AB (BR) | 12.05 | - | 15.43 | 15.43 | 17.01 | 17.01 | 17.01 | - | - | |
| C | 36.16 | 54.96 | 58.43 | 61.10 | 62.48 | 60.70 | 65.03 | 66.61 | 72.12 | |
| C (BR) | 39.75 | - | 66.61 | 69.36 | 73.70 | 71.73 | 75.66 | - | - | |
| C1 | 57.76 | 57.64 | 61.14 | 63.90 | 65.28 | 63.50 | 67.83 | 69.41 | 74.92 | |
| C1 (BR) | 64.33 | - | 69.41 | 72.16 | 76.50 | 74.13 | 78.46 | - | - | |
| FP | 15.67 | 17.52 | 19.49 | 19.49 | 22.64 | 21.85 | 21.85 | 25.39 | 25.39 | |



**(BR)** denotes Brakemotor  1) This motor type increases overall dimension length



Send Quote Requests to info@automatedpt.com
Call +1(800)985-6929 To Order or Order Online At Nordgearmotors.com

# SK 92 + NEMA
# SK 92F + NEMA

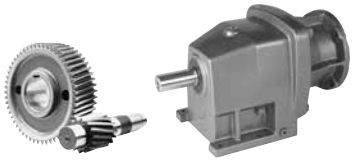



## SK 92

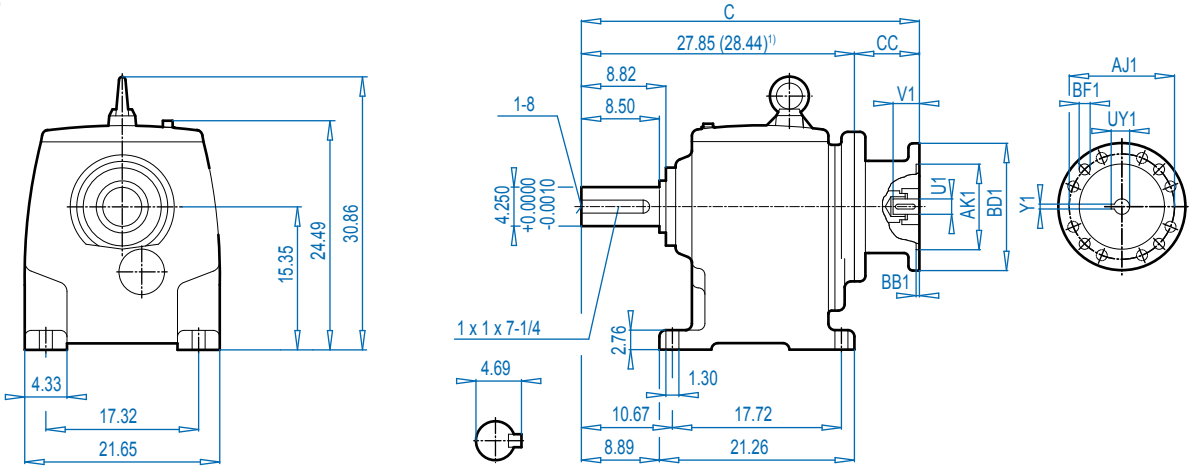


## SK 92F

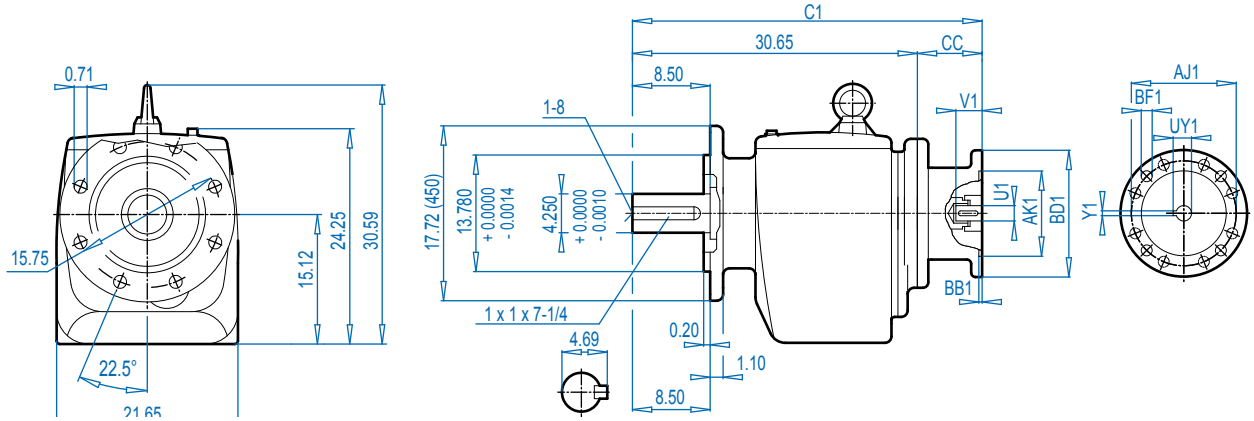


### NEMA Dimensions

| Type | AJ1 | AK1 | BB1 | BD1 | BF1 | U1 | V1 | UY1 | Y1 | C | C1 | CC |
|---|---|---|---|---|---|---|---|---|---|---|---|---|
| **180TC** | 7.25 | 8.500 | 0.23 | 9.17 | 0.59 | 1.125 | 2.62 | 1.24 | 0.250 | 35.37 | 38.19 | 7.52 |
| **210TC** | 7.25 | 8.500 | 0.39 | 9.17 | 0.59 | 1.375 | 3.12 | 1.52 | 0.312 | 35.37 | 38.19 | 7.52 |
| **250TC** | 7.25 | 8.500 | 0.23 | 9.17 | 0.59 | 1.625 | 3.75 | 1.80 | 0.375 | 39.23 | 42.05 | 11.38 |
| **280TC**1) | 9.00 | 10.500 | 0.23 | 13.78 | 0.59 | 1.875 | 4.38 | 2.03 | 0.500 | 39.82 | 42.05 | 11.38 |
| **320TC**1) | 11.00 | 12.500 | 0.23 | 13.78 | 0.71 | 2.125 | 5.00 | 2.35 | 0.500 | 38.80 | 41.02 | 10.35 |
| **360TC**1) | 11.00 | 12.500 | 0.16 | 21.65 | 0.71 | 2.375 | 5.62 | 2.65 | 0.625 | 41.73 | 43.96 | 13.29 |


Send Quote Requests to info@automatedpt.com
Call +1(800)985-6929 To Order or Order Online At Nordgearmotors.com

Send Quote Requests to info@automatedpt.com
Call +1(800)985-6929 To Order or Order Online At Nordgearmotors.com



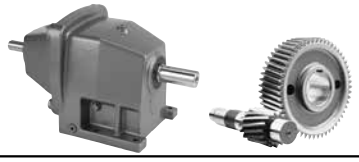

# SK 92 - W
# SK 92F - W



## SK 92

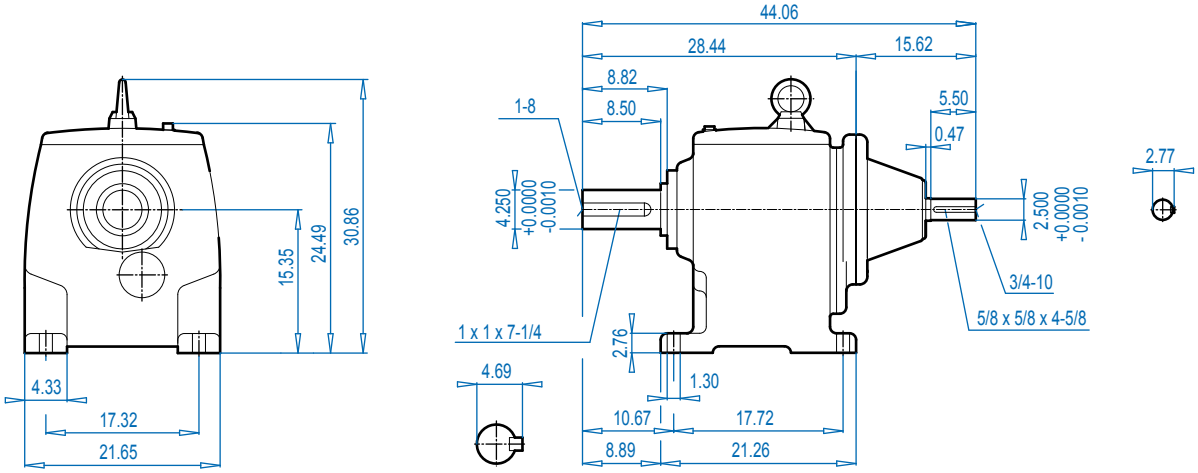


## SK 92F

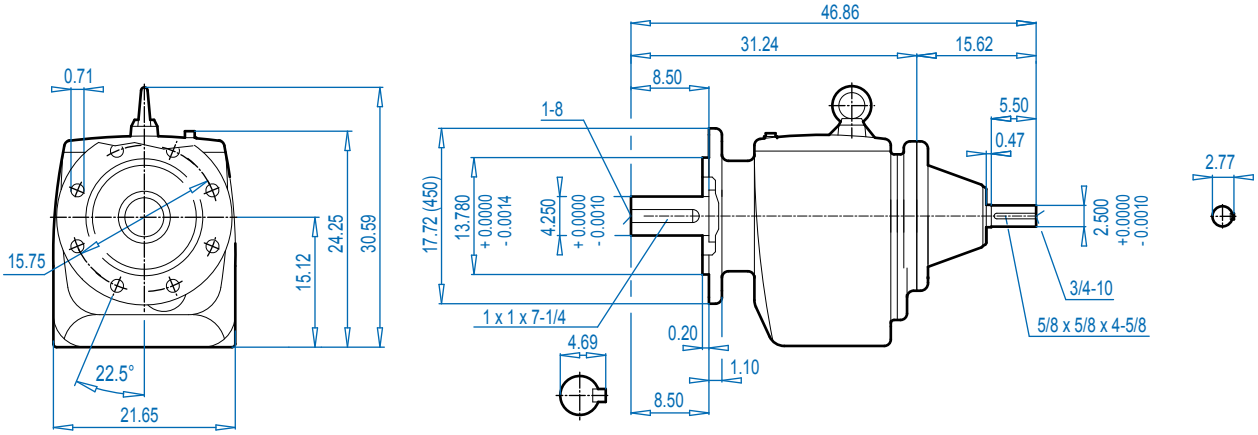


ALTERNATE SHAFTS SEE PAGE 239


Send Quote Requests to info@automatedpt.com
Call +1(800)985-6929 To Order or Order Online At Nordgearmotors.com

# SK 93 + Motor
# SK 93F + Motor

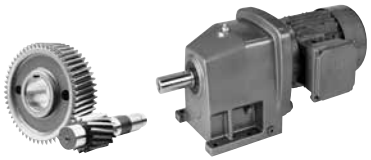

DRIVESYSTEMS



## SK 93

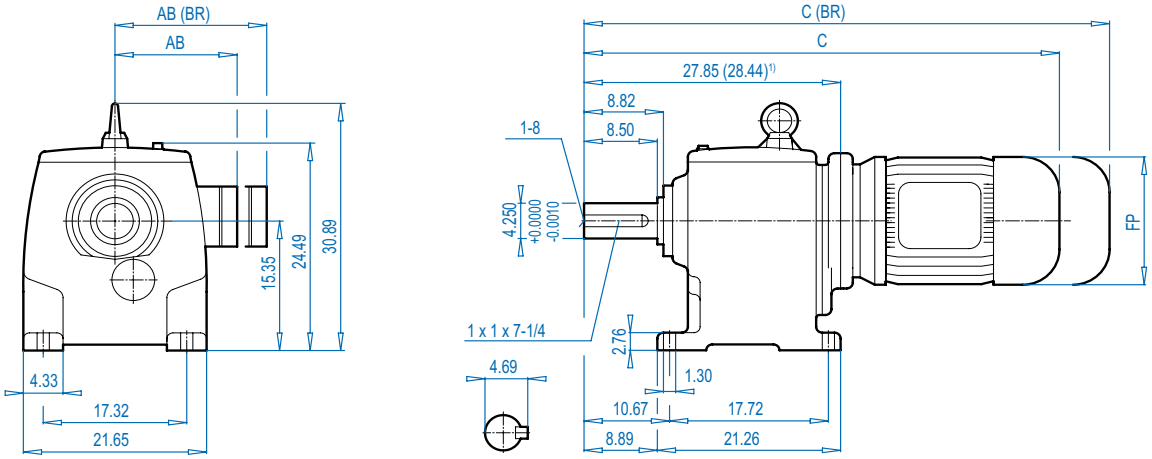


## SK 93F

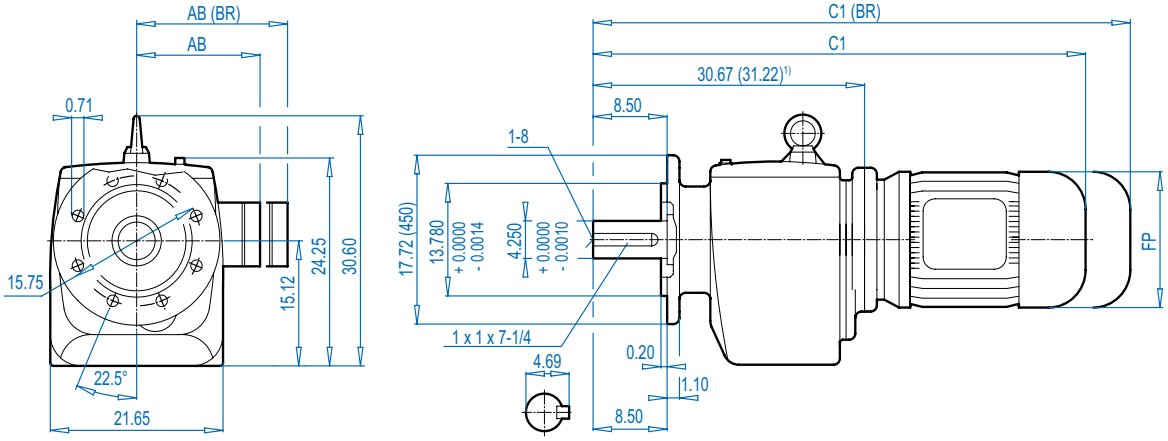


### Motor Dimensions

| Standard eff. | 132 S/M | 160 M/L | | 180 MX/LX | | 200 L | 225 S/M | | 250 M1) | | 280 S1) | For Other Connection Possibilities please see ⇨ 237 |
|---|---|---|---|---|---|---|---|---|---|---|---|---|
| Energy eff. | 132 SH/MH | 160 MH | 160 LH | | 180 MH/LH | 200 LH | | 225 SH/MH | | 250 MH1) | 280 SH1) | |
| AB | 8.03 | 8.90 | 8.90 | 8.90 | 10.20 | 12.05 | 12.05 | 12.80 | 15.43 | 15.43 | 17.01 | |
| AB (BR) | 7.72 | 8.90 | 8.90 | 8.90 | 10.20 | 12.05 | 12.05 | - | 15.43 | 15.43 | 17.01 | |
| C | 44.99 | 46.68 | 48.26 | 48.26 | 51.57 | 54.96 | 54.96 | 54.84 | 58.34 | 61.10 | 62.48 | |
| C (BR) | 49.20 | 53.26 | 54.99 | 54.99 | 55.70 | 61.53 | 61.53 | - | 66.61 | 69.36 | 73.70 | |
| C1 | 47.80 | 49.48 | 51.06 | 51.06 | 54.37 | 57.76 | 57.76 | 57.64 | 61.14 | 63.90 | 65.28 | |
| C1 (BR) | 52.01 | 56.06 | 57.79 | 57.79 | 58.50 | 64.33 | 64.33 | - | 69.41 | 72.16 | 76.50 | |
| FP | 10.16 | 12.60 | 12.60 | 12.60 | 14.09 | 15.67 | 15.67 | 17.52 | 19.49 | 19.49 | 22.64 | |



**(BR)** denotes Brakemotor  1) This motor type increases overall dimension length


Send Quote Requests to info@automatedpt.com
Call +1(800)985-6929 To Order or Order Online At Nordgearmotors.com

Send Quote Requests to info@automatedpt.com
Call +1(800)985-6929 To Order or Order Online At Nordgearmotors.com



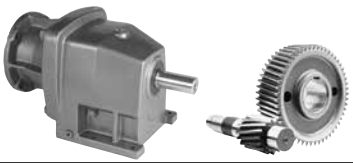

# SK 93 + NEMA
# SK 93F + NEMA



## SK 93

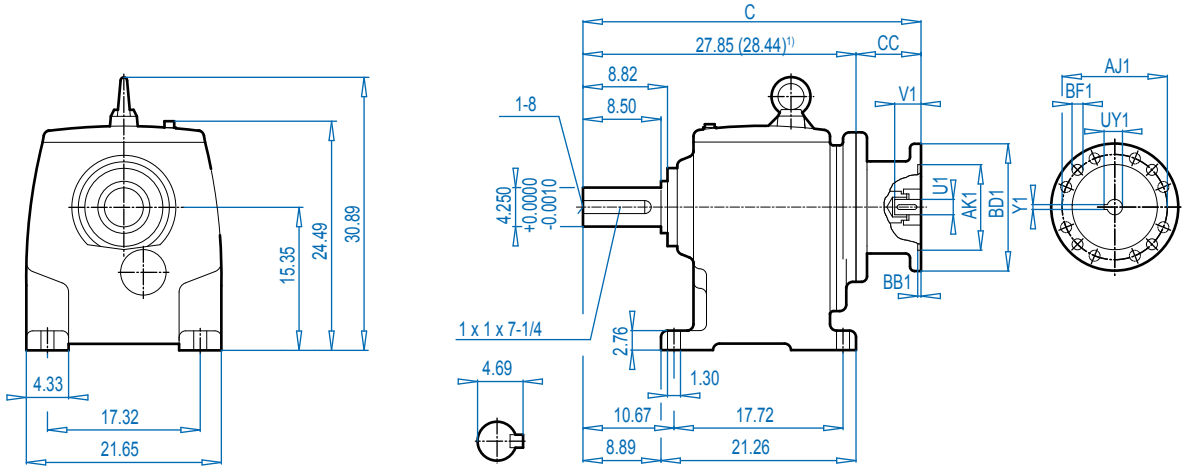


## SK 93F

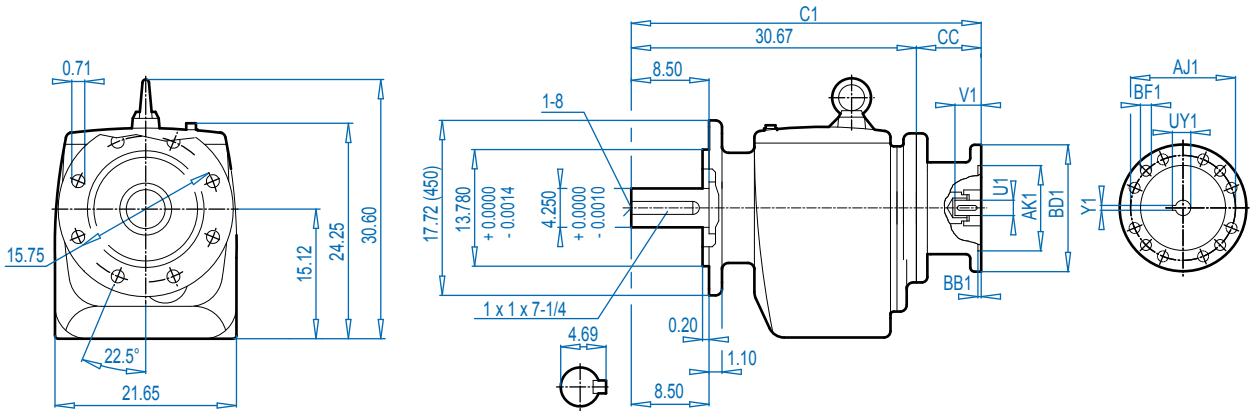


ALTERNATE SHAFTS SEE PAGE 239

### NEMA Dimensions

| Type | AJ1 | AK1 | BB1 | BD1 | BF1 | U1 | V1 | UY1 | Y1 | C | C1 | CC |
|---|---|---|---|---|---|---|---|---|---|---|---|---|
| **180TC** | 7.25 | 8.500 | 0.23 | 9.17 | 0.59 | 1.125 | 2.62 | 1.24 | 0.250 | 35.37 | 38.19 | 7.52 |
| **210TC** | 7.25 | 8.500 | 0.39 | 9.17 | 0.59 | 1.375 | 3.12 | 1.52 | 0.312 | 35.37 | 38.19 | 7.52 |
| **250TC** | 7.25 | 8.500 | 0.23 | 9.17 | 0.59 | 1.625 | 3.75 | 1.80 | 0.375 | 39.23 | 42.05 | 11.38 |
| **280TC** | 9.00 | 10.500 | 0.23 | 13.78 | 0.59 | 1.875 | 4.38 | 2.03 | 0.500 | 39.23 | 42.05 | 11.38 |
| **320TC** | 11.00 | 12.500 | 0.23 | 13.78 | 0.71 | 2.125 | 5.00 | 2.35 | 0.500 | 38.21 | 41.02 | 10.35 |
| **360TC**1) | 11.00 | 12.500 | 0.16 | 17.72 | 0.71 | 2.375 | 5.62 | 2.65 | 0.625 | 41.71 | 43.94 | 13.27 |


Send Quote Requests to info@automatedpt.com
Call +1(800)985-6929 To Order or Order Online At Nordgearmotors.com

# SK 93 - W
# SK 93F - W

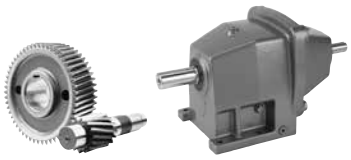

DRIVESYSTEMS



## SK 93

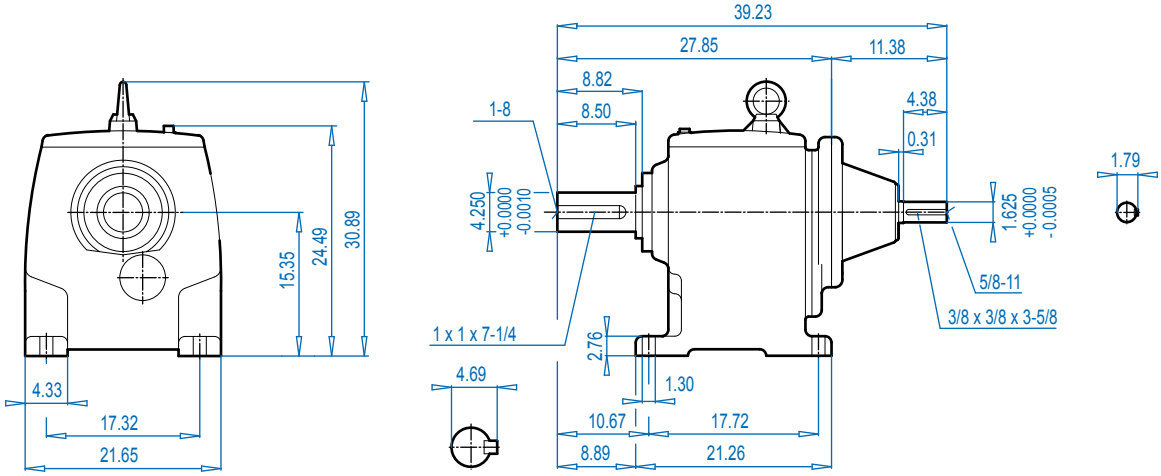


## SK 93F

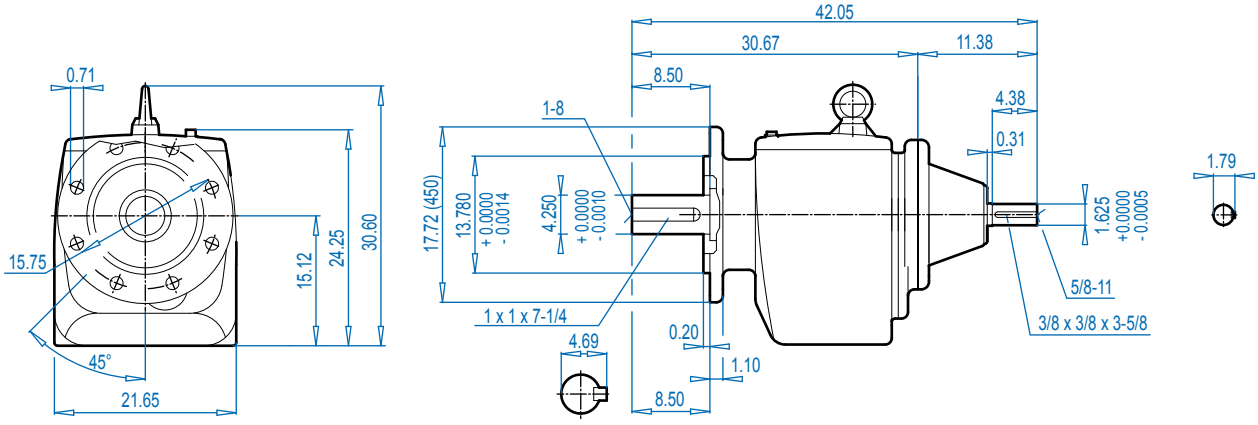


ALTERNATE SHAFTS SEE PAGE 239


Send Quote Requests to info@automatedpt.com
Call +1(800)985-6929 To Order or Order Online At Nordgearmotors.com

Send Quote Requests to info@automatedpt.com
Call +1(800)985-6929 To Order or Order Online At Nordgearmotors.com



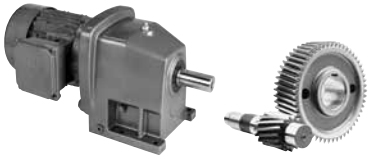

# SK 102 + Motor
# SK 102F + Motor



## SK 102

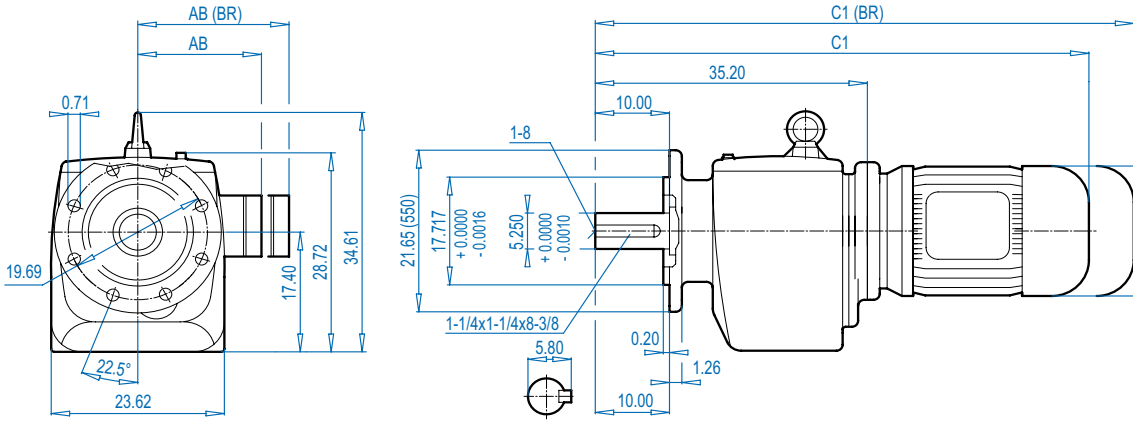


## SK 102F

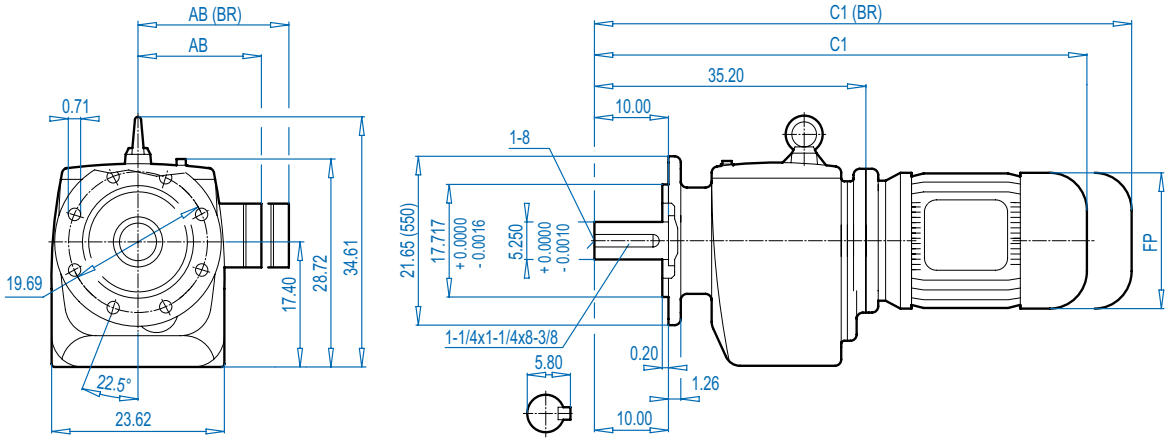


ALTERNATE SHAFTS SEE PAGE 239

### Motor Dimensions

| Standard efficiency | 280M | | 315S | 315Ma | | | For Other Connection Possibilities please see ⇨🕮 237 |
|---|---|---|---|---|---|---|---|
| Energy efficiency | | 280MH | 315SH | 315MHa | | | |
| AB | 17.01 | 17.01 | 20.28 | 20.28 | | | |
| AB (BR) | 17.01 | 17.01 | - | - | | | |
| C | 60.70 | 65.03 | 66.61 | 72.12 | | | |
| C (BR) | 71.73 | 75.66 | - | - | | | |
| C1 | 67.52 | 71.85 | 73.43 | 78.94 | | | |
| C1 (BR) | 78.15 | 82.48 | - | - | | | |
| FP | 21.85 | 21.85 | 25.39 | 25.39 | | | |

**(BR)** denotes Brakemotor



Send Quote Requests to info@automatedpt.com
Call +1(800)985-6929 To Order or Order Online At Nordgearmotors.com

# SK 102 + NEMA
# SK 102F + NEMA

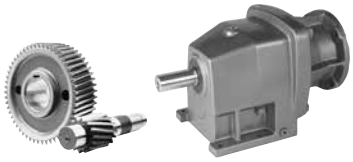



## SK 102

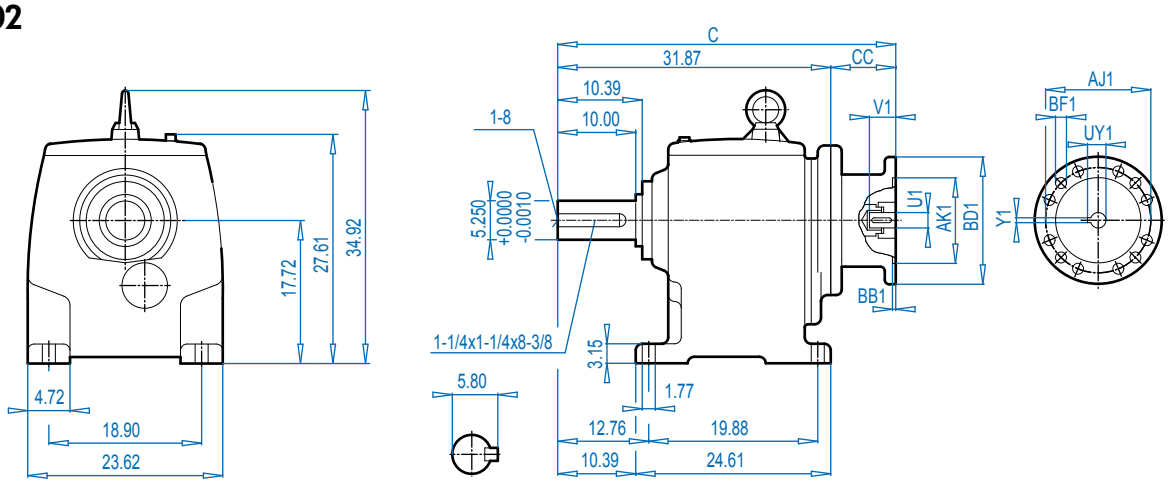


## SK 102F

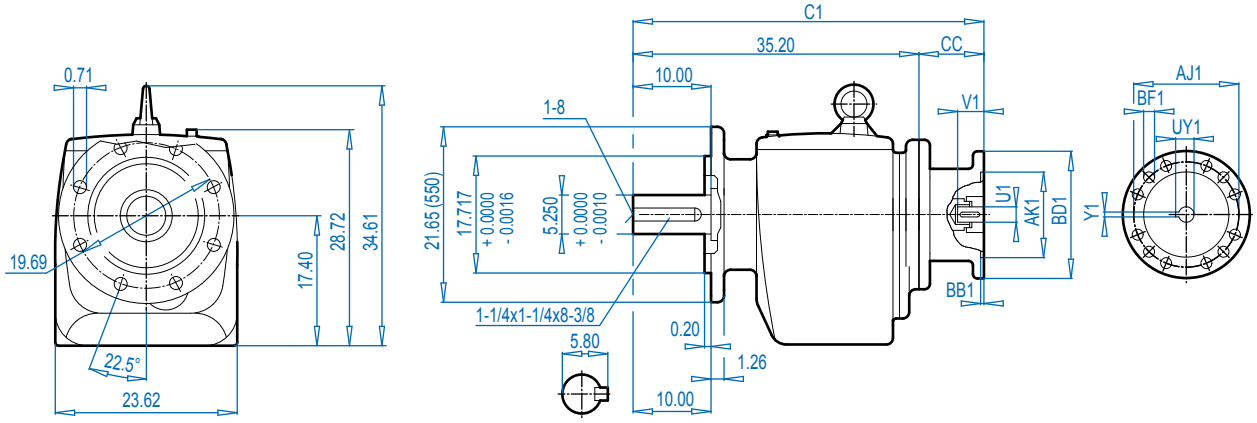


### NEMA Dimensions

| Type | AJ1 | AK1 | BB1 | BD1 | BF1 | U1 | V1 | UY1 | Y1 | C | C1 | CC |
|---|---|---|---|---|---|---|---|---|---|---|---|---|
| 360TC | 11.00 | 12.500 | 0.16 | 21.65 | 0.71 | 2.375 | 5.62 | 2.65 | 0.625 | 45.16 | 48.53 | 13.29 |
| 400TC | 11.00 | 12.500 | 0.18 | 21.65 | 0.71 | 2.28 | 7.00 | 2.35 | 0.500 | 45.16 | 48.53 | 13.29 |


Send Quote Requests to info@automatedpt.com
Call +1(800)985-6929 To Order or Order Online At Nordgearmotors.com

DRIVESYSTEMS

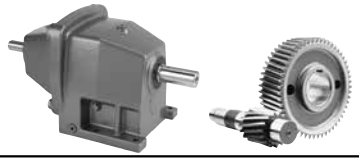

# SK 102 - W
# SK 102F - W



## SK 102

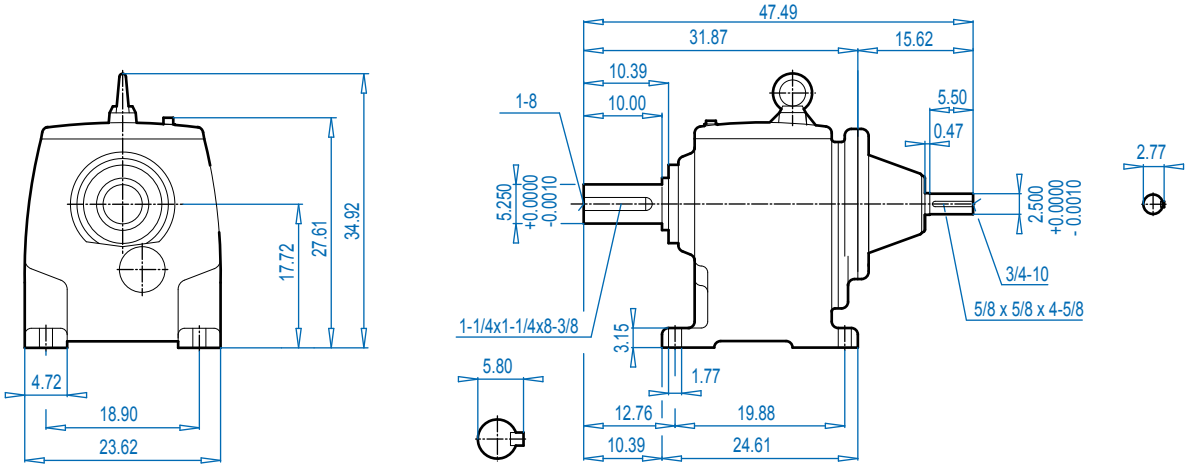


## SK 102F

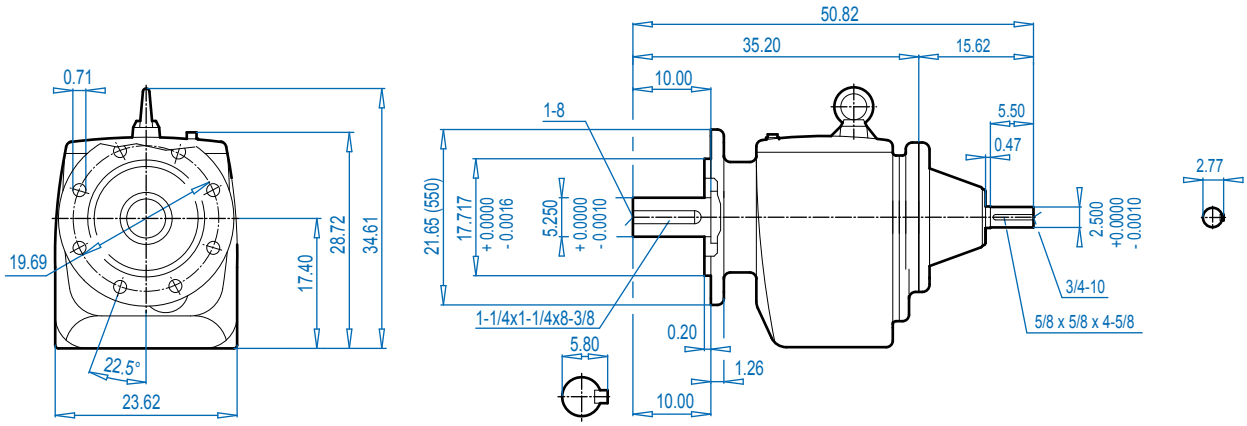


ALTERNATE SHAFTS SEE PAGE 239


Send Quote Requests to info@automatedpt.com
Call +1(800)985-6929 To Order or Order Online At Nordgearmotors.com

# SK 103 + Motor
# SK 103F + Motor

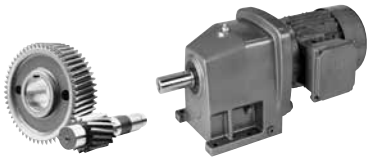

DRIVESYSTEMS



## SK 103

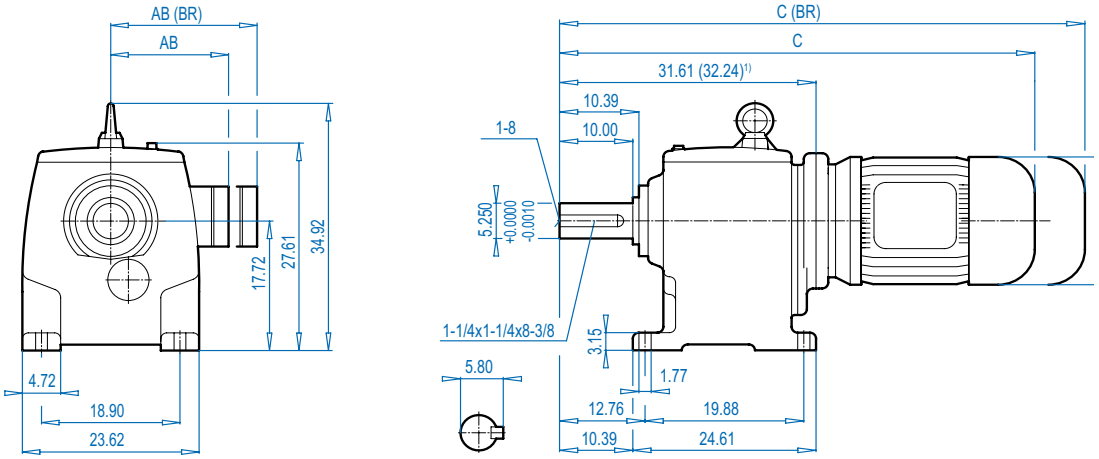


## SK 103F

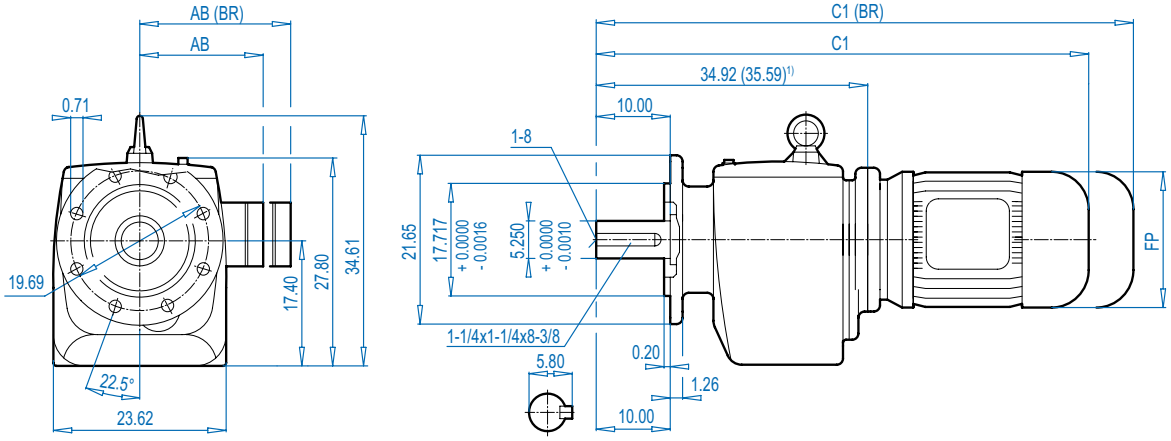


### Motor Dimensions

| Standard eff. | 132S/M | 160M/L | 180MX/LX | | 200L | 225S/M | | 250M1) | | 280S1) | 280M1) | | 315S1) | For Other Connection Possibilities please see ⇨ 237 |
|---|---|---|---|---|---|---|---|---|---|---|---|---|---|---|
| Energy eff. | 132SH/MH | 160MH | 160LH | 180MH/LH | 200LH | | 225SH/MH | | 250MH1) | 280SH1) | | 280MH1) | | |
| AB | 8.03 | 8.90 | 8.90 | 10.20 | 12.05 | 12.05 | 12.80 | 15.43 | 15.43 | 17.01 | 17.01 | 17.01 | 20.28 | |
| AB (BR) | 7.72 | 8.90 | 8.90 | 10.20 | 12.05 | 12.05 | - | 15.43 | 15.43 | 17.01 | 17.01 | 17.01 | - | |
| C | 48.74 | 50.43 | 52.00 | 55.31 | 58.70 | 58.70 | 58.58 | 62.16 | 64.92 | 66.30 | 64.52 | 68.85 | 70.43 | |
| C (BR) | 52.95 | 57.00 | 58.74 | 59.45 | 65.27 | 65.27 | - | 70.43 | 73.18 | 77.52 | 75.55 | 79.48 | - | |
| C1 | 52.09 | 53.78 | 55.35 | 58.66 | 62.05 | 62.05 | 61.93 | 65.51 | 68.27 | 69.65 | 67.87 | 72.20 | 73.78 | |
| C1 (BR) | 56.30 | 60.35 | 62.09 | 62.80 | 68.62 | 68.62 | - | 73.78 | 76.53 | 80.87 | 78.90 | 82.83 | - | |
| FP | 10.16 | 12.60 | 12.60 | 14.09 | 15.67 | 15.67 | 17.52 | 19.49 | 19.49 | 22.64 | 21.85 | 21.85 | 25.39 | |



**(BR)** denotes Brakemotor  1) This motor type increases overall dimension length


Send Quote Requests to info@automatedpt.com
Call +1(800)985-6929 To Order or Order Online At Nordgearmotors.com

Send Quote Requests to info@automatedpt.com
Call +1(800)985-6929 To Order or Order Online At Nordgearmotors.com



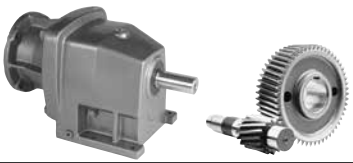

# SK 103 + NEMA
# SK 103F + NEMA



## SK 103

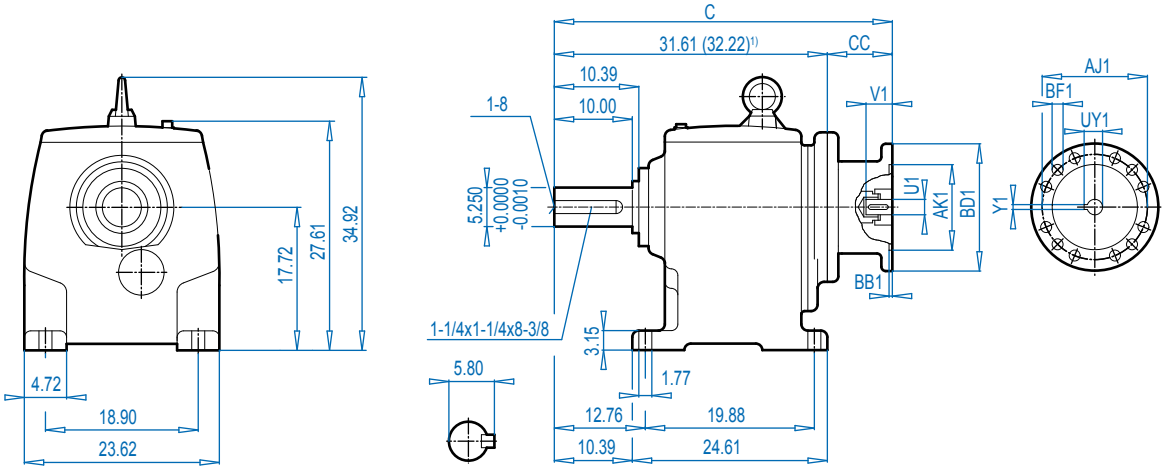


## SK 103F

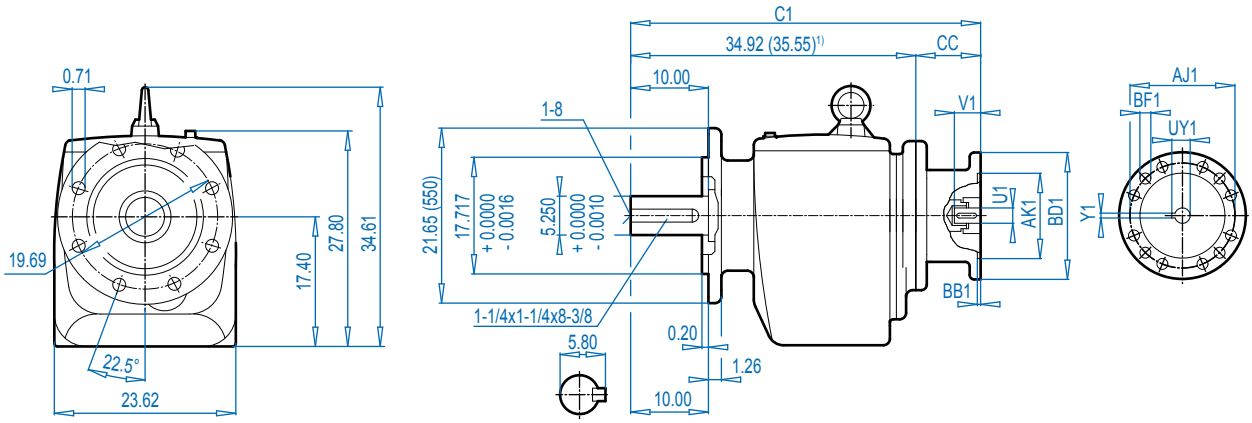


ALTERNATE SHAFTS SEE PAGE 239

**NEMA Dimensions**

| Type | AJ1 | AK1 | BB1 | BD1 | BF1 | U1 | V1 | UY1 | Y1 | C | C1 | CC |
|---|---|---|---|---|---|---|---|---|---|---|---|---|
| **180TC** | 7.25 | 8.500 | 0.23 | 9.17 | 0.59 | 1.125 | 2.62 | 1.24 | 0.250 | 39.11 | 42.44 | 7.52 |
| **210TC** | 7.25 | 8.500 | 0.39 | 9.17 | 0.59 | 1.375 | 3.12 | 1.52 | 0.312 | 39.11 | 42.44 | 7.52 |
| **250TC** | 7.25 | 8.500 | 0.23 | 9.17 | 0.59 | 1.625 | 3.75 | 1.80 | 0.375 | 42.97 | 45.90 | 11.38 |
| **280TC** | 9.00 | 10.500 | 0.23 | 13.78 | 0.59 | 1.875 | 4.38 | 2.03 | 0.500 | 42.97 | 45.90 | 11.38 |
| **320TC** | 11.00 | 12.500 | 0.23 | 13.78 | 0.71 | 2.125 | 5.00 | 2.35 | 0.500 | 41.95 | 44.87 | 10.35 |
| **360TC**1) | 11.00 | 12.500 | 0.16 | 21.65 | 0.71 | 2.375 | 5.62 | 2.65 | 0.625 | 45.51 | 47.81 | 13.29 |


Send Quote Requests to info@automatedpt.com
Call +1(800)985-6929 To Order or Order Online At Nordgearmotors.com

# SK 103 - W
# SK 103F - W

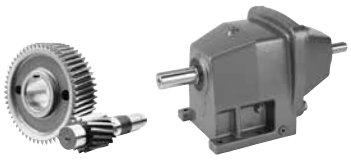

DRIVESYSTEMS



## SK 103

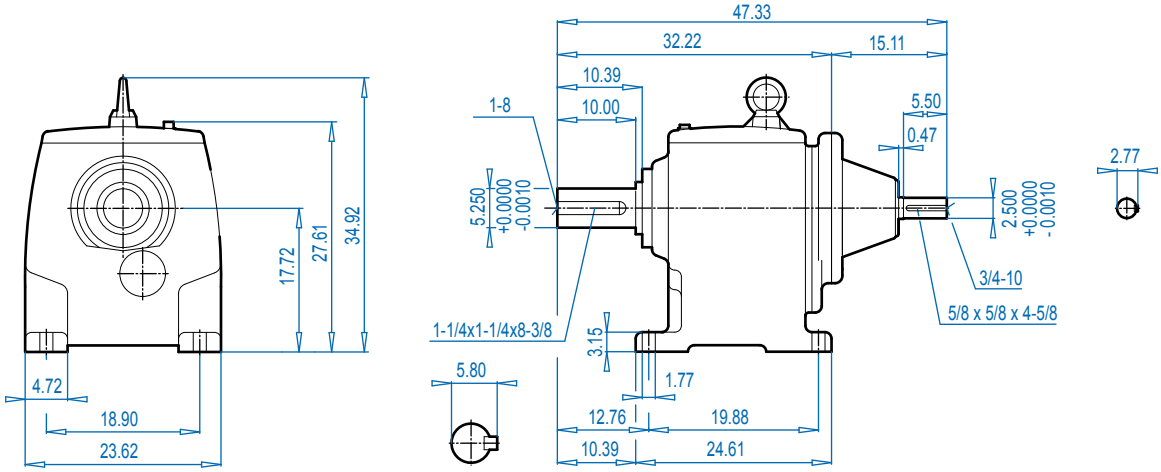


## SK 103F

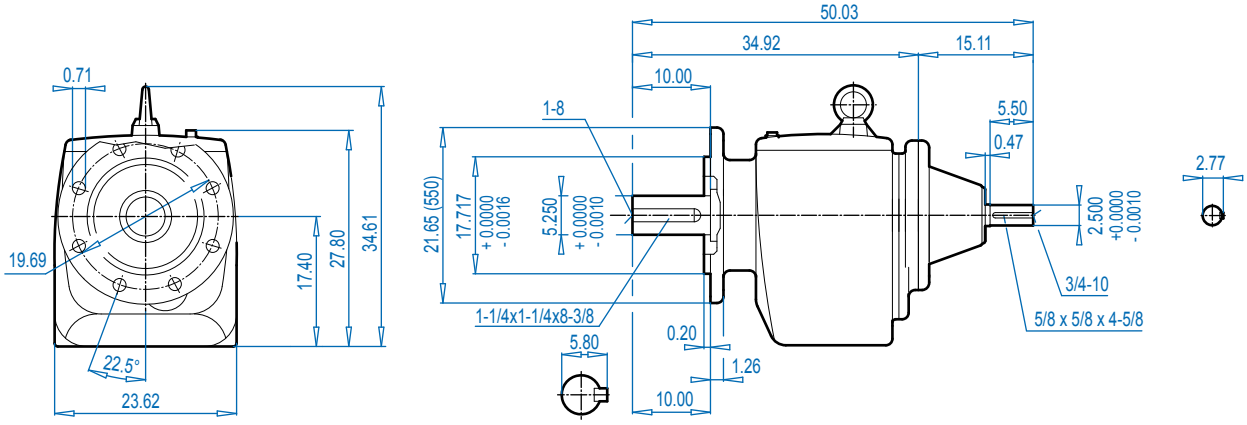



Send Quote Requests to info@automatedpt.com
Call +1(800)985-6929 To Order or Order Online At Nordgearmotors.com

Send Quote Requests to info@automatedpt.com
Call +1(800)985-6929 To Order or Order Online At Nordgearmotors.com





# SK 12/02 + Motor - SK 52/12 + Motor



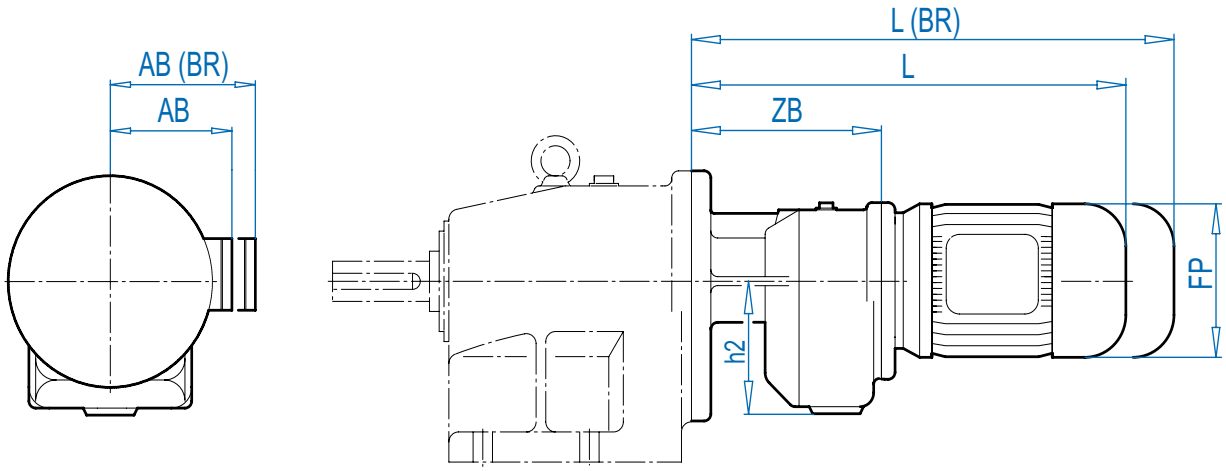


## Motor dimensions

| Type | SK 12/02 | | SK 22/02 | | | SK 32/12 | | | | For Other Connection Possibilities please see ⇨🕮 236 |
|---|---|---|---|---|---|---|---|---|---|---|
| Standard efficiency | 63S/L | 71S/L | 63S/L | 71S/L | 80S/L | 63S/L | 71S/L | 80S/L | 90S/L | |
| Energy efficiency | | | | | 80LH | | | 80LH | 90SH/LH | |
| AB | 4.53 | 4.88 | 4.53 | 4.88 | 5.59 | 4.53 | 4.88 | 5.59 | 5.79 |  |
| AB (BR) | 4.84 | 5.24 | 4.84 | 5.24 | 5.63 | 4.84 | 5.24 | 5.63 | 5.83 | |
| FP | 5.12 | 5.71 | 5.12 | 5.71 | 6.50 | 5.12 | 5.71 | 6.50 | 7.20 | |
| L | 13.31 | 14.88 | 13.94 | 15.51 | 16.50 | 14.45 | 16.02 | 17.01 | 18.62 | |
| L (BR) | 15.51 | 17.17 | 16.14 | 17.80 | 19.02 | 16.65 | 18.31 | 19.53 | 21.58 | |
| h2 | 3.50 | | 3.50 | | | 4.17 | | | | |
| ZB | 5.59 | | 6.62 | | | 6.73 | | | | |
| | SK 12 ⇨🕮 173 | | SK 22 ⇨🕮 179 | | | SK 32 ⇨🕮 185 | | | | |

| Type | SK 42/12 | | | SK 52/12 | | | | | | For Other Connection Possibilities please see ⇨🕮 236 |
|---|---|---|---|---|---|---|---|---|---|---|
| Standard efficiency | 63S/L | 71S/L | 80S/L | 63S/L | 71S/L | 80S/L | 90S/L | 100L | | |
| Energy efficiency | | | 80LH | | | 80LH | 90SH/LH | 100LH | 112MH | |
| AB | 4.53 | 4.88 | 5.59 | 4.53 | 4.88 | 5.59 | 5.79 | 6.65 | 7.05 |  |
| AB (BR) | 4.84 | 5.24 | 5.63 | 4.84 | 5.24 | 5.63 | 5.83 | 6.26 | 6.69 | |
| FP | 5.12 | 5.71 | 6.50 | 5.12 | 5.71 | 6.50 | 7.20 | 7.91 | 8.98 | |
| L | 14.61 | 16.18 | 17.17 | 14.61 | 16.18 | 17.17 | 18.78 | 19.96 | 20.87 | |
| L (BR) | 16.81 | 18.47 | 19.69 | 16.81 | 18.47 | 19.69 | 21.73 | 23.54 | 24.53 | |
| h2 | 4.17 | | | 4.17 | | | | | | |
| ZB | 6.89 | | | 6.89 | | | | | | |
| | SK 42 ⇨🕮 191 | | | SK 52 ⇨🕮 197 | | | | | | |

**(BR)** denotes Brakemotor


Send Quote Requests to info@automatedpt.com
Call +1(800)985-6929 To Order or Order Online At Nordgearmotors.com

# SK 63/22 + Motor - SK 93/42 + Motor

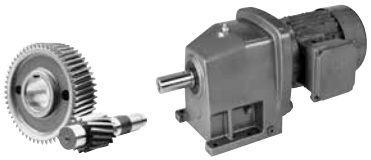

DRIVESYSTEMS

DIMENSIONS Dimensions in Inches

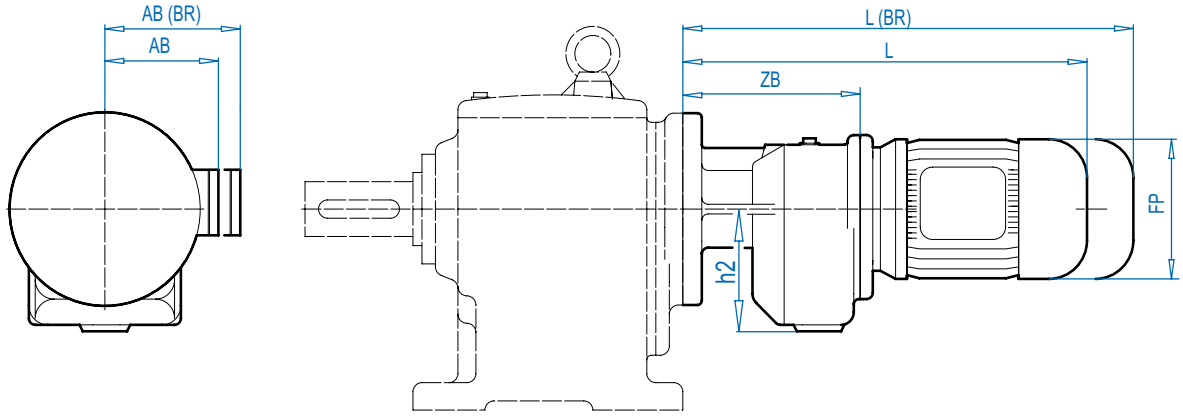


## Motor dimensions

| Type | SK 63/22 | | | | SK 73/22 | | | | For Other Connection Possibilities please see ⇨🕮 237 |
|---|---|---|---|---|---|---|---|---|---|
| Standard efficiency | 71S/L | 80S/L | 90S/L | 100L | 71S/L | 80S/L | 90S/L | 100L | |
| Energy efficiency | | 80LH | 90SH/LH | 100LH | | 80LH | 90SH/LH | 100LH | |
| AB | 4.88 | 5.59 | 5.79 | 6.65 | 4.88 | 5.59 | 5.79 | 6.65 | |
| AB (BR) | 5.24 | 5.63 | 5.83 | 6.26 | 5.24 | 5.63 | 5.83 | 6.26 | |
| FP | 5.71 | 6.50 | 7.20 | 7.91 | 5.71 | 6.50 | 7.20 | 7.91 | |
| L | 16.10 | 17.09 | 18.70 | 19.88 | 16.10 | 17.09 | 18.70 | 19.88 | |
| L (BR) | 13.39 | 19.61 | 21.65 | 23.47 | 13.39 | 19.61 | 21.65 | 23.47 | |
| h2 | 4.92 | | | | 4.92 | | | | |
| ZB | 7.05 | | | | 7.05 | | | | |
| | SK 63 ⇨🕮 206 | | | | SK 73 ⇨🕮 212 | | | | |



| Type | SK 73/32 | | | | | SK 83/32 | | | For Other Connection Possibilities please see ⇨🕮 237 |
|---|---|---|---|---|---|---|---|---|---|
| Standard efficiency | 90S/L | 100L | 112M | | 132S/M | 71S/L | 80S/L | 90S/L | |
| Energy efficiency | 90SH/LH | 100LH | | 112MH | 132SH/MH | | 80LH | 90SH/LH | |
| AB | 5.79 | 6.65 | 7.05 | 7.05 | 8.03 | 4.88 | 5.59 | 5.79 | |
| AB (BR) | 5.83 | 6.28 | 6.69 | 6.69 | 7.72 | 5.24 | 5.63 | 5.83 | |
| FP | 7.20 | 7.91 | 8.98 | 8.98 | 10.47 | 5.71 | 6.50 | 7.20 | |
| L | 20.28 | 21.46 | 22.36 | 22.36 | 25.75 | 17.68 | 18.66 | 20.28 | |
| L (BR) | 23.23 | 25.04 | 26.02 | 26.02 | 29.96 | 19.96 | 21.18 | 23.23 | |
| h2 | 6.10 | | | | | 6.10 | | | |
| ZB | 8.62 | | | | | 8.62 | | | |
| | SK 73 ⇨🕮 212 | | | | | SK 83 ⇨🕮 218 | | | |



| Type | SK 83/42 | | | | SK 93/42 | | | | | | For Other Connection Possibilities please see ⇨🕮 237 |
|---|---|---|---|---|---|---|---|---|---|---|---|
| Standard eff. | 90S/L | 100L | | 132S/M | 90S/L | 100L | 112M | 132S/M | 160M/L | | |
| Energy eff. | 90SH/LH | 100LH | 112M | 132SH/MH | 90SH/LH | 100LH | | 132SH/MH | 160MH | 160LH | |
| AB | 5.79 | 6.65 | 7.05 | 8.03 | 5.79 | 6.65 | 7.05 | 8.03 | 8.90 | 8.90 | |
| AB (BR) | 5.83 | 6.26 | 6.69 | 7.72 | 5.83 | 6.26 | 6.69 | 7.72 | 8.90 | 8.90 | |
| FP | 7.20 | 7.91 | 8.98 | 10.47 | 7.20 | 7.91 | 8.98 | 10.47 | 12.60 | 12.60 | |
| L | 21.14 | 22.32 | 23.23 | 26.61 | 21.14 | 22.32 | 23.23 | 26.61 | 29.09 | 29.09 | |
| L (BR) | 24.09 | 25.91 | 26.89 | 30.83 | 24.09 | 25.91 | 26.89 | 30.83 | 35.67 | 35.67 | |
| h2 | 6.89 | | | | 6.89 | | | | | | |
| ZB | 10.28 | | | | 10.28 | | | | | | |
| | SK 83 ⇨🕮 218 | | | | SK 93 ⇨🕮 224 | | | | | | |



**(BR)** denotes Brakemotor


Send Quote Requests to info@automatedpt.com
Call +1(800)985-6929 To Order or Order Online At Nordgearmotors.com

DRIVESYSTEMS



# SK 93/52 + Motor
# SK 103/52 + Motor
# SK 63/23 + Motor



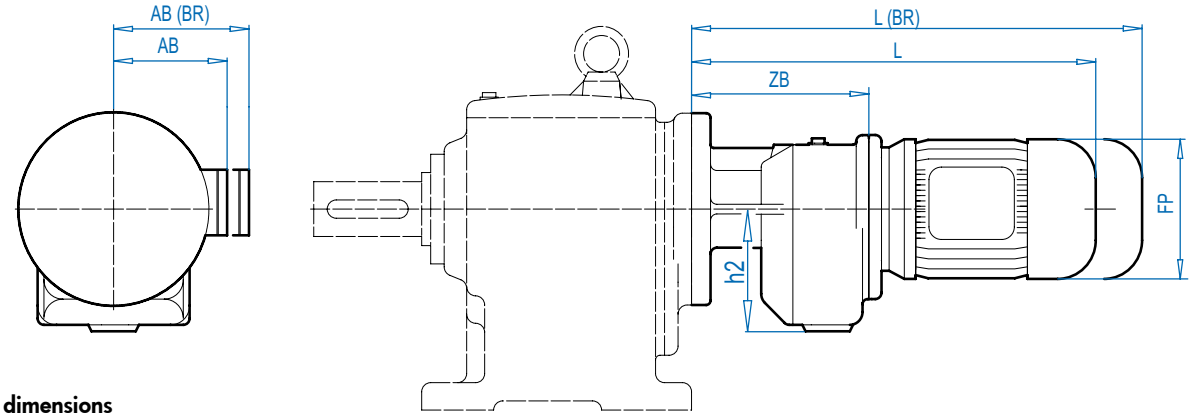


**Motor dimensions**

| Type | SK 93/52 | | | SK 103/52 | | | | | | | | For Other Connection Possibilities please see ⇨🕮 237 |
|---|---|---|---|---|---|---|---|---|---|---|---|---|
| Standard eff. | 132S/M | 180MX/LX | | 90S/L | 100L | | 132S/M | 160M/L | | 180MX/LX | | |
| Energy eff. | 132SH/LH | | 180MH/LH | 90SH/LH | 100LH | 112MH | 132SH/MH | 160MH | 160LH | | 180MH/LH | |
| AB | 8.03 | 8.90 | 10.20 | 5.79 | 6.65 | 7.05 | 8.03 | 8.90 | 8.90 | 8.90 | 10.20 | |
| AB (BR) | 7.72 | 8.90 | 10.20 | 5.83 | 6.26 | 6.69 | 7.72 | 8.90 | 8.90 | 8.90 | 10.20 | |
| FP | 10.47 | 12.60 | 14.09 | 7.20 | 7.91 | 8.98 | 10.47 | 12.60 | 12.60 | 12.60 | 14.09 | |
| L | 28.15 | 32.21 | 36.29 | 22.68 | 23.86 | 24.76 | 28.15 | 30.63 | 32.21 | 32.21 | 36.30 | |
| L (BR) | 32.36 | 38.94 | 40.43 | 25.63 | 27.44 | 28.43 | 32.36 | 37.21 | 38.94 | 38.94 | 40.43 | |
| h2 | 8.35 | | | 8.35 | | | | | | | | |
| ZB | 11.81 | | | 11.81 | | | | | | | | |
| | SK 93 ⇨🕮 224 | | | SK 103 ⇨🕮 230 | | | | | | | | |

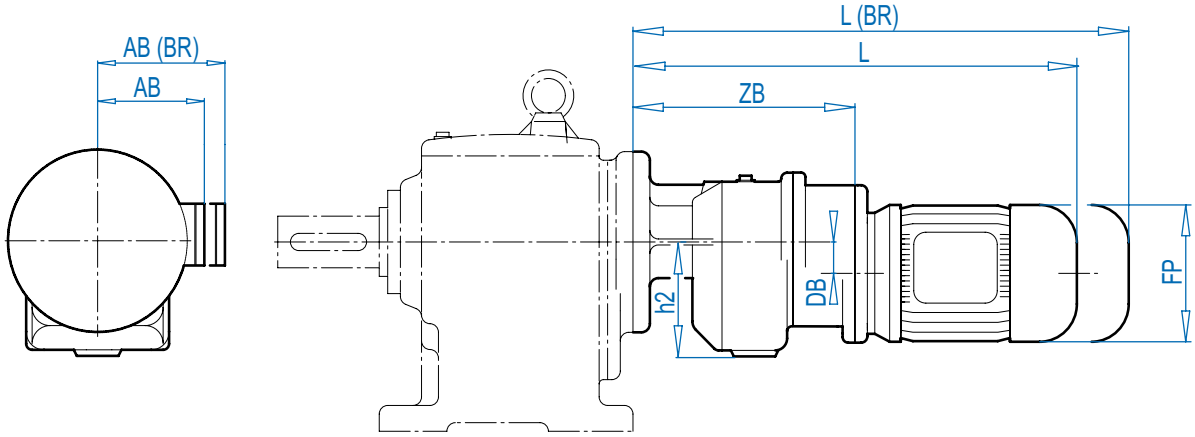


| Type | SK 63/23 | | | | | | | | For Other Connection Possibilities please see ⇨🕮 237 |
|---|---|---|---|---|---|---|---|---|---|
| Standard efficiency | 63S/L | 71S/L | 80S/L | | | | | | |
| Energy efficiency | | | 80LH | | | | | | |
| AB | 4.53 | 4.88 | 5.59 | | | | | | |
| AB (BR) | 4.84 | 5.24 | 5.63 | | | | | | |
| FP | 5.12 | 5.71 | 6.50 | | | | | | |
| DB | 1.67 | | | | | | | | |
| L | 17.13 | 18.70 | 19.69 | | | | | | |
| L (BR) | 19.33 | 20.98 | 22.21 | | | | | | |
| h2 | 4.92 | | | | | | | | |
| ZB | 9.41 | | | | | | | | |
| | SK 63 ⇨🕮 206 | | | | | | | | |

**(BR)** denotes Brakemotor


Send Quote Requests to info@automatedpt.com
Call +1(800)985-6929 To Order or Order Online At Nordgearmotors.com

# IEC Inputs



DRIVESYSTEMS

DIMENSIONS
Dimensions in Inches

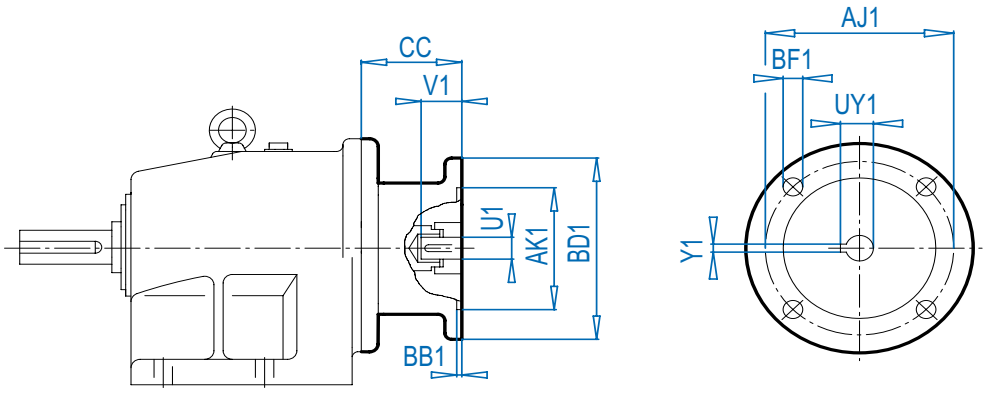


## IEC Dimensions (mm)

| Input | AJ1 | AK1 | BB1 | BD1 | BF1 | U1 | V1 | UY1 | Y1 | Flange |
|---|---|---|---|---|---|---|---|---|---|---|
| IEC 63 | 115 | 95 | 3.5 | 140 | M8 | 11 | 23 | 12.8 | 4 | Fig. 1 |
| IEC 71 | 130 | 110 | 4.0 | 160 | M8 | 14 | 30 | 16.3 | 5 | Fig. 1 |
| IEC 80 | 165 | 130 | 4.0 | 200 | M10 | 19 | 40 | 21.8 | 6 | Fig. 1 |
| IEC 90 | 165 | 130 | 4.0 | 200 | M10 | 24 | 50 | 27.3 | 8 | Fig. 1 |
| IEC 100 | 215 | 180 | 5.0 | 250 | M12 | 28 | 60 | 31.3 | 8 | Fig. 1 |
| IEC 112 | 215 | 180 | 5.0 | 250 | M12 | 28 | 60 | 31.3 | 8 | Fig. 1 |
| IEC 132 | 265 | 230 | 5.0 | 300 | M12 | 38 | 80 | 41.3 | 10 | Fig. 1 |
| IEC 160 | 300 | 250 | 6.0 | 350 | M16 | 42 | 110 | 45.3 | 12 | Fig. 1 |
| IEC 180 | 300 | 250 | 6.0 | 350 | M16 | 48 | 110 | 51.8 | 14 | Fig. 1 |
| IEC 200 | 350 | 300 | 6.0 | 400 | M16 | 55 | 110 | 59.3 | 16 | Fig. 1 |
| IEC 225 | 400 | 350 | 6.0 | 450 | M16 | 60 | 140 | 64.4 | 18 | Fig. 2 |
| IEC 250 | 500 | 450 | 6.0 | 550 | M16 | 65 | 140 | 69.4 | 18 | Fig. 2 |
| IEC 280 | 500 | 450 | 6.0 | 550 | M16 | 75 | 140 | 79.9 | 20 | Fig. 2 |
| IEC 315 | 600 | 550 | 7.0 | 660 | M20 | 80 | 170 | 85.4 | 22 | Fig. 2 |

## CC Dimension (mm)

| Unit | IEC 63 | IEC71 | IEC 80 | IEC 90 | IEC 100 | IEC 112 | IEC 132 | IEC 160 | IEC 180 | IEC 200 | IEC 225 | IEC 250 | IEC 280 | IEC 315 |
|---|---|---|---|---|---|---|---|---|---|---|---|---|---|---|
| SK 02 | 85 | 89 | 105 | 105 | 130 | 130 | - | - | - | - | - | - | - | - |
| SK 03 | 85 | 89 | 105 | 105 | 130 | 130 | - | - | - | - | - | - | - | - |
| SK 11E | 85 | 89 | 105 | 105 | 130 | 130 | - | - | - | - | - | - | - | - |
| SK 12 | 85 | 89 | 105 | 105 | 130 | 130 | - | - | - | - | - | - | - | - |
| SK 13 | 85 | 89 | 105 | 105 | 130 | 130 | - | - | - | - | - | - | - | - |
| SK 12/02 | 85 | 89 | 105 | 105 | 130 | 130 | - | - | - | - | - | - | - | - |
| SK 21E | - | 88 | 107 | 107 | 124 | 124 | 194 | - | - | - | - | - | - | - |
| SK 22 | - | 88 | 107 | 107 | 124 | 124 | 194 | - | - | - | - | - | - | - |
| SK 23 | 85 | 89 | 105 | 105 | 130 | 130 | - | - | - | - | - | - | - | - |
| SK 22/02 | 85 | 89 | 105 | 105 | 130 | 130 | - | - | - | - | - | - | - | - |
| SK 31E | - | 88 | 107 | 107 | 124 | 124 | 194 | - | - | - | - | - | - | - |
| SK 32 | - | 88 | 107 | 107 | 124 | 124 | 194 | - | - | - | - | - | - | - |
| SK 33N | 85 | 89 | 105 | 105 | 130 | 130 | - | - | - | - | - | - | - | - |
| SK 32/12 | 85 | 89 | 105 | 105 | 130 | 130 | - | - | - | - | - | - | - | - |
| SK 41E | - | - | - | 109 | 133 | 133 | 190 | 194 | 194 | - | - | - | - | - |
| SK 42 | - | - | - | 109 | 133 | 133 | 190 | 194 | 194 | - | - | - | - | - |
| SK 43 | - | 88 | 107 | 107 | 124 | 124 | 194 | - | - | - | - | - | - | - |
| SK 42/12 | 85 | 89 | 105 | 105 | 130 | 130 | - | - | - | - | - | - | - | - |
| SK 51E | - | - | - | 109 | 133 | 133 | 190 | 194 | 194 | - | - | - | - | - |
| SK 52 | - | - | - | 109 | 133 | 133 | 190 | 194 | 194 | - | - | - | - | - |
| SK 53 | - | 88 | 107 | 107 | 124 | 124 | 194 | - | - | - | - | - | - | - |
| SK 52/12 | 85 | 89 | 105 | 105 | 130 | 130 | - | - | - | - | - | - | - | - |


Send Quote Requests to info@automatedpt.com
Call +1(800)985-6929 To Order or Order Online At Nordgearmotors.com

DRIVESYSTEMS

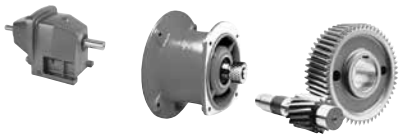

# IEC Inputs



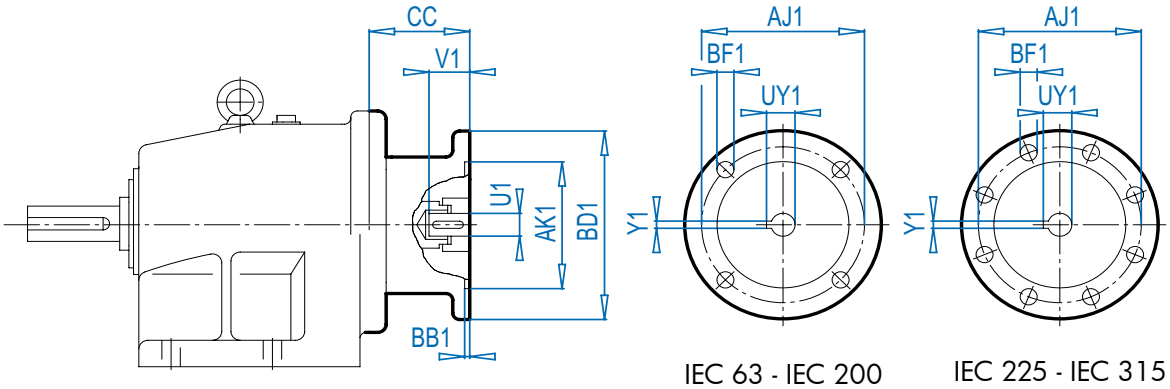


IEC 63 - IEC 200

IEC 225 - IEC 315

**IEC Dimensions (mm)**

| Input | AJ1 | AK1 | BB1 | BD1 | BF1 | U1 | V1 | UY1 | Y1 | Flange |
|---|---|---|---|---|---|---|---|---|---|---|
| IEC 63 | 115 | 95 | 3.5 | 140 | M8 | 11 | 23 | 12.8 | 4 | Fig. 1 |
| IEC 71 | 130 | 110 | 4.0 | 160 | M8 | 14 | 30 | 16.3 | 5 | Fig. 1 |
| IEC 80 | 165 | 130 | 4.0 | 200 | M10 | 19 | 40 | 21.8 | 6 | Fig. 1 |
| IEC 90 | 165 | 130 | 4.0 | 200 | M10 | 24 | 50 | 27.3 | 8 | Fig. 1 |
| IEC 100 | 215 | 180 | 5.0 | 250 | M12 | 28 | 60 | 31.3 | 8 | Fig. 1 |
| IEC 112 | 215 | 180 | 5.0 | 250 | M12 | 28 | 60 | 31.3 | 8 | Fig. 1 |
| IEC 132 | 265 | 230 | 5.0 | 300 | M12 | 38 | 80 | 41.3 | 10 | Fig. 1 |
| IEC 160 | 300 | 250 | 6.0 | 350 | M16 | 42 | 110 | 45.3 | 12 | Fig. 1 |
| IEC 180 | 300 | 250 | 6.0 | 350 | M16 | 48 | 110 | 51.8 | 14 | Fig. 1 |
| IEC 200 | 350 | 300 | 6.0 | 400 | M16 | 55 | 110 | 59.3 | 16 | Fig. 1 |
| IEC 225 | 400 | 350 | 6.0 | 450 | M16 | 60 | 140 | 64.4 | 18 | Fig. 2 |
| IEC 250 | 500 | 450 | 6.0 | 550 | M16 | 65 | 140 | 69.4 | 18 | Fig. 2 |
| IEC 280 | 500 | 450 | 6.0 | 550 | M16 | 75 | 140 | 79.9 | 20 | Fig. 2 |
| IEC 315 | 600 | 550 | 7.0 | 660 | M20 | 80 | 170 | 85.4 | 22 | Fig. 2 |

**CC Dimension (mm)**

| Unit | IEC 63 | IEC71 | IEC 80 | IEC 90 | IEC 100 | IEC 112 | IEC 132 | IEC 160 | IEC 180 | IEC 200 | IEC 225 | IEC 250 | IEC 280 | IEC 315 |
|---|---|---|---|---|---|---|---|---|---|---|---|---|---|---|
| SK 62 | - | - | - | - | 127 | 127 | 177 | 266 | 266 | 229 | 303 | 303.5 | 303.5 | - |
| SK 63 | - | - | - | 109 | 133 | 133 | 190 | 194 | 194 | - | - | - | - | - |
| SK 63/22 | - | 88 | 107 | 107 | 124 | 124 | 194 | - | - | - | - | - | - | - |
| SK 63/23 | 85 | 89 | 105 | 105 | 130 | 130 | - | - | - | - | - | - | - | - |
| SK 72 | - | - | - | - | 127 | 127 | 177 | 266 | 266 | 229 | 303 | 303.5 | 303.5 | - |
| SK 73 | - | - | - | - | 127 | 127 | 177 | 266 | 266 | 229 | 303 | 303.5 | 303.5 | - |
| SK 73/22 | - | 88 | 107 | 107 | 124 | 124 | 194 | - | - | - | - | - | - | - |
| SK 73/23 | 85 | 89 | 105 | 105 | 130 | 130 | - | - | - | - | - | - | - | - |
| SK 73/32 | - | 88 | 107 | 107 | 124 | 124 | 194 | - | - | - | - | - | - | - |
| SK 82 | - | - | - | - | - | - | 177 | 266 | 266 | 229 | 303 | 303.5 | 304 | 381.5 |
| SK 83 | - | - | - | - | 127 | 127 | 177 | 266 | 266 | 229 | 303 | 303.5 | 303.5 | - |
| SK 83/32 | - | 88 | 107 | 107 | 124 | 124 | 194 | - | - | - | - | - | - | - |
| SK 83/33N | 85 | 89 | 105 | 105 | 130 | 130 | - | - | - | - | - | - | - | - |
| SK 83/42 | - | - | - | 109 | 133 | 133 | 190 | 194 | 194 | - | - | - | - | - |
| SK 92 | - | - | - | - | - | - | 177 | 266 | 266 | 229 | 303 | 303.5 | 304 | 381.5 |
| SK 93 | - | - | - | - | 127 | 127 | 177 | 266 | 266 | 229 | 303 | 303.5 | 303.5 | - |
| SK 93/42 | - | - | - | 109 | 133 | 133 | 190 | 194 | 194 | - | - | - | - | - |
| SK 93/43 | - | 88 | 107 | 107 | 124 | 124 | 194 | - | - | - | - | - | - | - |
| SK 93/52 | - | - | - | 109 | 133 | 133 | 190 | 194 | 194 | - | - | - | - | - |
| SK 102 | - | - | - | - | - | - | 177 | 266 | 266 | 229 | 303 | 303.5 | 304 | 381.5 |
| SK 103 | - | - | - | - | - | - | 177 | 266 | 266 | 229 | 303 | 303.5 | 304 | 381.5 |
| SK 103/52 | - | - | - | 109 | 133 | 133 | 190 | 194 | 194 | - | - | - | - | - |
| SK 103/53 | - | 88 | 107 | 107 | 124 | 124 | 194 | - | - | - | - | - | - | - |


Send Quote Requests to info@automatedpt.com
Call +1(800)985-6929 To Order or Order Online At Nordgearmotors.com

Send Quote Requests to info@automatedpt.com
Call +1(800)985-6929 To Order or Order Online At Nordgearmotors.com

# Foot & Flange
# XZ & XF

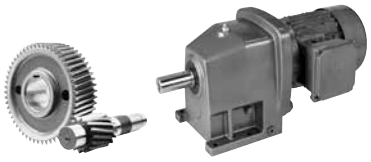

DRIVESYSTEMS



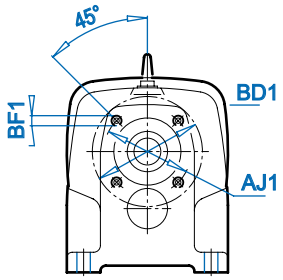


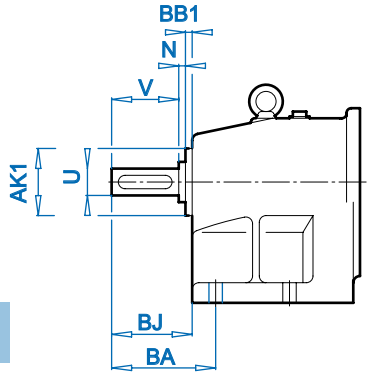


**XZ = B14**

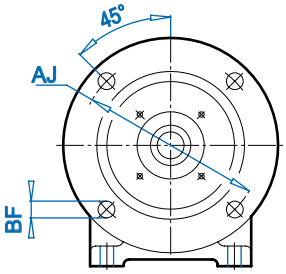


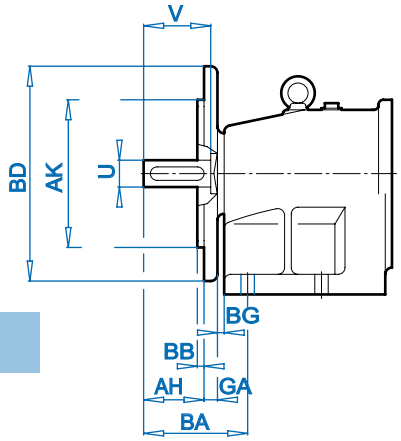


**XF = B5**

ALTERNATE SHAFTS SEE PAGE 239

| Type | XZ Mounting dimensions | | | | | | | XF Mounting dimensions | | | | | | | | | Shaft dimensions | | |
|---|---|---|---|---|---|---|---|---|---|---|---|---|---|---|---|---|---|---|---|
| | AJ1 | AK1 | BA | BB1 | BD1 | BF1 | BJ | AH | AJ | AK | BA | BB | BD | BF | BG | GA | U | V | N |
| SK 02 X.<br>SK 03 X. | 2.84 | 2.165 | 1.97 | 0.32 | 3.54 | 4 x M8 | 1.58 | 0.99 | 5.12 | 4.331 | 1.97 | 0.14 | 6.30 | 0.35 | 0.20 | 0.39 | 0.750 | 1.50 | .118 |
| SK 12 X.<br>SK 13 X. | 3.15 | 2.362 | 3.22 | 0.35 | 3.74 | 4 x M8 | 2.52 | 1.85 | 6.50 | 5.118 | 3.22 | 0.14 | 7.87 | 0.43 | 0.20 | 0.47 | 1.000 | 2.13 | .157 |
| SK 22 X.<br>SK 23 X. | 3.94 | 2.835 | 3.30 | 0.39 | 5.12 | 4 x M12 | 2.71 | 1.89 | 8.47 | 7.087 | 3.30 | 0.16 | 9.84 | 0.55 | 0.20 | 0.63 | 1.250 | 2.75 | .197 |
| SK 32 X.<br>SK 33N X. | 4.72 | 3.543 | 3.88 | 0.43 | 5.91 | 4 x M16 | 3.21 | 2.23 | 10.43 | 9.055 | 3.88 | 0.16 | 11.81 | 0.55 | 0.20 | 0.79 | 1.625 | 3.25 | .236 |
| SK 42 X.<br>SK 43 X. | 5.32 | 4.133 | 5.07 | 0.55 | 6.50 | 4 x M16 | 4.13 | 3.15 | 10.43 | 9.055 | 5.07 | 0.16 | 11.81 | 0.55 | 0.20 | 0.79 | 1.875 | 3.50 | .236 |
| SK 52 X.<br>SK 53 X. | 6.50 | 5.276 | 5.18 | 0.75 | 7.87 | 4 x M16 | 4.40 | 3.41 | 11.81 | 9.843 | 5.18 | 0.20 | 13.78 | 0.71 | 0.20 | 0.79 | 2.250 | 4.00 | .236 |


Send Quote Requests to info@automatedpt.com
Call +1(800)985-6929 To Order or Order Online At Nordgearmotors.com

DRIVESYSTEMS

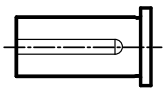

# Solid Shaft Dimensions



## Solid Shaft Dimesions

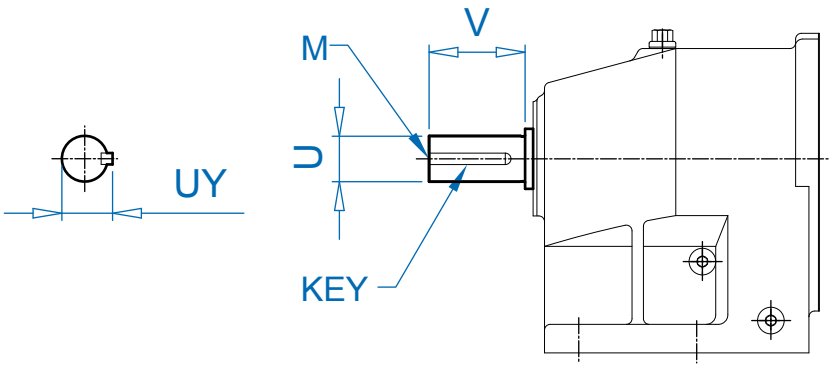


| UNIT | U | DIAMETER TOLERANCE | V | UY | KEY SIZE w x h x l | KEY QTY | DRILL & TAP M |
|---|---|---|---|---|---|---|---|
| **SK 11E/EF** | 0.750 | +0.0000 / -0.0005 | 1.50 | 0.83 | 3/16 x 3/16 x 1 | 1 | 1/4-20 |
| | 20mm | +0.015 / +0.002mm | 40mm | 22.5mm | 6 x 6 x 32mm | 1 | M6 |
| **SK 21E/EF** | 1.000 | +0.0000 / -0.0005 | 2.13 | 1.11 | 1/4 x 1/4 x 1-5/8 | 1 | 3/8-16 |
| | 25mm | +0.015 / +0.002mm | 50mm | 28.0mm | 8 x 7 x 40mm | 1 | M10 |
| **SK 31E/EF** | 1.250 | +0.0000 / -0.0005 | 2.75 | 1.36 | 1/4 x 1/4 x 2-1/4 | 1 | 1/2-13 |
| | 30mm | +0.015 / +0.002mm | 60mm | 33.0mm | 8 x 7 x 50mm | 1 | M10 |
| **SK 41E/EF** | 1.375 | +0.0000 / -0.0005 | 3.00 | 1.51 | 5/16 x 5/16 x 2-1/8 | 1 | 5/8-11 |
| | 35mm | +0.018 / +0.002mm | 70mm | 38.0mm | 10 x 8 x 56mm | 1 | M12 |
| **SK 51E/EF** | 1.625 | +0.0000 / -0.0005 | 3.25 | 1.79 | 3/8 x 3/8 x 2-1/2 | 1 | 5/8-11 |
| | 40mm | +0.018 / +0.002mm | 80mm | 43.0mm | 12 x 8 x 70mm | 1 | M16 |
| **SK 02/F** | 0.750 | +0.0000 / -0.0005 | 1.50 | 0.83 | 3/16 x 3/16 x 1 | 1 | 1/4-20 |
| **SK 03/F** | 20mm | +0.015 / +0.002mm | 40mm | 22.5mm | 6 x 6 x 32mm | 1 | M6 |
| **SK 12/F** | 1.000 | +0.0000 / -0.0005 | 2.13 | 1.11 | 1/4 x 1/4 x 1-5/8 | 1 | 3/8-16 |
| **SK 13/F** | 25mm | +0.015 / +0.002mm | 50mm | 28.0mm | 8 x 7 x 40mm | 1 | M10 |
| **SK 22/F** | 1.250 | +0.0000 / -0.0005 | 2.75 | 1.36 | 1/4 x 1/4 x 2-1/4 | 1 | 1/2-13 |
| **SK 23/F** | 30mm | +0.015 / +0.002mm | 60mm | 33.0mm | 8 x 7 x 50mm | 1 | M10 |
| **SK 32/F** | 1.625 | +0.0000 / -0.0005 | 3.25 | 1.79 | 3/8 x 3/8 x 2-1/2 | 1 | 5/8-11 |
| **SK 33N/F** | 40mm | +0.018 / +0.002mm | 80mm | 43.0mm | 12 x 8 x 70mm | 1 | M16 |
| **SK 42/F** | 1.875 | +0.0000 / -0.0010 | 3.50 | 2.09 | 1/2 x 1/2 x 2-3/4 | 1 | 5/8-11 |
| **SK 43/F** | 45mm | +0.018 / +0.002mm | 90mm | 48.5mm | 14 x 9 x 80mm | 1 | M16 |
| **SK 52/F** | 2.250 | +0.0000 / -0.0010 | 4.00 | 2.47 | 1/2 x 1/2 x 3-1/4 | 1 | 3/4-10 |
| **SK 53/F** | 55mm | +0.030 / +0.011mm | 110mm | 59.0mm | 16 x 10 x 90mm | 1 | M20 |
| **SK 62/F** | 2.500 | +0.0000 / -0.0010 | 5.00 | 2.77 | 5/8 x 5/8 x 4 | 1 | 3/4-10 |
| **SK 63/F** | 65mm | +0.030 / +0.011mm | 130mm | 69.0mm | 18 x 11 x 100mm | 1 | M20 |
| **SK 72/F** | 3.000 | +0.0000 / -0.0010 | 5.50 | 3.33 | 3/4 x 3/4 x 4-1/2 | 1 | 3/4-10 |
| **SK 73/F** | 75mm | +0.030 / +0.011mm | 140mm | 79.5mm | 20 x 12 x 125mm | 1 | M20 |
| **SK 82/F** | 3.500 | +0.0000 / -0.0010 | 6.75 | 3.88 | 7/8 x 7/8 x 5-1/2 | 1 | 3/4-10 |
| **SK 83/F** | 90mm | +0.035 / +0.013mm | 170mm | 95.0mm | 25 x 14 x 140mm | 1 | M24 |
| **SK 92/F** | 4.250 | +0.0000 / -0.0010 | 8.50 | 4.69 | 1 x 1 x 7-1/4 | 1 | 1-8 |
| **SK 93/F** | 110mm | +0.035 / +0.013mm | 210mm | 116mm | 28 x 16 x 180mm | 1 | M24 |
| **SK 102/F** | 5.250 | +0.0000 / -0.0010 | 10.00 | 5.80 | 1-1/4 x 1-1/4 x 8-3/8 | 1 | 1-8 |
| **SK 103/F** | 130mm | +0.040 / +0.015mm | 250mm | 137mm | 32 x 18 x 220mm | 1 | M24 |

- Dimensions are in inches unless otherwise noted.
- Metric Keys are captured in keyways.
- For shaft sizes not shown, consult NORD.


Send Quote Requests to info@automatedpt.com
Call +1(800)985-6929 To Order or Order Online At Nordgearmotors.com

# Notes

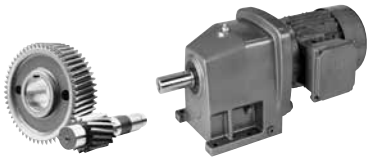

NORD DRIVESYSTEMS

NOTES


Send Quote Requests to info@automatedpt.com
Call +1(800)985-6929 To Order or Order Online At Nordgearmotors.com

Send Quote Requests to info@automatedpt.com
Call +1(800)985-6929 To Order or Order Online At Nordgearmotors.com

# Clincher™ Shaft Mount Gearmotors

## Selection

- Order Form
- Unit Examples
- 0.16 hp
- 0.25 hp
- 0.33 hp
- 0.50 hp
- 0.75 hp
- 1.0 hp
- 1.5 hp
- 2.0 hp
- 3.0 hp
- 5.0 hp
- 7.5 hp
- 10 hp
- 15 hp
- 20 hp
- 25 hp
- 30 hp
- 40 hp
- 50 hp
- 60 hp
- 75 hp
- 100 hp
- 125 hp
- 150 hp
- 175 hp
- 200 hp

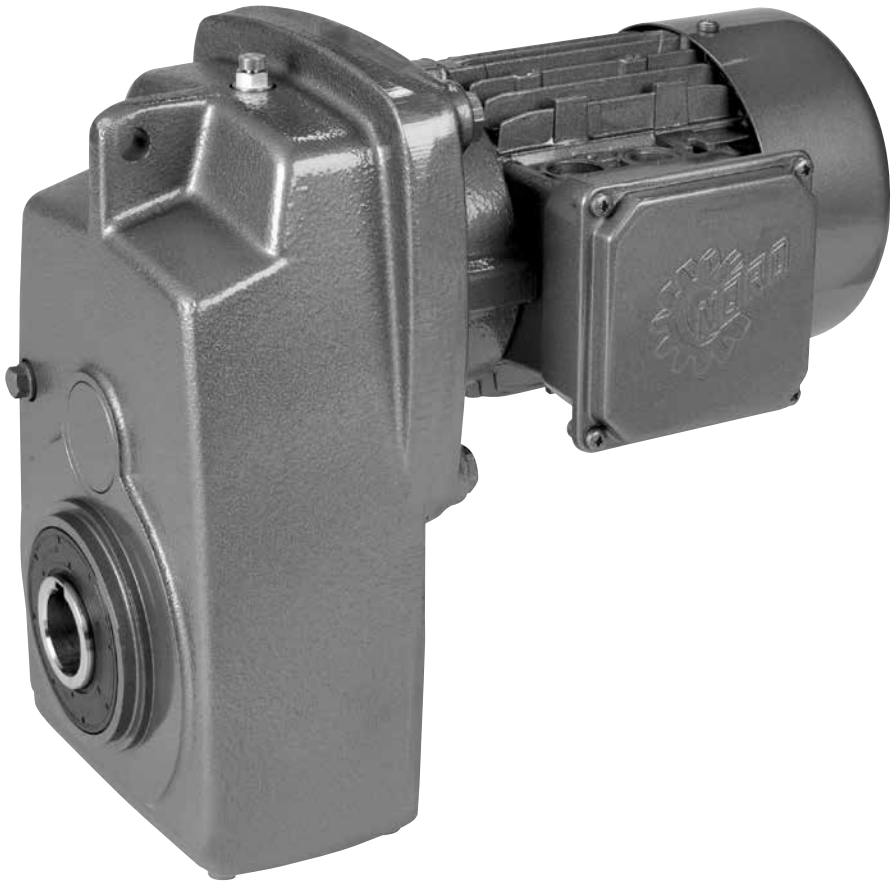

NORD® DRIVESYSTEMS

UNICASE™

www.nord.com

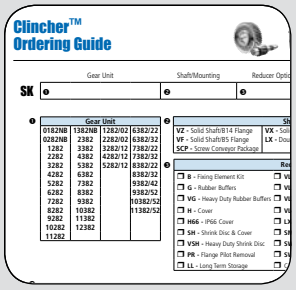


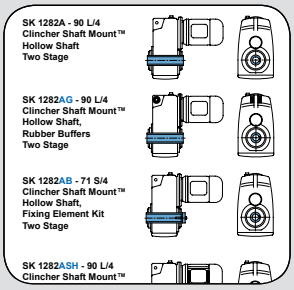


| Motor Power | Output Speed | Output Torque | Service Factor | AGMA Class | Gear Ratio | Standard Bearings | |
|---|---|---|---|---|---|---|---|
| $P_n$ | $n_2$ | $T_a$ | $F_s$ | | $i_{tot}$ | $F_{ON}$ OHL | $F_{AN}$ Thrust |
| [hp] | [rpm] | [lb-in] | | | | [lb] | [lb] |
| 0.16 | 401 | 25 | 18.9 | III | 4.24 | 518 | 824 |
| | 318 | 32 | 18.8 | III | 5.34 | 558 | 909 |
| | 268 | 38 | 18.8 | III | 6.35 | 590 | 979 |
| | 234 | 43 | 16.8 | III | 7.26 | 617 | 1037 |
| | 197 | 52 | 16.8 | III | 8.64 | 653 | 1114 |
| | 179 | 57 | 16.8 | III | 9.49 | 671 | 1148 |
| | 146 | 70 | 14.0 | III | 11.66 | 718 | 1148 |
| | 123 | 83 | 11.8 | III | 13.84 | 758 | 1148 |
| | 103 | 99 | 9.0 | III | 16.53 | 803 | 1148 |
| | 114 | 89 | 7.5 | III | 14.92 | 774 | 1148 |
| | 90 | 112 | 7.5 | III | 18.79 | 835 | 1148 |
| | 76 | 133 | 7.2 | III | 22.35 | 882 | 1148 |
| | 69 | 146 | 7.0 | III | 24.55 | 907 | 1148 |
| | 58 | 174 | 5.6 | III | 29.13 | 959 | 1148 |
| | 53 | 190 | 4.4 | III | 31.81 | 983 | 1148 |
| | 49 | 208 | 4.4 | III | 34.80 | 1013 | 1148 |
| | 45 | 225 | 3.9 | III | 37.73 | 1037 | 1148 |
| | 41 | 250 | 3.0 | III | 41.85 | 1069 | 1148 |
| | 34 | 296 | 3.0 | III | 49.65 | 1125 | 1148 |
| | 29 | 354 | 2.8 | III | 59.33 | 1125 | 1148 |
| | 21 | 487 | 1.2 | I | 81.71 | 1125 | 1148 |

Send Quote Requests to info@automatedpt.com
Call +1(800)985-6929 To Order or Order Online At Nordgearmotors.com

# Clincher™ Ordering Guide

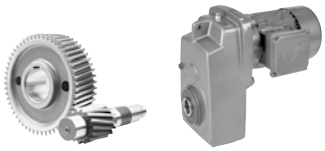

DRIVESYSTEMS

| | Gear Unit | Shaft/Mounting | Reducer Options | | Motor/Input | Motor Options |
|---|---|---|---|---|---|---|
| **SK** | ❶ | ❷ | ❸ | - | ❹ | |
| | | | | | see page 690 | see page 690 |



❶

| Gear Unit | | | |
|---|---|---|---|
| 0182NB | 1382NB | 1282/02 | 6382/22 |
| 0282NB | 2382 | 2282/02 | 6382/32 |
| 1282 | 3382 | 3282/12 | 7382/22 |
| 2282 | 4382 | 4282/12 | 7382/32 |
| 3282 | 5382 | 5282/12 | 8382/22 |
| 4282 | 6382 | | 8382/32 |
| 5282 | 7382 | | 9382/42 |
| 6282 | 8382 | | 9382/52 |
| 7282 | 9382 | | 10382/52 |
| 8282 | 10382 | | 11382/52 |
| 9282 | 11382 | | |
| 10282 | 12382 | | |
| 11282 | | | |

❷

| Shaft/Mounting | | |
|---|---|---|
| **VZ -** Solid Shaft/B14 Flange | **VX -** Solid Shaft/Foot | **AZ** - Hollow Shaft/B14 Flange |
| **VF -** Solid Shaft/B5 Flange | **LX -** Double Solid Shaft/Foot | **AF** - Hollow Shaft/B5 Flange |
| **SCP -** Screw Conveyor Package | | **AX** - Hollow Shaft/Foot |

❸

| Reducer Options | | |
|---|---|---|
| ❒ **B -** Fixing Element Kit | ❒ **VL -** Heavy Duty Output Bearings | ❒ **VI -** Fluoro-rubber Seals |
| ❒ **G -** Rubber Buffers | ❒ **VL2 -** Spread Bearing Design | ❒ **OSG -** Oil Sight Glass |
| ❒ **VG -** Heavy Duty Rubber Buffers | ❒ **VL3 -** Oil Safe Spread Bearing Design | ❒ **OA -** Oil Expansion Chamber |
| ❒ **H -** Hollow Shaft Cover | ❒ **VL4-** Drywell Drop Bearing Design | ❒ **OC -** Oil Cooler |
| ❒ **H66 -** IP66 Hollow Shaft Cover | ❒ **LX-** Double Solid Shaft | ❒ **WC -** Water Cooling Cover |
| ❒ **SH -** Shrink Disc & Cover | ❒ **SM5 -** Stainless Steel Output Shaft | ❒ **OT -** Oil Reservoir Tank |
| ❒ **VSH -** Heavy Duty Shrink Disc & Cover | ❒ **SWA -** Special Hollow Shaft | ❒ **MDP -** Magnetic Drain Plug |
| ❒ **PR -** Flange Pilot Removal | ❒ **SWV -** Special Solid Shaft | ❒ **ADP -** Additional Drain Plug |
| ❒ **LL -** Long Term Storage | ❒ Cross Drilled Shaft | |

❹

| Input Shaft | NEMA Adapter | IEC | Integral Motors | | Integral Energy Efficent Motors | | Scoop | Motor Platform | Servo Adapter (Keyed) |
|---|---|---|---|---|---|---|---|---|---|
| W | N56C | IEC 63 | 63S/4 - 0.16hp | 160L/4 - 20hp | 80LH/4 - 1hp | 200LH/4 - 40hp | S56 | MKN056 | SEP 100 |
| | N140TC | IEC 71 | 63L/4 - 0.25hp | 180MX/4 - 25hp | 90SH/4 - 1.5hp | 225SH/4 - 50hp | S140T | MKN140 | SEP 130 |
| | N180TC | IEC 80 | 71S/4 - 0.33hp | 180LX/4 - 30hp | 90LH/4 - 2hp | 225MH/4 - 60hp | S180T | MKN180 | SEP 165 |
| | N210TC | IEC 90 | 71L/4 - 0.50hp | 200L/4 - 40hp | 100LH/4 - 3hp | 250MH/4 - 75hp | S210T | MKN210 | SEP 215 |
| | N250TC | IEC 100 | 80S/4 - 0.75hp | 225S/4 - 50hp | 112MH/4 - 5hp | 280SH/4 - 100hp | S250T | MKN250 | SEP 300 |
| | N280TC | IEC 112 | 80L/4 - 1hp | 225M/4 - 60hp | 132SH/4 - 7.5hp | 280MH/4 - 125hp | S280T | MKN280 | Servo Adapter (Clamp) |
| | N320TC | IEC 132 | 90S/4 - 1.5hp | 250M/4 - 75hp | 132MH/4 - 10hp | 315SH/4 - 150hp | S320T | MKN320 | |
| | N360TC | IEC 160 | 90L/4 - 2hp | 280S/4 - 100hp | 160MH/4 - 15hp | 315MH/4 - 175hp | S360T | MKN360 | SEK 100 |
| | N400TC | IEC 180 | 100L/4 - 3hp | 280M/4 - 125hp | 160LH/4 - 20hp | 315MAH/4 - 200hp | S400T | MKN400 | SEK 130 |
| | | IEC 200 | 100LA/4 - 5hp | 315S/4 - 150hp | 180MH/4 - 25hp | 315LH/4 - 250hp | | | SEK 165 |
| | | IEC 225 | 112M/4 - 5.4hp | 315M/4 - 175hp | 180LH/4 - 30hp | | | | SEK 215 |
| | | IEC 250 | 132S/4 - 7.5hp | 315MA/4 - 200hp | | | | | SEK 300 |
| | | IEC 280 | 132M/4 - 10hp | 315L/4 - 250hp | | | | | |
| | | IEC 315 | 160M/4 - 15hp | Other Speeds Available | | Other Speeds Available | | | |

## Product Specifications

**Ratio**

_____ :1

see pages 244 - 288

__ OR __

**Output Speed**

_____ rpm

see pages 244 - 288

**Mounting Position**

- ❍ M1
- ❍ M2
- ❍ M3
- ❍ M4
- ❍ M5
- ❍ M6
- ❍ Special _____

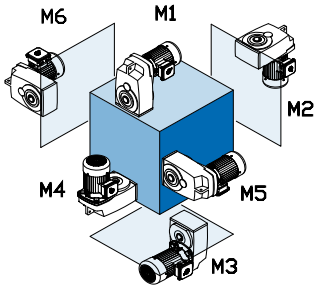


**Paint**

- ❍ Standard Stainles Steel Paint
- ❍ NSD+ (gray)
- ❍ NSD+W (white)
- ❍ NSD-X3 (gray)
- ❍ NSD-X3W (white)
- ❍ Casting Primed
- ❍ Special _____

**Lubricant**

- ❍ Standard
- ❍ Synthetic
- ❍ Food Grade
- ❍ Other _____

**Hollow Shaft Diameter** (If required)

see pages 388 - 393

**B5 Flange Diameter** (If required)

**SCP Drive Shaft Diameter** (If required)

see page 29

## Gearmotor Only Details

**Voltage & Frequency**

- ❍ 230/460V-60Hz (460V only ≥ 40 hp)
- ❍ 575V-60Hz
- ❍ 208V-60Hz
- ❍ 400V-50Hz
- ❍ 115/230V-60Hz, 1 ph.
- ❍ Other _____

**Terminal Box Pos.**

- ❍ TB1
- ❍ TB2
- ❍ TB3
- ❍ TB4

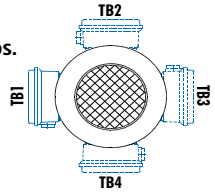


Mtg. Pos. M1 Shown

**Conduit Entry Loc.**

- ❍ CE I *
- ❍ CE II
- ❍ CE III *
- ❍ CE IV

* Brakemotor

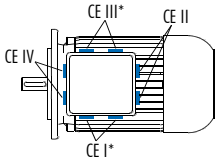


Mtg. Pos. M1 Shown


Send Quote Requests to info@automatedpt.com
Call +1(800)985-6929 To Order or Order Online At Nordgearmotors.com

DRIVESYSTEMS



# Unit Examples



## Examples of Clincher Shaft Mount™ with Solid Shaft Design

**SK 1282V - 90 L/4**
**Clincher Shaft Mount™**
**Solid Shaft**
**Two Stage**

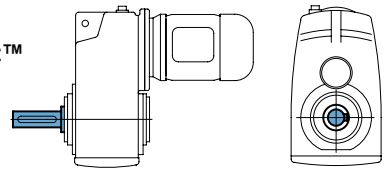

**SK 1282 VZ - 90 L/4**
**Clincher Shaft Mount™**
**Solid Shaft, B14 Flange**
**Two Stage**

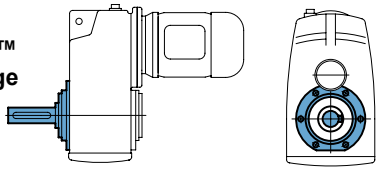

**SK 1282 VF - 90 L/4**
**Clincher Shaft Mount™**
**Solid Shaft, B5 Flange**
**Two Stage**

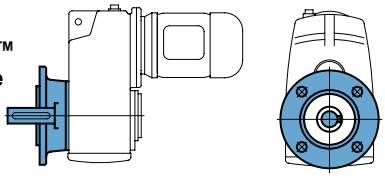

**SK 1282 VX - 90 L/4**
**Clincher Shaft Mount™**
**Solid Shaft, Foot Mounted**
**Housing, Two Stage**

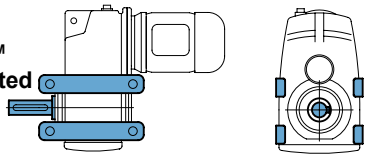

## Examples of Clincher Shaft Mount™ with Hollow Shaft Design

**SK 1282A - 90 L/4**
**Clincher Shaft Mount™**
**Hollow Shaft**
**Two Stage**

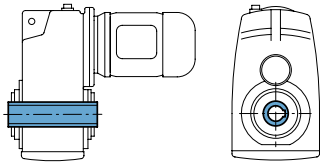

**SK 1282AG - 90 L/4**
**Clincher Shaft Mount™**
**Hollow Shaft,**
**Rubber Buffers**
**Two Stage**

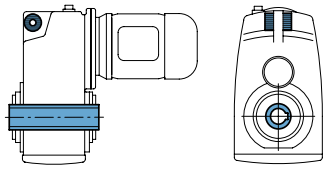

**SK 1282AB - 71 S/4**
**Clincher Shaft Mount™**
**Hollow Shaft,**
**Fixing Element Kit**
**Two Stage**

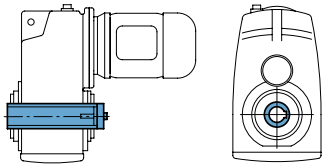

**SK 1282ASH - 90 L/4**
**Clincher Shaft Mount™**
**Hollow Shaft, Shrink Disc,**
**Shrink Disc Cover**
**Two Stage**

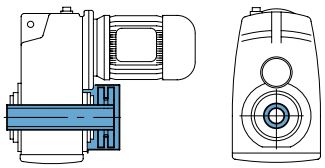

**SK 1282AZ - 90 L/4**
**Clincher Shaft Mount™**
**Hollow Shaft, B14 Flange**
**Two Stage**

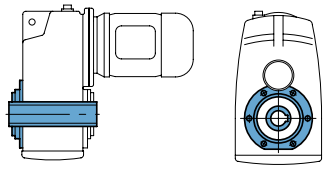

**SK 1282AF - 90 L/4**
**Clincher Shaft Mount™**
**Hollow Shaft, B5 Flange**
**Two Stage**

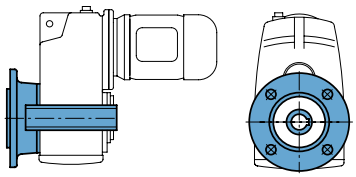

**SK 1282AX - 90 L/4**
**Clincher Shaft Mount™**
**Hollow Shaft,**
**Foot Mounted Housing**
**Two Stage**

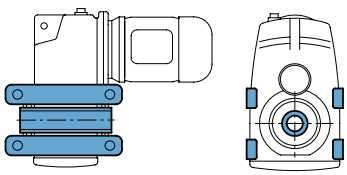

**SK 1282AXSH - 80 L/4**
**Clincher Shaft Mount™**
**Hollow Shaft, Shrink Disc,**
**Shrink Disc Cover,**
**Foot Mounted Housing**
**Two Stage**

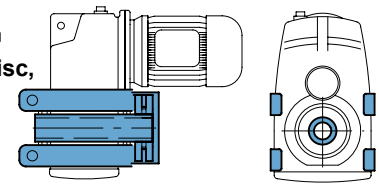


Send Quote Requests to info@automatedpt.com
Call +1(800)985-6929 To Order or Order Online At Nordgearmotors.com

# 0.16 hp Gearmotors



DRIVESYSTEMS



| Motor Power $P_n$ [hp] | Output Speed $n_2$ [rpm] | Output Torque $T_a$ [lb-in] | Service Factor $f_B$ | AGMA Class | Gear Ratio $i_{tot}$ | Standard Bearings $F_{RN}$ OHL [lb] | Standard Bearings $F_{AN}$ Thrust [lb] | Heavy Duty Bearings (VL) $F_{RVL}$ OHL [lb] | Heavy Duty Bearings (VL) $F_{AVL}$ Thrust [lb] | Model Type | Weight [lb] | Dim. Page |
|---|---|---|---|---|---|---|---|---|---|---|---|---|
| 0.16 | 401 | 25 | 18.9 | III | 4.24 | 518 | 824 | 1125 | 1890 | SK 0182NB - 63S/4 | 17 | 312 |
| | 318 | 32 | 18.8 | III | 5.34 | 558 | 909 | 1125 | 1890 | | | |
| | 268 | 38 | 18.8 | III | 6.35 | 590 | 979 | 1125 | 1890 | | | |
| | 234 | 43 | 16.8 | III | 7.26 | 617 | 1037 | 1125 | 1890 | | | |
| | 197 | 52 | 16.8 | III | 8.64 | 653 | 1114 | 1125 | 1890 | | | |
| | 179 | 57 | 16.8 | III | 9.49 | 671 | 1148 | 1125 | 1890 | | | |
| | 146 | 70 | 14.0 | III | 11.66 | 718 | 1148 | 1125 | 1890 | | | |
| | 123 | 83 | 11.8 | III | 13.84 | 758 | 1148 | 1125 | 1890 | | | |
| | 103 | 99 | 9.0 | III | 16.53 | 803 | 1148 | 1125 | 1890 | | | |
| | 114 | 89 | 7.5 | III | 14.92 | 774 | 1148 | 1125 | 1890 | | | |
| | 90 | 112 | 7.5 | III | 18.79 | 835 | 1148 | 1125 | 1890 | | | |
| | 76 | 133 | 7.2 | III | 22.35 | 882 | 1148 | 1125 | 1890 | | | |
| | 69 | 146 | 7.0 | III | 24.55 | 907 | 1148 | 1125 | 1890 | | | |
| | 58 | 174 | 5.6 | III | 29.13 | 959 | 1148 | 1125 | 1890 | | | |
| | 53 | 190 | 4.4 | III | 31.81 | 983 | 1148 | 1125 | 1890 | | | |
| | 49 | 208 | 4.4 | III | 34.80 | 1013 | 1148 | 1125 | 1890 | | | |
| | 45 | 225 | 3.9 | III | 37.73 | 1037 | 1148 | 1125 | 1890 | | | |
| | 41 | 250 | 3.0 | III | 41.85 | 1069 | 1148 | 1125 | 1890 | | | |
| | 34 | 296 | 3.0 | III | 49.65 | 1125 | 1148 | 1125 | 1890 | | | |
| | 29 | 354 | 2.8 | III | 59.33 | 1125 | 1148 | 1125 | 1890 | | | |
| | 21 | 487 | 1.2 | I | 81.71 | 1125 | 1148 | 1125 | 1890 | | | |
| | 26 | 394 | 3.1 | III | 65.99 | 1197 | 1125 | 1658 | 1125 | SK 0282NB - 63S/4 | 26 | 318 |
| | 21 | 474 | 2.4 | III | 79.40 | 1193 | 1125 | 1656 | 1125 | | | |
| | 20 | 511 | 2.4 | III | 85.72 | 1190 | 1125 | 1654 | 1125 | | | |
| | 16 | 615 | 1.9 | II | 103.12 | 1181 | 1125 | 1647 | 1125 | | | |
| | 12 | 830 | 1.2 | I | 139.16 | 1159 | 1125 | 1634 | 1125 | | | |
| | 355 | 29 | 26.1 | III | 4.79 | 581 | 1053 | 1613 | 1609 | SK 1282 - 63S/4 | 39 | 330 |
| | 311 | 33 | 25.3 | III | 5.47 | 605 | 1116 | 1676 | 1609 | | | |
| | 264 | 38 | 24.4 | III | 6.43 | 639 | 1199 | 1760 | 1609 | | | |
| | 235 | 43 | 23.5 | III | 7.24 | 664 | 1260 | 1825 | 1609 | | | |
| | 207 | 49 | 26.1 | III | 8.21 | 693 | 1328 | 1895 | 1609 | | | |
| | 206 | 49 | 22.6 | III | 8.24 | 693 | 1328 | 1897 | 1609 | | | |
| | 185 | 55 | 24.4 | III | 9.18 | 720 | 1395 | 1958 | 1609 | | | |
| | 164 | 62 | 23.5 | III | 10.34 | 747 | 1467 | 2030 | 1609 | | | |
| | 145 | 70 | 22.6 | III | 11.76 | 781 | 1546 | 2108 | 1609 | | | |
| | 120 | 84 | 22.1 | III | 14.11 | 826 | 1609 | 2174 | 1609 | | | |
| | 99 | 103 | 19.3 | III | 17.21 | 880 | 1609 | 2174 | 1609 | | | |
| | 83 | 123 | 16.2 | III | 20.57 | 934 | 1609 | 2174 | 1609 | | | |
| | 67 | 150 | 13.2 | III | 25.22 | 997 | 1609 | 2174 | 1609 | | | |
| | 60 | 169 | 11.8 | III | 28.33 | 1037 | 1609 | 2174 | 1609 | | | |
| | 53 | 191 | 10.6 | III | 32.08 | 1080 | 1609 | 2174 | 1609 | | | |
| | 37 | 276 | 6.3 | III | 46.19 | 1206 | 1609 | 2171 | 1609 | | | |
| | 31 | 330 | 6.3 | III | 55.39 | 1278 | 1609 | 2171 | 1609 | | | |
| | 26 | 395 | 6.0 | III | 66.23 | 1350 | 1609 | 2171 | 1609 | | | |
| | 21 | 484 | 5.4 | III | 81.17 | 1436 | 1609 | 2169 | 1609 | | | |
| | 18 | 552 | 3.7 | III | 92.48 | 1496 | 1609 | 2167 | 1609 | | | |
| | 16 | 653 | 2.8 | III | 109.50 | 1557 | 1609 | 2162 | 1609 | | | |
| | 16 | 633 | 5.2 | III | 106.08 | 1625 | 1609 | 1800 | 2363 | SK 1382NB - 63S/4 | 52 | 324 |
| | 14 | 705 | 4.6 | III | 118.16 | 1620 | 1609 | 1800 | 2363 | | | |
| | 12 | 815 | 4.0 | III | 136.60 | 1616 | 1609 | 1800 | 2363 | | | |
| | 11 | 943 | 3.5 | III | 158.12 | 1607 | 1609 | 1800 | 2363 | | | |
| | 8.3 | 1215 | 2.7 | III | 203.60 | 1586 | 1609 | 1800 | 2363 | | | |
| | 6.6 | 1535 | 2.1 | III | 257.32 | 1557 | 1609 | 1800 | 2363 | | | |
| | 5.6 | 1801 | 1.8 | II | 301.82 | 1526 | 1609 | 1800 | 2363 | | | |
| | 4.5 | 2276 | 1.4 | II | 381.45 | 1454 | 1609 | 1800 | 2363 | | | |

(AGMA Class I = $f_B$ 1.0 - 1.39 II = $f_B$ 1.4 - 1.99 III = $f_B$ ≥ 2.0 * = $f_B$ < 1.0)


Send Quote Requests to info@automatedpt.com
Call +1(800)985-6929 To Order or Order Online At Nordgearmotors.com

NORD DRIVESYSTEMS

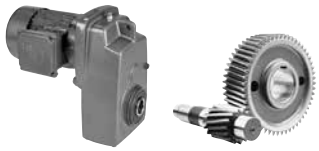

# 0.16 hp, 0.25 hp Gearmotors



| Motor Power $P_n$ [hp] | Output Speed $n_2$ [rpm] | Output Torque $T_2$ [lb-in] | Service Factor $f_B$ | AGMA Class | Gear Ratio $i_{tot}$ | Standard Bearings $F_{RN}$ OHL [lb] | Standard Bearings $F_{AN}$ Thrust [lb] | Heavy Duty Bearings (VL) $F_{RVL}$ OHL [lb] | Heavy Duty Bearings (VL) $F_{AVL}$ Thrust [lb] | Model Type | Weight [lb] | Dim. Page |
|---|---|---|---|---|---|---|---|---|---|---|---|---|
| **0.16** | 4.2 | 1614 | 1.6 | II | 405.75 | 1478 | 1609 | 2108 | 1609 | **SK 1282/02 - 63S/4** | 56 | 374 |
| | 3.1 | 2174 | 1.2 | I | 546.50 | 1400 | 1609 | 2052 | 1609 | | | |
| | 2.6 | 2640 | 1.0 | I | 663.69 | 1310 | 1609 | 1991 | 1609 | | | |
| | 2.1 | 3208 | 0.8 | * | 826.23 | 1161 | 1609 | 1899 | 1609 | | | |
| | 1.6 | 3208 | 0.8 | * | 1066.50 | 1161 | 1609 | 1899 | 1609 | | | |
| | 1.2 | 3208 | 0.8 | * | 1362.13 | 1161 | 1609 | 1899 | 1609 | | | |
| | 1 | 3208 | 0.8 | * | 1620.65 | 1161 | 1609 | 1899 | 1609 | | | |
| | 9.2 | 1104 | 4.2 | III | 185.11 | 2252 | 2700 | 3150 | 3375 | **SK 2382 - 63S/4** | 78 | 334 |
| | 7.2 | 1409 | 3.0 | III | 236.11 | 2237 | 2700 | 3139 | 3375 | | | |
| | 6.2 | 1648 | 3.0 | III | 276.27 | 2223 | 2700 | 3130 | 3375 | | | |
| | 5.1 | 1971 | 2.5 | III | 330.45 | 2201 | 2700 | 3114 | 3375 | | | |
| | 4.3 | 2332 | 2.0 | III | 390.93 | 2171 | 2700 | 3092 | 3375 | | | |
| | 3.5 | 2879 | 1.6 | II | 482.56 | 2115 | 2700 | 3053 | 3375 | | | |
| | 2.7 | 3717 | 1.2 | I | 623.10 | 2003 | 2700 | 2977 | 3375 | | | |
| | 2.2 | 4554 | 0.9 | * | 763.41 | 1854 | 2700 | 2878 | 3375 | | | |
| | 2.1 | 3280 | 1.4 | II | 824.77 | 2066 | 2700 | 3020 | 3375 | **SK 2282/02 - 63S/4** | 81 | 374 |
| | 1.6 | 4235 | 1.1 | I | 1064.71 | 1915 | 2700 | 2918 | 3375 | | | |
| | 1.2 | 5753 | 0.8 | * | 1423.06 | 1550 | 2700 | 2693 | 3375 | | | |
| | 0.98 | 5753 | 0.8 | * | 1728.15 | 1550 | 2700 | 2693 | 3375 | | | |
| | 4.2 | 2438 | 2.9 | III | 408.58 | 3659 | 3263 | 5121 | 4500 | **SK 3382 - 63S/4** | 114 | 338 |
| | 3.5 | 2879 | 2.7 | III | 482.56 | 3643 | 3263 | 5108 | 4500 | | | |
| | 2.9 | 3485 | 2.5 | III | 584.13 | 3616 | 3263 | 5090 | 4500 | | | |
| | 2.3 | 4335 | 1.9 | II | 726.61 | 3569 | 3263 | 5056 | 4500 | | | |
| | 2.1 | 4823 | 1.9 | II | 808.42 | 3537 | 3263 | 5033 | 4500 | | | |
| | 1.8 | 5483 | 1.3 | I | 919.00 | 3488 | 3263 | 5000 | 4500 | | | |
| | 1.7 | 6100 | 1.1 | I | 1022.42 | 3436 | 3263 | 4964 | 4500 | | | |
| | 1.6 | 4248 | 1.9 | II | 1067.99 | 3573 | 3263 | 5060 | 4500 | **SK 3282/12 - 63S/4** | 118 | 374 |
| | 1.3 | 5314 | 1.5 | II | 1335.98 | 3501 | 3263 | 5009 | 4500 | | | |
| | 1 | 6751 | 1.2 | I | 1697.29 | 3373 | 3263 | 4921 | 4500 | | | |
| | 2.4 | 2780 | 5.7 | III | 698.96 | 4959 | 4950 | 6905 | 6750 | **SK 4282/12 - 63S/4** | 151 | 374 |
| | 1.9 | 3473 | 4.6 | III | 873.31 | 4943 | 4950 | 6896 | 6750 | | | |
| | 1.5 | 4418 | 3.6 | III | 1110.82 | 4919 | 4950 | 6878 | 6750 | | | |
| | 1.3 | 5344 | 3.0 | III | 1343.53 | 4889 | 4950 | 6856 | 6750 | | | |
| **0.25** | 396 | 40 | 12.0 | III | 4.24 | 515 | 821 | 1125 | 1890 | **SK 0182NB - 63L/4** | 18 | 312 |
| | 315 | 51 | 11.8 | III | 5.34 | 556 | 909 | 1125 | 1890 | | | |
| | 265 | 61 | 11.8 | III | 6.35 | 587 | 974 | 1125 | 1890 | | | |
| | 231 | 69 | 10.5 | III | 7.26 | 612 | 1031 | 1125 | 1890 | | | |
| | 194 | 83 | 10.5 | III | 8.64 | 648 | 1112 | 1125 | 1890 | | | |
| | 177 | 91 | 10.5 | III | 9.49 | 666 | 1148 | 1125 | 1890 | | | |
| | 144 | 111 | 8.7 | III | 11.66 | 711 | 1148 | 1125 | 1890 | | | |
| | 121 | 132 | 7.4 | III | 13.84 | 752 | 1148 | 1125 | 1890 | | | |
| | 102 | 158 | 5.6 | III | 16.53 | 794 | 1148 | 1125 | 1890 | | | |
| | 113 | 143 | 4.7 | III | 14.92 | 765 | 1148 | 1125 | 1890 | | | |
| | 89 | 180 | 4.7 | III | 18.79 | 821 | 1148 | 1125 | 1890 | | | |
| | 75 | 214 | 4.5 | III | 22.35 | 869 | 1148 | 1125 | 1890 | | | |
| | 68 | 235 | 4.4 | III | 24.55 | 893 | 1148 | 1125 | 1890 | | | |
| | 58 | 278 | 3.5 | III | 29.13 | 943 | 1148 | 1125 | 1890 | | | |
| | 53 | 304 | 2.8 | III | 31.81 | 963 | 1148 | 1125 | 1890 | | | |
| | 48 | 333 | 2.7 | III | 34.80 | 990 | 1148 | 1125 | 1890 | | | |
| | 45 | 361 | 2.5 | III | 37.73 | 1010 | 1148 | 1125 | 1890 | | | |
| | 40 | 400 | 1.9 | II | 41.85 | 1040 | 1148 | 1125 | 1890 | | | |
| | 34 | 475 | 1.9 | II | 49.65 | 1091 | 1148 | 1125 | 1890 | | | |
| | 28 | 567 | 1.7 | II | 59.33 | 1125 | 1148 | 1125 | 1890 | | | |

(AGMA Class I = $f_B$ 1.0 - 1.39 II = $f_B$ 1.4 - 1.99 III = $f_B$ ≥ 2.0 * = $f_B$ < 1.0)


Send Quote Requests to info@automatedpt.com
Call +1(800)985-6929 To Order or Order Online At Nordgearmotors.com

# 0.25 hp Gearmotors



DRIVESYSTEMS



| Motor Power $P_n$ [hp] | Output Speed $n_2$ [rpm] | Output Torque $T_2$ [lb-in] | Service Factor $f_B$ | AGMA Class | Gear Ratio $i_{tot}$ | Standard Bearings $F_{RN}$ OHL [lb] | Standard Bearings $F_{AN}$ Thrust [lb] | Heavy Duty Bearings (VL) $F_{RVL}$ OHL [lb] | Heavy Duty Bearings (VL) $F_{AVL}$ Thrust [lb] | Model Type | Weight [lb] | Dim. Page |
|---|---|---|---|---|---|---|---|---|---|---|---|---|
| 0.25 | 25 | 631 | 2.0 | III | 65.99 | 1163 | 1125 | 1647 | 1125 | SK 0282NB - 63L/4 | 27 | 318 |
| | 21 | 759 | 1.5 | II | 79.40 | 1168 | 1125 | 1638 | 1125 | | | |
| | 20 | 819 | 1.5 | II | 85.72 | 1161 | 1125 | 1634 | 1125 | | | |
| | 16 | 986 | 1.2 | I | 103.12 | 1139 | 1125 | 1618 | 1125 | | | |
| | 351 | 46 | 16.3 | III | 4.79 | 578 | 1055 | 1616 | 1609 | SK 1282 - 63L/4 | 40 | 330 |
| | 307 | 52 | 15.8 | III | 5.47 | 605 | 1116 | 1681 | 1609 | | | |
| | 261 | 61 | 15.2 | III | 6.43 | 639 | 1199 | 1764 | 1609 | | | |
| | 232 | 69 | 14.7 | III | 7.24 | 664 | 1260 | 1832 | 1609 | | | |
| | 205 | 78 | 16.3 | III | 8.21 | 691 | 1325 | 1897 | 1609 | | | |
| | 204 | 79 | 14.1 | III | 8.24 | 691 | 1325 | 1899 | 1609 | | | |
| | 183 | 88 | 15.2 | III | 9.18 | 716 | 1388 | 1964 | 1609 | | | |
| | 162 | 99 | 14.7 | III | 10.34 | 745 | 1467 | 2032 | 1609 | | | |
| | 143 | 112 | 14.1 | III | 11.76 | 776 | 1544 | 2108 | 1609 | | | |
| | 119 | 135 | 13.8 | III | 14.11 | 824 | 1609 | 2174 | 1609 | | | |
| | 98 | 165 | 12.1 | III | 17.21 | 875 | 1609 | 2174 | 1609 | | | |
| | 82 | 197 | 10.1 | III | 20.57 | 927 | 1609 | 2174 | 1609 | | | |
| | 67 | 241 | 8.3 | III | 25.22 | 990 | 1609 | 2174 | 1609 | | | |
| | 59 | 271 | 7.4 | III | 28.33 | 1026 | 1609 | 2171 | 1609 | | | |
| | 52 | 307 | 6.6 | III | 32.08 | 1067 | 1609 | 2171 | 1609 | | | |
| | 36 | 442 | 3.9 | III | 46.19 | 1186 | 1609 | 2169 | 1609 | | | |
| | 30 | 529 | 3.9 | III | 55.39 | 1253 | 1609 | 2167 | 1609 | | | |
| | 25 | 633 | 3.8 | III | 66.23 | 1325 | 1609 | 2165 | 1609 | | | |
| | 21 | 776 | 3.4 | III | 81.17 | 1404 | 1609 | 2160 | 1609 | | | |
| | 18 | 884 | 2.3 | III | 92.48 | 1456 | 1609 | 2156 | 1609 | | | |
| | 15 | 1047 | 1.8 | II | 109.50 | 1523 | 1609 | 2147 | 1609 | | | |
| | 14 | 1129 | 2.9 | III | 118.16 | 1593 | 1609 | 1800 | 2363 | SK 1382NB - 63L/4 | 53 | 324 |
| | 12 | 1306 | 2.5 | III | 136.60 | 1580 | 1609 | 1800 | 2363 | | | |
| | 11 | 1511 | 2.2 | III | 158.12 | 1559 | 1609 | 1800 | 2363 | | | |
| | 8.3 | 1946 | 1.7 | II | 203.6 | 1505 | 1609 | 1800 | 2363 | | | |
| | 6.5 | 2460 | 1.3 | I | 257.32 | 1422 | 1609 | 1800 | 2363 | | | |
| | 5.6 | 2885 | 1.1 | I | 301.82 | 1332 | 1609 | 1800 | 2363 | | | |
| | 4.4 | 3646 | 0.9 | * | 381.45 | 1109 | 1609 | 1800 | 2363 | | | |
| | 5.1 | 2475 | 1.0 | I | 328.02 | 1343 | 1609 | 2014 | 1609 | SK 1282/02 - 63L/4 | 58 | 374 |
| | 4.1 | 3062 | 0.8 | * | 405.75 | 1204 | 1609 | 1924 | 1609 | | | |
| | 20 | 786 | 6.3 | III | 82.22 | 2261 | 2700 | 3157 | 3375 | SK 2382 - 63L/4 | 80 | 334 |
| | 17 | 940 | 5.3 | III | 98.35 | 2257 | 2700 | 3155 | 3375 | | | |
| | 14 | 1112 | 4.1 | III | 116.35 | 2250 | 2700 | 3148 | 3375 | | | |
| | 13 | 1260 | 3.7 | III | 131.86 | 2243 | 2700 | 3143 | 3375 | | | |
| | 11 | 1433 | 3.2 | III | 149.96 | 2237 | 2700 | 3139 | 3375 | | | |
| | 9.1 | 1769 | 2.6 | III | 185.11 | 2216 | 2700 | 3123 | 3375 | | | |
| | 7.1 | 2257 | 1.9 | II | 236.11 | 2178 | 2700 | 3096 | 3375 | | | |
| | 6.1 | 2641 | 1.9 | II | 276.27 | 2142 | 2700 | 3071 | 3375 | | | |
| | 5.1 | 3159 | 1.6 | II | 330.45 | 2081 | 2700 | 3031 | 3375 | | | |
| | 4.3 | 3737 | 1.2 | I | 390.93 | 2000 | 2700 | 2975 | 3375 | | | |
| | 3.5 | 4613 | 1.0 | I | 482.56 | 1841 | 2700 | 2871 | 3375 | | | |
| | 2.7 | 5956 | 0.8 | * | 623.10 | 1483 | 2700 | 2655 | 3375 | | | |
| | 3.3 | 3883 | 1.2 | I | 514.51 | 1978 | 2700 | 2959 | 3375 | SK 2282/02 - 63L/4 | 82 | 374 |
| | 2.5 | 5003 | 0.9 | * | 662.92 | 1753 | 2700 | 2815 | 3375 | | | |
| | 8.8 | 1823 | 4.2 | III | 190.69 | 3677 | 3263 | 5132 | 4500 | SK 3382 - 63L/4 | 115 | 338 |
| | 7.3 | 2206 | 4.0 | III | 230.83 | 3665 | 3263 | 5126 | 4500 | | | |
| | 5.9 | 2745 | 3.0 | III | 287.14 | 3647 | 3263 | 5112 | 4500 | | | |

(AGMA Class I = $f_B$ 1.0 - 1.39 II = $f_B$ 1.4 - 1.99 III = $f_B$ ≥ 2.0 * = $f_B$ < 1.0)


Send Quote Requests to info@automatedpt.com
Call +1(800)985-6929 To Order or Order Online At Nordgearmotors.com

DRIVESYSTEMS



# 0.25 hp, 0.33 hp Gearmotors



| Motor Power $P_n$ [hp] | Output Speed $n_2$ [rpm] | Output Torque $T_2$ [lb-in] | Service Factor $f_B$ | AGMA Class | Gear Ratio $i_{tot}$ | Standard Bearings $F_{RN}$ OHL [lb] | Standard Bearings $F_{AN}$ Thrust [lb] | Heavy Duty Bearings (VL) $F_{RVL}$ OHL [lb] | Heavy Duty Bearings (VL) $F_{AVL}$ Thrust [lb] | Model Type | Weight [lb] | Dim. Page |
|---|---|---|---|---|---|---|---|---|---|---|---|---|
| **0.25** | 4.1 | 3905 | 1.8 | II | 408.58 | 3593 | 3263 | 5074 | 4500 | **SK 3382 - 63L/4** | 115 | 338 |
| | 3.5 | 4613 | 1.7 | II | 482.56 | 3551 | 3263 | 5045 | 4500 | | | |
| | 2.9 | 5583 | 1.6 | II | 584.13 | 3479 | 3263 | 4993 | 4500 | | | |
| | 2.3 | 6945 | 1.2 | I | 726.61 | 3353 | 3263 | 4907 | 4500 | | | |
| | 2.1 | 7727 | 1.2 | I | 808.42 | 3265 | 3263 | 4847 | 4500 | | | |
| | 1.8 | 8784 | 0.8 | * | 919.00 | 3128 | 3263 | 4754 | 4500 | | | |
| | 1.6 | 8059 | 1.0 | I | 1067.99 | 3224 | 3263 | 4820 | 4500 | **SK 3282/12 - 63L/4** | 120 | 374 |
| | 1.3 | 10082 | 0.8 | * | 1335.98 | 2921 | 3263 | 4624 | 4500 | | | |
| | 4.9 | 2572 | 6.2 | III | 340.87 | 4961 | 4950 | 6908 | 6750 | **SK 4282/12 - 63L/4** | 153 | 374 |
| | 4.1 | 3093 | 5.1 | III | 409.92 | 4952 | 4950 | 6901 | 6750 | | | |
| | 3 | 4215 | 3.8 | III | 558.54 | 4925 | 4950 | 6883 | 6750 | | | |
| | 2.4 | 5274 | 3.0 | III | 698.96 | 4892 | 4950 | 6858 | 6750 | | | |
| | 1.9 | 6590 | 2.4 | III | 873.31 | 4840 | 4950 | 6822 | 6750 | | | |
| | 1.5 | 8382 | 1.9 | II | 1110.82 | 4750 | 4950 | 6757 | 6750 | | | |
| | 1.3 | 10139 | 1.6 | II | 1343.53 | 4637 | 4950 | 6678 | 6750 | | | |
| **0.33** | 403 | 52 | 9.2 | III | 4.24 | 509 | 812 | 1125 | 1890 | **SK 0182NB - 71S/4** | 21 | 312 |
| | 320 | 66 | 9.1 | III | 5.34 | 549 | 893 | 1125 | 1890 | | | |
| | 269 | 78 | 9.1 | III | 6.35 | 581 | 961 | 1125 | 1890 | | | |
| | 236 | 90 | 8.1 | III | 7.26 | 603 | 1015 | 1125 | 1890 | | | |
| | 198 | 107 | 8.1 | III | 8.64 | 637 | 1091 | 1125 | 1890 | | | |
| | 180 | 117 | 8.1 | III | 9.49 | 657 | 1136 | 1125 | 1890 | | | |
| | 147 | 144 | 6.8 | III | 11.66 | 700 | 1148 | 1125 | 1890 | | | |
| | 124 | 171 | 5.7 | III | 13.84 | 740 | 1148 | 1125 | 1890 | | | |
| | 103 | 204 | 4.3 | III | 16.53 | 779 | 1148 | 1125 | 1890 | | | |
| | 115 | 184 | 3.6 | III | 14.92 | 749 | 1148 | 1125 | 1890 | | | |
| | 91 | 232 | 3.6 | III | 18.79 | 803 | 1148 | 1125 | 1890 | | | |
| | 77 | 276 | 3.5 | III | 22.35 | 846 | 1148 | 1125 | 1890 | | | |
| | 70 | 303 | 3.4 | III | 24.55 | 871 | 1148 | 1125 | 1890 | | | |
| | 59 | 360 | 2.7 | III | 29.13 | 916 | 1148 | 1125 | 1890 | | | |
| | 54 | 393 | 2.1 | III | 31.81 | 938 | 1148 | 1125 | 1890 | | | |
| | 49 | 430 | 2.1 | III | 34.80 | 965 | 1148 | 1125 | 1890 | | | |
| | 45 | 466 | 1.9 | II | 37.73 | 983 | 1148 | 1125 | 1890 | | | |
| | 41 | 517 | 1.5 | II | 41.85 | 1006 | 1148 | 1125 | 1890 | | | |
| | 34 | 613 | 1.4 | II | 49.65 | 1058 | 1148 | 1125 | 1890 | | | |
| | 29 | 733 | 1.3 | I | 59.33 | 1103 | 1148 | 1125 | 1890 | | | |
| | 42 | 499 | 2.9 | III | 40.38 | 986 | 1125 | 1654 | 1125 | **SK 0282NB - 71S/4** | 30 | 318 |
| | 39 | 546 | 2.7 | III | 44.22 | 1010 | 1125 | 1652 | 1125 | | | |
| | 33 | 638 | 2.0 | III | 51.64 | 1055 | 1125 | 1647 | 1125 | | | |
| | 30 | 699 | 2.0 | III | 56.55 | 1082 | 1125 | 1643 | 1125 | | | |
| | 26 | 815 | 1.5 | II | 65.99 | 1127 | 1125 | 1634 | 1125 | | | |
| | 22 | 981 | 1.2 | I | 79.40 | 1141 | 1125 | 1618 | 1125 | | | |
| | 20 | 1059 | 1.2 | I | 85.72 | 1127 | 1125 | 1611 | 1125 | | | |
| | 17 | 1274 | 0.9 | * | 103.12 | 1091 | 1125 | 1584 | 1125 | | | |
| | 357 | 59 | 12.6 | III | 4.79 | 574 | 1042 | 1607 | 1609 | **SK 1282 - 71S/4** | 43 | 330 |
| | 313 | 68 | 12.2 | III | 5.47 | 599 | 1105 | 1672 | 1609 | | | |
| | 266 | 79 | 11.8 | III | 6.43 | 630 | 1179 | 1751 | 1609 | | | |
| | 236 | 89 | 11.4 | III | 7.24 | 657 | 1242 | 1814 | 1609 | | | |
| | 208 | 101 | 12.6 | III | 8.21 | 684 | 1314 | 1888 | 1609 | | | |
| | 208 | 102 | 10.9 | III | 8.24 | 684 | 1314 | 1888 | 1609 | | | |
| | 186 | 113 | 11.8 | III | 9.18 | 709 | 1373 | 1946 | 1609 | | | |
| | 165 | 128 | 11.4 | III | 10.34 | 736 | 1442 | 2016 | 1609 | | | |

(AGMA Class I = $f_B$ 1.0 - 1.39 II = $f_B$ 1.4 - 1.99 III = $f_B$ ≥ 2.0 * = $f_B$ < 1.0)


Send Quote Requests to info@automatedpt.com
Call +1(800)985-6929 To Order or Order Online At Nordgearmotors.com

# 0.33 hp Gearmotors



DRIVESYSTEMS



| Motor Power $P_n$ [hp] | Output Speed $n_2$ [rpm] | Output Torque $T_2$ [lb-in] | Service Factor $f_B$ | AGMA Class | Gear Ratio $i_{tot}$ | Standard Bearings $F_{RN}$ OHL [lb] | Standard Bearings $F_{AN}$ Thrust [lb] | Heavy Duty Bearings (VL) $F_{RVL}$ OHL [lb] | Heavy Duty Bearings (VL) $F_{AVL}$ Thrust [lb] | Model Type | Weight [lb] | Dim. Page |
|---|---|---|---|---|---|---|---|---|---|---|---|---|
| 0.33 | 145 | 145 | 10.9 | III | 11.76 | 765 | 1523 | 2095 | 1609 | SK 1282 - 71S/4 | 43 | 330 |
| | 121 | 174 | 10.7 | III | 14.11 | 812 | 1609 | 2174 | 1609 | | | |
| | 99 | 213 | 9.3 | III | 17.21 | 864 | 1609 | 2174 | 1609 | | | |
| | 83 | 254 | 7.8 | III | 20.57 | 914 | 1609 | 2174 | 1609 | | | |
| | 68 | 312 | 6.4 | III | 25.22 | 974 | 1609 | 2171 | 1609 | | | |
| | 60 | 350 | 5.7 | III | 28.33 | 1008 | 1609 | 2171 | 1609 | | | |
| | 53 | 396 | 5.1 | III | 32.08 | 1046 | 1609 | 2171 | 1609 | | | |
| | 37 | 571 | 3.0 | III | 46.19 | 1161 | 1609 | 2167 | 1609 | | | |
| | 31 | 684 | 3.0 | III | 55.39 | 1224 | 1609 | 2162 | 1609 | | | |
| | 26 | 818 | 2.9 | III | 66.23 | 1289 | 1609 | 2158 | 1609 | | | |
| | 21 | 1003 | 2.6 | III | 81.17 | 1364 | 1609 | 2149 | 1609 | | | |
| | 18 | 1143 | 1.8 | II | 92.48 | 1411 | 1609 | 2142 | 1609 | | | |
| | 16 | 1353 | 1.4 | II | 109.5 | 1472 | 1609 | 2129 | 1609 | | | |
| | 19 | 1099 | 3.0 | III | 88.94 | 1595 | 1609 | 1800 | 2363 | SK 1382NB - 71S/4 | 56 | 324 |
| | 17 | 1250 | 2.6 | III | 101.14 | 1584 | 1609 | 1800 | 2363 | | | |
| | 16 | 1311 | 2.5 | III | 106.08 | 1580 | 1609 | 1800 | 2363 | | | |
| | 14 | 1460 | 2.2 | III | 118.16 | 1564 | 1609 | 1800 | 2363 | | | |
| | 13 | 1688 | 1.9 | II | 136.60 | 1539 | 1609 | 1800 | 2363 | | | |
| | 11 | 1954 | 1.7 | II | 158.12 | 1505 | 1609 | 1800 | 2363 | | | |
| | 8.4 | 2516 | 1.3 | I | 203.6 | 1411 | 1609 | 1800 | 2363 | | | |
| | 6.6 | 3180 | 1.0 | I | 257.32 | 1256 | 1609 | 1800 | 2363 | | | |
| | 5.7 | 3729 | 0.9 | * | 301.82 | 1078 | 1609 | 1800 | 2363 | | | |
| | 25 | 861 | 4.6 | III | 69.67 | 2259 | 2700 | 3155 | 3375 | SK 2282 - 71S/4 | 67 | 332 |
| | 21 | 1018 | 4.1 | III | 82.42 | 2255 | 2700 | 3152 | 3375 | | | |
| | 17 | 1248 | 3.1 | III | 100.98 | 2246 | 2700 | 3146 | 3375 | | | |
| | 16 | 1286 | 2.7 | III | 104.07 | 2243 | 2700 | 3143 | 3375 | | | |
| | 13 | 1576 | 2.1 | III | 127.51 | 2228 | 2700 | 3132 | 3375 | | | |
| | 13 | 1629 | 2.8 | III | 131.86 | 2225 | 2700 | 3130 | 3375 | SK 2382 - 71S/4 | 82 | 334 |
| | 11 | 1853 | 2.5 | III | 149.96 | 2210 | 2700 | 3119 | 3375 | | | |
| | 9.2 | 2287 | 2.0 | III | 185.11 | 2176 | 2700 | 3096 | 3375 | | | |
| | 7.2 | 2917 | 1.4 | II | 236.11 | 2111 | 2700 | 3051 | 3375 | | | |
| | 6.2 | 3414 | 1.4 | II | 276.27 | 2048 | 2700 | 3006 | 3375 | | | |
| | 5.2 | 4083 | 1.2 | I | 330.45 | 1942 | 2700 | 2936 | 3375 | | | |
| | 4.4 | 4830 | 1.0 | I | 390.93 | 1793 | 2700 | 2840 | 3375 | | | |
| | 3.5 | 5963 | 0.8 | * | 482.56 | 1481 | 2700 | 2653 | 3375 | | | |
| | 11 | 1995 | 3.5 | III | 161.46 | 3643 | 3263 | 5130 | 4500 | SK 3382 - 71S/4 | 118 | 338 |
| | 9 | 2356 | 3.3 | III | 190.69 | 3661 | 3263 | 5121 | 4500 | | | |
| | 7.4 | 2852 | 3.1 | III | 230.83 | 3643 | 3263 | 5110 | 4500 | | | |
| | 6 | 3548 | 2.3 | III | 287.14 | 3611 | 3263 | 5087 | 4500 | | | |
| | 4.2 | 5049 | 1.4 | II | 408.58 | 3521 | 3263 | 5022 | 4500 | | | |
| | 3.5 | 5963 | 1.3 | I | 482.56 | 3447 | 3263 | 4973 | 4500 | | | |
| | 2.9 | 7218 | 1.2 | I | 584.13 | 3323 | 3263 | 4887 | 4500 | | | |
| | 2.4 | 8978 | 0.9 | * | 726.61 | 3098 | 3263 | 4736 | 4500 | | | |
| | 2.1 | 9989 | 0.9 | * | 808.42 | 2939 | 3263 | 4633 | 4500 | | | |
| | 5.2 | 4038 | 4.1 | III | 326.81 | 4930 | 4950 | 6885 | 6750 | SK 4382 - 71S/4 | 166 | 342 |
| | 4.4 | 4828 | 3.7 | III | 390.76 | 4907 | 4950 | 6869 | 6750 | | | |
| | 3.8 | 5501 | 2.7 | III | 445.23 | 4885 | 4950 | 6851 | 6750 | | | |
| | 3.2 | 6579 | 2.7 | III | 532.44 | 4840 | 4950 | 6822 | 6750 | | | |
| | 2.6 | 8084 | 1.3 | I | 654.27 | 4766 | 4950 | 6768 | 6750 | | | |
| | 2.2 | 9667 | 1.4 | II | 782.32 | 4669 | 4950 | 6701 | 6750 | | | |
| | 1.5 | 13962 | 1.0 | I | 1129.91 | 4302 | 4950 | 6451 | 6750 | | | |

(AGMA Class I = $f_B$ 1.0 - 1.39 II = $f_B$ 1.4 - 1.99 III = $f_B$ ≥ 2.0 * = $f_B$ < 1.0)


Send Quote Requests to info@automatedpt.com
Call +1(800)985-6929 To Order or Order Online At Nordgearmotors.com

DRIVESYSTEMS



# 0.33 hp, 0.5 hp Gearmotors



| Motor Power $P_n$ [hp] | Output Speed $n_2$ [rpm] | Output Torque $T_2$ [lb-in] | Service Factor $f_B$ | AGMA Class | Gear Ratio $i_{tot}$ | Standard Bearings $F_{RN}$ OHL [lb] | Standard Bearings $F_{AN}$ Thrust [lb] | Heavy Duty Bearings (VL) $F_{RVL}$ OHL [lb] | Heavy Duty Bearings (VL) $F_{AVL}$ Thrust [lb] | Model Type | Weight [lb] | Dim. Page |
|---|---|---|---|---|---|---|---|---|---|---|---|---|
| **0.33** | 2 | 9064 | 1.8 | II | 873.31 | 4709 | 4950 | 6728 | 6750 | **SK 4282/12 - 71S/4** | 155 | 374 |
| | 1.5 | 11530 | 1.4 | II | 1110.82 | 4529 | 4950 | 6604 | 6750 | | | |
| | 1.3 | 13945 | 1.1 | I | 1343.53 | 4304 | 4950 | 6451 | 6750 | | | |
| | 3.1 | 5718 | 4.6 | III | 550.94 | 7128 | 7200 | 10022 | 9000 | **SK 5282/12 - 71S/4** | 235 | 374 |
| | 2.5 | 7156 | 3.7 | III | 689.45 | 7097 | 7200 | 9999 | 9000 | | | |
| | 2 | 8952 | 3.0 | III | 862.46 | 7047 | 7200 | 9963 | 9000 | | | |
| | 1.6 | 11373 | 2.3 | III | 1095.71 | 6962 | 7200 | 9902 | 9000 | | | |
| | 0.95 | 18742 | 1.4 | II | 1805.75 | 6563 | 7200 | 9628 | 9000 | | | |
| **0.5** | 406 | 78 | 6.1 | III | 4.24 | 504 | 799 | 1125 | 1890 | **SK 0182NB - 71L/4** | 23 | 312 |
| | 322 | 97 | 6.2 | III | 5.34 | 540 | 882 | 1125 | 1890 | | | |
| | 271 | 115 | 6.2 | III | 6.35 | 572 | 945 | 1125 | 1890 | | | |
| | 237 | 132 | 5.5 | III | 7.26 | 594 | 995 | 1125 | 1890 | | | |
| | 199 | 157 | 5.5 | III | 8.64 | 626 | 1069 | 1125 | 1890 | | | |
| | 181 | 173 | 5.5 | III | 9.49 | 644 | 1112 | 1125 | 1890 | | | |
| | 148 | 212 | 4.6 | III | 11.66 | 684 | 1148 | 1125 | 1890 | | | |
| | 124 | 252 | 3.9 | III | 13.84 | 720 | 1148 | 1125 | 1890 | | | |
| | 104 | 301 | 2.9 | III | 16.53 | 756 | 1148 | 1125 | 1890 | | | |
| | 115 | 271 | 2.4 | III | 14.92 | 727 | 1148 | 1125 | 1890 | | | |
| | 92 | 342 | 2.5 | III | 18.79 | 779 | 1148 | 1125 | 1890 | | | |
| | 77 | 406 | 2.4 | III | 22.35 | 817 | 1148 | 1125 | 1890 | | | |
| | 70 | 446 | 2.3 | III | 24.55 | 837 | 1148 | 1125 | 1890 | | | |
| | 59 | 530 | 1.8 | II | 29.13 | 878 | 1148 | 1125 | 1890 | | | |
| | 54 | 578 | 1.5 | II | 31.81 | 893 | 1148 | 1125 | 1890 | | | |
| | 49 | 633 | 1.4 | II | 34.80 | 916 | 1148 | 1125 | 1890 | | | |
| | 46 | 686 | 1.3 | I | 37.73 | 932 | 1148 | 1125 | 1890 | | | |
| | 41 | 761 | 1.0 | I | 41.85 | 950 | 1148 | 1125 | 1890 | | | |
| | 35 | 903 | 1.0 | I | 49.65 | 988 | 1148 | 1125 | 1890 | | | |
| | 29 | 1079 | 0.9 | * | 59.33 | 1022 | 1148 | 1125 | 1890 | | | |
| | 76 | 413 | 2.8 | III | 22.70 | 812 | 1125 | 1658 | 1125 | **SK 0282NB - 71L/4** | 32 | 318 |
| | 66 | 472 | 2.4 | III | 25.96 | 844 | 1125 | 1656 | 1125 | | | |
| | 57 | 546 | 2.1 | III | 30.03 | 880 | 1125 | 1652 | 1125 | | | |
| | 50 | 621 | 2.2 | III | 34.16 | 902 | 1125 | 1647 | 1125 | | | |
| | 43 | 734 | 2.0 | III | 40.38 | 945 | 1125 | 1640 | 1125 | | | |
| | 39 | 804 | 1.8 | II | 44.22 | 968 | 1125 | 1636 | 1125 | | | |
| | 33 | 939 | 1.4 | II | 51.64 | 1004 | 1125 | 1622 | 1125 | | | |
| | 30 | 1028 | 1.4 | II | 56.55 | 1026 | 1125 | 1613 | 1125 | | | |
| | 26 | 1200 | 1.0 | I | 65.99 | 1064 | 1125 | 1595 | 1125 | | | |
| | 22 | 1444 | 0.8 | * | 79.40 | 1055 | 1125 | 1562 | 1125 | | | |
| | 20 | 1558 | 0.8 | * | 85.72 | 1028 | 1125 | 1544 | 1125 | | | |
| | 359 | 87 | 8.6 | III | 4.79 | 569 | 1033 | 1598 | 1609 | **SK 1282 - 71L/4** | 45 | 330 |
| | 314 | 99 | 8.3 | III | 5.47 | 594 | 1094 | 1663 | 1609 | | | |
| | 267 | 117 | 8.0 | III | 6.43 | 623 | 1166 | 1744 | 1609 | | | |
| | 238 | 132 | 7.7 | III | 7.24 | 648 | 1226 | 1805 | 1609 | | | |
| | 210 | 149 | 8.6 | III | 8.21 | 677 | 1298 | 1874 | 1609 | | | |
| | 209 | 150 | 7.4 | III | 8.24 | 675 | 1292 | 1874 | 1609 | | | |
| | 187 | 167 | 8.0 | III | 9.18 | 700 | 1355 | 1937 | 1609 | | | |
| | 166 | 188 | 7.7 | III | 10.34 | 727 | 1422 | 2005 | 1609 | | | |
| | 146 | 214 | 7.4 | III | 11.76 | 756 | 1501 | 2081 | 1609 | | | |
| | 122 | 257 | 7.2 | III | 14.11 | 799 | 1609 | 2174 | 1609 | | | |
| | 100 | 313 | 6.3 | III | 17.21 | 848 | 1609 | 2171 | 1609 | | | |
| | 84 | 374 | 5.3 | III | 20.57 | 898 | 1609 | 2171 | 1609 | | | |
| | 68 | 459 | 4.3 | III | 25.22 | 952 | 1609 | 2169 | 1609 | | | |

(AGMA Class I = $f_B$ 1.0 - 1.39 II = $f_B$ 1.4 - 1.99 III = $f_B$ ≥ 2.0 * = $f_B$ < 1.0)


Send Quote Requests to info@automatedpt.com
Call +1(800)985-6929 To Order or Order Online At Nordgearmotors.com

# 0.5 hp Gearmotors



DRIVESYSTEMS



| Motor Power $P_n$ [hp] | Output Speed $n_2$ [rpm] | Output Torque $T_2$ [lb-in] | Service Factor $f_B$ | AGMA Class | Gear Ratio $i_{tot}$ | Standard Bearings $F_{RN}$ OHL [lb] | Standard Bearings $F_{AN}$ Thrust [lb] | Heavy Duty Bearings (VL) $F_{RVL}$ OHL [lb] | Heavy Duty Bearings (VL) $F_{AVL}$ Thrust [lb] | Model Type | Weight [lb] | Dim. Page |
|---|---|---|---|---|---|---|---|---|---|---|---|---|
| 0.5 | 61 | 515 | 3.9 | III | 28.33 | 986 | 1609 | 2167 | 1609 | SK 1282 - 71L/4 | 45 | 330 |
| | 54 | 583 | 3.5 | III | 32.08 | 1019 | 1609 | 2165 | 1609 | | | |
| | 42 | 747 | 2.6 | III | 41.07 | 1085 | 1609 | 2160 | 1609 | | | |
| | 37 | 840 | 2.1 | III | 46.19 | 1118 | 1609 | 2156 | 1609 | | | |
| | 35 | 895 | 2.6 | III | 49.25 | 1143 | 1609 | 2153 | 1609 | | | |
| | 31 | 1007 | 2.1 | III | 55.39 | 1175 | 1609 | 2149 | 1609 | | | |
| | 29 | 1071 | 2.3 | III | 58.89 | 1197 | 1609 | 2144 | 1609 | | | |
| | 26 | 1204 | 2.0 | III | 66.23 | 1231 | 1609 | 2138 | 1609 | | | |
| | 24 | 1312 | 2.0 | III | 72.17 | 1258 | 1609 | 2131 | 1609 | | | |
| | 21 | 1476 | 1.8 | II | 81.17 | 1298 | 1609 | 2120 | 1609 | | | |
| | 19 | 1681 | 1.2 | I | 92.48 | 1332 | 1609 | 2102 | 1609 | | | |
| | 25 | 1240 | 2.6 | III | 68.23 | 1539 | 1609 | 1800 | 2363 | SK 1382NB - 71L/4 | 58 | 324 |
| | 22 | 1436 | 2.3 | III | 78.99 | 1566 | 1609 | 1800 | 2363 | | | |
| | 19 | 1617 | 2.0 | III | 88.94 | 1548 | 1609 | 1800 | 2363 | | | |
| | 17 | 1839 | 1.8 | II | 101.14 | 1521 | 1609 | 1800 | 2363 | | | |
| | 16 | 1929 | 1.7 | II | 106.08 | 1508 | 1609 | 1800 | 2363 | | | |
| | 15 | 2148 | 1.5 | II | 118.16 | 1476 | 1609 | 1800 | 2363 | | | |
| | 13 | 2484 | 1.3 | I | 136.60 | 1418 | 1609 | 1800 | 2363 | | | |
| | 11 | 2875 | 1.1 | I | 158.12 | 1334 | 1609 | 1800 | 2363 | | | |
| | 8.4 | 3702 | 0.9 | * | 203.6 | 1089 | 1609 | 1800 | 2363 | | | |
| | 25 | 1267 | 3.1 | III | 69.67 | 2243 | 2700 | 3143 | 3375 | SK 2282 - 71L/4 | 69 | 332 |
| | 21 | 1498 | 2.8 | III | 82.42 | 2232 | 2700 | 3134 | 3375 | | | |
| | 17 | 1836 | 2.1 | III | 100.98 | 2212 | 2700 | 3121 | 3375 | | | |
| | 17 | 1892 | 1.9 | II | 104.07 | 2207 | 2700 | 3119 | 3375 | | | |
| | 13 | 2318 | 1.5 | II | 127.51 | 2174 | 2700 | 3094 | 3375 | | | |
| | 13 | 2397 | 1.9 | II | 131.86 | 2165 | 2700 | 3089 | 3375 | SK 2382 - 71L/4 | 84 | 334 |
| | 11 | 2726 | 1.7 | II | 149.96 | 2133 | 2700 | 3065 | 3375 | | | |
| | 9.3 | 3366 | 1.4 | II | 185.11 | 2054 | 2700 | 3011 | 3375 | | | |
| | 7.3 | 4293 | 1.0 | I | 236.11 | 1906 | 2700 | 2912 | 3375 | | | |
| | 6.2 | 5023 | 1.0 | I | 276.27 | 1748 | 2700 | 2813 | 3375 | | | |
| | 5.2 | 6008 | 0.8 | * | 330.45 | 1467 | 2700 | 2646 | 3375 | | | |
| | 17 | 1834 | 3.9 | III | 100.88 | 3101 | 3263 | 5132 | 4500 | SK 3282 - 71L/4 | 102 | 336 |
| | 15 | 2040 | 3.3 | III | 112.23 | 3202 | 3263 | 5130 | 4500 | | | |
| | 14 | 2308 | 3.0 | III | 126.93 | 3310 | 3263 | 5123 | 4500 | SK 3382 - 71L/4 | 120 | 338 |
| | 11 | 2936 | 2.4 | III | 161.46 | 3535 | 3263 | 5108 | 4500 | | | |
| | 9 | 3467 | 2.2 | III | 190.69 | 3616 | 3263 | 5090 | 4500 | | | |
| | 7.5 | 4197 | 2.1 | III | 230.83 | 3575 | 3263 | 5063 | 4500 | | | |
| | 6 | 5221 | 1.6 | II | 287.14 | 3508 | 3263 | 5013 | 4500 | | | |
| | 4.2 | 7428 | 0.9 | * | 408.58 | 3301 | 3263 | 4871 | 4500 | | | |
| | 3.6 | 8773 | 0.9 | * | 482.56 | 3128 | 3263 | 4757 | 4500 | | | |
| | 2.9 | 10620 | 0.8 | * | 584.13 | 2824 | 3263 | 4561 | 4500 | | | |
| | 6.3 | 4955 | 2.8 | III | 272.54 | 4903 | 4950 | 6865 | 6750 | SK 4382 - 71L/4 | 168 | 342 |
| | 5.3 | 5942 | 2.8 | III | 326.81 | 4867 | 4950 | 6840 | 6750 | | | |
| | 4.4 | 7104 | 2.5 | III | 390.76 | 4817 | 4950 | 6804 | 6750 | | | |
| | 3.9 | 8095 | 1.8 | II | 445.23 | 4766 | 4950 | 6768 | 6750 | | | |
| | 3.2 | 9680 | 1.8 | II | 532.44 | 4669 | 4950 | 6701 | 6750 | | | |
| | 2.6 | 11895 | 0.9 | * | 654.27 | 4500 | 4950 | 6584 | 6750 | | | |
| | 2.2 | 14223 | 0.9 | * | 782.32 | 4275 | 4950 | 6433 | 6750 | | | |
| | 2 | 14161 | 1.1 | I | 873.31 | 4282 | 4950 | 6437 | 6750 | SK 4282/12 - 71L/4 | 157 | 374 |
| | 1.5 | 18013 | 0.9 | * | 1110.82 | 3782 | 4950 | 6116 | 6750 | | | |

(AGMA Class I = $f_B$ 1.0 - 1.39 II = $f_B$ 1.4 - 1.99 III = $f_B$ ≥ 2.0 * = $f_B$ < 1.0)


Send Quote Requests to info@automatedpt.com
Call +1(800)985-6929 To Order or Order Online At Nordgearmotors.com

NORD DRIVESYSTEMS



# 0.5 hp, 0.75 hp Gearmotors



| Motor Power $P_n$ [hp] | Output Speed $n_2$ [rpm] | Output Torque $T_2$ [lb-in] | Service Factor $f_B$ | AGMA Class | Gear Ratio $i_{tot}$ | Standard Bearings $F_{RN}$ OHL [lb] | Standard Bearings $F_{AN}$ Thrust [lb] | Heavy Duty Bearings (VL) $F_{RVL}$ OHL [lb] | Heavy Duty Bearings (VL) $F_{AVL}$ Thrust [lb] | Model Type | Weight [lb] | Dim. Page |
|---|---|---|---|---|---|---|---|---|---|---|---|---|
| **0.5** | 3.8 | 7267 | 3.7 | III | 448.15 | 7094 | 7200 | 9997 | 9000 | **SK 5282/12 - 71L/4** | 237 | 374 |
| | 3.1 | 8934 | 3.0 | III | 550.94 | 7047 | 7200 | 9963 | 9000 | | | |
| | 2.5 | 11180 | 2.4 | III | 689.45 | 6971 | 7200 | 9909 | 9000 | | | |
| | 2 | 13985 | 1.9 | II | 862.46 | 6845 | 7200 | 9821 | 9000 | | | |
| | 1.6 | 17768 | 1.5 | II | 1095.71 | 6629 | 7200 | 9673 | 9000 | | | |
| | 1.3 | 21642 | 1.2 | I | 1334.62 | 6343 | 7200 | 9479 | 9000 | | | |
| | 0.95 | 29281 | 0.9 | * | 1805.75 | 5549 | 7200 | 8966 | 9000 | | | |
| **0.75** | 403 | 117 | 4.1 | III | 4.24 | 493 | 788 | 1125 | 1890 | **SK 0182NB - 80S/4** | 26 | 312 |
| | 320 | 148 | 4.1 | III | 5.34 | 529 | 864 | 1125 | 1890 | | | |
| | 269 | 176 | 4.1 | III | 6.35 | 558 | 927 | 1125 | 1890 | | | |
| | 236 | 201 | 3.6 | III | 7.26 | 578 | 974 | 1125 | 1890 | | | |
| | 198 | 239 | 3.6 | III | 8.64 | 610 | 1042 | 1125 | 1890 | | | |
| | 180 | 263 | 3.6 | III | 9.49 | 626 | 1080 | 1125 | 1890 | | | |
| | 147 | 323 | 3.0 | III | 11.66 | 662 | 1148 | 1125 | 1890 | | | |
| | 124 | 383 | 2.5 | III | 13.84 | 693 | 1148 | 1125 | 1890 | | | |
| | 103 | 458 | 1.9 | II | 16.53 | 727 | 1148 | 1125 | 1890 | | | |
| | 115 | 413 | 1.6 | II | 14.92 | 693 | 1148 | 1125 | 1890 | | | |
| | 91 | 520 | 1.6 | II | 18.79 | 738 | 1148 | 1125 | 1890 | | | |
| | 77 | 619 | 1.6 | II | 22.35 | 772 | 1148 | 1125 | 1890 | | | |
| | 70 | 680 | 1.5 | II | 24.55 | 785 | 1148 | 1125 | 1890 | | | |
| | 59 | 806 | 1.2 | I | 29.13 | 817 | 1148 | 1125 | 1890 | | | |
| | 54 | 880 | 1.0 | I | 31.81 | 828 | 1148 | 1125 | 1890 | | | |
| | 49 | 963 | 0.9 | * | 34.80 | 846 | 1148 | 1125 | 1890 | | | |
| | 45 | 1044 | 0.8 | * | 37.73 | 855 | 1148 | 1125 | 1890 | | | |
| | 103 | 459 | 2.7 | III | 16.58 | 720 | 1125 | 1656 | 1125 | **SK 0282NB - 80S/4** | 35 | 318 |
| | 97 | 487 | 2.3 | III | 17.61 | 731 | 1125 | 1656 | 1125 | | | |
| | 86 | 552 | 2.1 | III | 19.95 | 756 | 1125 | 1652 | 1125 | | | |
| | 79 | 597 | 2.1 | III | 21.57 | 772 | 1125 | 1649 | 1125 | | | |
| | 75 | 628 | 1.8 | II | 22.70 | 783 | 1125 | 1647 | 1125 | | | |
| | 66 | 719 | 1.6 | II | 25.96 | 808 | 1125 | 1640 | 1125 | | | |
| | 57 | 831 | 1.4 | II | 30.03 | 839 | 1125 | 1634 | 1125 | | | |
| | 50 | 945 | 1.4 | II | 34.16 | 853 | 1125 | 1622 | 1125 | | | |
| | 42 | 1118 | 1.3 | I | 40.38 | 887 | 1125 | 1604 | 1125 | | | |
| | 39 | 1224 | 1.2 | I | 44.22 | 902 | 1125 | 1591 | 1125 | | | |
| | 33 | 1429 | 0.9 | * | 51.64 | 925 | 1125 | 1564 | 1125 | | | |
| | 30 | 1565 | 0.9 | * | 56.55 | 941 | 1125 | 1541 | 1125 | | | |
| | 357 | 133 | 5.6 | III | 4.79 | 563 | 1022 | 1595 | 1609 | **SK 1282 - 80S/4** | 49 | 330 |
| | 313 | 151 | 5.5 | III | 5.47 | 587 | 1082 | 1658 | 1609 | | | |
| | 266 | 178 | 5.3 | III | 6.43 | 617 | 1154 | 1739 | 1609 | | | |
| | 236 | 200 | 5.1 | III | 7.24 | 639 | 1211 | 1798 | 1609 | | | |
| | 208 | 227 | 5.6 | III | 8.21 | 666 | 1278 | 1870 | 1609 | | | |
| | 208 | 228 | 4.9 | III | 8.24 | 664 | 1274 | 1870 | 1609 | | | |
| | 186 | 254 | 5.3 | III | 9.18 | 689 | 1339 | 1928 | 1609 | | | |
| | 165 | 286 | 5.1 | III | 10.34 | 713 | 1400 | 1998 | 1609 | | | |
| | 145 | 325 | 4.9 | III | 11.76 | 740 | 1474 | 2072 | 1609 | | | |
| | 121 | 391 | 4.8 | III | 14.11 | 783 | 1593 | 2171 | 1609 | | | |
| | 99 | 476 | 4.2 | III | 17.21 | 828 | 1609 | 2169 | 1609 | | | |
| | 83 | 569 | 3.5 | III | 20.57 | 871 | 1609 | 2167 | 1609 | | | |
| | 68 | 698 | 2.9 | III | 25.22 | 920 | 1609 | 2162 | 1609 | | | |
| | 60 | 784 | 2.5 | III | 28.33 | 950 | 1609 | 2158 | 1609 | | | |
| | 53 | 888 | 2.3 | III | 32.08 | 979 | 1609 | 2153 | 1609 | | | |
| | 42 | 1137 | 1.7 | II | 41.07 | 1028 | 1609 | 2142 | 1609 | | | |
| | 35 | 1363 | 1.7 | II | 49.25 | 1078 | 1609 | 2126 | 1609 | | | |
| | 29 | 1630 | 1.5 | II | 58.89 | 1118 | 1609 | 2106 | 1609 | | | |
| | 24 | 1998 | 1.3 | I | 72.17 | 1166 | 1609 | 2072 | 1609 | | | |

(AGMA Class I = $f_B$ 1.0 - 1.39 II = $f_B$ 1.4 - 1.99 III = $f_B$ ≥ 2.0 * = $f_B$ < 1.0)


Send Quote Requests to info@automatedpt.com
Call +1(800)985-6929 To Order or Order Online At Nordgearmotors.com

# 0.75 hp Gearmotors



DRIVESYSTEMS



| Motor Power $P_n$ [hp] | Output Speed $n_2$ [rpm] | Output Torque $T_2$ [lb-in] | Service Factor $f_B$ | AGMA Class | Gear Ratio $i_{tot}$ | Standard Bearings $F_{RN}$ OHL [lb] | Standard Bearings $F_{AN}$ Thrust [lb] | Heavy Duty Bearings (VL) $F_{RVL}$ OHL [lb] | Heavy Duty Bearings (VL) $F_{AVL}$ Thrust [lb] | Model Type | Weight [lb] | Dim. Page |
|---|---|---|---|---|---|---|---|---|---|---|---|---|
| 0.75 | 66 | 720 | 3.3 | III | 26.01 | 1148 | 1609 | 1800 | 2363 | SK 1382NB - 80S/4 | 62 | 324 |
| | 57 | 825 | 3.0 | III | 29.79 | 1190 | 1609 | 1800 | 2363 | | | |
| | 48 | 989 | 2.7 | III | 35.75 | 1244 | 1609 | 1800 | 2363 | | | |
| | 44 | 1073 | 2.7 | III | 38.77 | 1274 | 1609 | 1800 | 2363 | | | |
| | 39 | 1229 | 2.4 | III | 44.40 | 1314 | 1609 | 1800 | 2363 | | | |
| | 32 | 1475 | 2.1 | III | 53.28 | 1373 | 1609 | 1800 | 2363 | | | |
| | 29 | 1661 | 2.0 | III | 60.00 | 1409 | 1609 | 1800 | 2363 | | | |
| | 25 | 1888 | 1.7 | II | 68.23 | 1447 | 1609 | 1800 | 2363 | | | |
| | 22 | 2186 | 1.5 | II | 78.99 | 1469 | 1609 | 1800 | 2363 | | | |
| | 19 | 2462 | 1.3 | I | 88.94 | 1422 | 1609 | 1800 | 2363 | | | |
| | 17 | 2799 | 1.2 | I | 101.14 | 1350 | 1609 | 1800 | 2363 | | | |
| | 16 | 2936 | 1.1 | I | 106.08 | 1319 | 1609 | 1800 | 2363 | | | |
| | 14 | 3270 | 1.0 | I | 118.16 | 1231 | 1609 | 1800 | 2363 | | | |
| | 13 | 3781 | 0.9 | * | 136.60 | 1060 | 1609 | 1800 | 2363 | | | |
| | 46 | 1029 | 4.0 | III | 37.18 | 2027 | 2700 | 3150 | 3375 | SK 2282 - 80S/4 | 73 | 332 |
| | 38 | 1249 | 3.2 | III | 45.11 | 2142 | 2700 | 3146 | 3375 | | | |
| | 32 | 1494 | 3.0 | III | 53.96 | 2232 | 2700 | 3137 | 3375 | | | |
| | 27 | 1767 | 2.6 | III | 63.83 | 2216 | 2700 | 3123 | 3375 | | | |
| | 25 | 1928 | 2.0 | III | 69.67 | 2205 | 2700 | 3116 | 3375 | | | |
| | 21 | 2281 | 1.9 | II | 82.42 | 2176 | 2700 | 3096 | 3375 | | | |
| | 17 | 2795 | 1.4 | II | 100.98 | 2126 | 2700 | 3060 | 3375 | | | |
| | 16 | 2880 | 1.2 | I | 104.07 | 2115 | 2700 | 3053 | 3375 | | | |
| | 13 | 3529 | 1.0 | I | 127.51 | 2032 | 2700 | 2997 | 3375 | | | |
| | 13 | 3650 | 1.3 | I | 131.86 | 2014 | 2700 | 2984 | 3375 | SK 2382 - 80S/4 | 88 | 334 |
| | 11 | 4151 | 1.1 | I | 149.96 | 1931 | 2700 | 2930 | 3375 | | | |
| | 9.2 | 5124 | 0.9 | * | 185.11 | 1724 | 2700 | 2797 | 3375 | | | |
| | 21 | 2208 | 3.4 | III | 79.76 | 2822 | 3263 | 5126 | 4500 | SK 3282 - 80S/4 | 106 | 336 |
| | 19 | 2456 | 3.4 | III | 88.74 | 2912 | 3263 | 5119 | 4500 | | | |
| | 17 | 2792 | 2.6 | III | 100.88 | 3013 | 3263 | 5112 | 4500 | | | |
| | 15 | 3106 | 2.2 | III | 112.23 | 3103 | 3263 | 5101 | 4500 | | | |
| | 13 | 3513 | 1.9 | II | 126.93 | 3184 | 3263 | 5090 | 4500 | SK 3382 - 80S/4 | 123 | 338 |
| | 11 | 4469 | 1.6 | II | 161.46 | 3375 | 3263 | 5051 | 4500 | | | |
| | 9 | 5278 | 1.5 | II | 190.69 | 3503 | 3263 | 5011 | 4500 | | | |
| | 7.4 | 6389 | 1.4 | II | 230.83 | 3409 | 3263 | 4946 | 4500 | | | |
| | 6 | 7948 | 1.0 | I | 287.14 | 3238 | 3263 | 4829 | 4500 | | | |
| | 14 | 3277 | 4.7 | III | 118.38 | 4671 | 4950 | 6899 | 6750 | SK 4382 - 80S/4 | 172 | 342 |
| | 12 | 3892 | 4.4 | III | 140.60 | 4910 | 4950 | 6887 | 6750 | | | |
| | 11 | 4434 | 3.3 | III | 160.20 | 4919 | 4950 | 6878 | 6750 | | | |
| | 8.9 | 5302 | 3.3 | III | 191.57 | 4892 | 4950 | 6858 | 6750 | | | |
| | 8.1 | 5843 | 2.5 | III | 211.09 | 4871 | 4950 | 6842 | 6750 | | | |
| | 6.8 | 7006 | 2.5 | III | 253.12 | 4822 | 4950 | 6809 | 6750 | | | |
| | 6.3 | 7543 | 1.8 | II | 272.54 | 4795 | 4950 | 6788 | 6750 | | | |
| | 5.7 | 8377 | 2.2 | III | 302.65 | 4750 | 4950 | 6757 | 6750 | | | |
| | 5.2 | 9046 | 1.8 | II | 326.81 | 4709 | 4950 | 6730 | 6750 | | | |
| | 5 | 9545 | 1.5 | II | 344.84 | 4678 | 4950 | 6707 | 6750 | | | |
| | 4.4 | 10816 | 1.6 | II | 390.76 | 4588 | 4950 | 6644 | 6750 | | | |
| | 4.1 | 11414 | 1.5 | II | 412.38 | 4541 | 4950 | 6611 | 6750 | | | |
| | 3.8 | 12323 | 1.2 | I | 445.23 | 4462 | 4950 | 6559 | 6750 | | | |
| | 3.2 | 14737 | 1.2 | I | 532.44 | 4219 | 4950 | 6395 | 6750 | | | |
| | 2.8 | 16770 | 0.8 | * | 605.88 | 3965 | 4950 | 6230 | 6750 | | | |

(AGMA Class I = $f_B$ 1.0 - 1.39 II = $f_B$ 1.4 - 1.99 III = $f_B$ ≥ 2.0 * = $f_B$ < 1.0)


Send Quote Requests to info@automatedpt.com
Call +1(800)985-6929 To Order or Order Online At Nordgearmotors.com

DRIVESYSTEMS



# 0.75 hp, 1.0 hp Gearmotors



| Motor Power $P_n$ [hp] | Output Speed $n_2$ [rpm] | Output Torque $T_2$ [lb-in] | Service Factor $f_B$ | AGMA Class | Gear Ratio $i_{tot}$ | Standard Bearings $F_{RN}$ OHL [lb] | Standard Bearings $F_{AN}$ Thrust [lb] | Heavy Duty Bearings (VL) $F_{RVL}$ OHL [lb] | Heavy Duty Bearings (VL) $F_{AVL}$ Thrust [lb] | Model Type | Weight [lb] | Dim. Page |
|---|---|---|---|---|---|---|---|---|---|---|---|---|
| **0.75** | 6.3 | 7473 | 3.2 | III | 269.99 | 7090 | 7200 | 9992 | 9000 | **SK 5382 - 80S/4** | 260 | 346 |
| | 5.2 | 9175 | 3.1 | III | 331.48 | 7040 | 7200 | 9959 | 9000 | | | |
| | 4.7 | 10011 | 2.5 | III | 361.69 | 7013 | 7200 | 9938 | 9000 | | | |
| | 4 | 11840 | 2.4 | III | 427.79 | 6944 | 7200 | 9889 | 9000 | | | |
| | 3.3 | 14537 | 1.9 | II | 525.20 | 6818 | 7200 | 9801 | 9000 | | | |
| | 3 | 15782 | 1.6 | II | 570.18 | 6750 | 7200 | 9756 | 9000 | | | |
| | 2.4 | 19376 | 1.5 | II | 700.03 | 6518 | 7200 | 9596 | 9000 | | | |
| | 1.8 | 25919 | 0.9 | * | 936.45 | 5942 | 7200 | 9214 | 9000 | | | |
| | 2 | 22166 | 1.2 | I | 862.46 | 6300 | 7200 | 9448 | 9000 | **SK 5282/12 - 80S/4** | 240 | 374 |
| | 1.6 | 28161 | 0.9 | * | 1095.71 | 5688 | 7200 | 9052 | 9000 | | | |
| | 1.3 | 34301 | 0.8 | * | 1334.62 | 4802 | 7200 | 8523 | 9000 | | | |
| | 3.9 | 11187 | 4.3 | III | 435.29 | 9365 | 10463 | 13163 | 13500 | **SK 6382/22 - 80S/4** | 439 | 374 |
| | 3 | 14627 | 3.3 | III | 569.11 | 9270 | 10463 | 13095 | 13500 | | | |
| | 2.7 | 16385 | 2.9 | III | 637.53 | 9212 | 10463 | 13055 | 13500 | | | |
| | 2.1 | 21042 | 2.3 | III | 818.71 | 9018 | 10463 | 12920 | 13500 | | | |
| | 1.5 | 28384 | 1.7 | II | 1104.39 | 8606 | 10463 | 12634 | 13500 | | | |
| | 1.4 | 32365 | 1.5 | II | 1259.27 | 8321 | 10463 | 12443 | 13500 | | | |
| | 1.6 | 26888 | 2.3 | III | 1046.18 | 12926 | 13050 | 18306 | 18000 | **SK 7382/22 - 80S/4** | 600 | 374 |
| | 1.3 | 34530 | 1.8 | II | 1343.50 | 12679 | 13050 | 18131 | 18000 | | | |
| | 1.3 | 35129 | 3.0 | III | 1366.83 | 20815 | 16425 | 22500 | 22500 | **SK 8382/32 - 80S/4** | 900 | 374 |
| | 1 | 43637 | 2.5 | III | 1697.85 | 20664 | 16425 | 22500 | 22500 | | | |
| **1.0** | 389 | 162 | 2.9 | III | 4.24 | 488 | 781 | 1125 | 1890 | **SK 0182NB - 80L/4** | 29 | 312 |
| | 309 | 205 | 2.9 | III | 5.34 | 524 | 855 | 1125 | 1890 | **SK 0182NB - 80LH/4** | | |
| | 260 | 244 | 2.9 | III | 6.35 | 549 | 918 | 1125 | 1890 | | | |
| | 227 | 279 | 2.6 | III | 7.26 | 567 | 959 | 1125 | 1890 | | | |
| | 191 | 332 | 2.6 | III | 8.64 | 594 | 1026 | 1125 | 1890 | | | |
| | 174 | 365 | 2.6 | III | 9.49 | 610 | 1060 | 1125 | 1890 | | | |
| | 142 | 448 | 2.2 | III | 11.66 | 644 | 1139 | 1125 | 1890 | | | |
| | 119 | 532 | 1.8 | II | 13.84 | 668 | 1148 | 1125 | 1890 | | | |
| | 100 | 635 | 1.4 | II | 16.53 | 698 | 1148 | 1125 | 1890 | | | |
| | 111 | 573 | 1.2 | I | 14.92 | 664 | 1148 | 1125 | 1890 | | | |
| | 88 | 722 | 1.2 | I | 18.79 | 700 | 1148 | 1125 | 1890 | | | |
| | 74 | 859 | 1.1 | I | 22.35 | 722 | 1148 | 1125 | 1890 | | | |
| | 67 | 943 | 1.1 | I | 24.55 | 736 | 1148 | 1125 | 1890 | | | |
| | 57 | 1119 | 0.9 | * | 29.13 | 756 | 1148 | 1125 | 1890 | | | |
| | 150 | 422 | 2.9 | III | 10.98 | 630 | 1125 | 1658 | 1125 | **SK 0282NB - 80L/4** | 37 | 318 |
| | 147 | 432 | 2.9 | III | 11.25 | 637 | 1125 | 1658 | 1125 | **SK 0282NB - 80LH/4** | | |
| | 127 | 499 | 2.8 | III | 12.98 | 657 | 1125 | 1654 | 1125 | | | |
| | 116 | 546 | 2.6 | III | 14.21 | 675 | 1125 | 1652 | 1125 | | | |
| | 100 | 637 | 1.9 | II | 16.58 | 702 | 1125 | 1647 | 1125 | | | |
| | 94 | 677 | 1.7 | II | 17.61 | 716 | 1125 | 1645 | 1125 | | | |
| | 83 | 766 | 1.5 | II | 19.95 | 734 | 1125 | 1638 | 1125 | | | |
| | 76 | 829 | 1.5 | II | 21.57 | 745 | 1125 | 1634 | 1125 | | | |
| | 73 | 872 | 1.3 | I | 22.70 | 754 | 1125 | 1629 | 1125 | | | |
| | 64 | 997 | 1.1 | I | 25.96 | 774 | 1125 | 1618 | 1125 | | | |
| | 55 | 1154 | 1.0 | I | 30.03 | 797 | 1125 | 1600 | 1125 | | | |
| | 48 | 1312 | 1.0 | I | 34.16 | 801 | 1125 | 1580 | 1125 | | | |
| | 41 | 1551 | 0.9 | * | 40.38 | 824 | 1125 | 1544 | 1125 | | | |
| | 37 | 1699 | 0.9 | * | 44.22 | 837 | 1125 | 1519 | 1125 | | | |

(AGMA Class I = $f_B$ 1.0 - 1.39 II = $f_B$ 1.4 - 1.99 III = $f_B$ ≥ 2.0 * = $f_B$ < 1.0) **(Model Type in blue is an Energy Efficient motor)**


Send Quote Requests to info@automatedpt.com
Call +1(800)985-6929 To Order or Order Online At Nordgearmotors.com

# 1.0 hp Gearmotors



DRIVESYSTEMS

GEARMOTORS

| Motor Power $P_n$ [hp] | Output Speed $n_2$ [rpm] | Output Torque $T_2$ [lb-in] | Service Factor $f_B$ | AGMA Class | Gear Ratio $i_{tot}$ | Standard Bearings $F_{RN}$ OHL [lb] | Standard Bearings $F_{AN}$ Thrust [lb] | Heavy Duty Bearings (VL) $F_{RVL}$ OHL [lb] | Heavy Duty Bearings (VL) $F_{AVL}$ Thrust [lb] | Model Type | Weight [lb] | Dim. Page |
|---|---|---|---|---|---|---|---|---|---|---|---|---|
| 1.0 | 344 | 184 | 4.1 | III | 4.79 | 563 | 1024 | 1604 | 1609 | **SK 1282 - 80L/4** | 51 | 330 |
| | 302 | 210 | 3.9 | III | 5.47 | 585 | 1082 | 1670 | 1609 | SK 1282 - 80LH/4 | | |
| | 257 | 247 | 3.8 | III | 6.43 | 612 | 1154 | 1746 | 1609 | | | |
| | 228 | 278 | 3.7 | III | 7.24 | 637 | 1211 | 1809 | 1609 | | | |
| | 201 | 315 | 4.1 | III | 8.21 | 662 | 1276 | 1879 | 1609 | | | |
| | 200 | 317 | 3.5 | III | 8.24 | 659 | 1274 | 1877 | 1609 | | | |
| | 180 | 353 | 3.8 | III | 9.18 | 682 | 1330 | 1937 | 1609 | | | |
| | 160 | 397 | 3.7 | III | 10.34 | 707 | 1395 | 2003 | 1609 | | | |
| | 140 | 452 | 3.5 | III | 11.76 | 731 | 1467 | 2077 | 1609 | | | |
| | 117 | 542 | 3.4 | III | 14.11 | 772 | 1577 | 2167 | 1609 | | | |
| | 96 | 661 | 3.0 | III | 17.21 | 812 | 1609 | 2162 | 1609 | | | |
| | 80 | 790 | 2.5 | III | 20.57 | 853 | 1609 | 2158 | 1609 | | | |
| | 65 | 969 | 2.1 | III | 25.22 | 896 | 1609 | 2151 | 1609 | | | |
| | 58 | 1088 | 1.8 | II | 28.33 | 918 | 1609 | 2144 | 1609 | | | |
| | 51 | 1232 | 1.7 | II | 32.08 | 943 | 1609 | 2135 | 1609 | | | |
| | 40 | 1578 | 1.2 | I | 41.07 | 974 | 1609 | 2111 | 1609 | | | |
| | 34 | 1892 | 1.2 | I | 49.25 | 1013 | 1609 | 2084 | 1609 | | | |
| | 28 | 2262 | 1.1 | I | 58.89 | 1042 | 1609 | 2041 | 1609 | | | |
| | 23 | 2773 | 0.9 | * | 72.17 | 1067 | 1609 | 1971 | 1609 | | | |
| | 63 | 999 | 2.4 | III | 26.01 | 1118 | 1609 | 1800 | 2363 | **SK 1382NB - 80L/4** | 64 | 324 |
| | 55 | 1144 | 2.2 | III | 29.79 | 1157 | 1609 | 1800 | 2363 | SK 1382NB - 80LH/4 | | |
| | 46 | 1373 | 1.9 | II | 35.75 | 1206 | 1609 | 1800 | 2363 | | | |
| | 43 | 1489 | 1.9 | II | 38.77 | 1226 | 1609 | 1800 | 2363 | | | |
| | 37 | 1706 | 1.7 | II | 44.40 | 1260 | 1609 | 1800 | 2363 | | | |
| | 31 | 2047 | 1.5 | II | 53.28 | 1307 | 1609 | 1800 | 2363 | | | |
| | 28 | 2305 | 1.4 | II | 60.00 | 1330 | 1609 | 1800 | 2363 | | | |
| | 24 | 2621 | 1.2 | I | 68.23 | 1355 | 1609 | 1800 | 2363 | | | |
| | 21 | 3035 | 1.1 | I | 78.99 | 1294 | 1609 | 1800 | 2363 | | | |
| | 19 | 3417 | 1.0 | I | 88.94 | 1186 | 1609 | 1800 | 2363 | | | |
| | 16 | 3886 | 0.8 | * | 101.14 | 1017 | 1609 | 1800 | 2363 | | | |
| | 16 | 4075 | 0.8 | * | 106.08 | 932 | 1609 | 1800 | 2363 | | | |
| | 44 | 1428 | 2.9 | III | 37.18 | 2007 | 2700 | 3139 | 3375 | **SK 2282 - 80L/4** | 75 | 332 |
| | 37 | 1733 | 2.3 | III | 45.11 | 2111 | 2700 | 3125 | 3375 | SK 2282 - 80LH/4 | | |
| | 31 | 2073 | 2.2 | III | 53.96 | 2194 | 2700 | 3107 | 3375 | | | |
| | 26 | 2452 | 1.9 | II | 63.83 | 2160 | 2700 | 3085 | 3375 | | | |
| | 24 | 2677 | 1.5 | II | 69.67 | 2138 | 2700 | 3069 | 3375 | | | |
| | 20 | 3166 | 1.3 | I | 82.42 | 2081 | 2700 | 3031 | 3375 | | | |
| | 16 | 3879 | 1.0 | I | 100.98 | 1978 | 2700 | 2959 | 3375 | | | |
| | 20 | 3159 | 1.6 | II | 82.22 | 2081 | 2700 | 3031 | 3375 | **SK 2382 - 80L/4** | 90 | 334 |
| | 17 | 3778 | 1.3 | I | 98.35 | 1994 | 2700 | 2970 | 3375 | SK 2382 - 80LH/4 | | |
| | 14 | 4470 | 1.0 | I | 116.35 | 1870 | 2700 | 2889 | 3375 | | | |
| | 13 | 5066 | 0.9 | * | 131.86 | 1739 | 2700 | 2806 | 3375 | | | |
| | 11 | 5761 | 0.8 | * | 149.96 | 1546 | 2700 | 2691 | 3375 | | | |
| | 30 | 2143 | 2.7 | III | 55.79 | 2507 | 3263 | 4878 | 4500 | **SK 3282 - 80L/4** | 108 | 336 |
| | 25 | 2531 | 2.7 | III | 65.89 | 2630 | 3263 | 5119 | 4500 | SK 3282 - 80LH/4 | | |
| | 23 | 2711 | 1.8 | II | 70.56 | 2673 | 3263 | 5114 | 4500 | | | |
| | 21 | 3064 | 2.5 | III | 79.76 | 2772 | 3263 | 5103 | 4500 | | | |
| | 19 | 3409 | 2.5 | III | 88.74 | 2849 | 3263 | 5092 | 4500 | | | |
| | 16 | 3876 | 1.8 | II | 100.88 | 2936 | 3263 | 5076 | 4500 | | | |
| | 15 | 4312 | 1.6 | II | 112.23 | 3015 | 3263 | 5058 | 4500 | | | |

(AGMA Class I = $f_B$ 1.0 - 1.39 II = $f_B$ 1.4 - 1.99 III = $f_B$ ≥ 2.0 * = $f_B$ < 1.0) **(Model Type in blue is an Energy Efficient motor)**


Send Quote Requests to info@automatedpt.com
Call +1(800)985-6929 To Order or Order Online At Nordgearmotors.com

DRIVESYSTEMS



# 1.0 hp Gearmotors



| Motor Power $P_n$ [hp] | Output Speed $n_2$ [rpm] | Output Torque $T_2$ [lb-in] | Service Factor $f_B$ | AGMA Class | Gear Ratio $i_{tot}$ | Standard Bearings $F_{RN}$ OHL [lb] | Standard Bearings $F_{AN}$ Thrust [lb] | Heavy Duty Bearings (VL) $F_{RVL}$ OHL [lb] | Heavy Duty Bearings (VL) $F_{AVL}$ Thrust [lb] | Model Type | Weight [lb] | Dim. Page |
|---|---|---|---|---|---|---|---|---|---|---|---|---|
| 1.0 | 13 | 4876 | 1.4 | II | 126.93 | 3071 | 3263 | 5031 | 4500 | SK 3382 - 80L/4 | 126 | 338 |
| | 10 | 6203 | 1.1 | I | 161.46 | 3229 | 3263 | 4957 | 4500 | SK 3382 - 80LH/4 | | |
| | 8.7 | 7326 | 1.0 | I | 190.69 | 3312 | 3263 | 4878 | 4500 | | | |
| | 7.1 | 8868 | 1.0 | I | 230.83 | 3114 | 3263 | 4748 | 4500 | | | |
| | 5.7 | 11031 | 0.8 | * | 287.14 | 2743 | 3263 | 4511 | 4500 | | | |
| | 25 | 2560 | 3.8 | III | 66.65 | 3913 | 4950 | 6908 | 6750 | SK 4382 - 80L/4 | 174 | 342 |
| | 19 | 3336 | 3.6 | III | 86.83 | 4228 | 4950 | 6899 | 6750 | SK 4382 - 80LH/4 | | |
| | 16 | 3988 | 3.6 | III | 103.82 | 4457 | 4950 | 6887 | 6750 | | | |
| | 14 | 4548 | 3.4 | III | 118.38 | 4626 | 4950 | 6876 | 6750 | | | |
| | 12 | 5401 | 3.2 | III | 140.60 | 4840 | 4950 | 6856 | 6750 | | | |
| | 10 | 6154 | 2.4 | III | 160.20 | 4858 | 4950 | 6833 | 6750 | | | |
| | 8.6 | 7360 | 2.4 | III | 191.57 | 4804 | 4950 | 6795 | 6750 | | | |
| | 7.8 | 8109 | 1.8 | II | 211.09 | 4766 | 4950 | 6768 | 6750 | | | |
| | 6.5 | 9724 | 1.8 | II | 253.12 | 4667 | 4950 | 6698 | 6750 | | | |
| | 6.1 | 10470 | 1.3 | I | 272.54 | 4613 | 4950 | 6662 | 6750 | | | |
| | 5.5 | 11627 | 1.6 | II | 302.65 | 4523 | 4950 | 6599 | 6750 | | | |
| | 5 | 12555 | 1.3 | I | 326.81 | 4442 | 4950 | 6543 | 6750 | | | |
| | 4.8 | 13248 | 1.1 | I | 344.84 | 4374 | 4950 | 6500 | 6750 | | | |
| | 4.2 | 15012 | 1.2 | I | 390.76 | 4187 | 4950 | 6374 | 6750 | | | |
| | 4 | 15842 | 1.1 | I | 412.38 | 4086 | 4950 | 6309 | 6750 | | | |
| | 3.7 | 17104 | 0.9 | * | 445.23 | 3917 | 4950 | 6201 | 6750 | | | |
| | 3.1 | 20455 | 0.9 | * | 532.44 | 3355 | 4950 | 5861 | 6750 | | | |
| | 8.1 | 7782 | 3.3 | III | 202.57 | 7081 | 7200 | 9988 | 9000 | SK 5382 - 80L/4 | 262 | 346 |
| | 6.6 | 9554 | 3.0 | III | 248.70 | 7029 | 7200 | 9950 | 9000 | SK 5382 - 80LH/4 | | |
| | 6.1 | 10372 | 2.3 | III | 269.99 | 7000 | 7200 | 9929 | 9000 | | | |
| | 5 | 12734 | 2.2 | III | 331.48 | 6905 | 7200 | 9862 | 9000 | | | |
| | 4.6 | 13895 | 1.8 | II | 361.69 | 6849 | 7200 | 9824 | 9000 | | | |
| | 3.9 | 16434 | 1.7 | II | 427.79 | 6712 | 7200 | 9729 | 9000 | | | |
| | 3.1 | 20177 | 1.4 | II | 525.20 | 6460 | 7200 | 9556 | 9000 | | | |
| | 2.9 | 21905 | 1.1 | I | 570.18 | 6323 | 7200 | 9464 | 9000 | | | |
| | 2.4 | 26893 | 1.1 | I | 700.03 | 5837 | 7200 | 9146 | 9000 | | | |
| | 5.5 | 10854 | 4.1 | III | 298.46 | 9374 | 10463 | 13169 | 13500 | SK 6382/22 - 80L/4 | 441 | 374 |
| | 4.8 | 12632 | 3.8 | III | 347.33 | 9329 | 10463 | 13138 | 13500 | SK 6382/22 - 80LH/4 | | |
| | 3.8 | 15831 | 3.0 | III | 435.29 | 9230 | 10463 | 13068 | 13500 | | | |
| | 2.9 | 20697 | 2.3 | III | 569.11 | 9036 | 10463 | 12931 | 13500 | | | |
| | 2.6 | 23186 | 2.1 | III | 637.53 | 8912 | 10463 | 12845 | 13500 | | | |
| | 2 | 29775 | 1.6 | II | 818.71 | 8512 | 10463 | 12571 | 13500 | | | |
| | 1.5 | 40165 | 1.2 | I | 1104.39 | 7610 | 10463 | 11977 | 13500 | | | |
| | 1.3 | 45797 | 1.0 | I | 1259.27 | 6944 | 10463 | 11565 | 13500 | | | |
| | 4.4 | 13684 | 4.2 | III | 376.26 | 13205 | 13050 | 18504 | 18000 | SK 7382/22 - 80L/4 | 602 | 374 |
| | 3.8 | 15838 | 4.0 | III | 435.50 | 13174 | 13050 | 18479 | 18000 | SK 7382/22 - 80LH/4 | | |
| | 2.9 | 20729 | 3.0 | III | 569.97 | 13079 | 13050 | 18414 | 18000 | | | |
| | 2.3 | 25978 | 2.4 | III | 714.31 | 12953 | 13050 | 18324 | 18000 | | | |
| | 1.8 | 33965 | 1.8 | II | 933.91 | 12699 | 13050 | 18144 | 18000 | | | |
| | 1.6 | 38048 | 1.6 | II | 1046.18 | 12539 | 13050 | 18034 | 18000 | | | |
| | 1.2 | 48861 | 1.3 | I | 1343.50 | 12020 | 13050 | 17676 | 18000 | | | |
| | 1.5 | 38729 | 2.8 | III | 1064.91 | 20756 | 16425 | 22500 | 22500 | SK 8382/32 - 80L/4 | 902 | 374 |
| | 1.2 | 49709 | 2.2 | III | 1366.83 | 20536 | 16425 | 22500 | 22500 | SK 8382/32 - 80LH/4 | | |

(AGMA Class I = $f_B$ 1.0 - 1.39 II = $f_B$ 1.4 - 1.99 III = $f_B$ ≥ 2.0 * = $f_B$ < 1.0) **(Model Type in blue is an Energy Efficient motor)**


Send Quote Requests to info@automatedpt.com
Call +1(800)985-6929 To Order or Order Online At Nordgearmotors.com

# 1.5 hp Gearmotors



DRIVESYSTEMS

GEARMOTORS

| Motor Power $P_n$ [hp] | Output Speed $n_2$ [rpm] | Output Torque $T_2$ [lb-in] | Service Factor $f_B$ | AGMA Class | Gear Ratio $i_{tot}$ | Standard Bearings $F_{RN}$ OHL [lb] | Standard Bearings $F_{AN}$ Thrust [lb] | Heavy Duty Bearings (VL) $F_{RVL}$ OHL [lb] | Heavy Duty Bearings (VL) $F_{AVL}$ Thrust [lb] | Model Type | Weight [lb] | Dim. Page |
|---|---|---|---|---|---|---|---|---|---|---|---|---|
| 1.5 | 392 | 241 | 2.7 | III | 4.24 | 468 | 747 | 1125 | 1890 | **SK 0182NB - 90S/4** | 35 | 312 |
| | 311 | 305 | 2.7 | III | 5.34 | 500 | 817 | 1125 | 1890 | SK 0182NB - 90SH/4 | | |
| | 261 | 362 | 2.7 | III | 6.35 | 522 | 871 | 1125 | 1890 | | | |
| | 412 | 230 | 3.3 | III | 4.03 | 459 | 758 | 1438 | 1125 | **SK 0282NB - 90S/4** | 44 | 318 |
| | 356 | 266 | 3.2 | III | 4.66 | 477 | 801 | 1501 | 1125 | SK 0282NB - 90SH/4 | | |
| | 321 | 295 | 3.3 | III | 5.17 | 491 | 835 | 1550 | 1125 | | | |
| | 277 | 342 | 3.1 | III | 5.99 | 511 | 882 | 1611 | 1125 | | | |
| | 258 | 367 | 3.0 | III | 6.44 | 522 | 907 | 1647 | 1125 | | | |
| | 223 | 425 | 2.7 | III | 7.45 | 542 | 954 | 1658 | 1125 | | | |
| | 189 | 502 | 2.4 | III | 8.80 | 567 | 1015 | 1654 | 1125 | | | |
| | 172 | 550 | 2.3 | III | 9.64 | 581 | 1049 | 1652 | 1125 | | | |
| | 151 | 626 | 2.1 | III | 10.98 | 594 | 1089 | 1647 | 1125 | | | |
| | 148 | 642 | 1.9 | II | 11.25 | 603 | 1109 | 1647 | 1125 | | | |
| | 128 | 740 | 1.9 | II | 12.98 | 617 | 1125 | 1640 | 1125 | | | |
| | 117 | 810 | 1.8 | II | 14.21 | 632 | 1125 | 1634 | 1125 | | | |
| | 100 | 945 | 1.3 | I | 16.58 | 650 | 1125 | 1622 | 1125 | | | |
| | 94 | 1004 | 1.1 | I | 17.61 | 659 | 1125 | 1616 | 1125 | | | |
| | 83 | 1138 | 1.0 | I | 19.95 | 673 | 1125 | 1602 | 1125 | | | |
| | 347 | 273 | 4.1 | III | 4.79 | 547 | 999 | 1591 | 1609 | **SK 1282 - 90S/4** | 57 | 330 |
| | 303 | 312 | 4.1 | III | 5.47 | 567 | 1051 | 1652 | 1609 | SK 1282 - 90SH/4 | | |
| | 258 | 367 | 3.9 | III | 6.43 | 592 | 1116 | 1728 | 1609 | | | |
| | 229 | 413 | 3.8 | III | 7.24 | 612 | 1168 | 1791 | 1609 | | | |
| | 202 | 468 | 3.0 | III | 8.21 | 639 | 1235 | 1856 | 1609 | | | |
| | 201 | 470 | 3.6 | III | 8.24 | 635 | 1224 | 1854 | 1609 | | | |
| | 181 | 523 | 3.2 | III | 9.18 | 655 | 1287 | 1913 | 1609 | | | |
| | 161 | 590 | 2.9 | III | 10.34 | 675 | 1339 | 1976 | 1609 | | | |
| | 141 | 671 | 2.7 | III | 11.76 | 698 | 1400 | 2045 | 1609 | | | |
| | 118 | 805 | 2.3 | III | 14.11 | 731 | 1499 | 2158 | 1609 | | | |
| | 96 | 981 | 2.0 | III | 17.21 | 763 | 1609 | 2149 | 1609 | | | |
| | 81 | 1173 | 1.7 | II | 20.57 | 792 | 1609 | 2140 | 1609 | | | |
| | 66 | 1438 | 1.4 | II | 25.22 | 826 | 1609 | 2122 | 1609 | | | |
| | 59 | 1615 | 1.2 | I | 28.33 | 842 | 1609 | 2108 | 1609 | | | |
| | 52 | 1829 | 1.1 | I | 32.08 | 857 | 1609 | 2088 | 1609 | | | |
| | 102 | 928 | 2.2 | III | 16.28 | 943 | 1577 | 1800 | 2363 | **SK 1382NB - 90S/4** | 71 | 324 |
| | 89 | 1069 | 2.0 | III | 18.75 | 974 | 1609 | 1800 | 2363 | SK 1382NB - 90SH/4 | | |
| | 68 | 1383 | 1.8 | II | 24.26 | 1028 | 1609 | 1800 | 2363 | | | |
| | 64 | 1483 | 1.6 | II | 26.01 | 1044 | 1609 | 1800 | 2363 | | | |
| | 56 | 1699 | 1.5 | II | 29.79 | 1069 | 1609 | 1800 | 2363 | | | |
| | 46 | 2039 | 1.3 | I | 35.75 | 1100 | 1609 | 1800 | 2363 | | | |
| | 43 | 2211 | 1.3 | I | 38.77 | 1114 | 1609 | 1800 | 2363 | | | |
| | 37 | 2532 | 1.2 | I | 44.40 | 1127 | 1609 | 1800 | 2363 | | | |
| | 31 | 3038 | 1.0 | I | 53.28 | 1145 | 1609 | 1800 | 2363 | | | |
| | 28 | 3421 | 1.0 | I | 60.00 | 1150 | 1609 | 1800 | 2363 | | | |
| | 24 | 3891 | 0.8 | * | 68.23 | 1015 | 1609 | 1800 | 2363 | | | |
| | 100 | 943 | 3.8 | III | 16.53 | 1546 | 2700 | 2986 | 3375 | **SK 2282 - 90S/4** | 82 | 332 |
| | 90 | 1056 | 3.7 | III | 18.51 | 1595 | 2700 | 3085 | 3375 | SK 2282 - 90SH/4 | | |
| | 76 | 1249 | 3.4 | III | 21.90 | 1674 | 2700 | 3146 | 3375 | | | |
| | 69 | 1366 | 2.8 | III | 23.96 | 1721 | 2700 | 3141 | 3375 | | | |
| | 66 | 1424 | 3.0 | III | 24.97 | 1735 | 2700 | 3139 | 3375 | | | |
| | 62 | 1530 | 2.5 | III | 26.83 | 1773 | 2700 | 3134 | 3375 | | | |
| | 56 | 1691 | 2.6 | III | 29.65 | 1818 | 2700 | 3128 | 3375 | | | |
| | 53 | 1781 | 2.2 | III | 31.23 | 1827 | 2700 | 3123 | 3375 | | | |
| | 45 | 2084 | 2.1 | III | 36.54 | 1906 | 2700 | 3107 | 3375 | | | |

(AGMA Class I = $f_B$ 1.0 - 1.39 II = $f_B$ 1.4 - 1.99 III = $f_B$ ≥ 2.0 * = $f_B$ < 1.0) **(Model Type in blue is an Energy Efficient motor)**


Send Quote Requests to info@automatedpt.com
Call +1(800)985-6929 To Order or Order Online At Nordgearmotors.com

DRIVESYSTEMS

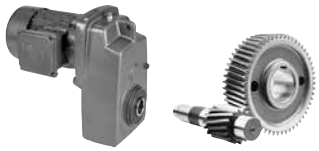

# 1.5 hp Gearmotors



| Motor Power $P_n$ [hp] | Output Speed $n_2$ [rpm] | Output Torque $T_2$ [lb-in] | Service Factor $f_B$ | AGMA Class | Gear Ratio $i_{tot}$ | Standard Bearings $F_{RN}$ OHL [lb] | Standard Bearings $F_{AN}$ Thrust [lb] | Heavy Duty Bearings (VL) $F_{RVL}$ OHL [lb] | Heavy Duty Bearings (VL) $F_{AVL}$ Thrust [lb] | Model Type | Weight [lb] | Dim. Page |
|---|---|---|---|---|---|---|---|---|---|---|---|---|
| 1.5 | 45 | 2120 | 1.9 | II | 37.18 | 1924 | 2700 | 3105 | 3375 | SK 2282 - 90S/4 | 82 | 332 |
| | 38 | 2493 | 2.0 | III | 43.71 | 1996 | 2700 | 3083 | 3375 | SK 2282 - 90SH/4 | | |
| | 37 | 2572 | 1.5 | II | 45.11 | 2005 | 2700 | 3076 | 3375 | | | |
| | 32 | 2949 | 1.6 | II | 51.71 | 2077 | 2700 | 3049 | 3375 | | | |
| | 31 | 3077 | 1.5 | II | 53.96 | 2093 | 2700 | 3038 | 3375 | | | |
| | 26 | 3640 | 1.3 | I | 63.83 | 2016 | 2700 | 2986 | 3375 | | | |
| | 24 | 3973 | 1.0 | I | 69.67 | 1962 | 2700 | 2950 | 3375 | | | |
| | 20 | 4700 | 0.9 | * | 82.42 | 1823 | 2700 | 2858 | 3375 | | | |
| | 20 | 4689 | 1.1 | I | 82.22 | 1825 | 2700 | 2860 | 3375 | SK 2382 - 90S/4 | 97 | 334 |
| | 17 | 5608 | 0.9 | * | 98.35 | 1593 | 2700 | 2718 | 3375 | SK 2382 - 90SH/4 | | |
| | 44 | 2154 | 3.4 | III | 37.77 | 2185 | 3263 | 4318 | 4500 | SK 3282 - 90S/4 | 115 | 336 |
| | 43 | 2202 | 2.5 | III | 38.62 | 2176 | 3263 | 4325 | 4500 | SK 3282 - 90SH/4 | | |
| | 40 | 2396 | 3.4 | III | 42.02 | 2248 | 3263 | 4448 | 4500 | | | |
| | 37 | 2558 | 2.6 | III | 44.85 | 2270 | 3263 | 4509 | 4500 | | | |
| | 35 | 2739 | 1.8 | II | 48.04 | 2297 | 3263 | 4583 | 4500 | | | |
| | 31 | 3021 | 2.5 | III | 52.97 | 2374 | 3263 | 4712 | 4500 | | | |
| | 30 | 3181 | 1.8 | II | 55.79 | 2396 | 3263 | 4775 | 4500 | | | |
| | 26 | 3656 | 2.5 | III | 64.12 | 2486 | 3263 | 4961 | 4500 | | | |
| | 25 | 3757 | 1.8 | II | 65.89 | 2498 | 3263 | 4984 | 4500 | | | |
| | 24 | 4024 | 1.2 | I | 70.56 | 2520 | 3263 | 5069 | 4500 | | | |
| | 21 | 4548 | 1.7 | II | 79.76 | 2608 | 3263 | 5047 | 4500 | | | |
| | 19 | 5060 | 1.7 | II | 88.74 | 2675 | 3263 | 5022 | 4500 | | | |
| | 16 | 5753 | 1.2 | I | 100.88 | 2734 | 3263 | 4984 | 4500 | | | |
| | 15 | 6400 | 1.1 | I | 112.23 | 2788 | 3263 | 4943 | 4500 | | | |
| | 18 | 5162 | 2.7 | III | 90.52 | 4138 | 4950 | 6860 | 6750 | SK 4282 - 90S/4 | 148 | 340 |
| | 15 | 6317 | 2.2 | III | 110.78 | 4365 | 4950 | 6829 | 6750 | SK 4282 - 90SH/4 | | |
| | 11 | 8862 | 1.3 | I | 155.40 | 4721 | 4950 | 6737 | 6750 | | | |
| | 12 | 8018 | 2.2 | III | 140.60 | 4590 | 4950 | 6770 | 6750 | SK 4382 - 90S/4 | 181 | 342 |
| | 10 | 9135 | 1.6 | II | 160.20 | 4705 | 4950 | 6725 | 6750 | SK 4382 - 90SH/4 | | |
| | 8.7 | 10924 | 1.6 | II | 191.57 | 4579 | 4950 | 6638 | 6750 | | | |
| | 7.9 | 12037 | 1.2 | I | 211.09 | 4487 | 4950 | 6575 | 6750 | | | |
| | 6.6 | 14434 | 1.2 | I | 253.12 | 4253 | 4950 | 6417 | 6750 | | | |
| | 6.1 | 15541 | 0.9 | * | 272.54 | 4122 | 4950 | 6332 | 6750 | | | |
| | 5.5 | 17258 | 1.1 | I | 302.65 | 3895 | 4950 | 6185 | 6750 | | | |
| | 5.1 | 18636 | 0.9 | * | 326.81 | 3683 | 4950 | 6055 | 6750 | | | |
| | 4.2 | 22283 | 0.8 | * | 390.76 | 2954 | 4950 | 5641 | 6750 | | | |
| | 17 | 5713 | 3.5 | III | 100.19 | 6073 | 7200 | 10022 | 9000 | SK 5282 - 90S/4 | 227 | 344 |
| | 12 | 7643 | 3.1 | III | 134.03 | 6602 | 7200 | 9990 | 9000 | SK 5282 - 90SH/4 | | |
| | 14 | 6693 | 3.6 | III | 117.37 | 6323 | 7200 | 10006 | 9000 | SK 5382 - 90S/4 | 269 | 346 |
| | 12 | 7916 | 3.6 | III | 138.82 | 6626 | 7200 | 9983 | 9000 | SK 5382 - 90SH/4 | | |
| | 11 | 8777 | 3.2 | III | 153.92 | 6818 | 7200 | 9968 | 9000 | | | |
| | 9.7 | 9766 | 2.5 | III | 171.27 | 6998 | 7200 | 9945 | 9000 | | | |
| | 8.2 | 11551 | 2.5 | III | 202.57 | 6955 | 7200 | 9898 | 9000 | | | |
| | 6.7 | 14182 | 2.0 | III | 248.70 | 6836 | 7200 | 9815 | 9000 | | | |
| | 6.1 | 15396 | 1.6 | II | 269.99 | 6773 | 7200 | 9770 | 9000 | | | |
| | 5 | 18902 | 1.5 | II | 331.48 | 6552 | 7200 | 9619 | 9000 | | | |
| | 4.6 | 20625 | 1.2 | I | 361.69 | 6426 | 7200 | 9533 | 9000 | | | |
| | 3.9 | 24394 | 1.2 | I | 427.79 | 6095 | 7200 | 9315 | 9000 | | | |
| | 3.2 | 29949 | 0.9 | * | 525.20 | 5463 | 7200 | 8912 | 9000 | | | |
| | 2.9 | 32514 | 0.8 | * | 570.18 | 5094 | 7200 | 8692 | 9000 | | | |

(AGMA Class I = $f_B$ 1.0 - 1.39 II = $f_B$ 1.4 - 1.99 III = $f_B$ ≥ 2.0 * = $f_B$ < 1.0) **(Model Type in blue is an Energy Efficient motor)**


Send Quote Requests to info@automatedpt.com
Call +1(800)985-6929 To Order or Order Online At Nordgearmotors.com

# 1.5 hp, 2.0 hp Gearmotors



DRIVESYSTEMS



| Motor Power $P_n$ [hp] | Output Speed $n_2$ [rpm] | Output Torque $T_2$ [lb-in] | Service Factor $f_B$ | AGMA Class | Gear Ratio $i_{tot}$ | Standard Bearings $F_{RN}$ OHL [lb] | Standard Bearings $F_{AN}$ Thrust [lb] | Heavy Duty Bearings (VL) $F_{RVL}$ OHL [lb] | Heavy Duty Bearings (VL) $F_{AVL}$ Thrust [lb] | Model Type | Weight [lb] | Dim. Page |
|---|---|---|---|---|---|---|---|---|---|---|---|---|
| 1.5 | 7.4 | 12875 | 2.8 | III | 225.79 | 9322 | 10463 | 13133 | 13500 | **SK 6382 - 90S/4** | 406 | 350 |
| | 6.6 | 14356 | 2.8 | III | 251.76 | 9279 | 10463 | 13102 | 13500 | **SK 6382 - 90SH/4** | | |
| | 5.2 | 18093 | 2.8 | III | 317.28 | 9146 | 10463 | 13010 | 13500 | | | |
| | 4.2 | 22421 | 2.3 | III | 393.19 | 8953 | 10463 | 12872 | 13500 | | | |
| | 3.7 | 25381 | 1.5 | II | 445.09 | 8793 | 10463 | 12762 | 13500 | | | |
| | 3 | 31453 | 1.5 | II | 551.58 | 8390 | 10463 | 12488 | 13500 | | | |
| | 2.9 | 32453 | 1.5 | II | 569.11 | 8314 | 10463 | 12438 | 13500 | **SK 6382/22 - 90S/4** | 448 | 374 |
| | 2.6 | 36354 | 1.3 | I | 637.53 | 7983 | 10463 | 12220 | 13500 | **SK 6382/22 - 90SH/4** | | |
| | 2 | 46686 | 1.0 | I | 818.71 | 6822 | 10463 | 11495 | 13500 | | | |
| | 1.5 | 62977 | 0.8 | * | 1104.39 | 3283 | 10463 | 9815 | 13500 | | | |
| | 4.4 | 21456 | 2.9 | III | 376.26 | 13064 | 13050 | 18403 | 18000 | **SK 7382/22 - 90S/4** | 609 | 374 |
| | 3.8 | 24834 | 2.5 | III | 435.50 | 12983 | 13050 | 18344 | 18000 | **SK 7382/22 - 90SH/4** | | |
| | 2.9 | 32502 | 1.9 | II | 569.97 | 12751 | 13050 | 18180 | 18000 | | | |
| | 2.3 | 40733 | 1.5 | II | 714.31 | 12425 | 13050 | 17955 | 18000 | | | |
| | 1.8 | 53255 | 1.2 | I | 933.91 | 11765 | 13050 | 17503 | 18000 | | | |
| | 1.6 | 59657 | 1.1 | I | 1046.18 | 11340 | 13050 | 17222 | 18000 | | | |
| | 1.2 | 76612 | 0.8 | * | 1343.5 | 9860 | 13050 | 16283 | 18000 | | | |
| | 2.3 | 40968 | 2.6 | III | 718.43 | 20716 | 16425 | 22500 | 22500 | **SK 8382/32 - 90S/4** | 908 | 374 |
| | 1.9 | 50820 | 2.1 | III | 891.21 | 20511 | 16425 | 22500 | 22500 | **SK 8382/32 - 90SH/4** | | |
| | 1.6 | 60725 | 1.8 | II | 1064.91 | 20259 | 16425 | 22500 | 22500 | | | |
| | 1.2 | 77942 | 1.4 | II | 1366.83 | 19703 | 16425 | 22500 | 22500 | | | |
| | 0.98 | 96818 | 1.1 | I | 1697.85 | 18909 | 16425 | 22500 | 22500 | | | |
| | 1.2 | 80928 | 2.6 | III | 1419.2 | 27000 | 22950 | 27000 | 29250 | **SK 9382/42 - 90S/4** | 1607 | 375 |
| | 0.95 | 99645 | 2.1 | III | 1747.42 | 27000 | 22950 | 27000 | 29250 | **SK 9382/42 - 90SH/4** | | |
| 2.0 | 412 | 306 | 2.5 | III | 4.03 | 443 | 734 | 1429 | 1125 | **SK 0282NB - 90L/4** | 49 | 318 |
| | 356 | 354 | 2.4 | III | 4.66 | 461 | 772 | 1487 | 1125 | **SK 0282NB - 90LH/4** | | |
| | 321 | 392 | 2.5 | III | 5.17 | 475 | 806 | 1535 | 1125 | | | |
| | 277 | 454 | 2.4 | III | 5.99 | 493 | 846 | 1598 | 1125 | | | |
| | 258 | 489 | 2.2 | III | 6.44 | 502 | 871 | 1631 | 1125 | | | |
| | 223 | 565 | 2.1 | III | 7.45 | 520 | 914 | 1652 | 1125 | | | |
| | 189 | 668 | 1.8 | II | 8.80 | 540 | 965 | 1645 | 1125 | | | |
| | 172 | 731 | 1.7 | II | 9.64 | 551 | 995 | 1640 | 1125 | | | |
| | 151 | 833 | 1.6 | II | 10.98 | 558 | 1026 | 1631 | 1125 | | | |
| | 148 | 853 | 1.5 | II | 11.25 | 567 | 1044 | 1631 | 1125 | | | |
| | 128 | 985 | 1.4 | II | 12.98 | 576 | 1078 | 1618 | 1125 | | | |
| | 117 | 1078 | 1.3 | I | 14.21 | 587 | 1109 | 1609 | 1125 | | | |
| | 100 | 1258 | 1.0 | I | 16.58 | 599 | 1125 | 1586 | 1125 | | | |
| | 94 | 1336 | 0.9 | * | 17.61 | 605 | 1125 | 1577 | 1125 | | | |
| | 83 | 1513 | 0.8 | * | 19.95 | 610 | 1125 | 1550 | 1125 | | | |
| | 347 | 363 | 3.1 | III | 4.79 | 533 | 972 | 1577 | 1609 | **SK 1282 - 90L/4** | 62 | 330 |
| | 303 | 415 | 3.1 | III | 5.47 | 551 | 1022 | 1636 | 1609 | **SK 1282 - 90LH/4** | | |
| | 258 | 488 | 3.0 | III | 6.43 | 574 | 1082 | 1712 | 1609 | | | |
| | 229 | 549 | 2.8 | III | 7.24 | 590 | 1130 | 1771 | 1609 | | | |
| | 202 | 623 | 2.3 | III | 8.21 | 619 | 1199 | 1841 | 1609 | | | |
| | 201 | 625 | 2.7 | III | 8.24 | 608 | 1186 | 1829 | 1609 | | | |
| | 181 | 696 | 2.4 | III | 9.18 | 630 | 1235 | 1890 | 1609 | | | |
| | 161 | 784 | 2.2 | III | 10.34 | 648 | 1287 | 1951 | 1609 | | | |
| | 141 | 892 | 2.0 | III | 11.76 | 666 | 1341 | 2016 | 1609 | | | |
| | 118 | 1070 | 1.7 | II | 14.11 | 693 | 1429 | 2117 | 1609 | | | |

(AGMA Class I = $f_B$ 1.0 - 1.39 II = $f_B$ 1.4 - 1.99 III = $f_B$ ≥ 2.0 * = $f_B$ < 1.0) **(Model Type in blue is an Energy Efficient motor)**


Send Quote Requests to info@automatedpt.com
Call +1(800)985-6929 To Order or Order Online At Nordgearmotors.com

DRIVESYSTEMS



# 2.0 hp Gearmotors



| Motor Power $P_n$ [hp] | Output Speed $n_2$ [rpm] | Output Torque $T_2$ [lb-in] | Service Factor $f_B$ | AGMA Class | Gear Ratio $i_{tot}$ | Standard Bearings $F_{RN}$ OHL [lb] | Standard Bearings $F_{AN}$ Thrust [lb] | Heavy Duty Bearings (VL) $F_{RVL}$ OHL [lb] | Heavy Duty Bearings (VL) $F_{AVL}$ Thrust [lb] | Model Type | Weight [lb] | Dim. Page |
|---|---|---|---|---|---|---|---|---|---|---|---|---|
| 2.0 | 96 | 1306 | 1.5 | II | 17.21 | 716 | 1517 | 2131 | 1609 | SK 1282 - 90L/4<br>SK 1282 - 90LH/4 | 62 | 330 |
| | 81 | 1560 | 1.3 | I | 20.57 | 736 | 1600 | 2113 | 1609 | | | |
| | 66 | 1913 | 1.0 | I | 25.22 | 754 | 1609 | 2081 | 1609 | | | |
| | 59 | 2149 | 0.9 | * | 28.33 | 763 | 1609 | 2054 | 1609 | | | |
| | 52 | 2434 | 0.8 | * | 32.08 | 763 | 1609 | 2021 | 1609 | | | |
| | 102 | 1235 | 1.7 | II | 16.28 | 898 | 1492 | 1800 | 2363 | SK 1382NB - 90L/4<br>SK 1382NB - 90LH/4 | 75 | 324 |
| | 89 | 1422 | 1.5 | II | 18.75 | 923 | 1559 | 1800 | 2363 | | | |
| | 68 | 1840 | 1.3 | I | 24.26 | 963 | 1609 | 1800 | 2363 | | | |
| | 64 | 1973 | 1.2 | I | 26.01 | 970 | 1609 | 1800 | 2363 | | | |
| | 56 | 2260 | 1.1 | I | 29.79 | 981 | 1609 | 1800 | 2363 | | | |
| | 46 | 2712 | 1.0 | I | 35.75 | 992 | 1609 | 1800 | 2363 | | | |
| | 43 | 2941 | 1.0 | I | 38.77 | 995 | 1609 | 1800 | 2363 | | | |
| | 37 | 3368 | 0.9 | * | 44.40 | 992 | 1609 | 1800 | 2363 | | | |
| | 31 | 4042 | 0.8 | * | 53.28 | 947 | 1609 | 1800 | 2363 | | | |
| | 141 | 896 | 2.9 | III | 11.81 | 1375 | 2700 | 2691 | 3375 | SK 2282 - 90L/4<br>SK 2282 - 90LH/4 | 86 | 332 |
| | 125 | 1004 | 2.8 | III | 13.23 | 1413 | 2700 | 2777 | 3375 | | | |
| | 100 | 1254 | 2.9 | III | 16.53 | 1510 | 2700 | 2959 | 3375 | | | |
| | 90 | 1404 | 2.8 | III | 18.51 | 1555 | 2700 | 3049 | 3375 | | | |
| | 76 | 1661 | 2.6 | III | 21.90 | 1625 | 2700 | 3128 | 3375 | | | |
| | 69 | 1818 | 2.1 | III | 23.96 | 1667 | 2700 | 3121 | 3375 | | | |
| | 66 | 1894 | 2.3 | III | 24.97 | 1681 | 2700 | 3116 | 3375 | | | |
| | 62 | 2035 | 1.9 | II | 26.83 | 1715 | 2700 | 3110 | 3375 | | | |
| | 56 | 2249 | 2.0 | III | 29.65 | 1751 | 2700 | 3098 | 3375 | | | |
| | 53 | 2369 | 1.7 | II | 31.23 | 1755 | 2700 | 3089 | 3375 | | | |
| | 45 | 2772 | 1.6 | II | 36.54 | 1827 | 2700 | 3062 | 3375 | | | |
| | 45 | 2821 | 1.4 | II | 37.18 | 1843 | 2700 | 3058 | 3375 | | | |
| | 38 | 3316 | 1.5 | II | 43.71 | 1904 | 2700 | 3017 | 3375 | | | |
| | 37 | 3422 | 1.2 | I | 45.11 | 1899 | 2700 | 3006 | 3375 | | | |
| | 32 | 3923 | 1.2 | I | 51.71 | 1960 | 2700 | 2954 | 3375 | | | |
| | 31 | 4094 | 1.1 | I | 53.96 | 1942 | 2700 | 2936 | 3375 | | | |
| | 26 | 4842 | 1.0 | I | 63.83 | 1791 | 2700 | 2837 | 3375 | | | |
| | 70 | 1799 | 2.9 | III | 23.71 | 1865 | 3263 | 3755 | 4500 | SK 3282 - 90L/4<br>SK 3282 - 90LH/4 | 119 | 336 |
| | 64 | 1963 | 3.0 | III | 25.88 | 1917 | 3263 | 3850 | 4500 | | | |
| | 58 | 2177 | 2.9 | III | 28.7 | 1969 | 3263 | 3960 | 4500 | | | |
| | 52 | 2422 | 2.9 | III | 31.93 | 2025 | 3263 | 4070 | 4500 | | | |
| | 44 | 2865 | 2.6 | III | 37.77 | 2104 | 3263 | 4255 | 4500 | | | |
| | 43 | 2930 | 1.9 | II | 38.62 | 2093 | 3263 | 4262 | 4500 | | | |
| | 40 | 3188 | 2.6 | III | 42.02 | 2162 | 3263 | 4379 | 4500 | | | |
| | 37 | 3402 | 1.9 | II | 44.85 | 2174 | 3263 | 4428 | 4500 | | | |
| | 35 | 3644 | 1.3 | I | 48.04 | 2194 | 3263 | 4500 | 4500 | | | |
| | 31 | 4018 | 1.9 | II | 52.97 | 2259 | 3263 | 4626 | 4500 | | | |
| | 30 | 4232 | 1.3 | I | 55.79 | 2275 | 3263 | 4671 | 4500 | | | |
| | 26 | 4864 | 1.8 | II | 64.12 | 2356 | 3263 | 4849 | 4500 | | | |
| | 25 | 4999 | 1.3 | I | 65.89 | 2356 | 3263 | 4874 | 4500 | | | |
| | 21 | 6051 | 1.2 | I | 79.76 | 2444 | 3263 | 4966 | 4500 | | | |
| | 19 | 6732 | 1.2 | I | 88.74 | 2493 | 3263 | 4921 | 4500 | | | |
| | 37 | 3418 | 3.1 | III | 45.05 | 3344 | 4950 | 6489 | 6750 | SK 4282 - 90L/4<br>SK 4282 - 90LH/4 | 152 | 340 |
| | 22 | 5819 | 2.4 | III | 76.70 | 3818 | 4950 | 6845 | 6750 | | | |
| | 18 | 6867 | 2.1 | III | 90.52 | 3989 | 4950 | 6813 | 6750 | | | |
| | 15 | 8404 | 1.7 | II | 110.78 | 4183 | 4950 | 6757 | 6750 | | | |
| | 11 | 11789 | 1.0 | I | 155.40 | 4473 | 4950 | 6590 | 6750 | | | |

(AGMA Class I = $f_B$ 1.0 - 1.39 II = $f_B$ 1.4 - 1.99 III = $f_B$ ≥ 2.0 * = $f_B$ < 1.0) **(Model Type in blue is an Energy Efficient motor)**


Send Quote Requests to info@automatedpt.com
Call +1(800)985-6929 To Order or Order Online At Nordgearmotors.com

# 2.0 hp Gearmotors



DRIVESYSTEMS

GEARMOTORS

| Motor Power $P_n$ [hp] | Output Speed $n_2$ [rpm] | Output Torque $T_2$ [lb-in] | Service Factor $f_B$ | AGMA Class | Gear Ratio $i_{tot}$ | Standard Bearings $F_{RN}$ OHL [lb] | Standard Bearings $F_{AN}$ Thrust [lb] | Heavy Duty Bearings (VL) $F_{RVL}$ OHL [lb] | Heavy Duty Bearings (VL) $F_{AVL}$ Thrust [lb] | Model Type | Weight [lb] | Dim. Page |
|---|---|---|---|---|---|---|---|---|---|---|---|---|
| 2.0 | 10 | 12153 | 1.2 | I | 160.20 | 4435 | 4950 | 6568 | 6750 | **SK 4382 - 90L/4** | 185 | 342 |
| | 8.7 | 14533 | 1.2 | I | 191.57 | 4241 | 4950 | 6410 | 6750 | SK 4382 - 90LH/4 | | |
| | 7.9 | 16014 | 0.9 | * | 211.09 | 4064 | 4950 | 6293 | 6750 | | | |
| | 6.6 | 19202 | 0.9 | * | 253.12 | 3589 | 4950 | 5999 | 6750 | | | |
| | 5.5 | 22960 | 0.8 | * | 302.65 | 2781 | 4950 | 5553 | 6750 | | | |
| | 17 | 7601 | 2.6 | III | 100.19 | 5931 | 7200 | 9990 | 9000 | **SK 5282 - 90L/4** | 232 | 344 |
| | 12 | 10168 | 2.3 | III | 134.03 | 6415 | 7200 | 9934 | 9000 | SK 5282 - 90LH/4 | | |
| | 11 | 11677 | 2.4 | III | 153.92 | 6613 | 7200 | 9893 | 9000 | **SK 5382 - 90L/4** | 273 | 346 |
| | 9.7 | 12993 | 1.9 | II | 171.27 | 6739 | 7200 | 9855 | 9000 | SK 5382 - 90LH/4 | | |
| | 8.2 | 15367 | 1.8 | II | 202.57 | 6773 | 7200 | 9772 | 9000 | | | |
| | 6.7 | 18867 | 1.5 | II | 248.70 | 6554 | 7200 | 9621 | 9000 | | | |
| | 6.1 | 20482 | 1.2 | I | 269.99 | 6437 | 7200 | 9540 | 9000 | | | |
| | 5 | 25147 | 1.1 | I | 331.48 | 6021 | 7200 | 9266 | 9000 | | | |
| | 4.6 | 27439 | 0.9 | * | 361.69 | 5774 | 7200 | 9106 | 9000 | | | |
| | 3.9 | 32453 | 0.9 | * | 427.79 | 5103 | 7200 | 8696 | 9000 | | | |
| | 7.4 | 17129 | 2.1 | III | 225.79 | 9185 | 10463 | 13034 | 13500 | **SK 6382 - 90L/4** | 410 | 350 |
| | 6.6 | 19099 | 2.1 | III | 251.76 | 9106 | 10463 | 12980 | 13500 | SK 6382 - 90LH/4 | | |
| | 5.2 | 24070 | 2.1 | III | 317.28 | 8865 | 10463 | 12814 | 13500 | | | |
| | 4.2 | 29828 | 1.7 | II | 393.19 | 8507 | 10463 | 12569 | 13500 | | | |
| | 3.7 | 33765 | 1.1 | I | 445.09 | 8208 | 10463 | 12366 | 13500 | | | |
| | 3 | 41844 | 1.1 | I | 551.58 | 7425 | 10463 | 11862 | 13500 | | | |
| | 2.9 | 43174 | 1.1 | I | 569.11 | 7272 | 10463 | 11765 | 13500 | **SK 6382/22 - 90L/4** | 452 | 374 |
| | 2.6 | 48364 | 1.0 | I | 637.53 | 6586 | 10463 | 11354 | 13500 | SK 6382/22 - 90LH/4 | | |
| | 2 | 62109 | 0.8 | * | 818.71 | 3598 | 10463 | 9925 | 13500 | | | |
| | 4.4 | 28544 | 2.2 | III | 376.26 | 12879 | 13050 | 18272 | 18000 | **SK 7382/22 - 90L/4** | 613 | 374 |
| | 3.8 | 33038 | 1.9 | II | 435.50 | 12733 | 13050 | 18169 | 18000 | SK 7382/22 - 90LH/4 | | |
| | 2.9 | 43239 | 1.4 | II | 569.97 | 12310 | 13050 | 17874 | 18000 | | | |
| | 2.3 | 54189 | 1.2 | I | 714.31 | 11707 | 13050 | 17465 | 18000 | | | |
| | 1.8 | 70848 | 0.9 | * | 933.91 | 10427 | 13050 | 16634 | 18000 | | | |
| | 1.6 | 79365 | 0.8 | * | 1046.18 | 9558 | 13050 | 16103 | 18000 | | | |
| | 3.5 | 35543 | 3.0 | III | 468.52 | 18185 | 16425 | 22500 | 22500 | **SK 8382/42 - 90L/4** | 946 | 375 |
| | 3 | 41802 | 2.6 | III | 551.02 | 18923 | 16425 | 22500 | 22500 | SK 8382/42 - 90LH/4 | | |
| | 2.7 | 46499 | 2.3 | III | 612.94 | 19420 | 16425 | 22500 | 22500 | **SK 8382/32 - 90L/4** | 913 | 374 |
| | 2.3 | 54502 | 2.0 | III | 718.43 | 20129 | 16425 | 22500 | 22500 | SK 8382/32 - 90LH/4 | | |
| | 1.9 | 67609 | 1.6 | II | 891.21 | 20057 | 16425 | 22500 | 22500 | | | |
| | 1.6 | 80786 | 1.3 | I | 1064.91 | 19598 | 16425 | 22500 | 22500 | | | |
| | 1.2 | 103691 | 1.0 | I | 1366.83 | 18567 | 16425 | 22500 | 22500 | | | |
| | 0.98 | 128802 | 0.8 | * | 1697.85 | 17042 | 16425 | 22500 | 22500 | | | |
| | 1.9 | 67251 | 3.2 | III | 886.49 | 23886 | 22950 | 27000 | 29250 | **SK 9382/42 - 90L/4** | 1612 | 375 |
| | 1.4 | 89427 | 2.4 | III | 1178.81 | 25706 | 22950 | 27000 | 29250 | SK 9382/42 - 90LH/4 | | |
| | 1.2 | 107663 | 2.0 | III | 1419.20 | 26818 | 22950 | 27000 | 29250 | | | |
| | 0.95 | 132563 | 1.6 | II | 1747.42 | 27000 | 22950 | 27000 | 29250 | | | |

(AGMA Class I = $f_B$ 1.0 - 1.39 II = $f_B$ 1.4 - 1.99 III = $f_B$ ≥ 2.0 * = $f_B$ < 1.0) **(Model Type in blue is an Energy Efficient motor)**


Send Quote Requests to info@automatedpt.com
Call +1(800)985-6929 To Order or Order Online At Nordgearmotors.com

DRIVESYSTEMS



# 3.0 hp Gearmotors



| Motor Power $P_n$ [hp] | Output Speed $n_2$ [rpm] | Output Torque $T_2$ [lb-in] | Service Factor $f_B$ | AGMA Class | Gear Ratio $i_{tot}$ | Standard Bearings $F_{RN}$ OHL [lb] | Standard Bearings $F_{AN}$ Thrust [lb] | Heavy Duty Bearings (VL) $F_{RVL}$ OHL [lb] | Heavy Duty Bearings (VL) $F_{AVL}$ Thrust [lb] | Model Type | Weight [lb] | Dim. Page |
|---|---|---|---|---|---|---|---|---|---|---|---|---|
| **3.0** | 356 | 531 | 2.1 | III | 4.79 | 502 | 920 | 1541 | 1609 | **SK 1282 - 100L/4** | 71 | 330 |
| | 312 | 607 | 2.5 | III | 5.47 | 515 | 959 | 1595 | 1609 | SK 1282 - 100LH/4 | | |
| | 265 | 714 | 2.2 | III | 6.43 | 531 | 1008 | 1667 | 1609 | | | |
| | 235 | 804 | 2.1 | III | 7.24 | 545 | 1049 | 1719 | 1609 | | | |
| | 208 | 912 | 1.6 | II | 8.21 | 567 | 1107 | 1784 | 1609 | | | |
| | 207 | 915 | 1.8 | II | 8.24 | 554 | 1087 | 1775 | 1609 | | | |
| | 186 | 1019 | 1.6 | II | 9.18 | 574 | 1139 | 1832 | 1609 | | | |
| | 165 | 1148 | 1.5 | II | 10.34 | 583 | 1175 | 1886 | 1609 | | | |
| | 145 | 1306 | 1.4 | II | 11.76 | 590 | 1215 | 1944 | 1609 | | | |
| | 121 | 1567 | 1.2 | I | 14.11 | 608 | 1287 | 2039 | 1609 | | | |
| | 99 | 1911 | 1.0 | I | 17.21 | 614 | 1339 | 2081 | 1609 | | | |
| | 83 | 2284 | 0.9 | * | 20.57 | 612 | 1386 | 2039 | 1609 | | | |
| | 105 | 1808 | 1.1 | I | 16.28 | 799 | 1321 | 1800 | 2363 | **SK 1382NB - 100L/4** | 84 | 324 |
| | 91 | 2082 | 1.0 | I | 18.75 | 808 | 1357 | 1800 | 2363 | SK 1382NB - 100LH/4 | | |
| | 70 | 2694 | 0.9 | * | 24.26 | 810 | 1409 | 1800 | 2363 | | | |
| | 66 | 2888 | 0.8 | * | 26.01 | 810 | 1422 | 1800 | 2363 | | | |
| | 57 | 3308 | 0.8 | * | 29.79 | 797 | 1440 | 1800 | 2363 | | | |
| | 378 | 501 | 3.3 | III | 4.51 | 997 | 1816 | 2012 | 3375 | **SK 2282 - 100L/4** | 95 | 332 |
| | 298 | 635 | 3.0 | III | 5.72 | 1067 | 1989 | 2151 | 3375 | SK 2282 - 100LH/4 | | |
| | 265 | 714 | 2.8 | III | 6.43 | 1103 | 2081 | 2219 | 3375 | | | |
| | 228 | 831 | 2.6 | III | 7.48 | 1148 | 2205 | 2313 | 3375 | | | |
| | 204 | 929 | 2.4 | III | 8.37 | 1184 | 2300 | 2385 | 3375 | | | |
| | 189 | 1003 | 3.0 | III | 9.03 | 1217 | 2390 | 2446 | 3375 | | | |
| | 168 | 1127 | 2.8 | III | 10.15 | 1258 | 2491 | 2522 | 3375 | | | |
| | 144 | 1311 | 2.6 | III | 11.81 | 1305 | 2626 | 2626 | 3375 | | | |
| | 129 | 1469 | 2.4 | III | 13.23 | 1346 | 2700 | 2707 | 3375 | | | |
| | 103 | 1835 | 2.3 | III | 16.53 | 1429 | 2700 | 2880 | 3375 | | | |
| | 92 | 2055 | 2.1 | III | 18.51 | 1463 | 2700 | 2959 | 3375 | | | |
| | 78 | 2432 | 1.7 | II | 21.90 | 1519 | 2700 | 3087 | 3375 | | | |
| | 71 | 2660 | 1.4 | II | 23.96 | 1553 | 2700 | 3069 | 3375 | | | |
| | 68 | 2773 | 1.6 | II | 24.97 | 1559 | 2700 | 3062 | 3375 | | | |
| | 64 | 2979 | 1.3 | I | 26.83 | 1586 | 2700 | 3047 | 3375 | | | |
| | 58 | 3292 | 1.3 | I | 29.65 | 1607 | 2700 | 3020 | 3375 | | | |
| | 55 | 3468 | 1.1 | I | 31.23 | 1600 | 2700 | 3002 | 3375 | | | |
| | 47 | 4057 | 1.1 | I | 36.54 | 1640 | 2700 | 2939 | 3375 | | | |
| | 39 | 4853 | 1.0 | I | 43.71 | 1683 | 2700 | 2837 | 3375 | | | |
| | 33 | 5742 | 0.8 | * | 51.71 | 1553 | 2700 | 2693 | 3375 | | | |
| | 84 | 2241 | 3.1 | III | 20.18 | 1699 | 3263 | 3503 | 4500 | **SK 3282 - 100L/4** | 128 | 336 |
| | 80 | 2374 | 2.7 | III | 21.38 | 1717 | 3263 | 3553 | 4500 | SK 3282 - 100LH/4 | | |
| | 76 | 2493 | 2.8 | III | 22.45 | 1746 | 3263 | 3602 | 4500 | | | |
| | 72 | 2633 | 2.5 | III | 23.71 | 1757 | 3263 | 3647 | 4500 | | | |
| | 66 | 2874 | 2.6 | III | 25.88 | 1800 | 3263 | 3737 | 4500 | | | |
| | 59 | 3187 | 2.4 | III | 28.70 | 1841 | 3263 | 3839 | 4500 | | | |
| | 53 | 3545 | 2.2 | III | 31.93 | 1886 | 3263 | 3935 | 4500 | | | |
| | 45 | 4194 | 1.8 | II | 37.77 | 1944 | 3263 | 4097 | 4500 | | | |
| | 44 | 4288 | 1.3 | I | 38.62 | 1917 | 3263 | 4086 | 4500 | | | |
| | 41 | 4666 | 1.8 | II | 42.02 | 1987 | 3263 | 4205 | 4500 | | | |
| | 38 | 4980 | 1.3 | I | 44.85 | 1976 | 3263 | 4241 | 4500 | | | |
| | 32 | 5882 | 1.3 | I | 52.97 | 2027 | 3263 | 4406 | 4500 | | | |
| | 27 | 7120 | 1.3 | I | 64.12 | 2081 | 3263 | 4604 | 4500 | | | |

(AGMA Class I = $f_B$ 1.0 - 1.39 II = $f_B$ 1.4 - 1.99 III = $f_B$ ≥ 2.0 * = $f_B$ < 1.0) **(Model Type in blue is an Energy Efficient motor)**


Send Quote Requests to info@automatedpt.com
Call +1(800)985-6929 To Order or Order Online At Nordgearmotors.com

# 3.0 hp Gearmotors



DRIVESYSTEMS

GEARMOTORS

| Motor Power $P_n$ [hp] | Output Speed $n_2$ [rpm] | Output Torque $T_2$ [lb-in] | Service Factor $f_B$ | AGMA Class | Gear Ratio $i_{tot}$ | Standard Bearings $F_{RN}$ OHL [lb] | Standard Bearings $F_{AN}$ Thrust [lb] | Heavy Duty Bearings (VL) $F_{RVL}$ OHL [lb] | Heavy Duty Bearings (VL) $F_{AVL}$ Thrust [lb] | Model Type | Weight [lb] | Dim. Page |
|---|---|---|---|---|---|---|---|---|---|---|---|---|
| 3.0 | 53 | 3591 | 3.4 | III | 32.34 | 2921 | 4950 | 5778 | 6750 | **SK 4282 - 100L/4** | 161 | 340 |
| | 47 | 4042 | 3.0 | III | 36.40 | 2975 | 4950 | 5931 | 6750 | SK 4282 - 100LH/4 | | |
| | 46 | 4087 | 2.9 | III | 36.81 | 3013 | 4950 | 5978 | 6750 | | | |
| | 42 | 4524 | 3.0 | III | 40.74 | 3098 | 4950 | 6156 | 6750 | | | |
| | 39 | 4847 | 2.9 | III | 43.65 | 3125 | 4950 | 6228 | 6750 | | | |
| | 38 | 5002 | 2.8 | III | 45.05 | 3175 | 4950 | 6305 | 6750 | | | |
| | 33 | 5796 | 2.8 | III | 52.20 | 3263 | 4950 | 6523 | 6750 | | | |
| | 28 | 6840 | 2.3 | III | 61.60 | 3398 | 4950 | 6813 | 6750 | | | |
| | 23 | 8371 | 1.7 | II | 75.39 | 3553 | 4950 | 6757 | 6750 | | | |
| | 22 | 8517 | 1.7 | II | 76.70 | 3535 | 4950 | 6752 | 6750 | | | |
| | 19 | 10051 | 1.4 | II | 90.52 | 3656 | 4950 | 6683 | 6750 | | | |
| | 15 | 12301 | 1.2 | I | 110.78 | 3796 | 4950 | 6559 | 6750 | | | |
| | 31 | 6207 | 3.7 | III | 55.90 | 4822 | 7200 | 9421 | 9000 | **SK 5282 - 100L/4** | 240 | 344 |
| | 25 | 7621 | 3.4 | III | 68.63 | 5108 | 7200 | 9956 | 9000 | SK 5282 - 100LH/4 | | |
| | 21 | 9062 | 1.8 | II | 81.61 | 5312 | 7200 | 9961 | 9000 | | | |
| | 19 | 10194 | 2.4 | III | 91.81 | 5508 | 7200 | 9934 | 9000 | | | |
| | 17 | 11125 | 1.8 | II | 100.19 | 5605 | 7200 | 9909 | 9000 | | | |
| | 13 | 14882 | 1.6 | II | 134.03 | 6019 | 7200 | 9790 | 9000 | | | |
| | 11 | 17091 | 1.7 | II | 153.92 | 6100 | 7200 | 9702 | 9000 | **SK 5382 - 100L/4** | 282 | 346 |
| | 10 | 19017 | 1.3 | I | 171.27 | 6188 | 7200 | 9614 | 9000 | SK 5382 - 100LH/4 | | |
| | 8.4 | 22493 | 1.3 | I | 202.57 | 6271 | 7200 | 9430 | 9000 | | | |
| | 6.9 | 27615 | 1.0 | I | 248.70 | 5753 | 7200 | 9095 | 9000 | | | |
| | 6.3 | 29979 | 0.8 | * | 269.99 | 5459 | 7200 | 8910 | 9000 | | | |
| | 5.1 | 36807 | 0.8 | * | 331.48 | 4327 | 7200 | 8267 | 9000 | | | |
| | 23 | 8348 | 3.8 | III | 75.18 | 7938 | 10463 | 13205 | 13500 | **SK 6382 - 100L/4** | 419 | 350 |
| | 18 | 10285 | 3.4 | III | 92.63 | 8404 | 10463 | 13178 | 13500 | SK 6382 - 100LH/4 | | |
| | 15 | 12746 | 3.4 | III | 114.79 | 8901 | 10463 | 13136 | 13500 | | | |
| | 13 | 14087 | 2.9 | III | 126.87 | 9110 | 10463 | 13109 | 13500 | | | |
| | 11 | 17753 | 2.9 | III | 159.88 | 9160 | 10463 | 13019 | 13500 | | | |
| | 10 | 19025 | 2.6 | III | 171.34 | 9108 | 10463 | 12983 | 13500 | | | |
| | 8 | 23577 | 1.8 | II | 212.33 | 8892 | 10463 | 12832 | 13500 | | | |
| | 7.6 | 25071 | 1.4 | II | 225.79 | 8811 | 10463 | 12776 | 13500 | | | |
| | 6.8 | 27955 | 1.4 | II | 251.76 | 8636 | 10463 | 12654 | 13500 | | | |
| | 6.4 | 29713 | 1.8 | II | 267.59 | 8516 | 10463 | 12573 | 13500 | | | |
| | 5.4 | 35230 | 1.4 | II | 317.28 | 8084 | 10463 | 12285 | 13500 | | | |
| | 4.3 | 43659 | 1.2 | I | 393.19 | 7214 | 10463 | 11729 | 13500 | | | |
| | 8.3 | 22762 | 2.9 | III | 204.99 | 11338 | 13050 | 18380 | 18000 | **SK 7382 - 100L/4** | 580 | 354 |
| | 7.9 | 24032 | 3.1 | III | 216.43 | 11437 | 13050 | 18360 | 18000 | SK 7382 - 100LH/4 | | |
| | 6.2 | 30377 | 2.2 | III | 273.57 | 12121 | 13050 | 18232 | 18000 | | | |
| | 5 | 37618 | 1.8 | II | 338.79 | 12557 | 13050 | 18047 | 18000 | | | |
| | 4.5 | 41779 | 1.5 | II | 376.26 | 12377 | 13050 | 17921 | 18000 | **SK 7382/22 - 100L/4** | 622 | 374 |
| | 3.9 | 48357 | 1.3 | I | 435.50 | 12049 | 13050 | 17696 | 18000 | SK 7382/22 - 100LH/4 | | |
| | 3 | 63288 | 1.0 | I | 569.97 | 11068 | 13050 | 17044 | 18000 | | | |
| | 2.4 | 79315 | 0.8 | * | 714.31 | 9563 | 13050 | 16108 | 18000 | | | |
| | 5.4 | 35344 | 3.3 | III | 318.31 | 15570 | 16425 | 22500 | 23625 | **SK 8382 - 100L/4** | 856 | 358 |
| | 4.4 | 42936 | 2.6 | III | 386.68 | 16389 | 16425 | 22500 | 23625 | SK 8382 - 100LH/4 | | |

(AGMA Class I = $f_B$ 1.0 - 1.39 II = $f_B$ 1.4 - 1.99 III = $f_B$ ≥ 2.0 * = $f_B$ < 1.0) **(Model Type in blue is an Energy Efficient motor)**


Send Quote Requests to info@automatedpt.com
Call +1(800)985-6929 To Order or Order Online At Nordgearmotors.com

DRIVESYSTEMS



# 3.0 hp, 5.0 hp Gearmotors



| Motor Power $P_n$ [hp] | Output Speed $n_2$ [rpm] | Output Torque $T_2$ [lb-in] | Service Factor $f_B$ | AGMA Class | Gear Ratio $i_{tot}$ | Standard Bearings $F_{RN}$ OHL [lb] | Standard Bearings $F_{AN}$ Thrust [lb] | Heavy Duty Bearings (VL) $F_{RVL}$ OHL [lb] | Heavy Duty Bearings (VL) $F_{AVL}$ Thrust [lb] | Model Type | Weight [lb] | Dim. Page |
|---|---|---|---|---|---|---|---|---|---|---|---|---|
| **3.0** | 3.6 | 52023 | 2.1 | III | 468.52 | 16979 | 16425 | 22500 | 22500 | **SK 8382/42 - 100L/4** | 955 | 375 |
| | 3.1 | 61184 | 1.8 | II | 551.02 | 17582 | 16425 | 22500 | 22500 | SK 8382/42 - 100LH/4 | | |
| | 2.8 | 68059 | 1.6 | II | 612.94 | 17942 | 16425 | 22500 | 22500 | **SK 8382/32 - 100L/4** | 922 | 374 |
| | 2.4 | 79773 | 1.3 | I | 718.43 | 18356 | 16425 | 22500 | 22500 | SK 8382/32 - 100LH/4 | | |
| | 1.9 | 98958 | 1.1 | I | 891.21 | 18806 | 16425 | 22500 | 22500 | | | |
| | 1.6 | 118245 | 0.9 | * | 1064.91 | 17739 | 16425 | 22500 | 22500 | | | |
| | 2.8 | 68655 | 3.1 | III | 618.3 | 20666 | 22950 | 27000 | 29250 | **SK 9382/42 - 100L/4** | 1621 | 375 |
| | 2.4 | 79434 | 2.7 | III | 715.38 | 21413 | 22950 | 27000 | 29250 | SK 9382/42 - 100LH/4 | | |
| | 1.9 | 98434 | 2.2 | III | 886.49 | 22212 | 22950 | 27000 | 29250 | | | |
| | 1.4 | 130892 | 1.6 | II | 1178.81 | 23612 | 22950 | 27000 | 29250 | | | |
| | 1.2 | 157585 | 1.3 | I | 1419.2 | 24302 | 22950 | 27000 | 29250 | | | |
| | 0.98 | 194029 | 1.1 | I | 1747.42 | 24863 | 22950 | 27000 | 29250 | | | |
| | 1.5 | 129413 | 2.4 | III | 1165.49 | | | 29801 | 33750 | **SK 10382/52 - 100L/4** | 2928 | 375 |
| | 1.2 | 157534 | 2.0 | III | 1418.74 | | | 29230 | 33750 | SK 10382/52 - 100LH/4 | | |
| **5.0** | 360 | 875 | 1.3 | I | 4.79 | 441 | 821 | 1487 | 1609 | **SK 1282 - 100LA/4** | 77 | 330 |
| | 315 | 1000 | 1.5 | II | 5.47 | 446 | 848 | 1537 | 1609 | SK 1282 - 112MH/4 | | |
| | 268 | 1175 | 1.4 | II | 6.43 | 450 | 878 | 1595 | 1609 | | | |
| | 238 | 1323 | 1.3 | I | 7.24 | 450 | 900 | 1638 | 1609 | | | |
| | 210 | 1500 | 0.9 | * | 8.21 | 475 | 952 | 1701 | 1609 | | | |
| | 209 | 1506 | 1.1 | I | 8.24 | 450 | 920 | 1683 | 1609 | | | |
| | 188 | 1678 | 1.0 | I | 9.18 | 464 | 959 | 1737 | 1609 | | | |
| | 167 | 1890 | 0.9 | * | 10.34 | 459 | 972 | 1780 | 1609 | | | |
| | 147 | 2149 | 0.8 | * | 11.76 | 446 | 988 | 1825 | 1609 | | | |
| | 382 | 824 | 2.0 | III | 4.51 | 950 | 1728 | 1969 | 3375 | **SK 2282 - 100LA/4** | 101 | 332 |
| | 302 | 1045 | 1.8 | II | 5.72 | 1006 | 1881 | 2099 | 3375 | SK 2282 - 112MH/4 | | |
| | 268 | 1175 | 1.7 | II | 6.43 | 1035 | 1958 | 2162 | 3375 | | | |
| | 231 | 1367 | 1.6 | II | 7.48 | 1069 | 2061 | 2246 | 3375 | | | |
| | 206 | 1530 | 1.5 | II | 8.37 | 1096 | 2140 | 2311 | 3375 | | | |
| | 191 | 1650 | 1.8 | II | 9.03 | 1132 | 2225 | 2372 | 3375 | | | |
| | 170 | 1855 | 1.7 | II | 10.15 | 1159 | 2306 | 2437 | 3375 | | | |
| | 146 | 2158 | 1.6 | II | 11.81 | 1193 | 2417 | 2536 | 3375 | | | |
| | 130 | 2418 | 1.5 | II | 13.23 | 1215 | 2500 | 2601 | 3375 | | | |
| | 104 | 3021 | 1.4 | II | 16.53 | 1276 | 2700 | 2750 | 3375 | | | |
| | 93 | 3383 | 1.3 | I | 18.51 | 1289 | 2700 | 2815 | 3375 | | | |
| | 79 | 4002 | 1.1 | I | 21.90 | 1316 | 2700 | 2918 | 3375 | | | |
| | 72 | 4379 | 0.9 | * | 23.96 | 1337 | 2700 | 2900 | 3375 | | | |
| | 69 | 4563 | 1.0 | I | 24.97 | 1325 | 2700 | 2876 | 3375 | | | |
| | 64 | 4903 | 0.8 | * | 26.83 | 1339 | 2700 | 2831 | 3375 | | | |
| | 58 | 5419 | 0.8 | * | 29.65 | 1330 | 2700 | 2750 | 3375 | | | |
| | 385 | 819 | 2.3 | III | 4.48 | 1071 | 1784 | 2264 | 3490 | **SK 3282 - 100LA/4** | 135 | 336 |
| | 301 | 1046 | 2.2 | III | 5.74 | 1139 | 1956 | 2423 | 3724 | SK 3282 - 112MH/4 | | |
| | 257 | 1224 | 2.1 | III | 6.70 | 1186 | 2072 | 2527 | 3872 | | | |
| | 208 | 1519 | 1.9 | II | 8.31 | 1251 | 2241 | 2675 | 4091 | | | |
| | 176 | 1791 | 2.1 | III | 9.80 | 1314 | 2385 | 2799 | 4277 | | | |
| | 152 | 2080 | 2.1 | III | 11.38 | 1364 | 2520 | 2912 | 4446 | | | |
| | 122 | 2579 | 1.9 | II | 14.11 | 1424 | 2716 | 3074 | 4500 | | | |
| | 103 | 3047 | 1.9 | II | 16.67 | 1478 | 2864 | 3206 | 4500 | | | |

(AGMA Class I = $f_B$ 1.0 - 1.39 II = $f_B$ 1.4 - 1.99 III = $f_B$ ≥ 2.0 * = $f_B$ < 1.0) **(Model Type in blue is an Energy Efficient motor)**


Send Quote Requests to info@automatedpt.com
Call +1(800)985-6929 To Order or Order Online At Nordgearmotors.com

# 5.0 hp Gearmotors



DRIVESYSTEMS



| Motor Power $P_n$ [hp] | Output Speed $n_2$ [rpm] | Output Torque $T_2$ [lb-in] | Service Factor $f_B$ | AGMA Class | Gear Ratio $i_{tot}$ | Standard Bearings $F_{RN}$ OHL [lb] | Standard Bearings $F_{AN}$ Thrust [lb] | Heavy Duty Bearings (VL) $F_{RVL}$ OHL [lb] | Heavy Duty Bearings (VL) $F_{AVL}$ Thrust [lb] | Model Type | Weight [lb] | Dim. Page |
|---|---|---|---|---|---|---|---|---|---|---|---|---|
| 5.0 | 85 | 3688 | 1.9 | II | 20.18 | 1537 | 3044 | 3359 | 4500 | **SK 3282 - 100LA/4**<br>SK 3282 - 112MH/4 | 135 | 336 |
| | 81 | 3907 | 1.6 | II | 21.38 | 1541 | 3083 | 3398 | 4500 | | | |
| | 77 | 4103 | 1.7 | II | 22.45 | 1566 | 3148 | 3447 | 4500 | | | |
| | 73 | 4333 | 1.5 | II | 23.71 | 1566 | 3173 | 3474 | 4500 | | | |
| | 67 | 4730 | 1.6 | II | 25.88 | 1589 | 3263 | 3553 | 4500 | | | |
| | 60 | 5245 | 1.5 | II | 28.70 | 1604 | 3263 | 3632 | 4500 | | | |
| | 54 | 5835 | 1.3 | I | 31.93 | 1627 | 3263 | 3713 | 4500 | | | |
| | 46 | 6903 | 1.1 | I | 37.77 | 1634 | 3263 | 3830 | 4500 | | | |
| | 41 | 7679 | 1.1 | I | 42.02 | 1640 | 3263 | 3906 | 4500 | | | |
| | 285 | 1107 | 2.5 | III | 6.06 | 1726 | 2957 | 3542 | 5987 | **SK 4282 - 100LA/4**<br>SK 4282 - 112MH/4 | 168 | 340 |
| | 242 | 1303 | 2.4 | III | 7.13 | 1807 | 3155 | 3708 | 6264 | | | |
| | 207 | 1522 | 2.3 | III | 8.33 | 1888 | 3353 | 3879 | 6530 | | | |
| | 187 | 1687 | 2.5 | III | 9.23 | 1955 | 3506 | 3998 | 6743 | | | |
| | 159 | 1983 | 2.4 | III | 10.85 | 2045 | 3733 | 4172 | 6750 | | | |
| | 136 | 2317 | 2.3 | III | 12.68 | 2133 | 3960 | 4354 | 6750 | | | |
| | 113 | 2778 | 2.3 | III | 15.20 | 2246 | 4250 | 4581 | 6750 | | | |
| | 95 | 3322 | 2.3 | III | 18.18 | 2358 | 4538 | 4808 | 6750 | | | |
| | 80 | 3920 | 2.3 | III | 21.45 | 2459 | 4831 | 5031 | 6750 | | | |
| | 77 | 4092 | 2.1 | III | 22.39 | 2473 | 4901 | 5076 | 6750 | | | |
| | 66 | 4797 | 2.3 | III | 26.25 | 2588 | 4950 | 5299 | 6750 | | | |
| | 65 | 4830 | 2.1 | III | 26.43 | 2588 | 4950 | 5306 | 6750 | | | |
| | 53 | 5910 | 2.1 | III | 32.34 | 2702 | 4950 | 5589 | 6750 | | | |
| | 47 | 6652 | 1.8 | II | 36.40 | 2711 | 4950 | 5697 | 6750 | | | |
| | 47 | 6727 | 1.7 | II | 36.81 | 2768 | 4950 | 5751 | 6750 | | | |
| | 42 | 7445 | 1.8 | II | 40.74 | 2833 | 4950 | 5900 | 6750 | | | |
| | 40 | 7977 | 1.8 | II | 43.65 | 2815 | 4950 | 5958 | 6750 | | | |
| | 38 | 8233 | 1.7 | II | 45.05 | 2876 | 4950 | 6055 | 6750 | | | |
| | 33 | 9540 | 1.7 | II | 52.20 | 2905 | 4950 | 6210 | 6750 | | | |
| | 28 | 11258 | 1.4 | II | 61.60 | 2977 | 4950 | 6451 | 6750 | | | |
| | 23 | 13778 | 1.0 | I | 75.39 | 3042 | 4950 | 6464 | 6750 | | | |
| | 22 | 14017 | 1.0 | I | 76.70 | 2986 | 4950 | 6446 | 6750 | | | |
| | 19 | 16543 | 0.9 | * | 90.52 | 3038 | 4950 | 6251 | 6750 | | | |
| | 57 | 5574 | 2.2 | III | 30.50 | 3902 | 7200 | 7805 | 9000 | **SK 5282 - 100LA/4**<br>SK 5282 - 112MH/4 | 247 | 344 |
| | 52 | 6109 | 2.4 | III | 33.43 | 4005 | 7200 | 8015 | 9000 | | | |
| | 42 | 7456 | 2.2 | III | 40.80 | 4210 | 7200 | 8444 | 9000 | | | |
| | 36 | 8639 | 2.5 | III | 47.27 | 4307 | 7200 | 8741 | 9000 | | | |
| | 31 | 10152 | 1.9 | II | 55.55 | 4532 | 7200 | 9140 | 9000 | | | |
| | 31 | 10216 | 2.3 | III | 55.90 | 4487 | 7200 | 9108 | 9000 | | | |
| | 25 | 12542 | 2.1 | III | 68.63 | 4712 | 7200 | 9603 | 9000 | | | |
| | 21 | 14915 | 1.1 | I | 81.61 | 4831 | 7200 | 9788 | 9000 | | | |
| | 19 | 16779 | 1.5 | II | 91.81 | 4991 | 7200 | 9716 | 9000 | | | |
| | 17 | 18310 | 1.1 | I | 100.19 | 5036 | 7200 | 9648 | 9000 | | | |
| | 13 | 24494 | 1.0 | I | 134.03 | 5227 | 7200 | 9308 | 9000 | | | |
| | 21 | 15117 | 1.6 | II | 82.72 | 4885 | 7200 | 9781 | 9000 | **SK 5382 - 100LA/4**<br>SK 5382 - 112MH/4 | 289 | 346 |
| | 19 | 16760 | 1.5 | II | 91.71 | 4966 | 7200 | 9716 | 9000 | | | |
| | 15 | 21450 | 1.1 | I | 117.37 | 5040 | 7200 | 9488 | 9000 | | | |
| | 12 | 25370 | 1.1 | I | 138.82 | 5150 | 7200 | 9252 | 9000 | | | |
| | 11 | 28129 | 1.0 | I | 153.92 | 5195 | 7200 | 9056 | 9000 | | | |
| | 10 | 31300 | 0.8 | * | 171.27 | 5126 | 7200 | 8800 | 9000 | | | |
| | 8.5 | 37020 | 0.8 | * | 202.57 | 4282 | 7200 | 8242 | 9000 | | | |
| | 26 | 11959 | 2.5 | III | 65.44 | 7254 | 10463 | 13149 | 13500 | **SK 6282 - 100LA/4**<br>SK 6282 - 112MH/4 | 432 | 348 |
| | 21 | 14681 | 2.5 | III | 80.33 | 7646 | 10463 | 13095 | 13500 | | | |

(AGMA Class I = $f_B$ 1.0 - 1.39 II = $f_B$ 1.4 - 1.99 III = $f_B$ ≥ 2.0 * = $f_B$ < 1.0) **(Model Type in blue is an Energy Efficient motor)**


Send Quote Requests to info@automatedpt.com
Call +1(800)985-6929 To Order or Order Online At Nordgearmotors.com

DRIVESYSTEMS



# 5.0 hp Gearmotors



| Motor Power $P_n$ [hp] | Output Speed $n_2$ [rpm] | Output Torque $T_2$ [lb-in] | Service Factor $f_B$ | AGMA Class | Gear Ratio $i_{tot}$ | Standard Bearings $F_{RN}$ OHL [lb] | Standard Bearings $F_{AN}$ Thrust [lb] | Heavy Duty Bearings (VL) $F_{RVL}$ OHL [lb] | Heavy Duty Bearings (VL) $F_{AVL}$ Thrust [lb] | Model Type | Weight [lb] | Dim. Page |
|---|---|---|---|---|---|---|---|---|---|---|---|---|
| **5.0** | 34 | 9333 | 2.4 | III | 51.07 | 6770 | 10463 | 13192 | 13500 | **SK 6382 - 100LA/4** | 426 | 350 |
| | 29 | 10903 | 2.3 | III | 59.66 | 7056 | 10463 | 13167 | 13500 | SK 6382 - 112MH/4 | | |
| | 23 | 13432 | 2.1 | III | 73.50 | 7423 | 10463 | 13122 | 13500 | | | |
| | 23 | 13739 | 2.3 | III | 75.18 | 7486 | 10463 | 13115 | 13500 | | | |
| | 19 | 16928 | 2.1 | III | 92.63 | 7855 | 10463 | 13041 | 13500 | | | |
| | 15 | 20978 | 2.1 | III | 114.79 | 8235 | 10463 | 12922 | 13500 | | | |
| | 14 | 23186 | 1.7 | II | 126.87 | 8332 | 10463 | 12845 | 13500 | | | |
| | 11 | 29219 | 1.7 | II | 159.88 | 8550 | 10463 | 12598 | 13500 | | | |
| | 10 | 31313 | 1.6 | II | 171.34 | 8402 | 10463 | 12497 | 13500 | | | |
| | 8.1 | 38804 | 1.1 | I | 212.33 | 7749 | 10463 | 12067 | 13500 | | | |
| | 7.6 | 41264 | 0.9 | * | 225.79 | 7490 | 10463 | 11903 | 13500 | | | |
| | 6.9 | 46010 | 0.9 | * | 251.76 | 6914 | 10463 | 11549 | 13500 | | | |
| | 6.4 | 48903 | 1.1 | I | 267.59 | 6505 | 10463 | 11309 | 13500 | | | |
| | 5.4 | 57984 | 0.9 | * | 317.28 | 4781 | 10463 | 10413 | 13500 | | | |
| | 14 | 22546 | 2.4 | III | 123.37 | 9326 | 13050 | 18385 | 18000 | **SK 7382 - 100LA/4** | 587 | 354 |
| | 11 | 27517 | 2.2 | III | 150.57 | 9720 | 13050 | 18293 | 18000 | SK 7382 - 112MH/4 | | |
| | 11 | 29637 | 1.9 | II | 162.17 | 9797 | 13050 | 18248 | 18000 | | | |
| | 8.4 | 37463 | 1.8 | II | 204.99 | 10283 | 13050 | 18052 | 18000 | | | |
| | 8 | 39553 | 1.9 | II | 216.43 | 10294 | 13050 | 17991 | 18000 | | | |
| | 6.3 | 49996 | 1.3 | I | 273.57 | 10706 | 13050 | 17633 | 18000 | | | |
| | 5.1 | 61915 | 1.1 | I | 338.79 | 10908 | 13050 | 17111 | 18000 | | | |
| | 8.6 | 36734 | 2.6 | III | 201.00 | 12913 | 16425 | 22500 | 23625 | **SK 8382 - 100LA/4** | 862 | 358 |
| | 5.4 | 58172 | 2.0 | III | 318.31 | 14105 | 16425 | 22500 | 23625 | SK 8382 - 112MH/4 | | |
| | 4.5 | 70667 | 1.6 | II | 386.68 | 14623 | 16425 | 22500 | 23625 | | | |
| | 3.7 | 85624 | 1.3 | I | 468.52 | 14798 | 16425 | 22500 | 22500 | **SK 8382/42 - 100LA/4** | 961 | 375 |
| | 3.1 | 100701 | 1.1 | I | 551.02 | 14981 | 16425 | 22500 | 22500 | SK 8382/42 - 112MH/4 | | |
| | 2.8 | 112017 | 1.0 | I | 612.94 | 15012 | 16425 | 22500 | 22500 | **SK 8382/32 - 100LA/4** | 928 | 374 |
| | 2.4 | 131296 | 0.8 | * | 718.43 | 14954 | 16425 | 22500 | 22500 | SK 8382/32 - 112MH/4 | | |
| | 5.9 | 53828 | 2.9 | III | 294.54 | 15971 | 22950 | 27000 | 29250 | **SK 9382/52 - 100LA/4** | 1691 | 375 |
| | 4.2 | 75227 | 2.8 | III | 411.63 | 17334 | 22950 | 27000 | 29250 | SK 9382/52 - 112MH/4 | | |
| | 3.8 | 82161 | 2.5 | III | 449.57 | 17645 | 22950 | 27000 | 29250 | **SK 9382/42 - 100LA/4** | 1627 | 375 |
| | 2.8 | 112997 | 1.9 | II | 618.30 | 18603 | 22950 | 27000 | 29250 | SK 9382/42 - 112MH/4 | | |
| | 2.4 | 130738 | 1.6 | II | 715.38 | 18990 | 22950 | 27000 | 29250 | | | |
| | 1.9 | 162009 | 1.3 | I | 886.49 | 19175 | 22950 | 27000 | 29250 | | | |
| | 1.5 | 215432 | 1.0 | I | 1178.81 | 19589 | 22950 | 27000 | 29250 | | | |
| | 1.2 | 259364 | 0.8 | * | 1419.2 | 19503 | 22950 | 27000 | 29250 | | | |
| | 2.5 | 126531 | 2.4 | III | 692.36 | | | 29853 | 33750 | **SK 10382/52 - 100LA/4** | 2935 | 375 |
| | 1.9 | 167432 | 1.9 | II | 916.16 | | | 29000 | 33750 | SK 10382/52 - 112MH/4 | | |
| | 1.5 | 212998 | 1.5 | II | 1165.49 | | | 27727 | 33750 | | | |
| | 1.2 | 259280 | 1.2 | I | 1418.74 | | | 26030 | 33750 | | | |
| | 1.8 | 175988 | 2.7 | III | 962.98 | | | 32177 | 38250 | **SK 11382/52 - 100LA/4** | 4783 | 375 |
| | 1.5 | 210962 | 2.5 | III | 1154.35 | | | 31329 | 38250 | SK 11382/52 - 112MH/4 | | |
| | 1.2 | 252770 | 2.1 | III | 1383.12 | | | 30071 | 38250 | | | |

(AGMA Class I = $f_B$ 1.0 - 1.39 II = $f_B$ 1.4 - 1.99 III = $f_B$ ≥ 2.0 * = $f_B$ < 1.0) **(Model Type in blue is an Energy Efficient motor)**


Send Quote Requests to info@automatedpt.com
Call +1(800)985-6929 To Order or Order Online At Nordgearmotors.com

# 7.5 hp Gearmotors



DRIVESYSTEMS

GEARMOTORS

| Motor Power $P_n$ [hp] | Output Speed $n_2$ [rpm] | Output Torque $T_2$ [lb-in] | Service Factor $f_B$ | AGMA Class | Gear Ratio $i_{tot}$ | Standard Bearings $F_{RN}$ OHL [lb] | Standard Bearings $F_{AN}$ Thrust [lb] | Heavy Duty Bearings (VL) $F_{RVL}$ OHL [lb] | Heavy Duty Bearings (VL) $F_{AVL}$ Thrust [lb] | Model Type | Weight [lb] | Dim. Page |
|---|---|---|---|---|---|---|---|---|---|---|---|---|
| 7.5 | 387 | 1221 | 3.3 | III | 4.48 | 1017 | 1703 | 2219 | 3402 | **SK 3282 - 132S/4** | 185 | 336 |
| | 302 | 1565 | 3.1 | III | 5.74 | 1080 | 1856 | 2366 | 3610 | **SK 3282 - 132SH/4** | | |
| | 259 | 1824 | 2.9 | III | 6.70 | 1114 | 1953 | 2459 | 3744 | | | |
| | 209 | 2263 | 2.6 | III | 8.31 | 1159 | 2088 | 2597 | 3935 | | | |
| | 177 | 2669 | 2.8 | III | 9.80 | 1208 | 2219 | 2709 | 4104 | | | |
| | 152 | 3099 | 2.3 | III | 11.38 | 1244 | 2333 | 2810 | 4237 | | | |
| | 123 | 3842 | 2.0 | III | 14.11 | 1278 | 2464 | 2948 | 4417 | | | |
| | 104 | 4539 | 1.6 | II | 16.67 | 1307 | 2585 | 3060 | 4500 | | | |
| | 86 | 5495 | 1.3 | I | 20.18 | 1330 | 2716 | 3186 | 4500 | | | |
| | 81 | 5822 | 1.1 | I | 21.38 | 1319 | 2720 | 3204 | 4500 | | | |
| | 77 | 6113 | 1.2 | I | 22.45 | 1337 | 2779 | 3254 | 4500 | | | |
| | 73 | 6456 | 1.0 | I | 23.71 | 1310 | 2774 | 3260 | 4500 | | | |
| | 67 | 7047 | 1.1 | I | 25.88 | 1319 | 2833 | 3335 | 4500 | | | |
| | 60 | 7815 | 1.0 | I | 28.70 | 1305 | 2887 | 3380 | 4500 | | | |
| | 54 | 8695 | 0.9 | * | 31.93 | 1289 | 2921 | 3445 | 4500 | | | |
| | 114 | 4139 | 3.2 | III | 15.20 | 2115 | 4043 | 4464 | 6750 | **SK 4282 - 132S/4** | 218 | 340 |
| | 95 | 4951 | 3.2 | III | 18.18 | 2198 | 4298 | 4673 | 6750 | **SK 4282 - 132SH/4** | | |
| | 81 | 5841 | 2.6 | III | 21.45 | 2282 | 4532 | 4871 | 6750 | | | |
| | 77 | 6097 | 2.5 | III | 22.39 | 2284 | 4568 | 4905 | 6750 | | | |
| | 66 | 7148 | 2.0 | III | 26.25 | 2369 | 4856 | 5121 | 6750 | | | |
| | 66 | 7197 | 2.2 | III | 26.43 | 2365 | 4824 | 5121 | 6750 | | | |
| | 65 | 7276 | 1.9 | II | 26.72 | 2313 | 4770 | 5078 | 6750 | | | |
| | 54 | 8725 | 1.8 | II | 32.04 | 2385 | 4950 | 5301 | 6750 | | | |
| | 54 | 8806 | 1.6 | II | 32.34 | 2444 | 4950 | 5351 | 6750 | | | |
| | 48 | 9912 | 1.2 | I | 36.40 | 2381 | 4950 | 5405 | 6750 | | | |
| | 47 | 10024 | 1.2 | I | 36.81 | 2450 | 4950 | 5488 | 6750 | | | |
| | 45 | 10432 | 1.7 | II | 38.31 | 2435 | 4950 | 5506 | 6750 | | | |
| | 43 | 11094 | 1.2 | I | 40.74 | 2482 | 4950 | 5609 | 6750 | | | |
| | 40 | 11886 | 1.2 | I | 43.65 | 2428 | 4950 | 5627 | 6750 | | | |
| | 39 | 12267 | 1.1 | I | 45.05 | 2504 | 4950 | 5715 | 6750 | | | |
| | 33 | 14214 | 1.1 | I | 52.20 | 2428 | 4950 | 5814 | 6750 | | | |
| | 28 | 16774 | 0.9 | * | 61.60 | 2435 | 4950 | 5994 | 6750 | | | |
| | 57 | 8305 | 3.1 | III | 30.50 | 3692 | 7200 | 7621 | 9000 | **SK 5282 - 132S/4** | 298 | 344 |
| | 52 | 9103 | 2.2 | III | 33.43 | 3773 | 7200 | 7805 | 9000 | **SK 5282 - 132SH/4** | | |
| | 49 | 9656 | 2.5 | III | 35.46 | 3758 | 7200 | 7884 | 9000 | | | |
| | 43 | 11110 | 2.0 | III | 40.80 | 3926 | 7200 | 8188 | 9000 | | | |
| | 41 | 11421 | 2.5 | III | 41.94 | 3902 | 7200 | 8208 | 9000 | | | |
| | 37 | 12872 | 1.7 | II | 47.27 | 3956 | 7200 | 8411 | 9000 | | | |
| | 34 | 14021 | 2.0 | III | 51.49 | 4077 | 7200 | 8638 | 9000 | | | |
| | 31 | 15127 | 1.3 | I | 55.55 | 4136 | 7200 | 8798 | 9000 | | | |
| | 31 | 15222 | 1.5 | II | 55.90 | 4086 | 7200 | 8753 | 9000 | | | |
| | 25 | 18688 | 1.4 | II | 68.63 | 4232 | 7200 | 9191 | 9000 | | | |
| | 19 | 25001 | 1.0 | I | 91.81 | 4325 | 7200 | 9275 | 9000 | | | |
| | 44 | 10751 | 2.6 | III | 39.48 | 6032 | 10463 | 12058 | 13500 | **SK 6282 - 132S/4** | 483 | 348 |
| | 35 | 13547 | 2.6 | III | 49.75 | 6392 | 10463 | 12807 | 13500 | **SK 6282 - 132SH/4** | | |
| | 28 | 16633 | 2.4 | III | 61.08 | 6721 | 10463 | 13048 | 13500 | | | |
| | 27 | 17820 | 1.7 | II | 65.44 | 6764 | 10463 | 13016 | 13500 | | | |
| | 22 | 21874 | 1.7 | II | 80.33 | 7083 | 10463 | 12893 | 13500 | | | |

(AGMA Class I = $f_B$ 1.0 - 1.39 II = $f_B$ 1.4 - 1.99 III = $f_B$ ≥ 2.0 * = $f_B$ < 1.0) **(Model Type in blue is an Energy Efficient motor)**


Send Quote Requests to info@automatedpt.com
Call +1(800)985-6929 To Order or Order Online At Nordgearmotors.com

DRIVESYSTEMS



# 7.5 hp Gearmotors



| Motor Power $P_n$ [hp] | Output Speed $n_2$ [rpm] | Output Torque $T_2$ [lb-in] | Service Factor $f_B$ | AGMA Class | Gear Ratio $i_{tot}$ | Standard Bearings $F_{RN}$ OHL [lb] | Standard Bearings $F_{AN}$ Thrust [lb] | Heavy Duty Bearings (VL) $F_{RVL}$ OHL [lb] | Heavy Duty Bearings (VL) $F_{AVL}$ Thrust [lb] | Model Type | Weight [lb] | Dim. Page |
|---|---|---|---|---|---|---|---|---|---|---|---|---|
| 7.5 | 29 | 16246 | 3.0 | III | 59.66 | 6613 | 10463 | 13057 | 13500 | **SK 6382 - 132S/4** | 476 | 350 |
| | 24 | 20015 | 2.5 | III | 73.50 | 6892 | 10463 | 12951 | 13500 | SK 6382 - 132SH/4 | | |
| | 23 | 20472 | 2.6 | III | 75.18 | 6955 | 10463 | 12938 | 13500 | | | |
| | 19 | 25224 | 2.1 | III | 92.63 | 7191 | 10463 | 12769 | 13500 | | | |
| | 15 | 31258 | 1.7 | II | 114.79 | 7380 | 10463 | 12499 | 13500 | | | |
| | 14 | 34548 | 1.2 | I | 126.87 | 7385 | 10463 | 12323 | 13500 | | | |
| | 11 | 43536 | 1.2 | I | 159.88 | 7227 | 10463 | 11738 | 13500 | | | |
| | 10 | 46657 | 1.1 | I | 171.34 | 6827 | 10463 | 11498 | 13500 | | | |
| | 30 | 15497 | 3.2 | III | 56.91 | 7317 | 13050 | 15899 | 18000 | **SK 7282 - 132S/4** | 622 | 352 |
| | 25 | 18988 | 2.7 | III | 69.73 | 7691 | 13050 | 16830 | 18000 | SK 7282 - 132SH/4 | | |
| | 14 | 33595 | 2.0 | III | 123.37 | 8514 | 13050 | 18153 | 18000 | **SK 7382 - 132S/4** | 637 | 354 |
| | 12 | 41001 | 1.6 | II | 150.57 | 8750 | 13050 | 17946 | 18000 | SK 7382 - 132SH/4 | | |
| | 11 | 44160 | 1.3 | I | 162.17 | 8730 | 13050 | 17845 | 18000 | | | |
| | 8.5 | 55820 | 1.2 | I | 204.99 | 8962 | 13050 | 17395 | 18000 | | | |
| | 8 | 58935 | 1.2 | I | 216.43 | 8870 | 13050 | 17255 | 18000 | | | |
| | 6.3 | 74495 | 0.9 | * | 273.57 | 8921 | 13050 | 16416 | 18000 | | | |
| | 29 | 16186 | 3.5 | III | 59.44 | 9092 | 15779 | | | **SK 8282 - 132S/4** | 904 | 356 |
| | 24 | 19663 | 3.5 | III | 72.21 | 9590 | 16425 | | | SK 8282 - 132SH/4 | | |
| | 15 | 32260 | 3.4 | III | 118.47 | 10706 | 16425 | 22275 | 23625 | **SK 8382 - 132S/4** | 913 | 358 |
| | 14 | 34142 | 3.2 | III | 125.38 | 10899 | 16425 | 22500 | 23625 | SK 8382 - 132SH/4 | | |
| | 12 | 39188 | 2.8 | III | 143.91 | 11192 | 16425 | 22500 | 23625 | | | |
| | 11 | 41617 | 2.8 | III | 152.83 | 11259 | 16425 | 22500 | 23625 | | | |
| | 9.3 | 50557 | 2.2 | III | 185.66 | 11745 | 16425 | 22500 | 23625 | | | |
| | 8.6 | 54734 | 1.7 | II | 201.00 | 11761 | 16425 | 22500 | 23625 | | | |
| | 7.2 | 65904 | 1.8 | II | 242.02 | 12020 | 16425 | 22500 | 23625 | | | |
| | 5.9 | 80061 | 1.4 | II | 294.01 | 12328 | 16425 | 22500 | 23625 | | | |
| | 5.5 | 86678 | 1.3 | I | 318.31 | 12260 | 16425 | 22500 | 23625 | | | |
| | 4.5 | 105296 | 1.1 | I | 386.68 | 12438 | 16425 | 22500 | 23625 | | | |
| | 9.9 | 47667 | 4.0 | III | 175.05 | 15998 | 22950 | 27000 | 29250 | **SK 9382 - 132S/4** | 1579 | 362 |
| | 8.5 | 55736 | 3.5 | III | 204.68 | 16614 | 22950 | 27000 | 29250 | SK 9382 - 132SH/4 | | |
| | 6 | 79309 | 2.7 | III | 291.25 | 17838 | 22950 | 27000 | 29250 | | | |
| | 4.9 | 95950 | 2.3 | III | 352.36 | 18619 | 22950 | 27000 | 29250 | | | |
| | 3.9 | 122421 | 1.7 | II | 449.57 | 15741 | 22950 | 27000 | 29250 | **SK 9382/42 - 132S/4** | 1678 | 375 |
| | 2.8 | 168367 | 1.3 | I | 618.30 | 16016 | 22950 | 27000 | 29250 | SK 9382/42 - 132SH/4 | | |
| | 2.4 | 194803 | 1.1 | I | 715.38 | 15982 | 22950 | 27000 | 29250 | | | |
| | 2 | 241398 | 0.9 | * | 886.49 | 15257 | 22950 | 27000 | 29250 | | | |
| | 3.6 | 129550 | 2.4 | III | 475.75 | | | 29799 | 33750 | **SK 10382/52 - 132S/4** | 2986 | 375 |
| | 3 | 157350 | 2.0 | III | 577.84 | | | 29234 | 33750 | SK 10382/52 - 132SH/4 | | |
| | 2.5 | 188535 | 1.6 | II | 692.36 | | | 28456 | 33750 | | | |
| | 1.9 | 249477 | 1.2 | I | 916.16 | | | 26426 | 33750 | | | |
| | 1.5 | 317371 | 1.0 | I | 1165.49 | | | 23191 | 33750 | | | |
| | 1.2 | 386333 | 0.8 | * | 1418.74 | | | 18315 | 33750 | | | |
| | 2.9 | 164111 | 3.2 | III | 602.67 | | | 32427 | 38250 | **SK 11382/52 - 132S/4** | 4833 | 375 |
| | 2.4 | 199353 | 2.7 | III | 732.09 | | | 31631 | 38250 | SK 11382/52 - 132SH/4 | | |
| | 1.8 | 262226 | 2.0 | III | 962.98 | | | 29747 | 38250 | | | |
| | 1.5 | 314338 | 1.7 | II | 1154.35 | | | 27662 | 38250 | | | |
| | 1.3 | 376633 | 1.4 | II | 1383.12 | | | 24365 | 38250 | | | |
| | 0.95 | 498382 | 1.1 | I | 1830.22 | | | 13012 | 38250 | | | |
| | 0.75 | 632651 | 0.8 | * | 2323.3 | | | | 38250 | | | |

(AGMA Class I = $f_B$ 1.0 - 1.39 II = $f_B$ 1.4 - 1.99 III = $f_B$ ≥ 2.0 * = $f_B$ < 1.0) **(Model Type in blue is an Energy Efficient motor)**


Send Quote Requests to info@automatedpt.com
Call +1(800)985-6929 To Order or Order Online At Nordgearmotors.com

# 10 hp Gearmotors



NORD DRIVESYSTEMS



| Motor Power $P_n$ [hp] | Output Speed $n_2$ [rpm] | Output Torque $T_2$ [lb-in] | Service Factor $f_B$ | AGMA Class | Gear Ratio $i_{tot}$ | Standard Bearings $F_{RN}$ OHL [lb] | Standard Bearings $F_{AN}$ Thrust [lb] | Heavy Duty Bearings (VL) $F_{RVL}$ OHL [lb] | Heavy Duty Bearings (VL) $F_{AVL}$ Thrust [lb] | Model Type | Weight [lb] | Dim. Page |
|---|---|---|---|---|---|---|---|---|---|---|---|---|
| 10 | 387 | 1627 | 2.5 | III | 4.48 | 970 | 1629 | 2178 | 3314 | **SK 3282 - 132M/4** | 209 | 336 |
| | 302 | 2087 | 2.3 | III | 5.74 | 1012 | 1760 | 2314 | 3501 | SK 3282 - 132MH/4 | | |
| | 259 | 2435 | 2.2 | III | 6.70 | 1040 | 1836 | 2394 | 3614 | | | |
| | 209 | 3020 | 2.0 | III | 8.31 | 1064 | 1942 | 2513 | 3769 | | | |
| | 177 | 3561 | 2.1 | III | 9.80 | 1103 | 2054 | 2624 | 3922 | | | |
| | 152 | 4136 | 1.8 | II | 11.38 | 1125 | 2140 | 2709 | 4037 | | | |
| | 123 | 5128 | 1.5 | II | 14.11 | 1127 | 2241 | 2822 | 4169 | | | |
| | 104 | 6058 | 1.2 | I | 16.67 | 1125 | 2311 | 2912 | 4277 | | | |
| | 86 | 7333 | 1.0 | I | 20.18 | 1118 | 2383 | 3011 | 4388 | | | |
| | 81 | 7770 | 0.8 | * | 21.38 | 1078 | 2367 | 3013 | 4381 | | | |
| | 77 | 8158 | 0.9 | * | 22.45 | 1094 | 2412 | 3056 | 4446 | | | |
| | 73 | 8616 | 0.8 | * | 23.71 | 1044 | 2383 | 3056 | 4403 | | | |
| | 67 | 9405 | 0.8 | * | 25.88 | 1035 | 2408 | 3098 | 4453 | | | |
| | 160 | 3943 | 2.6 | III | 10.85 | 1854 | 3434 | 4005 | 6689 | **SK 4282 - 132M/4** | 243 | 340 |
| | 137 | 4608 | 2.4 | III | 12.68 | 1910 | 3591 | 4160 | 6750 | SK 4282 - 132MH/4 | | |
| | 114 | 5524 | 2.4 | III | 15.20 | 1987 | 3816 | 4352 | 6750 | | | |
| | 95 | 6607 | 2.4 | III | 18.18 | 2043 | 4043 | 4545 | 6750 | | | |
| | 81 | 7795 | 1.9 | II | 21.45 | 2099 | 4250 | 4718 | 6750 | | | |
| | 77 | 8137 | 1.8 | II | 22.39 | 2093 | 4257 | 4748 | 6750 | | | |
| | 66 | 9539 | 1.5 | II | 26.25 | 2149 | 4480 | 4930 | 6750 | | | |
| | 66 | 9605 | 1.6 | II | 26.43 | 2140 | 4473 | 4919 | 6750 | | | |
| | 65 | 9710 | 1.5 | II | 26.72 | 2063 | 4381 | 4869 | 6750 | | | |
| | 54 | 11643 | 1.4 | II | 32.04 | 2093 | 4613 | 5072 | 6750 | | | |
| | 54 | 11752 | 1.2 | I | 32.34 | 2160 | 4709 | 5126 | 6750 | | | |
| | 47 | 13377 | 0.9 | * | 36.81 | 2124 | 4770 | 5218 | 6750 | | | |
| | 45 | 13922 | 1.3 | I | 38.31 | 2079 | 4754 | 5213 | 6750 | | | |
| | 43 | 14805 | 0.9 | * | 40.74 | 2133 | 4901 | 5321 | 6750 | | | |
| | 39 | 16371 | 0.9 | * | 45.05 | 2099 | 4950 | 5387 | 6750 | | | |
| | 274 | 2300 | 3.2 | III | 6.33 | 2354 | 3933 | 4910 | 8255 | **SK 5282 - 132M/4** | 322 | 344 |
| | 92 | 6861 | 2.9 | III | 18.88 | 3157 | 6026 | 6615 | 9000 | SK 5282 - 132MH/4 | | |
| | 85 | 7399 | 2.6 | III | 20.36 | 3191 | 6181 | 6725 | 9000 | | | |
| | 69 | 9085 | 2.6 | III | 25.00 | 3357 | 6656 | 7090 | 9000 | | | |
| | 57 | 11084 | 2.3 | III | 30.50 | 3476 | 7130 | 7439 | 9000 | | | |
| | 52 | 12148 | 1.7 | II | 33.43 | 3546 | 7061 | 7607 | 9000 | | | |
| | 49 | 12886 | 1.9 | II | 35.46 | 3494 | 7200 | 7652 | 9000 | | | |
| | 43 | 14827 | 1.5 | II | 40.80 | 3641 | 7200 | 7949 | 9000 | | | |
| | 41 | 15241 | 1.9 | II | 41.94 | 3593 | 7200 | 7949 | 9000 | | | |
| | 34 | 18712 | 1.5 | II | 51.49 | 3710 | 7200 | 8321 | 9000 | | | |
| | 31 | 20187 | 0.9 | * | 55.55 | 3733 | 7200 | 8474 | 9000 | | | |
| | 44 | 14347 | 2.0 | III | 39.48 | 5744 | 10463 | 11844 | 13500 | **SK 6282 - 132M/4** | 507 | 348 |
| | 35 | 18079 | 2.0 | III | 49.75 | 6039 | 10463 | 12517 | 13500 | SK 6282 - 132MH/4 | | |
| | 28 | 22197 | 1.8 | II | 61.08 | 6300 | 10463 | 12881 | 13500 | | | |
| | 71 | 8874 | 2.7 | III | 24.42 | 5159 | 8728 | 10460 | 13500 | **SK 6382 - 132M/4** | 501 | 350 |
| | 60 | 10437 | 2.6 | III | 28.72 | 5371 | 9277 | 10922 | 13500 | SK 6382 - 132MH/4 | | |
| | 56 | 11233 | 2.7 | III | 30.91 | 5454 | 9547 | 11122 | 13500 | | | |
| | 48 | 13206 | 2.6 | III | 36.34 | 5666 | 10148 | 11581 | 13500 | | | |
| | 41 | 15430 | 2.4 | III | 42.46 | 5825 | 10463 | 12031 | 13500 | | | |
| | 34 | 18559 | 2.4 | III | 51.07 | 6026 | 10463 | 12564 | 13500 | | | |
| | 29 | 21680 | 2.2 | III | 59.66 | 6176 | 10463 | 12899 | 13500 | | | |
| | 24 | 26710 | 1.8 | II | 73.50 | 6332 | 10463 | 12708 | 13500 | | | |
| | 23 | 27320 | 1.9 | II | 75.18 | 6397 | 10463 | 12681 | 13500 | | | |
| | 19 | 33662 | 1.6 | II | 92.63 | 6512 | 10463 | 12373 | 13500 | | | |
| | 15 | 41715 | 1.2 | I | 114.79 | 6534 | 10463 | 11871 | 13500 | | | |
| | 14 | 46105 | 0.9 | * | 126.87 | 6431 | 10463 | 11540 | 13500 | | | |
| | 11 | 58101 | 0.9 | * | 159.88 | 4754 | 10463 | 10400 | 13500 | | | |

(AGMA Class I = $f_B$ 1.0 - 1.39 II = $f_B$ 1.4 - 1.99 III = $f_B$ ≥ 2.0 * = $f_B$ < 1.0) **(Model Type in blue is an Energy Efficient motor)**


Send Quote Requests to info@automatedpt.com
Call +1(800)985-6929 To Order or Order Online At Nordgearmotors.com

DRIVESYSTEMS

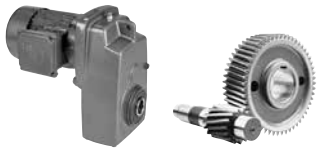

# 10 hp Gearmotors



| Motor Power $P_n$ [hp] | Output Speed $n_2$ [rpm] | Output Torque $T_2$ [lb-in] | Service Factor $f_B$ | AGMA Class | Gear Ratio $i_{tot}$ | Standard Bearings $F_{RN}$ OHL [lb] | Standard Bearings $F_{AN}$ Thrust [lb] | Heavy Duty Bearings (VL) $F_{RVL}$ OHL [lb] | Heavy Duty Bearings (VL) $F_{AVL}$ Thrust [lb] | Model Type | Weight [lb] | Dim. Page |
|---|---|---|---|---|---|---|---|---|---|---|---|---|
| 10 | 30 | 20681 | 2.4 | III | 56.91 | 6944 | 13050 | 15611 | 18000 | **SK 7282 - 132M/4** | 646 | 352 |
| | 25 | 25340 | 2.0 | III | 69.73 | 7270 | 13050 | 16441 | 18000 | SK 7282 - 132MH/4 | | |
| | 33 | 19398 | 2.7 | III | 53.38 | 6858 | 12697 | 15354 | 18000 | **SK 7382 - 132M/4** | 662 | 354 |
| | 29 | 21630 | 2.9 | III | 59.52 | 6966 | 13050 | 15748 | 18000 | SK 7382 - 132MH/4 | | |
| | 25 | 24748 | 2.6 | III | 68.10 | 7139 | 13050 | 16268 | 18000 | | | |
| | 22 | 28640 | 2.3 | III | 78.81 | 7310 | 13050 | 16805 | 18000 | | | |
| | 19 | 33862 | 2.0 | III | 93.18 | 7531 | 13050 | 17516 | 18000 | | | |
| | 16 | 38735 | 1.7 | II | 106.59 | 7637 | 13050 | 18014 | 18000 | | | |
| | 14 | 44833 | 1.5 | II | 123.37 | 7745 | 13050 | 17822 | 18000 | | | |
| | 12 | 54717 | 1.2 | I | 150.57 | 7781 | 13050 | 17442 | 18000 | | | |
| | 11 | 58933 | 0.9 | * | 162.17 | 7666 | 13050 | 17255 | 18000 | | | |
| | 8.5 | 74494 | 0.9 | * | 204.99 | 7612 | 13050 | 16416 | 18000 | | | |
| | 19 | 33048 | 3.1 | III | 90.94 | 9594 | 16425 | 20390 | 23625 | **SK 8382 - 132M/4** | 937 | 358 |
| | 17 | 37507 | 2.9 | III | 103.21 | 9810 | 16425 | 21053 | 23625 | SK 8382 - 132MH/4 | | |
| | 15 | 43052 | 2.6 | III | 118.47 | 10067 | 16425 | 21688 | 23625 | | | |
| | 14 | 45563 | 2.4 | III | 125.38 | 10204 | 16425 | 22082 | 23625 | | | |
| | 12 | 52297 | 2.1 | III | 143.91 | 10393 | 16425 | 22500 | 23625 | | | |
| | 11 | 55539 | 2.1 | III | 152.83 | 10368 | 16425 | 22500 | 23625 | | | |
| | 9.3 | 67469 | 1.7 | II | 185.66 | 10701 | 16425 | 22500 | 23625 | | | |
| | 7.2 | 87950 | 1.3 | I | 242.02 | 10618 | 16425 | 22500 | 23625 | | | |
| | 5.9 | 106844 | 1.1 | I | 294.01 | 10634 | 16425 | 22500 | 23625 | | | |
| | 9.9 | 63613 | 3.0 | III | 175.05 | 15293 | 22950 | 27000 | 29250 | **SK 9382 - 132M/4** | 1603 | 362 |
| | 8.5 | 74381 | 2.6 | III | 204.68 | 15827 | 22950 | 27000 | 29250 | SK 9382 - 132MH/4 | | |
| | 6 | 105841 | 2.0 | III | 291.25 | 16571 | 22950 | 27000 | 29250 | | | |
| | 4.9 | 128048 | 1.8 | II | 352.36 | 17147 | 22950 | 27000 | 29250 | | | |
| | 3.9 | 163374 | 1.3 | I | 449.57 | 13829 | 22950 | 27000 | 29250 | **SK 9382/42 - 132M/4** | 1702 | 375 |
| | 2.8 | 224691 | 0.9 | * | 618.30 | 13383 | 22950 | 27000 | 29250 | SK 9382/42 - 132MH/4 | | |
| | 2.4 | 259970 | 0.8 | * | 715.38 | 12857 | 22950 | 27000 | 29250 | | | |
| | 6.1 | 102788 | 2.8 | III | 282.85 | | | 30231 | 33750 | **SK 10382 - 132M/4** | 2847 | 366 |
| | 5.2 | 120882 | 2.7 | III | 332.64 | | | 29950 | 33750 | SK 10382 - 132MH/4 | | |
| | 4.9 | 129879 | 2.4 | III | 357.40 | | | 29792 | 33750 | | | |
| | 4.7 | 133172 | 2.3 | III | 366.46 | | | 29732 | 33750 | **SK 10382/52 - 132M/4** | 3010 | 375 |
| | 3.6 | 172888 | 1.8 | II | 475.75 | | | 28868 | 33750 | SK 10382/52 - 132MH/4 | | |
| | 3 | 209988 | 1.5 | II | 577.84 | | | 27821 | 33750 | | | |
| | 2.5 | 251604 | 1.2 | I | 692.36 | | | 26343 | 33750 | | | |
| | 1.9 | 332933 | 0.9 | * | 916.16 | | | 22262 | 33750 | | | |
| | 2.9 | 219011 | 2.4 | III | 602.67 | | | 31109 | 38250 | **SK 11382/52 - 132M/4** | 4858 | 375 |
| | 2.4 | 266042 | 2.0 | III | 732.09 | | | 29610 | 38250 | SK 11382/52 - 132MH/4 | | |
| | 1.8 | 349948 | 1.5 | II | 962.98 | | | 25902 | 38250 | | | |
| | 1.5 | 419492 | 1.3 | I | 1154.35 | | | 21395 | 38250 | | | |
| | 1.3 | 502627 | 1.1 | I | 1383.12 | | | 12344 | 38250 | | | |
| | 0.95 | 665104 | 0.8 | * | 1830.22 | | | | 38250 | | | |

(AGMA Class I = $f_B$ 1.0 - 1.39 II = $f_B$ 1.4 - 1.99 III = $f_B$ ≥ 2.0 * = $f_B$ < 1.0) **(Model Type in blue is an Energy Efficient motor)**


Send Quote Requests to info@automatedpt.com
Call +1(800)985-6929 To Order or Order Online At Nordgearmotors.com

# 15 hp Gearmotors



DRIVESYSTEMS



| Motor Power $P_n$ [hp] | Output Speed $n_2$ [rpm] | Output Torque $T_2$ [lb-in] | Service Factor $f_B$ | AGMA Class | Gear Ratio $i_{tot}$ | Standard Bearings $F_{RN}$ OHL [lb] | Standard Bearings $F_{AN}$ Thrust [lb] | Heavy Duty Bearings (VL) $F_{RVL}$ OHL [lb] | Heavy Duty Bearings (VL) $F_{AVL}$ Thrust [lb] | Model Type | Weight [lb] | Dim. Page |
|---|---|---|---|---|---|---|---|---|---|---|---|---|
| 15 | 377 | 2510 | 3.3 | III | 4.70 | 1415 | 2383 | 3130 | 5225 | **SK 4282 - 160M/4** | 282 | 340 |
| | 354 | 2672 | 3.2 | III | 5.00 | 1438 | 2432 | 3173 | 5301 | **SK 4282 - 160MH/4** | | |
| | 326 | 2901 | 3.2 | III | 5.43 | 1458 | 2507 | 3238 | 5405 | | | |
| | 292 | 3238 | 3.0 | III | 6.06 | 1494 | 2585 | 3326 | 5544 | | | |
| | 248 | 3810 | 2.8 | III | 7.13 | 1530 | 2720 | 3458 | 5744 | | | |
| | 212 | 4451 | 2.5 | III | 8.33 | 1566 | 2842 | 3580 | 5940 | | | |
| | 192 | 4932 | 2.9 | III | 9.23 | 1625 | 2981 | 3697 | 6125 | | | |
| | 163 | 5797 | 2.6 | III | 10.85 | 1654 | 3103 | 3836 | 6314 | | | |
| | 140 | 6775 | 2.3 | III | 12.68 | 1674 | 3231 | 3951 | 6509 | | | |
| | 116 | 8122 | 2.0 | III | 15.20 | 1712 | 3400 | 4118 | 6743 | | | |
| | 97 | 9714 | 1.6 | II | 18.18 | 1726 | 3539 | 4255 | 6750 | | | |
| | 83 | 11461 | 1.3 | I | 21.45 | 1730 | 3654 | 4406 | 6750 | | | |
| | 79 | 11963 | 1.3 | I | 22.39 | 1683 | 3650 | 4399 | 6750 | | | |
| | 67 | 14026 | 1.0 | I | 26.25 | 1692 | 3773 | 4545 | 6750 | | | |
| | 67 | 14122 | 1.1 | I | 26.43 | 1667 | 3762 | 4525 | 6750 | | | |
| | 55 | 17280 | 0.8 | * | 32.34 | 1593 | 3816 | 4655 | 6750 | | | |
| | 136 | 6946 | 3.1 | III | 13.00 | 2666 | 4948 | 5798 | 9000 | **SK 5282 - 160M/4** | 362 | 344 |
| | 115 | 8218 | 2.8 | III | 15.38 | 2768 | 5258 | 6050 | 9000 | **SK 5282 - 160MH/4** | | |
| | 101 | 9399 | 2.6 | III | 17.59 | 2828 | 5499 | 6242 | 9000 | | | |
| | 94 | 10088 | 2.3 | III | 18.88 | 2887 | 5659 | 6363 | 9000 | | | |
| | 87 | 10879 | 2.5 | III | 20.36 | 2889 | 5760 | 6442 | 9000 | | | |
| | 71 | 13358 | 1.9 | II | 25.00 | 2993 | 6181 | 6764 | 9000 | | | |
| | 58 | 16297 | 1.6 | II | 30.50 | 3044 | 6570 | 7040 | 9000 | | | |
| | 53 | 17862 | 1.1 | I | 33.43 | 3062 | 6262 | 7187 | 9000 | | | |
| | 43 | 21800 | 1.0 | I | 40.80 | 3047 | 6518 | 7434 | 9000 | | | |
| | 77 | 12263 | 3.3 | III | 22.95 | 4793 | 8199 | 10024 | 13500 | **SK 6282 - 160M/4** | 547 | 348 |
| | 68 | 13919 | 2.9 | III | 26.05 | 4907 | 8548 | 10325 | 13500 | **SK 6282 - 160MH/4** | | |
| | 59 | 15976 | 2.5 | III | 29.90 | 5040 | 8984 | 10674 | 13500 | | | |
| | 45 | 21095 | 1.3 | I | 39.48 | 5162 | 9765 | 11270 | 13500 | | | |
| | 36 | 26583 | 1.3 | I | 49.75 | 5306 | 10463 | 11867 | 13500 | | | |
| | 29 | 32636 | 1.2 | I | 61.08 | 5434 | 10463 | 12427 | 13500 | | | |
| | 42 | 22687 | 1.8 | II | 42.46 | 5191 | 10001 | 11441 | 13500 | **SK 6382 - 160M/4** | 540 | 350 |
| | 35 | 27288 | 1.6 | II | 51.07 | 5254 | 10463 | 11876 | 13500 | **SK 6382 - 160MH/4** | | |
| | 30 | 31878 | 1.5 | II | 59.66 | 5292 | 10463 | 12229 | 13500 | | | |
| | 24 | 39273 | 1.3 | I | 73.50 | 5243 | 10463 | 12038 | 13500 | | | |
| | 24 | 40170 | 1.3 | I | 75.18 | 5297 | 10463 | 11977 | 13500 | | | |
| | 19 | 49494 | 1.1 | I | 92.63 | 5132 | 10463 | 11257 | 13500 | | | |
| | 15 | 61335 | 0.8 | * | 114.79 | 3854 | 10463 | 10022 | 13500 | | | |
| | 47 | 19914 | 2.9 | III | 37.27 | 5846 | 10559 | 13543 | 18000 | **SK 7282 - 160M/4** | 686 | 352 |
| | 39 | 24055 | 1.6 | II | 45.02 | 5994 | 11241 | 14137 | 18000 | **SK 7282 - 160MH/4** | | |
| | 39 | 24403 | 2.1 | III | 45.67 | 6107 | 11385 | 14267 | 18000 | | | |
| | 31 | 30408 | 1.6 | II | 56.91 | 6210 | 12179 | 14920 | 18000 | | | |
| | 25 | 37258 | 1.4 | II | 69.73 | 6433 | 13050 | 15680 | 18000 | | | |
| | 38 | 24931 | 2.5 | III | 46.66 | 6062 | 11441 | 14283 | 18000 | **SK 7382 - 160M/4** | 701 | 354 |
| | 33 | 28522 | 2.2 | III | 53.38 | 6170 | 11927 | 14715 | 18000 | **SK 7382 - 160MH/4** | | |
| | 30 | 31803 | 2.0 | III | 59.52 | 6188 | 12317 | 15012 | 18000 | | | |
| | 26 | 36387 | 1.8 | II | 68.10 | 6257 | 12841 | 15426 | 18000 | | | |
| | 22 | 42110 | 1.6 | II | 78.81 | 6264 | 13050 | 15883 | 18000 | | | |
| | 19 | 49788 | 1.3 | I | 93.18 | 6323 | 13050 | 16441 | 18000 | | | |
| | 17 | 56953 | 1.2 | I | 106.59 | 6269 | 13050 | 16823 | 18000 | | | |
| | 14 | 65919 | 1.0 | I | 123.37 | 6156 | 13050 | 16909 | 18000 | | | |
| | 12 | 80453 | 0.8 | * | 150.57 | 5794 | 13050 | 16031 | 18000 | | | |

(AGMA Class I = $f_B$ 1.0 - 1.39 II = $f_B$ 1.4 - 1.99 III = $f_B$ ≥ 2.0 * = $f_B$ < 1.0) **(Model Type in blue is an Energy Efficient motor)**


Send Quote Requests to info@automatedpt.com
Call +1(800)985-6929 To Order or Order Online At Nordgearmotors.com

DRIVESYSTEMS

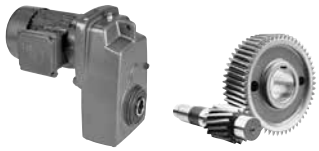

# 15 hp Gearmotors



| Motor Power $P_n$ [hp] | Output Speed $n_2$ [rpm] | Output Torque $T_2$ [lb-in] | Service Factor $f_B$ | AGMA Class | Gear Ratio $i_{tot}$ | Standard Bearings $F_{RN}$ OHL [lb] | Standard Bearings $F_{AN}$ Thrust [lb] | Heavy Duty Bearings (VL) $F_{RVL}$ OHL [lb] | Heavy Duty Bearings (VL) $F_{AVL}$ Thrust [lb] | Model Type | Weight [lb] | Dim. Page |
|---|---|---|---|---|---|---|---|---|---|---|---|---|
| 15 | 30 | 31760 | 1.8 | II | 59.44 | 8064 | 14704 | | | **SK 8282 - 160M/4**<br>SK 8282 - 160MH/4 | 968 | 356 |
| | 31 | 30686 | 3.3 | III | 57.43 | 8017 | 14470 | 17582 | 23625 | **SK 8382 - 160M/4**<br>SK 8382 - 160MH/4 | 977 | 358 |
| | 27 | 34849 | 2.9 | III | 65.22 | 8190 | 15158 | 18099 | 23625 | | | |
| | 23 | 40443 | 2.6 | III | 75.69 | 8363 | 15932 | 18675 | 23625 | | | |
| | 19 | 48591 | 2.2 | III | 90.94 | 8528 | 16425 | 19424 | 23625 | | | |
| | 17 | 55147 | 1.9 | II | 103.21 | 8613 | 16425 | 19919 | 23625 | | | |
| | 15 | 63301 | 1.7 | II | 118.47 | 8658 | 16425 | 20426 | 23625 | | | |
| | 14 | 66993 | 1.6 | II | 125.38 | 8777 | 16425 | 20736 | 23625 | | | |
| | 12 | 76894 | 1.4 | II | 143.91 | 8771 | 16425 | 21240 | 23625 | | | |
| | 12 | 81660 | 1.4 | II | 152.83 | 8595 | 16425 | 21321 | 23625 | | | |
| | 9.5 | 99202 | 1.1 | I | 185.66 | 8539 | 16425 | 22068 | 23625 | | | |
| | 7.3 | 129317 | 0.9 | * | 242.02 | 7727 | 16425 | 22500 | 23625 | | | |
| | 18 | 53908 | 3.9 | III | 100.89 | 12575 | 22950 | 24057 | 29250 | **SK 9382 - 160M/4**<br>SK 9382 - 160MH/4 | 1643 | 362 |
| | 15 | 61752 | 3.6 | III | 115.57 | 12931 | 22950 | 24851 | 29250 | | | |
| | 13 | 72614 | 3.1 | III | 135.90 | 13340 | 22950 | 25855 | 29250 | | | |
| | 12 | 77311 | 2.7 | III | 144.69 | 13313 | 22950 | 26161 | 29250 | | | |
| | 10 | 93533 | 2.4 | III | 175.05 | 13835 | 22950 | 27000 | 29250 | | | |
| | 8.6 | 109365 | 1.8 | II | 204.68 | 14063 | 22950 | 27000 | 29250 | | | |
| | 6.1 | 155621 | 1.4 | II | 291.25 | 14074 | 22950 | 27000 | 29250 | | | |
| | 5 | 188274 | 1.2 | I | 352.36 | 14202 | 22950 | 27000 | 29250 | | | |
| | 4.3 | 219943 | 1.0 | I | 411.63 | 10355 | 22950 | 27000 | 29250 | **SK 9382/52 - 160M/4**<br>SK 9382/52 - 160MH/4 | 1806 | 375 |
| | 9.8 | 96541 | 3.2 | III | 180.68 | | | 30317 | 33750 | **SK 10382 - 160M/4**<br>SK 10382 - 160MH/4 | 2886 | 366 |
| | 6.7 | 140660 | 2.1 | III | 263.25 | | | 29588 | 33750 | | | |
| | 6.3 | 151133 | 1.9 | II | 282.85 | | | 29372 | 33750 | | | |
| | 5.3 | 177737 | 1.8 | II | 332.64 | | | 28744 | 33750 | | | |
| | 5 | 190967 | 1.6 | II | 357.40 | | | 28388 | 33750 | | | |
| | 4.8 | 195808 | 1.6 | II | 366.46 | | | 28249 | 33750 | **SK 10382/52 - 160M/4**<br>SK 10382/52 - 160MH/4 | 3050 | 375 |
| | 3.7 | 254204 | 1.2 | I | 475.75 | | | 26237 | 33750 | | | |
| | 3.1 | 308753 | 1.0 | I | 577.84 | | | 23672 | 33750 | | | |
| | 2.6 | 369944 | 0.8 | * | 692.36 | | | 19676 | 33750 | | | |
| | 5.7 | 166954 | 2.7 | III | 312.46 | | | 32369 | 38250 | **SK 11382/52 - 160M/4**<br>SK 11382/52 - 160MH/4 | 4897 | 375 |
| | 4.9 | 194189 | 2.3 | III | 363.43 | | | 31757 | 38250 | | | |
| | 3.7 | 256357 | 2.1 | III | 479.78 | | | 29950 | 38250 | | | |
| | 2.9 | 322020 | 1.6 | II | 602.67 | | | 27306 | 38250 | | | |
| | 2.4 | 391172 | 1.4 | II | 732.09 | | | 23436 | 38250 | | | |
| | 1.8 | 514542 | 1.0 | I | 962.98 | | | 10204 | 38250 | | | |
| | 1.5 | 616795 | 0.9 | * | 1154.35 | | | | 38250 | | | |
| | 11.0 | 82473 | 3.6 | III | 154.35 | | | 33640 | 33577 | **SK 12382 - 160M/4**<br>SK 12382 - 160MH/4 | 4734 | 372 |
| | 8.8 | 107800 | 3.2 | III | 201.75 | | | 33354 | 35975 | | | |

(AGMA Class I = $f_B$ 1.0 - 1.39 II = $f_B$ 1.4 - 1.99 III = $f_B$ ≥ 2.0 * = $f_B$ < 1.0) **(Model Type in blue is an Energy Efficient motor)**


Send Quote Requests to info@automatedpt.com
Call +1(800)985-6929 To Order or Order Online At Nordgearmotors.com

# 20 hp Gearmotors



DRIVESYSTEMS



| Motor Power $P_n$ [hp] | Output Speed $n_2$ [rpm] | Output Torque $T_2$ [lb-in] | Service Factor $f_B$ | AGMA Class | Gear Ratio $i_{tot}$ | Standard Bearings $F_{RN}$ OHL [lb] | Standard Bearings $F_{AN}$ Thrust [lb] | Heavy Duty Bearings (VL) $F_{RVL}$ OHL [lb] | Heavy Duty Bearings (VL) $F_{AVL}$ Thrust [lb] | Model Type | Weight [lb] | Dim. Page |
|---|---|---|---|---|---|---|---|---|---|---|---|---|
| 20 | 376 | 3357 | 2.5 | III | 4.70 | 1330 | 2255 | 3053 | 5076 | **SK 4282 - 160L/4** | 320 | 340 |
| | 353 | 3570 | 2.4 | III | 5.00 | 1341 | 2295 | 3096 | 5141 | **SK 4282 - 160LH/4** | | |
| | 325 | 3877 | 2.4 | III | 5.43 | 1359 | 2347 | 3155 | 5234 | | | |
| | 291 | 4327 | 2.2 | III | 6.06 | 1373 | 2417 | 3233 | 5344 | | | |
| | 248 | 5091 | 2.1 | III | 7.13 | 1393 | 2516 | 3341 | 5508 | | | |
| | 212 | 5947 | 1.9 | II | 8.33 | 1402 | 2610 | 3449 | 5661 | | | |
| | 191 | 6590 | 2.2 | III | 9.23 | 1460 | 2725 | 3564 | 5837 | | | |
| | 163 | 7747 | 1.9 | II | 10.85 | 1458 | 2810 | 3663 | 5987 | | | |
| | 139 | 9053 | 1.7 | II | 12.68 | 1438 | 2891 | 3760 | 6125 | | | |
| | 116 | 10852 | 1.5 | II | 15.20 | 1440 | 2986 | 3888 | 6293 | | | |
| | 97 | 12980 | 1.2 | I | 18.18 | 1382 | 3040 | 3989 | 6406 | | | |
| | 82 | 15315 | 1.0 | I | 21.45 | 1332 | 3103 | 4086 | 6518 | | | |
| | 79 | 15986 | 0.9 | * | 22.39 | 1265 | 3040 | 4070 | 6458 | | | |
| | 67 | 18742 | 0.8 | * | 26.25 | 1213 | 3103 | 4160 | 6581 | | | |
| | 67 | 18870 | 0.8 | * | 26.43 | 1168 | 3049 | 4131 | 6530 | | | |
| | 246 | 5119 | 2.5 | III | 7.17 | 2207 | 3845 | 4883 | 8177 | **SK 5282 - 160L/4** | 399 | 344 |
| | 203 | 6212 | 2.3 | III | 8.70 | 2291 | 4120 | 5105 | 8566 | **SK 5282 - 160LH/4** | | |
| | 187 | 6754 | 2.6 | III | 9.46 | 2363 | 4262 | 5243 | 8789 | | | |
| | 165 | 7647 | 2.5 | III | 10.71 | 2417 | 4442 | 5398 | 9000 | | | |
| | 136 | 9282 | 2.3 | III | 13.00 | 2477 | 4730 | 5643 | 9000 | | | |
| | 115 | 10981 | 2.1 | III | 15.38 | 2554 | 4995 | 5868 | 9000 | | | |
| | 100 | 12559 | 1.9 | II | 17.59 | 2583 | 5207 | 6032 | 9000 | | | |
| | 93 | 13480 | 1.7 | II | 18.88 | 2626 | 5342 | 6149 | 9000 | | | |
| | 87 | 14536 | 1.9 | II | 20.36 | 2601 | 5420 | 6206 | 9000 | | | |
| | 71 | 17849 | 1.4 | II | 25.00 | 2639 | 5760 | 6476 | 9000 | | | |
| | 58 | 21776 | 1.2 | I | 30.50 | 2601 | 6014 | 6687 | 9000 | | | |
| | 53 | 23868 | 0.9 | * | 33.43 | 2570 | 5544 | 6784 | 9000 | | | |
| | 43 | 29130 | 0.8 | * | 40.80 | 2423 | 5641 | 6946 | 9000 | | | |
| | 119 | 10588 | 2.5 | III | 14.83 | 4093 | 6721 | 8780 | 12629 | **SK 6282 - 160L/4** | 584 | 348 |
| | 94 | 13351 | 2.5 | III | 18.70 | 4304 | 7304 | 9297 | 13381 | **SK 6282 - 160LH/4** | | |
| | 77 | 16386 | 2.4 | III | 22.95 | 4484 | 7877 | 9765 | 13500 | | | |
| | 68 | 18599 | 2.2 | III | 26.05 | 4559 | 8213 | 10037 | 13500 | | | |
| | 59 | 21348 | 1.9 | II | 29.90 | 4628 | 8575 | 10330 | 13500 | | | |
| | 45 | 28188 | 1.0 | I | 39.48 | 4568 | 9203 | 10787 | 13500 | | | |
| | 35 | 35520 | 1.0 | I | 49.75 | 4577 | 9844 | 11268 | 13500 | | | |
| | 29 | 43609 | 0.9 | * | 61.08 | 4572 | 10463 | 11678 | 13500 | | | |
| | 72 | 17435 | 2.2 | III | 24.42 | 4437 | 7965 | 9824 | 13500 | **SK 6382 - 160L/4** | 578 | 350 |
| | 61 | 20505 | 2.0 | III | 28.72 | 4509 | 8386 | 10170 | 13500 | **SK 6382 - 160LH/4** | | |
| | 57 | 22069 | 1.8 | II | 30.91 | 4545 | 8575 | 10312 | 13500 | | | |
| | 49 | 25946 | 1.6 | II | 36.34 | 4577 | 8984 | 10645 | 13500 | | | |
| | 42 | 30315 | 1.3 | I | 42.46 | 4563 | 9380 | 10928 | 13500 | | | |
| | 35 | 36462 | 1.2 | I | 51.07 | 4491 | 9844 | 11273 | 13500 | | | |
| | 30 | 42595 | 1.1 | I | 59.66 | 4372 | 10179 | 11473 | 13500 | | | |
| | 24 | 52477 | 0.9 | * | 73.50 | 4109 | 10463 | 10982 | 13500 | | | |
| | 23 | 53676 | 1.0 | I | 75.18 | 4163 | 10463 | 10865 | 13500 | | | |
| | 19 | 66135 | 0.8 | * | 92.63 | 1613 | 10463 | 9389 | 13500 | | | |
| | 66 | 19199 | 2.6 | III | 26.89 | 5207 | 9155 | 12290 | 17926 | **SK 7282 - 160L/4** | 723 | 352 |
| | 51 | 24732 | 2.1 | III | 34.64 | 5411 | 9936 | 13019 | 18000 | **SK 7282 - 160LH/4** | | |
| | 47 | 26610 | 2.2 | III | 37.27 | 5407 | 10130 | 13160 | 18000 | | | |
| | 39 | 32143 | 1.2 | I | 45.02 | 5414 | 10679 | 13651 | 18000 | | | |
| | 39 | 32607 | 1.6 | II | 45.67 | 5555 | 10870 | 13820 | 18000 | | | |
| | 31 | 40632 | 1.2 | I | 56.91 | 5495 | 11477 | 14324 | 18000 | | | |
| | 25 | 49785 | 1.0 | I | 69.73 | 5544 | 12218 | 14931 | 18000 | | | |

(AGMA Class I = $f_B$ 1.0 - 1.39 II = $f_B$ 1.4 - 1.99 III = $f_B$ ≥ 2.0 * = $f_B$ < 1.0) **(Model Type in blue is an Energy Efficient motor)**


Send Quote Requests to info@automatedpt.com
Call +1(800)985-6929 To Order or Order Online At Nordgearmotors.com

DRIVESYSTEMS



# 20 hp Gearmotors



| Motor Power $P_n$ [hp] | Output Speed $n_2$ [rpm] | Output Torque $T_2$ [lb-in] | Service Factor $f_B$ | AGMA Class | Gear Ratio $i_{tot}$ | Standard Bearings $F_{RN}$ OHL [lb] | Standard Bearings $F_{AN}$ Thrust [lb] | Heavy Duty Bearings (VL) $F_{RVL}$ OHL [lb] | Heavy Duty Bearings (VL) $F_{AVL}$ Thrust [lb] | Model Type | Weight [lb] | Dim. Page |
|---|---|---|---|---|---|---|---|---|---|---|---|---|
| 20 | 58 | 21719 | 2.5 | III | 30.42 | 5236 | 9439 | 12542 | 18000 | **SK 7382 - 160L/4** | 739 | 354 |
| | 48 | 26360 | 2.2 | III | 36.92 | 5351 | 10049 | 13102 | 18000 | SK 7382 - 160LH/4 | | |
| | 38 | 33314 | 1.9 | II | 46.66 | 5483 | 10870 | 13806 | 18000 | | | |
| | 33 | 38112 | 1.6 | II | 53.38 | 5508 | 11277 | 14155 | 18000 | | | |
| | 30 | 42495 | 1.5 | II | 59.52 | 5423 | 11552 | 14369 | 18000 | | | |
| | 26 | 48621 | 1.3 | I | 68.10 | 5346 | 11966 | 14684 | 18000 | | | |
| | 22 | 56268 | 1.2 | I | 78.81 | 5240 | 12416 | 14992 | 18000 | | | |
| | 19 | 66528 | 1.0 | I | 93.18 | 5103 | 12924 | 15401 | 18000 | | | |
| | 17 | 76102 | 0.9 | * | 106.59 | 4871 | 13050 | 15624 | 18000 | | | |
| | 14 | 88082 | 0.8 | * | 123.37 | 4460 | 13050 | 15476 | 18000 | | | |
| | 45 | 27923 | 3.0 | III | 39.11 | 6998 | 12188 | | | **SK 8282 - 160L/4** | 1005 | 356 |
| | 37 | 33921 | 2.8 | III | 47.51 | 7265 | 13079 | | | SK 8282 - 160LH/4 | | |
| | 30 | 42438 | 1.4 | II | 59.44 | 7391 | 14036 | | | | | |
| | 24 | 51556 | 1.4 | II | 72.21 | 7585 | 14990 | | | | | |
| | 57 | 22076 | 2.8 | III | 30.92 | 6710 | 11214 | 14774 | 21256 | **SK 8382 - 160L/4** | 1014 | 358 |
| | 49 | 25617 | 2.7 | III | 35.88 | 6894 | 11822 | 15291 | 22091 | SK 8382 - 160LH/4 | | |
| | 40 | 31122 | 2.7 | III | 43.59 | 7187 | 12749 | 16043 | 23139 | | | |
| | 37 | 34128 | 2.7 | III | 47.80 | 7218 | 13059 | 16364 | 23553 | | | |
| | 31 | 41003 | 2.5 | III | 57.43 | 7364 | 13878 | 17012 | 23625 | | | |
| | 27 | 46565 | 2.1 | III | 65.22 | 7468 | 14447 | 17465 | 23625 | | | |
| | 23 | 54040 | 2.0 | III | 75.69 | 7502 | 15158 | 17960 | 23625 | | | |
| | 19 | 64928 | 1.6 | II | 90.94 | 7488 | 15932 | 18563 | 23625 | | | |
| | 17 | 73689 | 1.5 | II | 103.21 | 7418 | 16425 | 18916 | 23625 | | | |
| | 15 | 84584 | 1.3 | I | 118.47 | 7268 | 16425 | 19280 | 23625 | | | |
| | 14 | 89517 | 1.2 | I | 125.38 | 7342 | 16425 | 19557 | 23625 | | | |
| | 12 | 102747 | 1.1 | I | 143.91 | 7103 | 16425 | 19863 | 23625 | | | |
| | 12 | 109116 | 1.1 | I | 152.83 | 6764 | 16425 | 19832 | 23625 | | | |
| | 9.5 | 132556 | 0.8 | * | 185.66 | 6347 | 16425 | 20275 | 23625 | | | |
| | 21 | 59395 | 2.9 | III | 83.19 | 11311 | 21182 | 22401 | 29250 | **SK 9382 - 160L/4** | 1680 | 362 |
| | 17 | 72032 | 2.9 | III | 100.89 | 11813 | 22766 | 23526 | 29250 | SK 9382 - 160LH/4 | | |
| | 15 | 82513 | 2.7 | III | 115.57 | 12006 | 22950 | 24235 | 29250 | | | |
| | 13 | 97028 | 2.3 | III | 135.90 | 12224 | 22950 | 25092 | 29250 | | | |
| | 12 | 103304 | 2.1 | III | 144.69 | 12103 | 22950 | 25328 | 29250 | | | |
| | 10 | 124980 | 1.8 | II | 175.05 | 12413 | 22950 | 26426 | 29250 | | | |
| | 8.6 | 146135 | 1.3 | I | 204.68 | 12373 | 22950 | 27000 | 29250 | | | |
| | 6.1 | 207944 | 1.0 | I | 291.25 | 11471 | 22950 | 27000 | 29250 | | | |
| | 5 | 251574 | 0.9 | * | 352.36 | 11142 | 22950 | 27000 | 29250 | | | |
| | 10 | 120061 | 2.4 | III | 168.16 | | | 29963 | 33750 | **SK 10382 - 160L/4** | 2924 | 366 |
| | 9.8 | 129000 | 2.4 | III | 180.68 | | | 29808 | 33750 | SK 10382 - 160LH/4 | | |
| | 6.7 | 187952 | 1.6 | II | 263.25 | | | 28472 | 33750 | | | |
| | 6.2 | 201946 | 1.4 | II | 282.85 | | | 28069 | 33750 | | | |
| | 5.3 | 237495 | 1.4 | II | 332.64 | | | 26883 | 33750 | | | |
| | 4.9 | 255173 | 1.2 | I | 357.40 | | | 26199 | 33750 | | | |
| | 4.8 | 261641 | 1.2 | I | 366.46 | | | 25931 | 33750 | **SK 10382/52 - 160L/4** | 3087 | 375 |
| | 3.7 | 339671 | 0.9 | * | 475.75 | | | 21834 | 33750 | SK 10382/52 - 160LH/4 | | |
| | 3.1 | 412560 | 0.8 | * | 577.84 | | | 15748 | 33750 | | | |
| | 10 | 122774 | 2.7 | III | 171.96 | | | 33147 | 34670 | **SK 11382 - 160L/4** | 4772 | 370 |
| | 7.9 | 160472 | 2.4 | III | 224.76 | | | 32499 | 37148 | SK 11382 - 160LH/4 | | |

(AGMA Class I = $f_B$ 1.0 - 1.39 II = $f_B$ 1.4 - 1.99 III = $f_B$ ≥ 2.0 * = $f_B$ < 1.0) **(Model Type in blue is an Energy Efficient motor)**


Send Quote Requests to info@automatedpt.com
Call +1(800)985-6929 To Order or Order Online At Nordgearmotors.com

# 20 hp, 25 hp Gearmotors



DRIVESYSTEMS

GEARMOTORS

| Motor Power $P_n$ [hp] | Output Speed $n_2$ [rpm] | Output Torque $T_2$ [lb-in] | Service Factor $f_B$ | AGMA Class | Gear Ratio $i_{tot}$ | Standard Bearings $F_{RN}$ OHL [lb] | Standard Bearings $F_{AN}$ Thrust [lb] | Heavy Duty Bearings (VL) $F_{RVL}$ OHL [lb] | Heavy Duty Bearings (VL) $F_{AVL}$ Thrust [lb] | Model Type | Weight [lb] | Dim. Page |
|---|---|---|---|---|---|---|---|---|---|---|---|---|
| 20 | 5.9 | 212327 | 2.1 | III | 297.39 | | | 31291 | 38250 | **SK 11382/52 - 160L/4** | 4935 | 375 |
| | 5.6 | 223087 | 2.0 | III | 312.46 | | | 30992 | 38250 | SK 11382/52 - 160H/4 | | |
| | 4.9 | 259478 | 1.7 | II | 363.43 | | | 29842 | 38250 | | | |
| | 3.7 | 342548 | 1.6 | II | 479.78 | | | 26294 | 38250 | | | |
| | 2.9 | 430288 | 1.2 | I | 602.67 | | | 20522 | 38250 | | | |
| | 2.4 | 522690 | 1.0 | I | 732.09 | | | 8393 | 38250 | | | |
| | 1.8 | 687538 | 0.8 | * | 962.98 | | | | 38250 | | | |
| | 15 | 83784 | 3.0 | III | 117.35 | | | 33626 | 30742 | **SK 12382 - 160L/4** | 4772 | 372 |
| | 13 | 97971 | 2.9 | III | 137.22 | | | 33473 | 31950 | SK 12382 - 160LH/4 | | |
| | 11 | 110201 | 2.7 | III | 154.35 | | | 33323 | 32886 | | | |
| | 8.7 | 144043 | 2.4 | III | 201.75 | | | 32805 | 35062 | | | |
| 25 | 405 | 3890 | 3.5 | III | 4.32 | 1913 | 3132 | 4239 | 7101 | **SK 5282 - 180MX/4** | 452 | 344 |
| | 349 | 4510 | 3.3 | III | 5.01 | 1969 | 3303 | 4394 | 7369 | SK 5282 - 180MH/4 | | |
| | 331 | 4762 | 3.3 | III | 5.29 | 1991 | 3366 | 4457 | 7475 | | | |
| | 306 | 5140 | 3.1 | III | 5.71 | 2021 | 3465 | 4543 | 7607 | | | |
| | 276 | 5698 | 3.3 | III | 6.33 | 2057 | 3578 | 4649 | 7819 | | | |
| | 244 | 6455 | 3.0 | III | 7.17 | 2104 | 3724 | 4788 | 8035 | | | |
| | 201 | 7832 | 2.7 | III | 8.70 | 2158 | 3958 | 5011 | 8404 | | | |
| | 185 | 8516 | 2.4 | III | 9.46 | 2225 | 4120 | 5135 | 8593 | | | |
| | 163 | 9641 | 2.3 | III | 10.71 | 2255 | 4268 | 5272 | 8831 | | | |
| | 135 | 11703 | 2.0 | III | 13.00 | 2286 | 4514 | 5492 | 9000 | | | |
| | 114 | 13846 | 1.7 | II | 15.38 | 2322 | 4752 | 5688 | 9000 | | | |
| | 99 | 15835 | 1.5 | II | 17.59 | 2322 | 4898 | 5821 | 9000 | | | |
| | 93 | 16996 | 1.4 | II | 18.88 | 2356 | 5051 | 5931 | 9000 | | | |
| | 86 | 18329 | 1.5 | II | 20.36 | 2295 | 5058 | 5963 | 9000 | | | |
| | 70 | 22506 | 1.1 | I | 25.00 | 2273 | 5326 | 6185 | 9000 | | | |
| | 164 | 9578 | 4.0 | III | 10.64 | 3674 | 5828 | 7958 | 11491 | **SK 6282 - 180MX/4** | 637 | 348 |
| | 142 | 11118 | 3.5 | III | 12.35 | 3773 | 6143 | 8255 | 11882 | SK 6282 - 180MH/4 | | |
| | 118 | 13350 | 3.0 | III | 14.83 | 3890 | 6530 | 8593 | 12389 | | | |
| | 94 | 16834 | 2.3 | III | 18.70 | 4039 | 7074 | 9079 | 13061 | | | |
| | 76 | 20660 | 1.9 | II | 22.95 | 4178 | 7578 | 9536 | 13500 | | | |
| | 67 | 23451 | 1.7 | II | 26.05 | 4203 | 7877 | 9758 | 13500 | | | |
| | 59 | 26917 | 1.5 | II | 29.90 | 4208 | 8199 | 9999 | 13500 | | | |
| | 72 | 21984 | 1.9 | II | 24.42 | 4077 | 7641 | 9549 | 13500 | **SK 6382 - 180MX/4** | 631 | 350 |
| | 61 | 25855 | 1.6 | II | 28.72 | 4093 | 7979 | 9828 | 13500 | SK 6382 - 180MH/4 | | |
| | 57 | 27826 | 1.4 | II | 30.91 | 4082 | 8134 | 9954 | 13500 | | | |
| | 48 | 32714 | 1.2 | I | 36.34 | 4012 | 8467 | 10199 | 13500 | | | |
| | 41 | 38224 | 1.1 | I | 42.46 | 3917 | 8768 | 10411 | 13500 | | | |
| | 34 | 45975 | 1.0 | I | 51.07 | 3690 | 9086 | 10609 | 13500 | | | |
| | 29 | 53708 | 0.9 | * | 59.66 | 3431 | 9290 | 10706 | 13500 | | | |
| | 23 | 67679 | 0.8 | * | 75.18 | | 9655 | 9167 | 13500 | | | |
| | 88 | 17978 | 2.9 | III | 19.97 | 4691 | 8015 | 11225 | 16414 | **SK 7282 - 180MX/4** | 776 | 352 |
| | 77 | 20588 | 2.5 | III | 22.87 | 4788 | 8370 | 11588 | 16922 | SK 7282 - 180MH/4 | | |
| | 65 | 24207 | 2.1 | III | 26.89 | 4903 | 8825 | 12022 | 17557 | | | |
| | 51 | 31184 | 1.6 | II | 34.64 | 4984 | 9545 | 12677 | 18000 | | | |
| | 47 | 33552 | 1.7 | II | 37.27 | 4912 | 9684 | 12780 | 18000 | | | |
| | 38 | 41114 | 1.3 | I | 45.67 | 4991 | 10341 | 13381 | 18000 | | | |

(AGMA Class I = $f_B$ 1.0 - 1.39 II = $f_B$ 1.4 - 1.99 III = $f_B$ ≥ 2.0 * = $f_B$ < 1.0) **(Model Type in blue is an Energy Efficient motor)**


Send Quote Requests to info@automatedpt.com
Call +1(800)985-6929 To Order or Order Online At Nordgearmotors.com

DRIVESYSTEMS



# 25 hp Gearmotors



| Motor Power $P_n$ [hp] | Output Speed $n_2$ [rpm] | Output Torque $T_2$ [lb-in] | Service Factor $f_B$ | AGMA Class | Gear Ratio $i_{tot}$ | Standard Bearings $F_{RN}$ OHL [lb] | Standard Bearings $F_{AN}$ Thrust [lb] | Heavy Duty Bearings (VL) $F_{RVL}$ OHL [lb] | Heavy Duty Bearings (VL) $F_{AVL}$ Thrust [lb] | Model Type | Weight [lb] | Dim. Page |
|---|---|---|---|---|---|---|---|---|---|---|---|---|
| 25 | 75 | 21119 | 2.8 | III | 23.46 | 4714 | 8370 | 11581 | 16922 | **SK 7382 - 180MX/4** | 792 | 354 |
| | 65 | 24198 | 2.4 | III | 26.88 | 4788 | 8739 | 11925 | 17447 | SK 7382 - 180MH/4 | | |
| | 58 | 27385 | 2.1 | III | 30.42 | 4824 | 9083 | 12233 | 17870 | | | |
| | 47 | 33237 | 1.8 | II | 36.92 | 4856 | 9623 | 12701 | 18000 | | | |
| | 38 | 42005 | 1.5 | II | 46.66 | 4871 | 10276 | 13295 | 18000 | | | |
| | 33 | 48054 | 1.3 | I | 53.38 | 4799 | 10663 | 13613 | 18000 | | | |
| | 29 | 53582 | 1.2 | I | 59.52 | 4619 | 10800 | 13707 | 18000 | | | |
| | 26 | 61306 | 1.0 | I | 68.10 | 4412 | 11097 | 13939 | 18000 | | | |
| | 22 | 70947 | 0.9 | * | 78.81 | 4138 | 11367 | 14144 | 18000 | | | |
| | 19 | 83884 | 0.8 | * | 93.18 | 3807 | 11795 | 14411 | 18000 | | | |
| | 57 | 27835 | 3.8 | III | 30.92 | 6377 | 10949 | 14517 | 20885 | **SK 8382 - 180MX/4** | 1067 | 358 |
| | 49 | 32300 | 3.3 | III | 35.88 | 6503 | 11525 | 14992 | 21598 | SK 8382 - 180MH/4 | | |
| | 40 | 39241 | 2.4 | III | 43.59 | 6721 | 12287 | 15689 | 22592 | | | |
| | 37 | 43031 | 2.5 | III | 47.80 | 6698 | 12627 | 15914 | 22955 | | | |
| | 30 | 51700 | 2.1 | III | 57.43 | 6714 | 13291 | 16466 | 23625 | | | |
| | 27 | 58713 | 1.7 | II | 65.22 | 6721 | 13768 | 16823 | 23625 | | | |
| | 23 | 68139 | 1.6 | II | 75.69 | 6629 | 14308 | 17231 | 23625 | | | |
| | 19 | 81867 | 1.3 | I | 90.94 | 6406 | 14990 | 17669 | 23625 | | | |
| | 17 | 92913 | 1.2 | I | 103.21 | 6185 | 15354 | 17901 | 23625 | | | |
| | 15 | 106650 | 1.0 | I | 118.47 | 5850 | 15779 | 18158 | 23625 | | | |
| | 14 | 112871 | 1.0 | I | 125.38 | 5852 | 16110 | 18387 | 23625 | | | |
| | 12 | 129552 | 0.9 | * | 143.91 | 5346 | 16425 | 18482 | 23625 | | | |
| | 27 | 58740 | 3.7 | III | 65.25 | 10294 | 18963 | 20743 | 27335 | **SK 9382 - 180MX/4** | 1733 | 362 |
| | 24 | 64988 | 3.3 | III | 72.19 | 10454 | 19611 | 21224 | 27911 | SK 9382 - 180MH/4 | | |
| | 21 | 74890 | 2.8 | III | 83.19 | 10649 | 20579 | 21911 | 28775 | | | |
| | 17 | 90824 | 2.5 | III | 100.89 | 10964 | 22048 | 22975 | 29250 | | | |
| | 15 | 104040 | 2.2 | III | 115.57 | 11059 | 22950 | 23598 | 29250 | | | |
| | 13 | 122342 | 1.8 | II | 135.90 | 11135 | 22950 | 24415 | 29250 | | | |
| | 12 | 130255 | 1.6 | II | 144.69 | 10856 | 22950 | 24496 | 29250 | | | |
| | 10 | 157586 | 1.4 | II | 175.05 | 10901 | 22950 | 25443 | 29250 | | | |
| | 8.7 | 180668 | 1.2 | I | 200.69 | 7526 | 20185 | 21553 | 27556 | **SK 9382/52 - 180MX/4** | 1896 | 375 |
| | 7.5 | 209907 | 1.0 | I | 233.17 | 6869 | 20745 | 21823 | 27779 | SK 9382/52 - 180MH/4 | | |
| | 5.9 | 265154 | 0.8 | * | 294.54 | 5414 | 21182 | 22084 | 27689 | | | |
| | 12 | 126402 | 2.5 | III | 140.41 | | | 29855 | 33750 | **SK 10382 - 180MX/4** | 2977 | 366 |
| | 10 | 151383 | 1.9 | II | 168.16 | | | 29367 | 33750 | SK 10382 - 180MH/4 | | |
| | 9.7 | 162654 | 1.9 | II | 180.68 | | | 29113 | 33750 | | | |
| | 5.8 | 271582 | 1.1 | I | 301.68 | | | 25502 | 33750 | **SK 10382/52 - 180MX/4** | 3140 | 375 |
| | 4.8 | 329899 | 0.9 | * | 366.46 | | | 22451 | 33750 | SK 10382/52 - 180MH/4 | | |
| | 10 | 154804 | 3.9 | III | 171.96 | | | 32609 | 34229 | **SK 11382 - 180MX/4** | 4825 | 370 |
| | 7.8 | 202336 | 3.0 | III | 224.76 | | | 31554 | 36495 | SK 11382 - 180MH/4 | | |
| | 5.9 | 267720 | 1.7 | II | 297.39 | | | 29552 | 38250 | **SK 11382/52 - 180MX/4** | 4988 | 375 |
| | 5.6 | 281287 | 1.6 | II | 312.46 | | | 29045 | 38250 | SK 11382/52 - 180MH/4 | | |
| | 4.8 | 327171 | 1.4 | II | 363.43 | | | 27063 | 38250 | | | |
| | 3.6 | 431913 | 1.2 | I | 479.78 | | | 20387 | 38250 | | | |
| | 2.9 | 542543 | 1.0 | I | 602.67 | | | | 38250 | | | |
| | 2.4 | 659051 | 0.8 | * | 732.09 | | | | 38250 | | | |
| | 25 | 62224 | 5.1 | III | 69.12 | | | 33813 | 26528 | **SK 12382 - 180MX/4** | 4825 | 372 |
| | 21 | 74404 | 4.8 | III | 82.65 | | | 33714 | 27790 | SK 12382 - 180MH/4 | | |
| | 17 | 90815 | 4.6 | III | 100.88 | | | 33554 | 29205 | | | |
| | 15 | 105642 | 4.3 | III | 117.35 | | | 33381 | 30303 | | | |
| | 13 | 123530 | 4.1 | III | 137.22 | | | 33136 | 31439 | | | |
| | 11 | 138951 | 3.9 | III | 154.35 | | | 32891 | 32310 | | | |
| | 8.7 | 181622 | 3.4 | III | 201.75 | | | 32054 | 34229 | | | |

(AGMA Class I = $f_B$ 1.0 - 1.39 II = $f_B$ 1.4 - 1.99 III = $f_B$ ≥ 2.0 * = $f_B$ < 1.0) **(Model Type in blue is an Energy Efficient motor)**


Send Quote Requests to info@automatedpt.com
Call +1(800)985-6929 To Order or Order Online At Nordgearmotors.com

# 30 hp Gearmotors



DRIVESYSTEMS

GEARMOTORS

| Motor Power $P_n$ [hp] | Output Speed $n_2$ [rpm] | Output Torque $T_2$ [lb-in] | Service Factor $f_B$ | AGMA Class | Gear Ratio $i_{tot}$ | Standard Bearings $F_{RN}$ OHL [lb] | Standard Bearings $F_{AN}$ Thrust [lb] | Heavy Duty Bearings (VL) $F_{RVL}$ OHL [lb] | Heavy Duty Bearings (VL) $F_{AVL}$ Thrust [lb] | Model Type | Weight [lb] | Dim. Page |
|---|---|---|---|---|---|---|---|---|---|---|---|---|
| 30 | 406 | 4654 | 2.9 | III | 4.32 | 1841 | 3067 | 4174 | 7000 | **SK 5282 - 180LX/4** | 452 | 344 |
| | 350 | 5397 | 2.8 | III | 5.01 | 1890 | 3209 | 4327 | 7250 | **SK 5282 - 180LH/4** | | |
| | 332 | 5699 | 2.7 | III | 5.29 | 1908 | 3265 | 4381 | 7355 | | | |
| | 307 | 6151 | 2.6 | III | 5.71 | 1931 | 3362 | 4464 | 7475 | | | |
| | 277 | 6819 | 2.7 | III | 6.33 | 1958 | 3465 | 4568 | 7670 | | | |
| | 245 | 7724 | 2.5 | III | 7.17 | 1991 | 3596 | 4694 | 7855 | | | |
| | 202 | 9372 | 2.2 | III | 8.70 | 2016 | 3796 | 4892 | 8177 | | | |
| | 186 | 10191 | 2.0 | III | 9.46 | 2081 | 3958 | 5009 | 8404 | | | |
| | 164 | 11538 | 1.9 | II | 10.71 | 2099 | 4082 | 5137 | 8593 | | | |
| | 135 | 14005 | 1.7 | II | 13.00 | 2086 | 4289 | 5315 | 8901 | | | |
| | 114 | 16569 | 1.4 | II | 15.38 | 2090 | 4471 | 5495 | 9000 | | | |
| | 100 | 18950 | 1.3 | I | 17.59 | 2048 | 4610 | 5603 | 9000 | | | |
| | 93 | 20339 | 1.1 | I | 18.88 | 2075 | 4707 | 5697 | 9000 | | | |
| | 86 | 21934 | 1.3 | I | 20.36 | 1973 | 4700 | 5702 | 9000 | | | |
| | 70 | 26932 | 1.0 | I | 25.00 | 1888 | 4898 | 5873 | 9000 | | | |
| | 187 | 10116 | 2.4 | III | 9.39 | 3371 | 5369 | 7544 | 10845 | **SK 6282 - 180LX/4** | 637 | 348 |
| | 165 | 11462 | 3.3 | III | 10.64 | 3512 | 5688 | 7814 | 11270 | **SK 6282 - 180LH/4** | | |
| | 142 | 13305 | 2.9 | III | 12.35 | 3591 | 5958 | 8087 | 11657 | | | |
| | 118 | 15976 | 2.5 | III | 14.83 | 3670 | 6314 | 8406 | 12114 | | | |
| | 94 | 20145 | 1.9 | II | 18.70 | 3762 | 6829 | 8840 | 12731 | | | |
| | 76 | 24724 | 1.6 | II | 22.95 | 3843 | 7259 | 9250 | 13295 | | | |
| | 67 | 28064 | 1.4 | II | 26.05 | 3834 | 7506 | 9448 | 13500 | | | |
| | 59 | 32211 | 1.2 | I | 29.90 | 3780 | 7801 | 9664 | 13500 | | | |
| | 72 | 26308 | 1.6 | II | 24.42 | 3724 | 7270 | 9234 | 13295 | **SK 6382 - 180LX/4** | 631 | 350 |
| | 61 | 30940 | 1.3 | I | 28.72 | 3643 | 7567 | 9452 | 13500 | **SK 6382 - 180LH/4** | | |
| | 57 | 33299 | 1.2 | I | 30.91 | 3600 | 7715 | 9558 | 13500 | | | |
| | 48 | 39149 | 1.0 | I | 36.34 | 3461 | 7954 | 9731 | 13500 | | | |
| | 41 | 45742 | 0.9 | * | 42.46 | 3245 | 8134 | 9855 | 13500 | | | |
| | 34 | 55018 | 0.8 | * | 51.07 | 2869 | 8318 | 9936 | 13500 | | | |
| | 29 | 64272 | 0.8 | * | 59.66 | 2448 | 8397 | 9646 | 13500 | | | |
| | 88 | 21514 | 2.4 | III | 19.97 | 4455 | 7774 | 11016 | 16076 | **SK 7282 - 180LX/4** | 776 | 352 |
| | 77 | 24638 | 2.1 | III | 22.87 | 4523 | 8105 | 11342 | 16574 | **SK 7282 - 180LH/4** | | |
| | 65 | 28969 | 1.8 | II | 26.89 | 4568 | 8519 | 11732 | 17114 | | | |
| | 51 | 37318 | 1.4 | II | 34.64 | 4556 | 9155 | 12308 | 17984 | | | |
| | 47 | 40151 | 1.4 | II | 37.27 | 4433 | 9245 | 12371 | 18000 | | | |
| | 38 | 49200 | 1.0 | I | 45.67 | 4406 | 9747 | 12859 | 18000 | | | |
| | 75 | 25273 | 2.3 | III | 23.46 | 4424 | 8066 | 11318 | 16520 | **SK 7382 - 180LX/4** | 792 | 354 |
| | 65 | 28958 | 2.0 | III | 26.88 | 4430 | 8395 | 11619 | 16976 | **SK 7382 - 180LH/4** | | |
| | 58 | 32771 | 1.8 | II | 30.42 | 4437 | 8699 | 11885 | 17361 | | | |
| | 48 | 39774 | 1.5 | II | 36.92 | 4383 | 9155 | 12278 | 17984 | | | |
| | 38 | 50267 | 1.2 | I | 46.66 | 4259 | 9731 | 12789 | 18000 | | | |
| | 33 | 57506 | 1.1 | I | 53.38 | 4084 | 9952 | 12998 | 18000 | | | |
| | 29 | 64121 | 1.0 | I | 59.52 | 3789 | 10033 | 13028 | 18000 | | | |
| | 26 | 73364 | 0.9 | * | 68.10 | 3474 | 10226 | 13149 | 18000 | | | |
| | 22 | 84902 | 0.8 | * | 78.81 | 3002 | 10341 | 13237 | 18000 | | | |
| | 62 | 30520 | 2.9 | III | 28.33 | 6008 | 10350 | 13957 | 20162 | **SK 8282 - 180LX/4** | 1058 | 356 |
| | 45 | 42133 | 2.0 | III | 39.11 | 6118 | 11396 | | | **SK 8282 - 180LH/4** | | |

(AGMA Class I = $f_B$ 1.0 - 1.39 II = $f_B$ 1.4 - 1.99 III = $f_B$ ≥ 2.0 * = $f_B$ < 1.0) **(Model Type in blue is an Energy Efficient motor)**


Send Quote Requests to info@automatedpt.com
Call +1(800)985-6929 To Order or Order Online At Nordgearmotors.com

DRIVESYSTEMS



# 30 hp, 40 hp Gearmotors



| Motor Power $P_n$ [hp] | Output Speed $n_2$ [rpm] | Output Torque $T_2$ [lb-in] | Service Factor $f_B$ | AGMA Class | Gear Ratio $i_{tot}$ | Standard Bearings $F_{RN}$ OHL [lb] | Standard Bearings $F_{AN}$ Thrust [lb] | Heavy Duty Bearings (VL) $F_{RVL}$ OHL [lb] | Heavy Duty Bearings (VL) $F_{AVL}$ Thrust [lb] | Model Type | Weight [lb] | Dim. Page |
|---|---|---|---|---|---|---|---|---|---|---|---|---|
| **30** | 57 | 33310 | 3.2 | III | 30.92 | 6017 | 10620 | 14193 | 20453 | **SK 8382 - 180LX/4** | 1067 | 358 |
| | 49 | 38653 | 2.8 | III | 35.88 | 6089 | 11106 | 14625 | 21085 | SK 8382 - 180LH/4 | | |
| | 40 | 46959 | 2.0 | III | 43.59 | 6219 | 11822 | 15237 | 21983 | | | |
| | 37 | 51495 | 2.1 | III | 47.80 | 6129 | 12112 | 15422 | 22266 | | | |
| | 31 | 61869 | 1.7 | II | 57.43 | 6048 | 12668 | 15896 | 22955 | | | |
| | 27 | 70261 | 1.4 | II | 65.22 | 5913 | 13059 | 16184 | 23400 | | | |
| | 23 | 81541 | 1.3 | I | 75.69 | 5731 | 13550 | 16470 | 23625 | | | |
| | 19 | 97969 | 1.1 | I | 90.94 | 5303 | 13968 | 16749 | 23625 | | | |
| | 17 | 111188 | 1.0 | I | 103.21 | 4901 | 14263 | 16846 | 23625 | | | |
| | 15 | 127627 | 0.9 | * | 118.47 | 4347 | 14447 | 16920 | 23625 | | | |
| | 14 | 135072 | 0.8 | * | 125.38 | 4340 | 14704 | 17087 | 23625 | | | |
| | 36 | 52184 | 3.5 | III | 48.44 | 9353 | 16652 | 18981 | 25027 | **SK 9382 - 180LX/4** | 1733 | 362 |
| | 32 | 59779 | 3.3 | III | 55.49 | 9542 | 17447 | 19640 | 25803 | SK 9382 - 180LH/4 | | |
| | 27 | 70294 | 3.1 | III | 65.25 | 9738 | 18394 | 20338 | 26687 | | | |
| | 24 | 77770 | 2.7 | III | 72.19 | 9833 | 19024 | 20801 | 27250 | | | |
| | 21 | 89620 | 2.4 | III | 83.19 | 9950 | 19928 | 21418 | 28049 | | | |
| | 17 | 108689 | 2.1 | III | 100.89 | 10145 | 21182 | 22385 | 29144 | | | |
| | 15 | 124503 | 1.8 | II | 115.57 | 10080 | 22048 | 22952 | 29250 | | | |
| | 13 | 146405 | 1.5 | II | 135.9 | 9963 | 22950 | 23567 | 29250 | | | |
| | 12 | 155874 | 1.4 | II | 144.69 | 9576 | 22950 | 23616 | 29250 | | | |
| | 10 | 188581 | 1.2 | I | 175.05 | 9403 | 22950 | 24431 | 29250 | | | |
| | 17 | 112804 | 2.8 | III | 104.71 | | | 30080 | 32132 | **SK 10382 - 180LX/4** | 2977 | 366 |
| | 12 | 151263 | 2.1 | III | 140.41 | | | 29369 | 33750 | SK 10382 - 180LH/4 | | |
| | 10 | 181158 | 1.6 | II | 168.16 | | | 28654 | 33750 | | | |
| | 9.7 | 194646 | 1.6 | II | 180.68 | | | 28283 | 33750 | | | |
| | 5.8 | 324999 | 1.0 | I | 301.68 | | | 22745 | 33750 | **SK 10382/52 - 180LX/4** | 3140 | 375 |
| | 4.8 | 394786 | 0.8 | * | 366.46 | | | 17546 | 33750 | SK 10382/52 - 180LH/4 | | |
| | 10 | 185252 | 3.2 | III | 171.96 | | | 31970 | 33685 | **SK 11382 - 180LX/4** | 4825 | 370 |
| | 7.8 | 242133 | 2.5 | III | 224.76 | | | 30418 | 35800 | SK 11382 - 180LH/4 | | |
| | 5.9 | 320377 | 1.4 | II | 297.39 | | | 27385 | 37989 | **SK 11382/52 - 180LX/4** | 4988 | 375 |
| | 5.6 | 336612 | 1.3 | I | 312.46 | | | 26597 | 38250 | SK 11382/52 - 180LH/4 | | |
| | 4.8 | 391522 | 1.1 | I | 363.43 | | | 23411 | 38250 | | | |
| | 3.7 | 516866 | 1.0 | I | 479.78 | | | 9725 | 38250 | | | |
| | 2.9 | 649255 | 0.8 | * | 602.67 | | | | 38250 | | | |
| | 11 | 166281 | 3.2 | III | 154.35 | | | 32382 | 31592 | **SK 12382 - 180LX/4** | 4825 | 372 |
| | 8.7 | 217345 | 2.8 | III | 201.75 | | | 31154 | 33309 | SK 12382 - 180LH/4 | | |
| **40** | 405 | 6217 | 2.9 | III | 4.39 | 2743 | 3947 | 6098 | 8791 | **SK 6282 - 200L/4** | 794 | 348 |
| | 365 | 6912 | 2.8 | III | 4.88 | 2797 | 4095 | 6253 | 9020 | SK 6282 - 200LH/4 | | |
| | 324 | 7790 | 2.6 | III | 5.50 | 2858 | 4282 | 6442 | 9284 | | | |
| | 308 | 8187 | 2.5 | III | 5.78 | 2882 | 4345 | 6512 | 9389 | | | |
| | 297 | 8484 | 2.5 | III | 5.99 | 2905 | 4394 | 6572 | 9479 | | | |
| | 264 | 9546 | 2.8 | III | 6.74 | 2954 | 4574 | 6748 | 9725 | | | |
| | 228 | 11076 | 2.1 | III | 7.82 | 3006 | 4793 | 6977 | 10076 | | | |
| | 190 | 13300 | 1.8 | II | 9.39 | 3060 | 5092 | 7252 | 10451 | | | |
| | 167 | 15070 | 2.5 | III | 10.64 | 3202 | 5360 | 7538 | 10845 | | | |
| | 144 | 17492 | 2.2 | III | 12.35 | 3224 | 5598 | 7760 | 11162 | | | |
| | 120 | 21005 | 1.9 | II | 14.83 | 3238 | 5884 | 8026 | 11545 | | | |
| | 95 | 26486 | 1.5 | II | 18.70 | 3229 | 6262 | 8368 | 12035 | | | |
| | 78 | 32506 | 1.2 | I | 22.95 | 3200 | 6624 | 8683 | 12490 | | | |

(AGMA Class I = $f_B$ 1.0 - 1.39 II = $f_B$ 1.4 - 1.99 III = $f_B$ ≥ 2.0 * = $f_B$ < 1.0) **(Model Type in blue is an Energy Efficient motor)**


Send Quote Requests to info@automatedpt.com
Call +1(800)985-6929 To Order or Order Online At Nordgearmotors.com

# 40 hp Gearmotors



DRIVESYSTEMS

GEARMOTORS

| Motor Power $P_n$ [hp] | Output Speed $n_2$ [rpm] | Output Torque $T_2$ [lb-in] | Service Factor $f_B$ | AGMA Class | Gear Ratio $i_{tot}$ | Standard Bearings $F_{RN}$ OHL [lb] | Standard Bearings $F_{AN}$ Thrust [lb] | Heavy Duty Bearings (VL) $F_{RVL}$ OHL [lb] | Heavy Duty Bearings (VL) $F_{AVL}$ Thrust [lb] | Model Type | Weight [lb] | Dim. Page |
|---|---|---|---|---|---|---|---|---|---|---|---|---|
| 40 | 206 | 12266 | 2.9 | III | 8.66 | 3501 | 5481 | 8674 | 12679 | **SK 7282 - 200L/4** | 933 | 352 |
| | 188 | 13427 | 3.3 | III | 9.48 | 3616 | 5733 | 8937 | 13050 | SK 7282 - 200LH/4 | | |
| | 179 | 14050 | 2.7 | III | 9.92 | 3562 | 5733 | 8962 | 13093 | | | |
| | 159 | 15807 | 3.1 | III | 11.16 | 3706 | 6035 | 9275 | 13543 | | | |
| | 138 | 18257 | 2.8 | III | 12.89 | 3767 | 6311 | 9576 | 13984 | | | |
| | 109 | 23073 | 2.5 | III | 16.29 | 3870 | 6818 | 10105 | 14742 | | | |
| | 89 | 28285 | 1.8 | II | 19.97 | 3971 | 7268 | 10562 | 15444 | | | |
| | 78 | 32393 | 1.6 | II | 22.87 | 3944 | 7542 | 10834 | 15820 | | | |
| | 66 | 38086 | 1.3 | I | 26.89 | 3902 | 7862 | 11129 | 16283 | | | |
| | 76 | 33228 | 1.8 | II | 23.46 | 3805 | 7470 | 10769 | 15770 | **SK 7382 - 200L/4** | 948 | 354 |
| | 66 | 38072 | 1.5 | II | 26.88 | 3719 | 7700 | 10989 | 16076 | SK 7382 - 200LH/4 | | |
| | 59 | 43086 | 1.4 | II | 30.42 | 3618 | 7938 | 11214 | 16360 | | | |
| | 48 | 52293 | 1.1 | I | 36.92 | 3391 | 8183 | 11453 | 16760 | | | |
| | 38 | 66088 | 0.9 | * | 46.66 | 3017 | 8519 | 11725 | 17222 | | | |
| | 102 | 24645 | 3.0 | III | 17.40 | 5112 | 8323 | 12062 | 17395 | **SK 8282 - 200L/4** | 1215 | 356 |
| | 84 | 29928 | 3.0 | III | 21.13 | 5279 | 8930 | 12618 | 18225 | SK 8282 - 200LH/4 | | |
| | 73 | 34701 | 2.7 | III | 24.50 | 5346 | 9326 | 13007 | 18788 | | | |
| | 63 | 40126 | 2.2 | III | 28.33 | 5375 | 9722 | 13381 | 19305 | | | |
| | 58 | 43794 | 2.4 | III | 30.92 | 5306 | 9911 | 13574 | 19557 | **SK 8382 - 200L/4** | 1224 | 358 |
| | 50 | 50820 | 2.1 | III | 35.88 | 5267 | 10316 | 13898 | 20063 | SK 8382 - 200LH/4 | | |
| | 41 | 61740 | 1.5 | II | 43.59 | 5220 | 10895 | 14418 | 20786 | | | |
| | 37 | 67703 | 1.6 | II | 47.80 | 4995 | 11054 | 14447 | 20916 | | | |
| | 31 | 81343 | 1.3 | I | 57.43 | 4676 | 11414 | 14724 | 21357 | | | |
| | 27 | 92376 | 1.1 | I | 65.22 | 4388 | 11635 | 14848 | 21564 | | | |
| | 24 | 107206 | 1.0 | I | 75.69 | 3888 | 11880 | 14969 | 21737 | | | |
| | 20 | 128806 | 0.8 | * | 90.94 | 3094 | 11995 | 14877 | 21773 | | | |
| | 50 | 50437 | 3.3 | III | 35.61 | 8258 | 14301 | 17136 | 22588 | **SK 9382 - 200L/4** | 1890 | 362 |
| | 42 | 59389 | 3.1 | III | 41.93 | 8408 | 15149 | 17784 | 23364 | SK 9382 - 200LH/4 | | |
| | 37 | 68609 | 2.9 | III | 48.44 | 8543 | 15820 | 18360 | 24086 | | | |
| | 32 | 78595 | 2.7 | III | 55.49 | 8591 | 16468 | 18889 | 24710 | | | |
| | 27 | 92419 | 2.3 | III | 65.25 | 8627 | 17280 | 19501 | 25394 | | | |
| | 25 | 102249 | 2.1 | III | 72.19 | 8579 | 17813 | 19888 | 25886 | | | |
| | 21 | 117829 | 1.8 | II | 83.19 | 8492 | 18423 | 20369 | 26390 | | | |
| | 18 | 142899 | 1.6 | II | 100.89 | 8417 | 19519 | 21200 | 27250 | | | |
| | 15 | 163691 | 1.4 | II | 115.57 | 8156 | 20122 | 21542 | 27644 | | | |
| | 13 | 192486 | 1.2 | I | 135.9 | 7643 | 20745 | 21962 | 28049 | | | |
| | 19 | 129386 | 2.4 | III | 91.35 | | | 29801 | 30233 | **SK 10382 - 200L/4** | 3133 | 366 |
| | 17 | 148309 | 2.1 | III | 104.71 | | | 29432 | 31217 | SK 10382 - 200LH/4 | | |
| | 13 | 198874 | 1.6 | II | 140.41 | | | 28161 | 33230 | | | |
| | 16 | 159173 | 3.8 | III | 112.38 | | | 32524 | 29581 | **SK 11382 - 200L/4** | 4981 | 370 |
| | 14 | 185163 | 3.3 | III | 130.73 | | | 31973 | 30645 | SK 11382 - 200LH/4 | | |
| | 12 | 216522 | 2.8 | III | 152.87 | | | 31176 | 31743 | | | |
| | 10 | 243561 | 2.5 | III | 171.96 | | | 30373 | 32519 | | | |
| | 7.9 | 318346 | 1.9 | II | 224.76 | | | 27477 | 34340 | | | |
| | 8.8 | 285755 | 2.1 | III | 201.75 | | | 28870 | 31543 | **SK 12382 - 200L/4** | 4981 | 372 |
| | | | | | | | | | | SK 12382 - 200LH/4 | | |

(AGMA Class I = $f_B$ 1.0 - 1.39 II = $f_B$ 1.4 - 1.99 III = $f_B$ ≥ 2.0 * = $f_B$ < 1.0) **(Model Type in blue is an Energy Efficient motor)**


Send Quote Requests to info@automatedpt.com
Call +1(800)985-6929 To Order or Order Online At Nordgearmotors.com

DRIVESYSTEMS



# 50 hp Gearmotors



| Motor Power $P_n$ [hp] | Output Speed $n_2$ [rpm] | Output Torque $T_2$ [lb-in] | Service Factor $f_B$ | AGMA Class | Gear Ratio $i_{tot}$ | Standard Bearings $F_{RN}$ OHL [lb] | Standard Bearings $F_{AN}$ Thrust [lb] | Heavy Duty Bearings (VL) $F_{RVL}$ OHL [lb] | Heavy Duty Bearings (VL) $F_{AVL}$ Thrust [lb] | Model Type | Weight [lb] | Dim. Page |
|---|---|---|---|---|---|---|---|---|---|---|---|---|
| **50** | 402 | 7838 | 2.3 | III | 4.39 | 2608 | 3834 | 5994 | 8651 | **SK 6282 - 225S/4** | 867 | 348 |
| | 362 | 8714 | 2.2 | III | 4.88 | 2648 | 3971 | 6143 | 8847 | SK 6282 - 225SH/4 | | |
| | 321 | 9821 | 2.1 | III | 5.50 | 2693 | 4127 | 6307 | 9106 | | | |
| | 305 | 10321 | 2.0 | III | 5.78 | 2700 | 4194 | 6374 | 9194 | | | |
| | 295 | 10696 | 2.0 | III | 5.99 | 2718 | 4241 | 6422 | 9252 | | | |
| | 262 | 12035 | 2.2 | III | 6.74 | 2736 | 4388 | 6599 | 9479 | | | |
| | 226 | 13964 | 1.7 | II | 7.82 | 2756 | 4597 | 6784 | 9772 | | | |
| | 188 | 16767 | 1.5 | II | 9.39 | 2754 | 4806 | 7025 | 10091 | | | |
| | 166 | 18999 | 2.0 | III | 10.64 | 2894 | 5092 | 7279 | 10487 | | | |
| | 143 | 22053 | 1.8 | II | 12.35 | 2855 | 5267 | 7459 | 10742 | | | |
| | 119 | 26481 | 1.5 | II | 14.83 | 2772 | 5481 | 7661 | 11039 | | | |
| | 94 | 33391 | 1.2 | I | 18.70 | 2648 | 5762 | 7931 | 11399 | | | |
| | 77 | 40980 | 1.0 | I | 22.95 | 2511 | 6046 | 8141 | 11732 | | | |
| | 414 | 7607 | 3.0 | III | 4.26 | 2925 | 4167 | 7180 | 10494 | **SK 7282 - 225S/4** | 1005 | 352 |
| | 333 | 9464 | 2.8 | III | 5.30 | 3047 | 4500 | 7589 | 11081 | SK 7282 - 225SH/4 | | |
| | 278 | 11357 | 2.6 | III | 6.36 | 3141 | 4784 | 7920 | 11572 | | | |
| | 236 | 13374 | 2.4 | III | 7.49 | 3206 | 5042 | 8222 | 12008 | | | |
| | 204 | 15464 | 2.3 | III | 8.66 | 3256 | 5292 | 8494 | 12398 | | | |
| | 186 | 16928 | 2.6 | III | 9.48 | 3377 | 5508 | 8748 | 12762 | | | |
| | 178 | 17714 | 2.1 | III | 9.92 | 3287 | 5508 | 8744 | 12762 | | | |
| | 158 | 19928 | 2.4 | III | 11.16 | 3427 | 5798 | 9056 | 13219 | | | |
| | 137 | 23017 | 2.3 | III | 12.89 | 3431 | 6035 | 9313 | 13606 | | | |
| | 108 | 29088 | 2.0 | III | 16.29 | 3454 | 6444 | 9756 | 14254 | | | |
| | 88 | 35659 | 1.4 | II | 19.97 | 3454 | 6827 | 10163 | 14861 | | | |
| | 77 | 40838 | 1.3 | I | 22.87 | 3362 | 7027 | 10375 | 15149 | | | |
| | 66 | 48016 | 1.1 | I | 26.89 | 3193 | 7245 | 10584 | 15494 | | | |
| | 75 | 41891 | 1.4 | II | 23.46 | 3150 | 6905 | 10256 | 15005 | **SK 7382 - 225S/4** | 1021 | 354 |
| | 66 | 47998 | 1.2 | I | 26.88 | 2977 | 7097 | 10400 | 15221 | SK 7382 - 225SH/4 | | |
| | 58 | 54319 | 1.1 | I | 30.42 | 2768 | 7175 | 10519 | 15444 | | | |
| | 48 | 65926 | 0.9 | * | 36.92 | 2322 | 7315 | 10604 | 15595 | | | |
| | 38 | 83318 | 0.8 | * | 46.66 | 1685 | 7398 | 10670 | 15770 | | | |
| | 101 | 31070 | 2.4 | III | 17.40 | 4723 | 7994 | 11754 | 16983 | **SK 8282 - 225S/4** | 1288 | 356 |
| | 84 | 37731 | 2.4 | III | 21.13 | 4813 | 8512 | 12245 | 17678 | SK 8282 - 225SH/4 | | |
| | 72 | 43748 | 2.1 | III | 24.50 | 4788 | 8858 | 12569 | 18135 | | | |
| | 62 | 50587 | 1.7 | II | 28.33 | 4732 | 9207 | 12872 | 18608 | | | |
| | 57 | 55212 | 1.9 | II | 30.92 | 4586 | 9311 | 12962 | 18727 | **SK 8382 - 225S/4** | 1297 | 358 |
| | 49 | 64069 | 1.7 | II | 35.88 | 4397 | 9599 | 13201 | 19091 | SK 8382 - 225SH/4 | | |
| | 40 | 77836 | 1.2 | I | 43.59 | 4181 | 10024 | 13547 | 19649 | | | |
| | 37 | 85354 | 1.3 | I | 47.80 | 3827 | 10089 | 13518 | 19618 | | | |
| | 31 | 102549 | 1.0 | I | 57.43 | 3249 | 10202 | 13610 | 19778 | | | |
| | 27 | 116460 | 0.9 | * | 65.22 | 2700 | 10301 | 13534 | 19809 | | | |
| | 23 | 135155 | 0.8 | * | 75.69 | 1906 | 10217 | 13367 | 19681 | | | |
| | 66 | 48016 | 2.6 | III | 26.89 | 6122 | 10082 | 13543 | 17762 | **SK 9282 - 225S/4** | 1951 | 360 |
| | 57 | 54980 | 2.5 | III | 30.79 | 6199 | 10512 | 13948 | 18311 | SK 9282 - 225SH/4 | | |
| | 51 | 61390 | 2.3 | III | 34.38 | 6226 | 10836 | 14272 | 18695 | | | |

(AGMA Class I = $f_B$ 1.0 - 1.39 II = $f_B$ 1.4 - 1.99 III = $f_B$ ≥ 2.0 * = $f_B$ < 1.0) **(Model Type in blue is an Energy Efficient motor)**


Send Quote Requests to info@automatedpt.com
Call +1(800)985-6929 To Order or Order Online At Nordgearmotors.com

# 50 hp, 60 hp Gearmotors



NORD DRIVESYSTEMS



| Motor Power $P_n$ [hp] | Output Speed $n_2$ [rpm] | Output Torque $T_2$ [lb-in] | Service Factor $f_B$ | AGMA Class | Gear Ratio $i_{tot}$ | Standard Bearings $F_{RN}$ OHL [lb] | Standard Bearings $F_{AN}$ Thrust [lb] | Heavy Duty Bearings (VL) $F_{RVL}$ OHL [lb] | Heavy Duty Bearings (VL) $F_{AVL}$ Thrust [lb] | Model Type | Weight [lb] | Dim. Page |
|---|---|---|---|---|---|---|---|---|---|---|---|---|
| **50** | 50 | 63587 | 2.6 | III | 35.61 | 7650 | 13826 | 16774 | 21983 | **SK 9382 - 225S/4** | 1962 | 362 |
| | 42 | 74872 | 2.4 | III | 41.93 | 7702 | 14533 | 17336 | 22662 | **SK 9382 - 225SH/4** | | |
| | 36 | 86496 | 2.3 | III | 48.44 | 7697 | 15149 | 17825 | 23213 | | | |
| | 32 | 99085 | 2.1 | III | 55.49 | 7634 | 15644 | 18315 | 23702 | | | |
| | 27 | 116513 | 1.8 | II | 65.25 | 7466 | 16259 | 18779 | 24239 | | | |
| | 24 | 128905 | 1.6 | II | 72.19 | 7304 | 16628 | 19087 | 24593 | | | |
| | 21 | 148548 | 1.4 | II | 83.19 | 6975 | 17114 | 19393 | 24869 | | | |
| | 17 | 180153 | 1.2 | I | 100.89 | 6667 | 17987 | 19996 | 25475 | | | |
| | 15 | 206367 | 1.1 | I | 115.57 | 6055 | 18245 | 20158 | 25598 | | | |
| | 13 | 242669 | 0.9 | * | 135.9 | 5132 | 18542 | 20360 | 25598 | | | |
| | 27 | 116852 | 2.7 | III | 65.44 | | | 30017 | 27506 | **SK 10382 - 225S/4** | 3206 | 366 |
| | 24 | 129834 | 2.5 | III | 72.71 | | | 29792 | 28130 | **SK 10382 - 225SH/4** | | |
| | 19 | 163118 | 1.9 | II | 91.35 | | | 29104 | 29563 | | | |
| | 17 | 186975 | 1.7 | II | 104.71 | | | 28499 | 30377 | | | |
| | 13 | 250722 | 1.3 | I | 140.41 | | | 26377 | 32132 | | | |
| | 16 | 200670 | 3.0 | III | 112.38 | | | 31597 | 28971 | **SK 11382 - 225S/4** | 5054 | 370 |
| | 14 | 233437 | 2.6 | III | 130.73 | | | 30688 | 29966 | **SK 11382 - 225SH/4** | | |
| | 12 | 272971 | 2.2 | III | 152.87 | | | 29358 | 30893 | | | |
| | 10 | 307059 | 2.0 | III | 171.96 | | | 27986 | 31543 | | | |
| | 7.9 | 401341 | 1.5 | II | 224.76 | | | 22741 | 32990 | | | |
| | 17 | 180136 | 3.1 | III | 100.88 | | | 32085 | 26912 | **SK 12382 - 225S/4** | 5054 | 372 |
| | 15 | 209545 | 2.9 | III | 117.35 | | | 31367 | 27657 | **SK 12382 - 225SH/4** | | |
| | 13 | 245026 | 2.8 | III | 137.22 | | | 30326 | 28375 | | | |
| | 11 | 275614 | 2.6 | III | 154.35 | | | 29259 | 28834 | | | |
| | 8.7 | 360253 | 1.7 | II | 201.75 | | | 25333 | 29727 | | | |
| **60** | 403 | 9379 | 1.9 | II | 4.39 | 2466 | 3713 | 5870 | 8474 | **SK 6282 - 225M/4** | 939 | 348 |
| | 363 | 10425 | 1.8 | II | 4.88 | 2491 | 3827 | 6005 | 8651 | **SK 6282 - 225MH/4** | | |
| | 322 | 11750 | 1.7 | II | 5.50 | 2511 | 3965 | 6152 | 8861 | | | |
| | 306 | 12348 | 1.7 | II | 5.78 | 2518 | 4030 | 6217 | 8946 | | | |
| | 295 | 12797 | 1.7 | II | 5.99 | 2516 | 4068 | 6262 | 9020 | | | |
| | 263 | 14399 | 1.8 | II | 6.74 | 2518 | 4194 | 6397 | 9209 | | | |
| | 226 | 16706 | 1.4 | II | 7.82 | 2511 | 4352 | 6568 | 9479 | | | |
| | 166 | 22731 | 1.7 | II | 10.64 | 2563 | 4793 | 7016 | 10107 | | | |
| | 143 | 26384 | 1.5 | II | 12.35 | 2480 | 4939 | 7155 | 10303 | | | |
| | 415 | 9101 | 3.5 | III | 4.26 | 2808 | 4061 | 7085 | 10343 | **SK 7282 - 225M/4** | 1078 | 352 |
| | 351 | 10767 | 3.2 | III | 5.04 | 2887 | 4295 | 7371 | 10766 | **SK 7282 - 225MH/4** | | |
| | 334 | 11323 | 3.2 | III | 5.30 | 2900 | 4365 | 7452 | 10888 | | | |
| | 296 | 12775 | 3.0 | III | 5.98 | 2943 | 4543 | 7664 | 11189 | | | |
| | 278 | 13587 | 2.9 | III | 6.36 | 2968 | 4633 | 7760 | 11351 | | | |
| | 236 | 16001 | 2.5 | III | 7.49 | 2997 | 4876 | 8039 | 11741 | | | |
| | 204 | 18501 | 2.0 | III | 8.66 | 3013 | 5076 | 8276 | 12105 | | | |
| | 187 | 20252 | 2.7 | III | 9.48 | 3132 | 5292 | 8532 | 12479 | | | |
| | 178 | 21192 | 1.8 | II | 9.92 | 3004 | 5240 | 8512 | 12418 | | | |
| | 159 | 23842 | 2.3 | III | 11.16 | 3128 | 5517 | 8798 | 12866 | | | |
| | 137 | 27537 | 1.9 | II | 12.89 | 3094 | 5733 | 9020 | 13176 | | | |
| | 109 | 34801 | 1.6 | II | 16.29 | 3026 | 6055 | 9407 | 13739 | | | |
| | 89 | 42663 | 1.2 | I | 19.97 | 2948 | 6363 | 9745 | 14254 | | | |
| | 77 | 48858 | 1.1 | I | 22.87 | 2786 | 6496 | 9909 | 14461 | | | |
| | 75 | 50118 | 1.2 | I | 23.46 | 2502 | 6352 | 9709 | 14254 | **SK 7382 - 225M/4** | 1094 | 354 |
| | 66 | 57425 | 1.0 | I | 26.88 | 2221 | 6415 | 9774 | 14393 | **SK 7382 - 225MH/4** | | |
| | 58 | 64987 | 0.9 | * | 30.42 | 1908 | 6424 | 9799 | 14438 | | | |

(AGMA Class I = $f_B$ 1.0 - 1.39 II = $f_B$ 1.4 - 1.99 III = $f_B$ ≥ 2.0 * = $f_B$ < 1.0) **(Model Type in blue is an Energy Efficient motor)**


Send Quote Requests to info@automatedpt.com
Call +1(800)985-6929 To Order or Order Online At Nordgearmotors.com

DRIVESYSTEMS



# 60 hp, 75 hp Gearmotors



| Motor Power $P_n$ [hp] | Output Speed $n_2$ [rpm] | Output Torque $T_2$ [lb-in] | Service Factor $f_B$ | AGMA Class | Gear Ratio $i_{tot}$ | Standard Bearings $F_{RN}$ OHL [lb] | Standard Bearings $F_{AN}$ Thrust [lb] | Heavy Duty Bearings (VL) $F_{RVL}$ OHL [lb] | Heavy Duty Bearings (VL) $F_{AVL}$ Thrust [lb] | Model Type | Weight [lb] | Dim. Page |
|---|---|---|---|---|---|---|---|---|---|---|---|---|
| **60** | 183 | 20658 | 2.8 | III | 9.67 | 4097 | 6356 | 10042 | 14490 | **SK 8282 - 225M/4** | 1360 | 356 |
| | 163 | 23201 | 3.9 | III | 10.86 | 4262 | 6671 | 10397 | 14985 | SK 8282 - 225MH/4 | | |
| | 137 | 27687 | 3.3 | III | 12.96 | 4304 | 7043 | 10809 | 15550 | | | |
| | 117 | 32430 | 2.6 | III | 15.18 | 4334 | 7367 | 11126 | 16056 | | | |
| | 102 | 37172 | 2.3 | III | 17.40 | 4325 | 7668 | 11394 | 16472 | | | |
| | 84 | 45141 | 2.1 | III | 21.13 | 4329 | 8087 | 11837 | 17091 | | | |
| | 72 | 52340 | 1.8 | II | 24.50 | 4248 | 8404 | 12098 | 17507 | | | |
| | 57 | 66055 | 1.6 | II | 30.92 | 3843 | 8663 | 12344 | 17876 | **SK 8382 - 225M/4** | 1369 | 358 |
| | 49 | 76652 | 1.4 | II | 35.88 | 3524 | 8845 | 12497 | 18108 | SK 8382 - 225MH/4 | | |
| | 41 | 93123 | 1.0 | I | 43.59 | 3161 | 9133 | 12699 | 18488 | | | |
| | 37 | 102117 | 1.0 | I | 47.80 | 2628 | 9045 | 12548 | 18311 | | | |
| | 76 | 49456 | 2.9 | III | 23.15 | 5668 | 9232 | 12843 | 16792 | **SK 9282 - 225M/4** | 2024 | 360 |
| | 66 | 57446 | 2.6 | III | 26.89 | 5690 | 9686 | 13223 | 17282 | SK 9282 - 225MH/4 | | |
| | 57 | 65778 | 2.4 | III | 30.79 | 5702 | 10017 | 13613 | 17703 | | | |
| | 51 | 73447 | 2.0 | III | 34.38 | 5684 | 10312 | 13878 | 18047 | | | |
| | 50 | 76075 | 2.8 | III | 35.61 | 7027 | 13264 | 16335 | 21323 | **SK 9382 - 225M/4** | 2035 | 362 |
| | 42 | 89577 | 2.4 | III | 41.93 | 6982 | 13826 | 16839 | 21841 | SK 9382 - 225MH/4 | | |
| | 37 | 103484 | 2.1 | III | 48.44 | 6849 | 14301 | 17237 | 22300 | | | |
| | 32 | 118545 | 1.8 | II | 55.49 | 6653 | 14742 | 17597 | 22662 | | | |
| | 25 | 154222 | 1.4 | II | 72.19 | 6005 | 15469 | 18142 | 23175 | | | |
| | 21 | 177722 | 1.2 | I | 83.19 | 5456 | 15770 | 18362 | 23364 | | | |
| | 18 | 215535 | 1.0 | I | 100.89 | 4824 | 16310 | 18788 | 23663 | | | |
| | 15 | 246896 | 0.9 | * | 115.57 | 3949 | 16416 | 18756 | 23510 | | | |
| | 31 | 121258 | 2.6 | III | 56.76 | | | 29943 | 26044 | **SK 10382 - 225M/4** | 3279 | 366 |
| | 27 | 139802 | 2.2 | III | 65.44 | | | 29606 | 26892 | SK 10382 - 225MH/4 | | |
| | 24 | 155333 | 2.1 | III | 72.71 | | | 29279 | 27506 | | | |
| | 19 | 195154 | 1.6 | II | 91.35 | | | 28269 | 28766 | | | |
| | 17 | 223696 | 1.4 | II | 104.71 | | | 27371 | 29563 | | | |
| | 23 | 164519 | 3.3 | III | 77.01 | | | 32418 | 26064 | **SK 11382 - 225M/4** | 5127 | 370 |
| | 19 | 196692 | 2.9 | III | 92.07 | | | 31696 | 27131 | SK 11382 - 225MH/4 | | |
| | 16 | 240081 | 2.5 | III | 112.38 | | | 30483 | 28240 | | | |
| | 14 | 279283 | 2.2 | III | 130.73 | | | 29122 | 29068 | | | |
| | 12 | 326582 | 1.9 | II | 152.87 | | | 27090 | 29966 | | | |
| | 10 | 367364 | 1.7 | II | 171.96 | | | 24923 | 30497 | | | |
| | 15 | 250699 | 3.2 | III | 117.35 | | | 30139 | 26613 | **SK 12382 - 225M/4** | 5127 | 372 |
| | 13 | 293148 | 2.7 | III | 137.22 | | | 28573 | 27131 | SK 12382 - 225MH/4 | | |
| | 11 | 329743 | 2.4 | III | 154.35 | | | 26937 | 27479 | | | |
| **75** | 394 | 11990 | 3.6 | III | 4.52 | 3440 | 4763 | 8244 | 11898 | **SK 8282 - 250M/4** | 1766 | 356 |
| | 258 | 18356 | 3.3 | III | 6.92 | 3665 | 5486 | 9081 | 13097 | SK 8282 - 250MH/4 | | |
| | 216 | 21911 | 2.9 | III | 8.26 | 3715 | 5774 | 9430 | 13613 | | | |
| | 184 | 25651 | 2.2 | III | 9.67 | 3737 | 6039 | 9729 | 14033 | | | |
| | 164 | 28808 | 3.2 | III | 10.86 | 3877 | 6336 | 10069 | 14513 | | | |
| | 138 | 34379 | 2.6 | III | 12.96 | 3861 | 6660 | 10393 | 15035 | | | |
| | 117 | 40268 | 2.1 | III | 15.18 | 3807 | 6932 | 10674 | 15399 | | | |
| | 102 | 46157 | 1.9 | II | 17.40 | 3713 | 7146 | 10886 | 15725 | | | |
| | 84 | 56051 | 1.7 | II | 21.13 | 3602 | 7463 | 11232 | 16236 | | | |
| | 73 | 64990 | 1.4 | II | 24.50 | 3375 | 7668 | 11401 | 16499 | | | |

(AGMA Class I = $f_B$ 1.0 - 1.39 II = $f_B$ 1.4 - 1.99 III = $f_B$ ≥ 2.0 * = $f_B$ < 1.0) **(Model Type in blue is an Energy Efficient motor)**


Send Quote Requests to info@automatedpt.com
Call +1(800)985-6929 To Order or Order Online At Nordgearmotors.com

# 75 hp Gearmotors



DRIVESYSTEMS

GEARMOTORS

| Motor Power $P_n$ [hp] | Output Speed $n_2$ [rpm] | Output Torque $T_2$ [lb-in] | Service Factor $f_B$ | AGMA Class | Gear Ratio $i_{tot}$ | Standard Bearings $F_{RN}$ OHL [lb] | Standard Bearings $F_{AN}$ Thrust [lb] | Heavy Duty Bearings (VL) $F_{RVL}$ OHL [lb] | Heavy Duty Bearings (VL) $F_{AVL}$ Thrust [lb] | Model Type | Weight [lb] | Dim. Page |
|---|---|---|---|---|---|---|---|---|---|---|---|---|
| 75 | 308 | 15332 | 3.7 | III | 5.78 | 4165 | 5499 | 8910 | 11840 | **SK 9282 - 250M/4**<br>SK 9282 - 250MH/4 | 2430 | 360 |
| | 252 | 18728 | 3.6 | III | 7.06 | 4334 | 5902 | 9376 | 12402 | | | |
| | 206 | 22919 | 3.4 | III | 8.64 | 4493 | 6334 | 9853 | 13012 | | | |
| | 175 | 27004 | 3.2 | III | 10.18 | 4601 | 6687 | 10251 | 13502 | | | |
| | 148 | 31859 | 3.6 | III | 12.01 | 4815 | 7144 | 10737 | 14121 | | | |
| | 121 | 38994 | 3.3 | III | 14.70 | 4919 | 7603 | 11239 | 14747 | | | |
| | 103 | 45971 | 3.0 | III | 17.33 | 4973 | 7992 | 11633 | 15253 | | | |
| | 89 | 53398 | 2.6 | III | 20.13 | 4970 | 8318 | 11999 | 15647 | | | |
| | 77 | 61409 | 2.4 | III | 23.15 | 5078 | 8755 | 12434 | 16209 | | | |
| | 66 | 71330 | 2.1 | III | 26.89 | 5036 | 9056 | 12753 | 16551 | | | |
| | 58 | 81676 | 1.9 | II | 30.79 | 4916 | 9335 | 13055 | 16900 | | | |
| | 52 | 91199 | 1.6 | II | 34.38 | 4793 | 9594 | 13277 | 17118 | | | |
| | 50 | 94462 | 2.2 | III | 35.61 | 6104 | 12380 | 15671 | 20288 | **SK 9382 - 250M/4**<br>SK 9382 - 250MH/4 | 2441 | 362 |
| | 42 | 111227 | 1.9 | II | 41.93 | 5861 | 12866 | 16049 | 20682 | | | |
| | 37 | 128496 | 1.7 | II | 48.44 | 5553 | 13156 | 16340 | 20950 | | | |
| | 32 | 147197 | 1.4 | II | 55.49 | 5191 | 13412 | 16585 | 21119 | | | |
| | 25 | 191496 | 1.1 | I | 72.19 | 3992 | 13739 | 16785 | 21186 | | | |
| | 21 | 220676 | 1.0 | I | 83.19 | 3123 | 13826 | 16785 | 21015 | | | |
| | 18 | 267628 | 0.8 | * | 100.89 | 2007 | 13961 | 16938 | 20984 | | | |
| | 85 | 55706 | 3.5 | III | 21.00 | | | 30742 | 20023 | **SK 10382 - 250M/4**<br>SK 10382 - 250MH/4 | 3685 | 366 |
| | 76 | 62550 | 3.4 | III | 23.58 | | | 30686 | 20642 | | | |
| | 66 | 72100 | 3.3 | III | 27.18 | | | 30598 | 21384 | | | |
| | 60 | 79023 | 3.4 | III | 29.79 | | | 30528 | 21904 | | | |
| | 52 | 91119 | 3.3 | III | 34.35 | | | 30386 | 22691 | | | |
| | 43 | 108760 | 2.8 | III | 41.00 | | | 30143 | 23621 | | | |
| | 37 | 127196 | 2.4 | III | 47.95 | | | 29842 | 24428 | | | |
| | 31 | 150566 | 2.1 | III | 56.76 | | | 29383 | 25387 | | | |
| | 27 | 173591 | 1.8 | II | 65.44 | | | 28850 | 26044 | | | |
| | 25 | 192876 | 1.7 | II | 72.71 | | | 28334 | 26593 | | | |
| | 20 | 242322 | 1.3 | I | 91.35 | | | 26703 | 27637 | | | |
| | 17 | 277761 | 1.1 | I | 104.71 | | | 25223 | 28217 | | | |
| | 56 | 84779 | 3.9 | III | 31.96 | | | 33617 | 20691 | **SK 11382 - 250M/4**<br>SK 11382 - 250MH/4 | 5532 | 370 |
| | 47 | 101359 | 3.7 | III | 38.21 | | | 33435 | 21643 | | | |
| | 38 | 123721 | 3.5 | III | 46.64 | | | 33134 | 22671 | | | |
| | 33 | 143934 | 3.3 | III | 54.26 | | | 32805 | 23486 | | | |
| | 28 | 168286 | 3.1 | III | 63.44 | | | 32342 | 24327 | | | |
| | 23 | 204282 | 2.7 | III | 77.01 | | | 31505 | 25322 | | | |
| | 19 | 244232 | 2.4 | III | 92.07 | | | 30350 | 26276 | | | |
| | 16 | 298107 | 2.0 | III | 112.38 | | | 28368 | 27173 | | | |
| | 14 | 346784 | 1.8 | II | 130.73 | | | 26071 | 27925 | | | |
| | 12 | 405514 | 1.5 | II | 152.87 | | | 22444 | 28467 | | | |
| | 10 | 456154 | 1.3 | I | 171.96 | | | 18162 | 28879 | | | |
| | 26 | 183353 | 3.9 | III | 69.12 | | | 32013 | 23409 | **SK 12382 - 250M/4**<br>SK 12382 - 250MH/4 | 5532 | 372 |
| | 22 | 219243 | 3.6 | III | 82.65 | | | 31102 | 24057 | | | |
| | 18 | 267602 | 3.0 | III | 100.88 | | | 29556 | 24721 | | | |
| | 15 | 311291 | 2.6 | III | 117.35 | | | 27799 | 25040 | | | |
| | 13 | 364000 | 2.2 | III | 137.22 | | | 25119 | 25322 | | | |
| | 12 | 409440 | 1.9 | II | 154.35 | | | 22158 | 25486 | | | |

(AGMA Class I = $f_B$ 1.0 - 1.39 II = $f_B$ 1.4 - 1.99 III = $f_B$ ≥ 2.0 * = $f_B$ < 1.0) **(Model Type in blue is an Energy Efficient motor)**


Send Quote Requests to info@automatedpt.com
Call +1(800)985-6929 To Order or Order Online At Nordgearmotors.com

DRIVESYSTEMS



# 100 hp Gearmotors



| Motor Power $P_n$ [hp] | Output Speed $n_2$ [rpm] | Output Torque $T_2$ [lb-in] | Service Factor $f_B$ | AGMA Class | Gear Ratio $i_{tot}$ | Standard Bearings $F_{RN}$ OHL [lb] | Standard Bearings $F_{AN}$ Thrust [lb] | Heavy Duty Bearings (VL) $F_{RVL}$ OHL [lb] | Heavy Duty Bearings (VL) $F_{AVL}$ Thrust [lb] | Model Type | Weight [lb] | Dim. Page |
|---|---|---|---|---|---|---|---|---|---|---|---|---|
| **100** | 396 | 15932 | 2.7 | III | 4.52 | 3182 | 4525 | 7992 | 11540 | **SK 8282 - 280S/4** | 2152 | 356 |
| | 258 | 24392 | 2.5 | III | 6.92 | 3238 | 5119 | 8741 | 12582 | SK 8282 - 280SH/4 | | |
| | 216 | 29115 | 2.2 | III | 8.26 | 3206 | 5346 | 9000 | 12994 | | | |
| | 185 | 34086 | 1.7 | II | 9.67 | 3150 | 5546 | 9232 | 13331 | | | |
| | 165 | 38280 | 2.4 | III | 10.86 | 3242 | 5830 | 9533 | 13766 | | | |
| | 138 | 45682 | 2.0 | III | 12.96 | 3101 | 6010 | 9763 | 14146 | | | |
| | 118 | 53508 | 1.6 | II | 15.18 | 2909 | 6197 | 9911 | 14373 | | | |
| | 103 | 61333 | 1.4 | II | 17.40 | 2684 | 6266 | 10022 | 14585 | | | |
| | 85 | 74481 | 1.3 | I | 21.13 | 2351 | 6460 | 10213 | 14868 | | | |
| | 73 | 86359 | 1.1 | I | 24.50 | 1913 | 6460 | 10184 | 14868 | | | |
| | 309 | 20374 | 2.8 | III | 5.78 | 3917 | 5283 | 8723 | 11520 | **SK 9282 - 280S/4** | 2816 | 360 |
| | 253 | 24886 | 2.7 | III | 7.06 | 4016 | 5652 | 9151 | 12049 | SK 9282 - 280SH/4 | | |
| | 207 | 30455 | 2.5 | III | 8.64 | 4118 | 6008 | 9583 | 12582 | | | |
| | 176 | 35883 | 2.4 | III | 10.18 | 4151 | 6323 | 9920 | 12992 | | | |
| | 149 | 42334 | 2.7 | III | 12.01 | 4316 | 6721 | 10386 | 13568 | | | |
| | 122 | 51816 | 2.5 | III | 14.70 | 4304 | 7074 | 10798 | 14076 | | | |
| | 103 | 61086 | 2.2 | III | 17.33 | 4217 | 7364 | 11115 | 14418 | | | |
| | 89 | 70956 | 2.0 | III | 20.13 | 4109 | 7592 | 11399 | 14722 | | | |
| | 77 | 81601 | 1.8 | II | 23.15 | 4129 | 7916 | 11763 | 15129 | | | |
| | 66 | 94784 | 1.6 | II | 26.89 | 3902 | 8147 | 11990 | 15372 | | | |
| | 58 | 108531 | 1.5 | II | 30.79 | 3600 | 8251 | 12173 | 15523 | | | |
| | 52 | 121185 | 1.2 | I | 34.38 | 3326 | 8332 | 12258 | 15597 | | | |
| | 50 | 125521 | 1.7 | II | 35.61 | 4541 | 11048 | 14598 | 18635 | **SK 9382 - 280S/4** | 2827 | 362 |
| | 43 | 147798 | 1.4 | II | 41.93 | 3989 | 11207 | 14771 | 18725 | SK 9382 - 280SH/4 | | |
| | 37 | 170745 | 1.2 | I | 48.44 | 3346 | 11279 | 14843 | 18695 | | | |
| | 32 | 195595 | 1.1 | I | 55.49 | 2567 | 11279 | 14823 | 18576 | | | |
| | 25 | 254460 | 0.8 | * | 72.19 | 493 | 10942 | 14558 | 17845 | | | |
| | 85 | 74022 | 2.7 | III | 21.00 | | | 30580 | 19580 | **SK 10382 - 280S/4** | 4070 | 366 |
| | 76 | 83116 | 2.6 | III | 23.58 | | | 30481 | 20120 | SK 10382 - 280SH/4 | | |
| | 66 | 95806 | 2.5 | III | 27.18 | | | 30326 | 20777 | | | |
| | 60 | 105006 | 2.6 | III | 29.79 | | | 30200 | 21281 | | | |
| | 52 | 121079 | 2.5 | III | 34.35 | | | 29948 | 21938 | | | |
| | 44 | 144520 | 2.1 | III | 41.00 | | | 29511 | 22763 | | | |
| | 37 | 169018 | 1.8 | II | 47.95 | | | 28962 | 23468 | | | |
| | 32 | 200072 | 1.5 | II | 56.76 | | | 28125 | 24156 | | | |
| | 27 | 230668 | 1.3 | I | 65.44 | | | 27131 | 24703 | | | |
| | 25 | 256293 | 1.3 | I | 72.71 | | | 26152 | 25103 | | | |
| | 20 | 321997 | 1.0 | I | 91.35 | | | 22923 | 25794 | | | |
| | 17 | 369089 | 0.8 | * | 104.71 | | | 19742 | 26084 | | | |
| | 56 | 112655 | 2.9 | III | 31.96 | | | 33289 | 20201 | **SK 11382 - 280S/4** | 5918 | 370 |
| | 47 | 134685 | 2.8 | III | 38.21 | | | 32963 | 21026 | SK 11382 - 280SH/4 | | |
| | 38 | 164400 | 2.6 | III | 46.64 | | | 32420 | 21956 | | | |
| | 33 | 191260 | 2.5 | III | 54.26 | | | 31829 | 22635 | | | |
| | 28 | 223618 | 2.4 | III | 63.44 | | | 30976 | 23335 | | | |
| | 23 | 271450 | 2.0 | III | 77.01 | | | 29414 | 24212 | | | |
| | 19 | 324535 | 1.8 | II | 92.07 | | | 27189 | 24840 | | | |
| | 16 | 396125 | 1.5 | II | 112.38 | | | 23101 | 25486 | | | |
| | 14 | 460806 | 1.3 | I | 130.73 | | | 17687 | 25855 | | | |
| | 12 | 538847 | 1.1 | I | 152.87 | | | 1458 | 26147 | | | |
| | 10 | 606137 | 1.0 | I | 171.96 | | | | 26276 | | | |

(AGMA Class I = $f_B$ 1.0 - 1.39 II = $f_B$ 1.4 - 1.99 III = $f_B$ ≥ 2.0 * = $f_B$ < 1.0) **(Model Type in blue is an Energy Efficient motor)**


Send Quote Requests to info@automatedpt.com
Call +1(800)985-6929 To Order or Order Online At Nordgearmotors.com

# 100 hp, 125 hp Gearmotors



DRIVESYSTEMS



| Motor Power $P_n$ [hp] | Output Speed $n_2$ [rpm] | Output Torque $T_2$ [lb-in] | Service Factor $f_B$ | AGMA Class | Gear Ratio $i_{tot}$ | Standard Bearings $F_{RN}$ OHL [lb] | Standard Bearings $F_{AN}$ Thrust [lb] | Heavy Duty Bearings (VL) $F_{RVL}$ OHL [lb] | Heavy Duty Bearings (VL) $F_{AVL}$ Thrust [lb] | Model Type | Weight [lb] | Dim. Page |
|---|---|---|---|---|---|---|---|---|---|---|---|---|
| **100** | 26 | 243639 | 2.9 | III | 69.12 | | | 30368 | 21886 | **SK 12382 - 280S/4** | 5918 | 372 |
| | 22 | 291331 | 2.7 | III | 82.65 | | | 28647 | 22311 | SK 12382 - 280SH/4 | | |
| | 18 | 355589 | 2.2 | III | 100.88 | | | 25594 | 22489 | | | |
| | 15 | 413644 | 1.9 | II | 117.35 | | | 21843 | 22563 | | | |
| | 13 | 483683 | 1.6 | II | 137.22 | | | 15059 | 22347 | | | |
| | 12 | 544064 | 1.5 | II | 154.35 | | | | 22097 | | | |
| **125** | 334 | 23555 | 3.1 | III | 5.34 | 3618 | 4955 | 8406 | 11050 | **SK 9282 - 280M/4** | 2926 | 360 |
| | 309 | 25495 | 3.1 | III | 5.78 | 3647 | 5076 | 8541 | 11248 | SK 9282 - 280MH/4 | | |
| | 253 | 31141 | 2.9 | III | 7.06 | 3697 | 5378 | 8928 | 11725 | | | |
| | 207 | 38110 | 2.6 | III | 8.64 | 3710 | 5688 | 9302 | 12146 | | | |
| | 175 | 44903 | 2.1 | III | 10.18 | 3668 | 5920 | 9599 | 12481 | | | |
| | 149 | 52975 | 2.3 | III | 12.01 | 3785 | 6282 | 10026 | 13012 | | | |
| | 121 | 64840 | 2.0 | III | 14.70 | 3645 | 6581 | 10366 | 13372 | | | |
| | 103 | 76441 | 1.8 | II | 17.33 | 3447 | 6732 | 10593 | 13655 | | | |
| | 89 | 88792 | 1.6 | II | 20.13 | 3193 | 6863 | 10784 | 13786 | | | |
| | 77 | 102112 | 1.4 | II | 23.15 | 3105 | 7144 | 11077 | 14121 | | | |
| | 66 | 118609 | 1.3 | I | 26.89 | 2693 | 7211 | 11198 | 14213 | | | |
| | 58 | 135812 | 1.2 | I | 30.79 | 2234 | 7211 | 11250 | 14213 | | | |
| | 343 | 22937 | 3.3 | III | 5.20 | | | 29320 | 13433 | **SK 10282 - 280M/4** | 4126 | 364 |
| | 308 | 25583 | 3.2 | III | 5.80 | | | 30170 | 13826 | SK 10282 - 280MH/4 | | |
| | 265 | 29729 | 3.1 | III | 6.74 | | | 30890 | 14391 | | | |
| | 236 | 33435 | 3.0 | III | 7.58 | | | 30875 | 14837 | | | |
| | 217 | 36346 | 3.3 | III | 8.24 | | | 30861 | 15271 | | | |
| | 194 | 40580 | 3.2 | III | 9.20 | | | 30841 | 15692 | | | |
| | 171 | 45962 | 3.3 | III | 10.42 | | | 30809 | 16232 | | | |
| | 154 | 51299 | 3.2 | III | 11.63 | | | 30773 | 16677 | | | |
| | 132 | 59547 | 3.1 | III | 13.50 | | | 30710 | 17305 | | | |
| | 118 | 67002 | 3.0 | III | 15.19 | | | 30647 | 17813 | | | |
| | 98 | 80455 | 2.8 | III | 18.24 | | | 30512 | 18599 | | | |
| | 85 | 92629 | 2.9 | III | 21.00 | | | 30368 | 19145 | **SK 10382 - 280M/4** | 4181 | 366 |
| | 76 | 104009 | 2.7 | III | 23.58 | | | 30213 | 19674 | SK 10382 - 280MH/4 | | |
| | 66 | 119888 | 2.4 | III | 27.18 | | | 29968 | 20284 | | | |
| | 60 | 131401 | 2.4 | III | 29.79 | | | 29765 | 20709 | | | |
| | 52 | 151515 | 2.0 | III | 34.35 | | | 29363 | 21247 | | | |
| | 44 | 180847 | 1.7 | II | 41.00 | | | 28663 | 21938 | | | |
| | 37 | 211503 | 1.5 | II | 47.95 | | | 27774 | 22473 | | | |
| | 31 | 250363 | 1.2 | I | 56.76 | | | 26393 | 23020 | | | |
| | 27 | 288650 | 1.1 | I | 65.44 | | | 24707 | 23393 | | | |
| | 25 | 320717 | 1.0 | I | 72.71 | | | 22997 | 23621 | | | |
| | 20 | 402936 | 0.8 | * | 91.35 | | | 16756 | 23924 | | | |
| | 233 | 33832 | 3.6 | III | 7.67 | | | 33379 | 13748 | **SK 11282 - 280M/4** | 5859 | 368 |
| | 208 | 37846 | 3.5 | III | 8.58 | | | 33957 | 14173 | SK 11282 - 280MH/4 | | |
| | 178 | 44330 | 3.4 | III | 10.05 | | | 33926 | 14753 | | | |
| | 149 | 52754 | 3.2 | III | 11.96 | | | 33878 | 15428 | | | |
| | 127 | 61929 | 3.1 | III | 14.04 | | | 33815 | 16061 | | | |
| | 109 | 72030 | 3.6 | III | 16.33 | | | 33737 | 16853 | | | |
| | 98 | 80587 | 3.5 | III | 18.27 | | | 33658 | 17318 | | | |
| | 83 | 94482 | 3.4 | III | 21.42 | | | 33514 | 18027 | | | |
| | 70 | 112346 | 3.2 | III | 25.47 | | | 33293 | 18731 | | | |
| | 60 | 131974 | 2.8 | III | 29.92 | | | 33005 | 19436 | | | |
| | 51 | 153720 | 2.4 | III | 34.85 | | | 32630 | 20070 | | | |

(AGMA Class I = $f_B$ 1.0 - 1.39 II = $f_B$ 1.4 - 1.99 III = $f_B$ ≥ 2.0 * = $f_B$ < 1.0) **(Model Type in blue is an Energy Efficient motor)**


Send Quote Requests to info@automatedpt.com
Call +1(800)985-6929 To Order or Order Online At Nordgearmotors.com

DRIVESYSTEMS

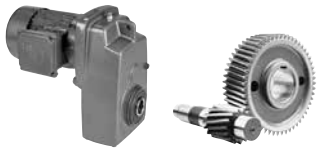

# 125 hp, 150 hp Gearmotors



| Motor Power $P_n$ [hp] | Output Speed $n_2$ [rpm] | Output Torque $T_2$ [lb-in] | Service Factor $f_B$ | AGMA Class | Gear Ratio $i_{tot}$ | Standard Bearings $F_{RN}$ OHL [lb] | Standard Bearings $F_{AN}$ Thrust [lb] | Heavy Duty Bearings (VL) $F_{RVL}$ OHL [lb] | Heavy Duty Bearings (VL) $F_{AVL}$ Thrust [lb] | Model Type | Weight [lb] | Dim. Page |
|---|---|---|---|---|---|---|---|---|---|---|---|---|
| **125** | 56 | 140973 | 3.4 | III | 31.96 | | | 32857 | 19753 | **SK 11382 - 280M/4** | 6028 | 370 |
| | 47 | 168541 | 3.2 | III | 38.21 | | | 32335 | 20459 | **SK 11382 - 280MH/4** | | |
| | 38 | 205725 | 2.6 | III | 46.64 | | | 31466 | 21263 | | | |
| | 33 | 239336 | 2.2 | III | 54.26 | | | 30506 | 21886 | | | |
| | 28 | 279828 | 1.9 | II | 63.44 | | | 29099 | 22381 | | | |
| | 23 | 339684 | 1.6 | II | 77.01 | | | 26440 | 23002 | | | |
| | 19 | 406112 | 1.4 | II | 92.07 | | | 22401 | 23486 | | | |
| | 16 | 495697 | 1.2 | I | 112.38 | | | 13415 | 23787 | | | |
| | 14 | 576638 | 1.1 | I | 130.73 | | | | 23981 | | | |
| | 12 | 674295 | 0.9 | * | 152.87 | | | | 23864 | | | |
| | 10 | 758499 | 0.8 | * | 171.96 | | | | 23713 | | | |
| | 26 | 304882 | 2.6 | III | 69.12 | | | 28080 | 20394 | **SK 12382 - 280M/4** | 6028 | 372 |
| | 22 | 364561 | 2.2 | III | 82.65 | | | 25085 | 20459 | **SK 12382 - 280MH/4** | | |
| | 18 | 444972 | 1.8 | II | 100.88 | | | 19235 | 20363 | | | |
| | 15 | 517620 | 1.5 | II | 117.35 | | | 9563 | 19973 | | | |
| | 13 | 605264 | 1.3 | I | 137.22 | | | | 19375 | | | |
| | 12 | 680823 | 1.2 | I | 154.35 | | | | 18794 | | | |
| **150** | 335 | 28234 | 2.6 | III | 5.34 | 3375 | 4761 | 8231 | 10805 | **SK 9282 - 315S/4** | 3301 | 360 |
| | 309 | 30562 | 2.6 | III | 5.78 | 3391 | 4860 | 8361 | 10944 | **SK 9282 - 315SH/4** | | |
| | 253 | 37330 | 2.4 | III | 7.06 | 3386 | 5117 | 8696 | 11374 | | | |
| | 207 | 45684 | 2.2 | III | 8.64 | 3314 | 5378 | 9029 | 11725 | | | |
| | 176 | 53827 | 1.8 | II | 10.18 | 3188 | 5544 | 9268 | 11990 | | | |
| | 149 | 63503 | 1.9 | II | 12.01 | 3260 | 5864 | 9664 | 12463 | | | |
| | 122 | 77727 | 1.7 | II | 14.70 | 2993 | 6026 | 9918 | 12704 | | | |
| | 103 | 91633 | 1.5 | II | 17.33 | 2655 | 6134 | 10076 | 12848 | | | |
| | 89 | 106438 | 1.3 | I | 20.13 | 2261 | 6143 | 10163 | 12868 | | | |
| | 77 | 122407 | 1.2 | I | 23.15 | 2061 | 6323 | 10404 | 13118 | | | |
| | 66 | 142182 | 1.1 | I | 26.89 | 1451 | 6262 | 10424 | 13012 | | | |
| | 58 | 162803 | 1.0 | I | 30.79 | 772 | 6134 | 10325 | 12848 | | | |
| | 344 | 27495 | 2.8 | III | 5.20 | | | 29075 | 13304 | **SK 10282 - 315S/4** | 4500 | 364 |
| | 308 | 30668 | 2.7 | III | 5.80 | | | 29815 | 13694 | **SK 10282 - 315SH/4** | | |
| | 265 | 35638 | 2.6 | III | 6.74 | | | 30866 | 14231 | | | |
| | 236 | 40080 | 2.5 | III | 7.58 | | | 30843 | 14672 | | | |
| | 217 | 43569 | 2.8 | III | 8.24 | | | 30823 | 15075 | | | |
| | 194 | 48645 | 2.7 | III | 9.20 | | | 30791 | 15494 | | | |
| | 172 | 55096 | 2.8 | III | 10.42 | | | 30746 | 16022 | | | |
| | 154 | 61494 | 2.7 | III | 11.63 | | | 30695 | 16441 | | | |
| | 132 | 71382 | 2.6 | III | 13.50 | | | 30605 | 17028 | | | |
| | 118 | 80318 | 2.5 | III | 15.19 | | | 30512 | 17501 | | | |
| | 98 | 96445 | 2.4 | III | 18.24 | | | 30317 | 18216 | | | |
| | 85 | 111038 | 2.4 | III | 21.00 | | | 30110 | 18720 | **SK 10382 - 315S/4** | 4556 | 366 |
| | 76 | 124680 | 2.3 | III | 23.58 | | | 29885 | 19145 | **SK 10382 - 315SH/4** | | |
| | 66 | 143715 | 2.0 | III | 27.18 | | | 29527 | 19674 | | | |
| | 60 | 157516 | 2.0 | III | 29.79 | | | 29232 | 20088 | | | |
| | 52 | 181627 | 1.7 | II | 34.35 | | | 28643 | 20545 | | | |
| | 44 | 216789 | 1.4 | II | 41.00 | | | 27603 | 21146 | | | |
| | 37 | 253538 | 1.2 | I | 47.95 | | | 26264 | 21557 | | | |
| | 32 | 300121 | 1.0 | I | 56.76 | | | 24129 | 21870 | | | |
| | 27 | 346017 | 0.9 | * | 65.44 | | | 21413 | 22082 | | | |
| | 25 | 384457 | 0.9 | * | 72.71 | | | 18479 | 22151 | | | |

(AGMA Class I = $f_B$ 1.0 - 1.39 II = $f_B$ 1.4 - 1.99 III = $f_B$ ≥ 2.0 * = $f_B$ < 1.0) **(Model Type in blue is an Energy Efficient motor)**


Send Quote Requests to info@automatedpt.com
Call +1(800)985-6929 To Order or Order Online At Nordgearmotors.com

# 150 hp, 175 hp Gearmotors



DRIVESYSTEMS

GEARMOTORS

| Motor Power $P_n$ [hp] | Output Speed $n_2$ [rpm] | Output Torque $T_2$ [lb-in] | Service Factor $f_B$ | AGMA Class | Gear Ratio $i_{tot}$ | Standard Bearings $F_{RN}$ OHL [lb] | Standard Bearings $F_{AN}$ Thrust [lb] | Heavy Duty Bearings (VL) $F_{RVL}$ OHL [lb] | Heavy Duty Bearings (VL) $F_{AVL}$ Thrust [lb] | Model Type | Weight [lb] | Dim. Page |
|---|---|---|---|---|---|---|---|---|---|---|---|---|
| **150** | 233 | 40555 | 3.0 | III | 7.67 | | | 32978 | 13617 | **SK 11282 - 315S/4** | 6234 | 368 |
| | 208 | 45367 | 3.0 | III | 8.58 | | | 33921 | 14015 | SK 11282 - 315SH/4 | | |
| | 178 | 53140 | 2.8 | III | 10.05 | | | 33876 | 14589 | | | |
| | 149 | 63239 | 2.7 | III | 11.96 | | | 33806 | 15233 | | | |
| | 127 | 74237 | 2.5 | III | 14.04 | | | 33716 | 15831 | | | |
| | 109 | 86346 | 3.0 | III | 16.33 | | | 33602 | 16639 | | | |
| | 98 | 96603 | 3.0 | III | 18.27 | | | 33489 | 17042 | | | |
| | 83 | 113259 | 2.8 | III | 21.42 | | | 33282 | 17683 | | | |
| | 70 | 134674 | 2.7 | III | 25.47 | | | 32963 | 18347 | | | |
| | 60 | 158203 | 2.3 | III | 29.92 | | | 32544 | 18977 | | | |
| | 51 | 184271 | 2.0 | III | 34.85 | | | 31993 | 19562 | | | |
| | 56 | 168990 | 2.8 | III | 31.96 | | | 32326 | 19220 | **SK 11382 - 315S/4** | 6403 | 370 |
| | 47 | 202037 | 2.6 | III | 38.21 | | | 31563 | 19877 | SK 11382 - 315SH/4 | | |
| | 38 | 246611 | 2.2 | III | 46.64 | | | 30274 | 20592 | | | |
| | 33 | 286902 | 1.9 | II | 54.26 | | | 28825 | 21026 | | | |
| | 28 | 335442 | 1.6 | II | 63.44 | | | 26656 | 21434 | | | |
| | 23 | 407194 | 1.4 | II | 77.01 | | | 22322 | 21886 | | | |
| | 19 | 486824 | 1.2 | I | 92.07 | | | 14652 | 22097 | | | |
| | 16 | 594214 | 1.0 | I | 112.38 | | | | 22097 | | | |
| | 14 | 691241 | 0.9 | * | 130.73 | | | | 21920 | | | |
| | 12 | 808307 | 0.8 | * | 152.87 | | | | 21537 | | | |
| | 26 | 365475 | 2.2 | III | 69.12 | | | 25034 | 18884 | **SK 12382 - 315S/4** | 6403 | 372 |
| | 22 | 437015 | 1.8 | II | 82.65 | | | 19949 | 18673 | SK 12382 - 315SH/4 | | |
| | 18 | 533407 | 1.5 | II | 100.88 | | | 5036 | 18113 | | | |
| | 15 | 620493 | 1.3 | I | 117.35 | | | | 17487 | | | |
| | 13 | 725557 | 1.1 | I | 137.22 | | | | 16452 | | | |
| | 12 | 816132 | 1.0 | I | 154.35 | | | | 15480 | | | |
| **175** | 335 | 32903 | 2.2 | III | 5.34 | 3128 | 4568 | 8071 | 10514 | **SK 9282 - 315M/4** | 3477 | 360 |
| | 310 | 35615 | 2.2 | III | 5.78 | 3125 | 4662 | 8172 | 10649 | SK 9282 - 315MH/4 | | |
| | 254 | 43502 | 2.1 | III | 7.06 | 3056 | 4860 | 8471 | 10996 | | | |
| | 207 | 53238 | 1.9 | II | 8.64 | 2896 | 5060 | 8750 | 11300 | | | |
| | 176 | 62727 | 1.5 | II | 10.18 | 2716 | 5159 | 8948 | 11484 | | | |
| | 149 | 74003 | 1.7 | II | 12.01 | 2734 | 5438 | 9293 | 11914 | | | |
| | 122 | 90578 | 1.4 | II | 14.70 | 2304 | 5544 | 9484 | 12029 | | | |
| | 103 | 106783 | 1.3 | I | 17.33 | 1845 | 5508 | 9545 | 12029 | | | |
| | 89 | 124036 | 1.1 | I | 20.13 | 1303 | 5429 | 9536 | 11954 | | | |
| | 77 | 142645 | 1.0 | I | 23.15 | 1006 | 5544 | 9711 | 12107 | | | |
| | 67 | 165689 | 0.9 | * | 26.89 | 189 | 5317 | 9608 | 11840 | | | |
| | 344 | 32041 | 3.2 | III | 5.20 | | | 28683 | 13199 | **SK 10282 - 315M/4** | 4677 | 364 |
| | 309 | 35738 | 3.0 | III | 5.80 | | | 29462 | 13563 | SK 10282 - 315MH/4 | | |
| | 266 | 41530 | 2.9 | III | 6.74 | | | 30539 | 14074 | | | |
| | 236 | 46706 | 2.8 | III | 7.58 | | | 30803 | 14508 | | | |
| | 217 | 50773 | 3.2 | III | 8.24 | | | 30778 | 14909 | | | |
| | 195 | 56688 | 3.0 | III | 9.20 | | | 30733 | 15296 | | | |
| | 172 | 64205 | 3.2 | III | 10.42 | | | 30672 | 15793 | | | |
| | 154 | 71661 | 3.0 | III | 11.63 | | | 30602 | 16232 | | | |
| | 133 | 83184 | 2.9 | III | 13.50 | | | 30481 | 16760 | | | |
| | 118 | 93597 | 2.8 | III | 15.19 | | | 30355 | 17195 | | | |
| | 98 | 112390 | 2.5 | III | 18.24 | | | 30087 | 17870 | | | |

(AGMA Class I = $f_B$ 1.0 - 1.39 II = $f_B$ 1.4 - 1.99 III = $f_B$ ≥ 2.0 * = $f_B$ < 1.0) **(Model Type in blue is an Energy Efficient motor)**


Send Quote Requests to info@automatedpt.com
Call +1(800)985-6929 To Order or Order Online At Nordgearmotors.com

DRIVESYSTEMS



# 175 hp, 200 hp Gearmotors



| Motor Power $P_n$ [hp] | Output Speed $n_2$ [rpm] | Output Torque $T_2$ [lb-in] | Service Factor $f_B$ | AGMA Class | Gear Ratio $i_{tot}$ | Standard Bearings $F_{RN}$ OHL [lb] | Standard Bearings $F_{AN}$ Thrust [lb] | Heavy Duty Bearings (VL) $F_{RVL}$ OHL [lb] | Heavy Duty Bearings (VL) $F_{AVL}$ Thrust [lb] | Model Type | Weight [lb] | Dim. Page |
|---|---|---|---|---|---|---|---|---|---|---|---|---|
| **175** | 85 | 129397 | 1.8 | II | 21.00 | | | 29801 | 18275 | **SK 10382 - 315M/4** | 4732 | 366 |
| | 76 | 145294 | 2.0 | III | 23.58 | | | 29493 | 18659 | SK 10382 - 315MH/4 | | |
| | 66 | 167476 | 1.7 | II | 27.18 | | | 29000 | 19085 | | | |
| | 60 | 183559 | 1.7 | II | 29.79 | | | 28591 | 19485 | | | |
| | 52 | 211656 | 1.5 | II | 34.35 | | | 27770 | 19897 | | | |
| | 44 | 252632 | 1.2 | I | 41.00 | | | 26300 | 20284 | | | |
| | 37 | 295456 | 1.0 | I | 47.95 | | | 24370 | 20545 | | | |
| | 32 | 349741 | 0.9 | * | 56.76 | | | 21161 | 20709 | | | |
| | 27 | 403225 | 0.8 | * | 65.44 | | | 16727 | 20743 | | | |
| | 233 | 47261 | 3.4 | III | 7.67 | | | 32578 | 13487 | **SK 11282 - 315M/4** | 6410 | 368 |
| | 209 | 52868 | 3.3 | III | 8.58 | | | 33552 | 13858 | SK 11282 - 315MH/4 | | |
| | 178 | 61926 | 3.1 | III | 10.05 | | | 33815 | 14425 | | | |
| | 150 | 73695 | 2.9 | III | 11.96 | | | 33721 | 15017 | | | |
| | 127 | 86511 | 2.7 | III | 14.04 | | | 33599 | 15579 | | | |
| | 110 | 100621 | 3.4 | III | 16.33 | | | 33444 | 16346 | | | |
| | 98 | 112575 | 3.3 | III | 18.27 | | | 33291 | 16799 | | | |
| | 84 | 131985 | 2.8 | III | 21.42 | | | 33005 | 17345 | | | |
| | 70 | 156940 | 2.4 | III | 25.47 | | | 32567 | 17969 | | | |
| | 60 | 184360 | 2.0 | III | 29.92 | | | 31991 | 18524 | | | |
| | 56 | 196930 | 2.7 | III | 31.96 | | | 31691 | 18731 | **SK 11382 - 315M/4** | 6580 | 370 |
| | 47 | 235440 | 2.3 | III | 38.21 | | | 30625 | 19280 | SK 11382 - 315MH/4 | | |
| | 38 | 287384 | 1.8 | II | 46.64 | | | 28805 | 19845 | | | |
| | 33 | 334337 | 1.6 | II | 54.26 | | | 26710 | 20201 | | | |
| | 28 | 390901 | 1.4 | II | 63.44 | | | 23454 | 20459 | | | |
| | 23 | 474516 | 1.2 | I | 77.01 | | | 16180 | 20657 | | | |
| | 19 | 567312 | 1.0 | I | 92.07 | | | | 20657 | | | |
| | 16 | 692458 | 0.9 | * | 112.38 | | | | 20394 | | | |
| | 14 | 805526 | 0.8 | * | 130.73 | | | | 19973 | | | |
| | 26 | 425900 | 1.9 | II | 69.12 | | | 20885 | 17372 | **SK 12382 - 315M/4** | 6580 | 372 |
| | 22 | 509269 | 1.6 | II | 82.65 | | | 11207 | 16880 | SK 12382 - 315MH/4 | | |
| | 18 | 621597 | 1.3 | I | 100.88 | | | | 15959 | | | |
| | 15 | 723081 | 1.1 | I | 117.35 | | | | 14873 | | | |
| | 13 | 845515 | 0.9 | * | 137.22 | | | | 13444 | | | |
| **200** | 335 | 37604 | 2.0 | III | 5.34 | 2885 | 4388 | 7900 | 10265 | **SK 9282 - 315MA/4** | 3808 | 360 |
| | 310 | 40702 | 1.9 | II | 5.78 | 2851 | 4444 | 7985 | 10379 | SK 9282 - 315MH/4 | | |
| | 254 | 49716 | 1.8 | II | 7.06 | 2709 | 4617 | 8249 | 10649 | | | |
| | 207 | 60842 | 1.6 | II | 8.64 | 2480 | 4730 | 8476 | 10874 | | | |
| | 176 | 71686 | 1.3 | I | 10.18 | 2212 | 4806 | 8611 | 10978 | | | |
| | 149 | 84573 | 1.4 | II | 12.01 | 2174 | 5027 | 8937 | 11374 | | | |
| | 122 | 103515 | 1.3 | I | 14.70 | 1620 | 5004 | 9005 | 11374 | | | |
| | 103 | 122036 | 1.1 | I | 17.33 | 992 | 4907 | 9023 | 11248 | | | |
| | 89 | 141753 | 1.0 | I | 20.13 | 297 | 4723 | 8894 | 11032 | | | |
| | 77 | 163019 | 0.9 | * | 23.15 | | | 8993 | 11086 | | | |
| | 67 | 189356 | 0.8 | * | 26.89 | | | 8739 | 10701 | | | |
| | 344 | 36618 | 2.8 | III | 5.20 | | | 28343 | 13070 | **SK 10282 - 315MA/4** | 5008 | 364 |
| | 309 | 40843 | 2.7 | III | 5.80 | | | 29061 | 13433 | SK 10282 - 315MH/4 | | |
| | 266 | 47462 | 2.6 | III | 6.74 | | | 30065 | 13939 | | | |
| | 236 | 53377 | 2.4 | III | 7.58 | | | 30758 | 14321 | | | |
| | 217 | 58025 | 2.8 | III | 8.24 | | | 30724 | 14742 | | | |
| | 195 | 64785 | 2.7 | III | 9.20 | | | 30668 | 15125 | | | |
| | 172 | 73376 | 2.8 | III | 10.42 | | | 30587 | 15593 | | | |
| | 154 | 81897 | 2.7 | III | 11.63 | | | 30497 | 15973 | | | |
| | 133 | 95065 | 2.6 | III | 13.5 | | | 30337 | 16493 | | | |
| | 118 | 106966 | 2.4 | III | 15.19 | | | 30170 | 16895 | | | |
| | 98 | 128444 | 2.2 | III | 18.24 | | | 29819 | 17501 | | | |

(AGMA Class I = $f_B$ 1.0 - 1.39 II = $f_B$ 1.4 - 1.99 III = $f_B$ ≥ 2.0 * = $f_B$ < 1.0) **(Model Type in blue is an Energy Efficient motor)**


Send Quote Requests to info@automatedpt.com
Call +1(800)985-6929 To Order or Order Online At Nordgearmotors.com

# 200 hp Gearmotors



DRIVESYSTEMS

GEARMOTORS

| Motor Power $P_n$ [hp] | Output Speed $n_2$ [rpm] | Output Torque $T_2$ [lb-in] | Service Factor $f_B$ | AGMA Class | Gear Ratio $i_{tot}$ | Standard Bearings $F_{RN}$ OHL [lb] | Standard Bearings $F_{AN}$ Thrust [lb] | Heavy Duty Bearings (VL) $F_{RVL}$ OHL [lb] | Heavy Duty Bearings (VL) $F_{AVL}$ Thrust [lb] | Model Type | Weight [lb] | Dim. Page |
|---|---|---|---|---|---|---|---|---|---|---|---|---|
| 200 | 85 | 147879 | 1.6 | II | 21.00 | | | 29441 | 17840 | **SK 10382 - 315MA/4** | 5063 | 366 |
| | 76 | 166047 | 1.8 | II | 23.58 | | | 29034 | 18158 | **SK 10382 - 315MH/4** | | |
| | 66 | 191398 | 1.5 | II | 27.18 | | | 28375 | 18540 | | | |
| | 60 | 209777 | 1.5 | II | 29.79 | | | 27828 | 18900 | | | |
| | 52 | 241888 | 1.3 | I | 34.35 | | | 26719 | 19175 | | | |
| | 44 | 288717 | 1.1 | I | 41.00 | | | 24703 | 19485 | | | |
| | 37 | 337657 | 0.9 | * | 47.95 | | | 21965 | 19580 | | | |
| | 32 | 399696 | 0.8 | * | 56.76 | | | 17078 | 19580 | | | |
| | 233 | 54011 | 3.0 | III | 7.67 | | | 32227 | 13336 | **SK 11282 - 315MA/4** | 6741 | 368 |
| | 209 | 60419 | 2.9 | III | 8.58 | | | 33073 | 13705 | **SK 11282 - 315MH/4** | | |
| | 178 | 70771 | 2.7 | III | 10.05 | | | 33746 | 14240 | | | |
| | 150 | 84221 | 2.6 | III | 11.96 | | | 33624 | 14801 | | | |
| | 127 | 98868 | 2.4 | III | 14.04 | | | 33464 | 15332 | | | |
| | 110 | 114994 | 3.0 | III | 16.33 | | | 33257 | 16139 | | | |
| | 98 | 128655 | 2.9 | III | 18.27 | | | 33057 | 16479 | | | |
| | 84 | 150837 | 2.5 | III | 21.42 | | | 32681 | 17015 | | | |
| | 70 | 179356 | 2.1 | III | 25.47 | | | 32103 | 17570 | | | |
| | 60 | 210693 | 1.8 | II | 29.92 | | | 31336 | 18056 | | | |
| | 56 | 225058 | 2.4 | III | 31.96 | | | 30935 | 18259 | **SK 11382 - 315MA/4** | 6910 | 370 |
| | 47 | 269070 | 2.0 | III | 38.21 | | | 29502 | 18731 | **SK 11382 - 315MH/4** | | |
| | 38 | 328433 | 1.6 | II | 46.64 | | | 27000 | 19159 | | | |
| | 33 | 382092 | 1.4 | II | 54.26 | | | 24026 | 19375 | | | |
| | 28 | 446736 | 1.2 | I | 63.44 | | | 19071 | 19562 | | | |
| | 23 | 542294 | 1.0 | I | 77.01 | | | | 19562 | | | |
| | 19 | 648345 | 0.9 | * | 92.07 | | | | 19280 | | | |
| | 16 | 791365 | 0.8 | * | 112.38 | | | | 18702 | | | |
| | 26 | 486734 | 1.6 | II | 69.12 | | | 14663 | 15959 | **SK 12382 - 315MA/4** | 6910 | 372 |
| | 22 | 582010 | 1.4 | II | 82.65 | | | | 15086 | **SK 12382 - 315MH/4** | | |
| | 18 | 710383 | 1.1 | I | 100.88 | | | | 13725 | | | |
| | 15 | 826363 | 1.0 | I | 117.35 | | | | 12389 | | | |
| | 13 | 966285 | 0.8 | * | 137.22 | | | | 10535 | | | |

(AGMA Class I = $f_B$ 1.0 - 1.39 II = $f_B$ 1.4 - 1.99 III = $f_B$ ≥ 2.0 * = $f_B$ < 1.0) **(Model Type in blue is an Energy Efficient motor)**


Send Quote Requests to info@automatedpt.com
Call +1(800)985-6929 To Order or Order Online At Nordgearmotors.com

Send Quote Requests to info@automatedpt.com Call +1(800)985-6929 To Order or Order Online At Nordgearmotors.com

# Clincher™ Shaft Mount Reducers Selection & Combinations

## Selection

- SK 0182NB
- SK 0282NB
- SK 1382NB
- SK 1282/02
- SK 1282
- SK 2282
- SK 2382
- SK 2282/02
- SK 3282
- SK 3382
- SK 3282/12
- SK 4282
- SK 4382
- SK 4282/12
- SK 5282
- SK 5382
- SK 5282/12
- SK 6282
- SK 6382
- SK 6282/22
- SK 7282
- SK 7382
- SK 7382/22
- SK 7382/32
- SK 8282
- SK 8382
- SK 8382/32
- SK 8382/42
- SK 9282
- SK 9382
- SK 9382/42
- SK 9382/52
- SK 10282
- SK 10382
- SK 10382/52
- SK 11282
- SK 11382
- SK 11382/52
- SK 12382

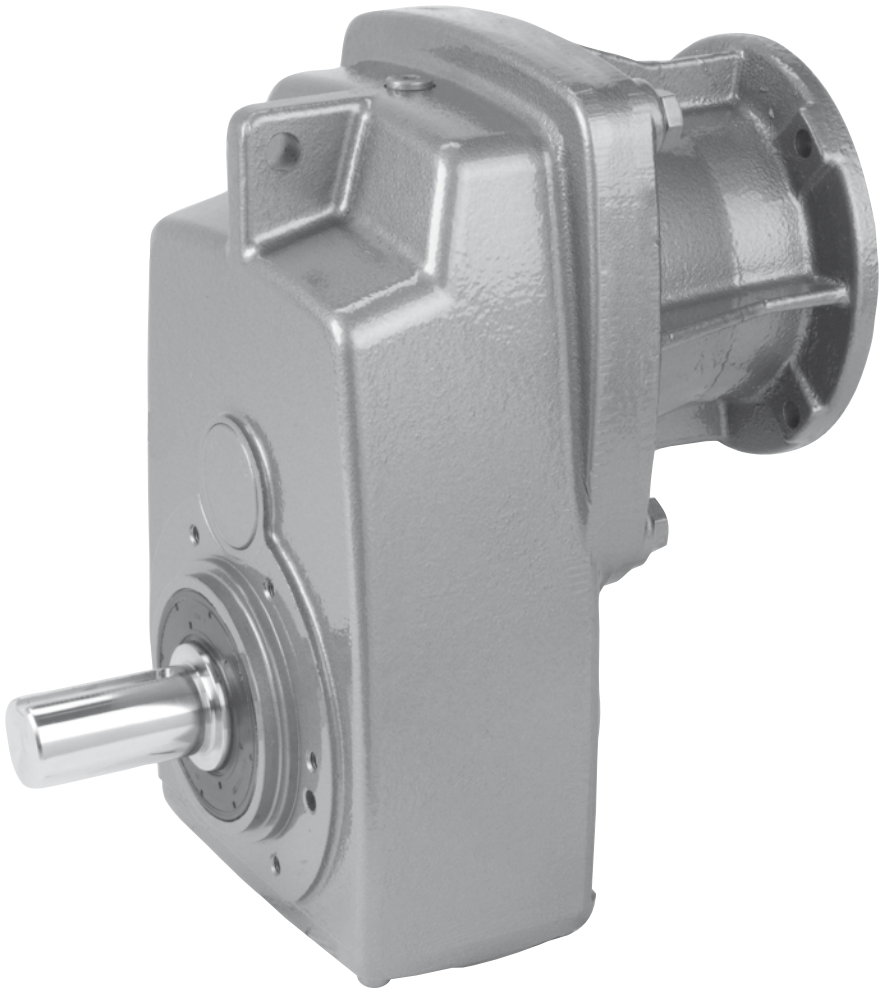

NORD® DRIVESYSTEMS

www.nord.com

UNICASE™

| Model Type | Gear Ratio $i_{tot}$ | Output Speed $n_2$ 1750 rpm [rpm] | Output Torque* $T_{2\,max}$ [lb-in] | Maximum input power Solid input shafts type Input Speed 1750 rpm [hp] | 1150 rpm [hp] | 875 rpm [hp] |
|---|---|---|---|---|---|---|
| SK 2282 | 4.51 | 388 | 1646 | 5.00 | 3.30 | 2.50 |
| | 5.72 | 306 | 1876 | 5.00 | 3.30 | 2.50 |
| | 6.43 | 272 | 2000 | 5.00 | 3.30 | 2.50 |
| | 7.48 | 234 | 2151 | 5.00 | 3.30 | 2.50 |
| | 8.37 | 209 | 2266 | 5.00 | 3.30 | 2.50 |
| | 9.03 | 194 | 2965 | 5.00 | 3.30 | 2.50 |
| | 10.15 | 172 | 3151 | 5.00 | 3.30 | 2.50 |
| | 11.81 | 148 | 3398 | 5.00 | 3.30 | 2.50 |
| | 13.23 | 132 | 3584 | 5.00 | 3.30 | 2.50 |
| | 16.53 | 106 | 4168 | 5.00 | 3.30 | 2.50 |
| | 18.51 | 95 | 4301 | 5.00 | 3.30 | 2.50 |
| | 21.90 | 80 | 4248 | 5.00 | 3.30 | 2.50 |
| | 23.96 | 73 | 3850 | 4.46 | 2.94 | 2.23 |
| | 24.97 | 70 | 4337 | 4.82 | 3.18 | 2.41 |
| | 26.83 | 65 | 3885 | 4.01 | 2.64 | 2.00 |
| | 29.65 | 59 | 4425 | 4.14 | 2.73 | 2.07 |
| | **31.23** | 56 | 3938 | 3.50 | 2.31 | 1.75 |
| | **36.54** | 48 | 4434 | 3.38 | 2.23 | 1.69 |
| | 37.18 | 47 | 4071 | 3.04 | 2.00 | 1.52 |
| | **43.71** | 40 | 4983 | 3.16 | 2.09 | 1.59 |



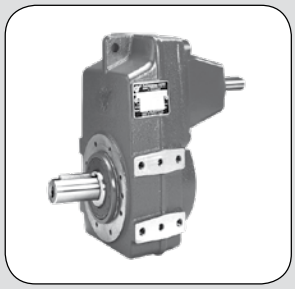

Send Quote Requests to info@automatedpt.com
Call +1(800)985-6929 To Order or Order Online At Nordgearmotors.com

# SK 0182NB, SK 0282NB
# NEMA-C + W
# Ratings & Combinations

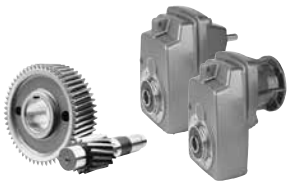

DRIVESYSTEMS



| Model Type | Gear Ratio | Output Speed | Output Torque* | Maximum input power◈ Solid input shafts type "W" | | | | NEMA C-Face* Available Combinations | | | | | | | |
|---|---|---|---|---|---|---|---|---|---|---|---|---|---|---|---|
| | | | | Input Speed | | | | | | | | | | | |
| | $i_{tot}$ | $n_2$ 1750 rpm | $T_{2\,max}$ | 1750 rpm | 1150 rpm | 875 rpm | 580 rpm | | | | | | | | |
| | | [rpm] | [lb-in] | [hp] | [hp] | [hp] | [hp] | 56C | 140TC | 180TC | 210TC | 250TC | 280TC | 320TC | 360TC |
| **SK 0182NB** | 4.24 | 413 | 646 | 1.50 | 0.99 | 0.75 | 0.50 | X | X* | | | | | | |
| | 5.34 | 328 | 814 | 1.50 | 0.99 | 0.75 | 0.50 | X | X* | | | | | | |
| | 6.35 | 276 | 974 | 1.50 | 0.99 | 0.75 | 0.50 | X | X* | | | | | | |
| | 7.26 | 241 | 974 | 1.50 | 0.99 | 0.75 | 0.50 | X | X* | | | | | | |
| | 8.64 | 203 | 974 | 1.50 | 0.99 | 0.75 | 0.50 | X | X* | | | | | | |
| | 9.49 | 184 | 974 | 1.50 | 0.99 | 0.75 | 0.50 | X | X* | | | | | | |
| | 11.66 | 150 | 974 | 1.50 | 0.99 | 0.75 | 0.50 | X | X* | | | | | | |
| | 13.84 | 126 | 974 | 1.50 | 0.99 | 0.75 | 0.50 | X | X* | | | | | | |
| | **14.92** | 117 | 664 | 1.23 | 0.81 | 0.62 | 0.41 | X | X* | | | | | | |
| | **16.53** | 106 | 885 | 1.49 | 0.98 | 0.74 | 0.49 | X | X* | | | | | | |
| | **18.79** | 93 | 841 | 1.24 | 0.82 | 0.62 | 0.41 | X | X* | | | | | | |
| | **22.35** | 78 | 965 | 1.19 | 0.79 | 0.60 | 0.39 | X | X* | | | | | | |
| | **24.55** | 71 | 1027 | 1.16 | 0.76 | 0.58 | 0.38 | X | X* | | | | | | |
| | **29.13** | 60 | 974 | 0.93 | 0.61 | 0.46 | 0.31 | X* | X* | | | | | | |
| | **31.81** | 55 | 841 | 0.73 | 0.48 | 0.37 | 0.24 | X* | X* | | | | | | |
| | **34.80** | 50 | 912 | 0.72 | 0.48 | 0.36 | 0.24 | X* | X* | | | | | | |
| | **37.73** | 46 | 885 | 0.65 | 0.43 | 0.32 | 0.21 | X* | X* | | | | | | |
| | **41.85** | 42 | 752 | 0.50 | 0.33 | 0.25 | 0.17 | X* | | | | | | | |
| | **49.65** | 35 | 885 | 0.49 | 0.32 | 0.25 | 0.16 | X* | | | | | | | |
| | **59.33** | 29 | 974 | 0.45 | 0.30 | 0.22 | 0.15 | X* | | | | | | | |
| | **81.71** | 21 | 575 | 0.19 | 0.13 | 0.10 | 0.06 | X* | | | | | | | |
| **SK 0282NB** | 4.03 | 434 | 912 | 2.00 | 1.32 | 1.00 | 0.66 | X | X | | | | | | |
| | 4.66 | 376 | 974 | 2.00 | 1.32 | 1.00 | 0.66 | X | X | | | | | | |
| | 5.17 | 338 | 1009 | 2.00 | 1.32 | 1.00 | 0.66 | X | X | | | | | | |
| | 5.99 | 292 | 1071 | 2.00 | 1.32 | 1.00 | 0.66 | X | X | | | | | | |
| | 6.44 | 272 | 1089 | 2.00 | 1.32 | 1.00 | 0.66 | X | X | | | | | | |
| | 7.45 | 235 | 1159 | 2.00 | 1.32 | 1.00 | 0.66 | X | X | | | | | | |
| | 8.80 | 199 | 1221 | 2.00 | 1.32 | 1.00 | 0.66 | X | X | | | | | | |
| | 9.64 | 182 | 1248 | 2.00 | 1.32 | 1.00 | 0.66 | X | X | | | | | | |
| | 10.98 | 159 | 1345 | 2.00 | 1.32 | 1.00 | 0.66 | X | X | | | | | | |
| | 11.25 | 156 | 1239 | 2.00 | 1.32 | 1.00 | 0.66 | X | X | | | | | | |
| | 12.98 | 135 | 1416 | 2.00 | 1.32 | 1.00 | 0.66 | X | X | | | | | | |
| | 14.21 | 123 | 1443 | 2.00 | 1.32 | 1.00 | 0.66 | X | X | | | | | | |
| | 16.58 | 106 | 1239 | 2.00 | 1.32 | 1.00 | 0.66 | X | X | | | | | | |
| | 17.61 | 99 | 1142 | 1.79 | 1.18 | 0.90 | 0.59 | X | X* | | | | | | |
| | 19.95 | 88 | 1142 | 1.59 | 1.05 | 0.80 | 0.53 | X | X* | | | | | | |
| | 21.57 | 81 | 1239 | 1.59 | 1.05 | 0.80 | 0.53 | X | X* | | | | | | |
| | 22.70 | 77 | 1142 | 1.39 | 0.92 | 0.70 | 0.46 | X | X* | | | | | | |
| | 25.96 | 67 | 1142 | 1.21 | 0.80 | 0.61 | 0.40 | X | X* | | | | | | |
| | 30.03 | 58 | 1142 | 1.05 | 0.69 | 0.53 | 0.35 | X | X* | | | | | | |
| | **34.16** | 51 | 1354 | 1.10 | 0.72 | 0.55 | 0.36 | X | X* | | | | | | |
| | **40.38** | 43 | 1460 | 1.00 | 0.66 | 0.50 | 0.33 | X | X* | | | | | | |
| | **44.22** | 40 | 1451 | 0.92 | 0.61 | 0.46 | 0.30 | X* | X* | | | | | | |
| | **51.64** | 34 | 1292 | 0.70 | 0.46 | 0.35 | 0.23 | X* | X* | | | | | | |
| | **56.55** | 31 | 1416 | 0.70 | 0.46 | 0.35 | 0.23 | X* | X* | | | | | | |
| | **65.99** | 27 | 1239 | 0.53 | 0.35 | 0.27 | 0.18 | X* | X* | | | | | | |
| | **79.40** | 22 | 1142 | 0.40 | 0.26 | 0.20 | 0.13 | X* | X* | | | | | | |
| | **85.72** | 20 | 1239 | 0.39 | 0.26 | 0.20 | 0.13 | X* | | | | | | | |
| | **103.12** | 17 | 1142 | 0.31 | 0.20 | 0.15 | 0.10 | X* | | | | | | | |
| | **139.16** | 13 | 974 | 0.20 | 0.13 | 0.10 | 0.07 | X* | | | | | | | |

* Caution - The motor power may exceed the gear unit's mechanical torque capacity
◈ The mechanical power limit of the solid input shaft type "W" may limit the reducer rating.
All ratings are mechanical. See page 14 for thermal considerations.

| lb | W | 56C | 140TC |
|---|---|---|---|
| **SK 0182NB** | 13 | 18 | 22 |
| **SK 0282NB** | 22 | 26 | 31 |


Send Quote Requests to info@automatedpt.com
Call +1(800)985-6929 To Order or Order Online At Nordgearmotors.com

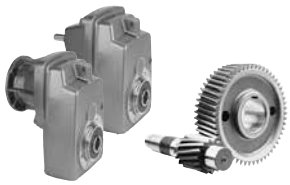

# SK 1382NB , SK 1282/02
# NEMA-C + W
# Ratings & Combinations



| Model Type | Gear Ratio | Output Speed | Output Torque* | Maximum input power◈ Solid input shafts type "W" | | | | NEMA C-Face* Available Combinations | | | | | | | |
|---|---|---|---|---|---|---|---|---|---|---|---|---|---|---|---|
| | | | | Input Speed | | | | | | | | | | | |
| | $i_{tot}$ | $n_2$ 1750 rpm | $T_{2\,max}$ | 1750 rpm | 1150 rpm | 875 rpm | 580 rpm | | | | | | | | |
| | | [rpm] | [lb-in] | [hp] | [hp] | [hp] | [hp] | 56C | 140TC | 180TC | 210TC | 250TC | 280TC | 320TC | 360TC |
| **SK 1382NB** | 16.28 | 107 | 2044 | 3.47 | 2.29 | 1.74 | 1.15 | X | X | X* | | | | | |
| | 18.75 | 93 | 2151 | 3.17 | 2.09 | 1.59 | 1.05 | X | X | X* | | | | | |
| | 24.26 | 72 | 2451 | 2.80 | 1.85 | 1.40 | 0.92 | X | X | X* | | | | | |
| | 26.01 | 67 | 2398 | 2.55 | 1.68 | 1.27 | 0.84 | X | X | X* | | | | | |
| | 29.79 | 59 | 2496 | 2.34 | 1.54 | 1.17 | 0.77 | X | X | X* | | | | | |
| | 35.75 | 49 | 2655 | 2.06 | 1.36 | 1.03 | 0.68 | X | X | X* | | | | | |
| | 38.77 | 45 | 2867 | 2.05 | 1.35 | 1.02 | 0.68 | X | X | X* | | | | | |
| | 44.40 | 39 | 2982 | 1.85 | 1.22 | 0.92 | 0.61 | X | X* | X* | | | | | |
| | 53.28 | 33 | 3159 | 1.65 | 1.09 | 0.83 | 0.55 | X | X* | X* | | | | | |
| | 60.00 | 29 | 3275 | 1.51 | 0.99 | 0.75 | 0.50 | X | X* | | | | | | |
| | 68.23 | 26 | 3275 | 1.35 | 0.89 | 0.68 | 0.45 | X | X* | | | | | | |
| | 78.99 | 22 | 3275 | 1.14 | 0.75 | 0.57 | 0.38 | X | X* | X* | | | | | |
| | 88.94 | 20 | 3275 | 1.04 | 0.69 | 0.52 | 0.34 | X | X* | | | | | | |
| | 101.14 | 17 | 3275 | 0.88 | 0.58 | 0.44 | 0.29 | X* | X* | | | | | | |
| | **106.08** | 16 | 3275 | 0.83 | 0.55 | 0.42 | 0.27 | X* | X* | | | | | | |
| | 118.16 | 15 | 3275 | 0.78 | 0.51 | 0.39 | 0.26 | X* | X* | | | | | | |
| | **136.60** | 13 | 3275 | 0.68 | 0.45 | 0.34 | 0.22 | X* | | | | | | | |
| | **158.12** | 11 | 3275 | 0.57 | 0.38 | 0.29 | 0.19 | X* | X* | | | | | | |
| | **203.60** | 8.6 | 3275 | 0.45 | 0.29 | 0.22 | 0.15 | X* | | | | | | | |
| | **257.32** | 6.8 | 3275 | 0.35 | 0.23 | 0.18 | 0.12 | X* | | | | | | | |
| | **301.82** | 5.8 | 3275 | 0.30 | 0.20 | 0.15 | 0.10 | X* | | | | | | | |
| | **381.45** | 4.6 | 3275 | 0.24 | 0.16 | 0.12 | 0.08 | X* | | | | | | | |
| **SK 1282/02** | 229.08 | 7.6 | 2567 | 0.33 | 0.22 | 0.17 | 0.11 | X* | X* | | | | | | |
| | 283.85 | 6.2 | 2567 | 0.31 | 0.20 | 0.15 | 0.10 | X* | X* | | | | | | |
| | 328.02 | 5.3 | 2567 | 0.27 | 0.18 | 0.13 | 0.09 | X* | X* | | | | | | |
| | 405.75 | 4.3 | 2567 | 0.23 | 0.15 | 0.11 | 0.08 | X* | X* | | | | | | |
| | 546.50 | 3.2 | 2567 | 0.18 | 0.12 | 0.09 | 0.06 | X* | X* | | | | | | |
| | 663.69 | 2.6 | 2567 | 0.16 | 0.11 | 0.08 | 0.05 | X* | X* | | | | | | |
| | 826.23 | 2.1 | 2567 | 0.14 | 0.09 | 0.07 | 0.05 | X* | X* | | | | | | |
| | 1066.50 | 1.6 | 2567 | 0.12 | 0.08 | 0.06 | 0.04 | X* | X* | | | | | | |
| | **1362.13** | 1.3 | 2567 | 0.11 | 0.07 | 0.05 | 0.04 | X* | | | | | | | |
| | **1620.65** | 1.1 | 2567 | 0.10 | 0.06 | 0.05 | 0.03 | X* | | | | | | | |
| | **1968.10** | 0.89 | 2567 | 0.09 | 0.06 | 0.04 | 0.03 | X* | | | | | | | |
| | **2448.65** | 0.71 | 2567 | 0.08 | 0.05 | 0.04 | 0.03 | X* | | | | | | | |
| | **3608.19** | 0.49 | 2567 | 0.07 | 0.05 | 0.04 | 0.02 | X* | | | | | | | |

* Caution - The motor power may exceed the gear unit's mechanical torque capacity
◈ The mechanical power limit of the solid input shaft type "W" may limit the reducer rating.
All ratings are mechanical. See page 14 for thermal considerations.

| lb | W | 56C | 140TC | 180TC |
|---|---|---|---|---|
| **SK 1382NB** | 49 | 53 | 57 | 68 |
| **SK 1282/02** | 57 | 62 | 68 | – |


Send Quote Requests to info@automatedpt.com
Call +1(800)985-6929 To Order or Order Online At Nordgearmotors.com

# SK 1282
# NEMA-C + W
# Ratings & Combinations

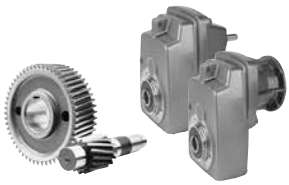

DRIVESYSTEMS



| Model Type | Gear Ratio | Output Speed | Output Torque* | Maximum input power◈ Solid input shafts type "W" | | | | NEMA C-Face* Available Combinations | | | | | | | |
|---|---|---|---|---|---|---|---|---|---|---|---|---|---|---|---|
| | | | | Input Speed | | | | | | | | | | | |
| | $i_{tot}$ | $n_2$ 1750 rpm | $T_{2\,max}$ | 1750 rpm | 1150 rpm | 875 rpm | 580 rpm | | | | | | | | |
| | | [rpm] | [lb-in] | [hp] | [hp] | [hp] | [hp] | 56C | 140TC | 180TC | 210TC | 250TC | 280TC | 320TC | 360TC |
| **SK 1282** | 4.79 | 365 | 1133 | 5.00 | 3.30 | 2.50 | 1.65 | X | X | X | | | | | |
| | 5.47 | 320 | 1522 | 5.00 | 3.30 | 2.50 | 1.65 | X | X | X | | | | | |
| | 6.43 | 272 | 1602 | 5.00 | 3.30 | 2.50 | 1.65 | X | X | X | | | | | |
| | 7.24 | 242 | 1655 | 5.00 | 3.30 | 2.50 | 1.65 | X | X | X | | | | | |
| | 8.21 | 213 | 1416 | 4.79 | 3.16 | 2.39 | 1.58 | X | X | X* | | | | | |
| | 8.24 | 212 | 1690 | 5.00 | 3.30 | 2.50 | 1.65 | X | X | X | | | | | |
| | 9.18 | 191 | 1673 | 5.00 | 3.30 | 2.50 | 1.65 | X | X | X | | | | | |
| | 10.34 | 169 | 1735 | 4.65 | 3.07 | 2.33 | 1.53 | X | X | X* | | | | | |
| | 11.76 | 149 | 1805 | 4.27 | 2.82 | 2.13 | 1.41 | X | X | X* | | | | | |
| | 14.11 | 124 | 1859 | 3.66 | 2.41 | 1.83 | 1.21 | X | X | X* | | | | | |
| | 17.21 | 102 | 1982 | 3.21 | 2.12 | 1.60 | 1.06 | X | X | X* | | | | | |
| | 20.57 | 85 | 1991 | 2.69 | 1.77 | 1.34 | 0.89 | X | X | X* | | | | | |
| | 25.22 | 69 | 1991 | 2.18 | 1.44 | 1.09 | 0.72 | X | X | X* | | | | | |
| | 28.33 | 62 | 1991 | 1.96 | 1.29 | 0.98 | 0.65 | X | X* | | | | | | |
| | 32.08 | 55 | 2036 | 1.78 | 1.17 | 0.89 | 0.59 | X | X* | | | | | | |
| | **41.07** | 43 | 1920 | 1.31 | 0.86 | 0.66 | 0.43 | X | X* | | | | | | |
| | **46.19** | 38 | 1735 | 1.05 | 0.69 | 0.52 | 0.35 | X | | | | | | | |
| | **49.25** | 36 | 2301 | 1.31 | 0.87 | 0.66 | 0.43 | X | X* | | | | | | |
| | **55.39** | 32 | 2080 | 1.06 | 0.70 | 0.53 | 0.35 | X | | | | | | | |
| | **58.89** | 30 | 2505 | 1.19 | 0.79 | 0.60 | 0.39 | X | X* | | | | | | |
| | **66.23** | 26 | 2390 | 0.99 | 0.65 | 0.49 | 0.33 | X* | | | | | | | |
| | **72.17** | 24 | 2620 | 1.00 | 0.66 | 0.50 | 0.33 | X | X* | | | | | | |
| | **81.17** | 22 | 2620 | 0.91 | 0.60 | 0.46 | 0.30 | X* | | | | | | | |
| | **92.48** | 19 | 2053 | 0.62 | 0.41 | 0.31 | 0.20 | X* | | | | | | | |
| | **109.50** | 16 | 1850 | 0.47 | 0.31 | 0.23 | 0.15 | X* | | | | | | | |

* Caution - The motor power may exceed the gear unit's mechanical torque capacity
◈ The mechanical power limit of the solid input shaft type "W" may limit the reducer rating.
All ratings are mechanical. See page 14 for thermal considerations.

| lb | W | 56C | 140TC | 180TC |
|---|---|---|---|---|
| **SK 1282** | 40 | 42 | 51 | 66 |


Send Quote Requests to info@automatedpt.com
Call +1(800)985-6929 To Order or Order Online At Nordgearmotors.com

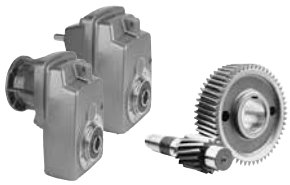

# SK 2282
# NEMA-C + W
# Ratings & Combinations

| Model Type | Gear Ratio | Output Speed | Output Torque* | Maximum input power◈ Solid input shafts type "W" | | | | NEMA C-Face* Available Combinations | | | | | | | |
|---|---|---|---|---|---|---|---|---|---|---|---|---|---|---|---|
| | | | | Input Speed | | | | | | | | | | | |
| | $i_{tot}$ | $n_2$ 1750 rpm | $T_{2\,max}$ | 1750 rpm | 1150 rpm | 875 rpm | 580 rpm | | | | | | | | |
| | | [rpm] | [lb-in] | [hp] | [hp] | [hp] | [hp] | 56C | 140TC | 180TC | 210TC | 250TC | 280TC | 320TC | 360TC |
| **SK 2282** | 4.51 | 388 | 1646 | 5.00 | 3.30 | 2.50 | 1.65 | X | X | X | X | | | | |
| | 5.72 | 306 | 1876 | 5.00 | 3.30 | 2.50 | 1.65 | X | X | X | X | | | | |
| | 6.43 | 272 | 2000 | 5.00 | 3.30 | 2.50 | 1.65 | X | X | X | | | | | |
| | 7.48 | 234 | 2151 | 5.00 | 3.30 | 2.50 | 1.65 | X | X | X | | | | | |
| | 8.37 | 209 | 2266 | 5.00 | 3.30 | 2.50 | 1.65 | X | X | X | | | | | |
| | 9.03 | 194 | 2965 | 5.00 | 3.30 | 2.50 | 1.65 | X | X | X | | | | | |
| | 10.15 | 172 | 3151 | 5.00 | 3.30 | 2.50 | 1.65 | X | X | X | | | | | |
| | 11.81 | 148 | 3398 | 5.00 | 3.30 | 2.50 | 1.65 | X | X | X | | | | | |
| | 13.23 | 132 | 3584 | 5.00 | 3.30 | 2.50 | 1.65 | X | X | X | | | | | |
| | 16.53 | 106 | 4168 | 5.00 | 3.30 | 2.50 | 1.65 | X | X | X | | | | | |
| | 18.51 | 95 | 4301 | 5.00 | 3.30 | 2.50 | 1.65 | X | X | X | | | | | |
| | 21.90 | 80 | 4248 | 5.00 | 3.30 | 2.50 | 1.65 | X | X | X | | | | | |
| | 23.96 | 73 | 3850 | 4.46 | 2.94 | 2.23 | 1.47 | X | X | X* | | | | | |
| | 24.97 | 70 | 4337 | 4.82 | 3.18 | 2.41 | 1.59 | X | X | X* | | | | | |
| | 26.83 | 65 | 3885 | 4.01 | 2.64 | 2.00 | 1.32 | X | X | X* | | | | | |
| | 29.65 | 59 | 4425 | 4.14 | 2.73 | 2.07 | 1.37 | X | X | X* | | | | | |
| | **31.23** | 56 | 3938 | 3.50 | 2.31 | 1.75 | 1.15 | X | X | X* | | | | | |
| | **36.54** | 48 | 4434 | 3.38 | 2.23 | 1.69 | 1.11 | X | X | X* | | | | | |
| | 37.18 | 47 | 4071 | 3.04 | 2.00 | 1.52 | 1.00 | X | X | | | | | | |
| | **43.71** | 40 | 4983 | 3.16 | 2.09 | 1.58 | 1.04 | X | X | X* | | | | | |
| | **45.11** | 39 | 3983 | 2.46 | 1.63 | 1.23 | 0.81 | X | X | | | | | | |
| | **51.71** | 34 | 4611 | 2.49 | 1.64 | 1.24 | 0.82 | X | X | X* | | | | | |
| | **53.96** | 32 | 4478 | 2.27 | 1.50 | 1.14 | 0.75 | X | X | | | | | | |
| | **63.83** | 27 | 4611 | 1.98 | 1.30 | 0.99 | 0.65 | X | X* | | | | | | |
| | **69.67** | 25 | 3921 | 1.56 | 1.03 | 0.78 | 0.51 | X | X* | | | | | | |
| | **82.42** | 21 | 4221 | 1.41 | 0.93 | 0.70 | 0.46 | X | X* | | | | | | |
| | **100.98** | 17 | 3894 | 1.05 | 0.69 | 0.53 | 0.35 | X | X* | | | | | | |
| | **104.07** | 17 | 3513 | 0.95 | 0.63 | 0.47 | 0.31 | X* | X* | | | | | | |
| | **127.51** | 14 | 3363 | 0.75 | 0.49 | 0.37 | 0.25 | X* | X* | | | | | | |

* Caution - The motor power may exceed the gear unit's mechanical torque capacity
◈ The mechanical power limit of the solid input shaft type "W" may limit the reducer rating.
All ratings are mechanical. See page 14 for thermal considerations.

W + NEMA

| lb | W | 56C | 140TC | 180TC | 210TC |
|---|---|---|---|---|---|
| **SK 2282** | 77 | 73 | 82 | 90 | 90 |


Send Quote Requests to info@automatedpt.com
Call +1(800)985-6929 To Order or Order Online At Nordgearmotors.com

# SK 2382, SK 2282/02
# NEMA-C + W
# Ratings & Combinations

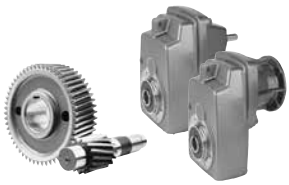

DRIVESYSTEMS



| Model Type | Gear Ratio | Output Speed | Output Torque* | Maximum input power◈ Solid input shafts type "W" | | | | NEMA C-Face* Available Combinations | | | | | | | |
|---|---|---|---|---|---|---|---|---|---|---|---|---|---|---|---|
| | | | | Input Speed | | | | | | | | | | | |
| | $i_{tot}$ | $n_2$ 1750 rpm | $T_{2\,max}$ | 1750 rpm | 1150 rpm | 875 rpm | 580 rpm | | | | | | | | |
| | | [rpm] | [lb-in] | [hp] | [hp] | [hp] | [hp] | 56C | 140TC | 180TC | 210TC | 250TC | 280TC | 320TC | 360TC |
| **SK 2382** | 82.22 | 21 | 4965 | 1.50 | 0.99 | 0.75 | 0.50 | X | X* | | | | | | |
| | 98.35 | 18 | 4983 | 1.42 | 0.94 | 0.71 | 0.47 | X | X* | | | | | | |
| | 116.35 | 15 | 4611 | 1.10 | 0.72 | 0.55 | 0.36 | X | X* | | | | | | |
| | 131.86 | 13 | 4611 | 0.95 | 0.63 | 0.48 | 0.31 | X* | X* | | | | | | |
| | 149.96 | 12 | 4611 | 0.88 | 0.58 | 0.44 | 0.29 | X* | X* | | | | | | |
| | 185.11 | 9.5 | 4611 | 0.70 | 0.46 | 0.35 | 0.23 | X* | X* | | | | | | |
| | **236.11** | 7.4 | 4186 | 0.49 | 0.32 | 0.25 | 0.16 | X* | | | | | | | |
| | **276.27** | 6.3 | 4894 | 0.49 | 0.32 | 0.24 | 0.16 | X* | | | | | | | |
| | **330.45** | 5.3 | 4983 | 0.42 | 0.28 | 0.21 | 0.14 | X* | | | | | | | |
| | **390.93** | 4.5 | 4611 | 0.33 | 0.22 | 0.16 | 0.11 | X* | | | | | | | |
| | **482.56** | 3.6 | 4611 | 0.26 | 0.17 | 0.13 | 0.09 | X* | | | | | | | |
| | **623.10** | 2.8 | 4611 | 0.20 | 0.14 | 0.10 | 0.07 | X* | | | | | | | |
| | **763.41** | 2.3 | 3876 | 0.14 | 0.09 | 0.07 | 0.05 | X* | | | | | | | |
| **SK 2282/02** | 174.78 | 10 | 4602 | 0.50 | 0.33 | 0.25 | 0.17 | X* | X* | | | | | | |
| | 215.75 | 8.1 | 4602 | 0.50 | 0.33 | 0.25 | 0.17 | X* | X* | | | | | | |
| | 287.51 | 6.1 | 4602 | 0.50 | 0.33 | 0.25 | 0.16 | X* | X* | | | | | | |
| | 356.28 | 4.9 | 4602 | 0.41 | 0.27 | 0.21 | 0.14 | X* | X* | | | | | | |
| | 423.50 | 4.1 | 4602 | 0.35 | 0.23 | 0.18 | 0.12 | X* | X* | | | | | | |
| | 514.51 | 3.4 | 4602 | 0.30 | 0.20 | 0.15 | 0.10 | X* | X* | | | | | | |
| | 662.92 | 2.6 | 4602 | 0.24 | 0.16 | 0.12 | 0.08 | X* | X* | | | | | | |
| | 824.77 | 2.1 | 4602 | 0.21 | 0.14 | 0.10 | 0.07 | X* | X* | | | | | | |
| | 1064.71 | 1.6 | 4602 | 0.17 | 0.11 | 0.09 | 0.06 | X* | X* | | | | | | |
| | **1423.06** | 1.2 | 4602 | 0.14 | 0.09 | 0.07 | 0.05 | X* | | | | | | | |
| | **1728.15** | 1.0 | 4602 | 0.13 | 0.08 | 0.06 | 0.04 | X* | | | | | | | |
| | **2133.20** | 0.82 | 4602 | 0.11 | 0.07 | 0.06 | 0.04 | X* | | | | | | | |
| | **2654.05** | 0.66 | 4602 | 0.10 | 0.07 | 0.05 | 0.03 | X* | | | | | | | |
| | **3426.39** | 0.51 | 4602 | 0.09 | 0.06 | 0.05 | 0.03 | X* | | | | | | | |

* Caution - The motor power may exceed the gear unit's mechanical torque capacity
◈ The mechanical power limit of the solid input shaft type "W" may limit the reducer rating.
All ratings are mechanical. See page 14 for thermal considerations.

| lb | W | 56C | 140TC |
|---|---|---|---|
| **SK 2382** | 49 | 53 | 57 |
| **SK 2282/02** | 57 | 62 | 66 |


Send Quote Requests to info@automatedpt.com
Call +1(800)985-6929 To Order or Order Online At Nordgearmotors.com

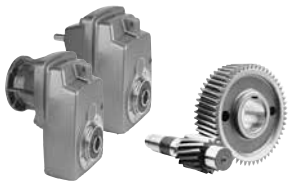

# SK 3282
# NEMA-C + W
# Ratings & Combinations

| Model Type | Gear Ratio | Output Speed | Output Torque* | Maximum input power◈ Solid input shafts type "W" | | | | NEMA C-Face* Available Combinations | | | | | | | |
|---|---|---|---|---|---|---|---|---|---|---|---|---|---|---|---|
| | | | | Input Speed | | | | | | | | | | | |
| | $i_{tot}$ | $n_2$ 1750 rpm | $T_{2\,max}$ | 1750 rpm | 1150 rpm | 875 rpm | 580 rpm | | | | | | | | |
| | | [rpm] | [lb-in] | [hp] | [hp] | [hp] | [hp] | 56C | 140TC | 180TC | 210TC | 250TC | 280TC | 320TC | 360TC |
| **SK 3282** | 4.48 | 391 | 4080 | 10.00 | 6.60 | 5.00 | 3.30 | X | X | X | X | | | | |
| | 5.74 | 305 | 4964 | 10.00 | 6.60 | 5.00 | 3.30 | X | X | X | X | | | | |
| | 6.70 | 261 | 5372 | 10.00 | 6.60 | 5.00 | 3.30 | X | X | X | X | | | | |
| | 8.31 | 211 | 5983 | 10.00 | 6.60 | 5.00 | 3.30 | X | X | X | X | | | | |
| | 9.80 | 179 | 7425 | 10.00 | 6.60 | 5.00 | 3.30 | X | X | X | X | | | | |
| | 11.38 | 154 | 7266 | 10.00 | 6.60 | 5.00 | 3.30 | X | X | X | X | | | | |
| | 14.11 | 124 | 7584 | 10.00 | 6.60 | 5.00 | 3.30 | X | X | X | X | | | | |
| | 16.67 | 105 | 7443 | 10.00 | 6.60 | 5.00 | 3.30 | X | X | X | X | | | | |
| | 20.18 | 87 | 7275 | 10.00 | 6.60 | 5.00 | 3.30 | X | X | X | X | | | | |
| | 21.38 | 82 | 6390 | 8.31 | 5.49 | 4.16 | 2.74 | X | X | X | X* | | | | |
| | 22.45 | 78 | 7080 | 8.76 | 5.78 | 4.38 | 2.89 | X | X | X | X* | | | | |
| | 23.71 | 74 | 7124 | 8.36 | 5.52 | 4.18 | 2.76 | X | X | X | X* | | | | |
| | 25.88 | 68 | 7487 | 8.08 | 5.33 | 4.04 | 2.67 | X | X | X | X* | | | | |
| | 28.70 | 61 | 7700 | 7.45 | 4.92 | 3.73 | 2.46 | X | X | X | X* | | | | |
| | 31.93 | 55 | 7761 | 6.77 | 4.47 | 3.39 | 2.24 | X | X | X | X* | | | | |
| | 37.77 | 46 | 7390 | 5.39 | 3.56 | 2.70 | 1.78 | X | X | X | | | | | |
| | **38.62** | 45 | 5611 | 4.01 | 2.64 | 2.00 | 1.32 | X | X | X* | | | | | |
| | 42.02 | 42 | 8222 | 5.48 | 3.62 | 2.74 | 1.81 | X | X | X* | | | | | |
| | **44.85** | 39 | 6522 | 4.04 | 2.66 | 2.02 | 1.33 | X | X | X* | | | | | |
| | **48.04** | 36 | 4885 | 2.79 | 1.84 | 1.40 | 0.92 | X | X | | | | | | |
| | **52.97** | 33 | 7478 | 3.92 | 2.58 | 1.96 | 1.29 | X | X | X* | | | | | |
| | **55.79** | 31 | 5682 | 2.79 | 1.84 | 1.40 | 0.92 | X | X | | | | | | |
| | **64.12** | 27 | 8983 | 3.85 | 2.54 | 1.92 | 1.27 | X | X | X* | | | | | |
| | **65.89** | 27 | 6708 | 2.87 | 1.90 | 1.44 | 0.95 | X | X | | | | | | |
| | **70.56** | 25 | 4991 | 1.98 | 1.31 | 0.99 | 0.65 | X | X* | | | | | | |
| | **79.76** | 22 | 7523 | 2.63 | 1.73 | 1.31 | 0.87 | X | X | | | | | | |
| | **88.74** | 20 | 8363 | 2.65 | 1.75 | 1.33 | 0.88 | X | X | | | | | | |
| | **100.88** | 17 | 7142 | 1.93 | 1.27 | 0.96 | 0.64 | X | X* | | | | | | |
| | **112.23** | 16 | 6815 | 1.73 | 1.14 | 0.86 | 0.57 | X | X* | | | | | | |

* Caution - The motor power may exceed the gear unit's mechanical torque capacity
◈ The mechanical power limit of the solid input shaft type "W" may limit the reducer rating.
All ratings are mechanical. See page 14 for thermal considerations.

| lb | W | 56C | 140TC | 180TC | 210TC |
|---|---|---|---|---|---|
| **SK 3282** | 110 | 106 | 115 | 123 | 143 |


G1000 - Subject to Change Without Notice
Send Quote Requests to info@automatedpt.com
Call +1(800)985-6929 To Order or Order Online At Nordgearmotors.com

# SK 3382, SK 3282/12
# NEMA-C + W
# Ratings & Combinations

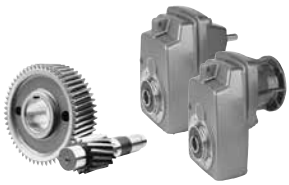

DRIVESYSTEMS



| Model Type | Gear Ratio $i_{tot}$ | Output Speed $n_2$ 1750 rpm [rpm] | Output Torque* $T_{2\,max}$ [lb-in] | Maximum input power◈ Solid input shafts type "W" Input Speed 1750 rpm [hp] | 1150 rpm [hp] | 875 rpm [hp] | 580 rpm [hp] | NEMA C-Face* Available Combinations 56C | 140TC | 180TC | 210TC | 250TC | 280TC | 320TC | 360TC |
|---|---|---|---|---|---|---|---|---|---|---|---|---|---|---|---|
| **SK 3382** | 89.60 | 20 | 5496 | 1.50 | 0.99 | 0.75 | 0.50 | X | X* | X* | | | | | |
| | 104.05 | 17 | 6505 | 1.50 | 0.99 | 0.75 | 0.50 | X | X* | X* | | | | | |
| | 126.93 | 14 | 6850 | 1.50 | 0.99 | 0.75 | 0.50 | X | X* | X* | | | | | |
| | 161.46 | 11 | 6974 | 1.22 | 0.80 | 0.61 | 0.40 | X | X* | | | | | | |
| | 190.69 | 9.2 | 7664 | 1.12 | 0.74 | 0.56 | 0.37 | X | X* | | | | | | |
| | 230.83 | 7.6 | 8850 | 1.07 | 0.70 | 0.53 | 0.35 | X | X* | | | | | | |
| | 287.14 | 6.1 | 8301 | 0.80 | 0.53 | 0.40 | 0.27 | X* | X* | | | | | | |
| | **408.58** | 4.3 | 7045 | 0.48 | 0.32 | 0.24 | 0.16 | X* | | | | | | | |
| | **482.56** | 3.6 | 7664 | 0.44 | 0.29 | 0.22 | 0.14 | X* | | | | | | | |
| | **584.13** | 3.0 | 8850 | 0.42 | 0.28 | 0.21 | 0.14 | X* | | | | | | | |
| | **726.61** | 2.4 | 8354 | 0.32 | 0.21 | 0.16 | 0.10 | X* | | | | | | | |
| | **808.42** | 2.2 | 9195 | 0.32 | 0.21 | 0.16 | 0.11 | X* | | | | | | | |
| | **919.00** | 1.9 | 7275 | 0.22 | 0.14 | 0.11 | 0.07 | X* | | | | | | | |
| | **1022.42** | 1.7 | 6965 | 0.19 | 0.12 | 0.09 | 0.06 | X* | | | | | | | |
| **SK 3282/12** | 87.73 | 20 | 7965 | 2.00 | 1.32 | 1.00 | 0.66 | X | X | X* | | | | | |
| | 114.23 | 15 | 7965 | 1.90 | 1.25 | 0.95 | 0.63 | X | X* | X* | | | | | |
| | 141.49 | 12 | 7965 | 1.52 | 1.00 | 0.76 | 0.50 | X | X* | X* | | | | | |
| | 179.57 | 9.7 | 7965 | 1.23 | 0.81 | 0.61 | 0.40 | X | X* | X* | | | | | |
| | 217.37 | 8.1 | 7965 | 1.02 | 0.68 | 0.51 | 0.34 | X | X* | X* | | | | | |
| | 270.39 | 6.5 | 7965 | 0.88 | 0.58 | 0.44 | 0.29 | X* | X* | X* | | | | | |
| | 358.12 | 4.9 | 7965 | 0.67 | 0.44 | 0.34 | 0.22 | X* | X* | X* | | | | | |
| | 461.81 | 3.8 | 7965 | 0.53 | 0.35 | 0.27 | 0.18 | X* | X* | X* | | | | | |
| | 520.83 | 3.4 | 7965 | 0.48 | 0.32 | 0.24 | 0.16 | X* | X* | X* | | | | | |
| | 686.08 | 2.6 | 7965 | 0.38 | 0.25 | 0.19 | 0.13 | X* | X* | X* | | | | | |
| | 853.43 | 2.1 | 7965 | 0.32 | 0.21 | 0.16 | 0.11 | X* | X* | X* | | | | | |
| | 1067.99 | 1.6 | 7965 | 0.26 | 0.17 | 0.13 | 0.08 | X* | X* | X* | | | | | |
| | 1335.98 | 1.3 | 7965 | 0.22 | 0.14 | 0.11 | 0.07 | X* | X* | X* | | | | | |
| | 1697.29 | 1.0 | 7965 | 0.18 | 0.12 | 0.09 | 0.06 | X* | X* | | | | | | |
| | **2248.69** | 0.78 | 7965 | 0.15 | 0.10 | 0.08 | 0.05 | X* | | | | | | | |
| | **2797.18** | 0.63 | 7965 | 0.13 | 0.09 | 0.07 | 0.04 | X* | | | | | | | |
| | **3435.26** | 0.51 | 7965 | 0.12 | 0.08 | 0.06 | 0.04 | X* | | | | | | | |

* Caution - The motor power may exceed the gear unit's mechanical torque capacity
◈ The mechanical power limit of the solid input shaft type "W" may limit the reducer rating.
All ratings are mechanical. See page 14 for thermal considerations.

| lb | W | 56C | 140TC | 180TC |
|---|---|---|---|---|
| **SK 3382** | 115 | 119 | 126 | 141 |
| **SK 3282/12** | 119 | 123 | 130 | 146 |


Send Quote Requests to info@automatedpt.com
Call +1(800)985-6929 To Order or Order Online At Nordgearmotors.com

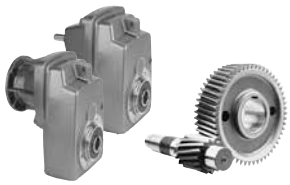

# SK 4282
# NEMA-C + W
# Ratings & Combinations

| Model Type | Gear Ratio | Output Speed | Output Torque* | Maximum input power◈ Solid input shafts type "W" | | | | NEMA C-Face* Available Combinations | | | | | | | |
|---|---|---|---|---|---|---|---|---|---|---|---|---|---|---|---|
| | | | | Input Speed | | | | | | | | | | | |
| | $i_{tot}$ | $n_2$ 1750 rpm | $T_{2\,max}$ | 1750 rpm | 1150 rpm | 875 rpm | 580 rpm | | | | | | | | |
| | | [rpm] | [lb-in] | [hp] | [hp] | [hp] | [hp] | 56C | 140TC | 180TC | 210TC | 250TC | 280TC | 320TC | 360TC |
| **SK 4282** | 4.70 | 372 | 9160 | 20.00 | 13.20 | 10.00 | 6.60 | | | X | X | X | | | |
| | 5.00 | 350 | 9160 | 20.00 | 13.20 | 10.00 | 6.60 | | | X | X | X | | | |
| | 5.43 | 322 | 9160 | 20.00 | 13.20 | 10.00 | 6.60 | | | X | X | X | | | |
| | 6.06 | 289 | 10620 | 20.00 | 13.20 | 10.00 | 6.60 | X | X | X | X | X | | | |
| | 7.13 | 245 | 10638 | 20.00 | 13.20 | 10.00 | 6.60 | X | X | X | X | X | | | |
| | 8.33 | 210 | 11257 | 20.00 | 13.20 | 10.00 | 6.60 | X | X | X | X | X | | | |
| | 9.23 | 190 | 14461 | 20.00 | 13.20 | 10.00 | 6.60 | X | X | X | X | X | | | |
| | 10.85 | 161 | 15045 | 20.00 | 13.20 | 10.00 | 6.60 | X | X | X | X | X | | | |
| | 12.68 | 138 | 15488 | 20.00 | 13.20 | 10.00 | 6.60 | X | X | X | X | X | | | |
| | 15.20 | 115 | 15930 | 20.00 | 13.20 | 10.00 | 6.60 | X | X | X | X | X | | | |
| | 18.18 | 96 | 15930 | 20.00 | 13.20 | 10.00 | 6.60 | X | X | X | X | X | | | |
| | 21.45 | 82 | 14921 | 19.41 | 12.81 | 9.71 | 6.41 | X | X | X | X | X* | | | |
| | 22.39 | 78 | 15036 | 18.61 | 12.28 | 9.30 | 6.14 | X | X | X | X | X* | | | |
| | 26.25 | 67 | 14231 | 15.13 | 9.98 | 7.56 | 4.99 | X | X | X | X | X* | | | |
| | 26.43 | 66 | 15815 | 16.56 | 10.93 | 8.28 | 5.47 | X | X | X | X | X* | | | |
| | **26.72** | 65 | 14160 | 14.60 | 9.64 | 7.30 | 4.82 | | | X | X | | | | |
| | **32.04** | 55 | 15797 | 13.79 | 9.10 | 6.89 | 4.55 | | | X | X | | | | |
| | 32.34 | 54 | 14337 | 12.28 | 8.11 | 6.14 | 4.05 | X | X | X | X | X* | | | |
| | **36.40** | 48 | 12169 | 9.27 | 6.12 | 4.63 | 3.06 | | | X | X* | | | | |
| | 36.81 | 48 | 12390 | 9.44 | 6.23 | 4.72 | 3.11 | X | X | X | X* | | | | |
| | **38.31** | 46 | 17700 | 12.92 | 8.53 | 6.46 | 4.26 | | | X | X* | | | | |
| | 40.74 | 43 | 13771 | 9.40 | 6.20 | 4.70 | 3.10 | X | X | X | X* | | | | |
| | **43.65** | 40 | 14160 | 8.99 | 5.93 | 4.49 | 2.97 | | | X | X* | | | | |
| | 45.05 | 39 | 14107 | 8.73 | 5.76 | 4.36 | 2.88 | X | X | X | X* | | | | |
| | **52.20** | 34 | 16089 | 8.68 | 5.73 | 4.34 | 2.86 | | | X | X* | | | | |
| | **61.60** | 28 | 15877 | 7.05 | 4.66 | 3.53 | 2.33 | | | X | X* | | | | |
| | **75.39** | 23 | 14063 | 5.13 | 3.39 | 2.57 | 1.69 | | | X | X* | | | | |
| | **76.70** | 23 | 14063 | 5.13 | 3.39 | 2.57 | 1.69 | X | X | X | | | | | |
| | **90.52** | 19 | 14160 | 4.27 | 2.82 | 2.13 | 1.41 | X | X | X* | | | | | |
| | **110.78** | 16 | 14160 | 3.59 | 2.37 | 1.80 | 1.19 | X | X | X* | | | | | |
| | **155.40** | 11 | 11284 | 1.97 | 1.30 | 0.98 | 0.65 | X | X* | | | | | | |

* Caution - The motor power may exceed the gear unit's mechanical torque capacity
◈ The mechanical power limit of the solid input shaft type "W" may limit the reducer rating.
All ratings are mechanical. See page 14 for thermal considerations.

W + NEMA

| lb | W | 56C | 140TC | 180TC | 210TC | 250TC |
|---|---|---|---|---|---|---|
| **SK 4282** | 165 | 154 | 170 | 170 | 201 | 223 |


Send Quote Requests to info@automatedpt.com
Call +1(800)985-6929 To Order or Order Online At Nordgearmotors.com

# SK 4382, SK 4282/12
# NEMA-C + W
# Ratings & Combinations

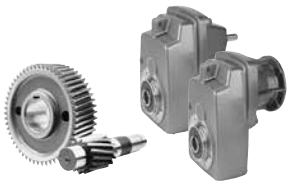

DRIVESYSTEMS



| Model Type | Gear Ratio | Output Speed | Output Torque* | Maximum input power◈ Solid input shafts type "W" | | | | NEMA C-Face* Available Combinations | | | | | | | |
|---|---|---|---|---|---|---|---|---|---|---|---|---|---|---|---|
| | | | | Input Speed | | | | | | | | | | | |
| | $i_{tot}$ | $n_2$ 1750 rpm | $T_{2\,max}$ | 1750 rpm | 1150 rpm | 875 rpm | 580 rpm | | | | | | | | |
| | | [rpm] | [lb-in] | [hp] | [hp] | [hp] | [hp] | 56C | 140TC | 180TC | 210TC | 250TC | 280TC | 320TC | 360TC |
| **SK 4382** | 66.65 | 26 | 10620 | 4.38 | 2.89 | 2.19 | 1.45 | X | X | X* | | | | | |
| | 86.83 | 20 | 17523 | 5.00 | 3.30 | 2.50 | 1.65 | X | X | X | | | | | |
| | 103.82 | 17 | 17700 | 4.77 | 3.15 | 2.39 | 1.58 | X | X | X* | | | | | |
| | 118.38 | 15 | 17700 | 4.21 | 2.78 | 2.11 | 1.39 | X | X | X* | | | | | |
| | 140.60 | 12 | 17700 | 3.37 | 2.22 | 1.69 | 1.11 | X | X | X* | | | | | |
| | 160.20 | 11 | 14664 | 2.56 | 1.69 | 1.28 | 0.84 | X | X | X* | | | | | |
| | 191.57 | 9.1 | 17612 | 2.54 | 1.68 | 1.27 | 0.84 | X | X | X* | | | | | |
| | **211.09** | 8.3 | 14470 | 1.91 | 1.26 | 0.95 | 0.63 | X | X* | | | | | | |
| | **253.12** | 6.9 | 17355 | 1.90 | 1.25 | 0.95 | 0.63 | X | X* | | | | | | |
| | **272.54** | 6.4 | 13912 | 1.41 | 0.93 | 0.71 | 0.47 | X | X* | | | | | | |
| | **302.65** | 5.8 | 18381 | 1.69 | 1.12 | 0.85 | 0.56 | X | X* | | | | | | |
| | **326.81** | 5.4 | 16727 | 1.43 | 0.95 | 0.72 | 0.47 | X | X* | | | | | | |
| | **344.84** | 5.1 | 14709 | 1.19 | 0.79 | 0.60 | 0.39 | X | X* | | | | | | |
| | **390.76** | 4.5 | 17700 | 1.26 | 0.83 | 0.63 | 0.42 | X | X* | | | | | | |
| | **412.38** | 4.2 | 17612 | 1.17 | 0.77 | 0.59 | 0.39 | X | X* | | | | | | |
| | **445.23** | 3.9 | 14744 | 0.91 | 0.60 | 0.46 | 0.30 | X* | X* | | | | | | |
| | **532.44** | 3.3 | 17700 | 0.93 | 0.61 | 0.46 | 0.31 | X* | X* | | | | | | |
| | **605.88** | 2.9 | 13054 | 0.60 | 0.40 | 0.30 | 0.20 | X* | X* | | | | | | |
| | **654.27** | 2.7 | 10912 | 0.47 | 0.31 | 0.23 | 0.15 | X* | X* | | | | | | |
| | **782.32** | 2.2 | 13063 | 0.46 | 0.30 | 0.23 | 0.15 | X* | X* | | | | | | |
| | **1097.48** | 1.6 | 9629 | 0.24 | 0.16 | 0.12 | 0.08 | X* | X* | | | | | | |
| | **1129.91** | 1.5 | 14160 | 0.34 | 0.22 | 0.17 | 0.11 | X* | X* | | | | | | |
| | **1585.08** | 1.1 | 12567 | 0.22 | 0.14 | 0.11 | 0.07 | X* | X* | | | | | | |
| **SK 4282/12** | 127.52 | 14 | 15930 | 3.00 | 1.98 | 1.50 | 0.99 | X | X | X* | | | | | |
| | 152.47 | 11 | 15930 | 2.78 | 1.84 | 1.39 | 0.92 | X | X | X* | | | | | |
| | 176.96 | 9.9 | 15930 | 2.50 | 1.65 | 1.25 | 0.83 | X | X | X* | | | | | |
| | 234.38 | 7.5 | 15930 | 1.90 | 1.25 | 0.95 | 0.63 | X | X* | X* | | | | | |
| | 302.24 | 5.8 | 15930 | 1.47 | 0.97 | 0.73 | 0.48 | X | X* | X* | | | | | |
| | 340.87 | 5.1 | 15930 | 1.29 | 0.85 | 0.64 | 0.43 | X | X* | X* | | | | | |
| | 409.92 | 4.3 | 15930 | 1.09 | 0.72 | 0.54 | 0.36 | X | X* | X* | | | | | |
| | 558.54 | 3.1 | 15930 | 0.84 | 0.55 | 0.42 | 0.28 | X* | X* | X* | | | | | |
| | 698.96 | 2.5 | 15930 | 0.69 | 0.45 | 0.34 | 0.23 | X* | X* | X* | | | | | |
| | 873.31 | 2.0 | 15930 | 0.56 | 0.37 | 0.28 | 0.18 | X* | X* | X* | | | | | |
| | 1110.82 | 1.6 | 15930 | 0.46 | 0.30 | 0.23 | 0.15 | X* | X* | | | | | | |
| | **1343.53** | 1.3 | 15930 | 0.38 | 0.25 | 0.19 | 0.13 | X* | | | | | | | |
| | **1830.65** | 0.96 | 15930 | 0.30 | 0.20 | 0.15 | 0.10 | X* | | | | | | | |
| | **2248.25** | 0.78 | 15930 | 0.25 | 0.17 | 0.13 | 0.08 | X* | | | | | | | |
| | **2782.46** | 0.63 | 15930 | 0.21 | 0.14 | 0.11 | 0.07 | X* | | | | | | | |

* Caution - The motor power may exceed the gear unit's mechanical torque capacity
◈ The mechanical power limit of the solid input shaft type "W" may limit the reducer rating.
All ratings are mechanical. See page 14 for thermal considerations.

| lb | W | 56C | 140TC | 180TC |
|---|---|---|---|---|
| **SK 4382** | 176 | 171 | 181 | 190 |
| **SK 4282/12** | 152 | 157 | 163 | 179 |


Send Quote Requests to info@automatedpt.com
Call +1(800)985-6929 To Order or Order Online At Nordgearmotors.com

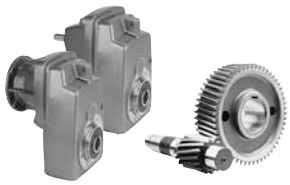

# SK 5282
# NEMA-C + W
# Ratings & Combinations

| Model Type | Gear Ratio | Output Speed | Output Torque* | Maximum input power◈ Solid input shafts type "W" | | | | NEMA C-Face* Available Combinations | | | | | | | |
|---|---|---|---|---|---|---|---|---|---|---|---|---|---|---|---|
| | | | | Input Speed | | | | | | | | | | | |
| | $i_{tot}$ | $n_2$ 1750 rpm | $T_{2\,max}$ | 1750 rpm | 1150 rpm | 875 rpm | 580 rpm | | | | | | | | |
| | | [rpm] | [lb-in] | [hp] | [hp] | [hp] | [hp] | 56C | 140TC | 180TC | 210TC | 250TC | 280TC | 320TC | 360TC |
| **SK 5282** | 4.32 | 405 | 13718 | 30.00 | 19.80 | 15.00 | 9.90 | | | | | X | X | | |
| | 5.01 | 349 | 15045 | 30.00 | 19.80 | 15.00 | 9.90 | | | | | X | X | | |
| | 5.29 | 331 | 15488 | 30.00 | 19.80 | 15.00 | 9.90 | | | | | X | X | | |
| | 5.71 | 306 | 15930 | 30.00 | 19.80 | 15.00 | 9.90 | | | | | X | X | | |
| | 6.33 | 276 | 18709 | 30.00 | 19.80 | 15.00 | 9.90 | | | X | X | X | X | | |
| | 7.17 | 244 | 19125 | 30.00 | 19.80 | 15.00 | 9.90 | | | X | X | X | X | | |
| | 8.70 | 201 | 20886 | 30.00 | 19.80 | 15.00 | 9.90 | X | X | X | X | X | X | | |
| | 9.46 | 185 | 20355 | 30.00 | 19.80 | 15.00 | 9.90 | | | X | X | X | X | | |
| | 10.71 | 163 | 22125 | 30.00 | 19.80 | 15.00 | 9.90 | | | X | X | X | X | | |
| | 13.00 | 135 | 23267 | 30.00 | 19.80 | 15.00 | 9.90 | X | X | X | X | X | X | | |
| | 15.38 | 114 | 23010 | 30.00 | 19.80 | 15.00 | 9.90 | X | X | X | X | X | X | | |
| | 17.59 | 99 | 24338 | 30.00 | 19.80 | 15.00 | 9.90 | X | X | X | X | X | X | | |
| | 18.88 | 93 | 23010 | 30.00 | 19.80 | 15.00 | 9.90 | X | X | X | X | X | X | | |
| | 20.36 | 86 | 27435 | 30.00 | 19.80 | 15.00 | 9.90 | X | X | X | X | X | X | | |
| | 25.00 | 70 | 25665 | 28.51 | 18.81 | 14.25 | 9.41 | X | X | X | X | X | X* | | |
| | 30.50 | 57 | 25665 | 23.21 | 15.32 | 11.61 | 7.66 | X | X | X | X | X | | | |
| | 33.43 | 52 | 20355 | 16.79 | 11.08 | 8.40 | 5.54 | X | X | X | X | X* | X* | | |
| | **35.46** | 49 | 23895 | 18.58 | 12.26 | 9.29 | 6.13 | | | X | X | | | | |
| | 40.80 | 43 | 22125 | 15.10 | 9.96 | 7.55 | 4.98 | X | X | X | X | X* | | | |
| | **41.94** | 42 | 28320 | 18.87 | 12.46 | 9.44 | 6.23 | | | X | X | | | | |
| | **47.27** | 37 | 21240 | 12.47 | 8.23 | 6.23 | 4.11 | | | X | X | | | | |
| | **51.49** | 34 | 28630 | 15.44 | 10.19 | 7.72 | 5.10 | | | X | X | | | | |
| | 55.55 | 32 | 22125 | 11.23 | 7.41 | 5.62 | 3.71 | X | X | X | X | | | | |
| | **55.90** | 31 | 23010 | 11.32 | 7.47 | 5.66 | 3.73 | | | X | X | | | | |
| | **68.63** | 25 | 26285 | 10.43 | 6.88 | 5.21 | 3.44 | | | X | X | | | | |
| | **81.61** | 21 | 16178 | 5.39 | 3.56 | 2.70 | 1.78 | X | X | X | | | | | |
| | **91.81** | 19 | 24417 | 7.36 | 4.86 | 3.68 | 2.43 | | | X | X* | | | | |
| | **100.19** | 17 | 19833 | 5.35 | 3.53 | 2.67 | 1.77 | X | X | X | | | | | |
| | **134.03** | 13 | 23488 | 4.84 | 3.20 | 2.42 | 1.60 | X | X | X* | | | | | |

W + NEMA

* Caution - The motor power may exceed the gear unit's mechanical torque capacity
◈ The mechanical power limit of the solid input shaft type "W" may limit the reducer rating.
All ratings are mechanical. See page 14 for thermal considerations.

| lb | W | 56C | 140TC | 180TC | 210TC | 250TC | 280TC |
|---|---|---|---|---|---|---|---|
| **SK 5282** | 245 | 234 | 249 | 249 | 280 | 302 | 302 |


Send Quote Requests to info@automatedpt.com
Call +1(800)985-6929 To Order or Order Online At Nordgearmotors.com

# SK 5382, SK 5282/12
# NEMA-C + W
# Ratings & Combinations

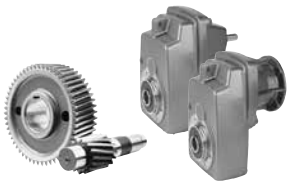

DRIVESYSTEMS



| Model Type | Gear Ratio | Output Speed | Output Torque* | Maximum input power◈ Solid input shafts type "W" | | | | NEMA C-Face* Available Combinations | | | | | | | |
|---|---|---|---|---|---|---|---|---|---|---|---|---|---|---|---|
| | | | | Input Speed | | | | | | | | | | | |
| | $i_{tot}$ | $n_2$ 1750 rpm | $T_{2\,max}$ | 1750 rpm | 1150 rpm | 875 rpm | 580 rpm | | | | | | | | |
| | | [rpm] | [lb-in] | [hp] | [hp] | [hp] | [hp] | 56C | 140TC | 180TC | 210TC | 250TC | 280TC | 320TC | 360TC |
| **SK 5382** | 82.72 | 21 | 24736 | 7.50 | 4.95 | 3.75 | 2.48 | X | X | X | X* | | | | |
| | 91.71 | 19 | 25665 | 7.50 | 4.95 | 3.75 | 2.48 | X | X | X | X* | | | | |
| | 117.37 | 15 | 24338 | 5.79 | 3.82 | 2.90 | 1.91 | X | X | X | X* | | | | |
| | 138.82 | 13 | 28320 | 5.84 | 3.86 | 2.92 | 1.93 | X | X | X | X* | | | | |
| | 153.92 | 11 | 28320 | 4.94 | 3.26 | 2.47 | 1.63 | X | X | X* | X* | | | | |
| | 171.27 | 10 | 24780 | 3.93 | 2.59 | 1.97 | 1.30 | X | X | X* | | | | | |
| | 202.57 | 8.6 | 28320 | 3.86 | 2.55 | 1.93 | 1.28 | X | X | X* | | | | | |
| | 248.70 | 7.0 | 28320 | 3.15 | 2.08 | 1.57 | 1.04 | X | X | X* | | | | | |
| | 269.99 | 6.5 | 23895 | 2.46 | 1.63 | 1.23 | 0.81 | X | X | X* | | | | | |
| | 331.48 | 5.3 | 28320 | 2.38 | 1.57 | 1.19 | 0.79 | X | X | X* | | | | | |
| | **361.69** | 4.8 | 24780 | 1.89 | 1.25 | 0.94 | 0.62 | X | X* | | | | | | |
| | **427.79** | 4.1 | 28320 | 1.84 | 1.22 | 0.92 | 0.61 | X | X* | | | | | | |
| | **525.20** | 3.3 | 28320 | 1.48 | 0.98 | 0.74 | 0.49 | X | X* | | | | | | |
| | **570.18** | 3.1 | 24780 | 1.22 | 0.80 | 0.61 | 0.40 | X | X* | | | | | | |
| | **700.03** | 2.5 | 28320 | 1.12 | 0.74 | 0.56 | 0.37 | X | X* | | | | | | |
| | **936.45** | 1.9 | 23895 | 0.72 | 0.48 | 0.36 | 0.24 | X* | X* | | | | | | |
| | **1367.08** | 1.3 | 23895 | 0.49 | 0.33 | 0.25 | 0.16 | X* | X* | | | | | | |
| **SK 5282/12** | 142.18 | 12 | 26550 | 5.00 | 3.30 | 2.50 | 1.65 | X | X | X | | | | | |
| | 174.55 | 10 | 26550 | 4.21 | 2.78 | 2.11 | 1.39 | X | X | X* | | | | | |
| | 232.66 | 7.5 | 26550 | 3.16 | 2.09 | 1.58 | 1.04 | X | X | X* | | | | | |
| | 273.15 | 6.4 | 26550 | 2.70 | 1.78 | 1.35 | 0.89 | X | X | X* | | | | | |
| | 338.35 | 5.2 | 26550 | 2.19 | 1.45 | 1.10 | 0.72 | X | X | X* | | | | | |
| | 448.15 | 3.9 | 26550 | 1.64 | 1.08 | 0.82 | 0.54 | X | X* | X* | | | | | |
| | 550.94 | 3.2 | 26550 | 1.35 | 0.89 | 0.67 | 0.44 | X | X* | X* | | | | | |
| | 689.45 | 2.5 | 26550 | 1.05 | 0.70 | 0.53 | 0.35 | X | X* | X* | | | | | |
| | 862.46 | 2.0 | 26550 | 0.90 | 0.59 | 0.45 | 0.30 | X* | X* | X* | | | | | |
| | 1095.71 | 1.6 | 26550 | 0.73 | 0.48 | 0.36 | 0.24 | X* | X* | | | | | | |
| | **1334.62** | 1.3 | 26550 | 0.60 | 0.40 | 0.30 | 0.20 | X* | X* | | | | | | |
| | **1805.75** | 0.97 | 26550 | 0.46 | 0.31 | 0.23 | 0.15 | X* | | | | | | | |
| | **2217.67** | 0.79 | 26550 | 0.39 | 0.26 | 0.19 | 0.13 | X* | | | | | | | |
| | **2772.22** | 0.63 | 26550 | 0.32 | 0.21 | 0.16 | 0.11 | X* | | | | | | | |

* Caution - The motor power may exceed the gear unit's mechanical torque capacity
◈ The mechanical power limit of the solid input shaft type "W" may limit the reducer rating.
All ratings are mechanical. See page 14 for thermal considerations.

| lb | W | 56C | 140TC | 180TC | 210TC |
|---|---|---|---|---|---|
| **SK 5382** | 265 | 260 | 269 | 278 | 278 |
| **SK 5282/12** | 231 | 326 | 243 | 258 | – |


Send Quote Requests to info@automatedpt.com
Call +1(800)985-6929 To Order or Order Online At Nordgearmotors.com

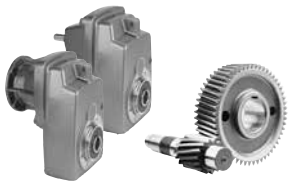

# SK 6282
# NEMA-C + W
# Ratings & Combinations

| Model Type | Gear Ratio | Output Speed | Output Torque* | Maximum input power◈ Solid input shafts type "W" | | | | NEMA C-Face* Available Combinations | | | | | | | |
|---|---|---|---|---|---|---|---|---|---|---|---|---|---|---|---|
| | | | | Input Speed | | | | | | | | | | | |
| | $i_{tot}$ | $n_2$ 1750 rpm | $T_{2\,max}$ | 1750 rpm | 1150 rpm | 875 rpm | 580 rpm | | | | | | | | |
| | | [rpm] | [lb-in] | [hp] | [hp] | [hp] | [hp] | 56C | 140TC | 180TC | 210TC | 250TC | 280TC | 320TC | 360TC |
| **SK 6282** | 4.39 | 399 | 18001 | 60.00 | 39.60 | 30.00 | 19.80 | | | | | X | X | X | X* |
| | 4.88 | 359 | 19081 | 60.00 | 39.60 | 30.00 | 19.80 | | | X | X | X | X | X | X* |
| | 5.50 | 318 | 20275 | 60.00 | 39.60 | 30.00 | 19.80 | | | X | X | X | X | X | X* |
| | 5.78 | 303 | 20656 | 60.00 | 39.60 | 30.00 | 19.80 | | | X | X | X | X | X | X* |
| | 5.99 | 292 | 21169 | 60.00 | 39.60 | 30.00 | 19.80 | | | | | X | X | X | X* |
| | 6.74 | 260 | 26462 | 60.00 | 39.60 | 30.00 | 19.80 | | | X | X | X | X | X | X* |
| | 7.82 | 224 | 23736 | 60.00 | 39.60 | 30.00 | 19.80 | | | X | X | X | X | X | X* |
| | 9.39 | 186 | 24373 | 60.00 | 39.60 | 30.00 | 19.80 | | | X | X | X | X | X | X* |
| | 10.64 | 164 | 38179 | 60.00 | 39.60 | 30.00 | 19.80 | | | X | X | X | X | X | X* |
| | 12.35 | 142 | 38843 | 60.00 | 39.60 | 30.00 | 19.80 | | | X | X | X | X | X | X* |
| | 14.83 | 118 | 39604 | 60.00 | 39.60 | 30.00 | 19.80 | | | X | X | X | X | X | X* |
| | 18.70 | 94 | 39179 | 58.43 | 38.57 | 29.22 | 19.28 | | | X | X | X | X | X | X* |
| | 22.95 | 76 | 40135 | 48.40 | 31.94 | 24.20 | 15.97 | | | X | X | X | X | X* | X* |
| | 26.05 | 67 | 40117 | 42.65 | 28.15 | 21.32 | 14.07 | | | X | X | X | X | | |
| | 29.90 | 59 | 40152 | 37.59 | 24.81 | 18.79 | 12.40 | | | X | X | X | X* | | |
| | **39.48** | 44 | 28320 | 19.77 | 13.05 | 9.89 | 6.52 | | | X | X | X* | X* | | |
| | **49.75** | 35 | 35754 | 19.86 | 13.10 | 9.93 | 6.55 | | | X | X | X* | X* | | |
| | **61.08** | 29 | 40135 | 18.47 | 12.19 | 9.23 | 6.09 | | | X | X | X* | X* | | |
| | **65.44** | 27 | 29816 | 12.77 | 8.43 | 6.39 | 4.22 | | | X | X | | | | |
| | **80.33** | 22 | 36559 | 12.76 | 8.42 | 6.38 | 4.21 | | | X | X | | | | |

* Caution - The motor power may exceed the gear unit's mechanical torque capacity
◈ The mechanical power limit of the solid input shaft type "W" may limit the reducer rating.
All ratings are mechanical. See page 14 for thermal considerations.

W + NEMA

| lb | W | 180TC | 210TC | 250TC | 280TC | 320TC | 360TC |
|---|---|---|---|---|---|---|---|
| **SK 6282** | 477 | 448 | 476 | 531 | 531 | 562 | 595 |


Send Quote Requests to info@automatedpt.com
Call +1(800)985-6929 To Order or Order Online At Nordgearmotors.com

# SK 6382, SK 6382/22, 6382/32 NEMA-C + W Ratings & Combinations

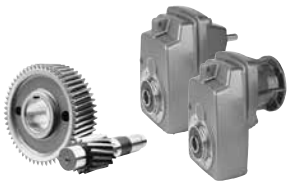

DRIVESYSTEMS



| Model Type | Gear Ratio | Output Speed | Output Torque* | Maximum input power◈ Solid input shafts type "W" | | | | NEMA C-Face* Available Combinations | | | | | | | |
|---|---|---|---|---|---|---|---|---|---|---|---|---|---|---|---|
| | | | | Input Speed | | | | | | | | | | | |
| | $i_{tot}$ | $n_2$ 1750 rpm | $T_{2\,max}$ | 1750 rpm | 1150 rpm | 875 rpm | 580 rpm | | | | | | | | |
| | | [rpm] | [lb-in] | [hp] | [hp] | [hp] | [hp] | 56C | 140TC | 180TC | 210TC | 250TC | 280TC | 320TC | 360TC |
| **SK 6382** | 24.42 | 72 | 41507 | 30.00 | 19.80 | 15.00 | 9.90 | X | X | X | X | X | X | | |
| | 28.72 | 61 | 40710 | 30.00 | 19.80 | 15.00 | 9.90 | X | X | X | X | X | X | | |
| | 30.91 | 57 | 40268 | 30.00 | 19.80 | 15.00 | 9.90 | X | X | X | X | X | X | | |
| | 36.34 | 48 | 40268 | 30.00 | 19.80 | 15.00 | 9.90 | X | X | X | X | X | X | | |
| | 42.46 | 41 | 40268 | 26.20 | 17.29 | 13.10 | 8.64 | X | X | X | X | X | X* | | |
| | 51.07 | 34 | 44958 | 24.25 | 16.01 | 12.13 | 8.00 | X | X | X | X | X | X* | | |
| | 59.66 | 29 | 48675 | 22.40 | 14.78 | 11.20 | 7.39 | X | X | X | X | X | X* | | |
| | 73.50 | 24 | 49295 | 18.77 | 12.39 | 9.39 | 6.19 | X | X | X | X | X* | | | |
| | 75.18 | 23 | 53100 | 19.38 | 12.79 | 9.69 | 6.39 | X | X | X | X | X* | X* | | |
| | 92.63 | 19 | 53100 | 16.01 | 10.57 | 8.00 | 5.28 | X | X | X | X | X* | | | |
| | 114.79 | 15 | 52038 | 12.39 | 8.17 | 6.19 | 4.09 | X | X | X | X | X* | | | |
| | 126.87 | 14 | 40533 | 9.00 | 5.94 | 4.50 | 2.97 | X | X | X | X* | | | | |
| | 159.88 | 11 | 51065 | 8.91 | 5.88 | 4.46 | 2.94 | X | X | X | X* | | | | |
| | **171.34** | 10 | 49295 | 7.82 | 5.16 | 3.91 | 2.58 | | | X | X* | | | | |
| | **212.33** | 8.2 | 41330 | 5.38 | 3.55 | 2.69 | 1.77 | | | X | X* | | | | |
| | **225.79** | 7.8 | 35577 | 4.40 | 2.91 | 2.20 | 1.45 | X | X | X* | | | | | |
| | **251.76** | 7.0 | 39648 | 4.40 | 2.91 | 2.20 | 1.45 | X | X | X* | | | | | |
| | **267.59** | 6.5 | 52038 | 5.37 | 3.54 | 2.68 | 1.77 | | | X | X* | | | | |
| | **317.28** | 5.5 | 49914 | 4.36 | 2.87 | 2.18 | 1.44 | X | X | X* | | | | | |
| | **393.19** | 4.5 | 52038 | 3.72 | 2.45 | 1.86 | 1.23 | X | X | X* | | | | | |
| | **445.09** | 3.9 | 36905 | 2.28 | 1.51 | 1.14 | 0.75 | X | X | | | | | | |
| | **551.58** | 3.2 | 45755 | 2.32 | 1.53 | 1.16 | 0.77 | X | X | | | | | | |
| **SK 6382/22** | 298.46 | 5.9 | 47790 | 4.47 | 2.95 | 2.24 | 1.48 | X | X | X* | | | | | |
| | 347.33 | 5.0 | 47790 | 3.79 | 2.50 | 1.90 | 1.25 | X | X | X* | | | | | |
| | 435.29 | 4.0 | 47790 | 3.03 | 2.00 | 1.52 | 1.00 | X | X | X* | | | | | |
| | 569.11 | 3.1 | 47790 | 2.35 | 1.55 | 1.18 | 0.78 | X | X | X* | | | | | |
| | 637.53 | 2.7 | 47790 | 2.05 | 1.35 | 1.02 | 0.68 | X | X | X* | | | | | |
| | 818.71 | 2.1 | 47790 | 1.59 | 1.05 | 0.80 | 0.53 | X | X* | X* | | | | | |
| | 1104.39 | 1.6 | 47790 | 1.21 | 0.80 | 0.61 | 0.40 | X | X* | X* | | | | | |
| | 1259.27 | 1.4 | 47790 | 1.06 | 0.70 | 0.53 | 0.35 | X | X* | X* | | | | | |
| | **1859.20** | 0.94 | 47790 | 0.77 | 0.51 | 0.38 | 0.25 | X* | X* | | | | | | |
| | **2203.53** | 0.79 | 47790 | 0.65 | 0.43 | 0.33 | 0.22 | X* | X* | | | | | | |
| | **2738.39** | 0.64 | 42303 | 0.48 | 0.32 | 0.24 | 0.16 | X* | X* | | | | | | |
| | **3450.76** | 0.51 | 47790 | 0.44 | 0.29 | 0.22 | 0.15 | X* | X* | | | | | | |
| | **4164.86** | 0.42 | 42303 | 0.34 | 0.22 | 0.17 | 0.11 | X* | X* | | | | | | |
| **SK 6382/32** | 159.23 | 11 | 42303 | 7.38 | 4.87 | 3.69 | 2.44 | X | X | X* | X* | | | | |
| | 191.51 | 9.1 | 42303 | 6.11 | 4.03 | 3.05 | 2.02 | X | X | X* | X* | | | | |
| | 223.73 | 7.8 | 42303 | 5.24 | 3.46 | 2.62 | 1.73 | X | X | X* | X* | | | | |

* Caution - The motor power may exceed the gear unit's mechanical torque capacity
◈ The mechanical power limit of the solid input shaft type "W" may limit the reducer rating.
All ratings are mechanical. See page 14 for thermal considerations.

| lb | W | 56C | 140TC | 180TC | 210TC | 250TC | 280TC |
|---|---|---|---|---|---|---|---|
| **SK 6382** | 423 | 403 | 412 | 428 | 459 | 481 | 481 |
| **SK 6382/22** | 443 | 439 | 448 | 456 | – | – | – |
| **SK 6382/32** | 467 | 463 | 472 | 481 | 500 | – | – |


Send Quote Requests to info@automatedpt.com
Call +1(800)985-6929 To Order or Order Online At Nordgearmotors.com

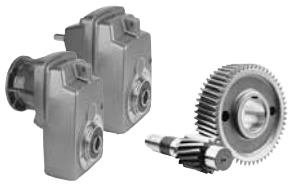

# SK 7282
# NEMA-C + W
# Ratings & Combinations

| Model Type | Gear Ratio | Output Speed | Output Torque* | Maximum input power◈ Solid input shafts type "W" | | | | NEMA C-Face* Available Combinations | | | | | | | |
|---|---|---|---|---|---|---|---|---|---|---|---|---|---|---|---|
| | | | | Input Speed | | | | | | | | | | | |
| | $i_{tot}$ | $n_2$ 1750 rpm | $T_{2\,max}$ | 1750 rpm | 1150 rpm | 875 rpm | 580 rpm | | | | | | | | |
| | | [rpm] | [lb-in] | [hp] | [hp] | [hp] | [hp] | 56C | 140TC | 180TC | 210TC | 250TC | 280TC | 320TC | 360TC |
| **SK 7282** | 4.26 | 411 | 32028 | 60.00 | 39.60 | 30.00 | 19.80 | | | X | X | X | X | X | X* |
| | 5.04 | 347 | 34772 | 60.00 | 39.60 | 30.00 | 19.80 | | | | | | | X | X* |
| | 5.30 | 330 | 35975 | 60.00 | 39.60 | 30.00 | 19.80 | | | X | X | X | X | X | X* |
| | 5.98 | 293 | 38250 | 60.00 | 39.60 | 30.00 | 19.80 | | | | | | | X | X* |
| | 6.36 | 275 | 39383 | 60.00 | 39.60 | 30.00 | 19.80 | | | X | X | X | X | X | X* |
| | 7.49 | 234 | 39887 | 60.00 | 39.60 | 30.00 | 19.80 | | | X | X | X | X | X | X* |
| | 8.66 | 202 | 37365 | 60.00 | 39.60 | 30.00 | 19.80 | | | X | X | X | X | X | X* |
| | 9.48 | 185 | 55428 | 60.00 | 39.60 | 30.00 | 19.80 | | | X | X | X | X | X | X* |
| | 9.92 | 176 | 37816 | 60.00 | 39.60 | 30.00 | 19.80 | | | X | X | X | X | X | X* |
| | 11.16 | 157 | 55056 | 60.00 | 39.60 | 30.00 | 19.80 | | | X | X | X | X | X | X* |
| | 12.89 | 136 | 51896 | 60.00 | 39.60 | 30.00 | 19.80 | | | X | X | X | X | X | X* |
| | 16.29 | 107 | 57251 | 60.00 | 39.60 | 30.00 | 19.80 | | | X | X | X | X | X | X* |
| | 19.97 | 88 | 51419 | 60.00 | 39.60 | 30.00 | 19.80 | | | X | X | X | X | X | X* |
| | 22.87 | 77 | 51348 | 60.00 | 39.60 | 30.00 | 19.80 | | | X | X | X | X | X | X* |
| | 26.89 | 65 | 51392 | 53.00 | 34.98 | 26.50 | 17.49 | | | X | X | X | X | X | X* |
| | 34.64 | 51 | 51365 | 41.57 | 27.43 | 20.78 | 13.72 | | | X | X | X | X | | |
| | **37.27** | 47 | 57286 | 42.72 | 28.20 | 21.36 | 14.10 | | | | | X | X | | |
| | **45.02** | 39 | 38781 | 24.00 | 15.84 | 12.00 | 7.92 | | | X | X | X | X | | |
| | **45.67** | 38 | 51410 | 31.00 | 20.46 | 15.50 | 10.23 | | | | | X | X | | |
| | **56.91** | 31 | 48976 | 24.09 | 15.90 | 12.04 | 7.95 | | | X | X | X | X* | | |
| | **69.73** | 25 | 51365 | 20.38 | 13.45 | 10.19 | 6.72 | | | X | X | X | X* | | |

* Caution - The motor power may exceed the gear unit's mechanical torque capacity
◈ The mechanical power limit of the solid input shaft type "W" may limit the reducer rating.
All ratings are mechanical. See page 14 for thermal considerations.

W + NEMA

| lb | W | 180TC | 210TC | 250TC | 280TC | 320TC | 360TC |
|---|---|---|---|---|---|---|---|
| **SK 7282** | 613 | 615 | 615 | 670 | 670 | 734 | 734 |


Send Quote Requests to info@automatedpt.com
Call +1(800)985-6929 To Order or Order Online At Nordgearmotors.com

# SK 7382, SK 7382/22, SK 7382/32 NEMA-C + W Ratings & Combinations

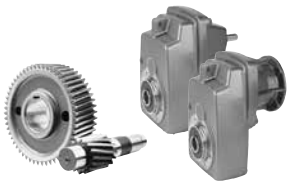

DRIVESYSTEMS



| Model Type | Gear Ratio | Output Speed | Output Torque* | Maximum input power◈ Solid input shafts type "W" | | | | NEMA C-Face* Available Combinations | | | | | | | |
|---|---|---|---|---|---|---|---|---|---|---|---|---|---|---|---|
| | | | | Input Speed | | | | | | | | | | | |
| | $i_{tot}$ | $n_2$ 1750 rpm | $T_{2\,max}$ | 1750 rpm | 1150 rpm | 875 rpm | 580 rpm | | | | | | | | |
| | | [rpm] | [lb-in] | [hp] | [hp] | [hp] | [hp] | 56C | 140TC | 180TC | 210TC | 250TC | 280TC | 320TC | 360TC |
| **SK 7382** | 23.46 | 75 | 58499 | 60.00 | 39.60 | 30.00 | 19.80 | | | X | X | X | X | X | X* |
| | 26.88 | 65 | 58587 | 60.00 | 39.60 | 30.00 | 19.80 | | | X | X | X | X | X | X* |
| | 30.42 | 58 | 58587 | 53.92 | 35.58 | 26.96 | 17.79 | | | X | X | X | X | X | X* |
| | 36.92 | 47 | 58587 | 43.69 | 28.84 | 21.85 | 14.42 | | | X | X | X | X | X* | X* |
| | 46.66 | 38 | 62658 | 37.78 | 24.93 | 18.89 | 12.47 | | | X | X | X | X | X* | X* |
| | 53.38 | 33 | 62658 | 32.81 | 21.65 | 16.40 | 10.83 | | | X | X | X | X | | |
| | 59.52 | 29 | 62481 | 28.75 | 18.97 | 14.37 | 9.49 | | | X | X | X | X* | X* | X* |
| | 68.10 | 26 | 63720 | 26.29 | 17.35 | 13.14 | 8.67 | | | X | X | X | X* | | |
| | 78.81 | 22 | 65667 | 22.92 | 15.13 | 11.46 | 7.56 | | | X | X | X | X* | | |
| | 93.18 | 19 | 66729 | 20.12 | 13.28 | 10.06 | 6.64 | | | X | X | X | X* | X* | X* |
| | 106.59 | 16 | 66729 | 16.94 | 11.18 | 8.47 | 5.59 | | | X | X | X* | X* | | |
| | 123.37 | 14 | 66729 | 14.82 | 9.78 | 7.41 | 4.89 | | | X | X | X* | X* | | |
| | 150.57 | 12 | 66729 | 12.71 | 8.39 | 6.35 | 4.19 | | | X | X | X* | | | |
| | 162.17 | 11 | 55490 | 9.68 | 6.39 | 4.84 | 3.20 | | | X | X* | | | | |
| | 204.99 | 8.5 | 66729 | 9.00 | 5.94 | 4.50 | 2.97 | | | X | X* | | | | |
| | **216.43** | 8.1 | 73455 | 9.44 | 6.23 | 4.72 | 3.12 | | | X | X* | | | | |
| | **273.57** | 6.4 | 66729 | 6.78 | 4.47 | 3.39 | 2.24 | | | X | X* | | | | |
| | **338.79** | 5.2 | 66729 | 5.51 | 3.63 | 2.75 | 1.82 | | | X | X* | | | | |
| **SK 7382/22** | 376.26 | 4.7 | 62658 | 4.67 | 3.08 | 2.34 | 1.54 | X | X | X* | X* | | | | |
| | 435.50 | 4.0 | 62658 | 3.98 | 2.62 | 1.99 | 1.31 | X | X | X* | X* | | | | |
| | 569.97 | 3.1 | 62658 | 3.08 | 2.03 | 1.54 | 1.02 | X | X | X* | X* | | | | |
| | 714.31 | 2.4 | 62658 | 2.39 | 1.57 | 1.19 | 0.79 | X | X | X* | X* | | | | |
| | 933.91 | 1.9 | 62658 | 1.89 | 1.25 | 0.94 | 0.62 | X | X* | X* | X* | | | | |
| | 1046.18 | 1.7 | 62658 | 1.69 | 1.12 | 0.85 | 0.56 | X | X* | X* | | | | | |
| | 1343.50 | 1.3 | 62658 | 1.29 | 0.85 | 0.65 | 0.43 | X | X* | X* | | | | | |
| | 1812.31 | 0.97 | 62658 | 1.02 | 0.67 | 0.51 | 0.34 | X | X* | X* | | | | | |
| | 2066.45 | 0.85 | 62658 | 0.90 | 0.59 | 0.45 | 0.30 | X* | X* | X* | | | | | |
| | **2635.97** | 0.66 | 62658 | 0.71 | 0.47 | 0.35 | 0.23 | X* | X* | | | | | | |
| | **3615.97** | 0.48 | 62658 | 0.53 | 0.35 | 0.27 | 0.18 | X* | X* | | | | | | |
| | **4892.48** | 0.36 | 62658 | 0.41 | 0.27 | 0.21 | 0.14 | X* | X* | | | | | | |
| | **5662.68** | 0.31 | 62658 | 0.36 | 0.24 | 0.18 | 0.12 | X* | X* | | | | | | |
| **SK 7382/32** | 223.20 | 7.8 | 62481 | 7.50 | 4.95 | 3.75 | 2.48 | X | X | X | X | | | | |
| | 295.54 | 5.9 | 62481 | 5.85 | 3.86 | 2.92 | 1.93 | X | X | X | X | | | | |

* Caution - The motor power may exceed the gear unit's mechanical torque capacity
◈ The mechanical power limit of the solid input shaft type "W" may limit the reducer rating.
All ratings are mechanical. See page 14 for thermal considerations.

| lb | W | 56C | 140TC | 180TC | 210TC | 250TC | 280TC | 320TC | 360TC |
|---|---|---|---|---|---|---|---|---|---|
| **SK 7382** | 628 | – | – | 602 | 631 | 686 | 686 | 750 | 750 |
| **SK 7382/22** | 604 | 600 | 608 | 617 | 617 | – | – | – | – |
| **SK 7382/32** | 628 | 633 | 642 | 661 | 661 | – | – | – | – |


Send Quote Requests to info@automatedpt.com
Call +1(800)985-6929 To Order or Order Online At Nordgearmotors.com

Send Quote Requests to info@automatedpt.com Call +1(800)985-6929 To Order or Order Online At Nordgearmotors.com

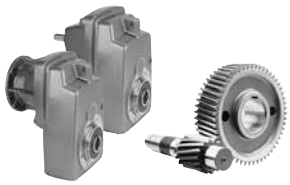

# SK 8282 NEMA-C + W Ratings & Combinations

| Model Type | Gear Ratio | Output Speed | Output Torque* | Maximum input power◈ Solid input shafts type "W" | | | | NEMA C-Face* Available Combinations | | | | | | | |
|---|---|---|---|---|---|---|---|---|---|---|---|---|---|---|---|
| | | | | Input Speed | | | | | | | | | | | |
| | $i_{tot}$ | $n_2$ 1750 rpm | $T_{2\,max}$ | 1750 rpm | 1150 rpm | 875 rpm | 580 rpm | | | | | | | | |
| | | [rpm] | [lb-in] | [hp] | [hp] | [hp] | [hp] | 56C | 140TC | 180TC | 210TC | 250TC | 280TC | 320TC | 360TC |
| **SK 8282** | 4.52 | 387 | 43277 | 100.00 | 66.00 | 50.00 | 33.00 | | | X | X | X | X | X | X |
| | 6.92 | 253 | 60056 | 100.00 | 66.00 | 50.00 | 33.00 | | | X | X | X | X | X | X |
| | 8.26 | 212 | 64570 | 100.00 | 66.00 | 50.00 | 33.00 | | | X | X | X | X | X | X |
| | 9.67 | 181 | 57711 | 100.00 | 66.00 | 50.00 | 33.00 | | | X | X | X | X | X | X |
| | 10.86 | 161 | 91067 | 100.00 | 66.00 | 50.00 | 33.00 | | | X | X | X | X | X | X |
| | 12.96 | 135 | 91102 | 100.00 | 66.00 | 50.00 | 33.00 | | | X | X | X | X | X | X |
| | 15.18 | 115 | 83898 | 100.00 | 66.00 | 50.00 | 33.00 | | | X | X | X | X | X | X |
| | 17.40 | 101 | 85818 | 100.00 | 66.00 | 50.00 | 33.00 | | | X | X | X | X | X | X |
| | 21.13 | 83 | 93969 | 100.00 | 66.00 | 50.00 | 33.00 | | | X | X | X | X | X | X |
| | 24.50 | 71 | 93837 | 100.00 | 66.00 | 50.00 | 33.00 | | | X | X | X | X | X | X |
| | 28.33 | 62 | 88482 | 87.04 | 57.45 | 43.52 | 28.72 | | | X | X | X | X | X | X |
| | **32.24** | 54 | 91562 | 78.45 | 51.78 | 39.23 | 25.89 | | | | | | | X | X* |
| | **39.11** | 45 | 82677 | 59.03 | 38.96 | 29.52 | 19.48 | | | | | X | X | | |
| | **39.16** | 45 | 93943 | 67.08 | 44.27 | 33.54 | 22.13 | | | | | | | X | X* |
| | **47.51** | 37 | 93925 | 55.14 | 36.39 | 27.57 | 18.20 | | | | | X | X* | | |
| | **59.44** | 29 | 57375 | 26.40 | 17.42 | 13.20 | 8.71 | | | X | X | X | X* | | |
| | **72.21** | 24 | 69694 | 26.54 | 17.52 | 13.27 | 8.76 | | | X | X | X | X* | | |

* Caution - The motor power may exceed the gear unit's mechanical torque capacity
◈ The mechanical power limit of the solid input shaft type "W" may limit the reducer rating.
All ratings are mechanical. See page 14 for thermal considerations.

W + NEMA

| lb | W | 180TC | 210TC | 250TC | 280TC | 320TC | 360TC |
|---|---|---|---|---|---|---|---|
| **SK 8282** | 1060 | 897 | 952 | 952 | 983 | 1016 | 1138 |


Send Quote Requests to info@automatedpt.com
Call +1(800)985-6929 To Order or Order Online At Nordgearmotors.com

# SK 8382, SK 8382/32
# SK 8382/42 NEMA-C + W
# Ratings & Combinations

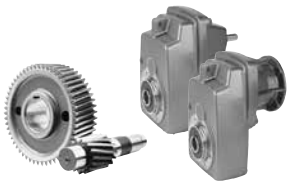

DRIVESYSTEMS



| Model Type | Gear Ratio | Output Speed | Output Torque* | Maximum input power◈ Solid input shafts type "W" | | | | NEMA C-Face* Available Combinations | | | | | | | |
|---|---|---|---|---|---|---|---|---|---|---|---|---|---|---|---|
| | | | | Input Speed | | | | | | | | | | | |
| | $i_{tot}$ | $n_2$ 1750 rpm | $T_{2\,max}$ | 1750 rpm | 1150 rpm | 875 rpm | 580 rpm | | | | | | | | |
| | | [rpm] | [lb-in] | [hp] | [hp] | [hp] | [hp] | 56C | 140TC | 180TC | 210TC | 250TC | 280TC | 320TC | 360TC |
| **SK 8382** | 30.92 | 57 | 106997 | 60.00 | 39.60 | 30.00 | 19.80 | | | X | X | X | X | X | X* |
| | 35.88 | 49 | 106908 | 60.00 | 39.60 | 30.00 | 19.80 | | | X | X | X | X | X | X* |
| | 43.59 | 40 | 93810 | 59.54 | 39.30 | 29.77 | 19.65 | | | X | X | X | X | X | X* |
| | 47.80 | 37 | 107085 | 60.00 | 39.60 | 30.00 | 19.80 | | | X | X | X | X | X | X* |
| | 57.43 | 30 | 107085 | 50.97 | 33.64 | 25.49 | 16.82 | | | X | X | X | X | X | X* |
| | 65.22 | 27 | 100005 | 42.84 | 28.28 | 21.42 | 14.14 | | | X | X | X | X | X* | X* |
| | 75.69 | 23 | 107085 | 39.08 | 25.79 | 19.54 | 12.90 | | | X | X | X | X | X* | X* |
| | 90.94 | 19 | 107085 | 32.28 | 21.31 | 16.14 | 10.65 | | | X | X | X | X | X* | X* |
| | 103.21 | 17 | 107085 | 28.88 | 19.06 | 14.44 | 9.53 | | | X | X | X | X* | | |
| | 118.47 | 15 | 110183 | 26.22 | 17.31 | 13.11 | 8.65 | | | X | X | X | X* | | |
| | 125.38 | 14 | 107882 | 23.96 | 15.82 | 11.98 | 7.91 | | | X | X | X | X* | | |
| | 143.91 | 12 | 110625 | 21.06 | 13.90 | 10.53 | 6.95 | | | X | X | X | X* | | |
| | **152.83** | 11 | 116820 | 20.39 | 13.46 | 10.19 | 6.73 | | | X | X | X | X* | | |
| | **185.66** | 9.4 | 112218 | 16.74 | 11.05 | 8.37 | 5.52 | | | X | X | X* | X* | | |
| | **201.00** | 8.7 | 95580 | 13.19 | 8.71 | 6.60 | 4.35 | | | X | X | | | | |
| | **242.02** | 7.2 | 115935 | 13.24 | 8.74 | 6.62 | 4.37 | | | X | X | X* | X* | | |
| | **294.01** | 6.0 | 112395 | 10.70 | 7.06 | 5.35 | 3.53 | | | X | X | X* | X* | | |
| | **318.31** | 5.5 | 115050 | 10.04 | 6.63 | 5.02 | 3.31 | | | X | X | | | | |
| | **386.68** | 4.5 | 112395 | 8.03 | 5.30 | 4.01 | 2.65 | | | X | X* | | | | |
| **SK 8382/32** | 612.94 | 2.9 | 107085 | 4.93 | 3.25 | 2.46 | 1.63 | X | X | X* | X* | | | | |
| | 718.43 | 2.4 | 107085 | 4.08 | 2.69 | 2.04 | 1.35 | X | X | X* | X* | | | | |
| | 891.21 | 2.0 | 107085 | 3.40 | 2.24 | 1.70 | 1.12 | X | X | X* | X* | | | | |
| | 1064.91 | 1.6 | 107085 | 2.72 | 1.79 | 1.36 | 0.90 | X | X | X* | X* | | | | |
| | 1366.83 | 1.3 | 107085 | 2.21 | 1.46 | 1.10 | 0.73 | X | X | X* | X* | | | | |
| | 1697.85 | 1.0 | 107085 | 1.70 | 1.12 | 0.85 | 0.56 | X | X* | X* | X* | | | | |
| | **2416.28** | 0.72 | 107085 | 1.22 | 0.81 | 0.61 | 0.40 | X | X* | X* | | | | | |
| | **3005.57** | 0.58 | 107085 | 1.04 | 0.69 | 0.52 | 0.34 | X | X* | | | | | | |
| | **3524.83** | 0.50 | 107085 | 0.90 | 0.60 | 0.45 | 0.30 | X* | X* | | | | | | |
| | **4211.43** | 0.42 | 107085 | 0.77 | 0.51 | 0.38 | 0.25 | X* | X* | | | | | | |
| | **5507.20** | 0.32 | 107085 | 0.60 | 0.39 | 0.30 | 0.20 | X* | X* | | | | | | |
| | **6616.79** | 0.26 | 107085 | 0.50 | 0.33 | 0.25 | 0.16 | X* | X* | | | | | | |
| **SK 8382/42** | 185.94 | 9.4 | 107085 | 10.00 | 6.60 | 5.00 | 3.30 | X | X | X | X | X* | X* | | |
| | 223.40 | 7.8 | 107085 | 10.00 | 6.60 | 5.00 | 3.30 | X | X | X | X | X* | X* | | |
| | 294.43 | 5.9 | 107085 | 10.00 | 6.60 | 5.00 | 3.30 | X | X | X | X | X* | X* | | |
| | 346.66 | 5.0 | 107085 | 8.50 | 5.61 | 4.25 | 2.80 | X | X | X | X* | X* | X* | | |
| | 468.52 | 3.7 | 107085 | 6.29 | 4.15 | 3.14 | 2.07 | X | X | X | X* | X* | X* | | |
| | 551.02 | 3.2 | 107085 | 5.44 | 3.59 | 2.72 | 1.79 | X | X | X | X* | X* | X* | | |

* Caution - The motor power may exceed the gear unit's mechanical torque capacity
◈ The mechanical power limit of the solid input shaft type "W" may limit the reducer rating.
All ratings are mechanical. See page 14 for thermal considerations.

| lb | W | 56C | 140TC | 180TC | 210TC | 250TC | 280TC | 320TC | 360TC |
|---|---|---|---|---|---|---|---|---|---|
| **SK 8382** | 904 | – | – | 877 | 906 | 961 | 961 | 992 | 1025 |
| **SK 8382/32** | 904 | 908 | 908 | 908 | 908 | – | – | – | – |
| **SK 8382/42** | 959 | 948 | 948 | 963 | 994 | 995 | 1017 | – | – |


Send Quote Requests to info@automatedpt.com
Call +1(800)985-6929 To Order or Order Online At Nordgearmotors.com

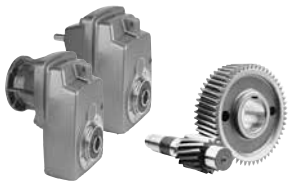

# SK 9282, SK9382, SK 9382/42 SK 9382/52 NEMA-C + W Ratings & Combinations

| Model Type | Gear Ratio | Output Speed | Output Torque* | Maximum input power◈ Solid input shafts type "W" | | | | NEMA C-Face* Available Combinations | | | | | | | |
|---|---|---|---|---|---|---|---|---|---|---|---|---|---|---|---|
| | | | | Input Speed | | | | | | | | | | | |
| | $i_{tot}$ | $n_2$ 1750 rpm | $T_{2\,max}$ | 1750 rpm | 1150 rpm | 875 rpm | 580 rpm | | | | | | | | |
| | | [rpm] | [lb-in] | [hp] | [hp] | [hp] | [hp] | 56C | 140TC | 180TC | 210TC | 250TC | 280TC | 320TC | 360TC |
| **SK 9282** | 5.34 | 328 | 73774 | 200.00 | 132.00 | 100.00 | 66.00 | | | | | | | | X |
| | 5.78 | 303 | 78101 | 200.00 | 132.00 | 100.00 | 66.00 | | | X | X | X | X | X | X |
| | 7.06 | 248 | 89527 | 200.00 | 132.00 | 100.00 | 66.00 | | | X | X | X | X | X | X |
| | 8.64 | 203 | 98766 | 200.00 | 132.00 | 100.00 | 66.00 | | | X | X | X | X | X | X |
| | 10.18 | 172 | 95509 | 200.00 | 132.00 | 100.00 | 66.00 | | | X | X | X | X | X | X |
| | 12.01 | 146 | 122201 | 200.00 | 132.00 | 100.00 | 66.00 | | | X | X | X | X | X | X |
| | 14.70 | 119 | 130228 | 200.00 | 132.00 | 100.00 | 66.00 | | | X | X | X | X | X | X |
| | 17.33 | 101 | 137104 | 200.00 | 132.00 | 100.00 | 66.00 | | | X | X | X | X | X | X |
| | 20.13 | 87 | 140945 | 194.56 | 128.41 | 97.28 | 64.21 | | | X | X | X | X | X | X |
| | 23.15 | 76 | 145370 | 175.30 | 115.70 | 87.65 | 57.85 | | | X | X | X | X | X | X |
| | 26.89 | 65 | 152220 | 156.99 | 103.61 | 78.50 | 51.81 | | | X | X | X | X | X | X |
| | 30.79 | 57 | 158681 | 143.51 | 94.72 | 71.76 | 47.36 | | | X | X | X | X | X | X |
| | 34.38 | 51 | 143813 | 116.37 | 76.81 | 58.19 | 38.40 | | | X | X | X | X | X | X |
| **SK 9382** | 35.61 | 49 | 212400 | 100.00 | 66.00 | 50.00 | 33.00 | | | X | X | X | X | X | X |
| | 41.93 | 42 | 212400 | 100.00 | 66.00 | 50.00 | 33.00 | | | X | X | X | X | X | X |
| | 48.44 | 36 | 212400 | 100.00 | 66.00 | 50.00 | 33.00 | | | X | X | X | X | X | X |
| | 55.49 | 32 | 212400 | 100.00 | 66.00 | 50.00 | 33.00 | | | X | X | X | X | X | X |
| | 65.25 | 27 | 214701 | 91.98 | 60.71 | 45.99 | 30.35 | | | X | X | X | X | X | X |
| | 72.19 | 24 | 212400 | 80.88 | 53.38 | 40.44 | 26.69 | | | X | X | X | X | X | X |
| | 83.19 | 21 | 212400 | 70.77 | 46.71 | 35.39 | 23.35 | | | X | X | X | X | X | X* |
| | 100.89 | 17 | 224790 | 60.63 | 40.02 | 30.32 | 20.01 | | | X | X | X | X | X | X* |
| | 115.57 | 15 | 224790 | 53.50 | 35.31 | 26.75 | 17.66 | | | X | X | X | X | X | X* |
| | 135.90 | 13 | 224790 | 46.37 | 30.60 | 23.18 | 15.30 | | | X | X | X | X | X* | X* |
| | 144.69 | 12 | 212400 | 40.44 | 26.69 | 20.22 | 13.35 | | | X | X | X | X | | |
| | 175.05 | 10 | 224790 | 35.67 | 23.54 | 17.83 | 11.77 | | | X | X | X | X | | |
| | **204.68** | 8.5 | 194700 | 26.26 | 17.33 | 13.13 | 8.67 | | | X | X | X | X* | | |
| | **291.25** | 6.0 | 212400 | 20.22 | 13.35 | 10.11 | 6.67 | | | X | X | X | X* | | |
| | **352.36** | 5.0 | 224790 | 17.83 | 11.77 | 8.92 | 5.89 | | | X | X | X* | X* | | |
| **SK 9382/42** | 449.57 | 3.9 | 212400 | 10.00 | 6.60 | 5.00 | 3.30 | X | X | X | X | X* | | | |
| | 618.30 | 2.8 | 212400 | 9.44 | 6.23 | 4.72 | 3.11 | X | X | X | X* | X* | | | |
| | 715.38 | 2.4 | 212400 | 8.09 | 5.34 | 4.04 | 2.67 | X | X | X | X* | X* | | | |
| | 886.49 | 2.0 | 212400 | 6.74 | 4.45 | 3.37 | 2.22 | X | X | X | X* | X* | | | |
| | 1178.81 | 1.5 | 212400 | 5.06 | 3.34 | 2.53 | 1.67 | X | X | X | X* | X* | | | |
| | 1419.20 | 1.2 | 212400 | 4.04 | 2.67 | 2.02 | 1.33 | X | X | X* | X* | X* | | | |
| | 1747.42 | 1.0 | 212400 | 3.37 | 2.22 | 1.69 | 1.11 | X | X | X* | X* | X* | | | |
| | 2203.92 | 0.79 | 212400 | 2.66 | 1.76 | 1.33 | 0.88 | X | X | X* | X* | | | | |
| | 2435.06 | 0.72 | 212400 | 2.43 | 1.60 | 1.21 | 0.80 | X | X | X* | X* | | | | |
| | **4165.75** | 0.42 | 212400 | 1.42 | 0.93 | 0.71 | 0.47 | | | X* | X* | | | | |
| **SK 9382/52** | 200.69 | 8.7 | 212400 | 25.00 | 16.50 | 12.50 | 8.25 | | | | | X | X* | | |
| | 233.17 | 7.5 | 212400 | 25.00 | 16.50 | 12.50 | 8.25 | | | | | X | X* | | |
| | 294.54 | 5.9 | 212400 | 19.88 | 13.12 | 9.94 | 6.56 | | | X | X | X* | X* | | |
| | 411.63 | 4.3 | 212400 | 14.49 | 9.56 | 7.25 | 4.78 | | | X | X | X* | X* | | |

* Caution - The motor power may exceed the gear unit's mechanical torque capacity
◈ The mechanical power limit of the solid input shaft type "W" may limit the reducer rating.
All ratings are mechanical. See page 14 for thermal considerations.

| lb | W | 56C | 140TC | 180TC | 210TC | 250TC | 280TC | 320TC | 360TC |
|---|---|---|---|---|---|---|---|---|---|
| **SK 9282** | 1724 | – | – | 1604 | 1604 | 1618 | 1618 | 1680 | 1801 |
| **SK 9382** | 1570 | – | – | 1615 | 1615 | 1629 | 1629 | 1691 | 1812 |
| **SK 9382/42** | 1625 | 1614 | 1629 | 1629 | 1660 | – | – | – | – |
| **SK 9382/52** | 1689 | – | – | 1693 | 1724 | 1746 | 1746 | – | – |


Send Quote Requests to info@automatedpt.com
Call +1(800)985-6929 To Order or Order Online At Nordgearmotors.com

# SK 10282, SK 10382
# SK 10382/52 NEMA-C + W
# Ratings & Combinations

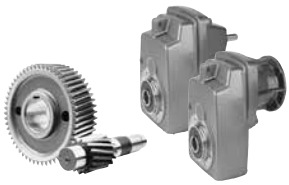

DRIVESYSTEMS



| Model Type | Gear Ratio | Output Speed | Output Torque* | Maximum input power◈ Solid input shafts type "W" | | | | NEMA C-Face* Available Combinations | | | | | | | |
|---|---|---|---|---|---|---|---|---|---|---|---|---|---|---|---|
| | | | | Input Speed | | | | | | | | | | | |
| | $i_{tot}$ | $n_2$ 1750 rpm | $T_{2\,max}$ | 1750 rpm | 1150 rpm | 875 rpm | 580 rpm | | | | | | | | |
| | | [rpm] | [lb-in] | [hp] | [hp] | [hp] | [hp] | 56C | 140TC | 180TC | 210TC | 250TC | 280TC | 320TC | 360TC |
| **SK 10282** | 5.20 | 337 | 168150 | 200.00 | 132.00 | 100.00 | 66.00 | | | | | | | | X |
| | 5.80 | 302 | 168150 | 200.00 | 132.00 | 100.00 | 66.00 | | | | | | | | X |
| | 6.74 | 260 | 168150 | 200.00 | 132.00 | 100.00 | 66.00 | | | | | | | | X |
| | 7.58 | 231 | 168150 | 200.00 | 132.00 | 100.00 | 66.00 | | | | | | | | X |
| | 8.24 | 212 | 265500 | 200.00 | 132.00 | 100.00 | 66.00 | | | | | | | | X |
| | 9.20 | 190 | 265500 | 200.00 | 132.00 | 100.00 | 66.00 | | | | | | | | X |
| | 10.42 | 168 | 283200 | 200.00 | 132.00 | 100.00 | 66.00 | | | | | | | | X |
| | 11.63 | 150 | 283200 | 200.00 | 132.00 | 100.00 | 66.00 | | | | | | | | X |
| | 13.50 | 130 | 283200 | 200.00 | 132.00 | 100.00 | 66.00 | | | | | | | | X |
| | 15.19 | 115 | 283200 | 200.00 | 132.00 | 100.00 | 66.00 | | | | | | | | X |
| | 18.24 | 96 | 283200 | 200.00 | 132.00 | 100.00 | 66.00 | | | | | | | | X |
| **SK 10382** | 21.00 | 83 | 292050 | 200.00 | 132.00 | 100.00 | 66.00 | | | | | X | X | X | X |
| | 23.58 | 74 | 292050 | 200.00 | 132.00 | 100.00 | 66.00 | | | | | X | X | X | X |
| | 27.18 | 64 | 292050 | 200.00 | 132.00 | 100.00 | 66.00 | | | | | X | X | X | X |
| | 29.79 | 59 | 309750 | 200.00 | 132.00 | 100.00 | 66.00 | | | | | X | X | X | X |
| | 34.35 | 51 | 309750 | 200.00 | 132.00 | 100.00 | 66.00 | | | | | X | X | X | X |
| | 41.00 | 43 | 309750 | 200.00 | 132.00 | 100.00 | 66.00 | | | | | X | X | X | X |
| | 47.95 | 36 | 309750 | 176.93 | 116.77 | 88.47 | 58.39 | | | | | X | X | X | X |
| | 56.76 | 31 | 309750 | 152.36 | 100.56 | 76.18 | 50.28 | | | | | X | X | X | X |
| | 65.44 | 27 | 310635 | 133.08 | 87.83 | 66.54 | 43.92 | | | | | X | X | X | X |
| | 72.71 | 24 | 329220 | 125.37 | 82.74 | 62.68 | 41.37 | | | | | X | X | X | X |
| | 91.35 | 19 | 313113 | 94.39 | 62.30 | 47.20 | 31.15 | | | | | X | X | X | X |
| | 104.71 | 17 | 312405 | 84.27 | 55.62 | 42.13 | 27.81 | | | | | X | X | X | X |
| | 140.41 | 12 | 313998 | 59.79 | 39.46 | 29.89 | 19.73 | | | | | X | X | X | |
| | 168.16 | 10 | 309750 | 49.15 | 32.44 | 24.57 | 16.22 | | | | | X | X | | |
| | 180.68 | 9.7 | 309750 | 47.67 | 31.46 | 23.84 | 15.73 | | | | | X | X | | |
| | **263.25** | 6.6 | 292050 | 30.58 | 20.19 | 15.29 | 10.09 | | | | | X | X | | |
| | **282.85** | 6.2 | 292050 | 28.73 | 18.96 | 14.37 | 9.48 | | | | | X | X* | | |
| | **332.64** | 5.3 | 327450 | 27.54 | 18.17 | 13.77 | 9.09 | | | | | X | X* | | |
| | **357.40** | 4.9 | 313821 | 24.40 | 16.10 | 12.20 | 8.05 | | | | | X | X* | | |
| **SK 10382/52** | 301.68 | 5.8 | 309750 | 28.51 | 18.81 | 14.25 | 9.41 | | | X | X | X | X* | | |
| | 366.46 | 4.8 | 309750 | 23.59 | 15.57 | 11.80 | 7.78 | X | X | X | X | X | X* | | |
| | 475.75 | 3.7 | 309750 | 18.18 | 12.00 | 9.09 | 6.00 | | | X | X | X* | X* | | |
| | 577.84 | 3.0 | 309750 | 14.74 | 9.73 | 7.37 | 4.87 | X | X | X | X | X* | X* | | |
| | 692.36 | 2.5 | 309750 | 12.29 | 8.11 | 6.14 | 4.05 | X | X | X | X | X* | X* | | |
| | 916.16 | 1.9 | 309750 | 9.34 | 6.16 | 4.67 | 3.08 | X | X | X | X* | X* | X* | | |
| | 1165.49 | 1.5 | 309750 | 7.37 | 4.87 | 3.69 | 2.43 | X | X | X | X* | X* | X* | | |
| | 1418.74 | 1.2 | 309750 | 5.90 | 3.89 | 2.95 | 1.95 | X | X | X | X* | X* | X* | | |
| | **1887.94** | 0.93 | 309750 | 4.57 | 3.02 | 2.29 | 1.51 | | | X* | X* | | | | |
| | **2401.00** | 0.73 | 309750 | 3.59 | 2.37 | 1.79 | 1.18 | | | X* | X* | | | | |
| | **2795.70** | 0.63 | 309750 | 3.10 | 2.04 | 1.55 | 1.02 | | | X* | X* | | X* | | |
| | **3521.33** | 0.50 | 309750 | 2.46 | 1.62 | 1.23 | 0.81 | | | X* | X* | | X* | | |
| | **4671.76** | 0.37 | 309750 | 1.82 | 1.20 | 0.91 | 0.60 | X | X* | X* | | | | | |

* Caution - The motor power may exceed the gear unit's mechanical torque capacity
◈ The mechanical power limit of the solid input shaft type "W" may limit the reducer rating.
All ratings are mechanical. See page 14 for thermal considerations.

| lb | W | 56C | 140TC | 180TC | 210TC | 250TC | 280TC | 320TC | 360TC |
|---|---|---|---|---|---|---|---|---|---|
| **SK 10282** | 2824 | – | – | – | – | – | – | – | 3177 |
| **SK 10382** | 2879 | – | – | 2870 | 2870 | 2901 | 2901 | 3056 | 3231 |
| **SK 10382/52** | 2932 | 2921 | 2937 | 2967 | 2967 | 2989 | 2989 | – | – |


Send Quote Requests to info@automatedpt.com
Call +1(800)985-6929 To Order or Order Online At Nordgearmotors.com

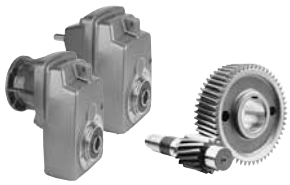

# SK 11282 , SK 11382, SK 11382/52
# SK 12382 NEMA-C + W
# Ratings & Combinations



| Model Type | Gear Ratio | Output Speed | Output Torque* | Maximum input power◈ Solid input shafts type "W" | | | | NEMA C-Face* Available Combinations | | | | | | | |
|---|---|---|---|---|---|---|---|---|---|---|---|---|---|---|---|
| | | | | Input Speed | | | | | | | | | | | |
| | $i_{tot}$ | $n_2$ 1750 rpm | $T_{2\,max}$ | 1750 rpm | 1150 rpm | 875 rpm | 580 rpm | | | | | | | | |
| | | [rpm] | [lb-in] | [hp] | [hp] | [hp] | [hp] | 56C | 140TC | 180TC | 210TC | 250TC | 280TC | 320TC | 360TC |
| **SK 11282** | 7.67 | 228 | 212400 | 200.00 | 132.00 | 100.00 | 66.00 | | | | | | | | X |
| | 8.58 | 204 | 219480 | 200.00 | 132.00 | 100.00 | 66.00 | | | | | | | | X |
| | 10.05 | 174 | 230100 | 200.00 | 132.00 | 100.00 | 66.00 | | | | | | | | X |
| | 11.96 | 146 | 232755 | 200.00 | 132.00 | 100.00 | 66.00 | | | | | | | | X |
| | 14.04 | 125 | 235410 | 200.00 | 132.00 | 100.00 | 66.00 | | | | | | | | X |
| | 16.33 | 107 | 371700 | 200.00 | 132.00 | 100.00 | 66.00 | | | | | | | | X |
| | 18.27 | 96 | 371700 | 200.00 | 132.00 | 100.00 | 66.00 | | | | | | | | X |
| | 21.42 | 82 | 371700 | 200.00 | 132.00 | 100.00 | 66.00 | | | | | | | | X |
| | 25.47 | 69 | 371700 | 200.00 | 132.00 | 100.00 | 66.00 | | | | | | | | X |
| | 29.92 | 58 | 371700 | 200.00 | 132.00 | 100.00 | 66.00 | | | | | | | | X |
| | 34.85 | 50 | 371700 | 200.00 | 132.00 | 100.00 | 66.00 | | | | | | | | X |
| **SK 11382** | 31.96 | 55 | 531000 | 200.00 | 132.00 | 100.00 | 66.00 | | | | | X | X | X | X |
| | 38.21 | 46 | 531000 | 200.00 | 132.00 | 100.00 | 66.00 | | | | | X | X | X | X |
| | 46.64 | 38 | 531000 | 200.00 | 132.00 | 100.00 | 66.00 | | | | | X | X | X | X |
| | 54.26 | 32 | 531000 | 200.00 | 132.00 | 100.00 | 66.00 | | | | | X | X | X | X |
| | 63.44 | 28 | 531000 | 200.00 | 132.00 | 100.00 | 66.00 | | | | | X | X | X | X |
| | 77.01 | 23 | 550028 | 200.00 | 132.00 | 100.00 | 66.00 | | | | | X | X | X | X |
| | 92.07 | 19 | 578790 | 174.49 | 115.16 | 87.24 | 57.58 | | | | | X | X | X | X |
| | 112.38 | 16 | 610650 | 155.02 | 102.32 | 77.51 | 51.16 | | | | | X | X | X | X |
| | 130.73 | 13 | 610650 | 125.96 | 83.13 | 62.98 | 41.57 | | | | | X | X | X | X |
| | 152.87 | 11 | 610650 | 106.58 | 70.34 | 53.29 | 35.17 | | | | | X | X | X | X |
| | 171.96 | 10 | 610650 | 96.89 | 63.95 | 48.45 | 31.97 | | | | | X | X | X | X |
| | 224.76 | 7.8 | 610650 | 75.57 | 49.88 | 37.79 | 24.94 | | | | | X | X | X | X |
| **SK 11382/52** | 297.39 | 5.9 | 442500 | 30.00 | 19.80 | 15.00 | 9.90 | | | | | X | X | | |
| | 312.46 | 5.6 | 442500 | 30.00 | 19.80 | 15.00 | 9.90 | | | | | X | X | | |
| | 363.43 | 4.8 | 442500 | 30.00 | 19.80 | 15.00 | 9.90 | | | | | X | X | | |
| | 479.78 | 3.6 | 531000 | 30.00 | 19.80 | 15.00 | 9.90 | | | | | X | X | | |
| | 602.67 | 2.9 | 531000 | 24.43 | 16.13 | 12.22 | 8.06 | | | X | X | X | X* | | |
| | 732.09 | 2.4 | 531000 | 20.22 | 13.35 | 10.11 | 6.67 | X | X | X | X | X | X* | | |
| | 962.98 | 1.8 | 531000 | 15.17 | 10.01 | 7.58 | 5.00 | X | X | X | X | X* | X* | | |
| | 1154.35 | 1.5 | 531000 | 12.64 | 8.34 | 6.32 | 4.17 | X | X | X | X | X* | X* | | |
| | 1383.12 | 1.3 | 531000 | 10.95 | 7.23 | 5.48 | 3.61 | X | X | X | X | X* | X* | | |
| | 1830.22 | 0.96 | 531000 | 8.09 | 5.34 | 4.04 | 2.67 | X | X | X | X* | X* | X* | | |
| | 2323.30 | 0.75 | 531000 | 6.32 | 4.17 | 3.16 | 2.09 | X | X | X | X* | X* | X* | | |
| | 3062.61 | 0.57 | 531000 | 4.80 | 3.17 | 2.40 | 1.58 | X | X | X* | X* | X* | X* | | |
| | 3728.09 | 0.47 | 531000 | 3.96 | 2.61 | 1.98 | 1.31 | X | X | X* | X* | X* | X* | | |
| | 4001.51 | 0.44 | 531000 | 3.71 | 2.45 | 1.85 | 1.22 | X | X | X* | X* | | | | |
| **SK 12382** | 69.12 | 25 | 796500 | 200.00 | 132.00 | 100.00 | 66.00 | | | | | X | X | X | X |
| | 82.65 | 21 | 796500 | 200.00 | 132.00 | 100.00 | 66.00 | | | | | X | X | X | X |
| | 100.88 | 17 | 796500 | 200.00 | 132.00 | 100.00 | 66.00 | | | | | X | X | X | X |
| | 117.35 | 15 | 796500 | 189.57 | 125.12 | 94.78 | 62.56 | | | | | X | X | X | X |
| | 137.22 | 13 | 796500 | 164.29 | 108.43 | 82.15 | 54.22 | | | | | X | X | X | X |
| | 154.35 | 11 | 796500 | 139.02 | 91.75 | 69.51 | 45.88 | | | | | X | X | X | X |
| | 201.75 | 8.7 | 796500 | 109.95 | 72.57 | 54.97 | 36.28 | | | | | X | X | X | |

* Caution - The motor power may exceed the gear unit's mechanical torque capacity
◈ The mechanical power limit of the solid input shaft type "W" may limit the reducer rating.
All ratings are mechanical. See page 14 for thermal considerations.

| lb | W | 56C | 140TC | 180TC | 210TC | 250TC | 280TC | 320TC | 360TC |
|---|---|---|---|---|---|---|---|---|---|
| **SK 11282** | 4557 | – | – | – | – | – | – | – | 4734 |
| **SK 11382** | 4727 | – | – | 4718 | 4718 | 4718 | 4718 | 4782 | 4782 |
| **SK 11382/52** | 4780 | 4769 | 4784 | 4815 | 4815 | 4837 | 4837 | – | – |
| **SK 12382** | 4727 | – | – | 4718 | 4718 | 4718 | 4749 | 4782 | 5079 |


Send Quote Requests to info@automatedpt.com
Call +1(800)985-6929 To Order or Order Online At Nordgearmotors.com

# Notes

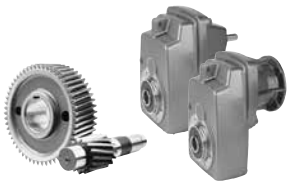

NORD DRIVESYSTEMS

NOTES


Send Quote Requests to info@automatedpt.com
Call +1(800)985-6929 To Order or Order Online At Nordgearmotors.com

# Clincher™ Shaft Mount Dimensions

## Dimensions

- Gearmotor
- Reducers C-Face
- Options
- Shafts

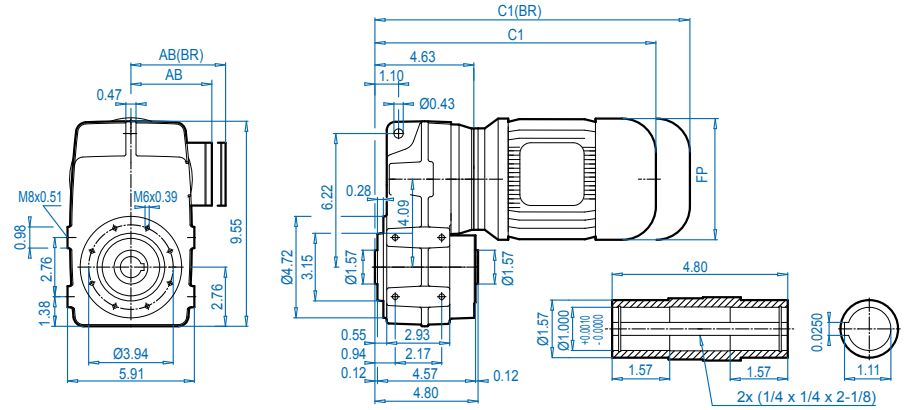


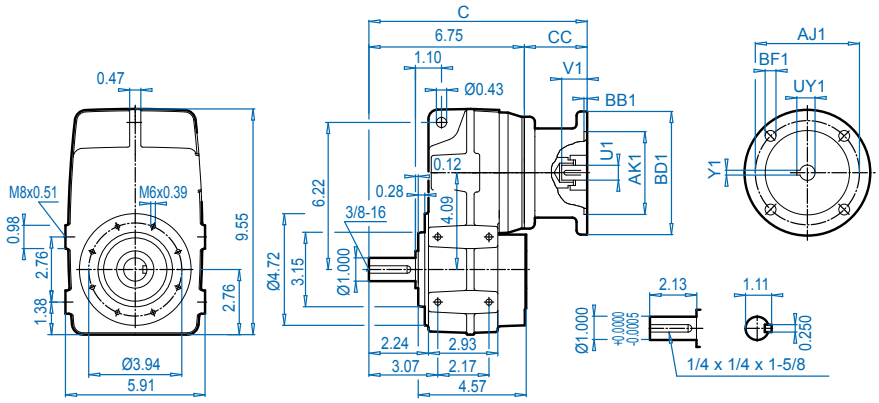


DRIVESYSTEMS

www.nord.com

UNICASE™

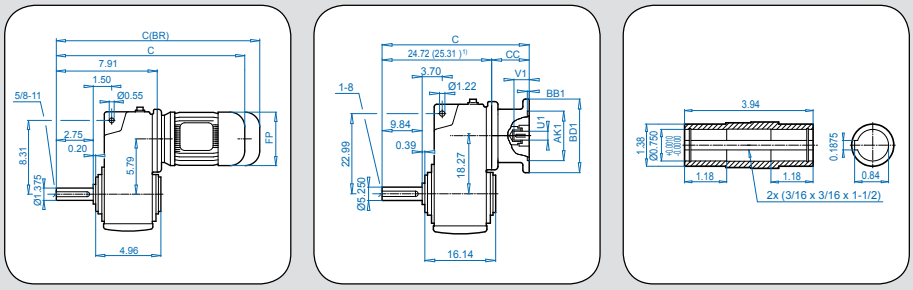

# SK 0182NB + Motor



DRIVESYSTEMS



## SK 0182NB/A

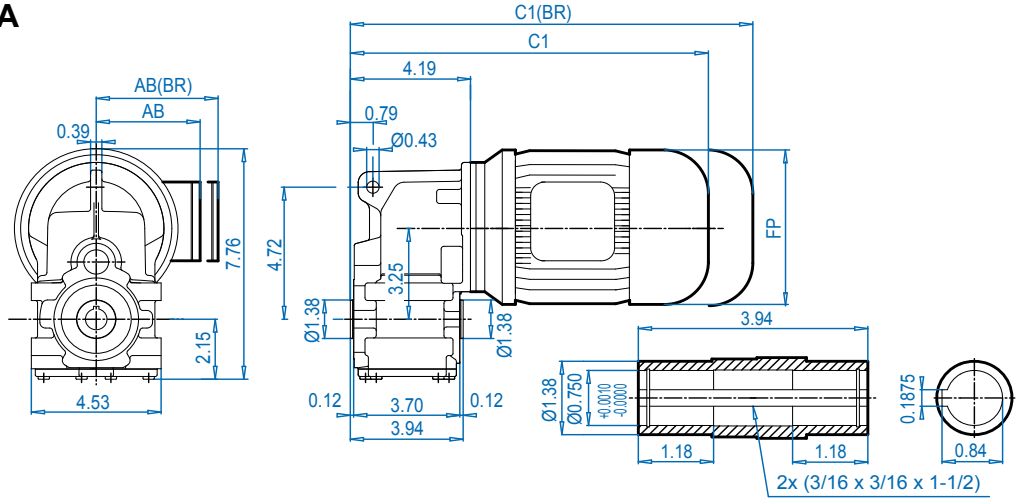


## SK 0182NB/V

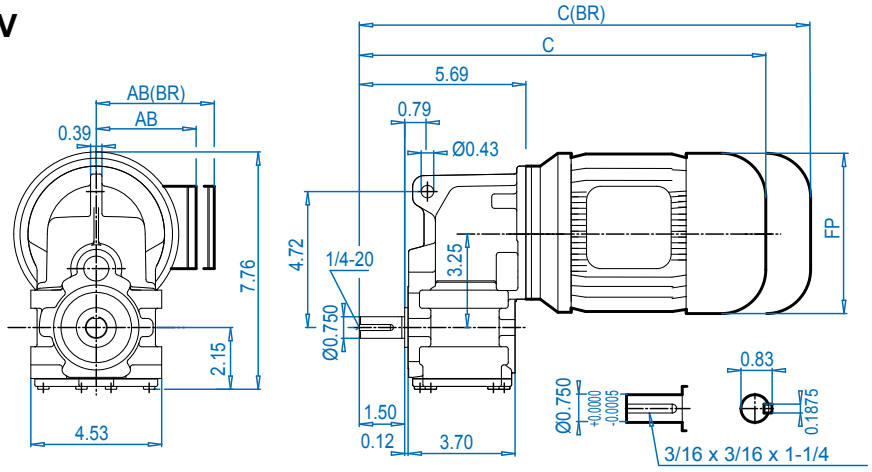


## SK 0182NB/**AB**

⇨🕮 394

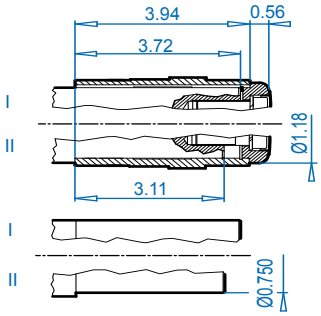


### Motor dimensions

| Standard efficiency | 63S/L | 71S/L | 80S/L | 90S/L | | | For Other Connection Possibilities please see ⇨🕮 376 & 378 |
|---|---|---|---|---|---|---|---|
| Energy efficiency | | | 80LH | 90SH/LH | | | |
| **AB** | 4.53 | 4.88 | 5.59 | 5.79 | | |  |
| **AB (BR)** | 4.84 | 5.24 | 5.63 | 5.83 | | | |
| **C1** | 11.77 | 12.64 | 13.50 | 15.08 | | | |
| **C1 (BR)** | 13.97 | 14.92 | 16.02 | 18.03 | | | |
| **C** | 13.27 | 14.14 | 15.00 | 16.58 | | | |
| **C (BR)** | 15.47 | 16.42 | 17.52 | 19.53 | | | |
| **FP** | 4.84 | 5.43 | 6.14 | 6.92 | | | |

**(BR)** denotes Brakemotor

ALTERNATE SHAFTS SEE PAGES 388 - 393


Send Quote Requests to info@automatedpt.com
Call +1(800)985-6929 To Order or Order Online At Nordgearmotors.com

Send Quote Requests to info@automatedpt.com
Call +1(800)985-6929 To Order or Order Online At Nordgearmotors.com







## SK 0182NB/A

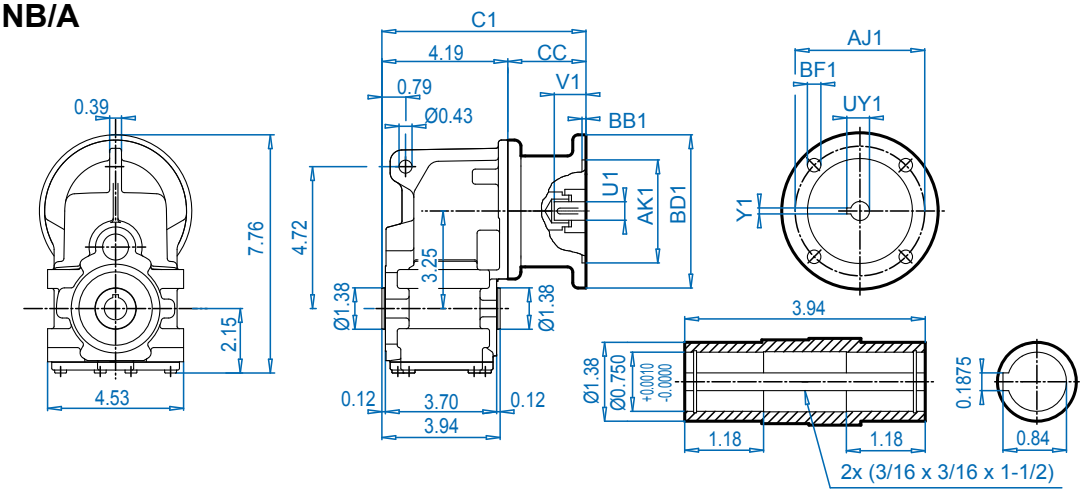


## SK 0182NB/V

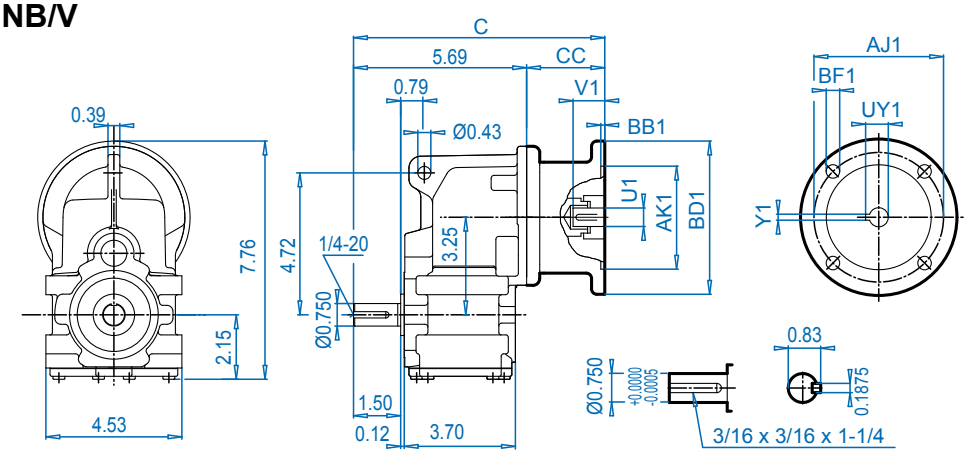


## SK 0182NB/**AB**

⇨🕮 394

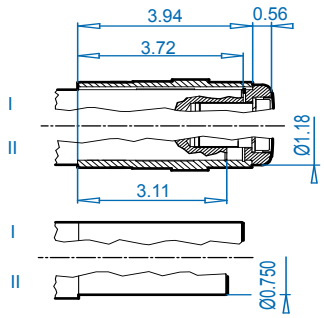


### NEMA Dimensions

| Type | AJ1 | AK1 | BB1 | BD1 | BF1 | U1 | V1 | UY1 | Y1 | C | C1 | CC |
|---|---|---|---|---|---|---|---|---|---|---|---|---|
| **56C** | 5.88 | 4.500 | 0.18 | 6.54 | 0.43 | 0.625 | 2.06 | 0.71 | 0.188 | 10.00 | 8.50 | 4.29 |
| **140TC** | 5.88 | 4.500 | 0.18 | 6.54 | 0.43 | 0.875 | 2.12 | 0.96 | 0.188 | 10.00 | 8.50 | 4.29 |




Send Quote Requests to info@automatedpt.com
Call +1(800)985-6929 To Order or Order Online At Nordgearmotors.com

# SK 0182NB + Motor





## SK 0182NB/AF

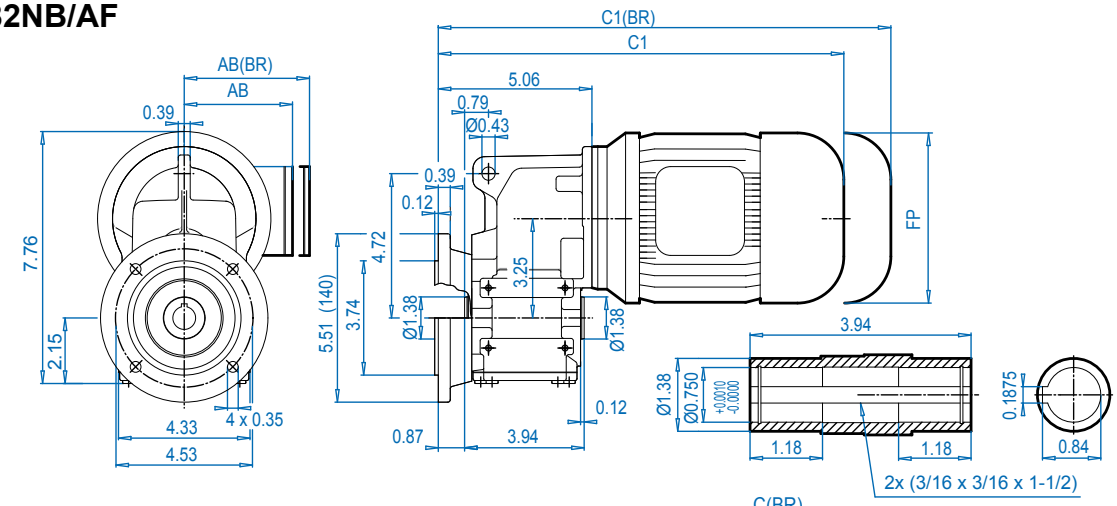


## SK 0182NB/VF

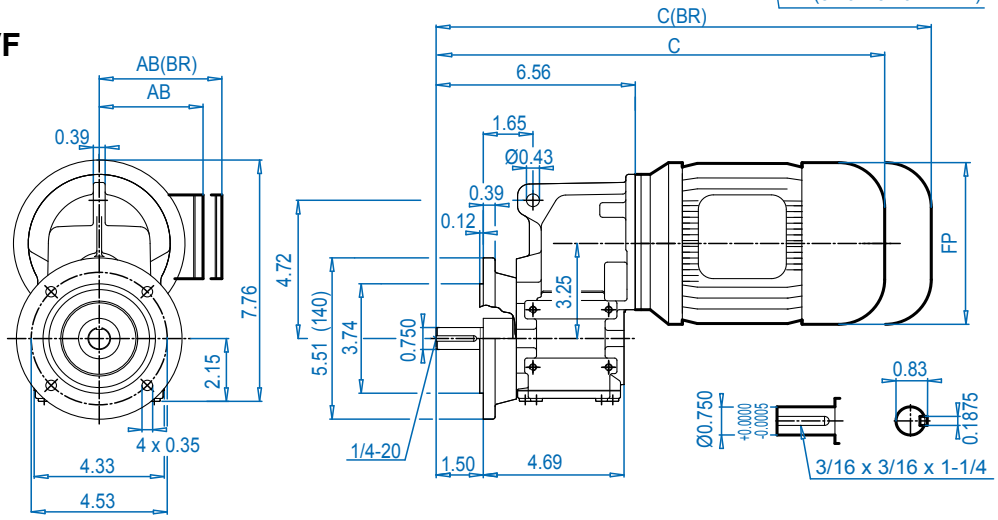




## SK 0182NB/**AB**

⇨📖 394

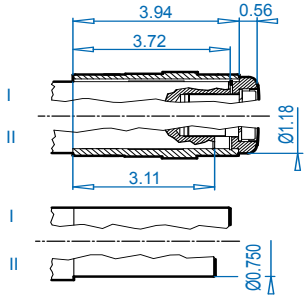


### Motor dimensions

| Standard efficiency | 63S/L | 71S/L | 80S/L | 90S/L | | | For Other Connection Possibilities please see ⇨📖 376 & 378 |
|---|---|---|---|---|---|---|---|
| Energy efficiency | | | 80LH | 90SH/LH | | | |
| **AB** | 4.53 | 4.88 | 5.59 | 5.79 | | |  |
| **AB (BR)** | 4.84 | 5.24 | 5.63 | 5.83 | | | |
| **C1** | 12.64 | 13.51 | 14.37 | 15.95 | | | |
| **C1 (BR)** | 14.84 | 15.79 | 16.89 | 18.90 | | | |
| **C** | 14.14 | 15.01 | 15.87 | 17.45 | | | |
| **C (BR)** | 16.34 | 17.29 | 18.39 | 20.40 | | | |
| **FP** | 4.84 | 5.43 | 6.14 | 6.92 | | | |

**(BR)** denotes Brakemotor


Send Quote Requests to info@automatedpt.com
Call +1(800)985-6929 To Order or Order Online At Nordgearmotors.com

DRIVESYSTEMS





# SK 0182NB + NEMA

## SK 0182NB/AF

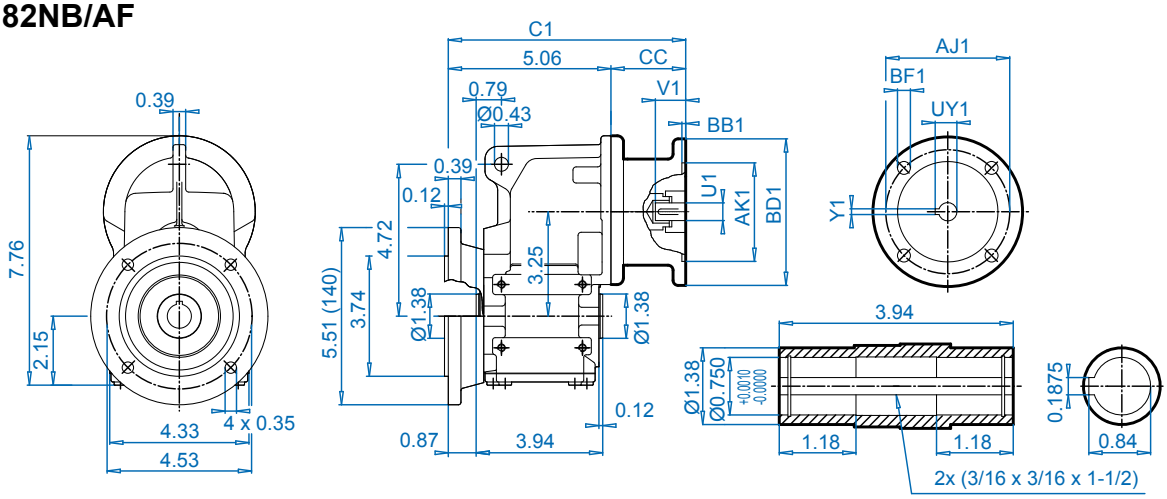


## SK 0182NB/VF

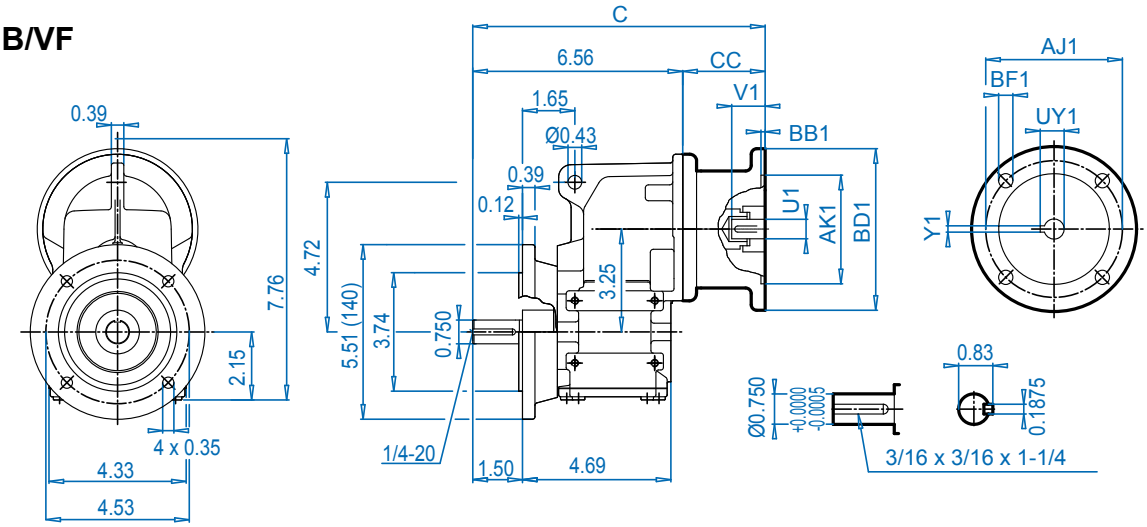


## SK 0182NB/**AB**

⇨🕮 394

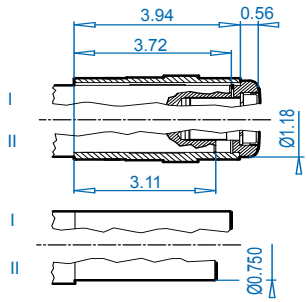


### NEMA Dimensions

| Type | AJ1 | AK1 | BB1 | BD1 | BF1 | U1 | V1 | UY1 | Y1 | C | C1 | CC |
|---|---|---|---|---|---|---|---|---|---|---|---|---|
| 56C | 5.88 | 4.500 | 0.18 | 6.54 | 0.43 | 0.625 | 2.06 | 0.71 | 0.188 | 10.87 | 9.37 | 4.29 |
| 140TC | 5.88 | 4.500 | 0.18 | 6.54 | 0.43 | 0.875 | 2.12 | 0.96 | 0.188 | 10.87 | 9.37 | 4.29 |




Send Quote Requests to info@automatedpt.com
Call +1(800)985-6929 To Order or Order Online At Nordgearmotors.com

# SK 0182NB + Motor





DRIVESYSTEMS



## SK 0182NB/AZ

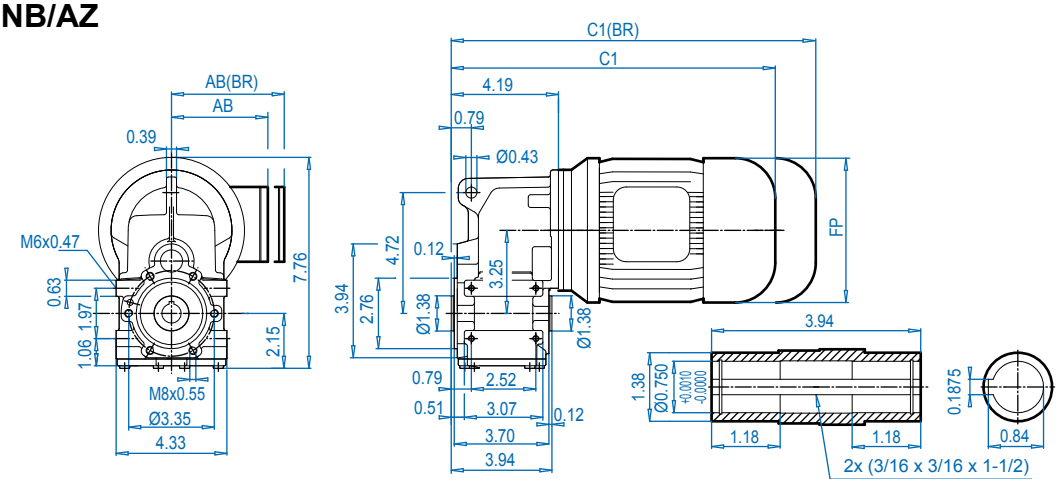


## SK 0182NB/VZ

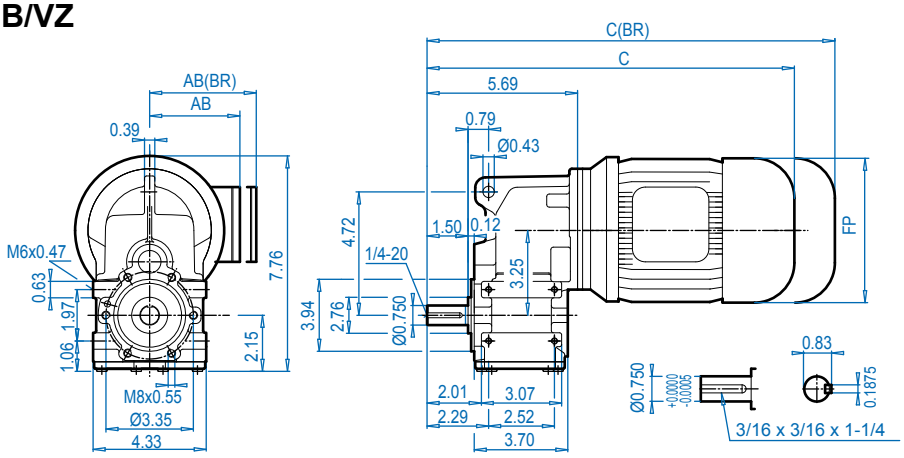




## SK 0182NB/**AB**

⇨🕮 394

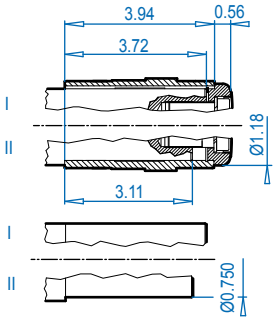


### Motor dimensions

| Standard efficiency | 63S/L | 71S/L | 80S/L | 90S/L | | | For Other Connection Possibilities please see ⇨🕮 376 & 378 |
|---|---|---|---|---|---|---|---|
| Energy efficiency | | | 80LH | 90SH/LH | | | |
| **AB** | 4.53 | 4.88 | 5.59 | 5.79 | | |  |
| **AB (BR)** | 4.84 | 5.24 | 5.63 | 5.83 | | | |
| **C1** | 11.77 | 12.64 | 13.50 | 15.08 | | | |
| **C1 (BR)** | 13.97 | 14.92 | 16.02 | 18.03 | | | |
| **C** | 13.27 | 14.14 | 15.00 | 16.58 | | | |
| **C (BR)** | 15.47 | 16.42 | 17.52 | 19.53 | | | |
| **FP** | 4.84 | 5.43 | 6.14 | 6.92 | | | |

**(BR)** denotes Brakemotor


Send Quote Requests to info@automatedpt.com
Call +1(800)985-6929 To Order or Order Online At Nordgearmotors.com

DRIVESYSTEMS





# SK 0182NB + NEMA

## SK 0182NB/AZ

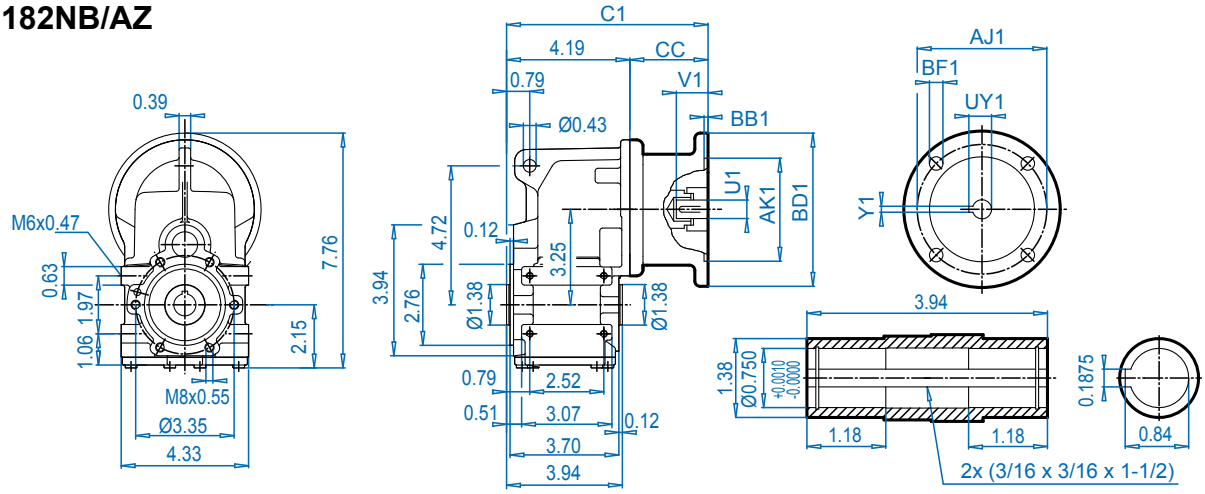


## SK 0182NB/VZ

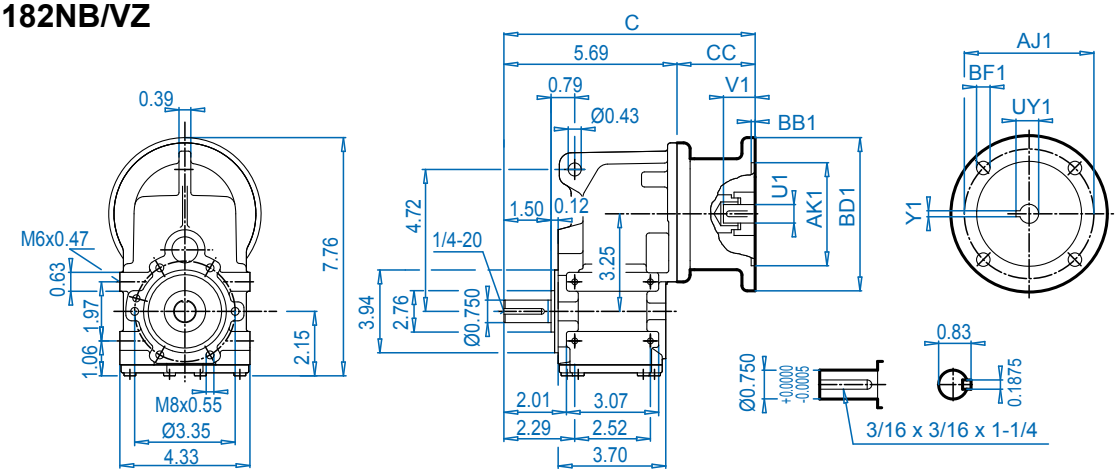


## SK 0182NB/**AB**

⇨📖 394

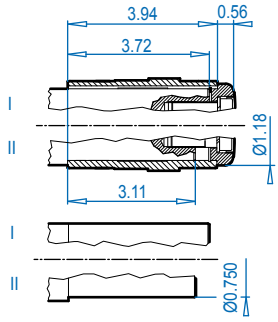


### NEMA Dimensions

| Type | AJ1 | AK1 | BB1 | BD1 | BF1 | U1 | V1 | UY1 | Y1 | C | C1 | CC |
|---|---|---|---|---|---|---|---|---|---|---|---|---|
| **56C** | 5.88 | 4.500 | 0.18 | 6.54 | 0.43 | 0.625 | 2.06 | 0.71 | 0.188 | 10.00 | 8.50 | 4.29 |
| **140TC** | 5.88 | 4.500 | 0.18 | 6.54 | 0.43 | 0.875 | 2.12 | 0.96 | 0.188 | 10.00 | 8.50 | 4.29 |

Dimensions in Inches
DIMENSIONS
ALTERNATE SHAFTS SEE PAGES 388 - 393


Send Quote Requests to info@automatedpt.com
Call +1(800)985-6929 To Order or Order Online At Nordgearmotors.com

# SK 0282NB + Motor





DRIVESYSTEMS

## SK 0282NB/A

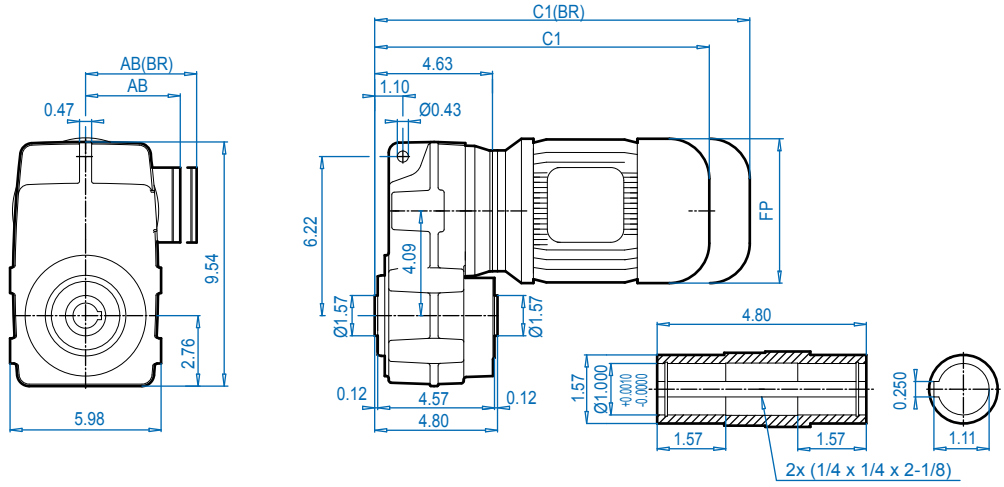


## SK 0282NB/V

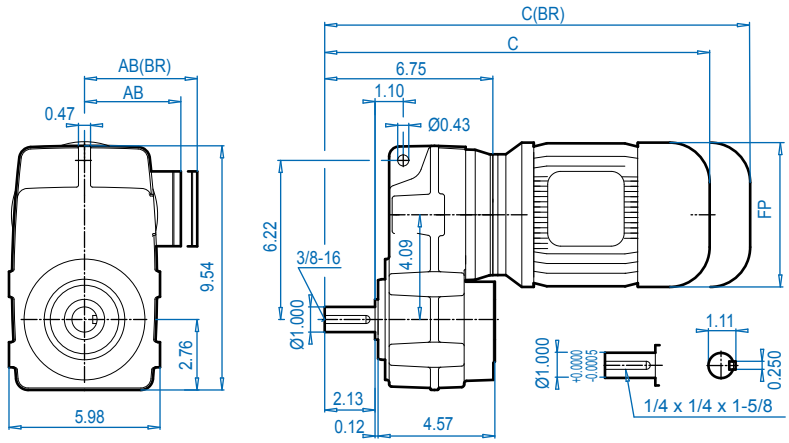


## SK 0282NB/**AB**

⇨🕮 394

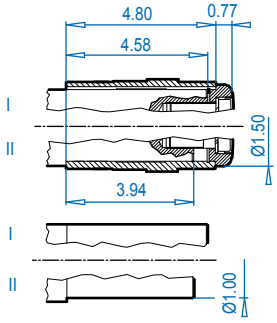


## SK 0282NB/**ASH**

⇨🕮 391

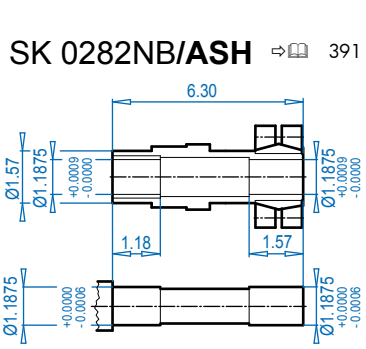


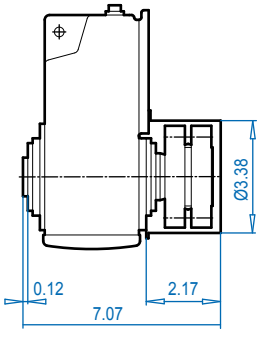


### Motor dimensions

| Standard efficiency | 63S/L | 71S/L | 80S/L | 90S/L | | | For Other Connection Possibilities please see ⇨🕮 376 & 378 |
|---|---|---|---|---|---|---|---|
| Energy efficiency | | | 80LH | 90SH/LH | | | |
| **AB** | 4.53 | 4.88 | 5.59 | 5.79 | | | |
| **AB (BR)** | 4.84 | 5.24 | 5.63 | 5.83 | | | |
| **C1** | 12.21 | 13.07 | 13.94 | 15.51 | | | |
| **C1 (BR)** | 14.41 | 15.35 | 16.46 | 18.47 | | | |
| **C** | 14.33 | 15.20 | 16.07 | 17.64 | | | |
| **C (BR)** | 16.54 | 17.48 | 18.59 | 20.59 | | | |
| **FP** | 4.84 | 5.43 | 6.14 | 6.92 | | | |



**(BR)** denotes Brakemotor




Send Quote Requests to info@automatedpt.com
Call +1(800)985-6929 To Order or Order Online At Nordgearmotors.com

DRIVESYSTEMS





# SK 0282NB + NEMA

## SK 0282NB/A

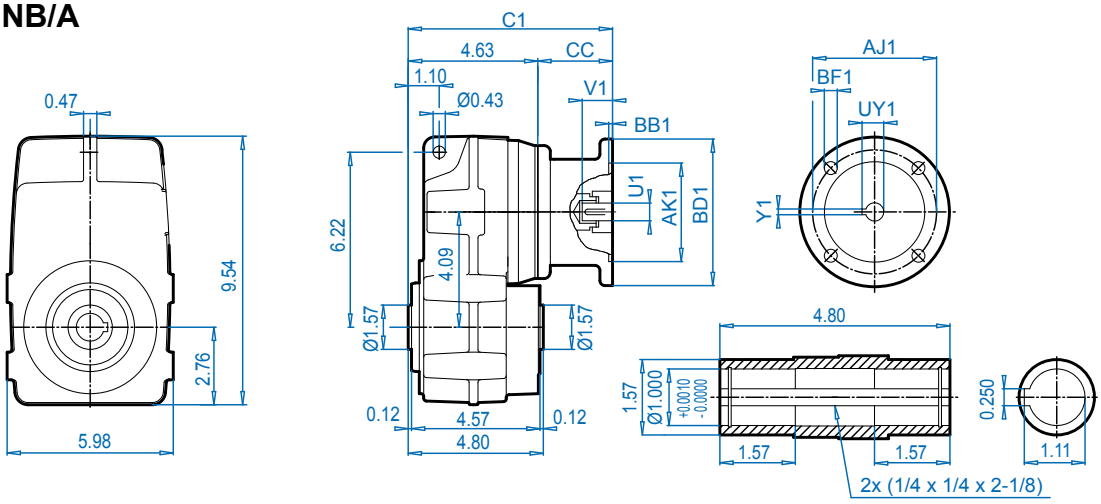


## SK 0282NB/V

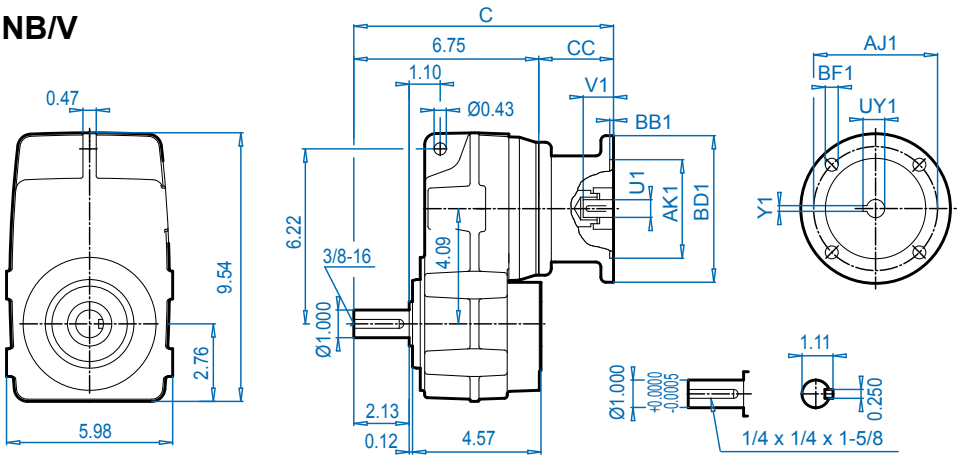


## SK 0282NB/**AB**

⇨🕮 394

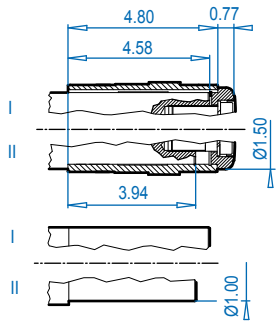


## SK 0282NB/**ASH**

⇨🕮 391

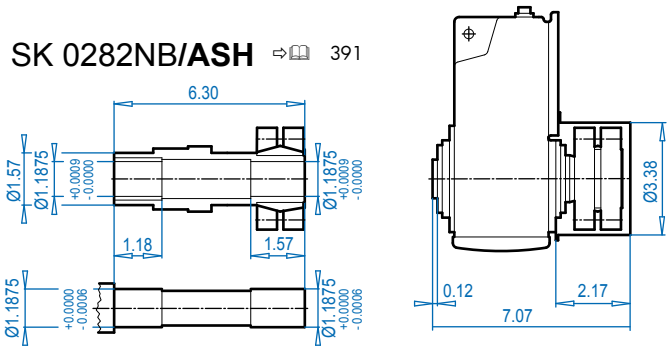


### NEMA Dimensions

| Type | AJ1 | AK1 | BB1 | BD1 | BF1 | U1 | V1 | UY1 | Y1 | C | C1 | CC |
|---|---|---|---|---|---|---|---|---|---|---|---|---|
| **56C** | 5.88 | 4.500 | 0.18 | 6.54 | 0.43 | 0.625 | 2.06 | 0.71 | 0.188 | 11.06 | 8.94 | 4.29 |
| **140TC** | 5.88 | 4.500 | 0.18 | 6.54 | 0.43 | 0.875 | 2.12 | 0.96 | 0.188 | 11.06 | 8.94 | 4.29 |




Send Quote Requests to info@automatedpt.com
Call +1(800)985-6929 To Order or Order Online At Nordgearmotors.com

# SK 0282 + Motor





## SK 0282NB/AF

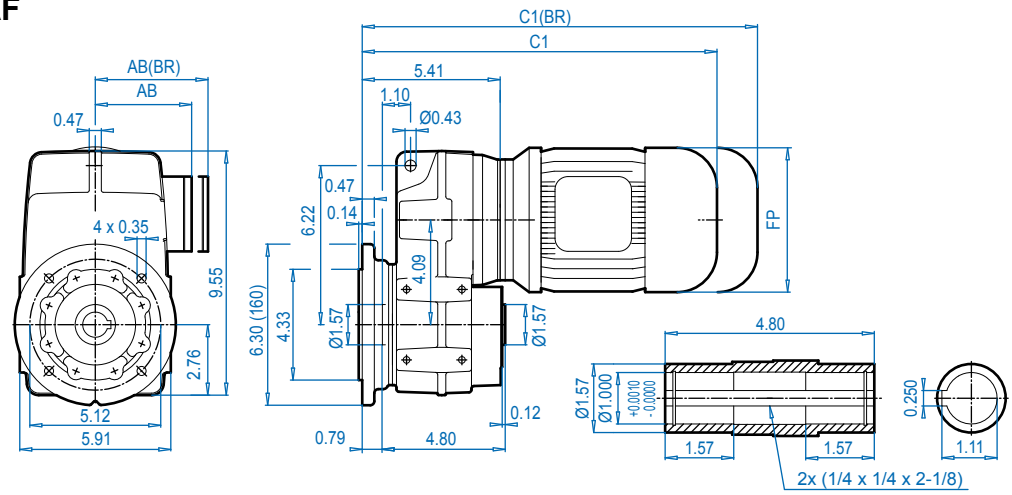


## SK 0282NB/VF

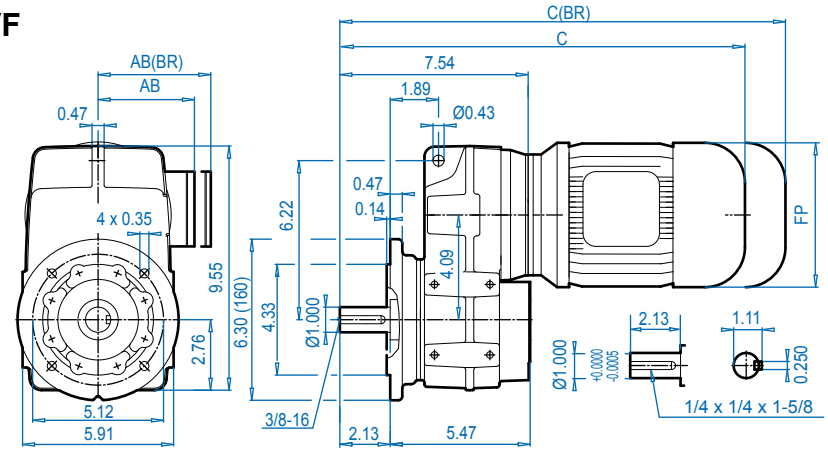


## SK 0282NB/**AB**

⇨🕮 394

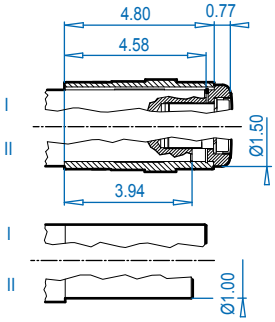


## SK 0282NB/**ASH**

⇨🕮 391

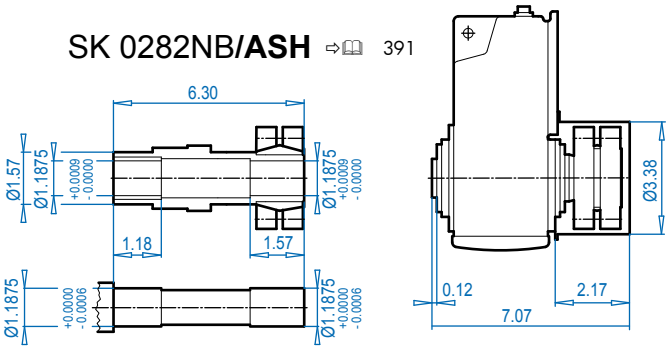


### Motor dimensions

| Standard efficiency | 63S/L | 71S/L | 80S/L | 90S/L | | | For Other Connection Possibilities please see ⇨🕮 376 & 378 |
|---|---|---|---|---|---|---|---|
| Energy efficiency | | | 80LH | 90SH/LH | | | |
| **AB** | 4.53 | 4.88 | 5.59 | 5.79 | | | 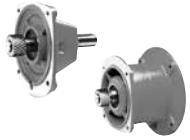 |
| **AB (BR)** | 4.84 | 5.24 | 5.63 | 5.83 | | | |
| **C1** | 12.99 | 13.86 | 14.72 | 16.30 | | | |
| **C1 (BR)** | 15.20 | 16.14 | 17.24 | 19.25 | | | |
| **C** | 15.12 | 15.99 | 16.85 | 18.43 | | | |
| **C (BR)** | 17.32 | 18.27 | 19.37 | 21.38 | | | |
| **FP** | 4.84 | 5.43 | 6.14 | 6.92 | | | |

**(BR)** denotes Brakemotor


Send Quote Requests to info@automatedpt.com
Call +1(800)985-6929 To Order or Order Online At Nordgearmotors.com

DRIVESYSTEMS





# SK 0282NB + NEMA

## SK 0282NB/AF

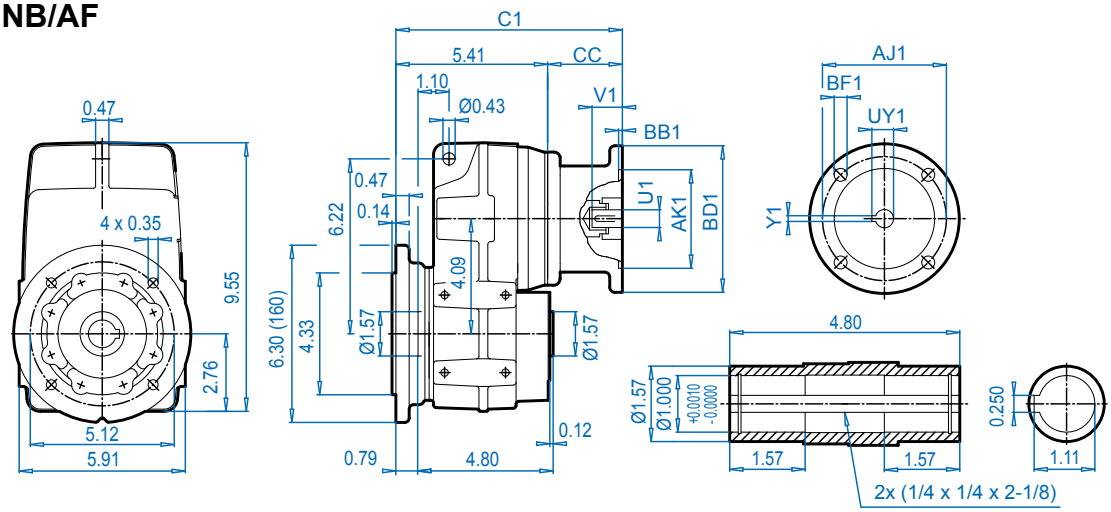


## SK 0282NB/VF

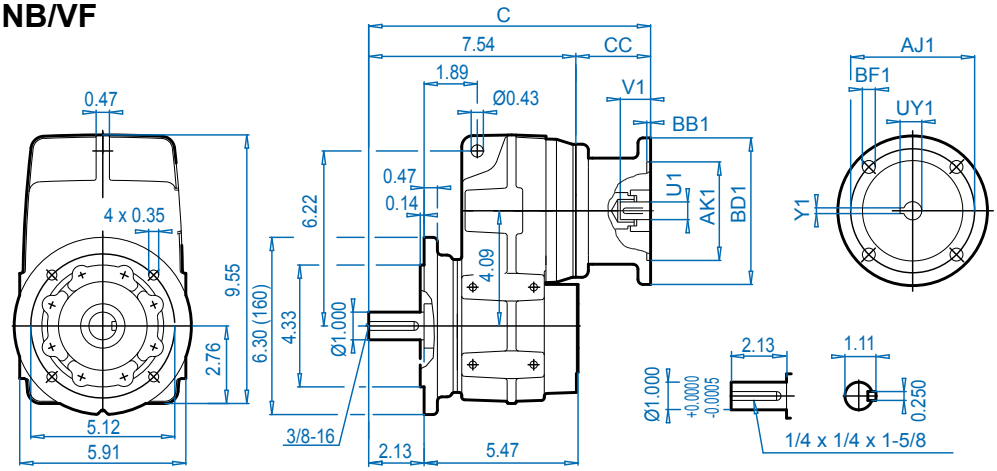


## SK 0282NB/**AB**

⇨🕮 394

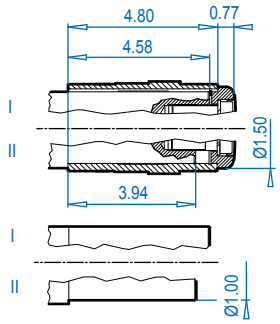


## SK 0282NB/**ASH**

⇨🕮 391

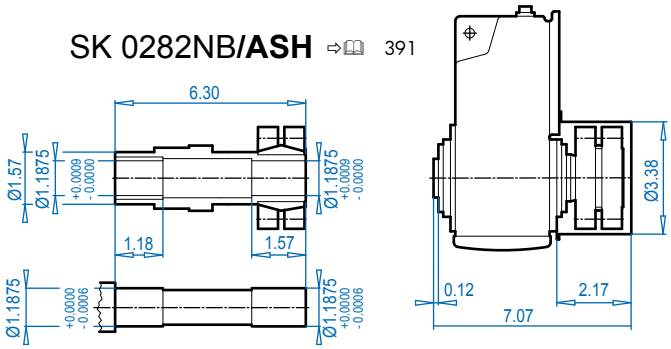


### NEMA Dimensions

| Type | AJ1 | AK1 | BB1 | BD1 | BF1 | U1 | V1 | UY1 | Y1 | C | C1 | CC |
|---|---|---|---|---|---|---|---|---|---|---|---|---|
| 56C | 5.88 | 4.500 | 0.18 | 6.54 | 0.43 | 0.625 | 2.06 | 0.71 | 0.188 | 11.85 | 9.72 | 4.29 |
| 140TC | 5.88 | 4.500 | 0.18 | 6.54 | 0.43 | 0.875 | 2.12 | 0.96 | 0.188 | 11.85 | 9.72 | 4.29 |




Send Quote Requests to info@automatedpt.com
Call +1(800)985-6929 To Order or Order Online At Nordgearmotors.com

# SK 0282NB + Motor





DRIVESYSTEMS



## SK 0282NB/AZ

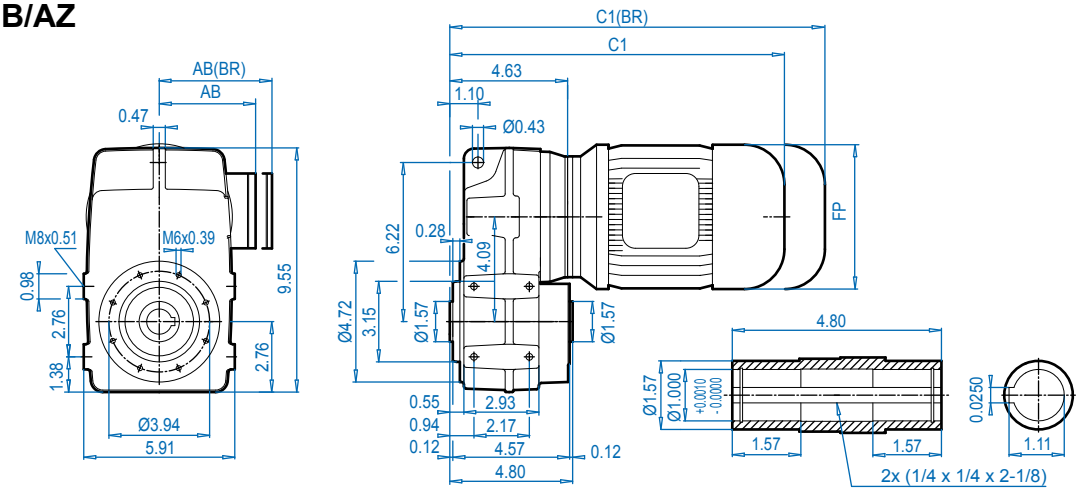


## SK 0282NB/VZ

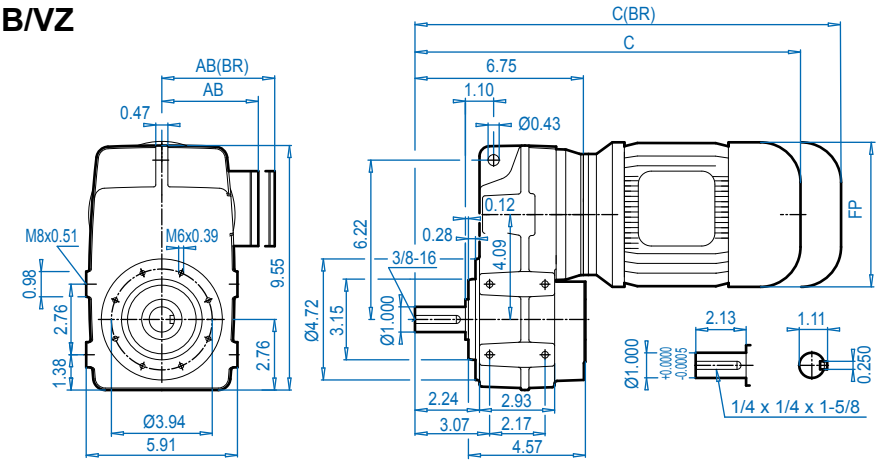


## SK 0282NB/**AB**

⇨🕮 394

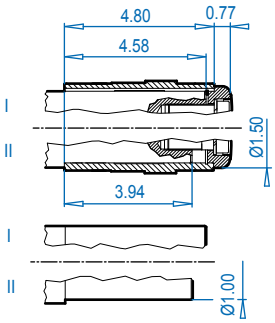


## SK 0282NB/**ASH**

⇨🕮 391

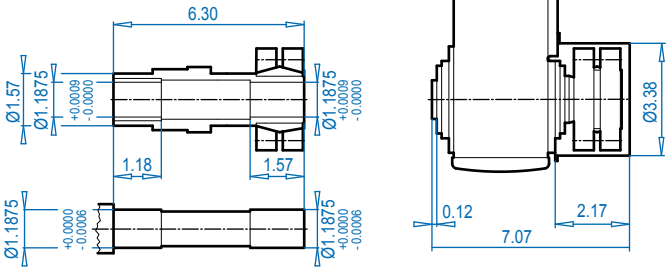


### Motor dimensions

| Standard efficiency | 63S/L | 71S/L | 80S/L | 90S/L | | | For Other Connection Possibilities please see ⇨🕮 376 & 378 |
|---|---|---|---|---|---|---|---|
| Energy efficiency | | | 80LH | 90SH/LH | | | |
| **AB** | 4.53 | 4.88 | 5.59 | 5.79 | | |  |
| **AB (BR)** | 4.84 | 5.24 | 5.63 | 5.83 | | | |
| **C1** | 12.21 | 13.07 | 13.94 | 15.51 | | | |
| **C1 (BR)** | 14.41 | 15.35 | 16.46 | 18.47 | | | |
| **C** | 14.33 | 15.20 | 16.07 | 17.64 | | | |
| **C (BR)** | 16.54 | 17.48 | 18.59 | 20.59 | | | |
| **FP** | 4.84 | 5.43 | 6.14 | 6.92 | | | |

**(BR)** denotes Brakemotor

ALTERNATE SHAFTS SEE PAGES 388 - 393


Send Quote Requests to info@automatedpt.com
Call +1(800)985-6929 To Order or Order Online At Nordgearmotors.com

DRIVESYSTEMS





# SK 0282NB + NEMA

## SK 0282NB/AZ

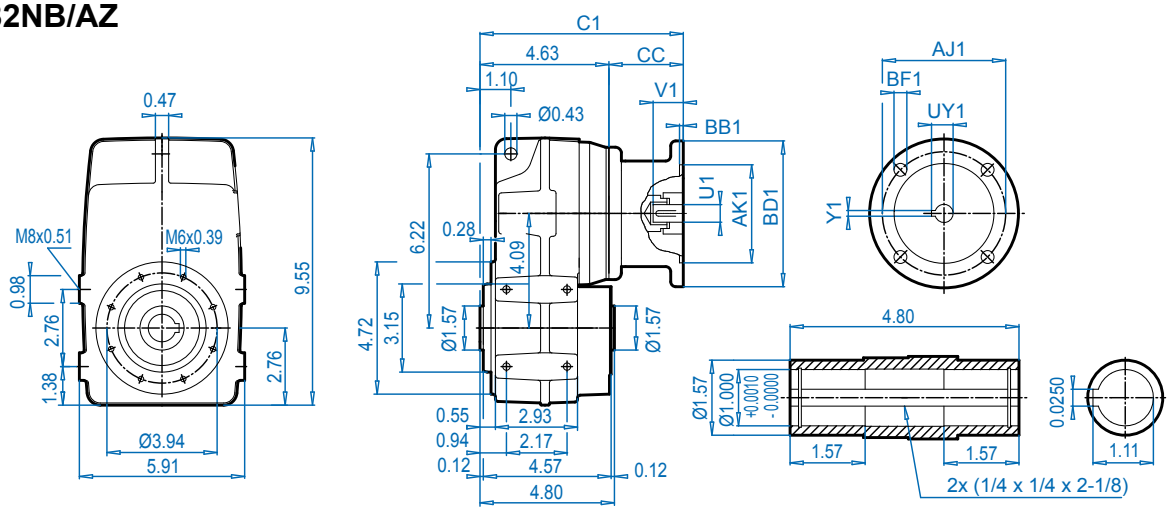


## SK 0282NB/VZ

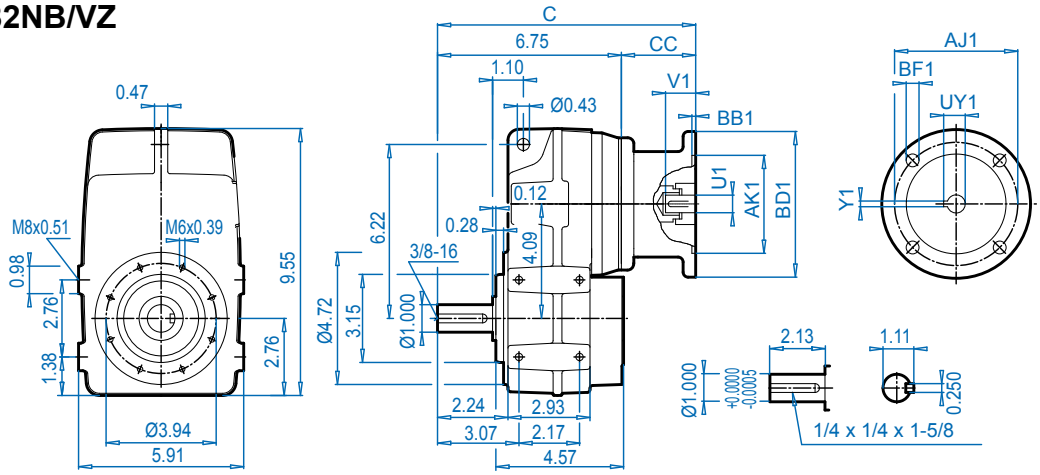


## SK 0282NB/**AB**

⇨🕮 394

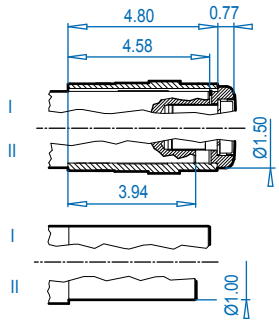


## SK 0282NB/**ASH** ⇨🕮 391

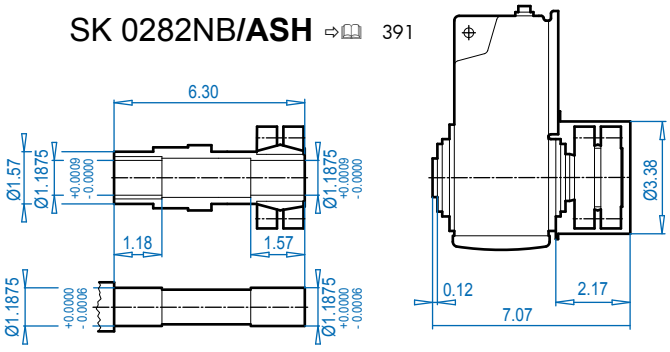


### NEMA Dimensions

| Type | AJ1 | AK1 | BB1 | BD1 | BF1 | U1 | V1 | UY1 | Y1 | C | C1 | CC |
|---|---|---|---|---|---|---|---|---|---|---|---|---|
| 56C | 5.88 | 4.500 | 0.18 | 6.54 | 0.43 | 0.625 | 2.06 | 0.71 | 0.188 | 11.06 | 8.94 | 4.29 |
| 140TC | 5.88 | 4.500 | 0.18 | 6.54 | 0.43 | 0.875 | 2.12 | 0.96 | 0.188 | 11.06 | 8.94 | 4.29 |




©1999 - Subject to Change Without Notice
Send Quote Requests to info@automatedpt.com
Call +1(800)985-6929 To Order or Order Online At Nordgearmotors.com

# SK 1382NB + Motor



DRIVESYSTEMS



## SK 1382NB/A

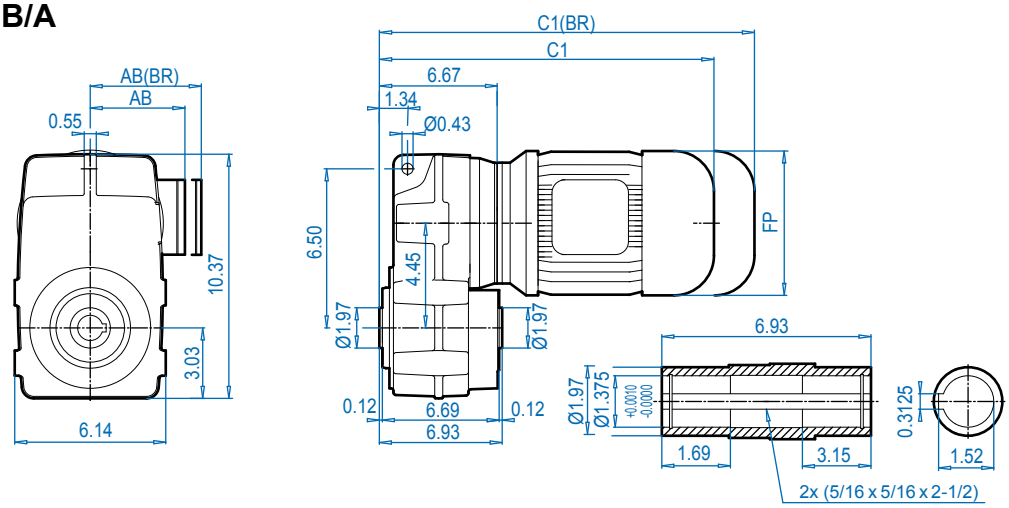


## SK 1382NB/V

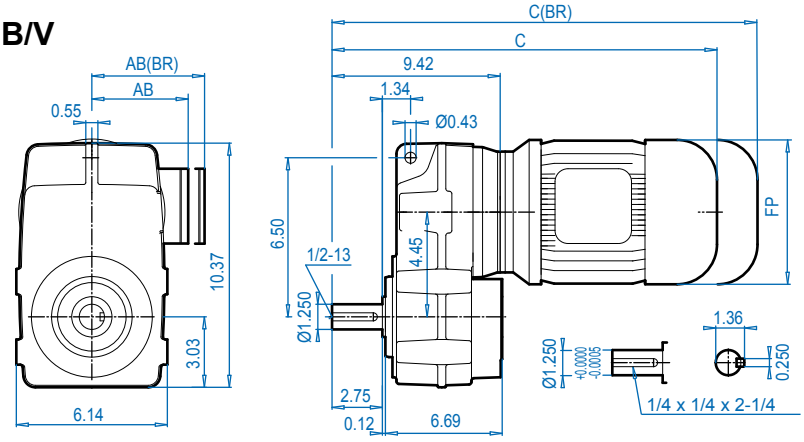


## SK 1382NB/**AB**

⇨🕮 394

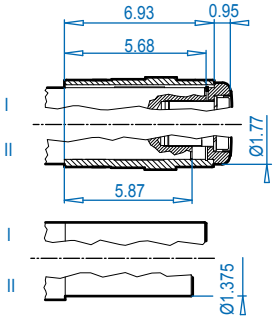


## SK 1382**NB/ASH** ⇨🕮 391

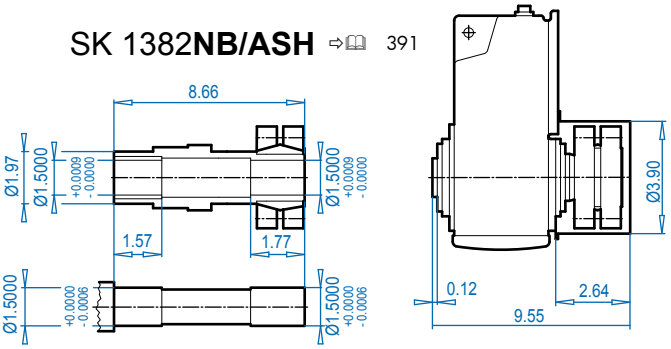


### Motor dimensions

| Standard efficiency | 63S/L | 71S/L | 80S/L | 90S/L | 100L | | For Other Connection Possibilities please see ⇨🕮 376 & 378 |
|---|---|---|---|---|---|---|---|
| Energy efficiency | | | 80LH | 90SH/LH | 100LH | | |
| **AB** | 4.53 | 4.88 | 5.59 | 5.79 | 6.65 | |  |
| **AB (BR)** | 4.84 | 5.24 | 5.63 | 5.83 | 6.26 | | |
| **C1** | 14.13 | 15.00 | 15.87 | 17.44 | 18.62 | | |
| **C1 (BR)** | 16.34 | 17.28 | 18.39 | 20.39 | 22.21 | | |
| **C** | 16.89 | 17.75 | 18.62 | 20.19 | 21.37 | | |
| **C (BR)** | 19.09 | 20.04 | 21.14 | 23.15 | 24.96 | | |
| **FP** | 4.84 | 5.43 | 6.14 | 6.92 | 7.63 | | |

**(BR)** denotes Brakemotor

ALTERNATE SHAFTS SEE PAGES 388 - 393


Send Quote Requests to info@automatedpt.com
Call +1(800)985-6929 To Order or Order Online At Nordgearmotors.com

DRIVESYSTEMS





# SK 1382NB + NEMA

## SK 1382NB/A

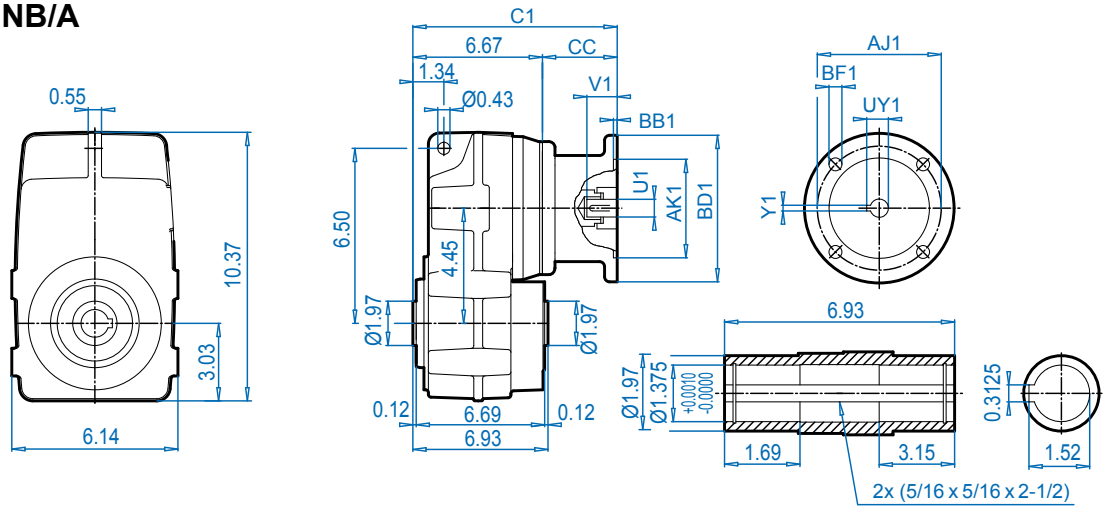


## SK 1382NB/V

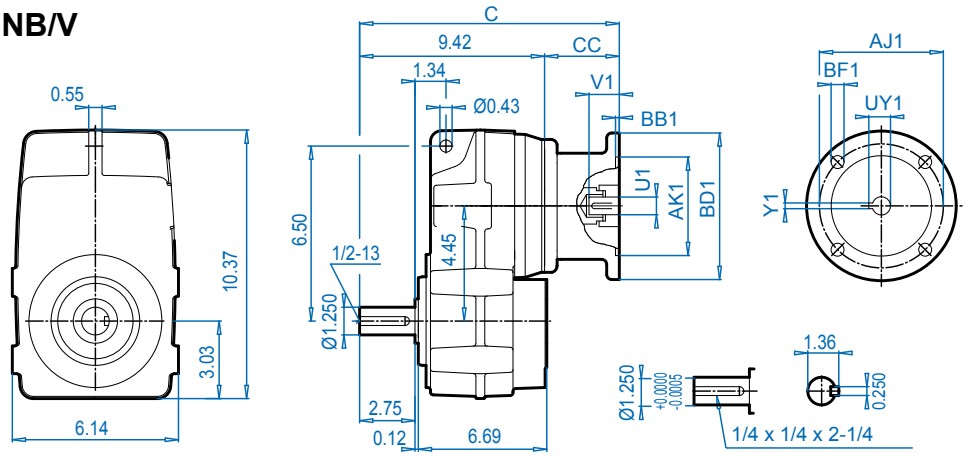


## SK 1382NB/AB

⇨📖 394

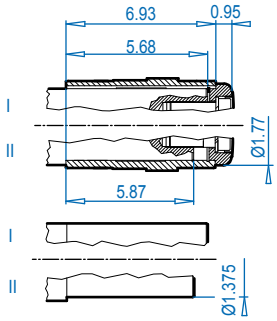


## SK 1382NB/ASH

⇨📖 391

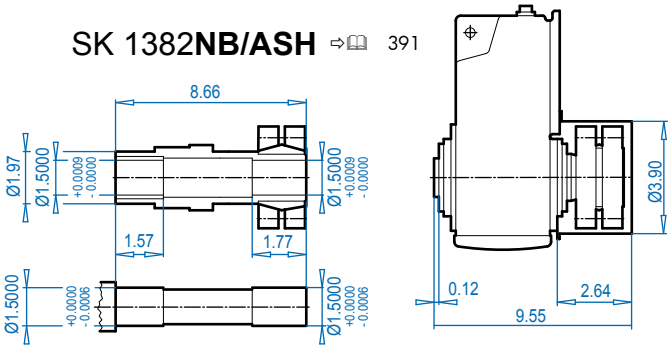


### NEMA Dimensions

| Type | AJ1 | AK1 | BB1 | BD1 | BF1 | U1 | V1 | UY1 | Y1 | C | C1 | CC |
|---|---|---|---|---|---|---|---|---|---|---|---|---|
| 56C | 5.88 | 4.500 | 0.18 | 6.54 | 0.43 | 0.625 | 2.06 | 0.71 | 0.188 | 13.62 | 10.87 | 4.29 |
| 140TC | 5.88 | 4.500 | 0.18 | 6.54 | 0.43 | 0.875 | 2.12 | 0.96 | 0.188 | 13.62 | 10.87 | 4.29 |
| 180TC | 7.25 | 8.500 | 0.23 | 9.17 | 0.59 | 1.125 | 2.62 | 1.24 | 0.250 | 14.84 | 12.09 | 5.51 |




Send Quote Requests to info@automatedpt.com
Call +1(800)985-6929 To Order or Order Online At Nordgearmotors.com

# SK 1382NB + Motor



DRIVESYSTEMS



## SK 1382NB/AF

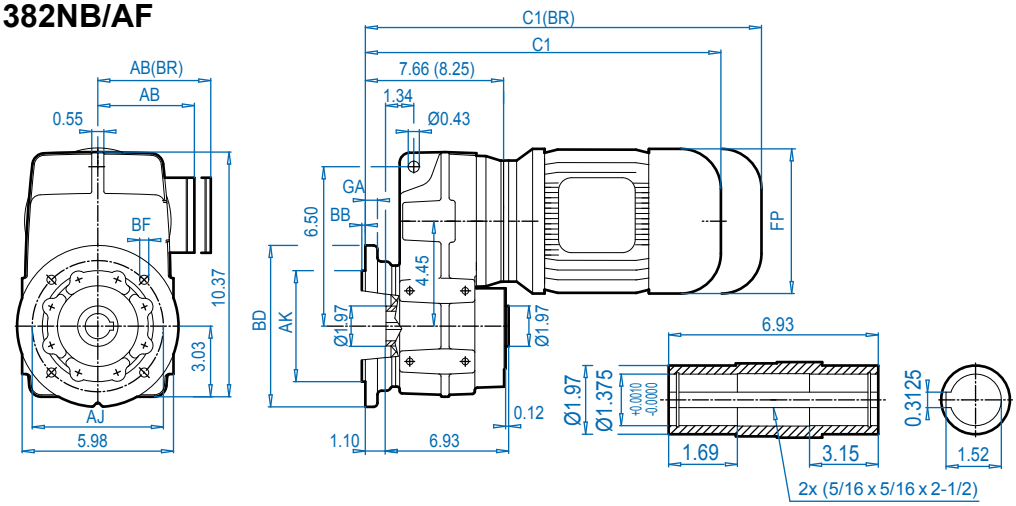


## SK 1382NB/VF

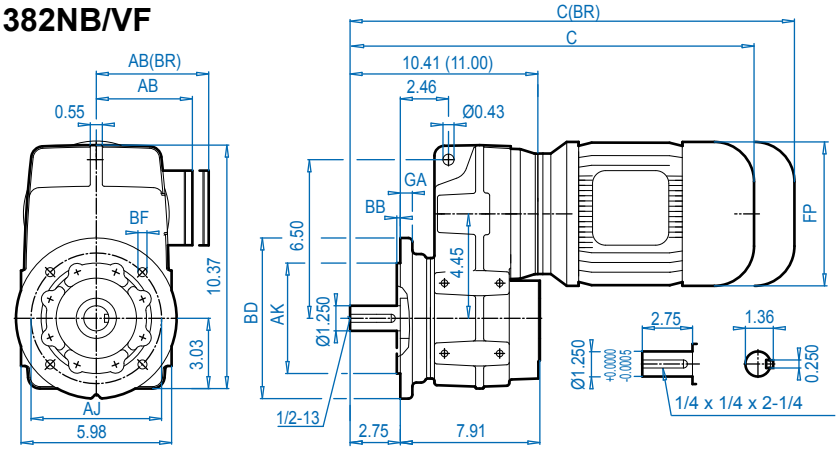


## SK 1382NB/ASH

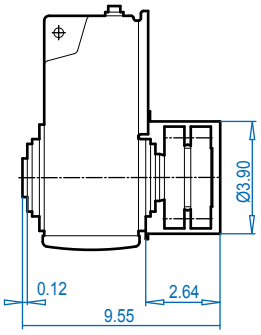


## SK 1382NB/AB ⇨🕮 394

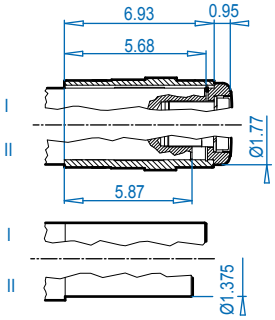


## SK 1382NB/AS ⇨🕮 391

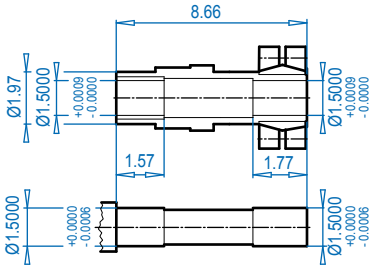


### Mounting Flange

| BD (mm) | AJ | AK | BB | BF | GA |
|---|---|---|---|---|---|
| 6.30 (160) | 5.12 | 4.33 +0.00 -0.00 | 0.14 | 0.35 | 0.47 |
| 7.87 (200) | 6.50 | 5.12 +0.00 -0.00 | 0.14 | 0.43 | 0.47 |

### Motor dimensions

| Standard efficiency | 63S/L | 71S/L | 80S/L | 90S/L | 100L | | For Other Connection Possibilities please see ⇨🕮 376 & 378 |
|---|---|---|---|---|---|---|---|
| Energy efficiency | | | 80LH | 90SH/LH | 100LH | | |
| AB | 4.53 | 4.88 | 5.59 | 5.79 | 6.65 | |  |
| AB (BR) | 4.84 | 5.24 | 5.63 | 5.83 | 6.26 | | |
| C1 | 15.24 | 16.11 | 16.97 | 19.09 | 20.31 | | |
| C1 (BR) | 17.44 | 18.39 | 19.49 | 22.04 | 23.91 | | |
| C | 19.99 | 18.86 | 19.72 | 21.84 | 23.06 | | |
| C (BR) | 20.19 | 21.14 | 22.24 | 24.79 | 26.66 | | |
| FP | 4.84 | 5.43 | 6.14 | 6.92 | 7.63 | | |

**(BR)** denotes Brakemotor

ALTERNATE SHAFTS SEE PAGES 388 - 393


Send Quote Requests to info@automatedpt.com
Call +1(800)985-6929 To Order or Order Online At Nordgearmotors.com

DRIVESYSTEMS





# SK 1382NB + NEMA

## SK 1382NB/AF

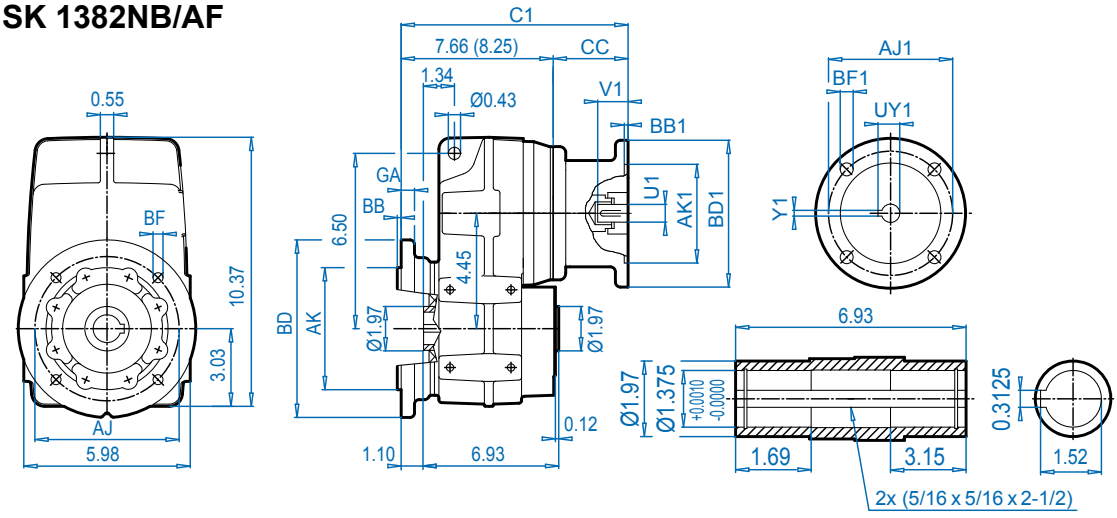


## SK 1382NB/VF

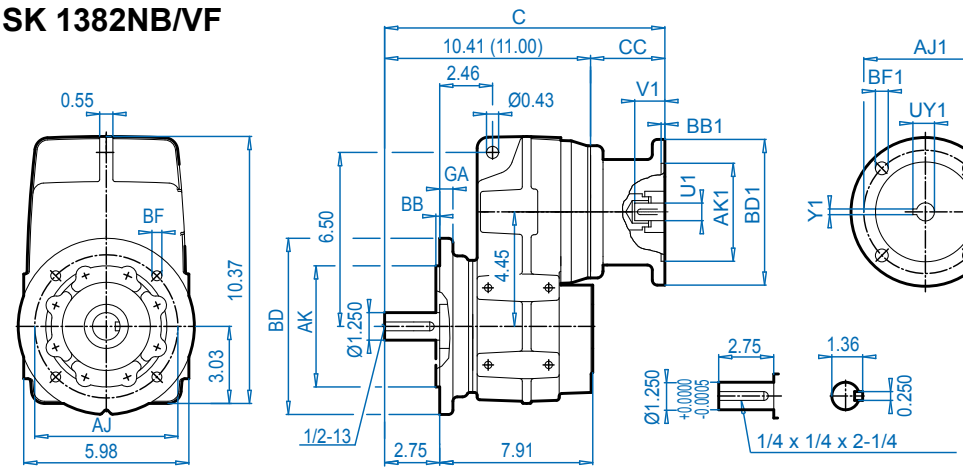


## SK 1382NB/ASH

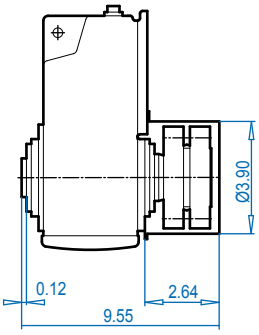


ALTERNATE SHAFTS SEE PAGES 388 - 393

## SK 1382NB/AB ⇨🕮 394

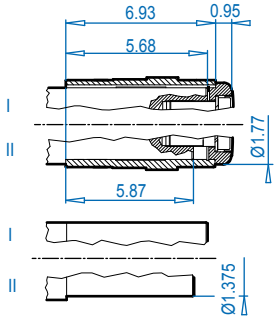


## SK 1382NB/ASH ⇨🕮 391

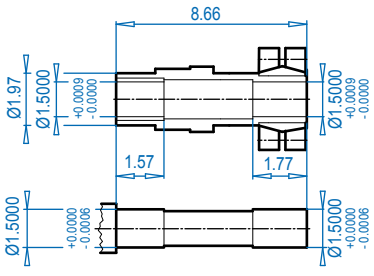


### Mounting Flange

| BD (mm) | AJ | AK | BB | BF | GA |
|---|---|---|---|---|---|
| 6.30 (160) | 5.12 | 4.33 +0.00 -0.00 | 0.14 | 0.35 | 0.47 |
| 7.87 (200) | 6.50 | 5.12 +0.00 -0.00 | 0.14 | 0.43 | 0.47 |

### NEMA Dimensions

| Type | AJ1 | AK1 | BB1 | BD1 | BF1 | U1 | V1 | UY1 | Y1 | C | C1 | CC |
|---|---|---|---|---|---|---|---|---|---|---|---|---|
| 56C | 5.88 | 4.500 | 0.18 | 6.54 | 0.43 | 0.625 | 2.06 | 0.71 | 0.188 | 14.72 | 11.97 | 4.29 |
| 140TC | 5.88 | 4.500 | 0.18 | 6.54 | 0.43 | 0.875 | 2.12 | 0.96 | 0.188 | 14.72 | 11.97 | 4.29 |
| 180TC | 7.25 | 8.500 | 0.23 | 9.17 | 0.59 | 1.125 | 2.62 | 1.24 | 0.250 | 16.53 | 13.78 | 5.51 |


Send Quote Requests to info@automatedpt.com
Call +1(800)985-6929 To Order or Order Online At Nordgearmotors.com

# SK 1382NB + Motor





## SK 1382NB/AZ

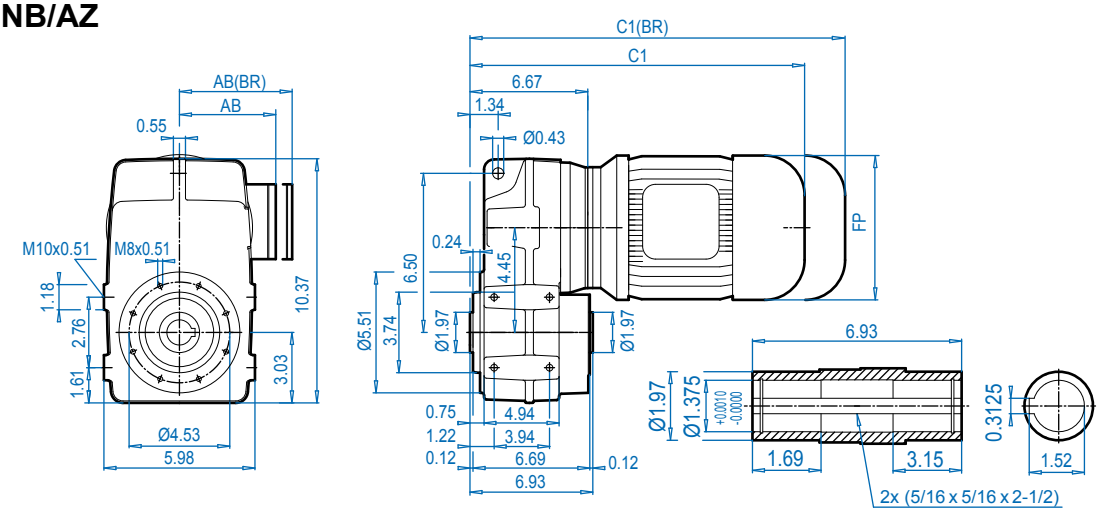


## SK 1382NB/VZ

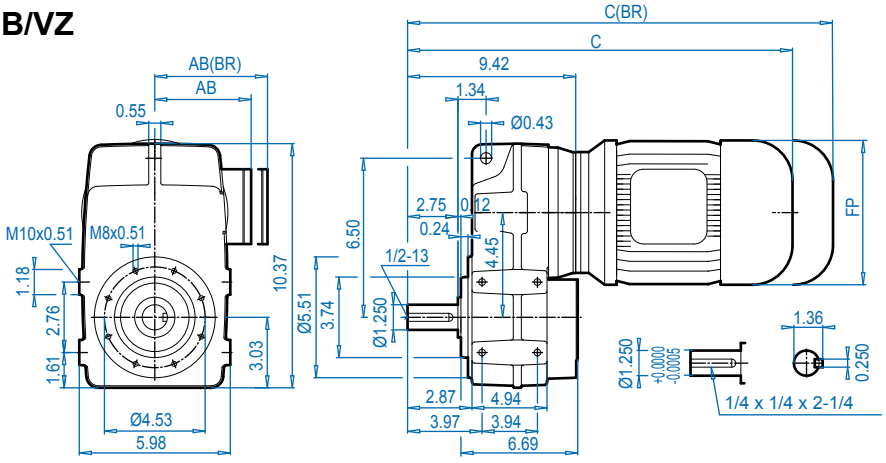


## SK 1382**NB/AB**

⇨📖 394

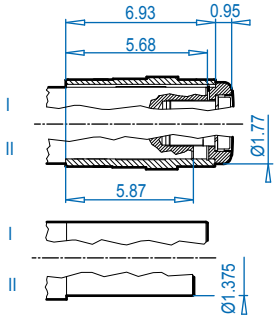


## SK 1382NB/**ASH**

⇨📖 391

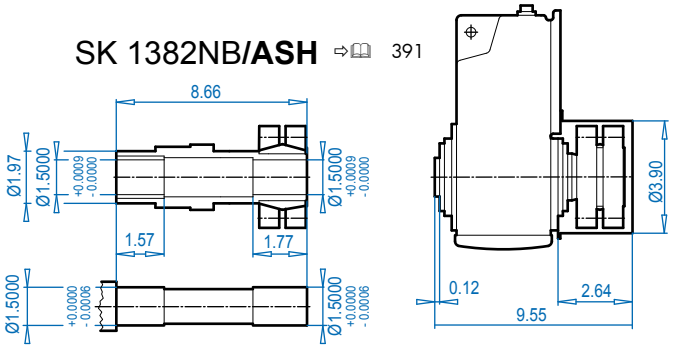


### Motor dimensions

| Standard efficiency | 63S/L | 71S/L | 80S/L | 90S/L | 100L | | For Other Connection Possibilities please see ⇨📖 376 & 378 |
|---|---|---|---|---|---|---|---|
| Energy efficiency | | | 80LH | 90SH/LH | 100LH | | |
| AB | 4.53 | 4.88 | 5.59 | 5.79 | 6.65 | |  |
| AB (BR) | 4.84 | 5.24 | 5.63 | 5.83 | 6.26 | | |
| C1 | 14.13 | 15.00 | 15.87 | 17.44 | 18.62 | | |
| C1 (BR) | 16.34 | 17.28 | 18.39 | 20.39 | 22.21 | | |
| C | 16.89 | 17.75 | 16.62 | 20.19 | 21.37 | | |
| C (BR) | 19.09 | 20.04 | 21.14 | 23.15 | 24.96 | | |
| FP | 4.84 | 5.43 | 6.14 | 6.92 | 7.63 | | |

**(BR)** denotes Brakemotor

ALTERNATE SHAFTS SEE PAGES 388 - 393


Send Quote Requests to info@automatedpt.com
Call +1(800)985-6929 To Order or Order Online At Nordgearmotors.com

DRIVESYSTEMS





# SK 1382NB + NEMA

## SK 1382NB/AZ

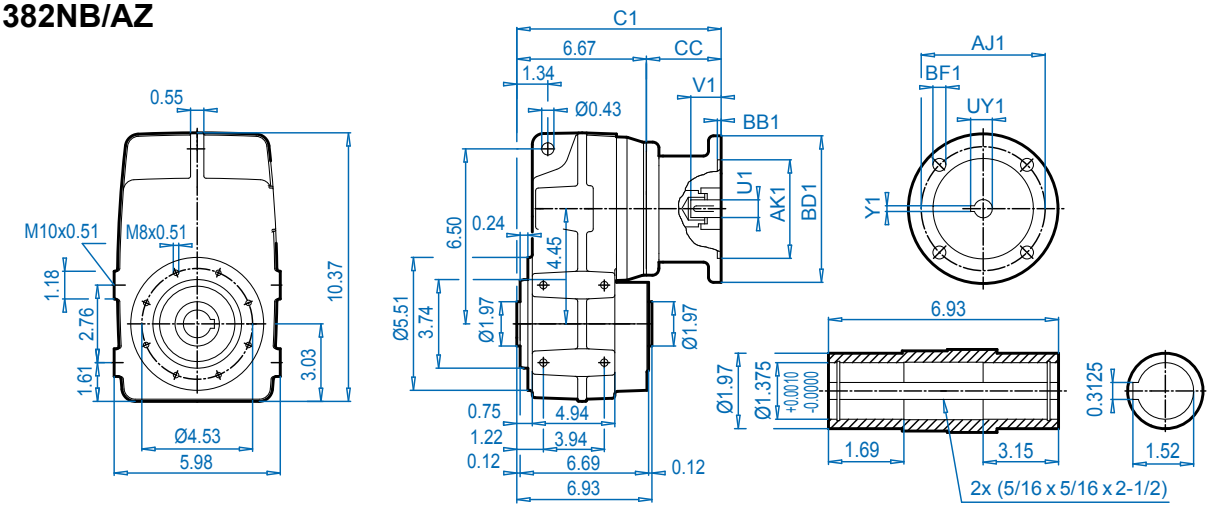


## SK 1382NB/VZ

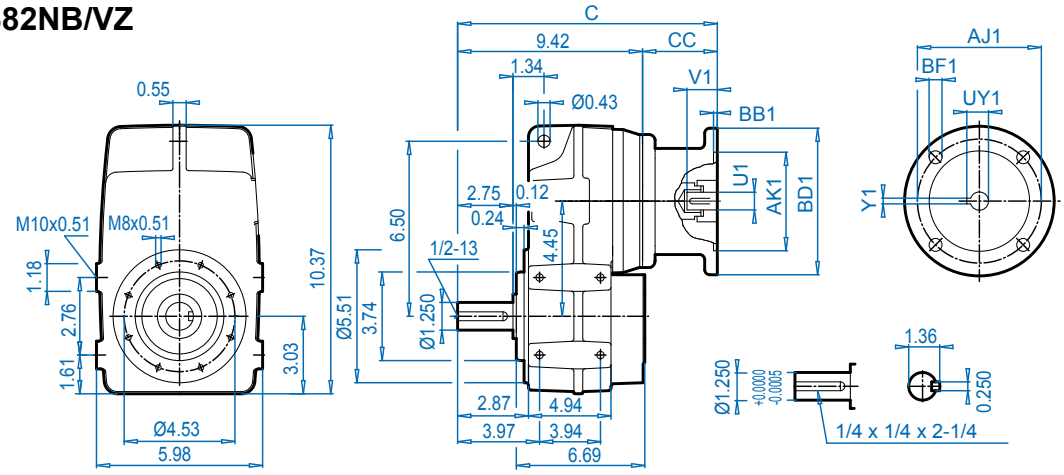


## SK 1382**NB/AB**

⇨🕮 394

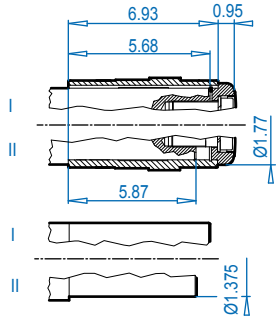


## SK 1382NB/**ASH**

⇨🕮 391

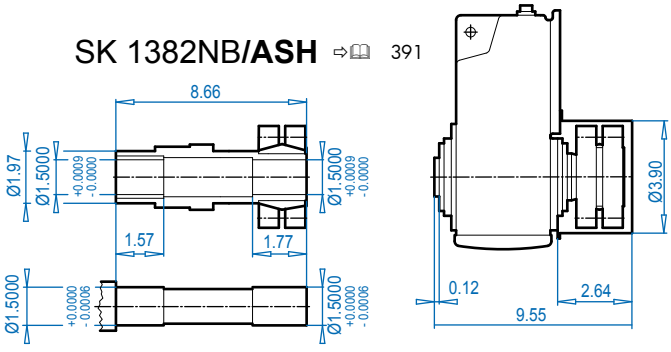


### NEMA Dimensions

| Type | AJ1 | AK1 | BB1 | BD1 | BF1 | U1 | V1 | UY1 | Y1 | C | C1 | CC |
|---|---|---|---|---|---|---|---|---|---|---|---|---|
| **56C** | 5.88 | 4.500 | 0.18 | 6.54 | 0.43 | 0.625 | 2.06 | 0.71 | 0.188 | 13.62 | 10.87 | 4.29 |
| **140TC** | 5.88 | 4.500 | 0.18 | 6.54 | 0.43 | 0.875 | 2.12 | 0.96 | 0.188 | 13.62 | 10.87 | 4.29 |
| **180TC** | 7.25 | 8.500 | 0.23 | 9.17 | 0.59 | 1.125 | 2.62 | 1.24 | 0.250 | 14.84 | 12.09 | 5.51 |




Send Quote Requests to info@automatedpt.com
Call +1(800)985-6929 To Order or Order Online At Nordgearmotors.com

# SK 1282 + Motor




DRIVESYSTEMS



## SK 1282V

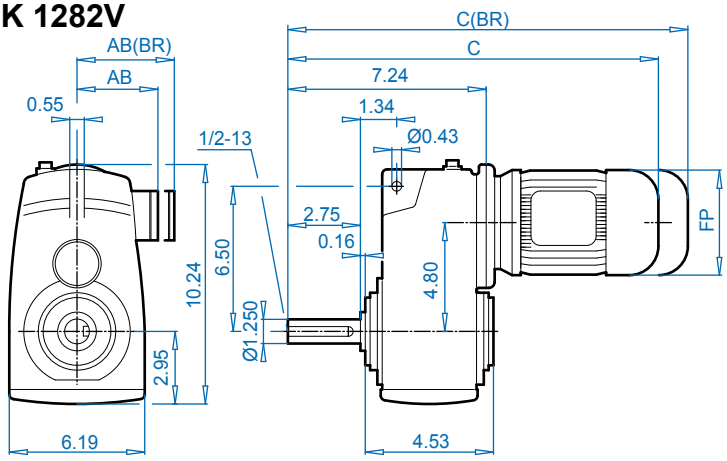


## SK 1282A

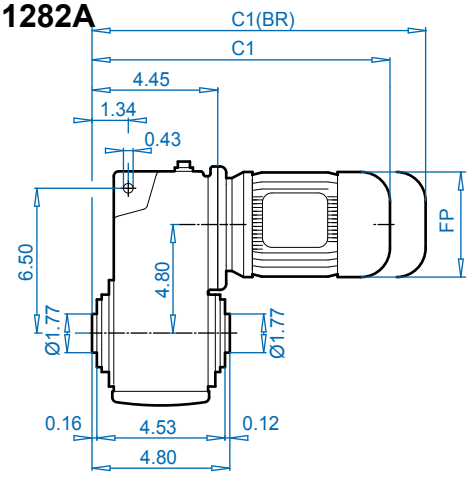


## SK 1282VF

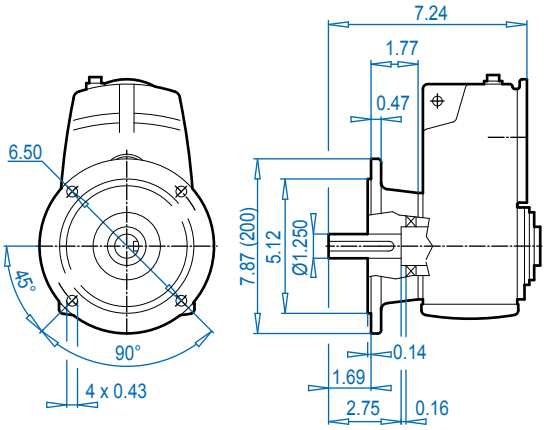


## SK 1282AF

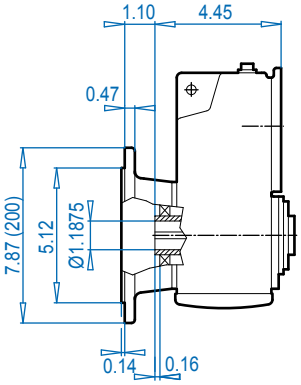


## SK 1282ASH

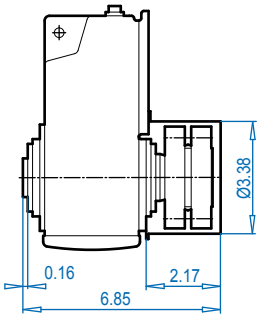


ALTERNATE SHAFTS SEE PAGES 388 - 393

## SK 1282V

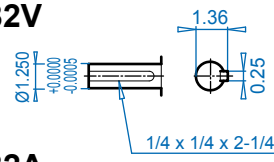


## SK 1282A

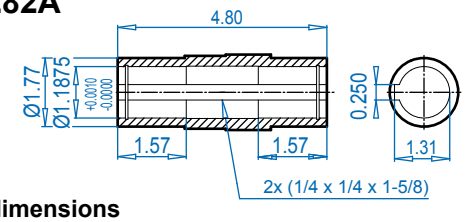


## SK 1282AB ⇨🕮 394

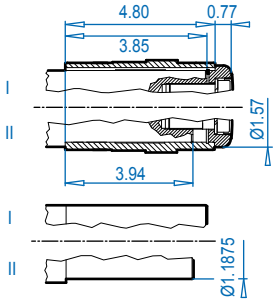


## SK 1282AS ⇨🕮 391

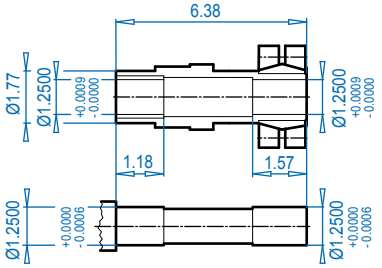


### Motor dimensions

| Standard efficiency | 63S/L | 71S/L | 80S/L | 90S/L | 100L | | For Other Connection Possibilities please see ⇨🕮 376 & 378 |
|---|---|---|---|---|---|---|---|
| Energy efficiency | | | 80LH | 90SH/LH | 100LH | 112MH | |
| AB | 4.53 | 4.88 | 5.59 | 5.79 | 6.65 | 7.05 | |
| AB (BR) | 4.84 | 5.24 | 5.63 | 5.83 | 6.26 | 6.69 | |
| C1 | 12.17 | 13.74 | 14.73 | 16.34 | 17.52 | 18.43 | |
| C1 (BR) | 14.37 | 16.03 | 17.25 | 19.29 | 21.10 | 22.09 | |
| C | 14.91 | 16.48 | 17.47 | 19.08 | 20.26 | 21.17 | |
| C (BR) | 17.11 | 18.77 | 19.99 | 22.03 | 23.84 | 24.83 | |
| FP | 4.84 | 5.43 | 6.14 | 6.92 | 7.63 | 8.58 | |



**(BR)** denotes Brakemotor


Send Quote Requests to info@automatedpt.com
Call +1(800)985-6929 To Order or Order Online At Nordgearmotors.com

DRIVESYSTEMS





# SK 1282 + NEMA

## SK 1282V

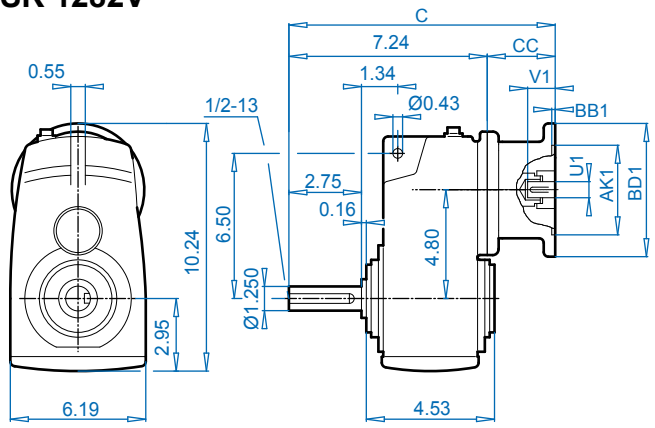


## SK 1282A

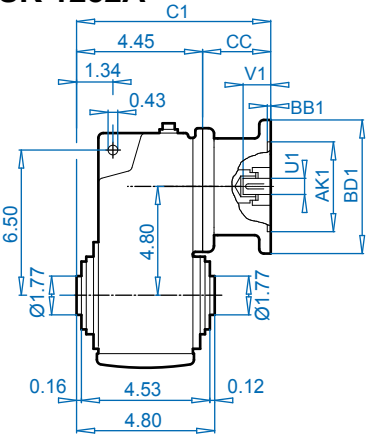


## NEMA Input

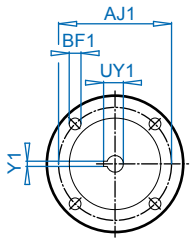


Dimensions in Inches
DIMENSIONS

## SK 1282VF

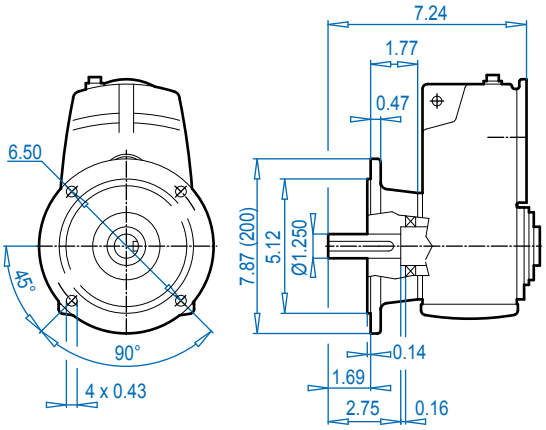


## SK 1282AF

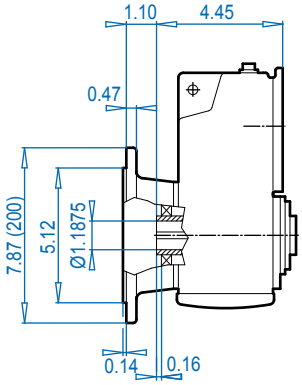


## SK 1282ASH

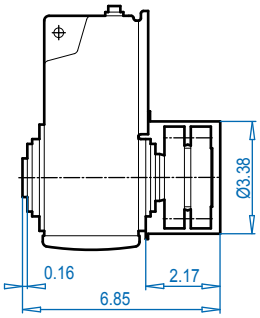


ALTERNATE SHAFTS SEE PAGES 388 - 393

## SK 1282V

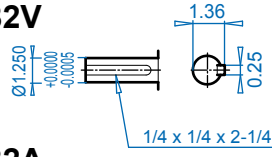


## SK 1282A

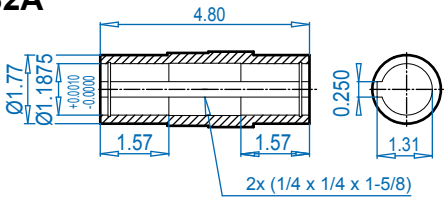


## SK 1282AB ⇨📖 394

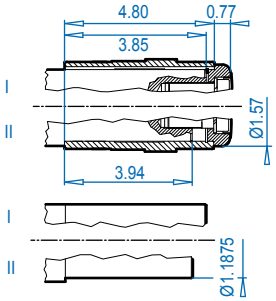


## SK 1282AS ⇨📖 391

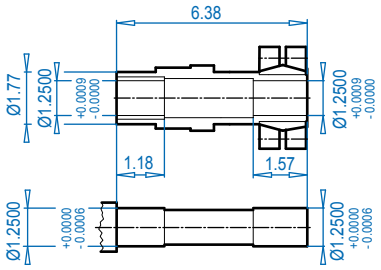


### NEMA Dimensions

| Type | AJ1 | AK1 | BB1 | BD1 | BF1 | U1 | V1 | UY1 | Y1 | C | C1 | CC |
|---|---|---|---|---|---|---|---|---|---|---|---|---|
| 56C | 5.88 | 4.500 | 0.18 | 6.54 | 0.43 | 0.625 | 2.06 | 0.71 | 0.188 | 11.70 | 8.95 | 4.50 |
| 140TC | 5.88 | 4.500 | 0.18 | 6.54 | 0.43 | 0.875 | 2.12 | 0.96 | 0.188 | 11.70 | 8.95 | 4.50 |
| 180TC | 7.25 | 8.500 | 0.23 | 9.17 | 0.59 | 1.125 | 2.62 | 1.24 | 0.250 | 12.85 | 10.10 | 5.65 |


Send Quote Requests to info@automatedpt.com
Call +1(800)985-6929 To Order or Order Online At Nordgearmotors.com

# SK 2282 + Motor




DRIVESYSTEMS



## SK 2282V

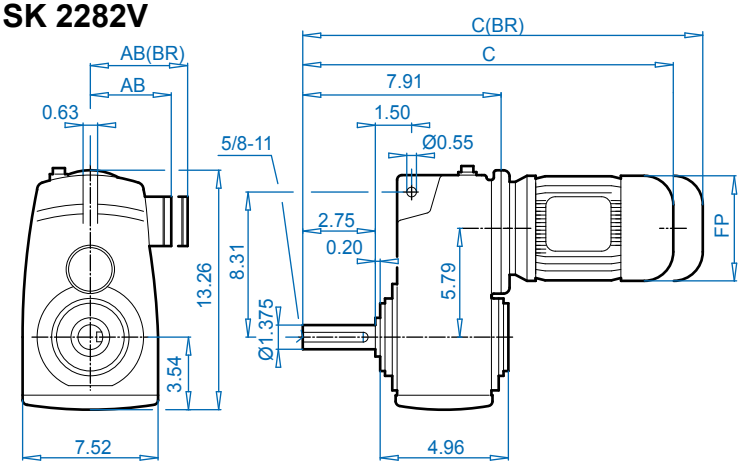


## SK 2282A

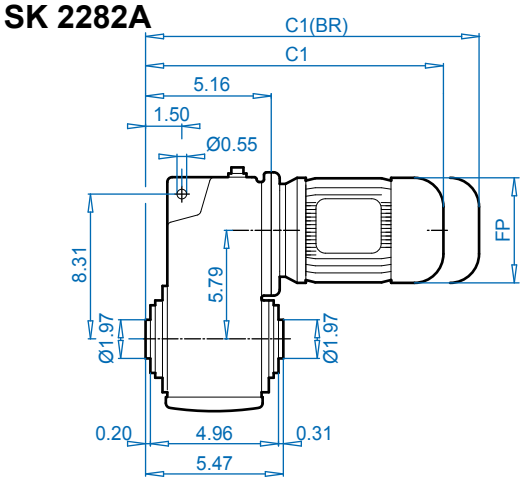


## SK 2282VF

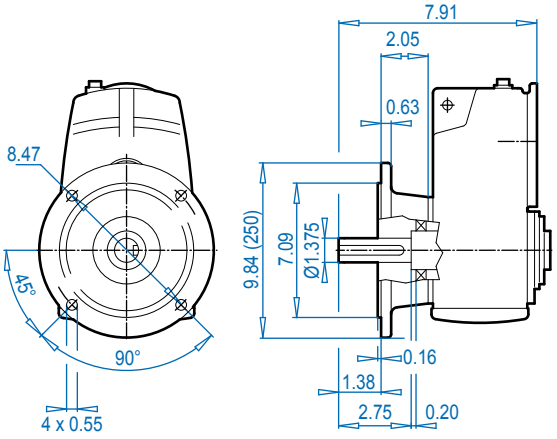


## SK 2282AF

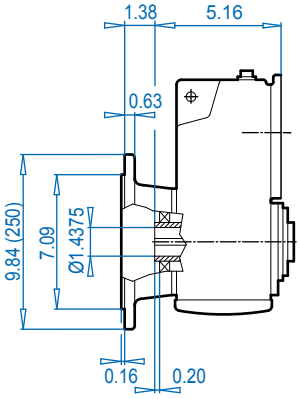


## SK 2282ASH

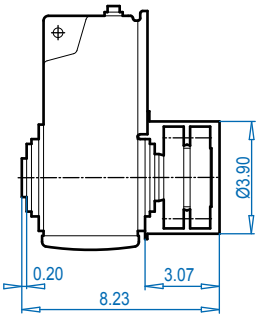


ALTERNATE SHAFTS SEE PAGES 388 - 393

## SK 2282V

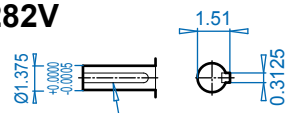


## SK 2282A

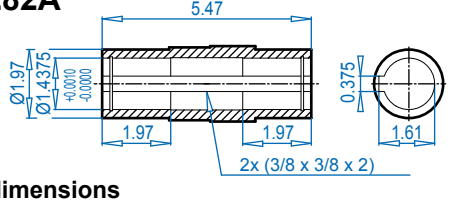


## SK 2282AB ⇨📖 394

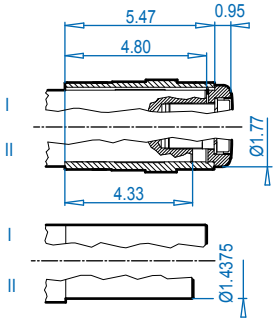


## SK 2282AS ⇨📖 391

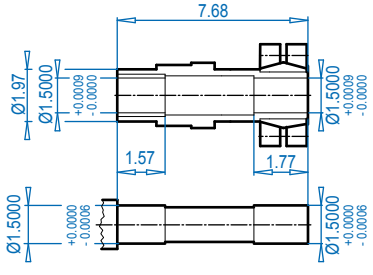


### Motor dimensions

| Standard efficiency | 71S/L | 80S/L | 90S/L | 100L | | | For Other Connection Possibilities please see ⇨📖 376 & 378 |
|---|---|---|---|---|---|---|---|
| Energy efficiency | | 80LH | 90SH/LH | 100LH | 112MH | | |
| AB | 4.88 | 5.59 | 5.79 | 6.65 | 7.05 | |  |
| AB (BR) | 5.24 | 5.63 | 5.83 | 6.26 | 6.69 | | |
| C1 | 14.22 | 15.20 | 16.81 | 18.00 | 18.90 | | |
| C1 (BR) | 16.50 | 17.72 | 19.77 | 21.58 | 22.56 | | |
| C | 16.97 | 17.95 | 19.56 | 20.75 | 21.65 | | |
| C (BR) | 19.25 | 20.47 | 22.52 | 24.33 | 25.31 | | |
| FP | 5.43 | 6.14 | 6.92 | 7.63 | 8.58 | | |

**(BR)** denotes Brakemotor


Send Quote Requests to info@automatedpt.com
Call +1(800)985-6929 To Order or Order Online At Nordgearmotors.com

DRIVESYSTEMS





# SK 2282 + NEMA

## SK 2282V

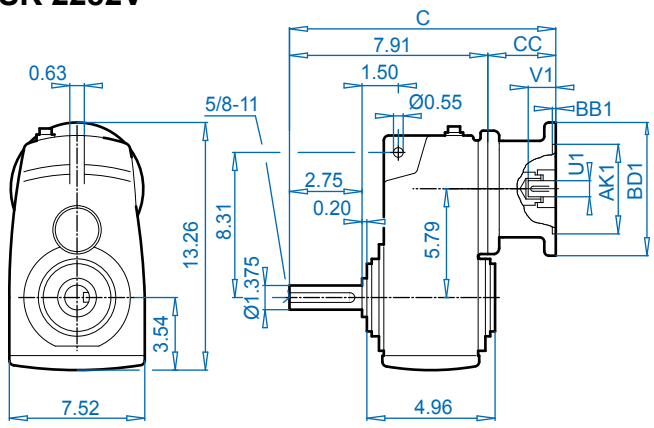


## SK 2282A

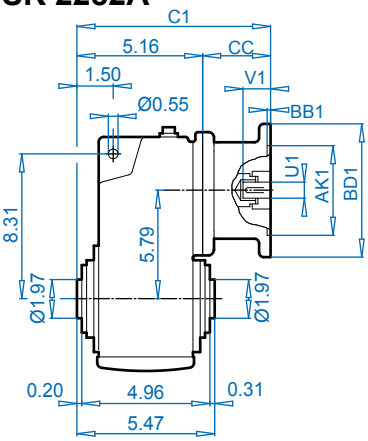


## NEMA Input

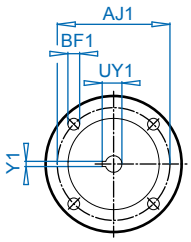


Dimensions in Inches
DIMENSIONS

## SK 2282VF

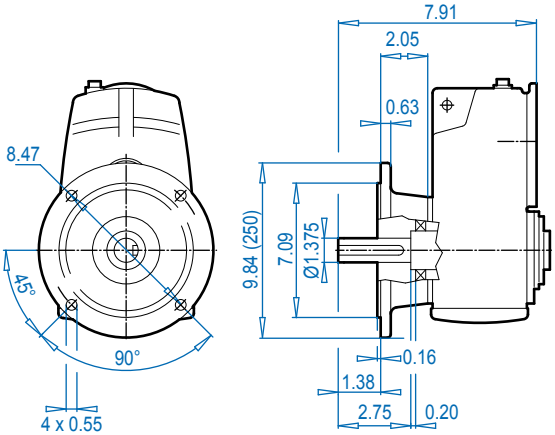


## SK 2282AF

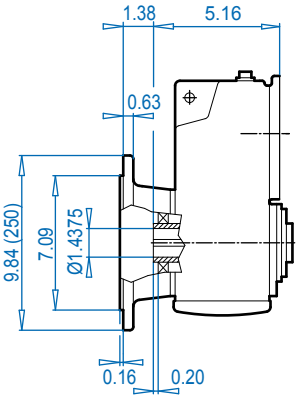


## SK 2282ASH

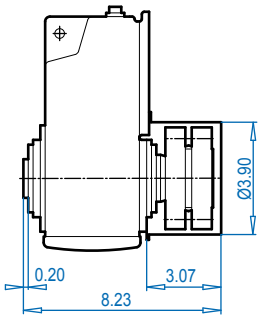


ALTERNATE SHAFTS SEE PAGES 388 - 393

## SK 2282V

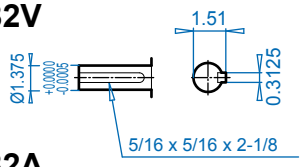


## SK 2282A

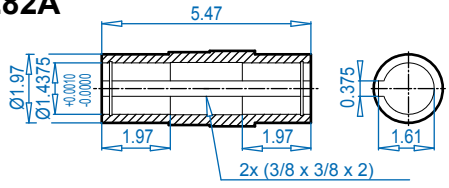


## SK 2282AB ⇨🕮 394

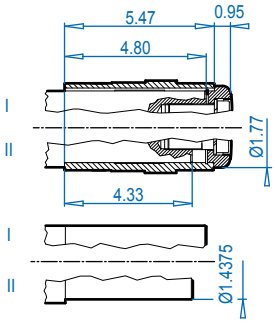


## SK 2282AS ⇨🕮 391

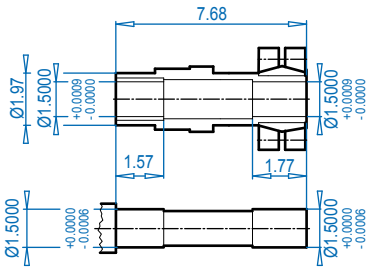


### NEMA Dimensions

| Type | AJ1 | AK1 | BB1 | BD1 | BF1 | U1 | V1 | UY1 | Y1 | C | C1 | CC |
|---|---|---|---|---|---|---|---|---|---|---|---|---|
| 56C | 5.88 | 4.500 | 0.18 | 6.54 | 0.43 | 0.625 | 2.06 | 0.71 | 0.188 | 12.52 | 9.76 | 4.61 |
| 140TC | 5.88 | 4.500 | 0.18 | 6.54 | 0.43 | 0.875 | 2.12 | 0.96 | 0.188 | 12.52 | 9.76 | 4.61 |
| 180TC | 7.25 | 8.500 | 0.23 | 9.17 | 0.59 | 1.125 | 2.62 | 1.24 | 0.250 | 13.42 | 10.77 | 5.51 |


Send Quote Requests to info@automatedpt.com
Call +1(800)985-6929 To Order or Order Online At Nordgearmotors.com

# SK 2382 + Motor





DRIVESYSTEMS



## SK 2382V

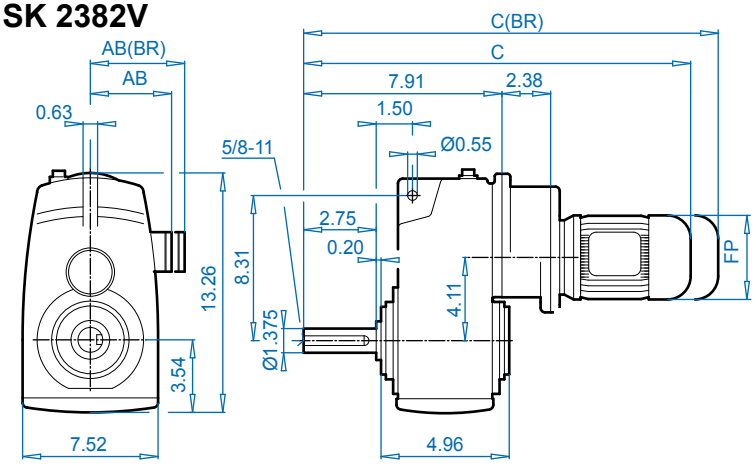


## SK 2382A

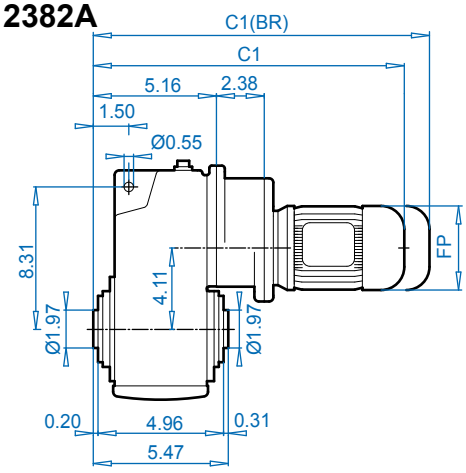


## SK 2382VF

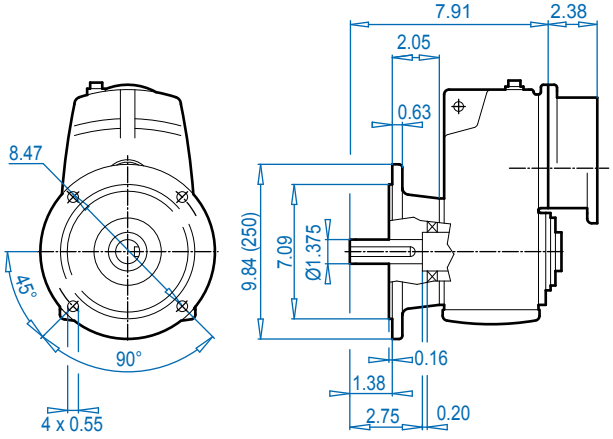


## SK 2382AF

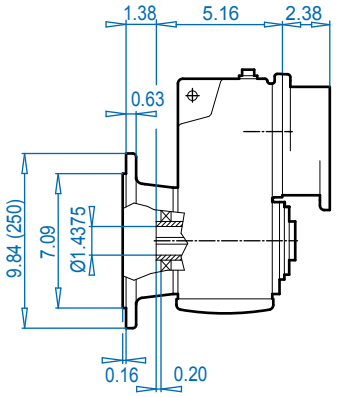


## SK 2382V

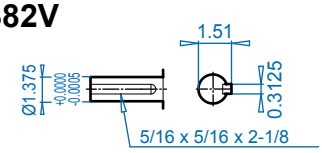


## SK 2382A

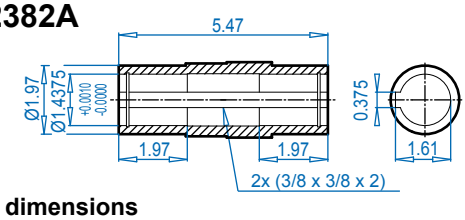


## SK 2382AB ⇨📖 394

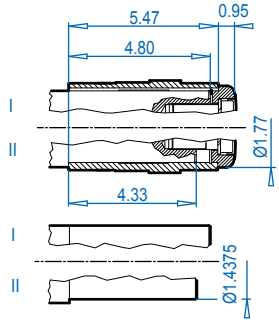


### Motor dimensions

| Standard efficiency | 63S/L | 71S/L | 80S/L | 90S | | | For Other Connection Possibilities please see ⇨📖 376 & 378 |
|---|---|---|---|---|---|---|---|
| Energy efficiency | | | 80LH | 90SH | | | |
| AB | 4.53 | 4.88 | 5.59 | 5.79 | | | |
| AB (BR) | 4.84 | 5.24 | 5.63 | 5.83 | | | |
| C1 | 15.24 | 16.81 | 17.80 | 19.41 | | | |
| C1 (BR) | 17.44 | 19.09 | 20.32 | 22.36 | | | |
| C | 17.99 | 19.56 | 20.55 | 22.16 | | | |
| C (BR) | 20.19 | 21.84 | 23.07 | 25.11 | | | |
| FP | 4.84 | 5.43 | 6.14 | 6.92 | | | |

**(BR)** denotes Brakemotor

ALTERNATE SHAFTS SEE PAGES 388 - 393


Send Quote Requests to info@automatedpt.com
Call +1(800)985-6929 To Order or Order Online At Nordgearmotors.com

DRIVESYSTEMS





# SK 2382 + NEMA

## SK 2382V

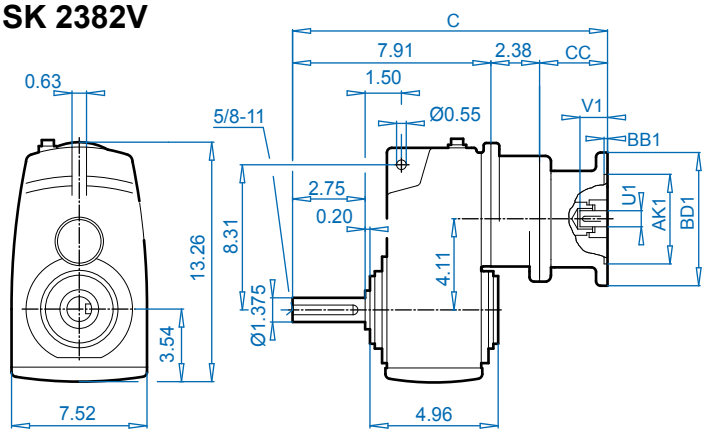


## SK 2382A

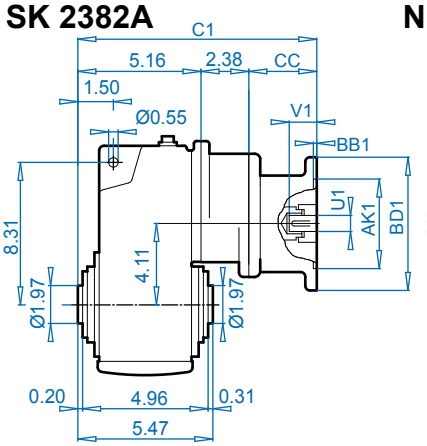


## NEMA Input

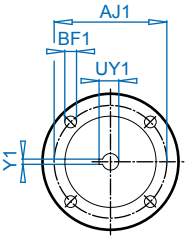


## SK 2382VF

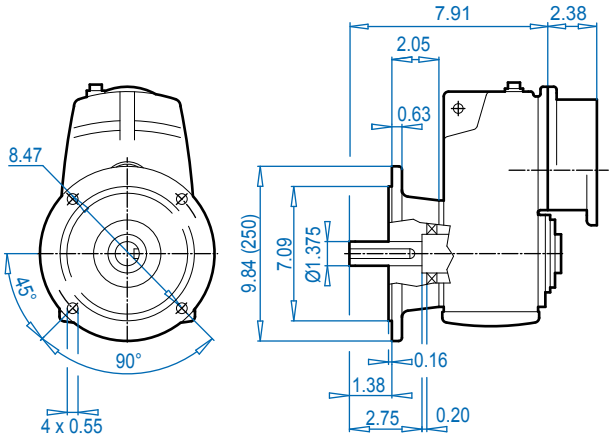


## SK 2382AF

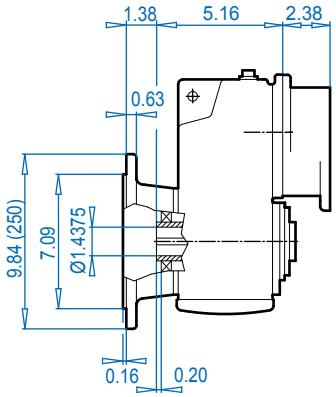


## SK 2382V

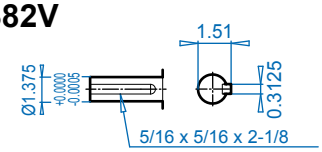


## SK 2382A

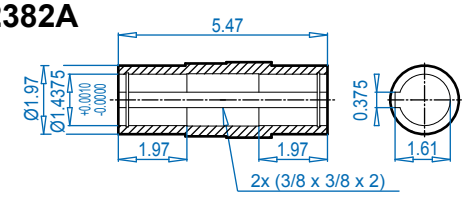


## SK 2382AB ⇨🕮 394

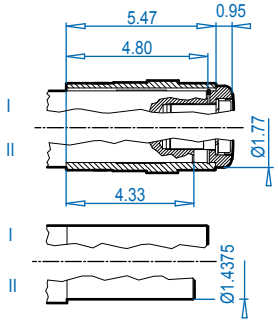


Dimensions in Inches
DIMENSIONS
ALTERNATE SHAFTS SEE PAGES 388 - 393

### NEMA Dimensions

| Type | AJ1 | AK1 | BB1 | BD1 | BF1 | U1 | V1 | UY1 | Y1 | C | C1 | CC |
|---|---|---|---|---|---|---|---|---|---|---|---|---|
| 56C | 5.88 | 4.500 | 0.18 | 6.54 | 0.43 | 0.625 | 2.06 | 0.71 | 0.188 | 14.77 | 12.02 | 4.61 |
| 140TC | 5.88 | 4.500 | 0.18 | 6.54 | 0.43 | 0.875 | 2.12 | 0.96 | 0.188 | 14.77 | 12.02 | 4.61 |


Send Quote Requests to info@automatedpt.com
Call +1(800)985-6929 To Order or Order Online At Nordgearmotors.com

# SK 3282 + Motor




DRIVESYSTEMS

DIMENSIONS — Dimensions in Inches

## SK 3282V

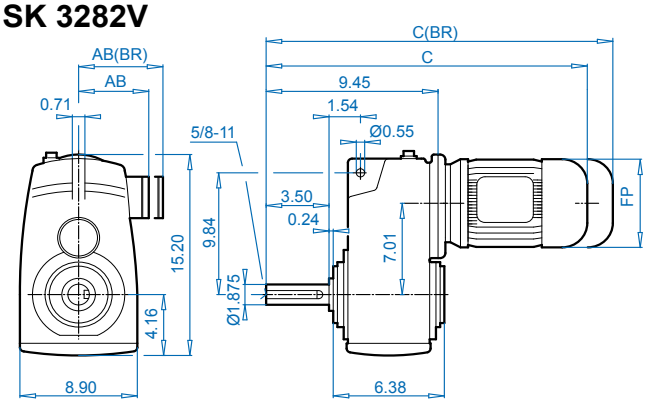


## SK 3282A

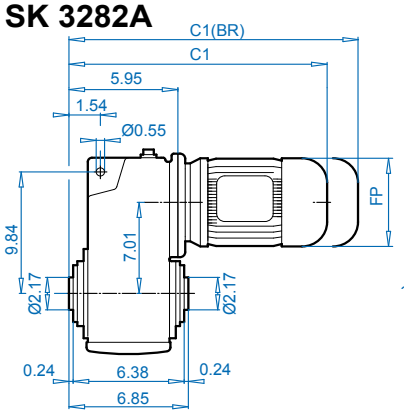


## SK 3282VF

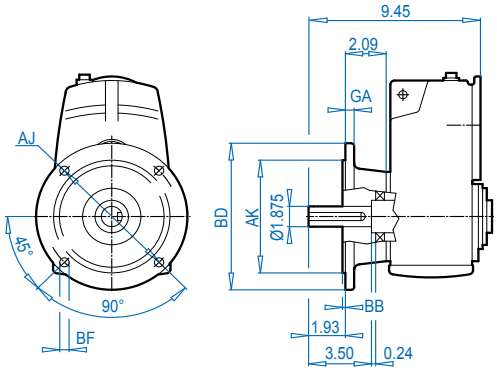


## SK 3282AF

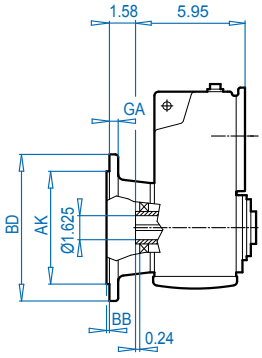


## SK 3282ASH

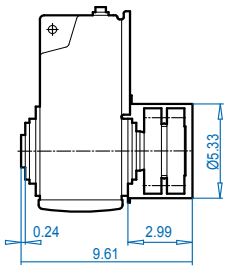


## SK 3282V

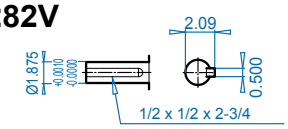


## SK 3282A

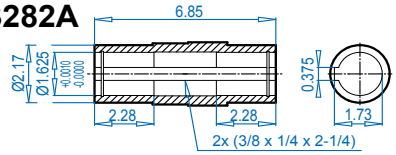


## SK 3282AB ⇨🕮 394

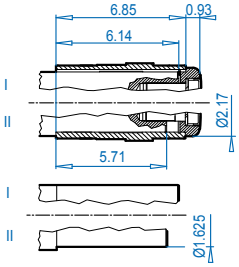


## SK 3282AS ⇨🕮 391

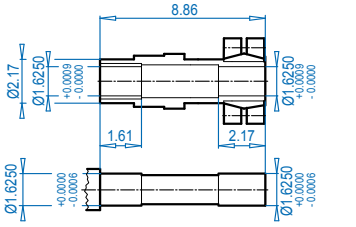


ALTERNATE SHAFTS SEE PAGES 388 - 393

### Mounting Flange

| BD (mm) | AJ | AK | BB | BF | GA |
|---|---|---|---|---|---|
| 9.84 (250) | 8.46 | 7.09 +0.0006 -0.0005 | 0.16 | 0.53 | 0.59 |
| 11.81 (300) | 10.43 | 9.06 +0.0000 -0.0013 | 0.16 | 0.55 | 0.79 |

### Motor dimensions

| Standard efficiency | 71S/L | 80S/L | 90S/L | 100L | | 132S/M | For Other Connection Possibilities please see ⇨🕮 376 & 378 |
|---|---|---|---|---|---|---|---|
| Energy efficiency | | 80LH | 90SH/LH | 100LH | 112MH | 132SH/MH | |
| AB | 4.88 | 5.59 | 5.79 | 6.65 | 7.05 | 8.03 |  |
| AB (BR) | 5.24 | 5.63 | 5.83 | 6.26 | 6.69 | 7.72 | |
| C1 | 15.00 | 15.99 | 17.60 | 18.78 | 19.69 | 23.07 | |
| C1 (BR) | 17.29 | 18.51 | 20.55 | 22.37 | 23.35 | 27.29 | |
| C | 18.50 | 19.49 | 21.10 | 22.28 | 23.19 | 26.57 | |
| C (BR) | 20.79 | 22.01 | 24.05 | 25.87 | 26.85 | 30.79 | |
| FP | 5.43 | 6.14 | 6.92 | 7.63 | 8.58 | 10.16 | |

**(BR)** denotes Brakemotor


Send Quote Requests to info@automatedpt.com
Call +1(800)985-6929 To Order or Order Online At Nordgearmotors.com

Send Quote Requests to info@automatedpt.com
Call +1(800)985-6929 To Order or Order Online At Nordgearmotors.com

DRIVESYSTEMS





# SK 3282 + NEMA

## SK 3282V

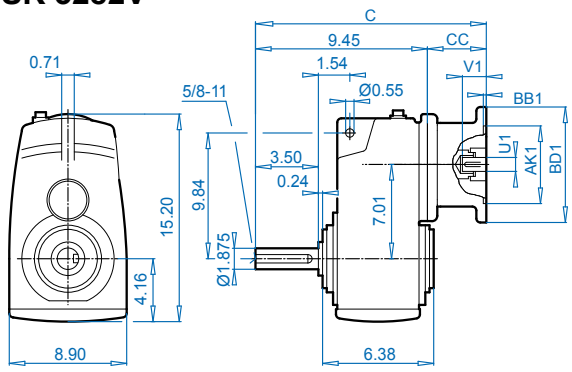


## SK 3282A

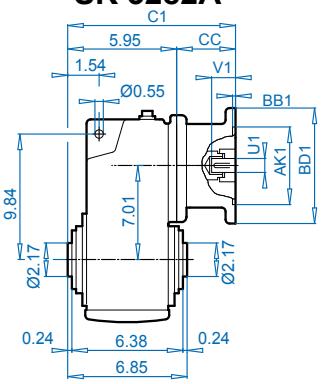


## NEMA Input

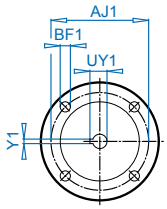


Dimensions in Inches
DIMENSIONS

## SK 3282VF

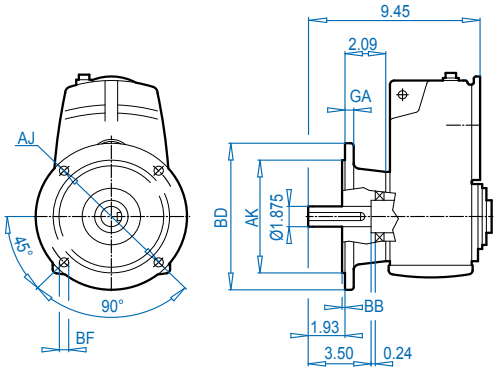


## SK 3282AF

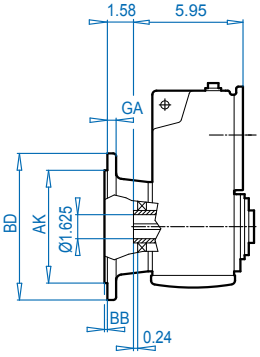


## SK 3282ASH

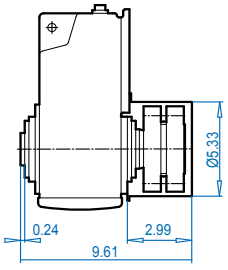


## SK 3282V

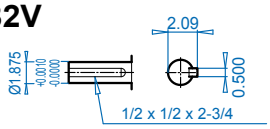


## SK 3282A

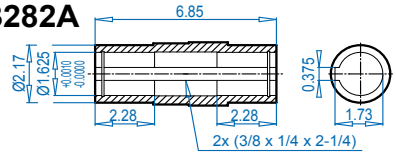


## SK 3282AB ⇨📖 394

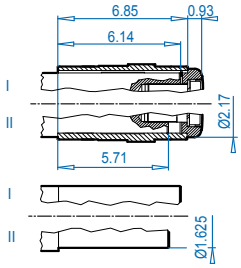


## SK 3282AS ⇨📖 391

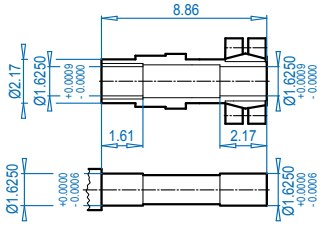


ALTERNATE SHAFTS SEE PAGES 388 - 393

### Mounting Flange

| BD (mm) | AJ | AK | BB | BF | GA |
|---|---|---|---|---|---|
| 9.84 (250) | 8.46 | 7.09 +0.0006 -0.0005 | 0.16 | 0.53 | 0.59 |
| 11.81 (300) | 10.43 | 9.06 +0.0000 -0.0013 | 0.16 | 0.55 | 0.79 |

### NEMA Dimensions

| Type | AJ1 | AK1 | BB1 | BD1 | BF1 | U1 | V1 | UY1 | Y1 | C | C1 | CC |
|---|---|---|---|---|---|---|---|---|---|---|---|---|
| **56C** | 5.88 | 4.500 | 0.18 | 6.54 | 0.43 | 0.625 | 2.06 | 0.71 | 0.188 | 14.04 | 10.54 | 4.60 |
| **140TC** | 5.88 | 4.500 | 0.18 | 6.54 | 0.43 | 0.875 | 2.12 | 0.96 | 0.188 | 14.04 | 10.54 | 4.60 |
| **180TC** | 7.25 | 8.500 | 0.23 | 9.17 | 0.59 | 1.125 | 2.62 | 1.24 | 0.250 | 16.04 | 12.54 | 6.60 |
| **210TC** | 7.25 | 8.500 | 0.39 | 9.17 | 0.59 | 1.375 | 3.12 | 1.52 | 0.312 | 16.04 | 12.54 | 6.60 |


Send Quote Requests to info@automatedpt.com
Call +1(800)985-6929 To Order or Order Online At Nordgearmotors.com

# SK 3382 + Motor



DRIVESYSTEMS



## SK 3382V

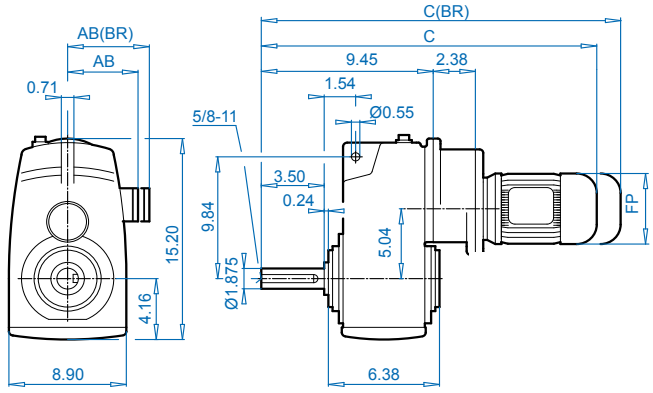


## SK 3382A

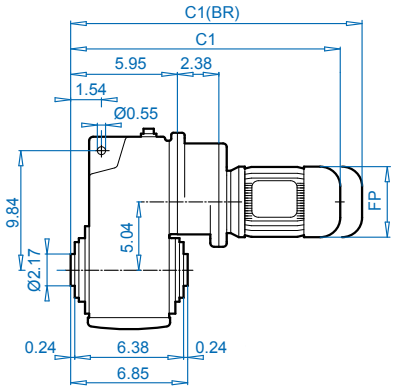


## SK 3382VF

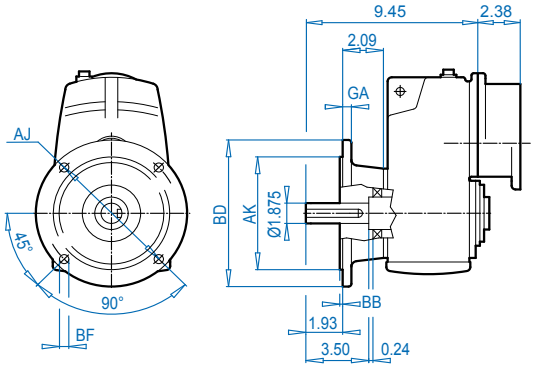


## SK 3382AF

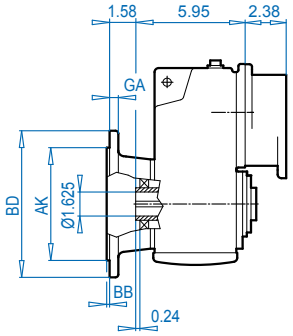


## SK 3382ASH

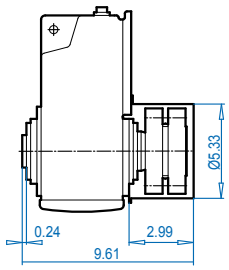


ALTERNATE SHAFTS SEE PAGES 388 - 393

## SK 3382V

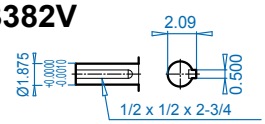


## SK 3382A

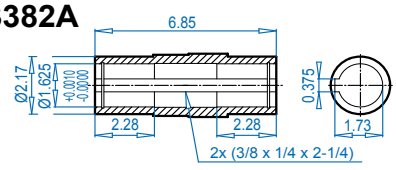


## SK 3382AB ⇨📖 394

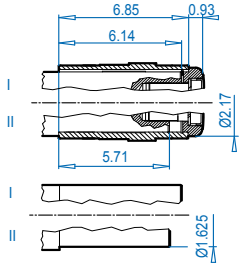


## SK 3382AS ⇨📖 391

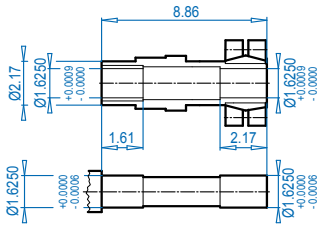


### Motor dimensions

| Standard eff. | 63S/L | 71S/L | 80S/L | For Other Connection Possibilities please see ⇨📖 376 & 378 |
|---|---|---|---|---|
| Energy eff. | | | 80LH | |
| AB | 4.53 | 4.88 | 5.59 | |
| AB (BR) | 4.84 | 5.24 | 5.63 | |
| C1 | 16.02 | 17.59 | 18.58 | |
| C1 (BR) | 18.22 | 19.87 | 21.10 | |
| C | 19.52 | 21.09 | 22.08 | |
| C (BR) | 21.72 | 23.37 | 24.60 | |
| FP | 4.84 | 5.43 | 6.14 | |



**(BR)** denotes Brakemotor

### Mounting Flange

| BD (mm) | AJ | AK | BB | BF | GA |
|---|---|---|---|---|---|
| 9.84 (250) | 8.46 | 7.09 +0.0006 -0.0005 | 0.16 | 0.53 | 0.59 |
| 11.81 (300) | 10.43 | 9.06 +0.0000 -0.0013 | 0.16 | 0.55 | 0.79 |


Send Quote Requests to info@automatedpt.com
Call +1(800)985-6929 To Order or Order Online At Nordgearmotors.com

DRIVESYSTEMS





# SK 3382 + NEMA

## SK 3382V

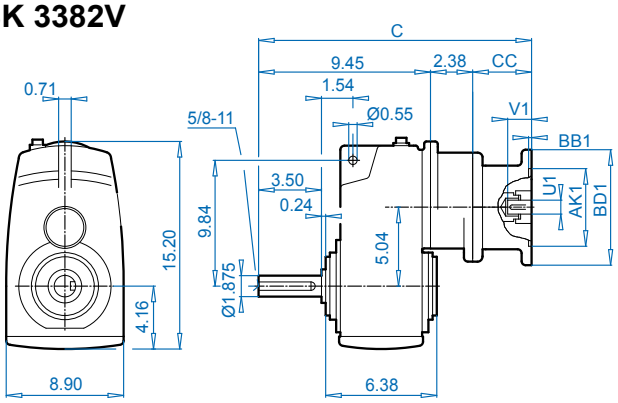


## SK 3382A

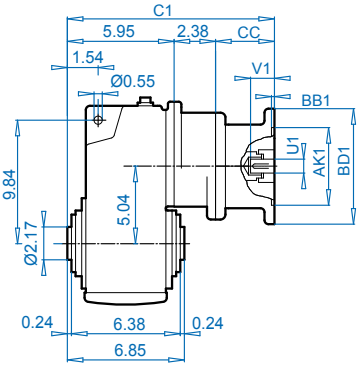


## NEMA Input

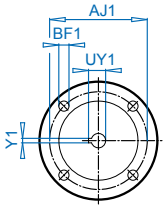


## SK 3382VF

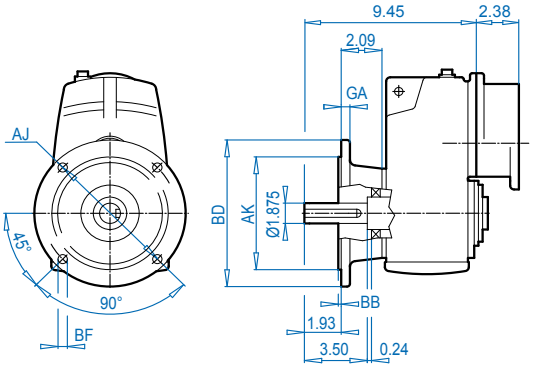


## SK 3382AF

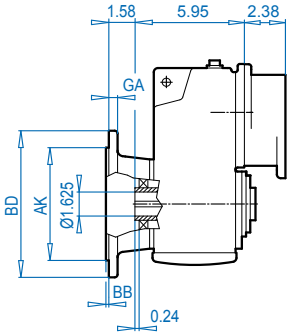


## SK 3382ASH

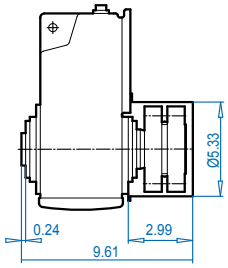


## SK 3382V

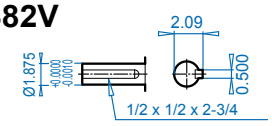


## SK 3382A

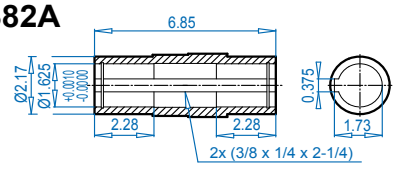


## SK 3382AB ⇨📖 394

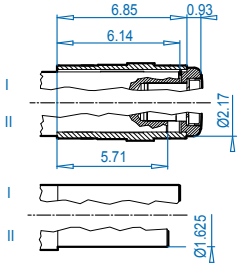


## SK 3382AS ⇨📖 391

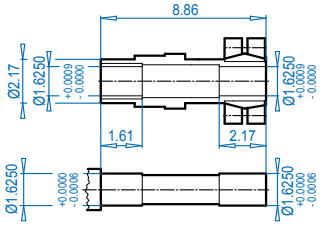


### Mounting Flange

| BD (mm) | AJ | AK | BB | BF | GA |
|---|---|---|---|---|---|
| 9.84 (250) | 8.46 | 7.09 +0.0006 -0.0005 | 0.16 | 0.53 | 0.59 |
| 11.81 (300) | 10.43 | 9.06 +0.0000 -0.0013 | 0.16 | 0.55 | 0.79 |

### NEMA Dimensions

| Type | AJ1 | AK1 | BB1 | BD1 | BF1 | U1 | V1 | UY1 | Y1 | C | C1 | CC |
|---|---|---|---|---|---|---|---|---|---|---|---|---|
| 56C | 5.88 | 4.500 | 0.18 | 6.54 | 0.43 | 0.625 | 2.06 | 0.71 | 0.188 | 11.06 | 8.94 | 4.45 |
| 140TC | 5.88 | 4.500 | 0.18 | 6.54 | 0.43 | 0.875 | 2.12 | 0.96 | 0.188 | 11.06 | 8.94 | 4.45 |




Send Quote Requests to info@automatedpt.com
Call +1(800)985-6929 To Order or Order Online At Nordgearmotors.com

# SK 4282 + Motor





DRIVESYSTEMS



## SK 4282V

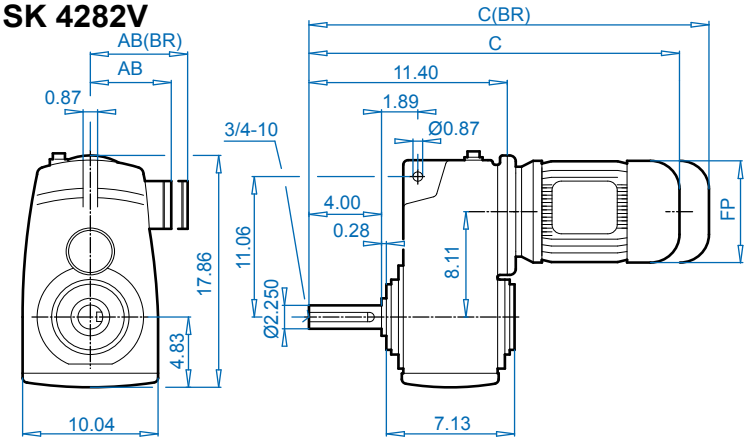


## SK 4282A

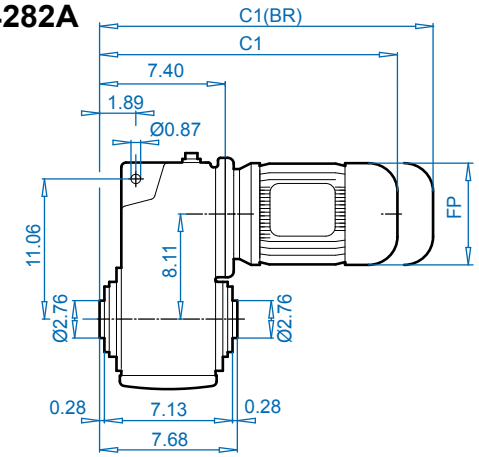


## SK 4282VF

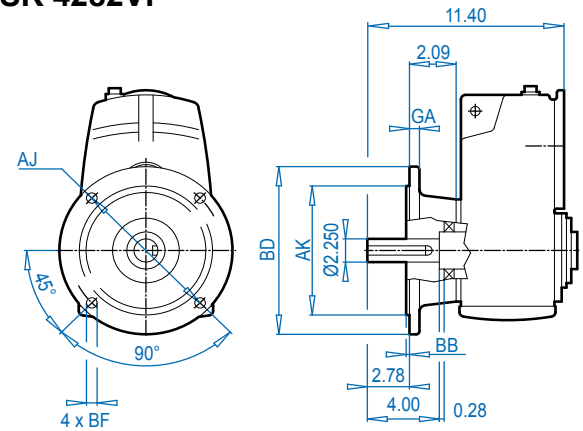


## SK 4282AF

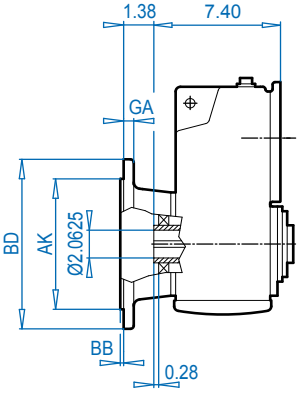


## SK 4282ASH

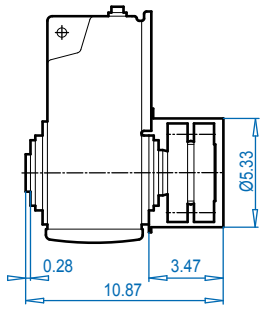


## SK 4282V

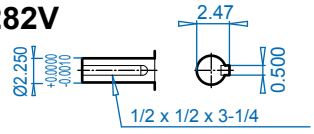


## SK 4282A

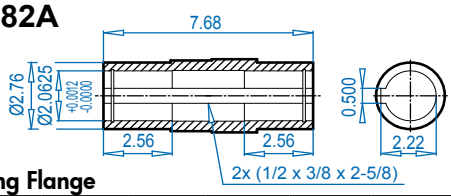


## SK 4282AB

⇨🕮 394

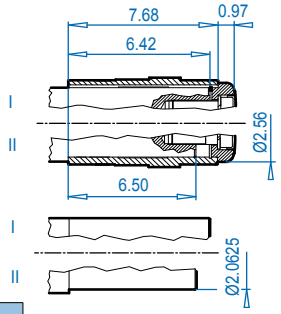


## SK 4282AS

⇨🕮 391

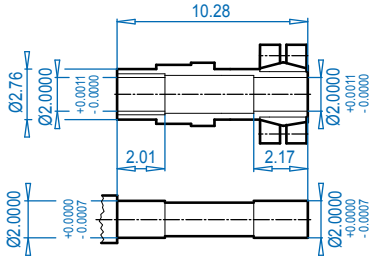


### Mounting Flange

| BD (mm) | AJ | AK | BB | BF | GA |
|---|---|---|---|---|---|
| 9.84 (250) | 8.46 | 7.09 $^{+0.0006}_{-0.0005}$ | 0.16 | 0.55 | 0.63 |
| 11.81 (300) | 10.43 | 9.06 $^{+0.0000}_{-0.0013}$ | 0.16 | 0.55 | 0.79 |

### Motor dimensions

| Standard efficiency | 90S/L | 100L | | 132S/M | 160M/L | | For Other Connection Possibilities please see ⇨🕮 376 & 378 |
|---|---|---|---|---|---|---|---|
| Energy efficiency | 90SH/LH | 100LH | 112MH | 132SH/MH | 160MH | 160LH | |
| **AB** | 5.79 | 6.65 | 7.05 | 8.03 | 9.53 | 9.53 |  |
| **AB (BR)** | 5.83 | 6.26 | 6.69 | 7.72 | 9.53 | 9.53 | |
| **C1** | 18.31 | 19.49 | 20.40 | 23.78 | 26.26 | 27.84 | |
| **C1 (BR)** | 21.26 | 23.08 | 24.06 | 28.00 | 32.84 | 34.57 | |
| **C** | 22.31 | 23.49 | 24.40 | 27.78 | 30.26 | 31.84 | |
| **C (BR)** | 25.26 | 27.08 | 28.06 | 32.00 | 36.84 | 38.57 | |
| **FP** | 6.92 | 7.63 | 8.58 | 10.16 | 12.60 | 12.60 | |

**(BR)** denotes Brakemotor

ALTERNATE SHAFTS SEE PAGES 388 - 393


Send Quote Requests to info@automatedpt.com
Call +1(800)985-6929 To Order or Order Online At Nordgearmotors.com

DRIVESYSTEMS





# SK 4282 + NEMA

## SK 4282V

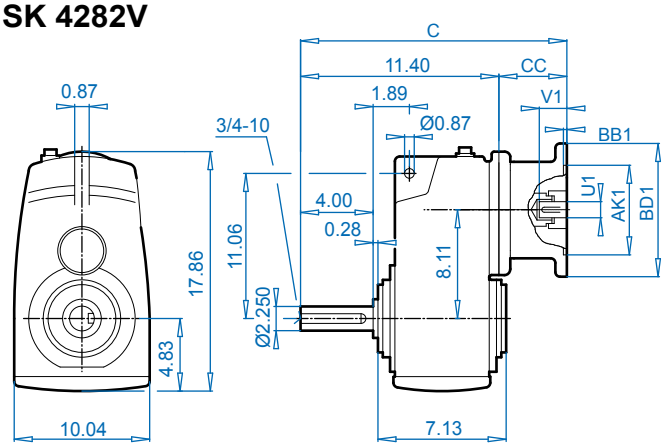


## SK 4282A

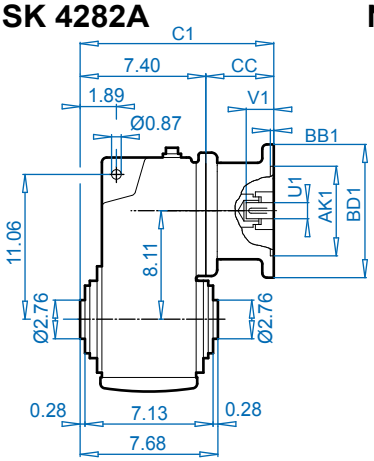


## NEMA Input

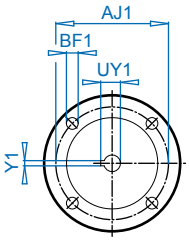


Dimensions in Inches
DIMENSIONS

## SK 4282VF

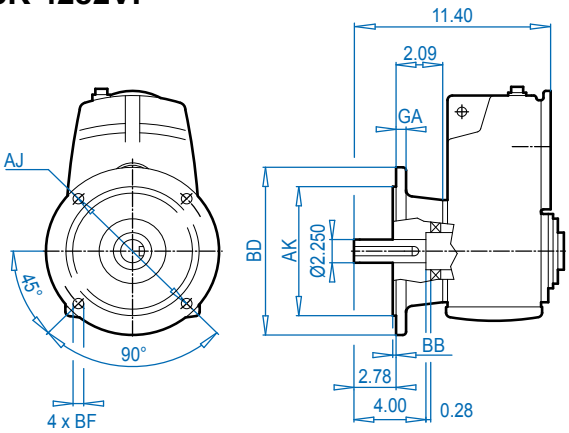


## SK 4282AF

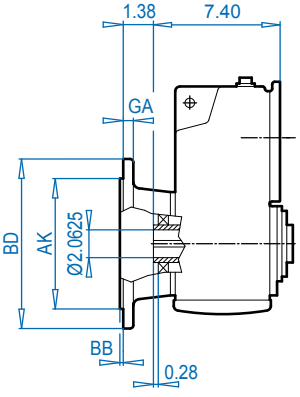


## SK 4282ASH

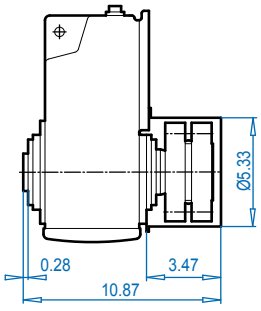


## SK 4282V

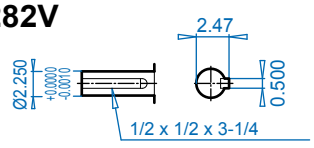


## SK 4282A

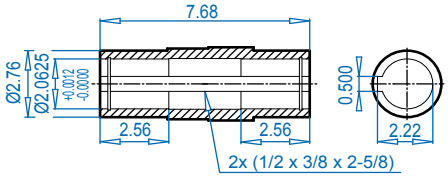


## SK 4282AB ⇨🕮 394

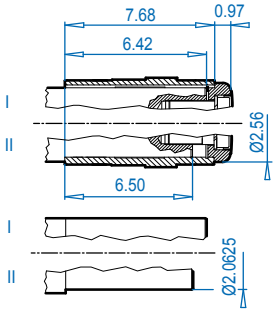


## SK 4282AS ⇨🕮 391

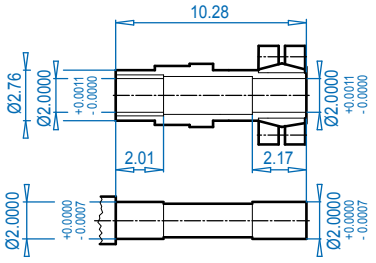


### Mounting Flange

| BD (mm) | AJ | AK | BB | BF | GA |
|---|---|---|---|---|---|
| 9.84 (250) | 8.46 | 7.09 $^{+0.0006}_{-0.0005}$ | 0.16 | 0.55 | 0.63 |
| 11.81 (300) | 10.43 | 9.06 $^{+0.0000}_{-0.0013}$ | 0.16 | 0.55 | 0.79 |

### NEMA Dimensions

| Type | AJ1 | AK1 | BB1 | BD1 | BF1 | U1 | V1 | UY1 | Y1 | C | C1 | CC |
|---|---|---|---|---|---|---|---|---|---|---|---|---|
| **56C** | 5.88 | 4.500 | 0.18 | 6.54 | 0.43 | 0.625 | 2.06 | 0.71 | 0.188 | 15.74 | 11.74 | 4.30 |
| **140TC** | 5.88 | 4.500 | 0.18 | 6.54 | 0.43 | 0.875 | 2.12 | 0.96 | 0.188 | 15.74 | 11.74 | 4.30 |
| **180TC** | 7.25 | 8.500 | 0.23 | 9.17 | 0.59 | 1.125 | 2.62 | 1.24 | 0.250 | 19.34 | 15.34 | 7.90 |
| **210TC** | 7.25 | 8.500 | 0.39 | 9.17 | 0.59 | 1.375 | 3.12 | 1.52 | 0.312 | 19.34 | 15.34 | 7.90 |
| **250TC** | 7.25 | 8.500 | 0.23 | 9.17 | 0.59 | 1.625 | 3.75 | 1.80 | 0.375 | 19.34 | 15.34 | 7.90 |

ALTERNATE SHAFTS SEE PAGES 388 - 393


Send Quote Requests to info@automatedpt.com
Call +1(800)985-6929 To Order or Order Online At Nordgearmotors.com

# SK 4382 + Motor





DRIVESYSTEMS



## SK 4382V

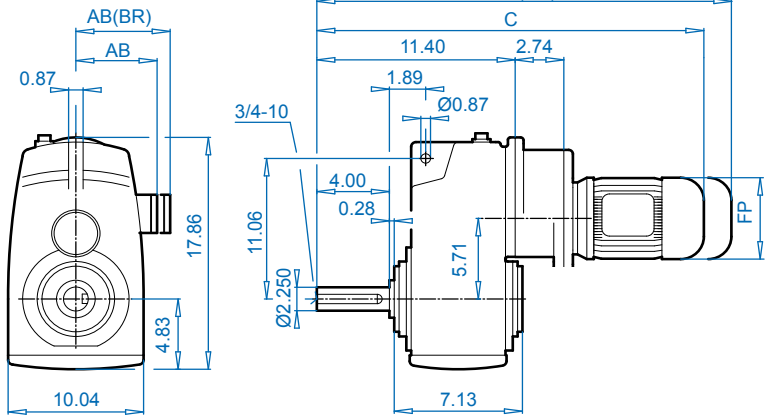


## SK 4382A

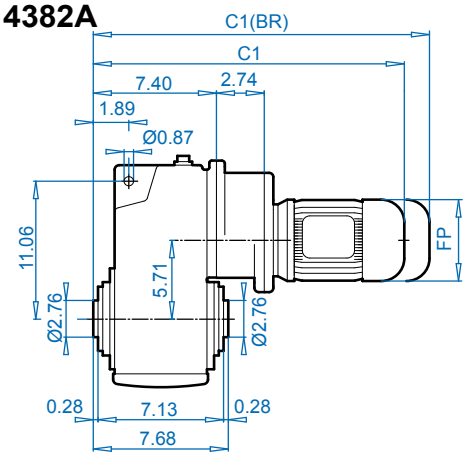


## SK 4382VF

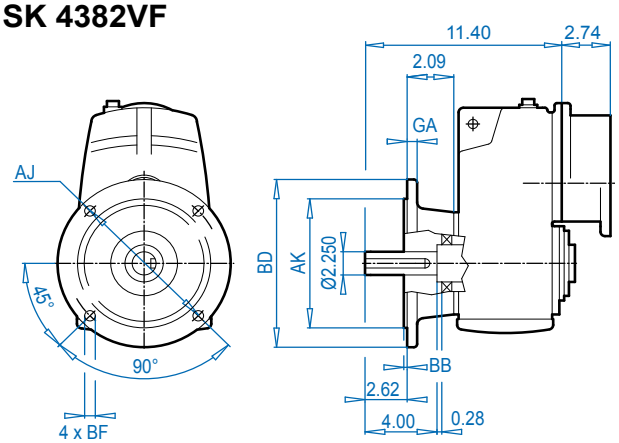


## SK 4382AF

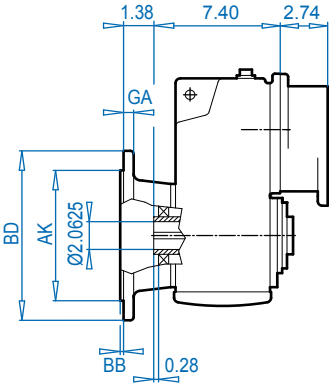


## SK 4382V

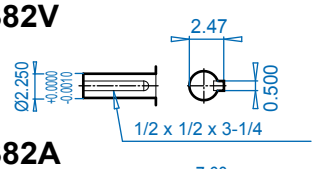


## SK 4382A

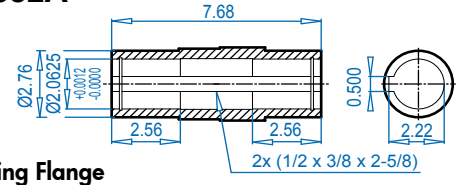


## SK 4382AB

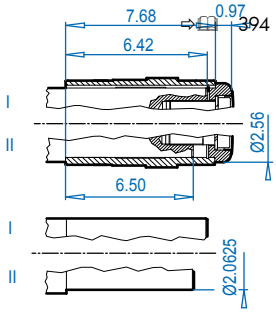


### Mounting Flange

| BD (mm) | AJ | AK | BB | BF | GA |
|---|---|---|---|---|---|
| 9.84 (250) | 8.46 | 7.09 +0.0006 -0.0005 | 0.16 | 0.55 | 0.63 |
| 11.81 (300) | 10.43 | 9.06 +0.0000 -0.0013 | 0.16 | 0.55 | 0.79 |

### Motor dimensions

| Standard efficiency | 71S/L | 80S/L | 90S/L | 100L | | | For Other Connection Possibilities please see ⇨🕮 376 & 378 |
|---|---|---|---|---|---|---|---|
| Energy efficiency | | 80LH | 90SH/LH | 100LH | 112MH | | |
| AB | 4.88 | 5.59 | 5.79 | 6.65 | 7.05 | | |
| AB (BR) | 5.24 | 5.63 | 5.83 | 6.26 | 6.69 | | |
| C1 | 19.22 | 20.20 | 21.81 | 22.99 | 23.90 | | |
| C1 (BR) | 21.50 | 22.72 | 24.77 | 26.58 | 27.56 | | |
| C | 23.22 | 24.20 | 25.81 | 26.99 | 27.90 | | |
| C (BR) | 25.50 | 26.72 | 28.77 | 30.58 | 31.56 | | |
| FP | 5.43 | 6.14 | 6.92 | 7.63 | 8.58 | | |

**(BR)** denotes Brakemotor

ALTERNATE SHAFTS SEE PAGES 388 - 393


Send Quote Requests to info@automatedpt.com
Call +1(800)985-6929 To Order or Order Online At Nordgearmotors.com

DRIVESYSTEMS





# SK 4382 + NEMA

## SK 4382V

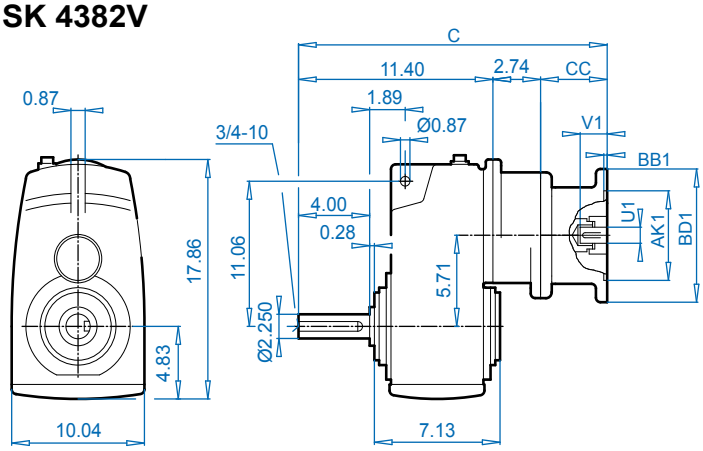


## SK 4382A

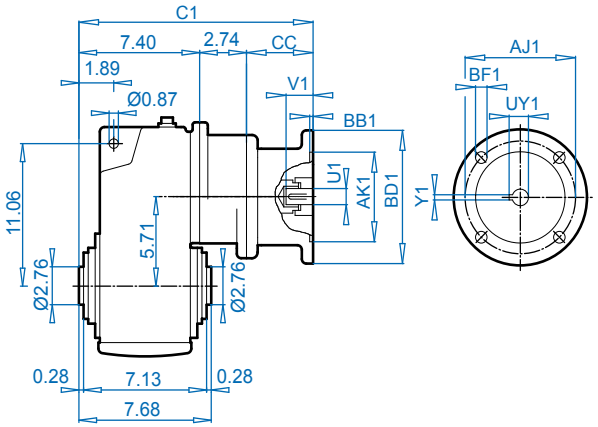


## NEMA Input




## SK 4382VF

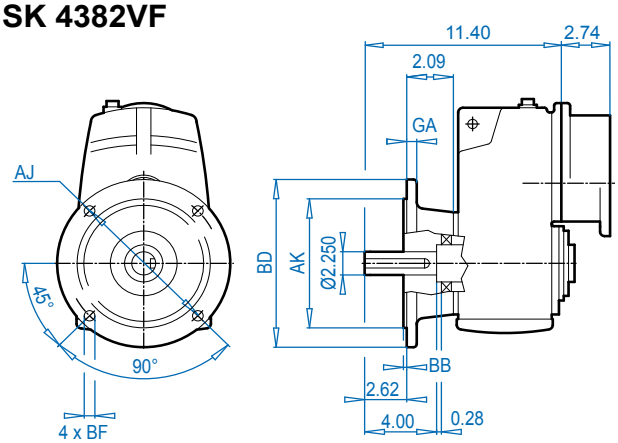


## SK 4382AF

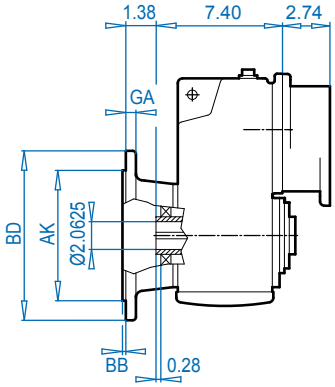


## SK 4382V

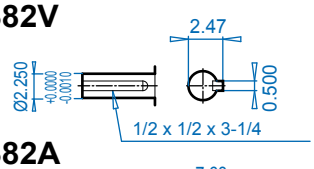


## SK 4382A

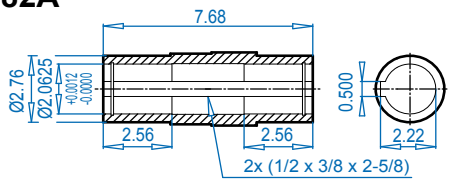


## SK 4382AB

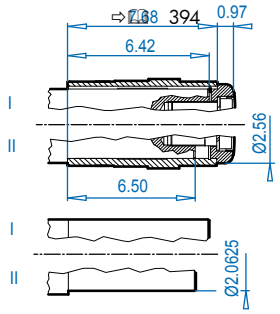


### Mounting Flange

| BD (mm) | AJ | AK | BB | BF | GA |
|---|---|---|---|---|---|
| 9.84 (250) | 8.46 | 7.09 +0.0006 -0.0005 | 0.16 | 0.55 | 0.63 |
| 11.81 (300) | 10.43 | 9.06 +0.0000 -0.0013 | 0.16 | 0.55 | 0.79 |

### NEMA Dimensions

| Type | AJ1 | AK1 | BB1 | BD1 | BF1 | U1 | V1 | UY1 | Y1 | C | C1 | CC |
|---|---|---|---|---|---|---|---|---|---|---|---|---|
| 56C | 5.88 | 4.500 | 0.18 | 6.54 | 0.43 | 0.625 | 2.06 | 0.71 | 0.188 | 18.76 | 14.76 | 4.60 |
| 140TC | 5.88 | 4.500 | 0.18 | 6.54 | 0.43 | 0.875 | 2.12 | 0.96 | 0.188 | 18.76 | 14.76 | 4.60 |
| 180TC | 7.25 | 8.500 | 0.23 | 9.17 | 0.59 | 1.125 | 2.62 | 1.24 | 0.250 | 20.76 | 16.76 | 6.60 |

Dimensions in Inches
DIMENSIONS
ALTERNATE SHAFTS SEE PAGES 388 - 393


Send Quote Requests to info@automatedpt.com
Call +1(800)985-6929 To Order or Order Online At Nordgearmotors.com

# SK 5282 + Motor




DRIVESYSTEMS

DIMENSIONS
Dimensions in Inches

## SK 5282V

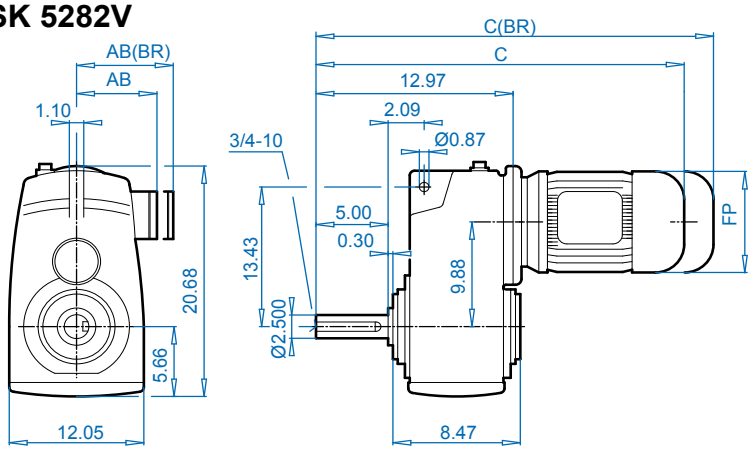


## SK 5282A

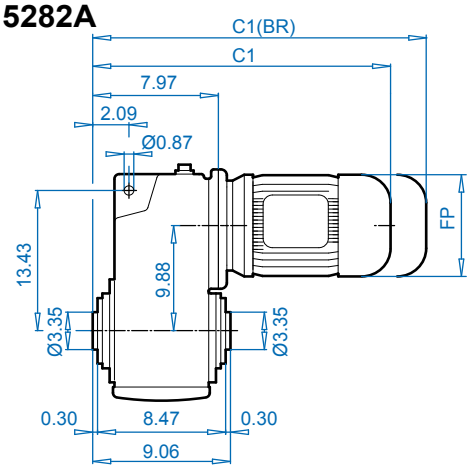


## SK 5282VF

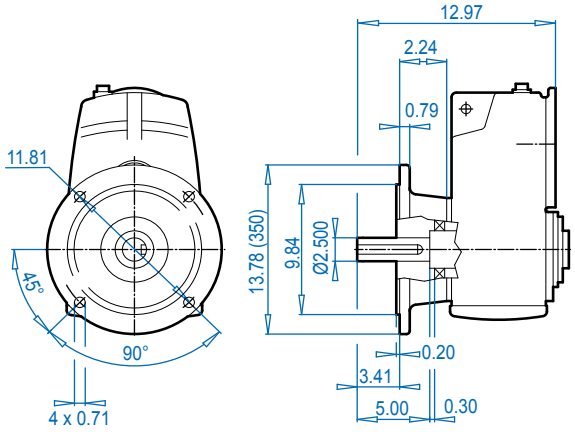


## SK 5282AF

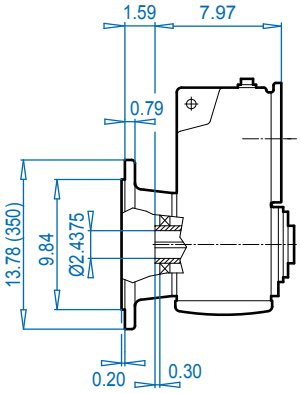


## SK 5282ASH

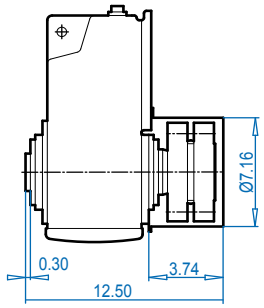


ALTERNATE SHAFTS SEE PAGES 388 - 393

## SK 5282V

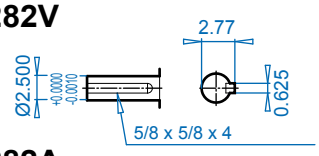


## SK 5282A

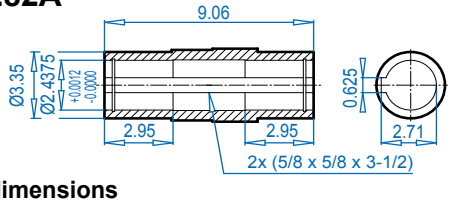


## SK 5282AB ⇨📖 394

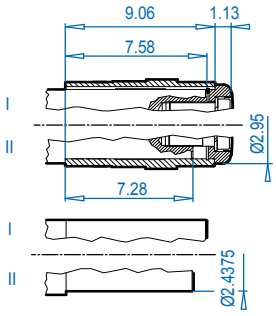


## SK 5282AS ⇨📖 391

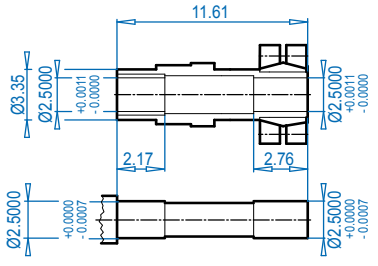


### Motor dimensions

| Standard eff. | 90S/L | 100L | | 132S/M | 160M/L | | 180MX/LX | | For Other Connection Possibilities please see ⇨📖 376 & 378 |
|---|---|---|---|---|---|---|---|---|---|
| Energy eff. | 90SH/LH | 100LH | 112MH | 132SH/MH | 160MH | 160LH | | 180MH/LH | |
| AB | 5.79 | 6.65 | 7.05 | 8.03 | 8.90 | 8.90 | 8.90 | 10.20 |  |
| AB (BR) | 5.83 | 6.26 | 6.69 | 7.72 | 8.90 | 8.90 | 8.90 | 10.20 | |
| C1 | 18.86 | 20.04 | 20.95 | 24.34 | 26.82 | 28.39 | 28.39 | 32.49 | |
| C1 (BR) | 21.82 | 23.63 | 24.61 | 28.55 | 33.39 | 35.12 | 35.12 | 36.62 | |
| C | 23.86 | 25.04 | 25.95 | 29.34 | 31.82 | 33.39 | 33.39 | 37.49 | |
| C (BR) | 26.82 | 28.63 | 29.61 | 33.55 | 38.39 | 40.12 | 40.12 | 41.62 | |
| FP | 6.92 | 7.63 | 8.58 | 10.16 | 12.60 | 12.60 | 12.60 | 14.09 | |

**(BR)** denotes Brakemotor


Send Quote Requests to info@automatedpt.com
Call +1(800)985-6929 To Order or Order Online At Nordgearmotors.com

DRIVESYSTEMS





# SK 5282 + NEMA

## SK 5282V

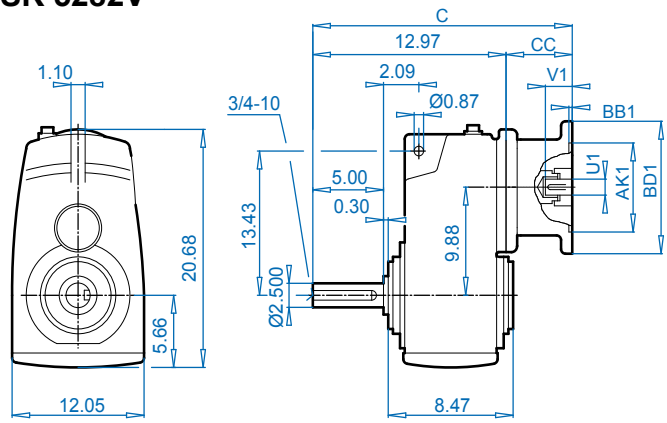


## SK 5282A

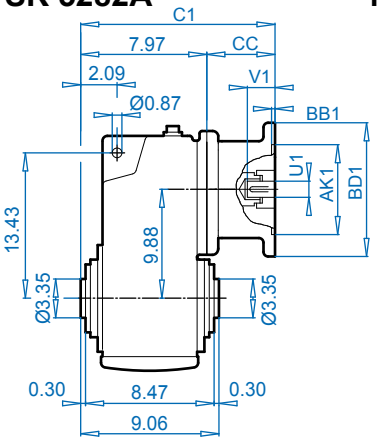


## NEMA Input

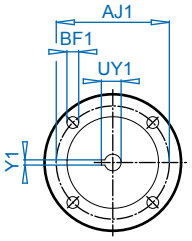


Dimensions in Inches
DIMENSIONS

## SK 5282VF

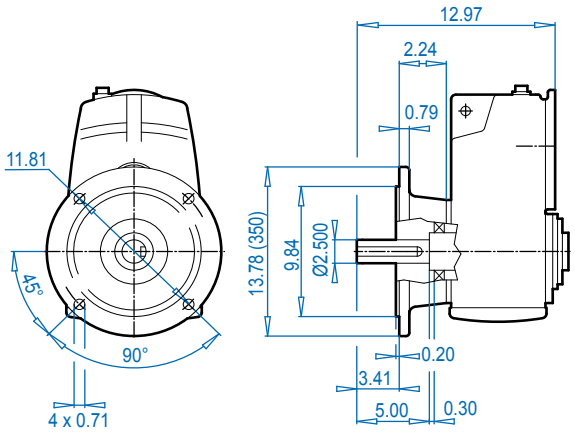


## SK 5282AF

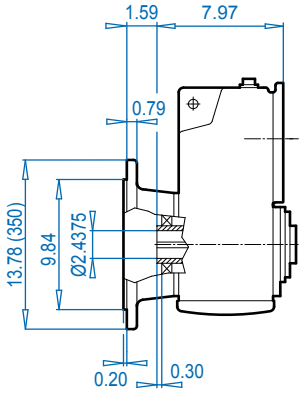


## SK 5282ASH

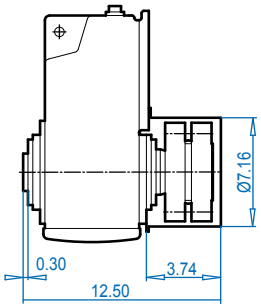


ALTERNATE SHAFTS SEE PAGES 388 - 393

## SK 5282V

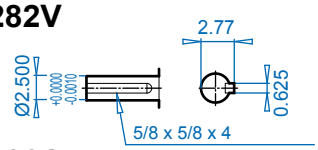


## SK 5282A

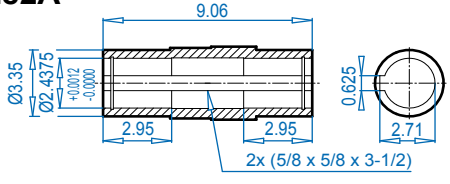


## SK 5282AB ⇨📖 394

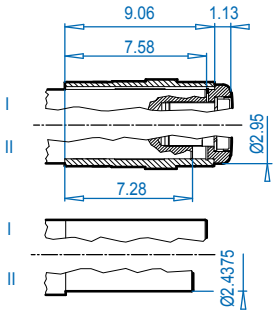


## SK 5282AS ⇨📖 391

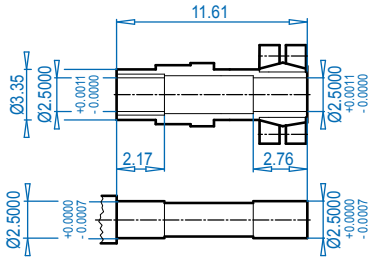


### NEMA Dimensions

| Type | AJ1 | AK1 | BB1 | BD1 | BF1 | U1 | V1 | UY1 | Y1 | C | C1 | CC |
|---|---|---|---|---|---|---|---|---|---|---|---|---|
| 56C | 5.88 | 4.500 | 0.18 | 6.54 | 0.43 | 0.625 | 2.06 | 0.71 | 0.188 | 17.29 | 12.29 | 4.30 |
| 140TC | 5.88 | 4.500 | 0.18 | 6.54 | 0.43 | 0.875 | 2.12 | 0.96 | 0.188 | 17.29 | 12.29 | 4.30 |
| 180TC | 7.25 | 8.500 | 0.23 | 9.17 | 0.59 | 1.125 | 2.62 | 1.24 | 0.250 | 20.89 | 15.89 | 7.90 |
| 210TC | 7.25 | 8.500 | 0.39 | 9.17 | 0.59 | 1.375 | 3.12 | 1.52 | 0.312 | 20.89 | 15.89 | 7.90 |
| 250TC | 7.25 | 8.500 | 0.23 | 9.17 | 0.59 | 1.625 | 3.75 | 1.80 | 0.375 | 20.89 | 15.89 | 7.90 |
| 280TC | 9.00 | 10.500 | 0.23 | 13.78 | 0.59 | 1.875 | 4.38 | 2.03 | 0.500 | 21.53 | 16.53 | 8.54 |


Send Quote Requests to info@automatedpt.com
Call +1(800)985-6929 To Order or Order Online At Nordgearmotors.com

# SK 5382 + Motor





DRIVESYSTEMS



## SK 5382V

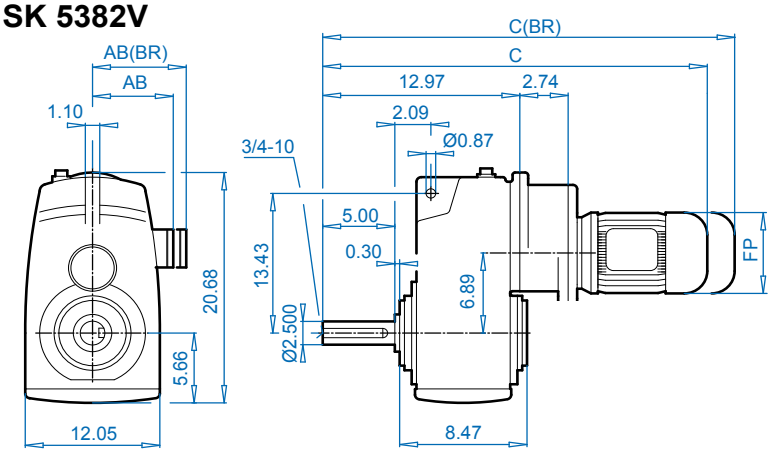


## SK 5382A

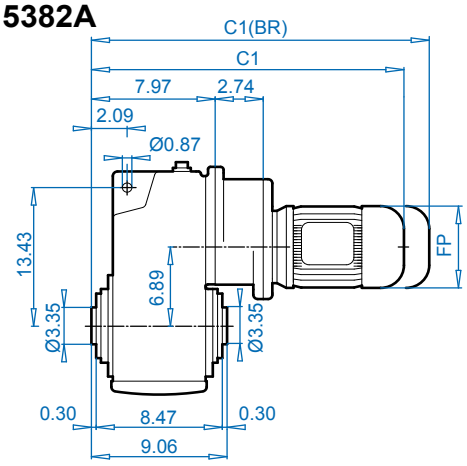


## SK 5382VF

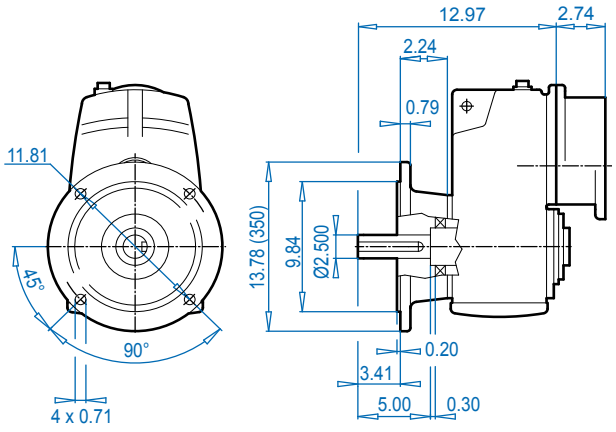


## SK 5382AF

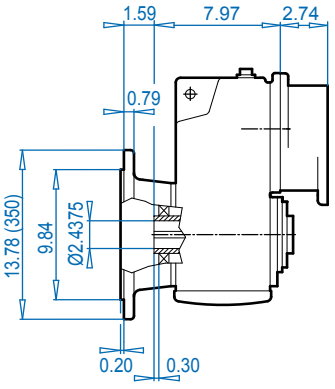


ALTERNATE SHAFTS SEE PAGES 388 - 393

## SK 5382V

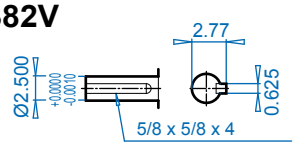


## SK 5382A

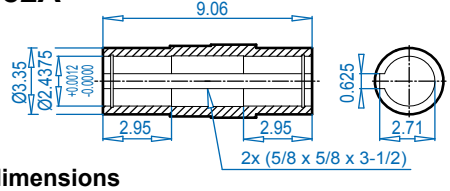


## SK 5382**AB** ⇨📖 394

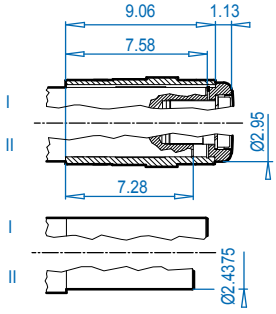


### Motor dimensions

| Standard efficiency | 80S/L | 90S/L | 100L | | 132S/M | For Other Connection Possibilities please see ⇨📖 376 & 378 |
|---|---|---|---|---|---|---|
| Energy efficiency | 80LH | 90SH/LH | 100LH | 112MH | 132SH/MH | |
| AB | 5.59 | 5.79 | 6.65 | 7.05 | 8.03 |  |
| AB (BR) | 5.63 | 5.83 | 6.26 | 6.69 | 7.72 | |
| C1 | 20.75 | 22.36 | 23.54 | 24.45 | 27.84 | |
| C1 (BR) | 23.27 | 25.32 | 27.13 | 28.11 | 32.05 | |
| C | 25.75 | 27.36 | 28.54 | 29.45 | 32.84 | |
| C (BR) | 28.27 | 30.32 | 32.13 | 33.11 | 37.05 | |
| FP | 6.14 | 6.92 | 7.63 | 8.58 | 10.16 | |

**(BR)** denotes Brakemotor


Send Quote Requests to info@automatedpt.com
Call +1(800)985-6929 To Order or Order Online At Nordgearmotors.com

DRIVESYSTEMS





# SK 5382 + NEMA

## SK 5382V

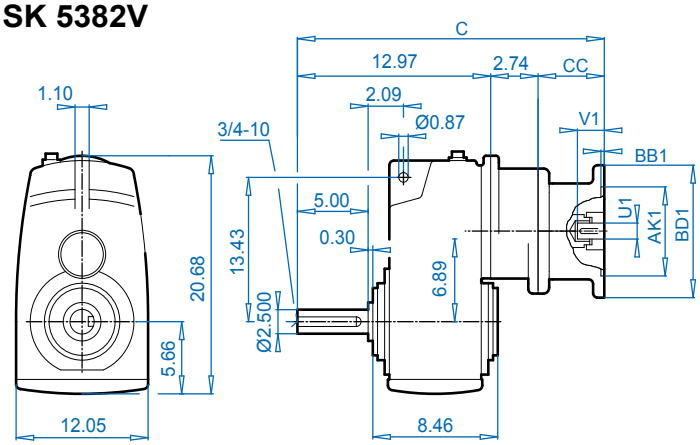


## SK 5382A

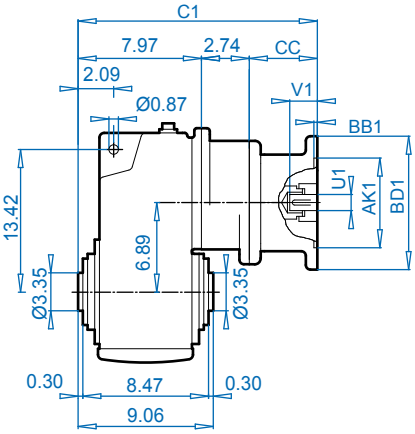


## NEMA Input

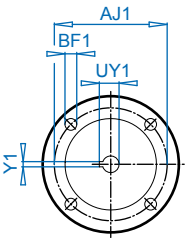


Dimensions in Inches
DIMENSIONS

## SK 5382VF

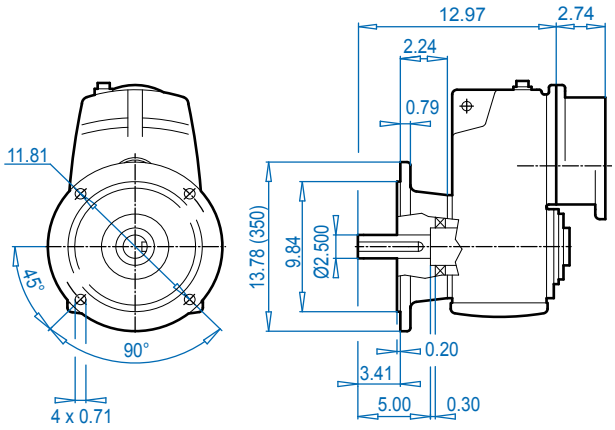


## SK 5382AF

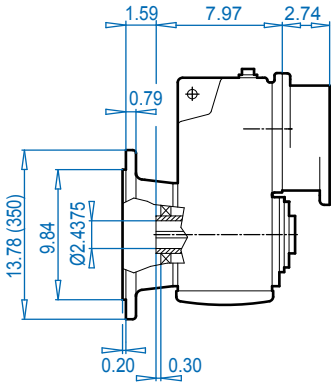


## SK 5382V

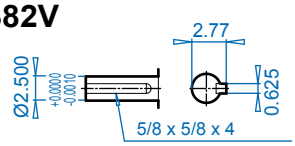


## SK 5382A

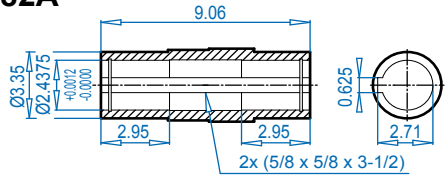


## SK 5382AB ⇨🕮 394

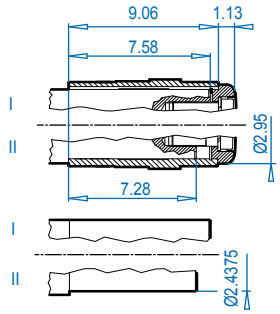


ALTERNATE SHAFTS SEE PAGES 388 - 393

### NEMA Dimensions

| Type | AJ1 | AK1 | BB1 | BD1 | BF1 | U1 | V1 | UY1 | Y1 | C | C1 | CC |
|---|---|---|---|---|---|---|---|---|---|---|---|---|
| 56C | 5.88 | 4.500 | 0.18 | 6.54 | 0.43 | 0.625 | 2.06 | 0.71 | 0.188 | 20.31 | 15.31 | 4.60 |
| 140TC | 5.88 | 4.500 | 0.18 | 6.54 | 0.43 | 0.875 | 2.12 | 0.96 | 0.188 | 20.31 | 15.31 | 4.60 |
| 180TC | 7.25 | 8.500 | 0.23 | 9.17 | 0.59 | 1.125 | 2.62 | 1.24 | 0.250 | 22.31 | 17.31 | 6.60 |
| 210TC | 7.25 | 8.500 | 0.39 | 9.17 | 0.59 | 1.375 | 3.12 | 1.52 | 0.312 | 22.31 | 17.31 | 6.60 |


Send Quote Requests to info@automatedpt.com
Call +1(800)985-6929 To Order or Order Online At Nordgearmotors.com

# SK 6282 + Motor



DRIVESYSTEMS

DIMENSIONS

Dimensions in Inches

## SK 6282V

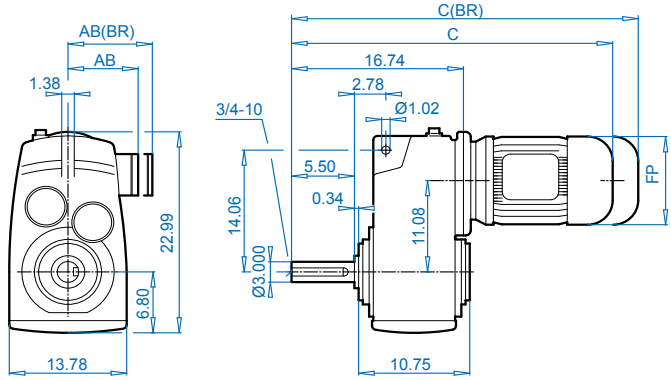


## SK 6282A

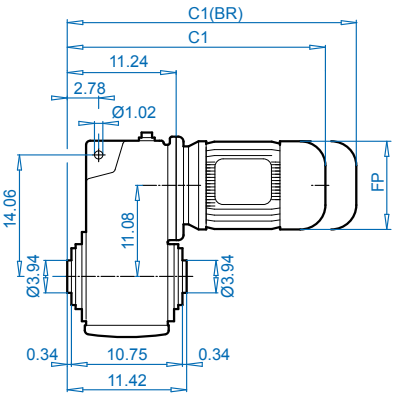


## SK 6282VF

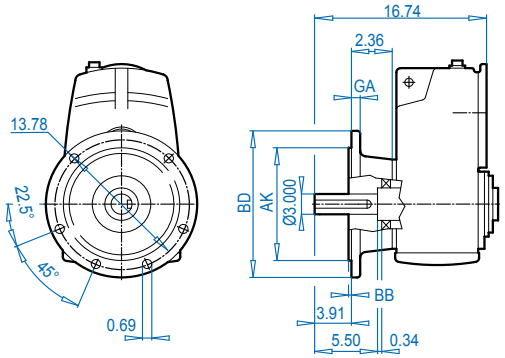


## SK 6282AF

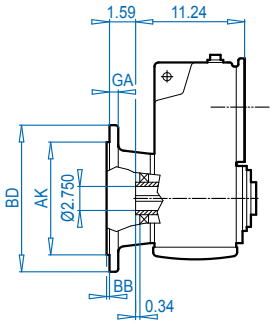


## SK 6282ASH

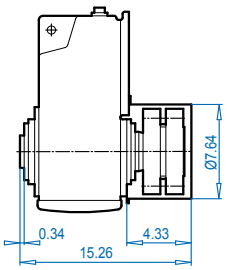


## SK 6282V

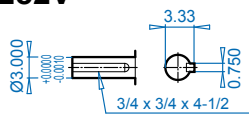


## SK 6282A

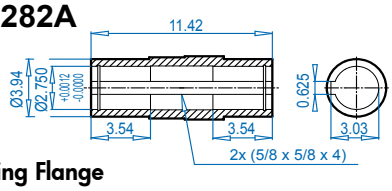


## SK 6282**AB** ⇨🕮 394

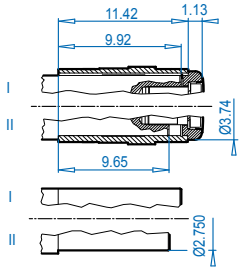


## SK 6282**AS** ⇨🕮 391

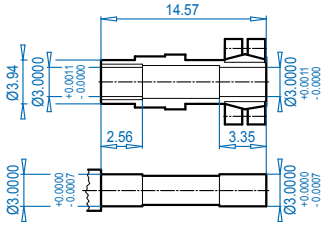


### Mounting Flange

| BD (mm) | AJ | AK | BB | BF | GA |
|---|---|---|---|---|---|
| 15.75 (400) | 13.78 | 11.81 +0.0000 -0.0013 | 0.20 | 0.69 | 0.79 |
| 17.72 (450) | 15.75 | 13.78 +0.0000 -0.0014 | 0.20 | 0.69 | 0.87 |

### Motor dimensions

| Standard eff. | 100L | | 132S/M | 160M/L | | 180MX/LX | | 200L | 225S/M | | | For Other Connection Possibilities please see ⇨🕮 376 & 378 |
|---|---|---|---|---|---|---|---|---|---|---|---|---|
| Energy eff. | 100LH | 112MH | 132SH/MH | 160MH | 160LH | | 180MH/LH | 200LH | | 225SH | 225MH | |
| AB | 6.65 | 7.05 | 8.03 | 8.90 | 8.90 | 8.90 | 10.20 | 12.05 | 12.05 | 12.80 | 12.80 |  |
| AB (BR) | 6.26 | 6.69 | 7.72 | 8.90 | 8.90 | 8.90 | 10.20 | 12.05 | 12.05 | - | - | |
| C1 | 23.35 | 24.13 | 28.43 | 30.12 | 31.69 | 31.69 | 35.00 | 38.39 | 38.39 | 38.27 | 38.27 | |
| C1 (BR) | 26.93 | 27.79 | 32.64 | 36.69 | 38.43 | 38.43 | 39.13 | 44.96 | 44.96 | - | - | |
| C | 28.85 | 29.63 | 33.93 | 35.62 | 37.19 | 37.19 | 40.50 | 43.89 | 43.89 | 43.77 | 43.77 | |
| C (BR) | 32.43 | 33.29 | 38.14 | 42.19 | 43.93 | 43.93 | 44.63 | 50.46 | 50.46 | - | - | |
| FP | 7.63 | 8.58 | 10.16 | 12.60 | 12.60 | 12.60 | 14.09 | 15.67 | 15.67 | 17.52 | 17.52 | |

**(BR)** denotes Brakemotor

ALTERNATE SHAFTS SEE PAGES 388 - 393


Send Quote Requests to info@automatedpt.com
Call +1(800)985-6929 To Order or Order Online At Nordgearmotors.com

DRIVESYSTEMS





# SK 6282 + NEMA

## SK 6282V

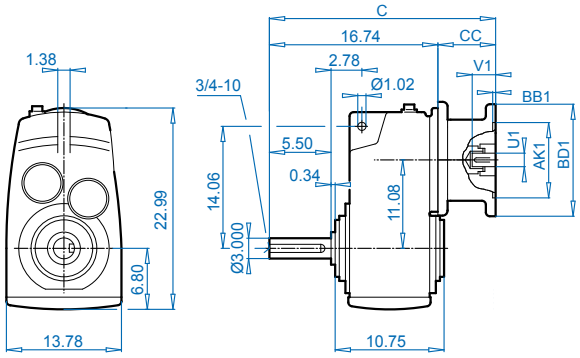


## SK 6282A

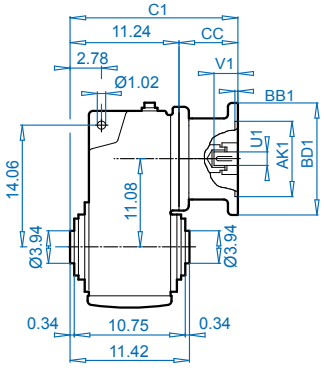


## NEMA Input

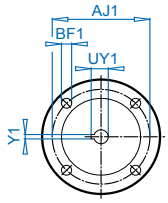


Dimensions in Inches
DIMENSIONS

## SK 6282VF

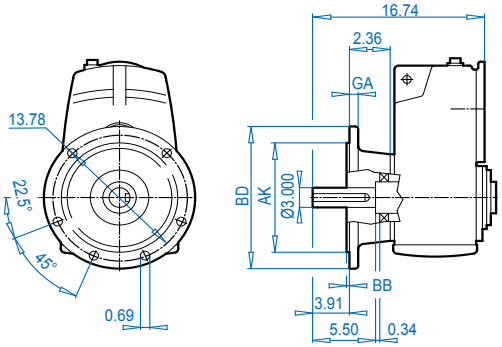


## SK 6282AF

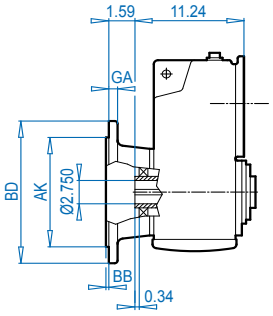


## SK 6282ASH

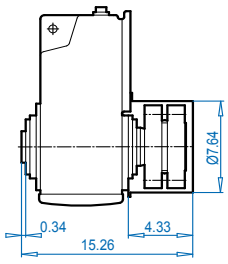


## SK 6282V

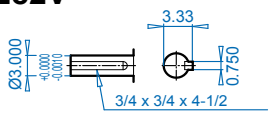


## SK 6282A

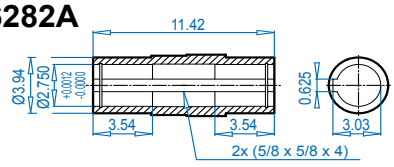


## SK 6282AB ⇨🕮 394

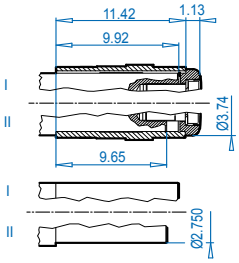


## SK 6282AS ⇨🕮 391

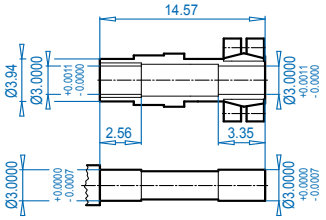


ALTERNATE SHAFTS SEE PAGES 388 - 393

### Mounting Flange

| BD (mm) | AJ | AK | BB | BF | GA |
|---|---|---|---|---|---|
| 15.75 (400) | 13.78 | 11.81 +0.0000 -0.0013 | 0.20 | 0.69 | 0.79 |
| 17.72 (450) | 15.75 | 13.78 +0.0000 -0.0014 | 0.20 | 0.69 | 0.87 |

### NEMA Dimensions

| Type | AJ1 | AK1 | BB1 | BD1 | BF1 | U1 | V1 | UY1 | Y1 | C | C1 | CC |
|---|---|---|---|---|---|---|---|---|---|---|---|---|
| 180TC | 7.25 | 8.500 | 0.23 | 9.17 | 0.59 | 1.125 | 2.62 | 1.24 | 0.250 | 24.30 | 18.80 | 7.50 |
| 210TC | 7.25 | 8.500 | 0.39 | 9.17 | 0.59 | 1.375 | 3.12 | 1.52 | 0.312 | 24.30 | 18.80 | 7.50 |
| 250TC | 7.25 | 8.500 | 0.23 | 9.17 | 0.59 | 1.625 | 3.75 | 1.80 | 0.375 | 28.18 | 22.68 | 11.38 |
| 280TC | 9.00 | 10.500 | 0.23 | 13.78 | 0.55 | 1.875 | 4.38 | 2.10 | 0.500 | 28.18 | 22.68 | 11.38 |
| 320TC | 11.00 | 12.500 | 0.23 | 13.78 | 0.71 | 2.125 | 5.00 | 2.35 | 0.500 | 27.15 | 21.65 | 10.35 |
| 360TC | 11.00 | 12.500 | 0.16 | 17.72 | 0.71 | 2.375 | 5.62 | 2.65 | 0.625 | 30.07 | 24.57 | 13.27 |


Send Quote Requests to info@automatedpt.com
Call +1(800)985-6929 To Order or Order Online At Nordgearmotors.com

# SK 6382 + Motor




DRIVESYSTEMS

DIMENSIONS — Dimensions in Inches

## SK 6382V

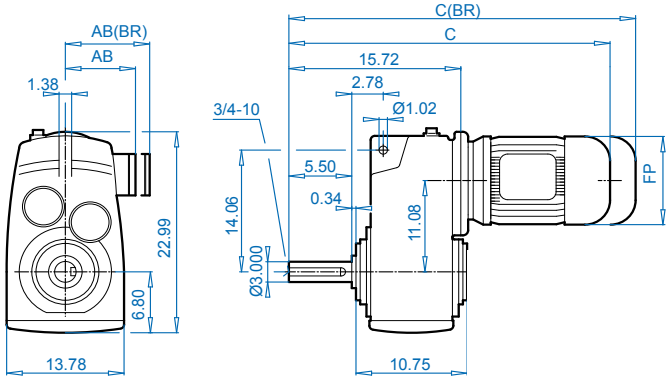


## SK 6382A

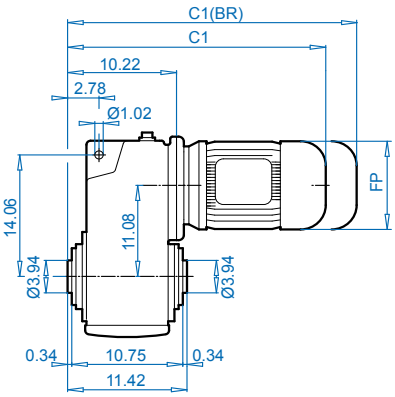


## SK 6382VF

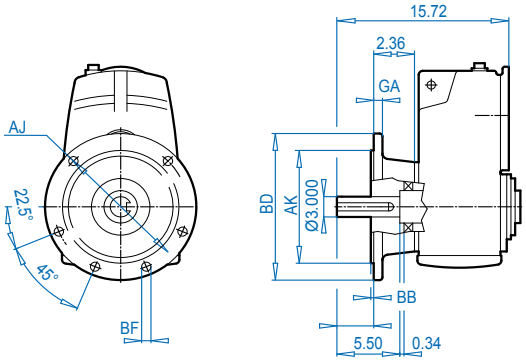


## SK 6382AF

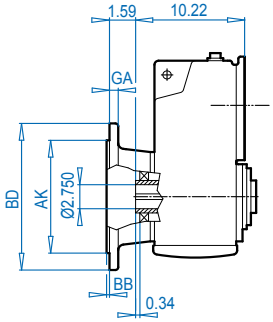


## SK 6382ASH

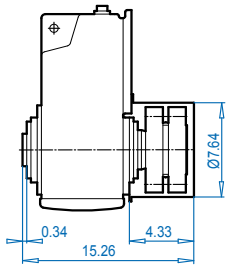


## SK 6382V

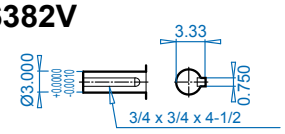


## SK 6382A

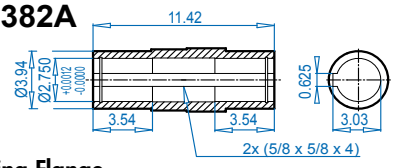


## SK 6382AB ⇨📖 394

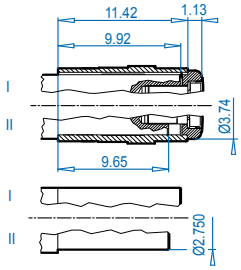


## SK 6382AS ⇨📖 391

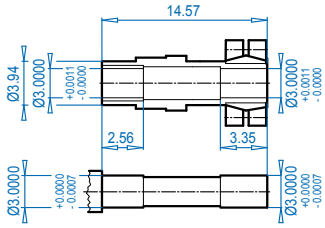


ALTERNATE SHAFTS SEE PAGES 388 - 393

### Mounting Flange

| BD (mm) | AJ | AK | BB | BF | GA |
|---|---|---|---|---|---|
| 15.75 (400) | 13.78 | 11.81 +0.0000 -0.0013 | 0.20 | 0.69 | 0.79 |
| 17.72 (450) | 15.75 | 13.78 +0.0000 -0.0014 | 0.20 | 0.69 | 0.87 |

### Motor dimensions

| Standard eff. | 90S/L | 100L | | 132S/M | 160M/L | | 180MX/LX | | For Other Connection Possibilities please see ⇨📖 376 & 378 |
|---|---|---|---|---|---|---|---|---|---|
| Energy eff. | 90SH/LH | 100LH | 112MH | 132SH/MH | 160MH | 160LH | | 180MH/LH | |
| AB | 5.79 | 6.65 | 7.05 | 8.03 | 8.90 | 8.90 | 8.90 | 10.20 |  |
| AB (BR) | 5.83 | 6.26 | 6.69 | 7.72 | 8.90 | 8.90 | 8.90 | 10.20 | |
| C1 | 21.15 | 22.33 | 23.23 | 26.62 | 29.10 | 30.67 | 30.67 | 34.77 | |
| C1 (BR) | 24.10 | 25.91 | 26.89 | 30.83 | 35.67 | 37.41 | 37.41 | 38.90 | |
| C | 26.65 | 27.83 | 28.73 | 32.12 | 34.60 | 36.17 | 36.17 | 40.27 | |
| C (BR) | 29.60 | 31.41 | 32.39 | 36.33 | 41.17 | 42.91 | 42.91 | 44.40 | |
| FP | 6.92 | 7.63 | 8.58 | 10.16 | 12.60 | 12.60 | 12.60 | 14.09 | |

**(BR)** denotes Brakemotor


Send Quote Requests to info@automatedpt.com
Call +1(800)985-6929 To Order or Order Online At Nordgearmotors.com

DRIVESYSTEMS





# SK 6382 + NEMA

## SK 6382V

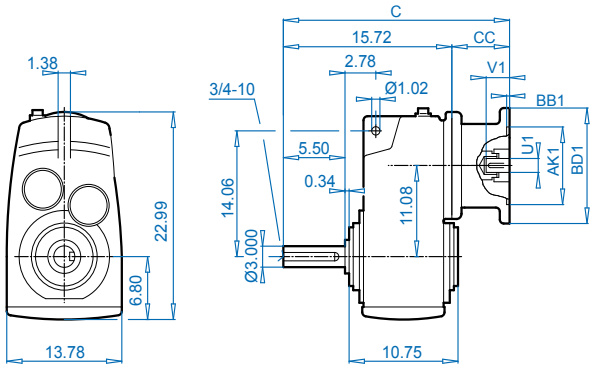


## SK 6382A

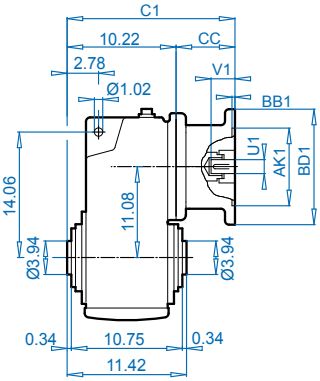


## NEMA Input

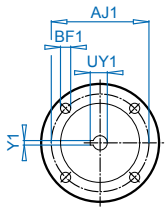


DIMENSIONS

Dimensions in Inches

## SK 6382VF

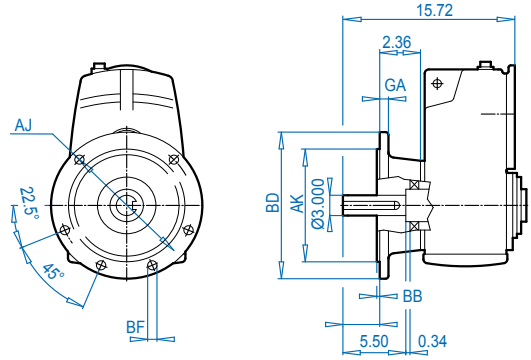


## SK 6382AF

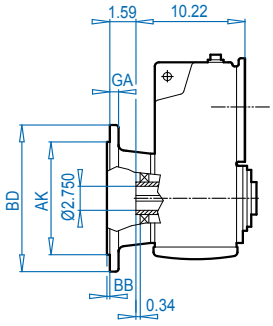


## SK 6382ASH

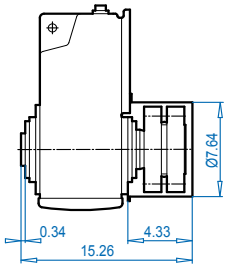


## SK 6382V

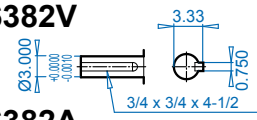


## SK 6382A

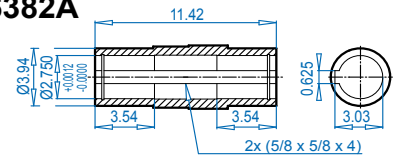


## SK 6382AB ⇨🕮 394

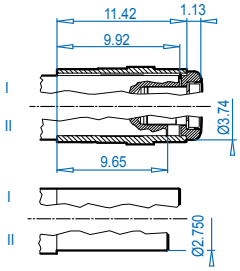


## SK 6382AS ⇨🕮 391

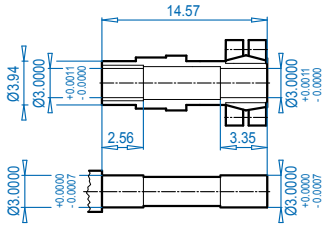


ALTERNATE SHAFTS SEE PAGES 388 - 393

### Mounting Flange

| BD (mm) | AJ | AK | BB | BF | GA |
|---|---|---|---|---|---|
| 15.75 (400) | 13.78 | 11.81 +0.0000 -0.0013 | 0.20 | 0.69 | 0.79 |
| 17.72 (450) | 15.75 | 13.78 +0.0000 -0.0014 | 0.20 | 0.69 | 0.87 |

### NEMA Dimensions

| Type | AJ1 | AK1 | BB1 | BD1 | BF1 | U1 | V1 | UY1 | Y1 | C | C1 | CC |
|---|---|---|---|---|---|---|---|---|---|---|---|---|
| **56C** | 5.88 | 4.500 | 0.18 | 6.54 | 0.43 | 0.625 | 2.06 | 0.71 | 0.188 | 20.08 | 14.58 | 4.30 |
| **140TC** | 5.88 | 4.500 | 0.18 | 6.54 | 0.43 | 0.875 | 2.12 | 0.96 | 0.188 | 20.08 | 14.58 | 4.30 |
| **180TC** | 7.25 | 8.500 | 0.23 | 9.17 | 0.59 | 1.125 | 2.62 | 1.24 | 0.250 | 23.68 | 18.18 | 7.90 |
| **210TC** | 7.25 | 8.500 | 0.23 | 9.17 | 0.59 | 1.375 | 3.12 | 1.52 | 0.312 | 23.68 | 18.18 | 7.90 |
| **250TC** | 7.25 | 8.500 | 0.23 | 9.17 | 0.59 | 1.625 | 3.75 | 1.80 | 0.375 | 23.68 | 18.18 | 7.90 |
| **280TC** | 9.00 | 10.500 | 0.23 | 13.78 | 0.55 | 1.875 | 4.38 | 2.10 | 0.500 | 24.32 | 18.82 | 8.54 |


Send Quote Requests to info@automatedpt.com
Call +1(800)985-6929 To Order or Order Online At Nordgearmotors.com

# SK 7282 + Motor




DRIVESYSTEMS

DIMENSIONS — Dimensions in Inches

## SK 7282V

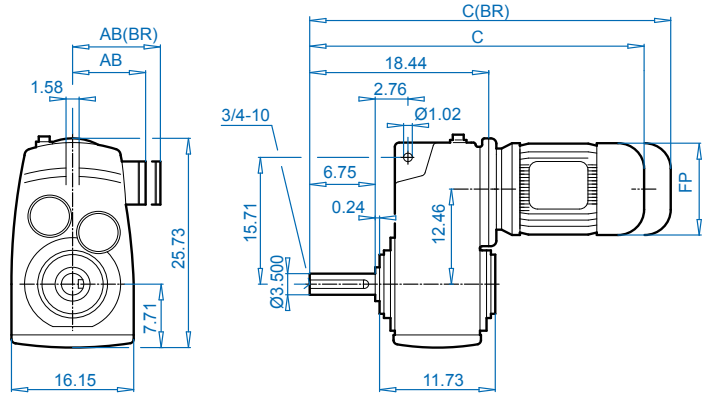


## SK 7282A

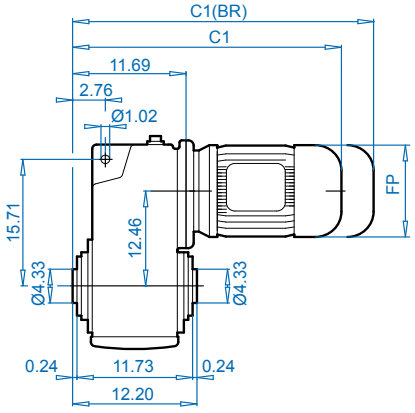


## SK 7282VF

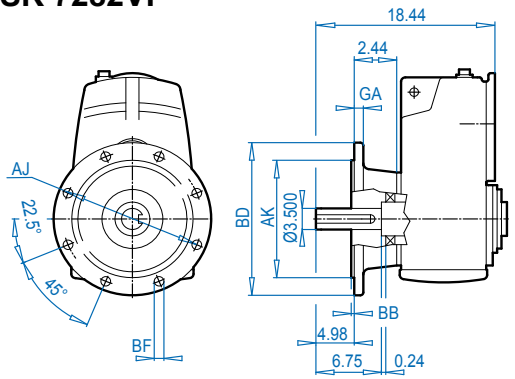


## SK 7282AF

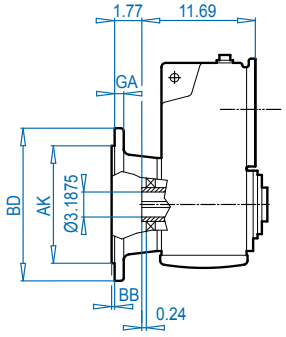


## SK 7282ASH

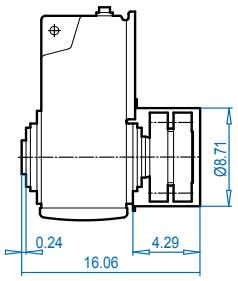


## SK 7282V

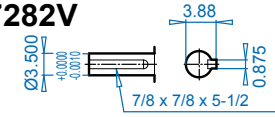


## SK 7282A

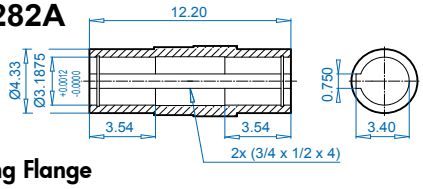


## SK 7282AB ⇨📖 394

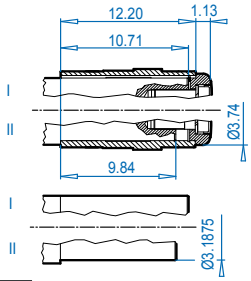


## SK 7282AS ⇨📖 391

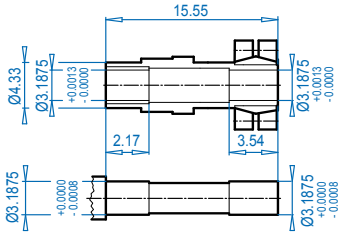


ALTERNATE SHAFTS SEE PAGES 388 - 393

### Mounting Flange

| BD (mm) | AJ | AK | BB | BF | GA |
|---|---|---|---|---|---|
| 17.72 (450) | 15.75 | 13.78 +0.0000 -0.0014 | 0.20 | 0.71 | 0.87 |
| 21.65 (550) | 19.69 | 17.72 +0.0000 -0.0016 | 0.20 | 0.71 | 1.10 |

### Motor dimensions

| Standard eff. | 132S/M | 160M/L | | 180MX/LX | | 200L | 225S/M | | | For Other Connection Possibilities please see ⇨📖 377 & 379 |
|---|---|---|---|---|---|---|---|---|---|---|
| Energy eff. | 132SH/MH | 160MH | 160LH | | 180MH/LH | 200LH | | 225SH | 225MH | |
| AB | 8.03 | 8.90 | 8.90 | 8.90 | 10.20 | 12.05 | 12.05 | 12.80 | 12.80 |  |
| AB (BR) | 7.72 | 8.90 | 8.90 | 8.90 | 10.20 | 12.05 | 12.05 | - | - | |
| C1 | 28.86 | 30.55 | 32.12 | 32.12 | 35.43 | 38.82 | 38.82 | 38.70 | 38.70 | |
| C1 (BR) | 33.07 | 37.12 | 38.86 | 38.86 | 39.56 | 45.39 | 45.39 | - | - | |
| C | 35.61 | 37.30 | 38.87 | 38.87 | 42.18 | 45.57 | 45.57 | 45.45 | 45.45 | |
| C (BR) | 39.82 | 43.87 | 45.61 | 45.61 | 46.31 | 52.14 | 52.14 | - | - | |
| FP | 10.16 | 12.60 | 12.60 | 12.60 | 14.09 | 15.67 | 15.67 | 17.52 | 17.52 | |

**(BR)** denotes Brakemotor


Send Quote Requests to info@automatedpt.com
Call +1(800)985-6929 To Order or Order Online At Nordgearmotors.com

DRIVESYSTEMS





# SK 7282 + NEMA

## SK 7282V

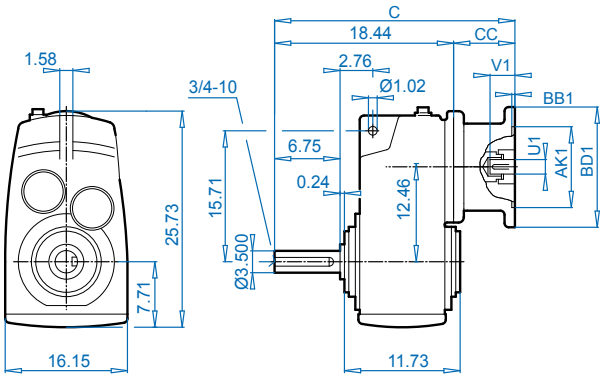


## SK 7282A

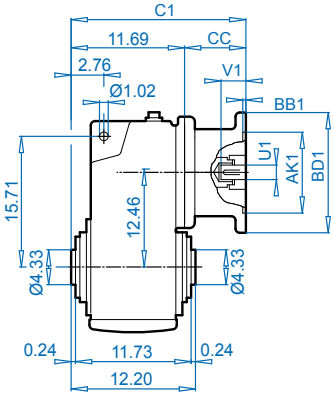


## NEMA Input

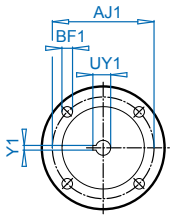


Dimensions in Inches
DIMENSIONS

## SK 7282VF

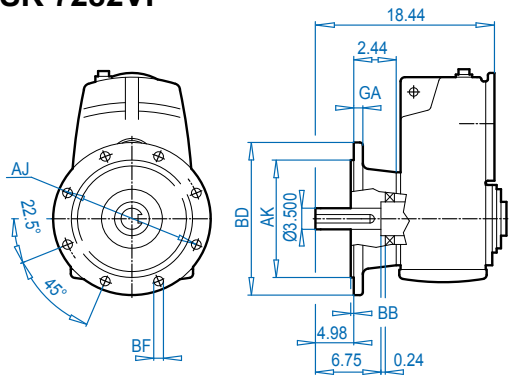


## SK 7282AF

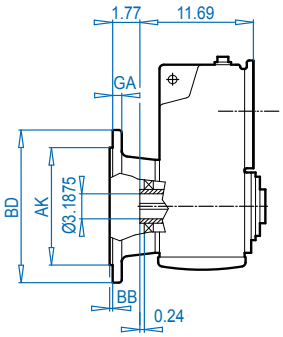


## SK 7282ASH

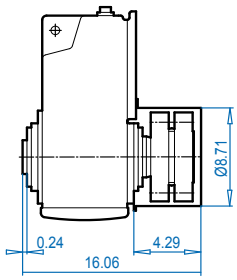


## SK 7282V

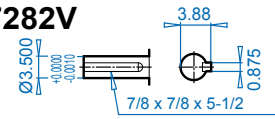


## SK 7282A

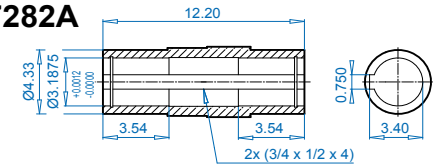


## SK 7282AB ⇨ 394

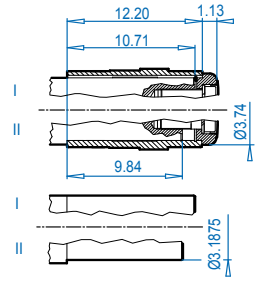


## SK 7282AS ⇨ 391

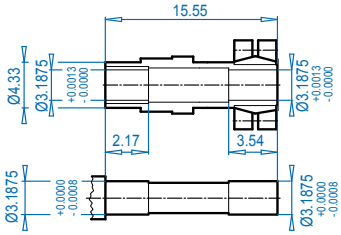


ALTERNATE SHAFTS SEE PAGES 388 - 393

### Mounting Flange

| BD (mm) | AJ | AK | BB | BF | GA |
|---|---|---|---|---|---|
| 17.72 (450) | 15.75 | 13.78 +0.0000 -0.0014 | 0.20 | 0.71 | 0.87 |
| 21.65 (550) | 19.69 | 17.72 +0.0000 -0.0016 | 0.20 | 0.71 | 1.10 |

### NEMA Dimensions

| Type | AJ1 | AK1 | BB1 | BD1 | BF1 | U1 | V1 | UY1 | Y1 | C | C1 | CC |
|---|---|---|---|---|---|---|---|---|---|---|---|---|
| 180TC | 7.25 | 8.500 | 0.23 | 9.17 | 0.59 | 1.125 | 2.62 | 1.24 | 0.250 | 25.98 | 19.23 | 7.50 |
| 210TC | 7.25 | 8.500 | 0.39 | 9.17 | 0.59 | 1.375 | 3.12 | 1.52 | 0.312 | 25.98 | 19.23 | 7.50 |
| 250TC | 7.25 | 8.500 | 0.23 | 9.17 | 0.59 | 1.625 | 3.75 | 1.80 | 0.375 | 29.86 | 23.11 | 11.38 |
| 280TC | 9.00 | 10.500 | 0.23 | 13.78 | 0.59 | 1.875 | 4.38 | 2.03 | 0.500 | 29.86 | 23.11 | 11.38 |
| 320TC | 11.00 | 12.500 | 0.23 | 13.78 | 0.71 | 2.125 | 5.00 | 2.35 | 0.500 | 28.83 | 22.08 | 10.35 |
| 360TC | 11.00 | 12.500 | 0.16 | 17.72 | 0.71 | 2.375 | 5.62 | 2.65 | 0.625 | 31.75 | 25.00 | 13.27 |


Send Quote Requests to info@automatedpt.com
Call +1(800)985-6929 To Order or Order Online At Nordgearmotors.com

# SK 7382 + Motor



DRIVESYSTEMS



## SK 7382V

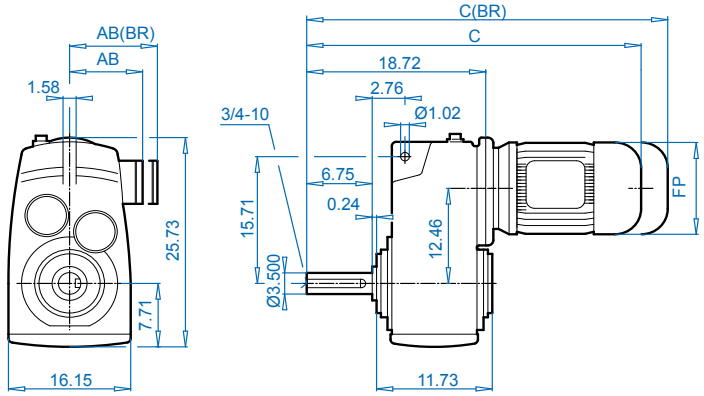


## SK 7382A

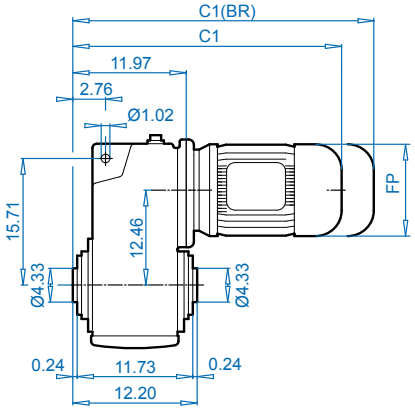


## SK 7382VF

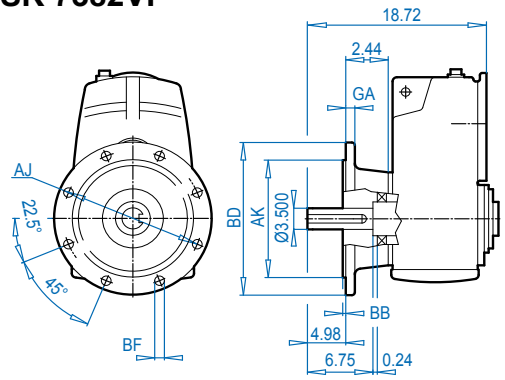


## SK 7382AF

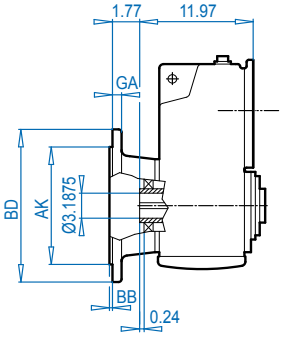


## SK 7382ASH

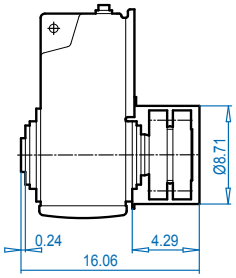


## SK 7382V

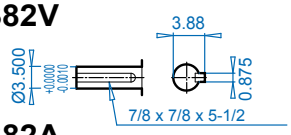


## SK 7382A

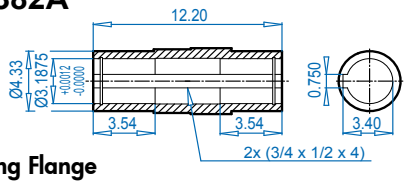


## SK 7382AB ⇨📖 394

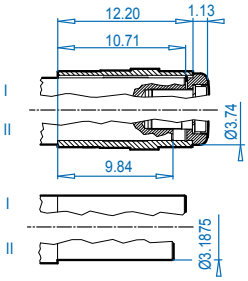


## SK 7382AS ⇨📖 391

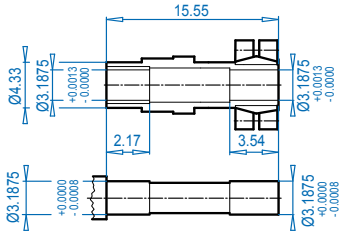


### Mounting Flange

| BD (mm) | AJ | AK | BB | BF | GA |
|---|---|---|---|---|---|
| 17.72 (450) | 15.75 | 13.78 +0.0000 -0.0014 | 0.20 | 0.71 | 0.87 |
| 21.65 (550) | 19.69 | 17.72 +0.0000 -0.0016 | 0.20 | 0.71 | 1.10 |

### Motor dimensions

| Standard eff. | 100L | | 132S/M | 160M/L | | 180MX/LX | | 200L | 225S/M | | | For Other Connection Possibilities please see ⇨📖 377 & 379 |
|---|---|---|---|---|---|---|---|---|---|---|---|---|
| Energy eff. | 100LH | 112MH | 132SH/MH | 160MH | 160LH | | 180MH/LH | 200LH | | 225SH | 225MH | |
| AB | 6.65 | 7.05 | 8.03 | 8.90 | 8.90 | 8.90 | 10.20 | 12.05 | 12.05 | 12.80 | 12.80 |  |
| AB (BR) | 6.26 | 6.69 | 7.72 | 8.90 | 8.90 | 8.90 | 10.20 | 12.05 | 12.05 | - | - | |
| C1 | 24.06 | 24.84 | 29.14 | 30.83 | 32.40 | 32.40 | 35.71 | 39.10 | 39.10 | 38.98 | 38.98 | |
| C1 (BR) | 27.64 | 28.50 | 33.35 | 37.40 | 39.14 | 39.14 | 39.84 | 45.67 | 45.67 | - | - | |
| C | 28.85 | 29.63 | 33.93 | 35.62 | 37.19 | 37.19 | 40.50 | 43.89 | 43.89 | 43.77 | 43.77 | |
| C (BR) | 30.81 | 31.59 | 35.89 | 37.58 | 39.15 | 39.15 | 42.46 | 45.85 | 45.85 | 45.73 | 45.73 | |
| FP | 7.63 | 8.58 | 10.16 | 12.60 | 12.60 | 12.60 | 14.09 | 15.67 | 15.67 | 17.52 | 17.52 | |

**(BR)** denotes Brakemotor

ALTERNATE SHAFTS SEE PAGES 388 - 393


Send Quote Requests to info@automatedpt.com
Call +1(800)985-6929 To Order or Order Online At Nordgearmotors.com

DRIVESYSTEMS





# SK 7382 + NEMA

## SK 7382V

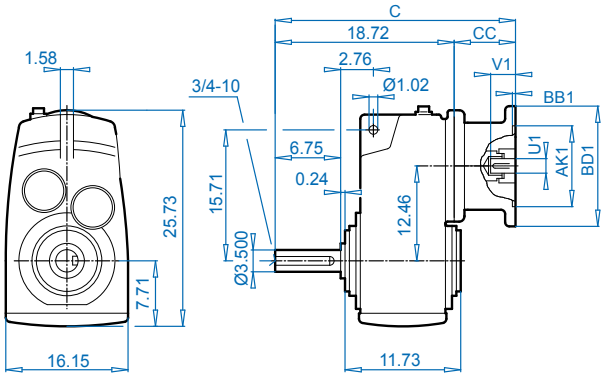


## SK 7382A

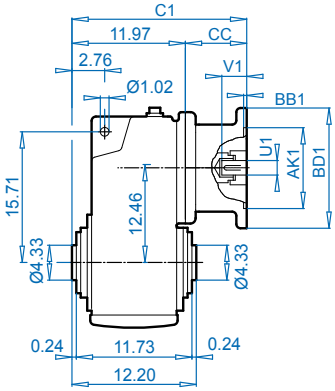


## NEMA Input

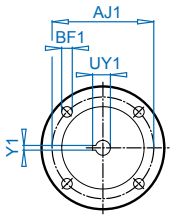


Dimensions in Inches
DIMENSIONS

## SK 7382VF

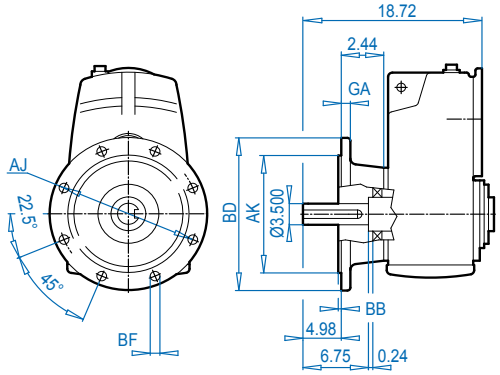


## SK 7382AF

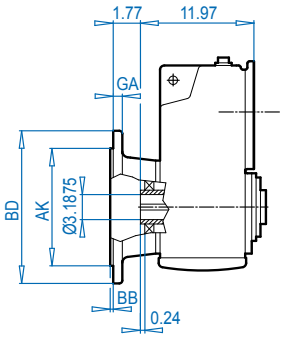


## SK 7382ASH

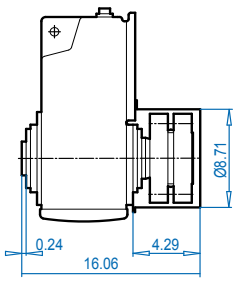


## SK 7382V

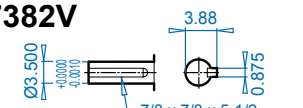


## SK 7382A

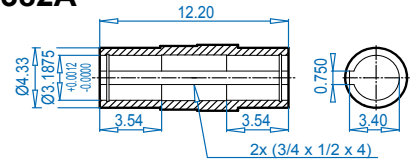


## SK 7382AB ⇨🕮 394

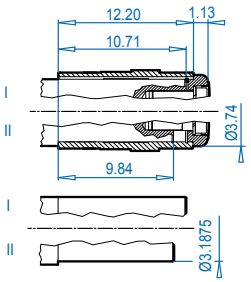


## SK 7382AS ⇨🕮 391

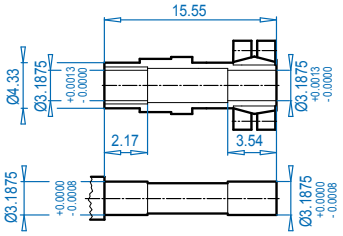


### Mounting Flange

| BD (mm) | AJ | AK | BB | BF | GA |
|---|---|---|---|---|---|
| 17.72 (450) | 15.75 | 13.78 +0.0000 -0.0014 | 0.20 | 0.71 | 0.87 |
| 21.65 (550) | 19.69 | 17.72 +0.0000 -0.0016 | 0.20 | 0.71 | 1.10 |

### NEMA Dimensions

| Type | AJ1 | AK1 | BB1 | BD1 | BF1 | U1 | V1 | UY1 | Y1 | C | C1 | CC |
|---|---|---|---|---|---|---|---|---|---|---|---|---|
| 180TC | 7.25 | 8.500 | 0.23 | 9.17 | 0.59 | 1.125 | 2.62 | 1.24 | 0.250 | 26.26 | 19.51 | 7.50 |
| 210TC | 7.25 | 8.500 | 0.39 | 9.17 | 0.59 | 1.375 | 3.12 | 1.52 | 0.312 | 26.26 | 19.51 | 7.50 |
| 250TC | 7.25 | 8.500 | 0.23 | 9.17 | 0.59 | 1.625 | 3.75 | 1.80 | 0.375 | 30.14 | 23.39 | 11.38 |
| 280TC | 9.00 | 10.500 | 0.23 | 13.78 | 0.59 | 1.875 | 4.38 | 2.03 | 0.500 | 30.14 | 23.39 | 11.38 |
| 320TC | 11.00 | 12.500 | 0.23 | 13.78 | 0.71 | 2.125 | 5.00 | 2.35 | 0.500 | 29.11 | 22.36 | 10.35 |
| 360TC | 11.00 | 12.500 | 0.16 | 17.72 | 0.71 | 2.375 | 5.62 | 2.65 | 0.625 | 32.03 | 25.28 | 13.27 |

ALTERNATE SHAFTS SEE PAGES 388 - 393


Send Quote Requests to info@automatedpt.com
Call +1(800)985-6929 To Order or Order Online At Nordgearmotors.com

# SK 8282 + Motor





DRIVESYSTEMS



## SK 8282V

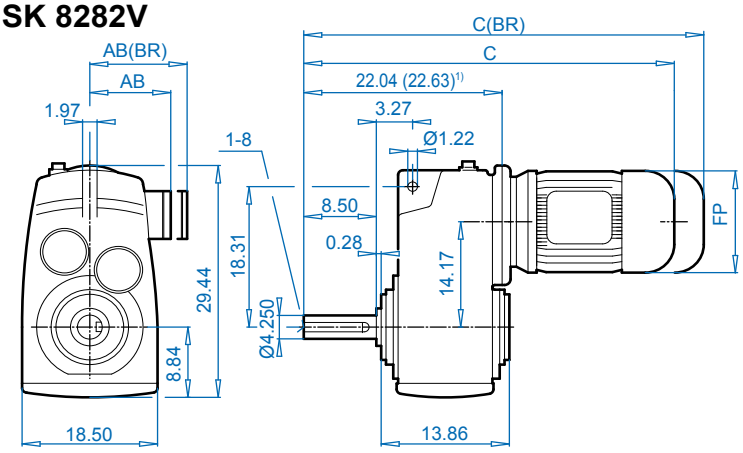


## SK 8282A

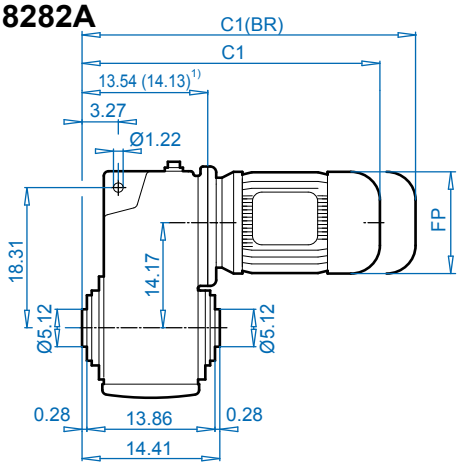


## SK 8282VF

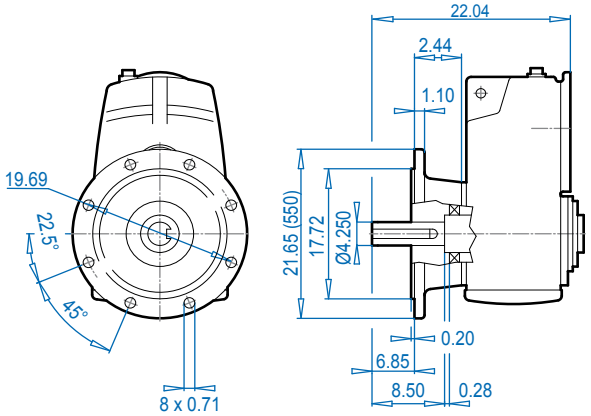


## SK 8282AF

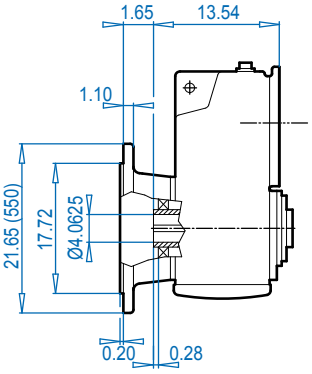


## SK 8282ASH

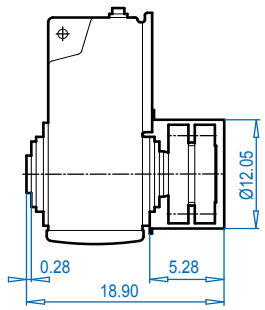


ALTERNATE SHAFTS SEE PAGES 388 - 393

## SK 8282V

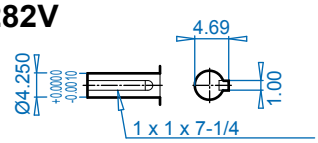


## SK 8282A

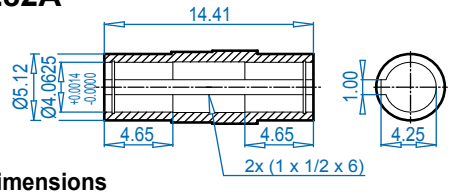


## SK 8282AB ⇨📖 394

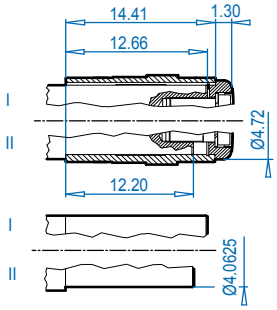


## SK 8282AS ⇨📖 391

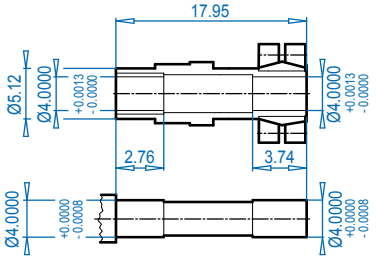


**Motor dimensions**

| Standard eff. | 132S/M | 160M/L | | 180MX/LX | | 200L | 225S/M | | | 250M1) | | 280S1) | For Other Connection Possibilities please see ⇨📖 377 & 379 |
|---|---|---|---|---|---|---|---|---|---|---|---|---|---|
| Energy eff. | 132SH/MH | 160MH | 160LH | | 180MH/LH | 200LH | | 225SH | 225MH | | 250MH1) | 280SH1) | |
| AB | 8.03 | 8.90 | 8.90 | 8.90 | 10.20 | 12.05 | 12.05 | 12.80 | 12.80 | 15.43 | 15.43 | 17.01 |  |
| AB (BR) | 7.72 | 8.90 | 8.90 | 8.90 | 10.20 | 12.05 | 12.05 | - | - | 15.43 | 15.43 | 17.01 | |
| C1 | 30.71 | 32.40 | 33.97 | 33.97 | 37.28 | 40.67 | 40.67 | 40.55 | 40.55 | 44.09 | 46.85 | 48.23 | |
| C1 (BR) | 34.92 | 38.97 | 40.71 | 40.71 | 41.41 | 47.24 | 47.24 | - | - | 52.36 | 55.11 | 59.45 | |
| C | 39.21 | 40.90 | 42.47 | 42.47 | 45.78 | 49.17 | 49.17 | 49.05 | 49.05 | 52.59 | 55.35 | 56.73 | |
| C (BR) | 43.42 | 47.47 | 49.21 | 49.21 | 49.91 | 55.74 | 55.74 | - | - | 60.85 | 63.62 | 67.95 | |
| FP | 10.16 | 12.60 | 12.60 | 12.60 | 14.09 | 15.67 | 15.67 | 17.52 | 17.52 | 19.49 | 19.49 | 22.64 | |

**(BR)** denotes Brakemotor


Send Quote Requests to info@automatedpt.com
Call +1(800)985-6929 To Order or Order Online At Nordgearmotors.com

DRIVESYSTEMS





# SK 8282 + NEMA

## SK 8282V

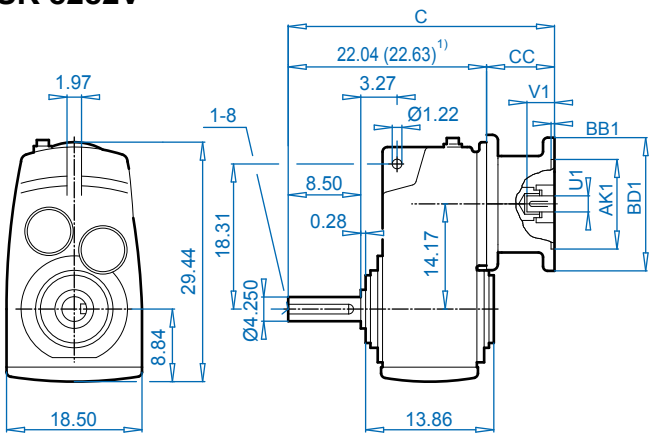


## SK 8282A

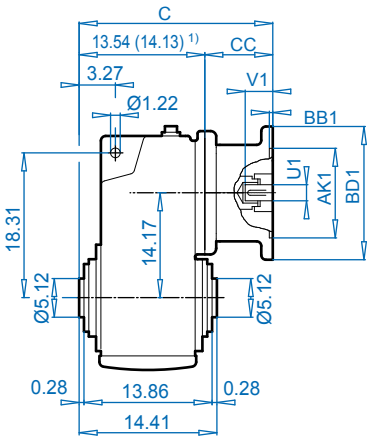


## NEMA Input

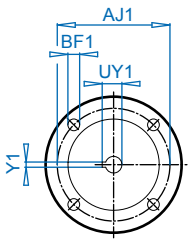




## SK 8282VF

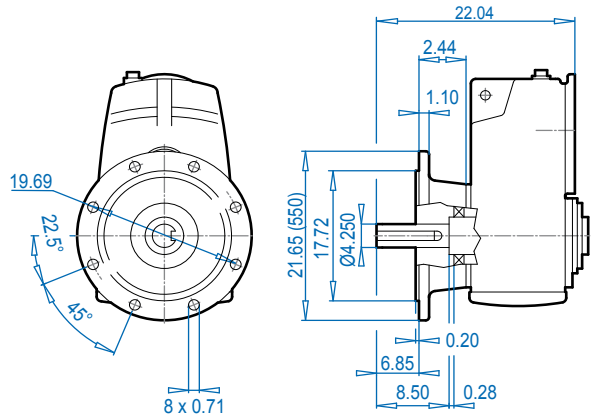


## SK 8282AF

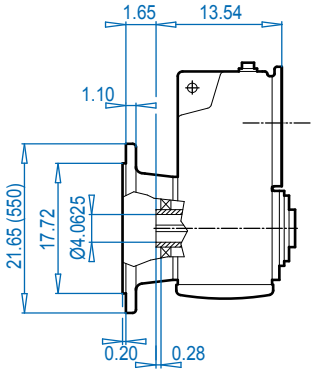


## SK 8282ASH

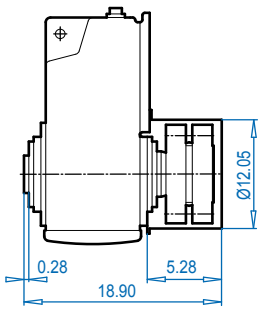


ALTERNATE SHAFTS SEE PAGES 388 - 393

## SK 8282V

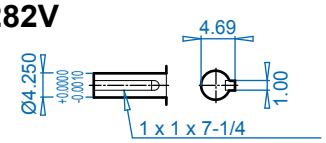


## SK 8282A

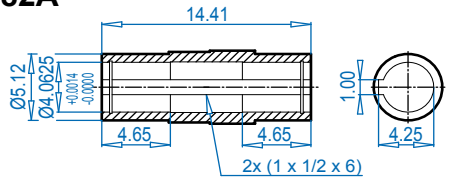


## SK 8282AB ⇨🕮 394

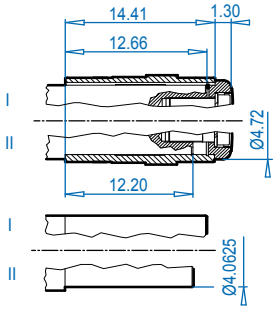


## SK 8282AS ⇨🕮 391

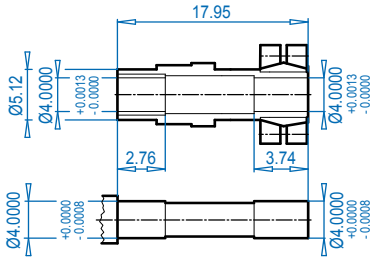


### NEMA Dimensions

| Type | AJ1 | AK1 | BB1 | BD1 | BF1 | U1 | V1 | UY1 | Y1 | C | C1 | CC |
|---|---|---|---|---|---|---|---|---|---|---|---|---|
| **180TC** | 7.25 | 8.500 | 0.23 | 9.17 | 0.59 | 1.125 | 2.62 | 1.24 | 0.250 | 29.58 | 21.08 | 7.50 |
| **210TC** | 7.25 | 8.500 | 0.39 | 9.17 | 0.59 | 1.375 | 3.12 | 1.52 | 0.312 | 29.58 | 21.08 | 7.50 |
| **250TC** | 7.25 | 8.500 | 0.23 | 9.17 | 0.59 | 1.625 | 3.75 | 1.80 | 0.375 | 33.46 | 24.96 | 11.38 |
| **280TC** | 9.00 | 10.500 | 0.23 | 13.78 | 0.59 | 1.875 | 4.38 | 2.03 | 0.500 | 33.46 | 24.96 | 11.38 |
| **320TC** | 11.00 | 12.500 | 0.23 | 13.78 | 0.71 | 2.125 | 5.00 | 2.35 | 0.500 | 32.43 | 23.93 | 10.35 |
| **360TC**[1)] | 11.00 | 12.500 | 0.16 | 21.65 | 0.71 | 2.375 | 5.62 | 2.65 | 0.625 | 35.35 | 26.85 | 13.27 |


Send Quote Requests to info@automatedpt.com
Call +1(800)985-6929 To Order or Order Online At Nordgearmotors.com

# SK 8382 + Motor





DRIVESYSTEMS



## SK 8382V

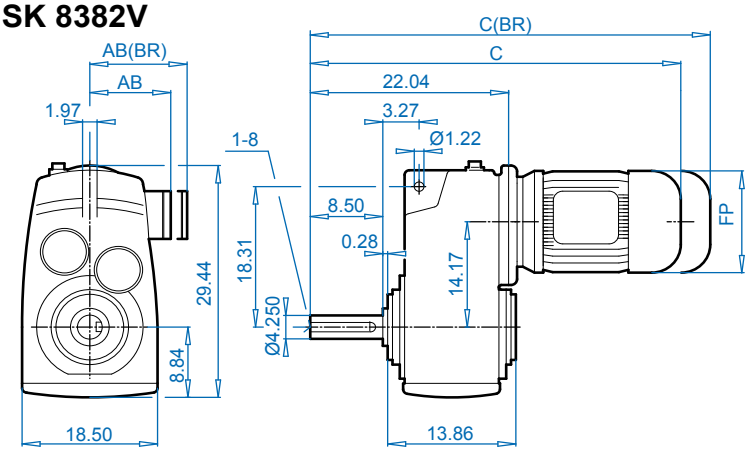


## SK 8382A

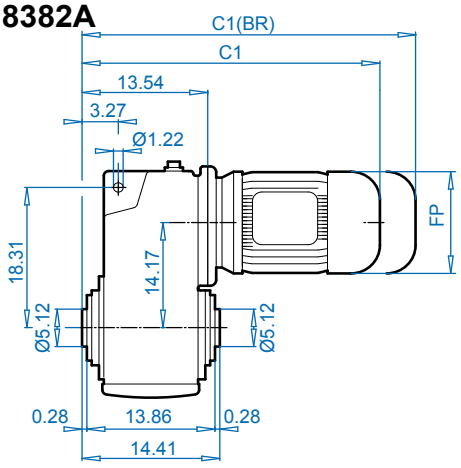


## SK 8382VF

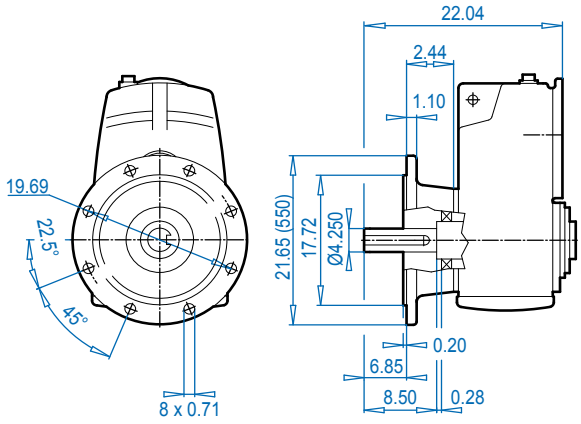


## SK 8382AF

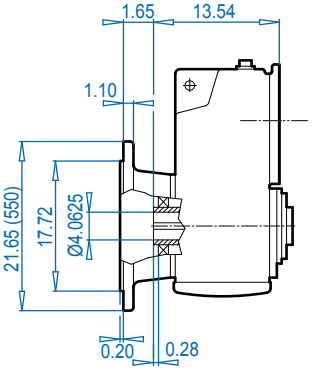


## SK 8382ASH

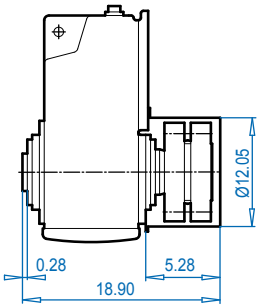


ALTERNATE SHAFTS SEE PAGES 388 - 393

## SK 8382V

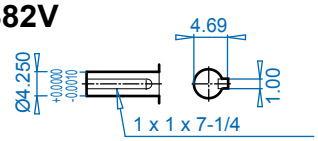


## SK 8382A

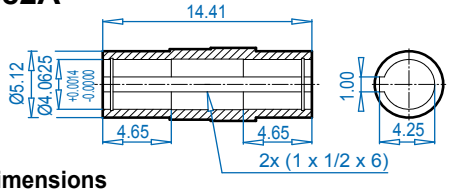


## SK 8382AB ⇨🕮 394

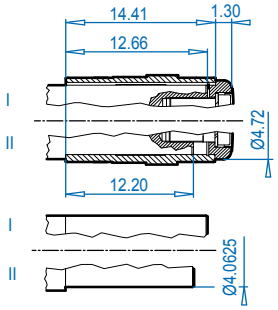


## SK 8382AS ⇨🕮 391

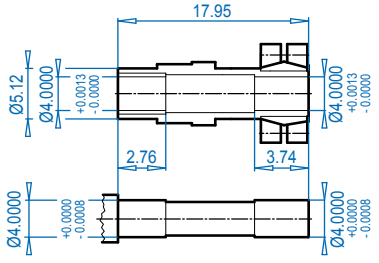


**Motor dimensions**

| Standard eff. | 100L | | 132S/M | 160M/L | | 180MX/LX | | 200L | 225S/M | | | For Other Connection Possibilities please see ⇨🕮 377 & 379 |
|---|---|---|---|---|---|---|---|---|---|---|---|---|
| Energy eff. | 100LH | 112MH | 132SH/MH | 160MH | 160LH | | 180MH/LH | 200LH | | 225SH | 225MH | |
| AB | 6.65 | 7.05 | 8.03 | 8.90 | 8.90 | 8.90 | 10.20 | 12.05 | 12.05 | 12.80 | 12.80 |  |
| AB (BR) | 6.26 | 6.69 | 7.72 | 8.90 | 8.90 | 8.90 | 10.20 | 12.05 | 12.05 | - | - | |
| C1 | 25.63 | 26.41 | 30.71 | 32.40 | 33.97 | 33.97 | 37.28 | 40.67 | 40.67 | 40.55 | 40.55 | |
| C1 (BR) | 29.21 | 30.07 | 34.92 | 38.97 | 40.71 | 40.71 | 41.41 | 47.24 | 47.24 | - | - | |
| C | 34.13 | 34.91 | 39.21 | 40.90 | 42.47 | 42.47 | 45.78 | 49.17 | 49.17 | 49.05 | 49.05 | |
| C (BR) | 37.71 | 38.57 | 43.42 | 47.47 | 49.21 | 49.21 | 49.21 | 55.74 | 55.74 | - | - | |
| FP | 7.63 | 8.58 | 10.16 | 12.60 | 12.60 | 12.60 | 14.09 | 15.67 | 15.67 | 17.52 | 17.52 | |

**(BR)** denotes Brakemotor


Send Quote Requests to info@automatedpt.com
Call +1(800)985-6929 To Order or Order Online At Nordgearmotors.com

DRIVESYSTEMS





# SK 8382 + NEMA

## SK 8382V

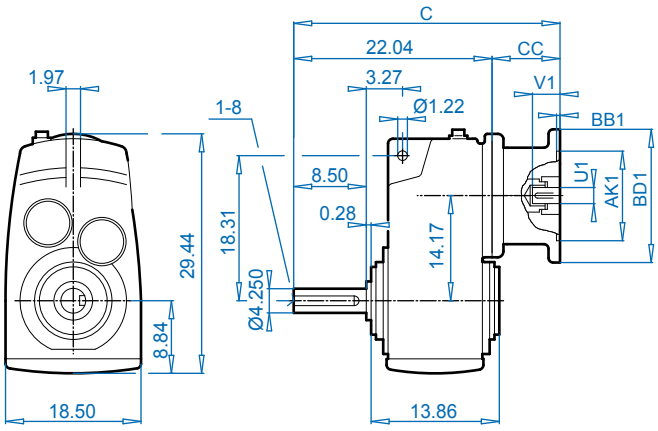


## SK 8382A

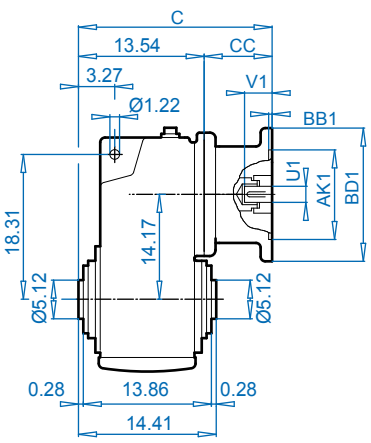


## NEMA Input

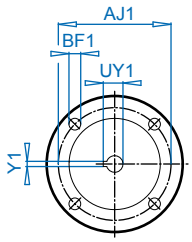


Dimensions in Inches
DIMENSIONS

## SK 8382VF

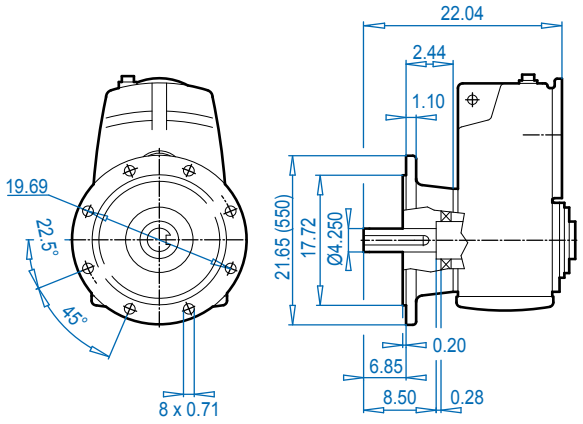


## SK 8382AF

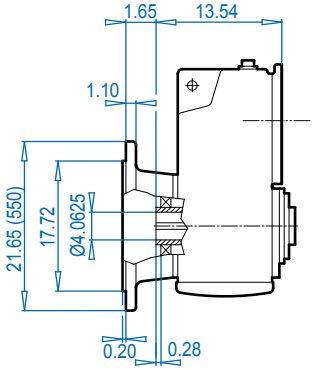


## SK 8382ASH

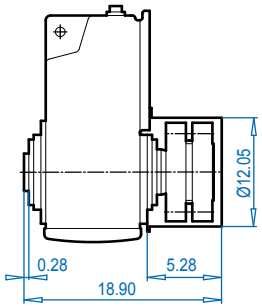


ALTERNATE SHAFTS SEE PAGES 388 - 393

## SK 8382V

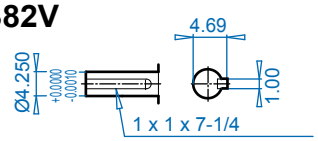


## SK 8382A

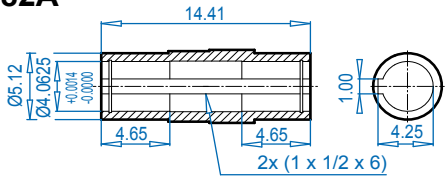


## SK 8382AB ⇨📖 394

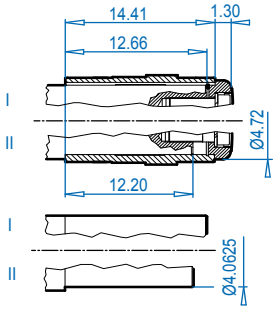


## SK 8382AS ⇨📖 391

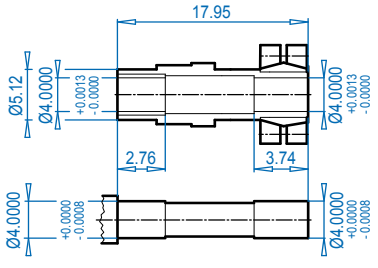


### NEMA Dimensions

| Type | AJ1 | AK1 | BB1 | BD1 | BF1 | U1 | V1 | UY1 | Y1 | C | C1 | CC |
|---|---|---|---|---|---|---|---|---|---|---|---|---|
| **180TC** | 7.25 | 8.500 | 0.23 | 9.17 | 0.59 | 1.125 | 2.62 | 1.24 | 0.250 | 29.58 | 21.08 | 7.50 |
| **210TC** | 7.25 | 8.500 | 0.39 | 9.17 | 0.59 | 1.375 | 3.12 | 1.52 | 0.312 | 29.58 | 21.08 | 7.50 |
| **250TC** | 7.25 | 8.500 | 0.23 | 9.17 | 0.59 | 1.625 | 3.75 | 1.80 | 0.375 | 33.46 | 24.96 | 11.38 |
| **280TC** | 9.00 | 10.500 | 0.23 | 13.78 | 0.59 | 1.875 | 4.38 | 2.03 | 0.500 | 33.46 | 24.96 | 11.38 |
| **320TC** | 11.00 | 12.500 | 0.23 | 13.78 | 0.71 | 2.125 | 5.00 | 2.35 | 0.500 | 32.43 | 23.93 | 10.35 |
| **360TC** | 11.00 | 12.500 | 0.16 | 17.72 | 0.71 | 2.375 | 5.62 | 2.65 | 0.625 | 35.35 | 26.85 | 13.27 |


Send Quote Requests to info@automatedpt.com
Call +1(800)985-6929 To Order or Order Online At Nordgearmotors.com

# SK 9282 + Motor





DRIVESYSTEMS



## SK 9282V

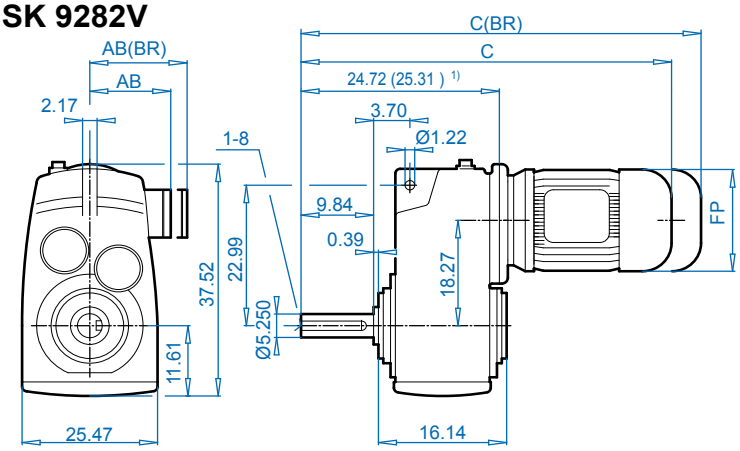


## SK 9282A

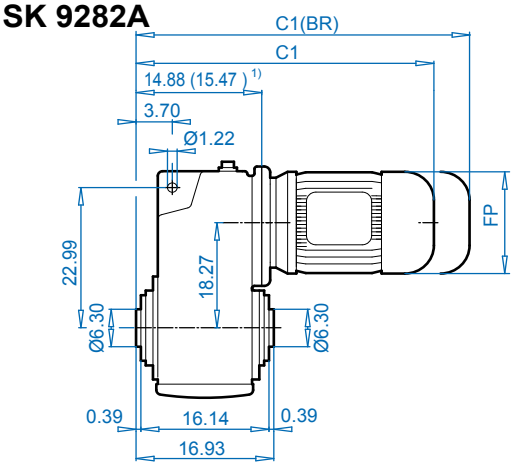


## SK 9282VF

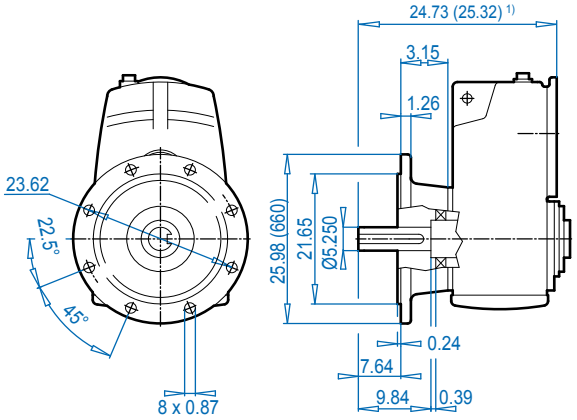


## SK 9282AF

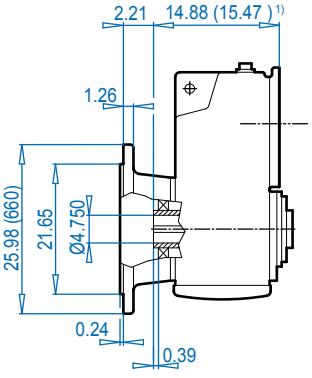


## SK 9282ASH

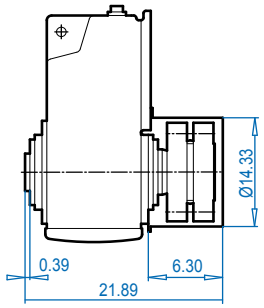


ALTERNATE SHAFTS SEE PAGES 388 - 393

## SK 9282V

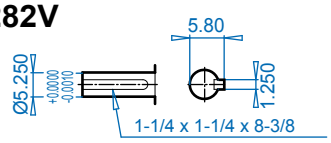


## SK 9282A

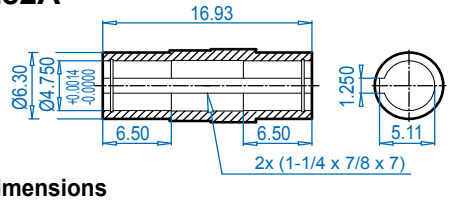


## SK 9282AB ⇨🕮 394

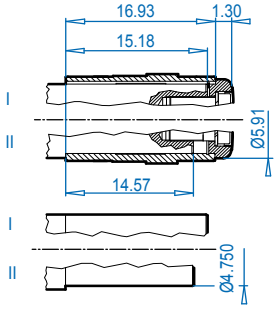


## SK 9282AS ⇨🕮 391

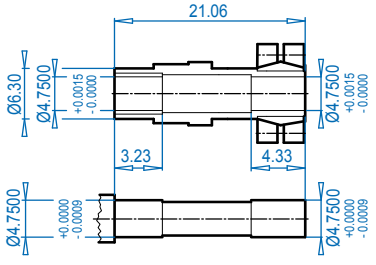


### Motor dimensions

| Standard eff. | 225S/M | | | 250S/M[1)] | | 280S[1)] | 280M[1)] | | 315S[1)] | 315Ma[1)] | For Other Connection Possibilities please see ⇨🕮 377 & 379 |
|---|---|---|---|---|---|---|---|---|---|---|---|
| Energy eff. | | 225SH | 225MH | | 250MH[1)] | 280SH[1)] | | 280MH[1)] | 315SH[1)] | 315MHa[1)] | |
| AB | 12.05 | 12.80 | 12.80 | 15.43 | 15.43 | 17.01 | 17.01 | 17.01 | 20.28 | 20.28 |  |
| AB (BR) | 12.05 | - | - | 15.43 | 15.43 | 17.01 | 17.01 | 17.01 | - | - | |
| C1 | 41.97 | 41.85 | 41.85 | 45.39 | 48.15 | 49.53 | 47.75 | 52.08 | 53.66 | 59.17 | |
| C1 (BR) | 48.54 | - | - | 53.66 | 56.41 | 60.75 | 58.38 | 62.71 | - | - | |
| C | 51.81 | 51.69 | 51.69 | 55.23 | 57.99 | 59.37 | 57.59 | 61.92 | 63.50 | 69.01 | |
| C (BR) | 58.38 | - | - | 63.50 | 66.25 | 70.59 | 58.62 | 72.55 | - | - | |
| FP | 15.67 | 17.52 | 17.52 | 19.49 | 19.49 | 22.64 | 21.85 | 21.85 | 25.39 | 25.39 | |

**(BR)** denotes Brakemotor


Send Quote Requests to info@automatedpt.com
Call +1(800)985-6929 To Order or Order Online At Nordgearmotors.com

DRIVESYSTEMS





# SK 9282 + NEMA

## SK 9282V

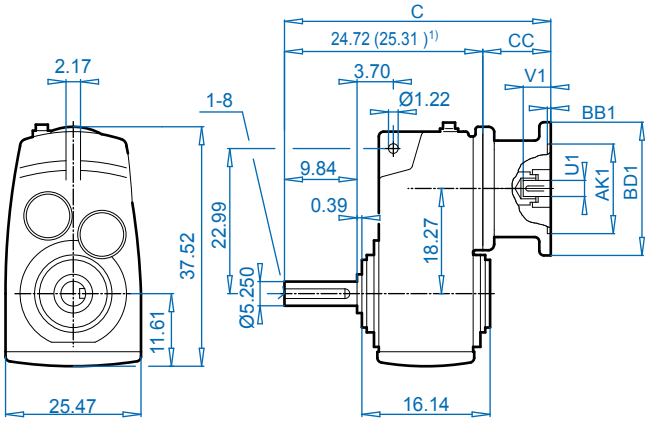


## SK 9282A

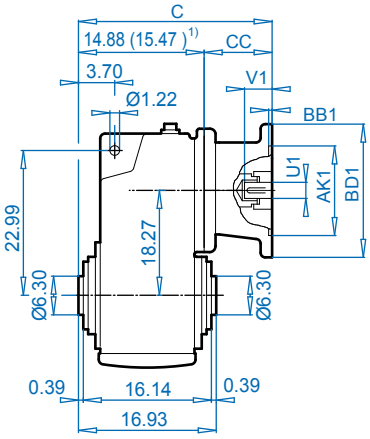


## NEMA Input

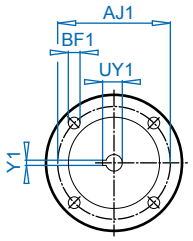


## SK 9282VF

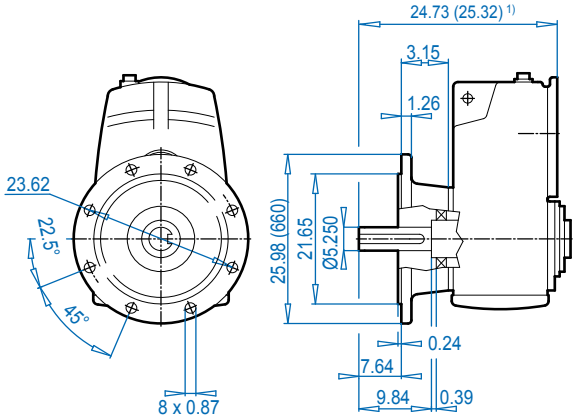


## SK 9282AF

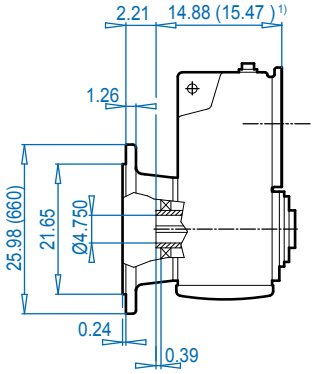


## SK 9282ASH

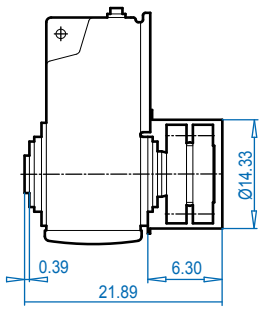


## SK 9282V

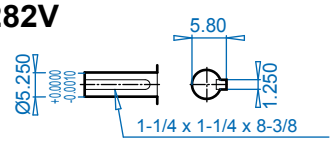


## SK 9282A

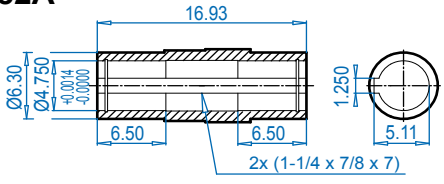


## SK 9282AB ⇨🕮 394

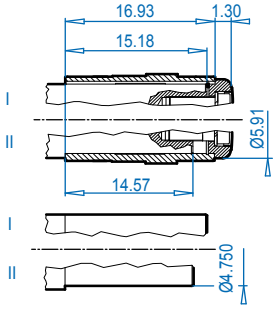


## SK 9282AS ⇨🕮 391

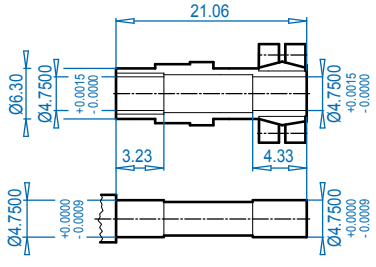


### NEMA Dimensions

| Type | AJ1 | AK1 | BB1 | BD1 | BF1 | U1 | V1 | UY1 | Y1 | C | C1 | CC |
|---|---|---|---|---|---|---|---|---|---|---|---|---|
| 180TC | 7.25 | 8.500 | 0.23 | 9.17 | 0.59 | 1.125 | 2.62 | 1.24 | 0.250 | 32.22 | 22.38 | 7.50 |
| 210TC | 7.25 | 8.500 | 0.39 | 9.17 | 0.59 | 1.375 | 3.12 | 1.52 | 0.312 | 32.22 | 22.38 | 7.50 |
| 250TC | 7.25 | 8.500 | 0.23 | 9.17 | 0.59 | 1.625 | 3.75 | 1.80 | 0.375 | 36.10 | 26.26 | 11.38 |
| 280TC | 9.00 | 10.500 | 0.23 | 13.78 | 0.59 | 1.875 | 4.38 | 2.03 | 0.500 | 36.10 | 26.26 | 11.38 |
| 320TC | 11.00 | 12.500 | 0.23 | 13.78 | 0.71 | 2.125 | 5.00 | 2.35 | 0.500 | 35.07 | 25.23 | 10.35 |
| 360TC[1)] | 11.00 | 12.500 | 0.16 | 21.65 | 0.71 | 2.375 | 5.62 | 2.65 | 0.625 | 37.99 | 28.15 | 13.27 |




©1999 - Subject to Change Without Notice
Send Quote Requests to info@automatedpt.com
Call +1(800)985-6929 To Order or Order Online At Nordgearmotors.com

# SK 9382 + Motor





DRIVESYSTEMS

DIMENSIONS

Dimensions in Inches

## SK 9382V

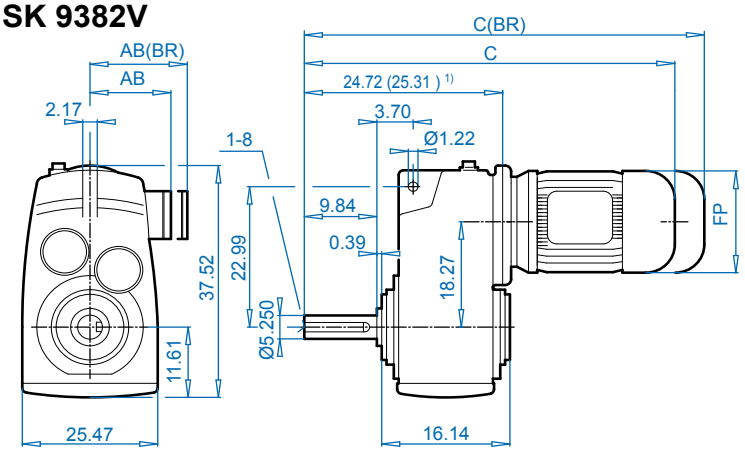


## SK 9382A

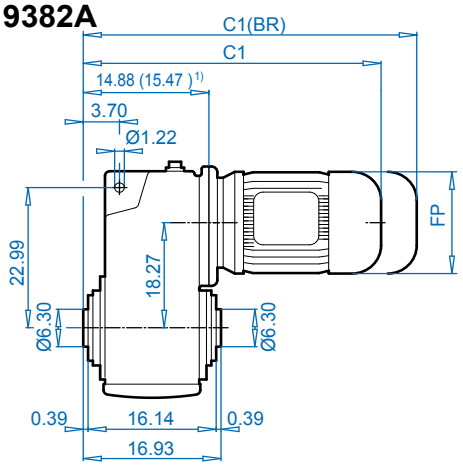


## SK 9382VF

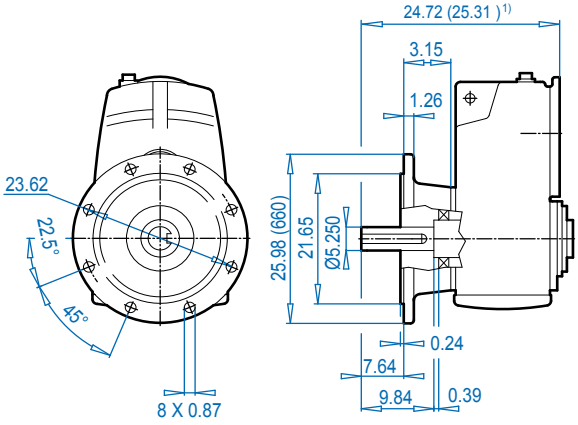


## SK 9382AF

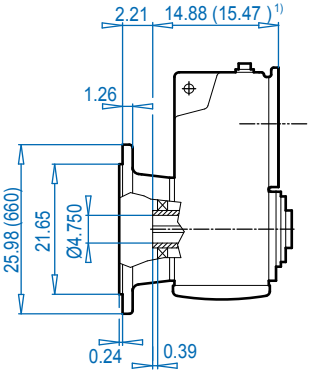


## SK 9382ASH

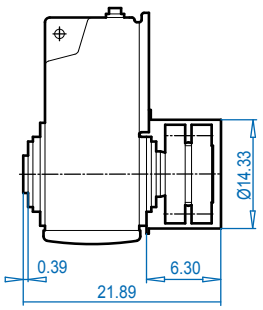


ALTERNATE SHAFTS SEE PAGES 388 - 393

## SK 9382V

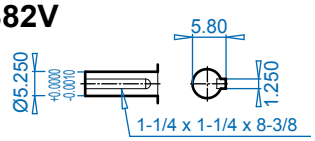


## SK 9382A

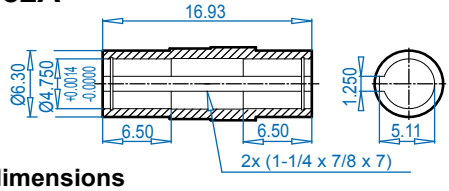


## SK 9382AB ⇨🕮 394

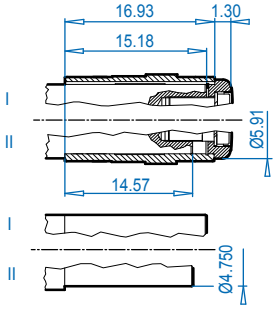


## SK 9382AS ⇨🕮 391

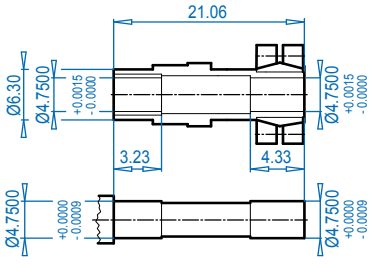


### Motor dimensions

| Standard eff. | 132S/M | 160M/L | | 180MX/LX | | 200L | 225S/M | | | 250M[1] | | 280S[1] | For Other Connection Possibilities please see ⇨🕮 377 & 379 |
|---|---|---|---|---|---|---|---|---|---|---|---|---|---|
| Energy eff. | 132SH/MH | 160MH | 160LH | | 180MH/LH | 200LH | | 225SH | 225MH | | 250MH[1] | 280SH[1] | |
| AB | 8.03 | 8.90 | 8.90 | 8.90 | 10.20 | 12.05 | 12.05 | 12.80 | 12.80 | 15.43 | 15.43 | 17.01 |  |
| AB (BR) | 7.72 | 8.90 | 8.90 | 8.90 | 10.20 | 12.05 | 12.05 | | | 15.43 | 15.43 | 17.01 | |
| C1 | 32.01 | 33.70 | 35.27 | 35.27 | 38.58 | 41.97 | 41.97 | 41.85 | 41.85 | 45.39 | 48.15 | 49.53 | |
| C1 (BR) | 36.22 | 40.27 | 42.01 | 42.01 | 42.71 | 48.54 | 48.54 | | | 53.66 | 56.41 | 60.75 | |
| C | 41.85 | 43.54 | 45.11 | 45.11 | 48.42 | 51.81 | 51.81 | 51.69 | 51.69 | 55.23 | 57.99 | 59.37 | |
| C (BR) | 46.06 | 50.11 | 51.85 | 51.85 | 52.55 | 58.38 | 58.38 | | | 63.50 | 66.25 | 70.59 | |
| FP | 10.16 | 12.60 | 12.60 | 12.60 | 14.09 | 15.67 | 15.67 | 17.52 | 17.52 | 19.49 | 19.49 | 22.64 | |

**(BR)** denotes Brakemotor


Send Quote Requests to info@automatedpt.com
Call +1(800)985-6929 To Order or Order Online At Nordgearmotors.com

DRIVESYSTEMS





# SK 9382 + NEMA

## SK 9382V

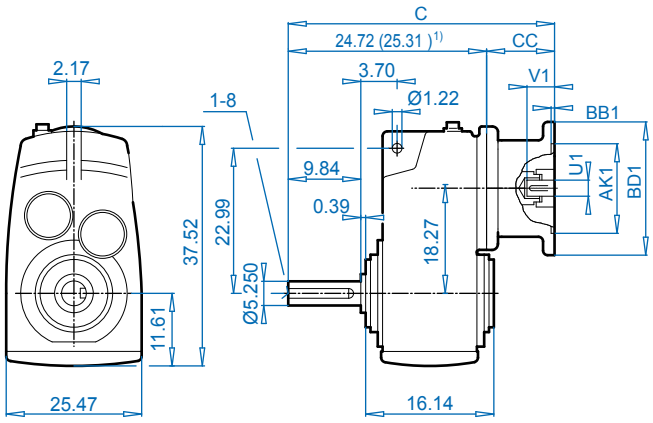


## SK 9382A

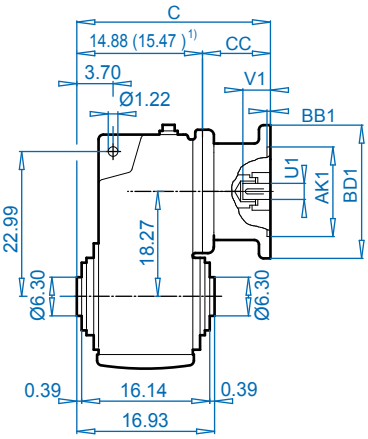


## NEMA Input

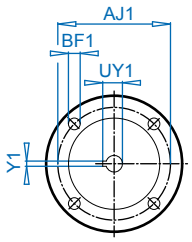


Dimensions in Inches
DIMENSIONS

## SK 9382VF

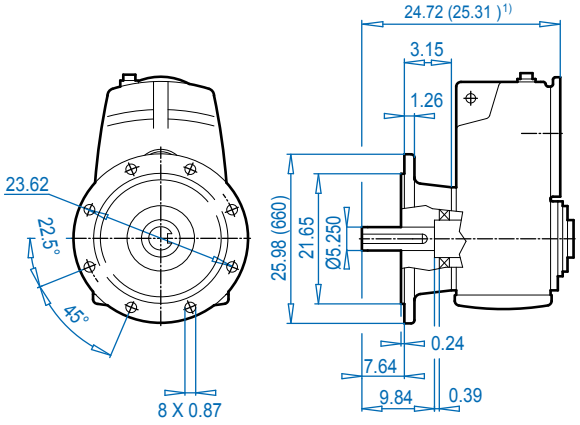


## SK 9382AF

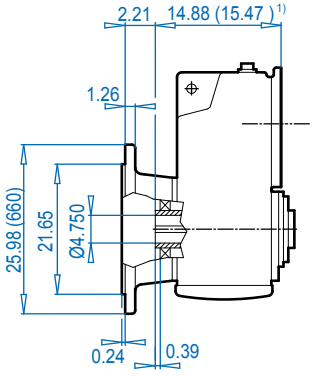


## SK 9382ASH

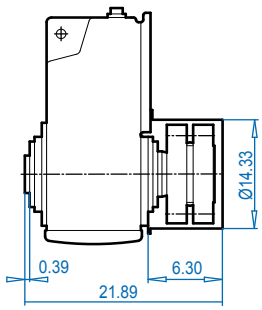


ALTERNATE SHAFTS SEE PAGES 388 - 393

## SK 9382V

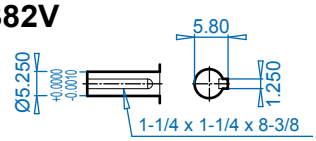


## SK 9382A

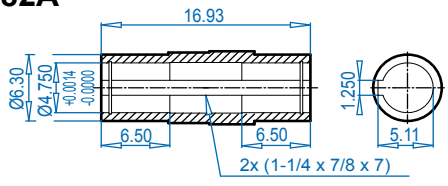


## SK 9382AB ⇨ 394

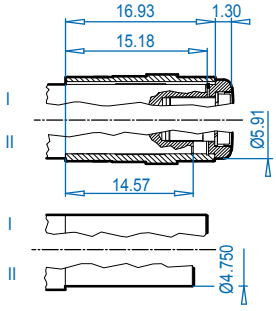


## SK 9382AS ⇨ 391

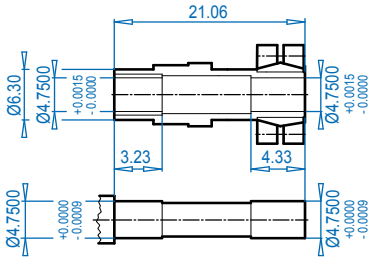


### NEMA Dimensions

| Type | AJ1 | AK1 | BB1 | BD1 | BF1 | U1 | V1 | UY1 | Y1 | C | C1 | CC |
|---|---|---|---|---|---|---|---|---|---|---|---|---|
| **180TC** | 7.25 | 8.500 | 0.23 | 9.17 | 0.59 | 1.125 | 2.62 | 1.24 | 0.250 | 32.22 | 22.38 | 7.50 |
| **210TC** | 7.25 | 8.500 | 0.39 | 9.17 | 0.59 | 1.375 | 3.12 | 1.52 | 0.312 | 32.22 | 22.38 | 7.50 |
| **250TC** | 7.25 | 8.500 | 0.23 | 9.17 | 0.59 | 1.625 | 3.75 | 1.80 | 0.375 | 36.10 | 26.26 | 11.38 |
| **280TC** | 9.00 | 10.500 | 0.23 | 13.78 | 0.59 | 1.875 | 4.38 | 2.03 | 0.500 | 36.10 | 26.26 | 11.38 |
| **320TC** | 11.00 | 12.500 | 0.23 | 13.78 | 0.71 | 2.125 | 5.00 | 2.35 | 0.500 | 35.07 | 25.23 | 10.35 |
| **360TC**[1)] | 11.00 | 12.500 | 0.16 | 17.72 | 0.71 | 2.375 | 5.62 | 2.65 | 0.625 | 37.99 | 28.15 | 13.27 |


Send Quote Requests to info@automatedpt.com
Call +1(800)985-6929 To Order or Order Online At Nordgearmotors.com

# SK 10282 + Motor





DRIVESYSTEMS



## SK 10282VZ

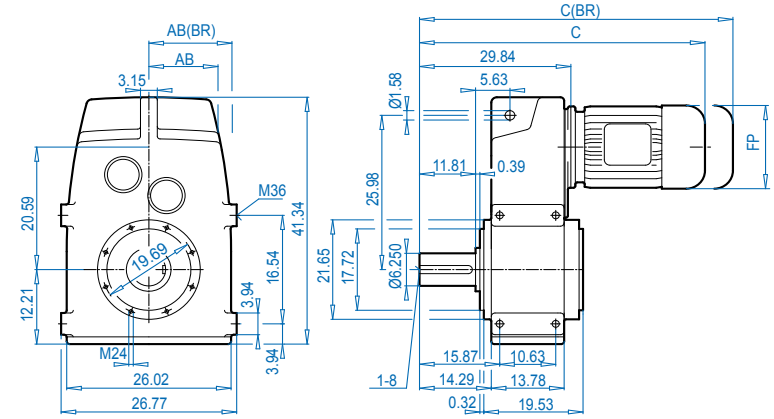


## SK 10282AZSH

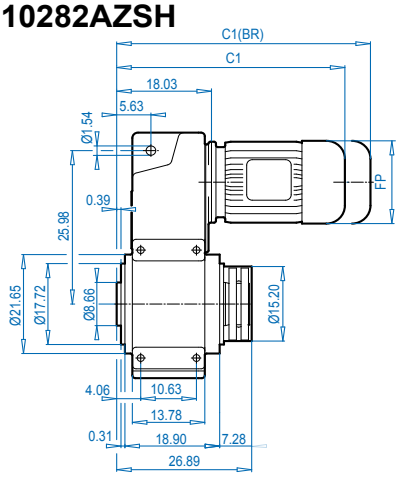


## SK 10282VF

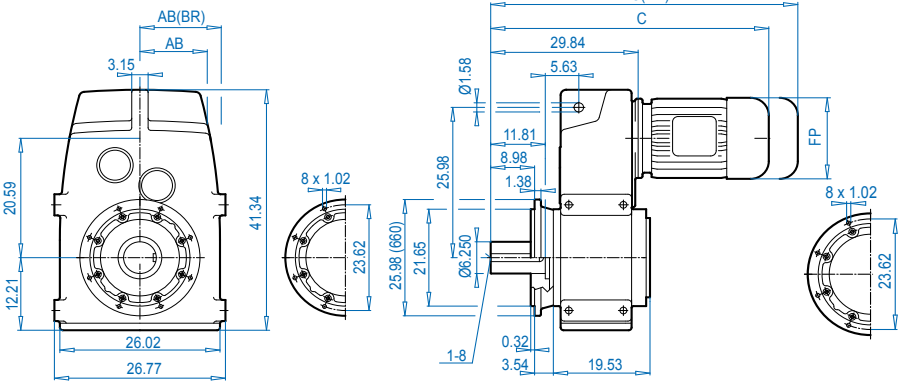


## SK 10282AFSH

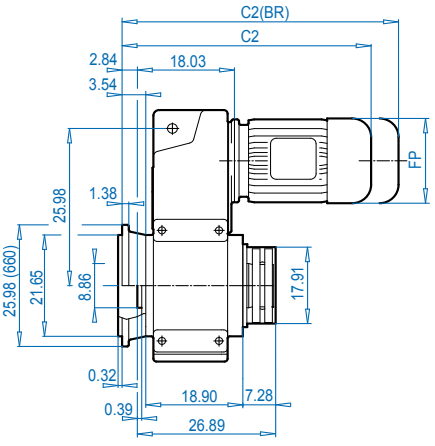


## SK 10282V

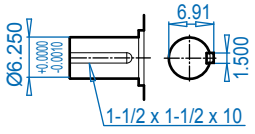


## SK 10282**AZSH** ⇨🕮 391

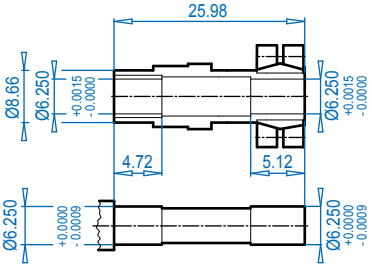


### Motor dimensions

| Standard efficiency | 280M | | 315S | 315Ma | For Other Connection Possibilities please see ⇨🕮 377 & 379 |
|---|---|---|---|---|---|
| Energy efficiency | | 280MH | 315SH | 315MHa | |
| AB | 17.01 | 17.01 | 20.28 | 20.28 |  |
| AB (BR) | 17.01 | 17.01 | - | - | |
| C1 | 50.32 | 54.65 | 56.23 | 61.74 | |
| C1 (BR) | 60.95 | 65.28 | - | - | |
| C2 | 53.15 | 57.48 | 59.06 | 64.57 | |
| C2 (BR) | 63.78 | 68.11 | - | - | |
| C | 62.13 | 66.46 | 68.04 | 73.55 | |
| C (BR) | 72.76 | 77.09 | - | - | |
| FP | 21.85 | 21.85 | 25.39 | 25.39 | |

**(BR)** denotes Brakemotor

ALTERNATE SHAFTS SEE PAGES 388 - 393


Send Quote Requests to info@automatedpt.com
Call +1(800)985-6929 To Order or Order Online At Nordgearmotors.com

DRIVESYSTEMS





# SK 10282 + NEMA

## SK 10282VZ

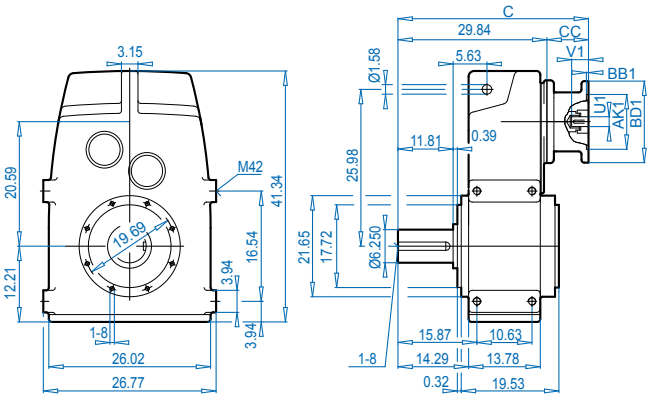


## SK 10282AZSH

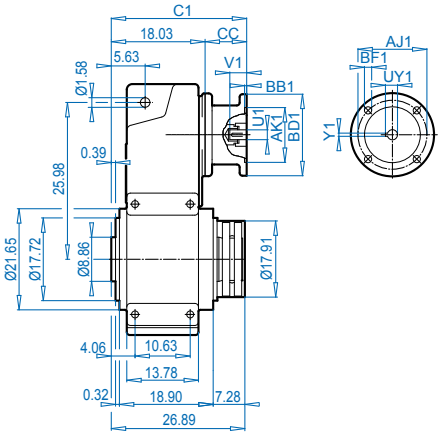


## SK 10282VF

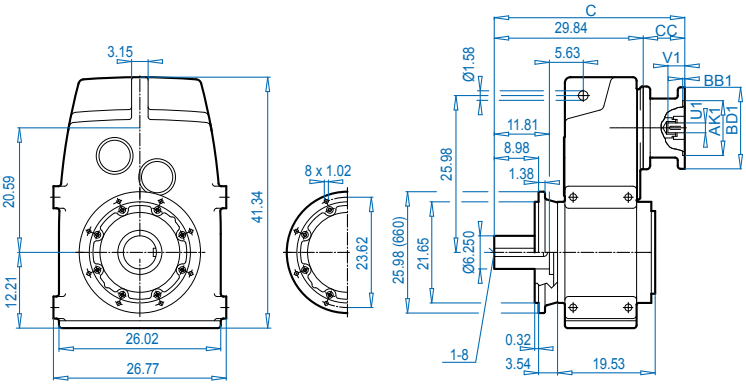


## SK 10282AFSH

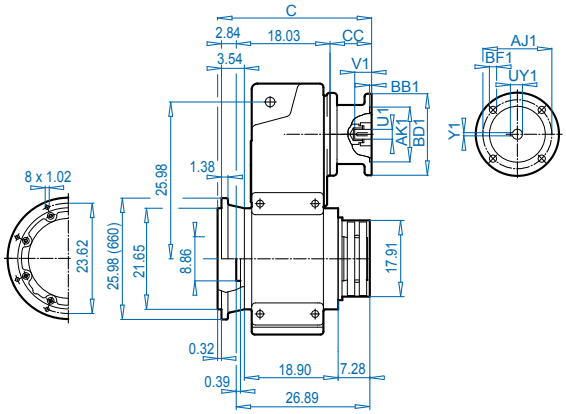


## SK 10282V

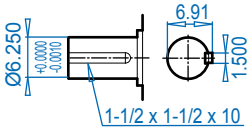


## SK 10282**AZSH** ⇨📖 391

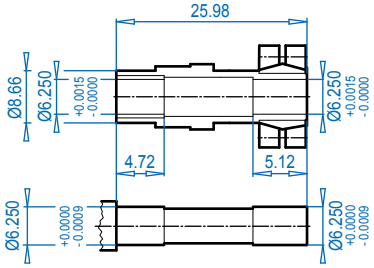


**NEMA Dimensions**

| Type | AJ1 | AK1 | BB1 | BD1 | BF1 | U1 | V1 | UY1 | Y1 | C | C1 | CC |
|---|---|---|---|---|---|---|---|---|---|---|---|---|
| **360TC** | 11.00 | 12.500 | 0.16 | 21.65 | 0.71 | 2.375 | 5.62 | 2.65 | 0.625 | 43.98 | 32.17 | 13.78 |

Dimensions in Inches
DIMENSIONS
ALTERNATE SHAFTS SEE PAGES 388 - 393


Send Quote Requests to info@automatedpt.com
Call +1(800)985-6929 To Order or Order Online At Nordgearmotors.com

# SK 10382 + Motor





DRIVESYSTEMS



## SK 10382VZ

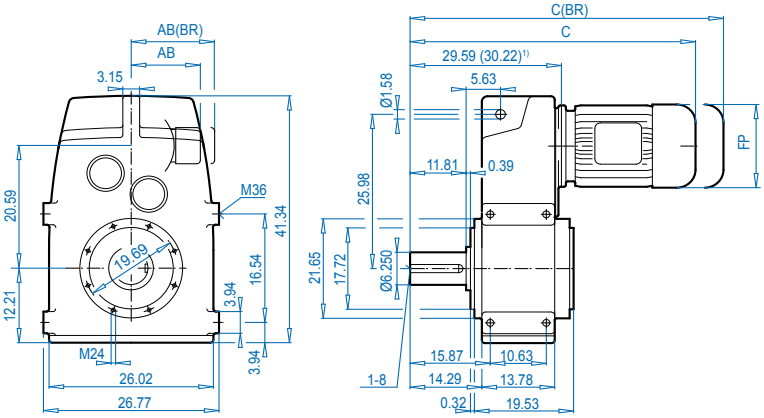


## SK 10382AZSH

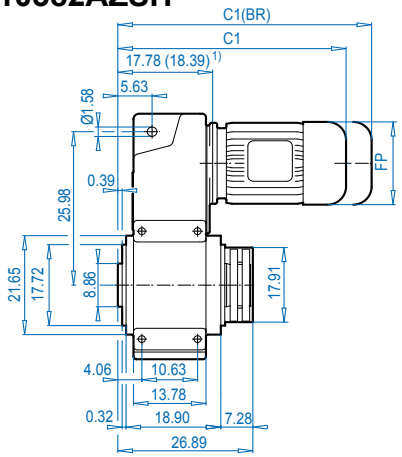


## SK 10382VF

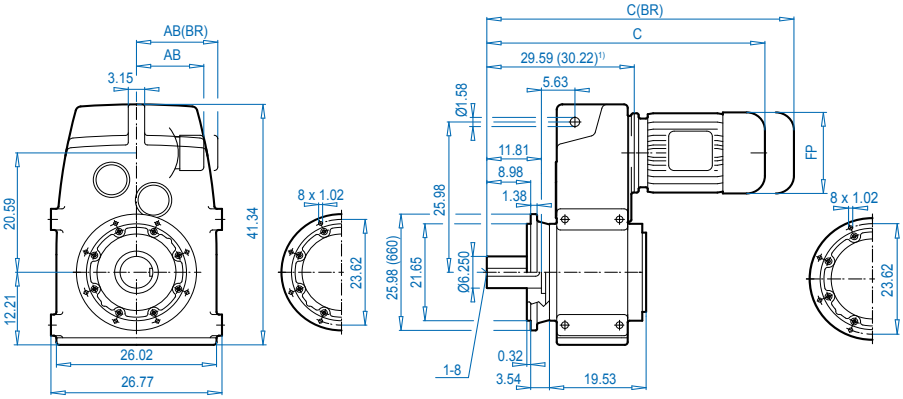


## SK 10382AFSH

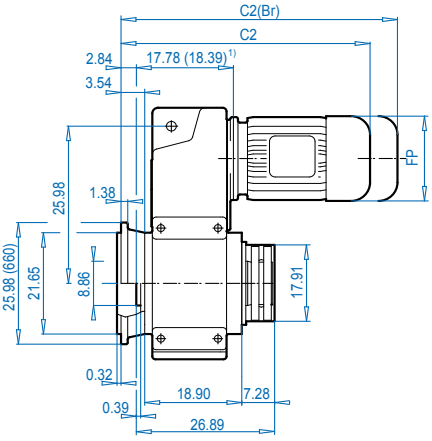


## SK 10382V

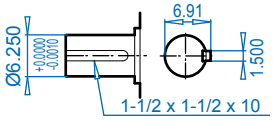


## SK 10382**AZSH** ⇨🕮 391

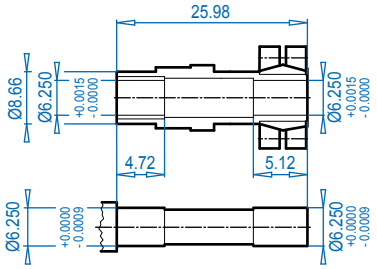


ALTERNATE SHAFTS SEE PAGES 388 - 393

### Motor dimensions

| Standard eff. | 132S/M | 160M/L | | 180MX/LX | | 200L | 225S/M | | | 250M[1)] | | 280S[1)] | 280M[1)] | | 315S[1)] | 315Ma[1)] | For Other Connection Possibilities please see ⇨🕮 377 & 379 |
|---|---|---|---|---|---|---|---|---|---|---|---|---|---|---|---|---|---|
| Energy eff. | 132SH/MH | 160MH | 160LH | | 180MH/LH | 200LH | | 225SH | 225MH | | 250MH[1)] | 280SH[1)] | | 280MH[1)] | 315SH[1)] | 315MHa[1)] | |
| **AB** | 8.03 | 8.90 | 8.90 | 8.90 | 10.20 | 12.05 | 12.05 | 12.80 | 12.80 | 15.43 | 15.43 | 17.01 | 17.01 | 17.01 | 20.28 | 20.28 |  |
| **AB (BR)** | 7.72 | 8.90 | 8.90 | 8.90 | 10.20 | 12.05 | 12.05 | - | - | 15.43 | 15.43 | 17.01 | 17.01 | 17.01 | - | - | |
| **C1** | 34.89 | 36.58 | 38.15 | 38.15 | 41.46 | 44.85 | 44.85 | 44.73 | 44.73 | 48.31 | 51.07 | 52.45 | 50.67 | 55.00 | 56.58 | 62.09 | |
| **C1 (BR)** | 39.10 | 43.15 | 44.89 | 44.89 | 46.38 | 51.42 | 51.42 | - | - | 56.58 | 59.33 | 61.70 | 61.70 | 65.63 | - | - | |
| **C2** | 37.72 | 39.41 | 40.98 | 40.98 | 44.29 | 47.68 | 47.68 | 47.56 | 47.56 | 51.14 | 53.90 | 55.28 | 53.50 | 57.83 | 59.41 | 64.92 | |
| **C2 (BR)** | 41.93 | 45.98 | 47.72 | 47.72 | 48.42 | 54.25 | 54.25 | - | - | 59.41 | 62.16 | 66.50 | 64.13 | 68.46 | - | - | |
| **C** | 46.70 | 48.39 | 49.96 | 49.96 | 53.27 | 56.66 | 56.66 | 56.54 | 56.54 | 60.12 | 62.88 | 64.26 | 62.48 | 66.81 | 68.39 | 73.90 | |
| **C (BR)** | 50.91 | 54.96 | 56.70 | 56.70 | 57.40 | 63.23 | 63.23 | - | - | 68.39 | 71.14 | 75.48 | 73.11 | 77.44 | - | - | |
| **FP** | 10.16 | 12.60 | 12.60 | 12.60 | 14.09 | 15.67 | 15.67 | 17.52 | 17.52 | 19.49 | 19.49 | 22.64 | 21.85 | 21.85 | 25.39 | 25.39 | |

**(BR)** denotes Brakemotor


Send Quote Requests to info@automatedpt.com
Call +1(800)985-6929 To Order or Order Online At Nordgearmotors.com

DRIVESYSTEMS





# SK 10382 + NEMA

## SK 10382VZ

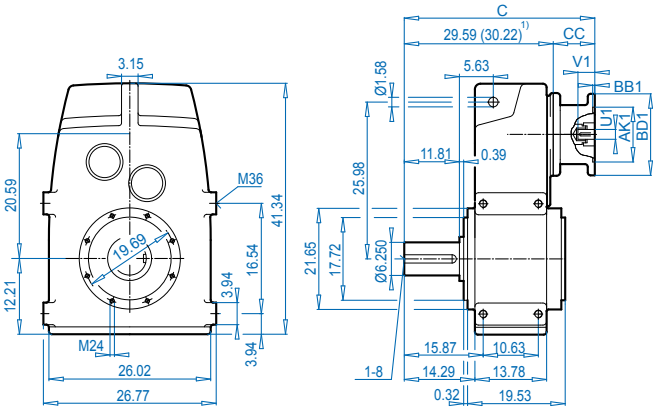


## SK 10382AZSH

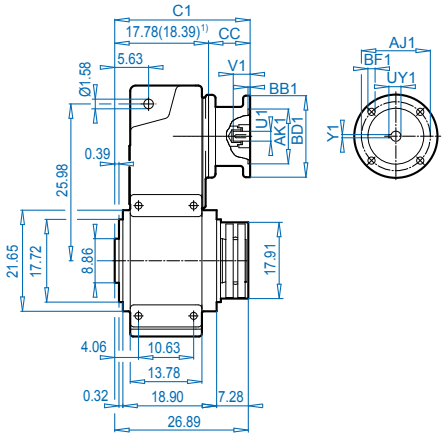


## SK 10382VF

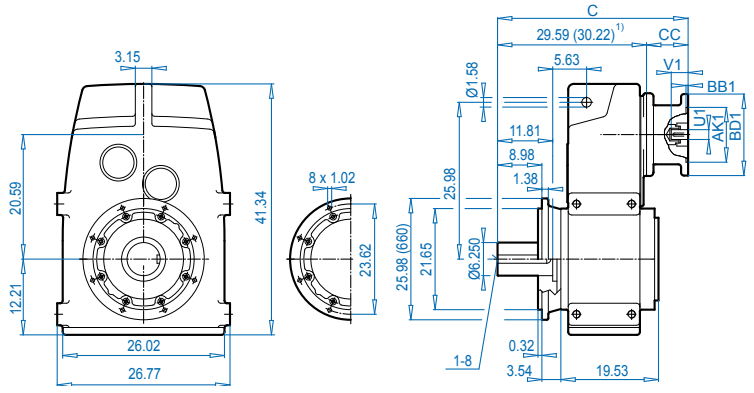


## SK 10382AFSH

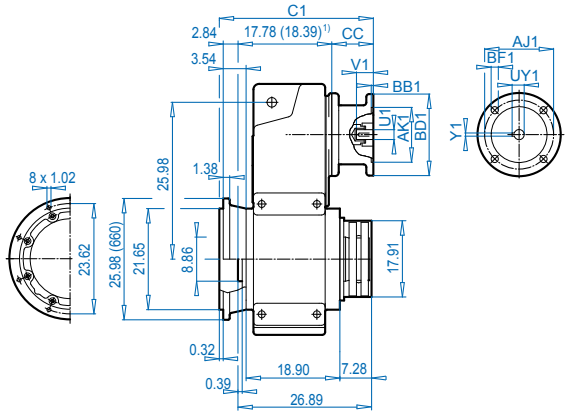


## SK 10382V

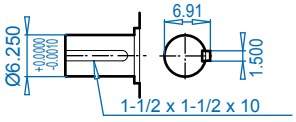


## SK 10382**AZSH**

⇨📖 391

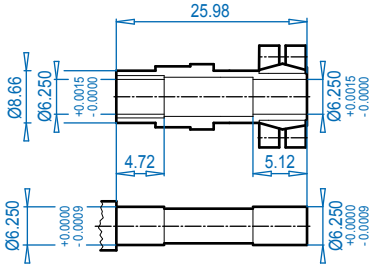


### NEMA Dimensions

| Type | AJ1 | AK1 | BB1 | BD1 | BF1 | U1 | V1 | UY1 | Y1 | C | C1 | CC |
|---|---|---|---|---|---|---|---|---|---|---|---|---|
| **180TC** | 7.25 | 8.500 | 0.23 | 9.17 | 0.59 | 1.125 | 2.62 | 1.24 | 0.250 | 37.09 | 25.28 | 7.50 |
| **210TC** | 7.25 | 8.500 | 0.23 | 9.17 | 0.59 | 1.375 | 3.12 | 1.52 | 0.312 | 37.09 | 25.28 | 7.50 |
| **250TC** | 7.25 | 8.500 | 0.23 | 9.17 | 0.59 | 1.625 | 3.75 | 1.80 | 0.375 | 41.58 | 29.77 | 11.38 |
| **280TC** | 9.00 | 10.500 | 0.23 | 13.78 | 0.59 | 1.875 | 4.38 | 2.03 | 0.500 | 41.58 | 29.77 | 11.38 |
| **320TC** | 11.00 | 12.500 | 0.23 | 13.78 | 0.71 | 2.125 | 5.00 | 2.35 | 0.500 | 40.55 | 28.74 | 10.35 |
| **360TC**1) | 11.00 | 12.500 | 0.16 | 21.65 | 0.71 | 2.375 | 5.62 | 2.65 | 0.625 | 43.98 | 32.17 | 13.78 |




G1000 Subject to Change Without Notice
Send Quote Requests to info@automatedpt.com
Call +1(800)985-6929 To Order or Order Online At Nordgearmotors.com

# SK 11282 + Motor





DRIVESYSTEMS



## SK 11282VZ

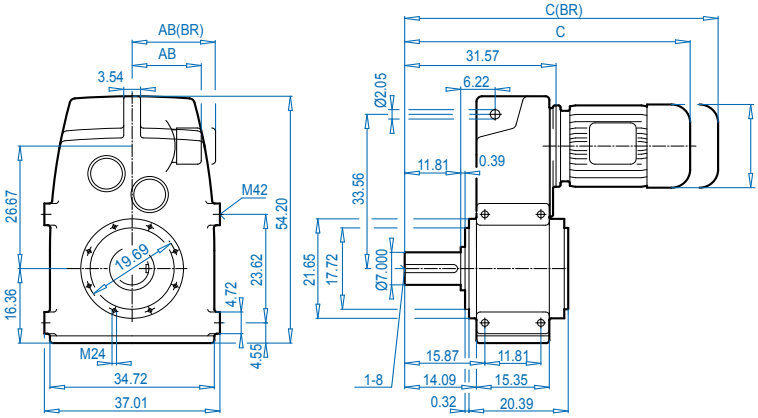


## SK 11282AZSH

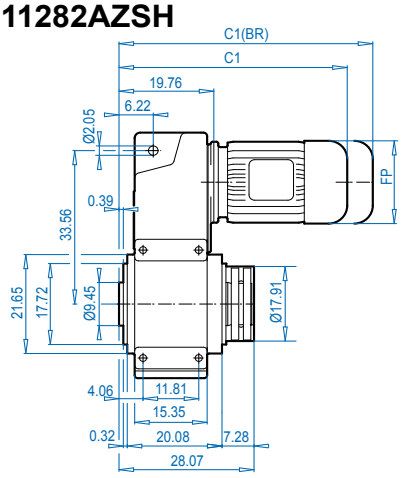


## SK 11282VF

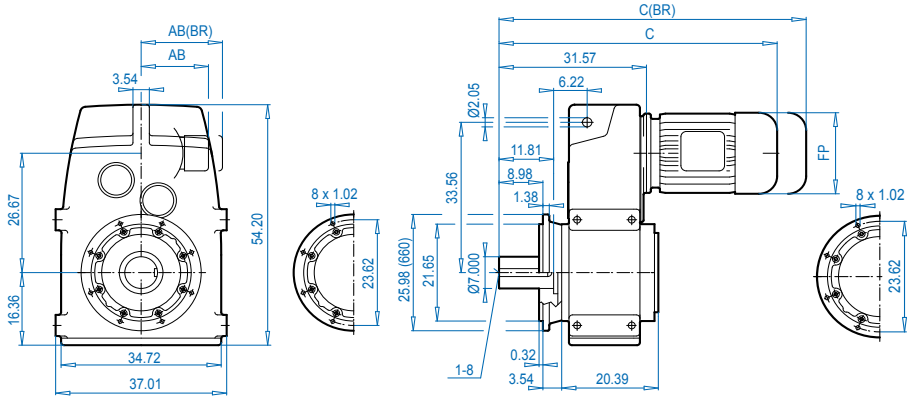


## SK 11282AFSH

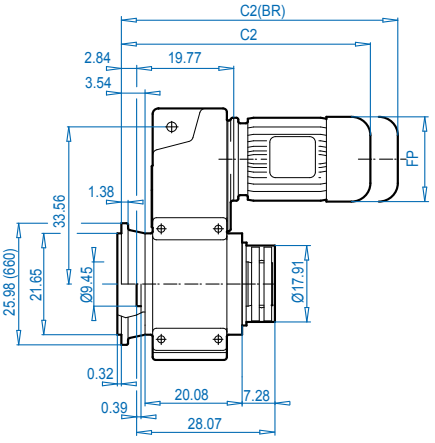




## SK 11282V

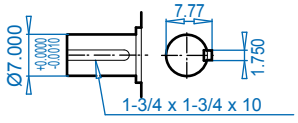


## SK 11282**AZSH** ⇨🕮 391

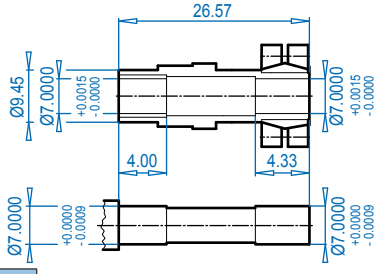


### Motor dimensions

| Standard efficiency | 280M | | 315S | 315Ma | For Other Connection Possibilities please see ⇨🕮 377 & 379 |
|---|---|---|---|---|---|
| Energy efficiency | | 280MH | 315SH | 315MHa | |
| AB | 17.01 | 17.01 | 20.28 | 20.28 |  |
| AB (BR) | 17.01 | 17.01 | - | - | |
| C1 | 51.69 | 56.02 | 57.60 | 63.11 | |
| C1 (BR) | 62.32 | 66.65 | - | - | |
| C2 | 54.53 | 58.86 | 60.44 | 65.95 | |
| C2 (BR) | 65.16 | 69.49 | - | - | |
| C | 63.51 | 67.84 | 69.42 | 74.93 | |
| C (BR) | 74.14 | 78.47 | - | - | |
| FP | 21.85 | 21.85 | 25.39 | 25.39 | |

**(BR)** denotes Brakemotor


Send Quote Requests to info@automatedpt.com
Call +1(800)985-6929 To Order or Order Online At Nordgearmotors.com

DRIVESYSTEMS





# SK 11282 + NEMA

## SK 11282VZ

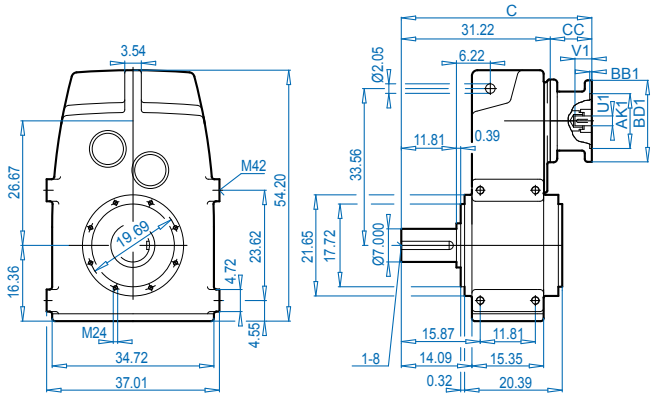


## SK 11282AZSH

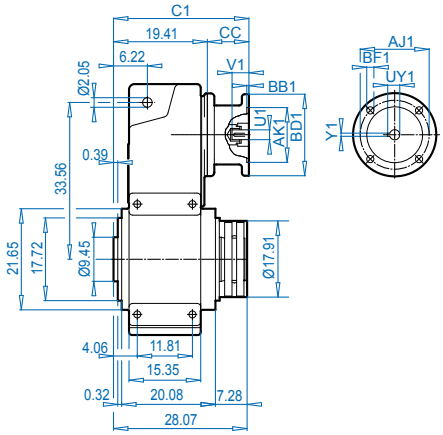


## SK 11282VF

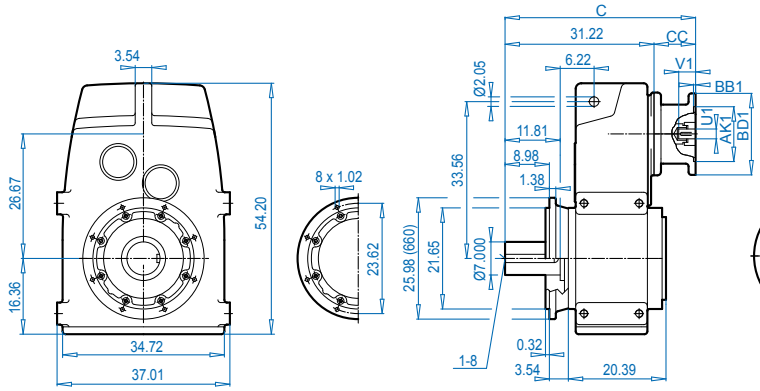


## SK 11282AFSH

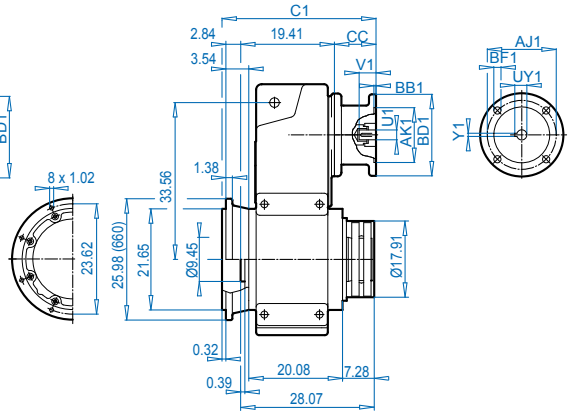


## SK 11282V

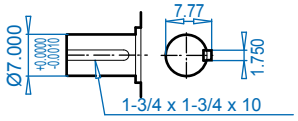


## SK 11282**AZSH** ⇨📖 391

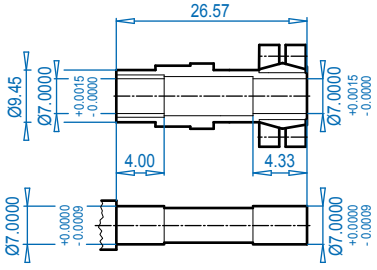


### NEMA Dimensions

| Type | AJ1 | AK1 | BB1 | BD1 | BF1 | U1 | V1 | UY1 | Y1 | C | C1 | CC |
|---|---|---|---|---|---|---|---|---|---|---|---|---|
| 360TC | 11.00 | 12.500 | 0.16 | 21.65 | 0.71 | 2.375 | 5.62 | 2.65 | 0.625 | 44.14 | 32.32 | 13.27 |




G1000 Subject to Change Without Notice
Send Quote Requests to info@automatedpt.com
Call +1(800)985-6929 To Order or Order Online At Nordgearmotors.com

# SK 11382 + Motor





DRIVESYSTEMS



## SK 11382VZ

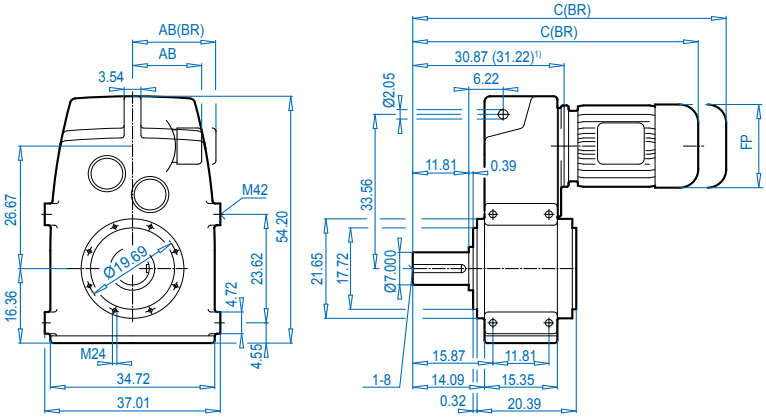


## SK 11382AZSH

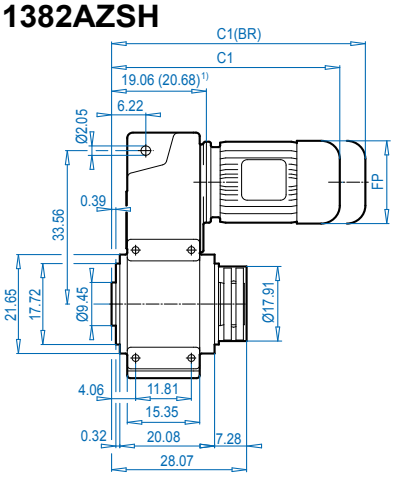


## SK 11382VF

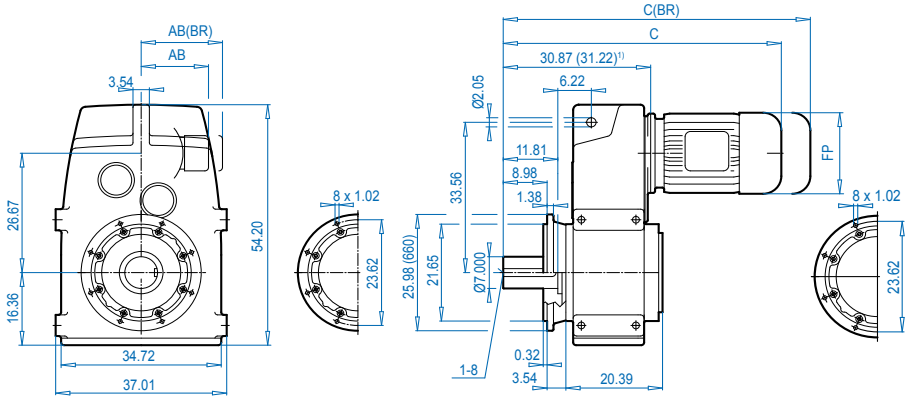


## SK 11382AFSH

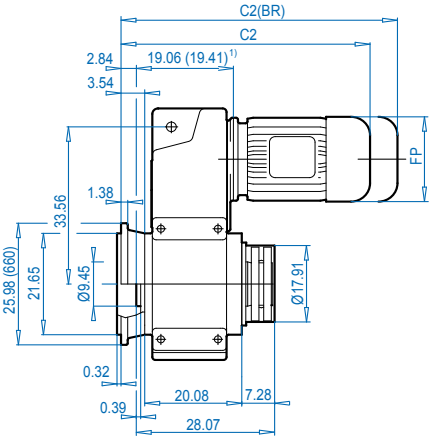


## SK 11382V

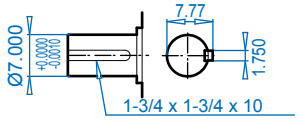


## SK 11382**AZSH** ⇨🕮 391

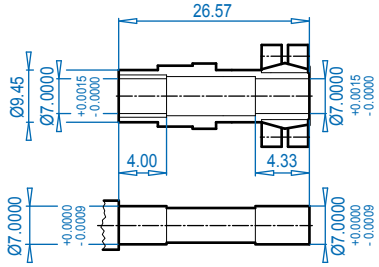


### Motor dimensions

| Standard eff. | 160M/L | | 180MX/LX | | 200L | 225S/M | | | 250M | | 280S | 280M1) | | 315S1) | 315Ma1) | For Other Connection Possibilities please see ⇨🕮 377 & 379 |
|---|---|---|---|---|---|---|---|---|---|---|---|---|---|---|---|---|
| Energy eff. | 160MH | 160LH | | 180MH/LH | 200LH | | 225SH | 225MH | | 250MH | 280SH | | 280MH1) | 315SH1) | 315MHa1) | |
| AB | 8.90 | 8.90 | 8.90 | 10.20 | 12.05 | 12.05 | 12.80 | 12.80 | 15.43 | 15.43 | 17.01 | 17.01 | 17.01 | 20.28 | 20.28 |  |
| AB (BR) | 8.90 | 8.90 | 8.90 | 10.20 | 12.05 | 12.05 | - | - | 15.43 | 15.43 | 17.01 | 17.01 | 17.01 | - | - | |
| C1 | 37.87 | 39.44 | 39.44 | 42.75 | 46.14 | 46.14 | 46.02 | 46.02 | 48.97 | 51.73 | 53.11 | 51.69 | 56.02 | 57.60 | 63.11 | |
| C1 (BR) | 44.44 | 46.18 | 46.18 | 46.88 | 52.71 | 52.71 | - | - | 60.00 | 64.33 | 62.32 | 66.65 | 66.65 | - | - | |
| C2 | 40.71 | 42.28 | 42.28 | 45.59 | 48.98 | 48.98 | 48.86 | 48.86 | 51.81 | 54.57 | 55.95 | 54.53 | 58.86 | 60.44 | 65.95 | |
| C2 (BR) | 47.28 | 49.02 | 49.02 | 49.72 | 55.55 | 55.55 | | - | 60.08 | 62.84 | 67.17 | 65.16 | 69.49 | - | - | |
| C | 49.69 | 51.26 | 51.26 | 54.57 | 57.96 | 57.96 | 57.84 | 57.84 | 60.79 | 63.55 | 64.93 | 63.51 | 67.84 | 69.42 | 74.93 | |
| C (BR) | 56.26 | 58.00 | 58.00 | 58.70 | 64.53 | 64.53 | - | - | 69.06 | 71.82 | 76.15 | 74.14 | 78.47 | - | - | |
| FP | 12.60 | 12.60 | 12.60 | 14.09 | 15.67 | 15.67 | 17.52 | 17.52 | 19.49 | 19.49 | 22.64 | 21.85 | 21.85 | 25.39 | 25.39 | |

**(BR)** denotes Brakemotor

ALTERNATE SHAFTS SEE PAGES 388 - 393


Send Quote Requests to info@automatedpt.com
Call +1(800)985-6929 To Order or Order Online At Nordgearmotors.com

DRIVESYSTEMS





# SK 11382 + NEMA

## SK 11382VZ

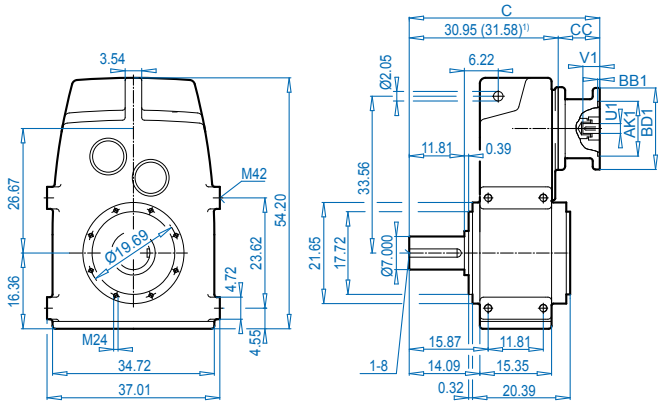


## SK 11382AZSH

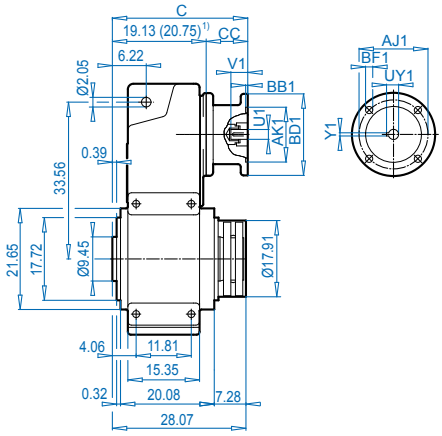


## SK 11382VF

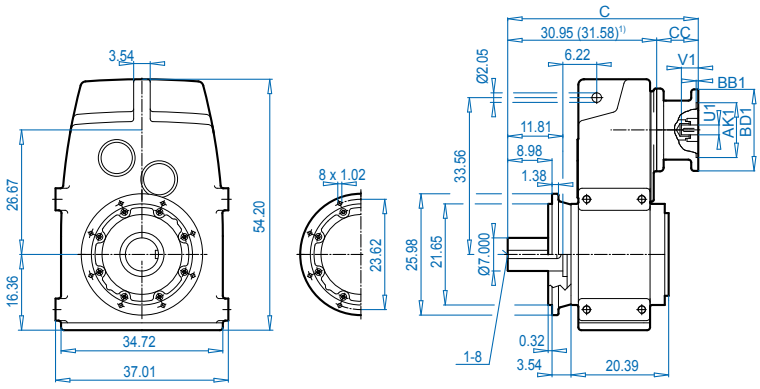


## SK 11382AFSH

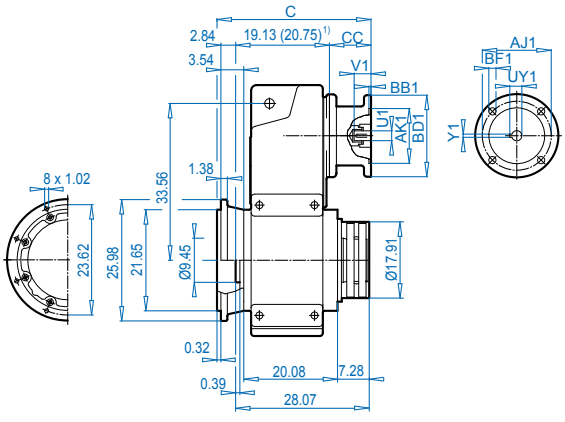


## SK 11382V

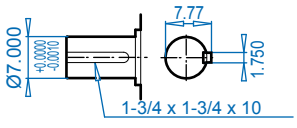


## SK 11382**AZSH** ⇨🕮 391

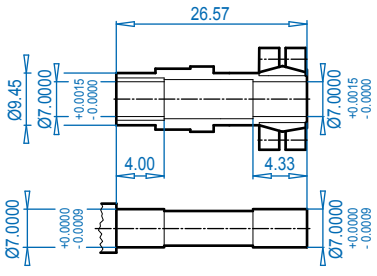


### NEMA Dimensions

| Type | AJ1 | AK1 | BB1 | BD1 | BF1 | U1 | V1 | UY1 | Y1 | C | C1 | CC |
|---|---|---|---|---|---|---|---|---|---|---|---|---|
| **180TC** | 7.25 | 8.500 | 0.23 | 9.17 | 0.59 | 1.125 | 2.62 | 1.24 | 0.250 | 38.47 | 26.65 | 7.52 |
| **210TC** | 7.25 | 8.500 | 0.23 | 9.17 | 0.59 | 1.375 | 3.12 | 1.52 | 0.312 | 38.47 | 26.65 | 7.52 |
| **250TC** | 7.25 | 8.500 | 0.23 | 9.17 | 0.59 | 1.625 | 3.75 | 1.80 | 0.375 | 42.25 | 30.43 | 11.38 |
| **280TC** | 9.00 | 10.500 | 0.23 | 13.78 | 0.59 | 1.875 | 4.38 | 2.03 | 0.500 | 42.25 | 30.43 | 11.38 |
| **320TC** | 11.00 | 12.500 | 0.23 | 13.78 | 0.71 | 2.125 | 5.00 | 2.35 | 0.500 | 41.22 | 29.40 | 10.35 |
| **360TC**1) | 11.00 | 12.500 | 0.16 | 21.65 | 0.71 | 2.375 | 5.62 | 2.65 | 0.625 | 44.14 | 32.32 | 13.27 |




Send Quote Requests to info@automatedpt.com
Call +1(800)985-6929 To Order or Order Online At Nordgearmotors.com

# SK 12382 + Motor





DRIVESYSTEMS



## SK 12382VZ

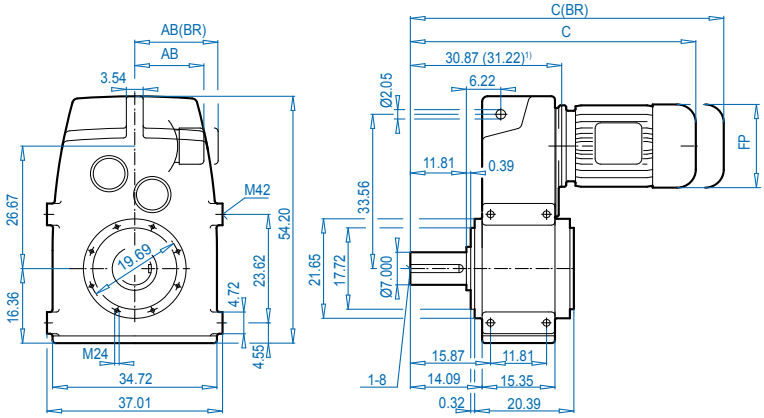


## SK 12382AZSH

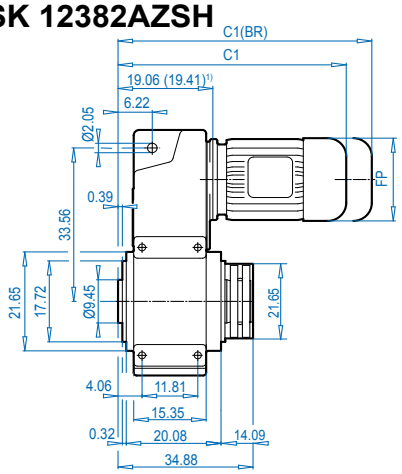


## SK 12382VF

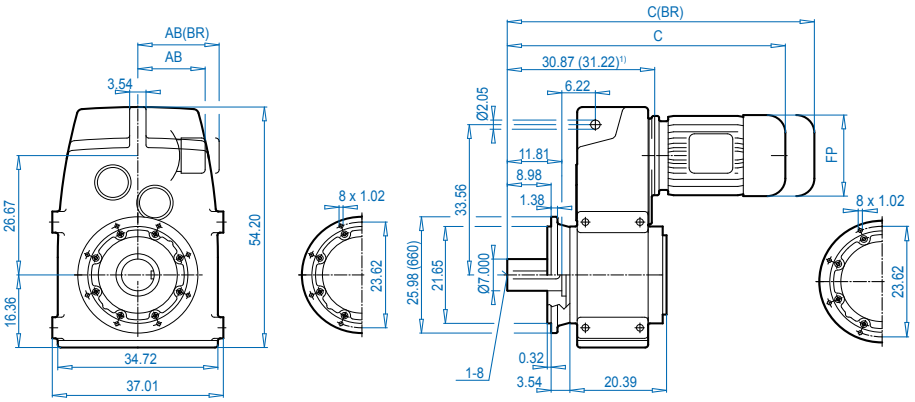


## SK 12382AFSH

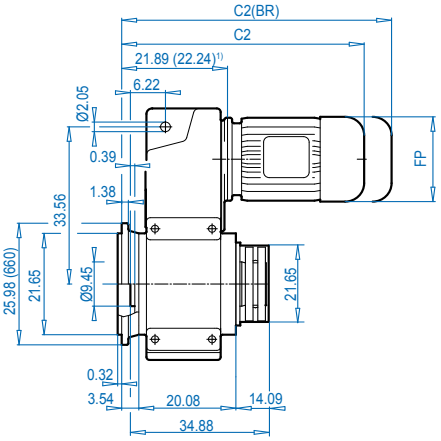


## SK 12382V

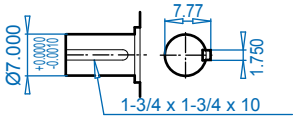


## SK 12382**AZSH** ⇨🕮 391

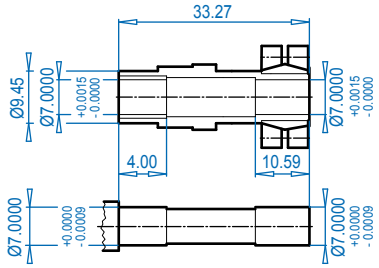


### Motor dimensions

| Standard eff. | 160M/L | | 180MX/LX | | 200L | 225S/M | | | 250M | | 280S | 280M1) | | 315S1) | 315Ma1) | For Other Connection Possibilities please see ⇨🕮 377 & 379 |
|---|---|---|---|---|---|---|---|---|---|---|---|---|---|---|---|---|
| Energy eff. | 160MH | 160LH | | 180MH/LH | 200LH | | 225SH | 225MH | | 250MH | 280SH | | 280MH1) | 315SH1) | 315MHa1) | |
| AB | 8.90 | 8.90 | 8.90 | 10.20 | 12.05 | 12.05 | 12.80 | 12.80 | 15.43 | 15.43 | 17.01 | 17.01 | 17.01 | 20.28 | 20.28 |  |
| AB (BR) | 8.90 | 8.90 | 8.90 | 10.20 | 12.05 | 12.05 | - | - | 15.43 | 15.43 | 17.01 | 17.01 | 17.01 | - | - | |
| C1 | 37.87 | 39.44 | 39.44 | 42.75 | 46.14 | 46.14 | 46.02 | 46.02 | 48.97 | 51.73 | 53.11 | 51.69 | 56.02 | 57.60 | 63.11 | |
| C1 (BR) | 44.44 | 46.18 | 46.18 | 46.88 | 52.71 | 52.71 | - | - | 60.00 | 64.33 | 62.32 | 66.65 | 66.65 | - | - | |
| C2 | 40.71 | 42.28 | 42.28 | 45.59 | 48.98 | 48.98 | 48.86 | 48.86 | 51.81 | 54.57 | 55.95 | 54.53 | 58.86 | 60.44 | 65.95 | |
| C2 (BR) | 47.28 | 49.02 | 49.02 | 49.72 | 55.55 | 55.55 | - | - | 60.08 | 62.84 | 67.17 | 65.16 | 69.49 | - | - | |
| C | 49.69 | 51.26 | 51.26 | 54.57 | 57.96 | 57.96 | 57.84 | 57.84 | 60.79 | 63.55 | 64.93 | 63.51 | 67.84 | 69.42 | 74.93 | |
| C (BR) | 56.26 | 58.00 | 58.00 | 58.70 | 64.53 | 64.53 | - | - | 69.06 | 71.82 | 76.15 | 74.14 | 78.47 | - | - | |
| FP | 12.60 | 12.60 | 12.60 | 14.09 | 15.67 | 15.67 | 17.52 | 17.52 | 19.49 | 19.49 | 22.64 | 21.85 | 21.85 | 25.39 | 25.39 | |

**(BR)** denotes Brakemotor

ALTERNATE SHAFTS SEE PAGES 388 - 393


Send Quote Requests to info@automatedpt.com
Call +1(800)985-6929 To Order or Order Online At Nordgearmotors.com

DRIVESYSTEMS





# SK 12382 + NEMA

## SK 12382VZ

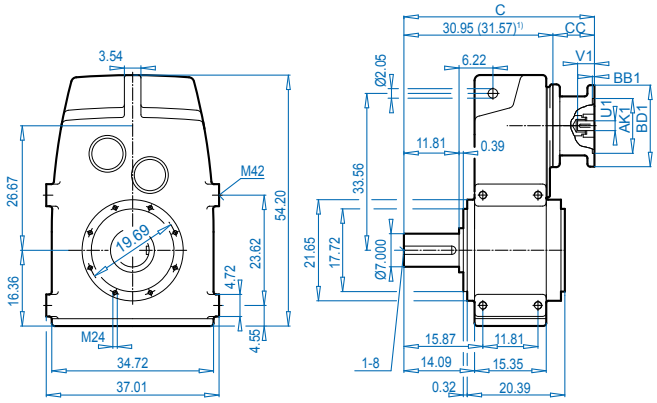


## SK 12382AZSH

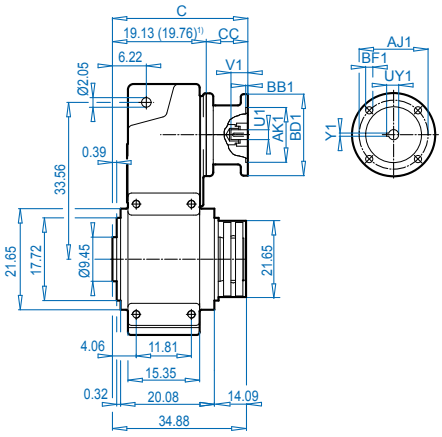


## SK 12382VF

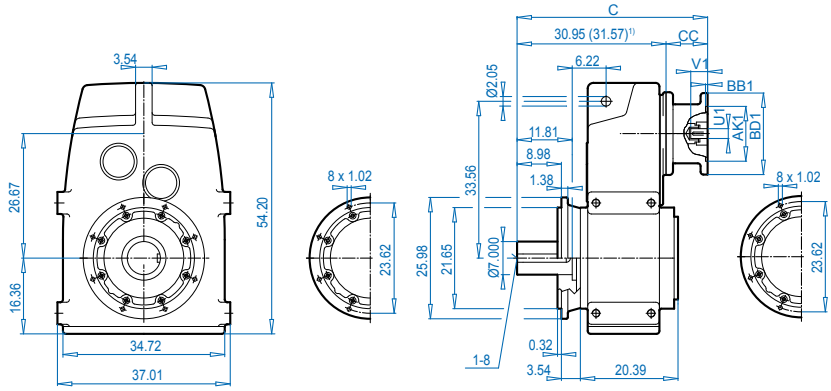


## SK 12382AFSH

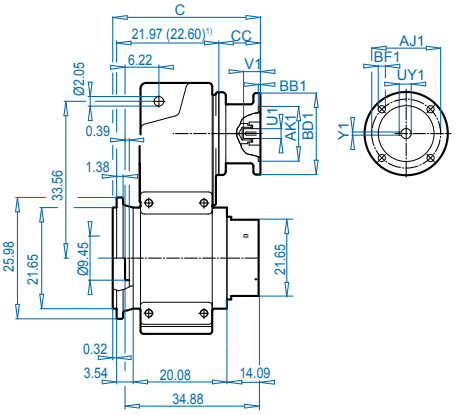


## SK 12382V

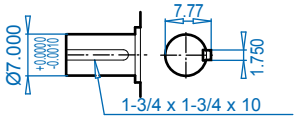


## SK 12382**AZSH** ⇨🕮 391

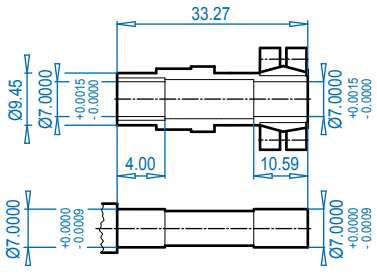


### NEMA Dimensions

| Type | AJ1 | AK1 | BB1 | BD1 | BF1 | U1 | V1 | UY1 | Y1 | C | C1 | CC |
|---|---|---|---|---|---|---|---|---|---|---|---|---|
| **180TC** | 7.25 | 8.500 | 0.23 | 9.17 | 0.59 | 1.125 | 2.62 | 1.24 | 0.250 | 38.47 | 26.65 | 7.52 |
| **210TC** | 7.25 | 8.500 | 0.23 | 9.17 | 0.59 | 1.375 | 3.12 | 1.52 | 0.312 | 38.47 | 26.65 | 7.52 |
| **250TC** | 7.25 | 8.500 | 0.23 | 9.17 | 0.59 | 1.625 | 3.75 | 1.80 | 0.375 | 42.25 | 30.43 | 11.38 |
| **280TC** | 9.00 | 10.500 | 0.23 | 13.78 | 0.59 | 1.875 | 4.38 | 2.03 | 0.500 | 42.25 | 30.43 | 11.38 |
| **320TC** | 11.00 | 12.500 | 0.23 | 13.78 | 0.71 | 2.125 | 5.00 | 2.35 | 0.500 | 41.22 | 29.40 | 10.35 |
| **360TC**1) | 11.00 | 12.500 | 0.16 | 21.65 | 0.71 | 2.375 | 5.62 | 2.65 | 0.625 | 44.14 | 32.32 | 13.27 |



ALTERNATE SHAFTS SEE PAGES 388 - 393


Send Quote Requests to info@automatedpt.com
Call +1(800)985-6929 To Order or Order Online At Nordgearmotors.com

# SK 1282/02 - SK 8382/32



DRIVESYSTEMS

DIMENSIONS
Dimensions in Inches

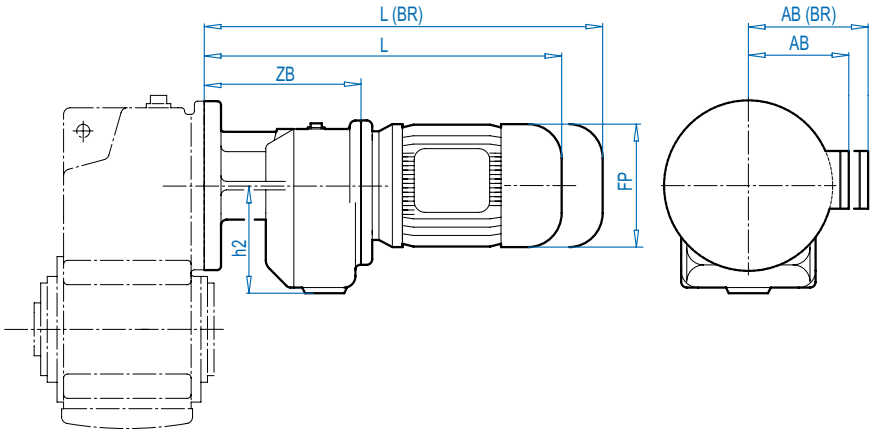


## Motor dimensions

| Type | SK 1282/02 | | SK 2282/02 | | SK 3282/12 | | | | For Other Connection Possibilities please see ⇨🕮 376 & 378 |
|---|---|---|---|---|---|---|---|---|---|
| Standard eff. | 63S/L | 71S/L | 63S/L | 71S/L | 63S/L | 80S/L | 90S/L | | |
| Energy eff. | | | | | | 80LH | 90SH/LH | | |
| AB | 4.53 | 4.88 | 4.53 | 4.88 | 4.53 | 5.59 | 5.79 | |  |
| AB (BR) | 4.84 | 5.24 | 4.84 | 5.24 | 4.84 | 5.63 | 5.83 | | |
| L | 13.31 | 14.88 | 13.94 | 15.51 | 14.45 | 17.01 | 19.53 | | |
| L (BR) | 15.51 | 17.16 | 16.14 | 17.79 | 16.65 | 18.62 | 21.57 | | |
| ZB | 5.59 | | 6.22 | | | 6.73 | | | |
| h2 | 3.5 | | 3.5 | | | 4.17 | | | |
| FP | 5.12 | 5.71 | 5.12 | 5.71 | 5.12 | 6.50 | 7.20 | | |
| | SK 1282 ⇨🕮 330 | | SK 2282 ⇨🕮 332 | | SK 3282 ⇨🕮 336 | | | | |

| Type | SK 4282/12, SK 5282/12 | | | SK 6382/22 | | | | | For Other Connection Possibilities please see ⇨🕮 376 & 378 |
|---|---|---|---|---|---|---|---|---|---|
| Standard eff. | 63S/L | 71S/L | 80S/L | 71L | 80S/L | 90S/L | 100L | | |
| Energy eff. | | | 80LH | | 80LH | 90SH/LH | 100LH | 112MH | |
| AB | 4.53 | 4.88 | 5.59 | 4.88 | 5.59 | 5.79 | 6.65 | 7.05 |  |
| AB (BR) | 4.84 | 5.24 | 5.63 | 5.24 | 5.63 | 5.83 | 6.26 | 6.69 | |
| L | 14.61 | 16.18 | 17.17 | 16.11 | 17.09 | 18.70 | 19.88 | 20.79 | |
| L (BR) | 16.81 | 18.46 | 19.69 | 18.39 | 19.61 | 21.65 | 23.47 | 24.45 | |
| ZB | 6.89 | | | 7.05 | | | | | |
| h2 | 4.17 | | | 4.92 | | | | | |
| FP | 5.12 | 5.71 | 6.50 | 5.71 | 6.50 | 7.20 | 7.91 | 8.98 | |
| | SK 4282 ⇨🕮 340, SK 5282 ⇨🕮 344 | | | SK 6382 ⇨🕮 350 | | | | | |

| Type | SK7382/22 | | | | SK6382/32 | SK7382/32 | SK8382/32 | | | | For Other Connection Possibilities please see ⇨🕮 376 - 379 |
|---|---|---|---|---|---|---|---|---|---|---|---|
| Standard eff. | 80S/L | 90S/L | 100L | | W/NEMA | 132S | 80S/L | 90S/L | 100L | | |
| Energy eff. | 80LH | 90SH/LH | 100LH | 112MH | | 132SH | 80LH | 90SH/LH | 100LH | 112MH | |
| AB | 5.59 | 5.79 | 6.65 | 7.05 | - | 8.03 | 5.59 | 5.79 | 6.65 | 7.05 |  |
| AB (BR) | 5.63 | 5.83 | 6.26 | 6.69 | - | 7.72 | 5.63 | 5.83 | 6.26 | 6.69 | |
| L | 17.09 | 18.70 | 19.88 | 20.79 | - | 25.75 | 18.66 | 20.27 | 21.45 | 22.36 | |
| L (BR) | 19.61 | 21.65 | 23.47 | 24.45 | - | 29.96 | 21.18 | 23.22 | 25.04 | 26.02 | |
| ZB | 7.05 | | | | 8.62 | 8.62 | 8.62 | | | | |
| h2 | 4.92 | | | | 6.10 | 6.10 | 6.10 | | | | |
| FP | 6.50 | 7.20 | 7.91 | 8.98 | - | 10.47 | 6.50 | 7.20 | 7.91 | 8.98 | |
| | SK 7382 ⇨🕮 354 | | | | SK 6382 ⇨🕮 350 | SK 7382 ⇨🕮 354 | SK 8382 ⇨🕮 358 | | | | |

**(BR)** denotes Brakemotor


Send Quote Requests to info@automatedpt.com
Call +1(800)985-6929 To Order or Order Online At Nordgearmotors.com

DRIVESYSTEMS





# SK 8382/42 - SK 11382/52

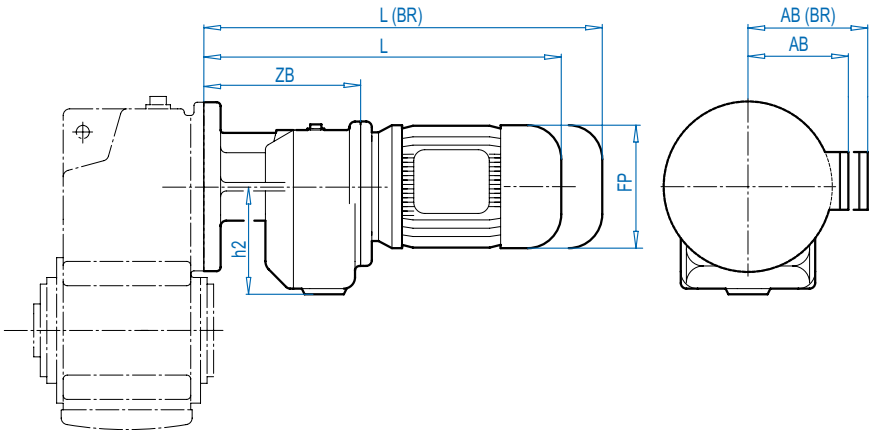


DIMENSIONS
Dimensions in Inches

**Motor dimensions**

| Type | SK 8382/42 , SK 9382/42 | | | | | | | For Other Connection Possibilities please see ⇨🕮 377 & 379 |
|---|---|---|---|---|---|---|---|---|
| Standard eff. | 90S/L | 100L | | 132S/M | | | | |
| Energy eff. | 90LH | 100LH | 112MH | 132SH/SM | | | | |
| AB | 5.79 | 6.65 | 7.05 | 8.03 | | | |  |
| AB (BR) | 5.83 | 6.26 | 6.69 | 7.72 | | | | |
| L | 21.12 | 22.30 | 23.20 | 26.59 | | | | |
| L (BR) | 24.07 | 25.89 | 26.86 | 30.80 | | | | |
| ZB | 10.25 | | | | | | | |
| h2 | 6.89 | | | | | | | |
| FP | 7.20 | 7.91 | 8.98 | 10.47 | | | | |
| | SK 8382 ⇨🕮 358, SK 9382 ⇨🕮 362 | | | | | | | |

| Type | SK 9382/52 , SK 10382/52 , SK 11382/52 | | | | | | | For Other Connection Possibilities please see ⇨🕮 377 & 379 |
|---|---|---|---|---|---|---|---|---|
| Standard eff. | 100L | | 132S/M | 160M/L | | 180MX | | |
| Energy eff. | 100LH | 112MH | 132SH/MH | 160MH | 160LH | | 180MH | |
| AB | 6.65 | 7.05 | 8.03 | 8.90 | 8.90 | 8.90 | 10.20 |  |
| AB (BR) | 6.26 | 6.69 | 7.72 | 8.90 | 8.90 | 8.90 | 10.20 | |
| L | 23.86 | 24.76 | 28.15 | 31.18 | 36.30 | 36.30 | 49.21 | |
| L (BR) | 27.45 | 28.42 | 32.36 | 38.23 | 40.43 | 40.43 | 53.34 | |
| ZB | 11.81 | | | | | | | |
| h2 | 8.35 | | | | | | | |
| FP | 7.91 | 8.98 | 10.47 | 12.60 | 12.60 | 12.60 | 14.09 | |
| | SK 9382 ⇨🕮 362, SK 10382 ⇨🕮 366, SK 11382 ⇨🕮 370 | | | | | | | |

**(BR)** denotes Brakemotor


G1000 Subject to Change Without Notice
Send Quote Requests to info@automatedpt.com
Call +1(800)985-6929 To Order or Order Online At Nordgearmotors.com

# Solid Input Shaft
# Type - W



DRIVESYSTEMS

DIMENSIONS
Dimensions in Inches

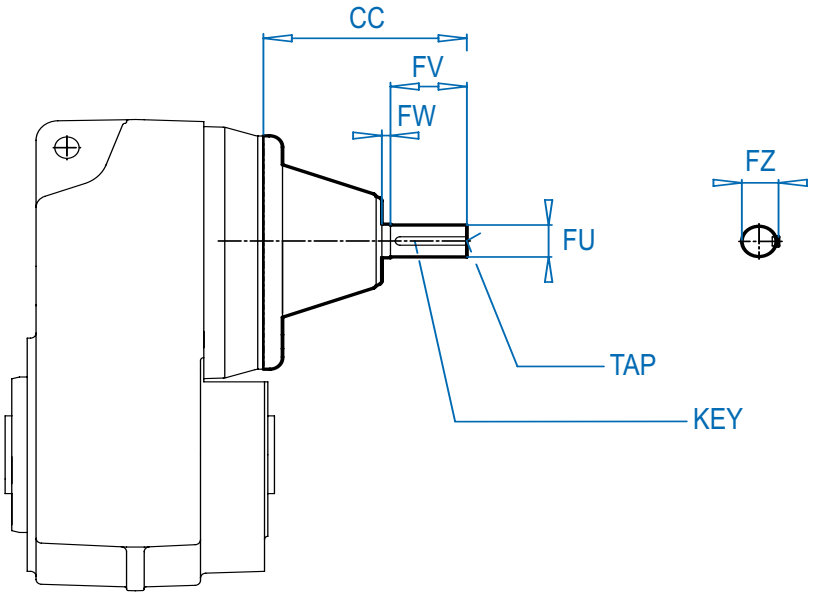


| Unit | CC | FW | FV | FU | FZ | TAP | KEY | Unit Dimensions |
|---|---|---|---|---|---|---|---|---|
| **SK 0182NB** | 3.85 | 0.16 | 1.13 | 0.500 +0.0000 -0.0005 | 0.56 | 1/4-20 | 1/8 x 1/8 x 7/8 | ⇨🕮 312 |
| **SK 0282NB** | 3.85 | 0.16 | 1.13 | 0.500 +0.0000 -0.0005 | 0.56 | 1/4-20 | 1/8 x 1/8 x 7/8 | ⇨🕮 318 |
| **SK 1382NB** | 4.29 | 0.16 | 1.57 | 0.625 +0.0000 -0.0005 | 0.70 | 1/4-20 | 3/16 x 3/16 x 1 1/4 | ⇨🕮 324 |
| **SK 1282** | 4.73 | 0.28 | 1.50 | 0.625 +0.0000 -0.0005 | 0.70 | 1/4-20 | 3/16 x 3/16 x 1 1/4 | ⇨🕮 362 |
| **SK 1282/02** | 4.73 | 0.28 | 1.50 | 0.625 +0.0000 -0.0005 | 0.70 | 1/4-20 | 3/16 x 3/16 x 1 1/4 | ⇨🕮 374 |
| **SK 2282** | 6.80 | 0.31 | 2.00 | 0.875 +0.0000 -0.0005 | 0.96 | 1/4-20 | 3/16 x 3/16 x 1 5/8 | ⇨🕮 332 |
| **SK 2282/02** | 4.73 | 0.28 | 1.50 | 0.625 +0.0000 -0.0005 | 0.70 | 1/4-20 | 3/16 x 3/16 x 1 1/4 | ⇨🕮 374 |
| **SK 2382** | 4.73 | 0.28 | 1.50 | 0.625 +0.0000 -0.0005 | 0.70 | 1/4-20 | 3/16 x 3/16 x 1 1/4 | ⇨🕮 334 |
| **SK 3282** | 6.80 | 0.31 | 2.00 | 0.875 +0.0000 -0.0005 | 0.96 | 1/4-20 | 3/16 x 3/16 x 1 5/8 | ⇨🕮 336 |
| **SK 3282/12** | 4.73 | 0.28 | 1.50 | 0.625 +0.0000 -0.0005 | 0.70 | 1/4-20 | 3/16 x 3/16 x 1 1/4 | ⇨🕮 374 |
| **SK 3382** | 4.73 | 0.28 | 1.50 | 0.625 +0.0000 -0.0005 | 0.70 | 1/4-20 | 3/16 x 3/16 x 1 1/4 | ⇨🕮 338 |
| **SK 4282** | 8.36 | 0.31 | 3.12 | 1.500 +0.0000 -0.0005 | 1.66 | 5/8-11 | 3/8 x 3/8 x 2 1/2 | ⇨🕮 340 |
| **SK 4282/12** | 4.73 | 0.28 | 1.50 | 0.625 +0.0000 -0.0005 | 0.70 | 1/4-20 | 3/16 x 3/16 x 1 1/4 | ⇨🕮 374 |
| **SK 4382** | 6.80 | 0.31 | 2.00 | 0.875 +0.0000 -0.0005 | 0.96 | 1/4-20 | 3/16 x 3/16 x 1 5/8 | ⇨🕮 342 |
| **SK 5282** | 8.36 | 0.31 | 3.12 | 1.500 +0.0000 -0.0005 | 1.66 | 5/8-11 | 3/8 x 3/8 x 2 1/2 | ⇨🕮 344 |
| **SK 5282/12** | 4.73 | 0.28 | 1.50 | 0.625 +0.0000 -0.0005 | 0.70 | 1/4-20 | 3/16 x 3/16 x 1 1/4 | ⇨🕮 374 |
| **SK 5382** | 6.80 | 0.31 | 2.00 | 0.875 +0.0000 -0.0005 | 0.96 | 1/4-20 | 3/16 x 3/16 x 1 5/8 | ⇨🕮 346 |
| **SK 6282** | 11.38 | 0.31 | 4.38 | 1.625 +0.0000 -0.0005 | 1.79 | 5/8-11 | 3/8 x 3/8 x 3 5/8 | ⇨🕮 348 |
| **SK 6382** | 8.36 | 0.31 | 3.12 | 1.500 +0.0000 -0.0005 | 1.66 | 5/8-11 | 3/8 x 3/8 x 2 1/2 | ⇨🕮 350 |
| **SK 6382 W VL** | 11.38 | 0.31 | 4.38 | 1.625 +0.0000 -0.0005 | 1.79 | 5/8-11 | 3/8 x 3/8 x 3 5/8 | ⇨🕮 350 |
| **SK 6382/22** | 6.80 | 0.31 | 2.00 | 0.875 +0.0000 -0.0005 | 0.96 | 1/4-20 | 3/16 x 3/16 x 1 5/8 | ⇨🕮 374 |
| **SK 6382/32** | 6.80 | 0.31 | 2.00 | 0.875 +0.0000 -0.0005 | 0.96 | 1/4-20 | 3/16 x 3/16 x 1 5/8 | ⇨🕮 374 |


Send Quote Requests to info@automatedpt.com
Call +1(800)985-6929 To Order or Order Online At Nordgearmotors.com

DRIVESYSTEMS



# Solid Input Shaft
# Type - W



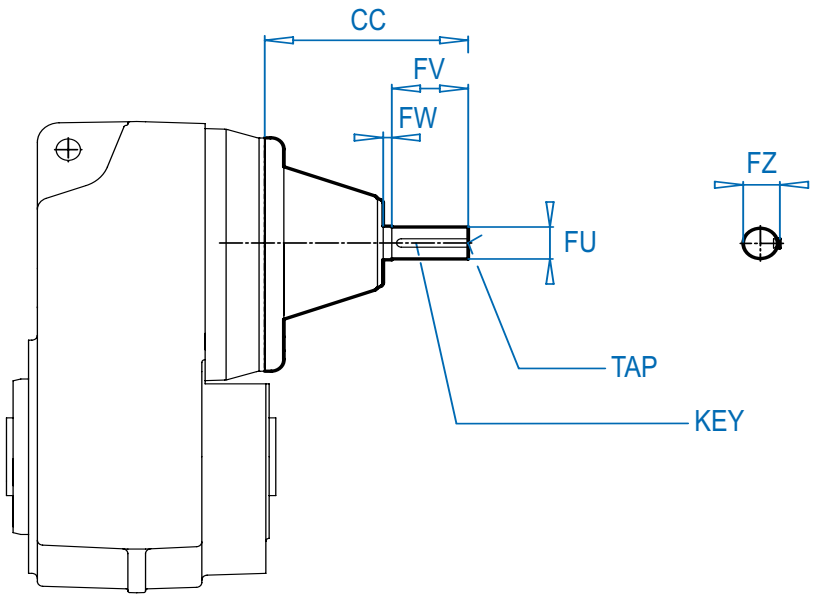


| Unit | CC | FW | FV | FU | FZ | TAP | KEY | Unit Dimensions |
|---|---|---|---|---|---|---|---|---|
| **SK 7282** | 11.38 | 0.31 | 4.38 | 1.625 +0.0000 -0.0005 | 1.79 | 5/8-11 | 3/8 x 3/8 x 3 5/8 | ⇨🕮 352 |
| **SK 7382** | 11.38 | 0.31 | 4.38 | 1.625 +0.0000 -0.0005 | 1.79 | 5/8-11 | 3/8 x 3/8 x 3 5/8 | ⇨🕮 354 |
| **SK 7382/22** | 6.80 | 0.31 | 2.00 | 0.875 +0.0000 -0.0005 | 0.96 | 1/4-20 | 3/16 x 3/16 x 1 5/8 | ⇨🕮 374 |
| **SK 7382/32** | 6.80 | 0.31 | 2.00 | 0.875 +0.0000 -0.0005 | 0.96 | 1/4-20 | 3/16 x 3/16 x 1 5/8 | ⇨🕮 374 |
| **SK 8282** | 15.62 | 0.47 | 5.50 | 2.500 +0.0000 -0.0005 | 2.77 | 3/4-10 | 5/8 x 5/8 x 4 5/8 | ⇨🕮 356 |
| **SK 8382** | 11.38 | 0.31 | 4.38 | 1.625 +0.0000 -0.0005 | 1.79 | 5/8-11 | 3/8 x 3/8 x 3 5/8 | ⇨🕮 358 |
| **SK 8382 W VL** | 15.62 | 0.47 | 5.50 | 2.500 +0.0000 -0.0005 | 2.77 | 3/4-10 | 5/8 x 5/8 x 4 5/8 | ⇨🕮 358 |
| **SK 8382/32** | 6.80 | 0.31 | 2.00 | 0.875 +0.0000 -0.0010 | 0.96 | 1/4-20 | 3/16 x 3/16 x 1 5/8 | ⇨🕮 374 |
| **SK 8382/42** | 8.36 | 0.31 | 3.12 | 1.500 +0.0000 -0.0005 | 1.66 | 5/8-11 | 3/8 x 3/8 x 2 1/2 | ⇨🕮 375 |
| **SK 9282** | 15.62 | 0.47 | 5.50 | 2.500 +0.0000 -0.0010 | 2.77 | 3/4-10 | 5/8 x 5/8 x 4 5/8 | ⇨🕮 360 |
| **SK 9382** | 11.38 | 0.31 | 4.38 | 1.625 +0.0000 -0.0005 | 1.79 | 5/8-11 | 3/8 x 3/8 x 3 5/8 | ⇨🕮 362 |
| **SK 9382 W VL** | 15.62 | 0.47 | 5.50 | 2.500 +0.0000 -0.0010 | 2.77 | 3/4-10 | 5/8 x 5/8 x 4 5/8 | ⇨🕮 362 |
| **SK 9382/42** | 8.36 | 0.31 | 3.12 | 1.500 +0.0000 -0.0005 | 1.66 | 5/8-11 | 3/8 x 3/8 x 2 1/2 | ⇨🕮 375 |
| **SK 9382/52** | 8.36 | 0.31 | 3.12 | 1.500 +0.0000 -0.0005 | 1.66 | 5/8-11 | 3/8 x 3/8 x 2 1/2 | ⇨🕮 375 |
| **SK 10282** | 9.96 | 0.53 | 5.51 | 2.750 +0.0000 -0.0010 | 3.03 | 3/4-10 | 5/8 x 5/8 x 4 5/8 | ⇨🕮 364 |
| **SK 10382** | 9.96 | 0.53 | 5.51 | 2.750 +0.0000 -0.0010 | 3.03 | 3/4-10 | 5/8 x 5/8 x 4 5/8 | ⇨🕮 366 |
| **SK 10382/52** | 8.36 | 0.31 | 3.12 | 1.500 +0.0000 -0.0005 | 1.66 | 5/8-11 | 3/8 x 3/8 x 2 1/2 | ⇨🕮 375 |
| **SK 11282** | 9.96 | 0.53 | 5.51 | 2.750 +0.0000 -0.0010 | 3.03 | 3/4-10 | 5/8 x 5/8 x 4 5/8 | ⇨🕮 368 |
| **SK 11382** | 9.96 | 0.53 | 5.51 | 2.750 +0.0000 -0.0010 | 3.03 | 3/4-10 | 5/8 x 5/8 x 4 5/8 | ⇨🕮 370 |
| **SK 11382/52** | 8.36 | 0.31 | 3.12 | 1.500 +0.0000 -0.0005 | 1.66 | 5/8-11 | 3/8 x 3/8 x 2 1/2 | ⇨🕮 375 |
| **SK 12382** | 9.96 | 0.53 | 5.51 | 2.750 +0.0000 -0.0010 | 3.03 | 3/4-10 | 5/8 x 5/8 x 4 5/8 | ⇨🕮 372 |


Send Quote Requests to info@automatedpt.com
Call +1(800)985-6929 To Order or Order Online At Nordgearmotors.com

DIMENSIONS
Dimensions in mm

# IEC Inputs



DRIVESYSTEMS

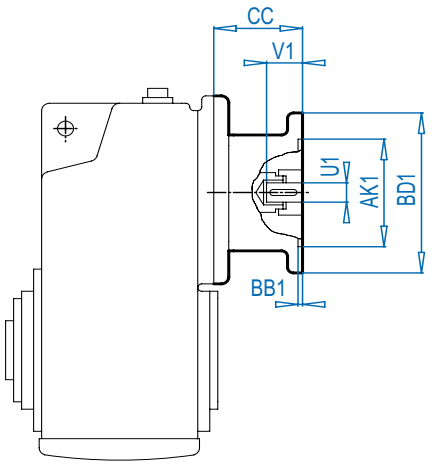


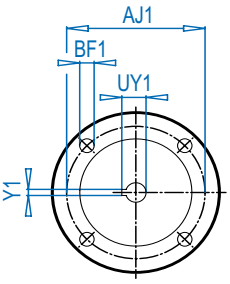


Figure 1
4 Bolt Flange

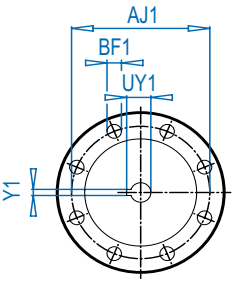


Figure 2
8 Bolt Flange
(For IEC 225-315)

**IEC Dimensions (mm)**

| Input | AJ1 | AK1 | BB1 | BD1 | BF1 | U1 | V1 | UY1 | Y1 | Flange |
|---|---|---|---|---|---|---|---|---|---|---|
| IEC 63 | 115 | 95 | 3.5 | 140 | M8 | 11 | 23 | 12.8 | 4 | Fig. 1 |
| IEC 71 | 130 | 110 | 4.0 | 160 | M8 | 14 | 30 | 16.3 | 5 | Fig. 1 |
| IEC 80 | 165 | 130 | 4.0 | 200 | M10 | 19 | 40 | 21.8 | 6 | Fig. 1 |
| IEC 90 | 165 | 130 | 4.0 | 200 | M10 | 24 | 50 | 27.3 | 8 | Fig. 1 |
| IEC 100 | 215 | 180 | 5.0 | 250 | M12 | 28 | 60 | 31.3 | 8 | Fig. 1 |
| IEC 112 | 215 | 180 | 5.0 | 250 | M12 | 28 | 60 | 31.3 | 8 | Fig. 1 |
| IEC 132 | 265 | 230 | 5.0 | 300 | M12 | 38 | 80 | 41.3 | 10 | Fig. 1 |
| IEC 160 | 300 | 250 | 6.0 | 350 | M16 | 42 | 110 | 45.3 | 12 | Fig. 1 |
| IEC 180 | 300 | 250 | 6.0 | 350 | M16 | 48 | 110 | 51.8 | 14 | Fig. 1 |
| IEC 200 | 350 | 300 | 6.0 | 400 | M16 | 55 | 110 | 59.3 | 16 | Fig. 1 |
| IEC 225 | 400 | 350 | 6.0 | 450 | M16 | 60 | 140 | 64.4 | 18 | Fig. 2 |
| IEC 250 | 500 | 450 | 6.0 | 550 | M16 | 65 | 140 | 69.4 | 18 | Fig. 2 |
| IEC 280 | 500 | 450 | 6.0 | 550 | M16 | 75 | 140 | 79.9 | 20 | Fig. 2 |
| IEC 315 | 600 | 550 | 7.0 | 660 | M20 | 80 | 170 | 85.4 | 22 | Fig. 2 |

**CC Dimensions**

| Unit | IEC63 | IEC 71 | IEC 80 | IEC 90 | IEC 100 | IEC 112 | IEC 132 | IEC 160 | IEC 180 | IEC 200 | IEC 225 | IEC 250 | IEC 280 | IEC 315 |
|---|---|---|---|---|---|---|---|---|---|---|---|---|---|---|
| SK 0182NB | 3.35 | 3.35 | 4.06 | 4.06 | 4.96 | 4.96 | – | – | – | – | – | – | – | – |
| SK 0282NB | 3.35 | 3.35 | 4.06 | 4.06 | 4.96 | 4.96 | – | – | – | – | – | – | – | – |
| SK 1382NB | 3.35 | 3.35 | 4.06 | 4.06 | 4.96 | 4.96 | – | – | – | – | – | – | – | – |
| SK 1282 | 3.35 | 3.50 | 4.13 | 4.13 | 5.12 | 5.12 | – | – | – | – | – | – | – | – |
| SK 1282/02 | 3.35 | 3.50 | 4.13 | 4.13 | 5.12 | 5.12 | – | – | – | – | – | – | – | – |
| SK 2282 | – | 3.46 | 4.25 | 4.25 | 4.92 | 4.92 | 6.14 | – | – | – | – | – | – | – |
| SK 2282/02 | 3.35 | 3.50 | 4.13 | 4.13 | 5.12 | 5.12 | – | – | – | – | – | – | – | – |
| SK 2382 | 3.35 | 3.50 | 4.13 | 4.13 | 5.12 | 5.12 | – | – | – | – | – | – | – | – |
| SK 3282 | – | 3.46 | 4.25 | 4.25 | 4.92 | 4.92 | 6.14 | – | – | – | – | – | – | – |
| SK 3282/12 | 3.35 | 3.50 | 4.13 | 4.13 | 5.12 | 5.12 | – | – | – | – | – | – | – | – |
| SK 3382 | 3.35 | 3.50 | 4.13 | 4.13 | 5.12 | 5.12 | – | – | – | – | – | – | – | – |
| SK 4282 | – | – | – | 4.29 | 5.24 | 5.24 | 7.48 | 7.64 | 7.64 | – | – | – | – | – |
| SK 4282/12 | 3.35 | 3.50 | 4.13 | 4.13 | 5.12 | 5.12 | – | – | – | – | – | – | – | – |
| SK 4382 | – | 3.46 | 4.25 | 4.25 | 4.92 | 4.92 | 6.14 | – | – | – | – | – | – | – |
| SK 5282 | – | – | – | 4.29 | 5.24 | 5.24 | 7.48 | 7.64 | 7.64 | – | – | – | – | – |
| SK 5282/12 | 3.35 | 3.50 | 4.13 | 4.13 | 5.12 | 5.12 | – | – | – | – | – | – | – | – |
| SK 5382 | – | 3.46 | 4.25 | 4.25 | 4.92 | 4.92 | 6.14 | – | – | – | – | – | – | – |
| SK 6282 | – | – | – | – | 5.00 | 5.00 | 6.97 | 10.47 | 10.47 | 9.02 | 11.93 | 11.93 | 11.93 | – |
| SK 6382 | – | – | – | 4.29 | 5.24 | 5.24 | 7.48 | 7.64 | 7.64 | – | – | – | – | – |
| SK 6382/22 | – | 3.46 | 4.25 | 4.25 | 4.92 | 4.92 | 6.14 | – | – | – | – | – | – | – |
| SK 6382/32 | – | 3.46 | 4.25 | 4.25 | 4.92 | 4.92 | 6.14 | – | – | – | – | – | – | – |


Send Quote Requests to info@automatedpt.com
Call +1(800)985-6929 To Order or Order Online At Nordgearmotors.com

DRIVESYSTEMS

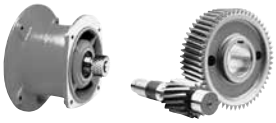

# IEC Inputs

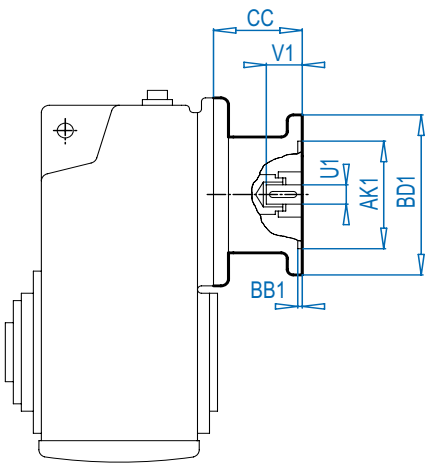


Figure 1
4 Bolt Flange

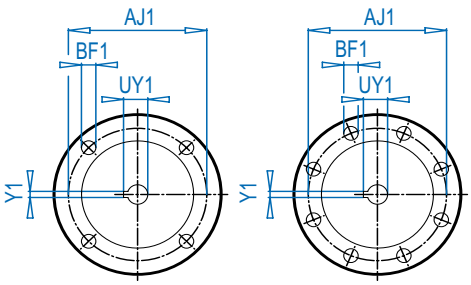


Figure 2
8 Bolt Flange
(For IEC 225-315)



**IEC Dimensions (mm)**

| Input | AJ1 | AK1 | BB1 | BD1 | BF1 | U1 | V1 | UY1 | Y1 | Flange |
|---|---|---|---|---|---|---|---|---|---|---|
| IEC 63 | 115 | 95 | 3.5 | 140 | M8 | 11 | 23 | 12.8 | 4 | Fig. 1 |
| IEC 71 | 130 | 110 | 4.0 | 160 | M8 | 14 | 30 | 16.3 | 5 | Fig. 1 |
| IEC 80 | 165 | 130 | 4.0 | 200 | M10 | 19 | 40 | 21.8 | 6 | Fig. 1 |
| IEC 90 | 165 | 130 | 4.0 | 200 | M10 | 24 | 50 | 27.3 | 8 | Fig. 1 |
| IEC 100 | 215 | 180 | 5.0 | 250 | M12 | 28 | 60 | 31.3 | 8 | Fig. 1 |
| IEC 112 | 215 | 180 | 5.0 | 250 | M12 | 28 | 60 | 31.3 | 8 | Fig. 1 |
| IEC 132 | 265 | 230 | 5.0 | 300 | M12 | 38 | 80 | 41.3 | 10 | Fig. 1 |
| IEC 160 | 300 | 250 | 6.0 | 350 | M16 | 42 | 110 | 45.3 | 12 | Fig. 1 |
| IEC 180 | 300 | 250 | 6.0 | 350 | M16 | 48 | 110 | 51.8 | 14 | Fig. 1 |
| IEC 200 | 350 | 300 | 6.0 | 400 | M16 | 55 | 110 | 59.3 | 16 | Fig. 1 |
| IEC 225 | 400 | 350 | 6.0 | 450 | M16 | 60 | 140 | 64.4 | 18 | Fig. 2 |
| IEC 250 | 500 | 450 | 6.0 | 550 | M16 | 65 | 140 | 69.4 | 18 | Fig. 2 |
| IEC 280 | 500 | 450 | 6.0 | 550 | M16 | 75 | 140 | 79.9 | 20 | Fig. 2 |
| IEC 315 | 600 | 550 | 7.0 | 660 | M20 | 80 | 170 | 85.4 | 22 | Fig. 2 |

**CC Dimensions**

| Unit | IEC63 | IEC 71 | IEC 80 | IEC 90 | IEC 100 | IEC 112 | IEC 132 | IEC 160 | IEC 180 | IEC 200 | IEC 225 | IEC 250 | IEC 280 | IEC 315 |
|---|---|---|---|---|---|---|---|---|---|---|---|---|---|---|
| SK 7282 | – | – | – | – | 5.00 | 5.00 | 6.97 | 10.47 | 10.47 | 9.02 | 11.93 | 11.93 | 11.93 | – |
| SK 7382 | – | – | – | – | 5.00 | 5.00 | 6.97 | 10.47 | 10.47 | 9.02 | 11.93 | 11.93 | 11.93 | – |
| SK 7382/22 | – | 3.46 | 4.25 | 4.25 | 4.92 | 4.92 | 6.14 | – | – | – | – | – | – | – |
| SK 7382/32 | – | 3.46 | 4.25 | 4.25 | 4.92 | 4.92 | 6.14 | – | – | – | – | – | – | – |
| SK 8282 | – | – | – | – | – | – | 6.97 | 10.47 | 10.47 | 9.02 | 11.93 | 11.93 | 11.93 | 15.04 |
| SK 8382 | – | – | – | – | 5.00 | 5.00 | 6.97 | 10.47 | 10.47 | 9.02 | 11.93 | 11.93 | 11.93 | – |
| SK 8382/32 | – | 3.46 | 4.25 | 4.25 | 4.92 | 4.92 | 6.14 | – | – | – | – | – | – | – |
| SK 8382/42 | – | – | – | 4.29 | 5.24 | 5.24 | 7.48 | 7.64 | 7.64 | – | – | – | – | – |
| SK 9282 | – | – | – | – | – | – | 6.97 | 10.47 | 10.47 | 9.02 | 11.93 | 11.93 | 11.93 | 15.04 |
| SK 9382 | – | – | – | – | 5.00 | 5.00 | 6.97 | 10.47 | 10.47 | 9.02 | 11.93 | 11.93 | 11.93 | – |
| SK 9382/42 | – | – | – | 4.29 | 5.24 | 5.24 | 7.48 | 7.64 | 7.64 | – | – | – | – | – |
| SK 9382/52 | – | – | – | 4.29 | 5.24 | 5.24 | 7.48 | 7.64 | 7.64 | – | – | – | – | – |
| SK 10282 | – | – | – | – | – | – | – | 10.47 | 10.47 | 9.02 | 11.93 | 11.93 | 11.93 | 15 |
| SK 10382 | – | – | – | – | – | – | – | 10.47 | 10.47 | 9.02 | 11.93 | 11.93 | 11.93 | 15 |
| SK 10382/52 | – | – | – | 4.29 | 5.24 | 5.24 | 7.48 | 7.64 | 7.64 | – | – | – | – | – |
| SK 11282 | – | – | – | – | – | – | – | 10.47 | 10.47 | 9.02 | 11.93 | 11.93 | 11.93 | 15 |
| SK 11382 | – | – | – | – | – | – | – | 10.47 | 10.47 | 9.02 | 11.93 | 11.93 | 11.93 | 15 |
| SK 11382/52 | – | – | – | 4.29 | 5.24 | 5.24 | 7.48 | 7.64 | 7.64 | – | – | – | – | – |
| SK 12382 | – | – | – | – | – | – | – | 10.47 | 10.47 | 9.02 | 11.93 | 11.93 | 11.93 | 15 |


Send Quote Requests to info@automatedpt.com
Call +1(800)985-6929 To Order or Order Online At Nordgearmotors.com

# B14 Flange Design Option Z





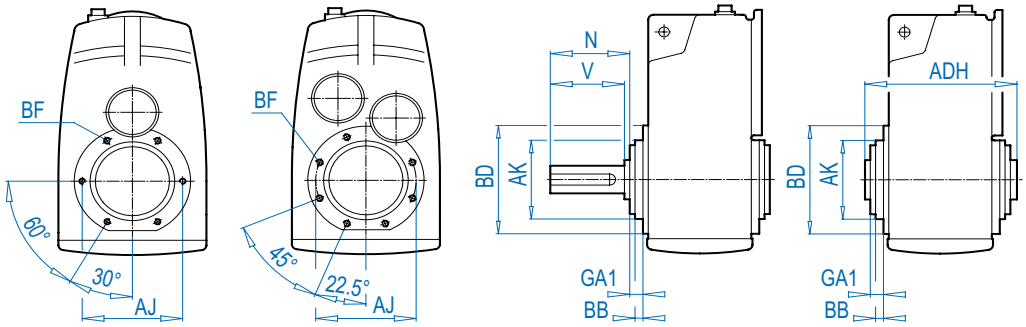


SK 1282 - SK 5382 SK 6282 - SK 8382

**Type** **Mounting dimensions flange B14** **Shaft dimensions**

| | BD | AK | GA1 | AJ | BB | BF(mm) | ADH | V | N |
|---|---|---|---|---|---|---|---|---|---|
| **SK 0182 NB .Z**<br>**SK 0282 NB .Z**<br>**SK 1382 NB .Z** | ⇨📖 316<br>⇨📖 322<br>⇨📖 328 | | | | | | | | |
| **SK 1282 .Z** | 5.51 | 3.740 | 0.51 | 4.53 | 0.24 | M8 x 13 | 4.80 | 2.75 | 2.90 |
| **SK 2282 .Z**<br>**SK 2382 .Z** | 6.30 | 4.331 | 0.47 | 5.12 | 0.20 | M8 x 13 | 5.47 | 2.75 | 2.95 |
| **SK 3282 .Z**<br>**SK 3382 .Z** | 7.87 | 5.118 | 0.28 | 6.50 | 0.28 | M10 x 16 | 6.85 | 3.50 | 3.74 |
| **SK 4282 .Z**<br>**SK 4382 .Z** | 9.06 | 6.299 | 0.43 | 7.64 | 0.20 | M12 x 20 | 7.68 | 4.00 | 4.28 |
| **SK 5282 .Z**<br>**SK 5382 .Z** | 9.84 | 7.087 | 0.35 | 8.46 | 0.20 | M12 x 20 | 9.06 | 5.00 | 5.30 |
| **SK 6282 .Z**<br>**SK 6382 .Z** | 11.81 | 9.055 | 0.43 | 10.43 | 0.16 | M12 x 20 | 11.42 | 5.50 | 5.78 |
| **SK 7282 .Z**<br>**SK 7382 .Z** | 13.78 | 9.843 | 0.43 | 11.81 | 0.20 | M16 x 25 | 12.20 | 6.75 | 6.95 |
| **SK 8282 .Z**<br>**SK 8382 .Z** | 15.75 | 11.811 | 0.51 | 13.78 | 0.20 | M16 x 25 | 14.41 | 8.50 | 8.78 |

ALTERNATE SHAFTS SEE PAGES 388 - 393

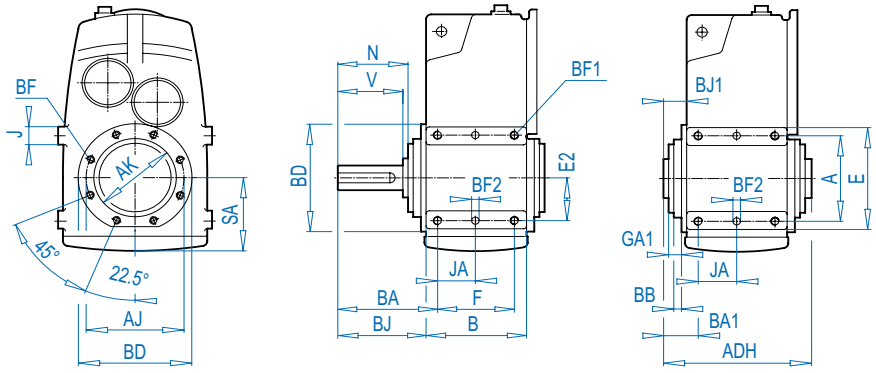


**Type** **Mounting dimensions flange B14** **Foot** **Outline dimensions** **Shaft dimensions**

| | BD | AK | GA1 | AJ | BB | BF (mm) | F<br>A | B<br>E | J<br>JA | BF2 (mm)<br>BF1 (mm) | SA<br>E2 | BA<br>BJ | BA1<br>BJ1 | ADH | V<br>N |
|---|---|---|---|---|---|---|---|---|---|---|---|---|---|---|---|
| **SK 9282 .Z**<br>**SK 9382 .Z** | 17.72 | 13.780 | 0.55 | 15.75 | 0.20 | M20 x 30 | 9.65<br>14.17 | 12.05<br>17.32 | 3.15<br>4.82 | Ø25 x 30<br>M30 x 45 | 11.61<br>7.09 | 12.40<br>11.16 | 2.56<br>1.32 | 16.93 | 9.84<br>10.23 |
| **SK 10282 .Z**<br>**SK 10382 .Z** | ⇨📖 364<br>⇨📖 366 | | | | | | | | | | | | | | |
| **SK 11282 .Z**<br>**SK 11382 .Z** | ⇨📖 368<br>⇨📖 370 | | | | | | | | | | | | | | |
| **SK 12382 .Z** | ⇨📖 372 | | | | | | | | | | | | | | |


Send Quote Requests to info@automatedpt.com
Call +1(800)985-6929 To Order or Order Online At Nordgearmotors.com

DRIVESYSTEMS





# B14 Pin Hole Locations



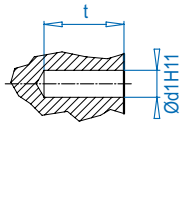


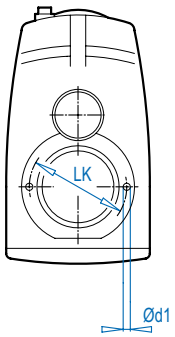


SK 0282NB -
SK 1382NB

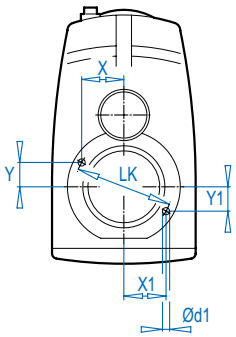


SK 1282 -
SK 5382

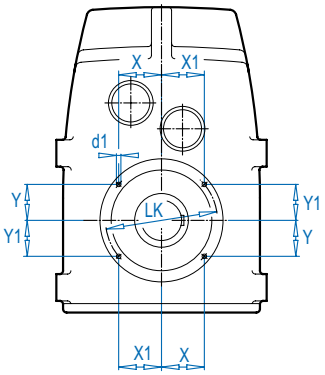


SK 6282 -
SK 12382

**Type** **Outline dimensions**

| | $d1^{H11}$ x t (mm) | LK | X | X1 | Y | Y1 |
|---|---|---|---|---|---|---|
| **SK 0182 NB .Z** | Ø 6 x 10 | 3.346 | 1.616 | - | 0.433 | - |
| **SK 0282 NB .Z** | Ø 6 x 12 | 3.937 | - | - | - | - |
| **SK 1382 NB .Z** | Ø 8 x 12 | 4.528 | - | - | - | - |
| **SK 1282 .Z** | Ø 8 x 12 | 4.528 | 2.210 | 2.210 | 0.490 | 0.490 |
| **SK 2282 .Z**<br>**SK 2382 .Z** | Ø 8 x 12 | 5.118 | 2.472 | 2.472 | 0.662 | 0.662 |
| **SK 3282 .Z**<br>**SK 3382 .Z** | Ø 10 x 15 | 6.496 | 3.171 | 3.171 | 0.703 | 0.703 |
| **SK 4282 .Z**<br>**SK 4382 .Z** | Ø 12 x 20 | 7.638 | 3.689 | 3.689 | 0.989 | 0.989 |
| **SK 5282 .Z**<br>**SK 5382 .Z** | Ø 12 x 20 | 8.465 | 4.132 | 4.132 | 0.916 | 0.916 |
| **SK 6282 .Z**<br>**SK 6382 .Z** | Ø 12 x 20 | 10.433 | 4.400 | 4.400 | 2.803 | 2.803 |
| **SK 7282 .Z**<br>**SK 7382 .Z** | Ø 16 x 30 | 11.811 | 4.981 | 4.981 | 3.173 | 3.173 |
| **SK 8282 .Z**<br>**SK 8382 .Z** | Ø 16 x 30 | 13.780 | 5.811 | 5.811 | 3.702 | 3.702 |
| **SK 9282 .Z**<br>**SK 9382 .Z** | Ø 16 x 30 | 15.748 | 6.641 | 6.641 | 4.231 | 4.231 |
| **SK 10282 .Z**<br>**SK 10382 .Z** | Ø 25 x 35 | 19.685 | 6.960 | 8.063 | 6.960 | 5.645 |
| **SK 11282 .Z**<br>**SK 11382 .Z** | Ø 25 x 25 | 19.685 | 6.960 | 8.063 | 6.960 | 5.645 |
| **SK 12382 .Z** | Ø 25 x 25 | 19.685 | 6.960 | 8.063 | 6.960 | 5.645 |


Send Quote Requests to info@automatedpt.com
Call +1(800)985-6929 To Order or Order Online At Nordgearmotors.com

# Footed Housing Option X





DRIVESYSTEMS



AX / VX

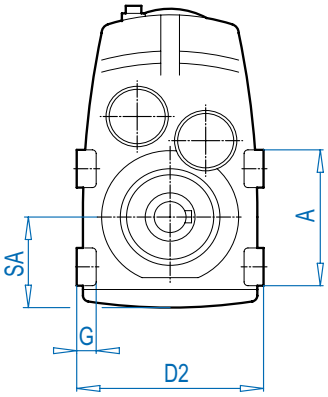


AX

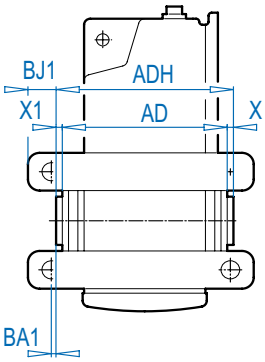


VX

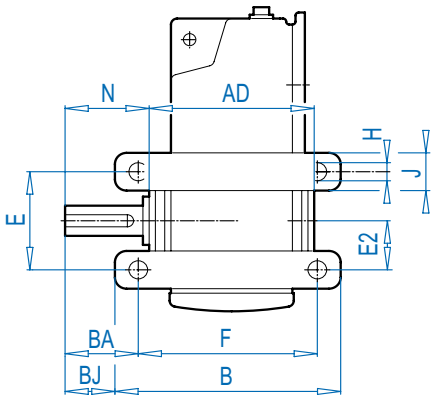


| Type | Mounting dimensions | | | | Outline dimensions | | | | | | | | | | | | | | |
|---|---|---|---|---|---|---|---|---|---|---|---|---|---|---|---|---|---|---|---|
| | F | E | G | B | A | J | H | E2 | SA | BA | BJ | BA1 | BJ1 | AD | ADH | X1 | X | D2 | N |
| SK 1282 .X | 5.59 | 3.15 | 0.63 | 6.46 | 4.33 | 1.18 | 0.43 | 1.69 | 3.03 | 2.47 | 2.04 | 0.28 | 0.71 | 4.53 | 4.80 | 0.16 | 0.12 | 6.69 | 2.90 |
| SK 2282 .X<br>SK 2382 .X | 6.50 | 3.15 | 0.79 | 7.68 | 4.57 | 1.42 | 0.51 | 1.93 | 3.54 | 2.54 | 1.95 | 0.22 | 0.81 | 4.96 | 5.47 | 0.20 | 0.31 | 7.87 | 2.95 |
| SK 3282 .X<br>SK 3382 .X | 7.68 | 4.92 | 0.98 | 8.86 | 6.50 | 1.57 | 0.51 | 2.44 | 4.21 | 3.11 | 2.52 | 0.43 | 1.02 | 6.38 | 6.85 | 0.24 | 0.24 | 9.29 | 3.74 |
| SK 4282 .X<br>SK 4382 .X | 8.66 | 4.92 | 1.10 | 10.24 | 6.69 | 1.77 | 0.71 | 2.87 | 4.84 | 3.96 | 3.17 | 0.37 | 1.16 | 7.13 | 7.68 | 0.28 | 0.28 | 11.02 | 4.28 |
| SK 5282 .X<br>SK 5382 .X | 9.84 | 6.89 | 1.38 | 11.42 | 8.66 | 1.77 | 0.71 | 3.54 | 5.75 | 4.63 | 3.84 | 0.49 | 1.28 | 8.46 | 9.05 | 0.30 | 0.30 | 12.60 | 5.30 |
| SK 6282 .X<br>SK 6382 .X | 12.99 | 7.68 | 1.57 | 15.35 | 10.43 | 2.76 | 1.02 | 3.98 | 6.77 | 4.82 | 3.64 | 1.02 | 2.20 | 10.75 | 11.42 | 0.33 | 0.33 | 14.17 | 5.78 |
| SK 7282 .X<br>SK 7382 .X | 14.57 | 8.46 | 1.77 | 17.32 | 12.01 | 3.54 | 1.30 | 4.45 | 7.76 | 5.51 | 4.13 | 1.18 | 2.56 | 11.73 | 12.20 | 0.24 | 0.24 | 16.69 | 6.95 |
| SK 8282 .X<br>SK 8382 .X | 16.54 | 9.45 | 2.36 | 19.69 | 13.78 | 4.33 | 1.30 | 4.88 | 8.86 | 7.48 | 5.90 | 1.02 | 2.60 | 13.86 | 14.41 | 0.28 | 0.28 | 19.69 | 8.78 |

ALTERNATE SHAFTS SEE PAGES 388 - 393

AXSH / VX

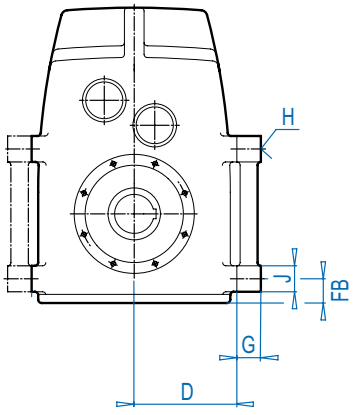


VX

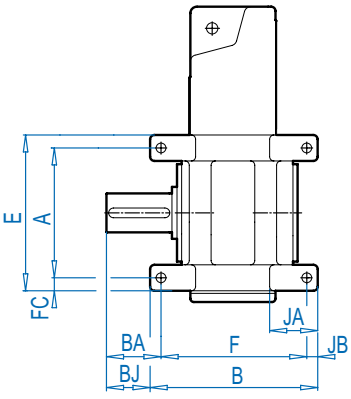


AXSH

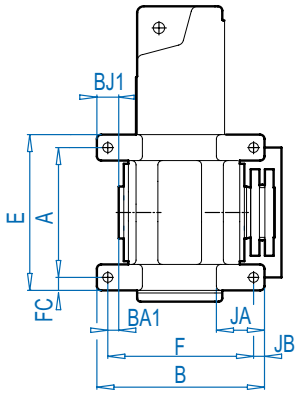


| Type | Mounting dimensions | | | | Outline dimensions | | | | | | | | | | | |
|---|---|---|---|---|---|---|---|---|---|---|---|---|---|---|---|---|
| | F | E | G | B | A | J | H | JA | FB | FC | JB | BA | BJ | BA1 | BJ1 | D |
| SK 9282 .X<br>SK 9382 .X | 18.50 | 18.11 | 2.76 | 22.44 | 14.17 | 3.94 | 1.77 | 7.48 | 4.53 | 1.97 | 1.97 | 8.86 | 6.89 | 0.98 | 2.95 | 12.60 |
| SK 10282 .X<br>SK 10382 .X | 17.72 | 20.87 | 3.94 | 20.87 | 16.54 | 4.33 | 1.54 | 6.69 | 3.94 | 2.17 | 1.57 | 12.32 | 10.75 | 0.51 | 1.06 | 13.39 |
| SK 11282 .X<br>SK 11382 .X | 19.69 | 28.35 | 4.33 | 23.62 | 23.62 | 4.72 | 1.77 | 7.87 | 4.41 | 2.36 | 1.97 | 11.93 | 9.96 | 0.12 | 1.85 | 18.50 |
| SK 12282 .X | 19.69 | 28.35 | 4.33 | 23.62 | 23.62 | 4.72 | 1.77 | 7.87 | 4.41 | 2.36 | 1.97 | 11.93 | 9.96 | 0.12 | 1.85 | 18.50 |


Send Quote Requests to info@automatedpt.com
Call +1(800)985-6929 To Order or Order Online At Nordgearmotors.com

DRIVESYSTEMS





# Output Shaft Protection Covers Option H or H66

## SK ... AH
## SK ... AZH

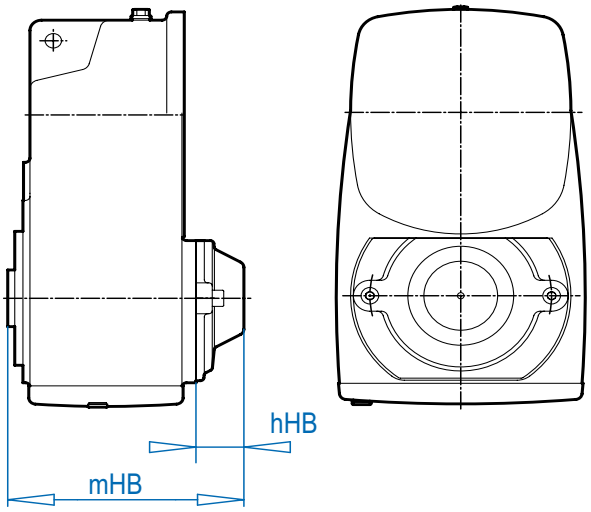


**Type**

| | hHB | mHB |
|---|---|---|
| SK 0182 NB AH<br>SK 0182 NB AZH | 0.98 | 4.80 |
| SK 0282 NB AH<br>SK 0282 NB AZH | 1.22 | 5.90 |
| SK 1382 NB AH<br>SK 1382 NB AZH | 1.42 | 8.27 |
| SK 1282 AH<br>SK 1282 AZH | 1.46 | 5.90 |
| SK 2282 AH<br>SK 2282 AZH<br>SK 2382 AH<br>SK 2382 AZH | 1.69 | 6.85 |
| SK 3282 AH<br>SK 3282 AZH<br>SK 3382 AH<br>SK 3382 AZH | 1.77 | 8.39 |
| SK 4282 AH<br>SK 4282 AZH<br>SK 4382 AH<br>SK 4382 AZH | 1.77 | 9.17 |
| SK 5282 AH<br>SK 5282 AZH<br>SK 5382 AH<br>SK 5382 AZH | 2.09 | 10.87 |
| SK 6282 AH<br>SK 6282 AZH<br>SK 6382 AH<br>SK 6382 AZH | 2.09 | 13.19 |
| SK 7282 AH<br>SK 7282 AZH<br>SK 7382 AH<br>SK 7382 AZH | 2.09 | 14.06 |
| SK 8282 AH<br>SK 8282 AZH<br>SK 8382 AH<br>SK 8382 AZH | 2.76 | 16.38 |
| SK 9282 AH<br>SK 9282 AZH<br>SK 9382 AH<br>SK 9382 AZH | 3.31 | 18.90 |

## SK ... AH66
## SK ... AZH66

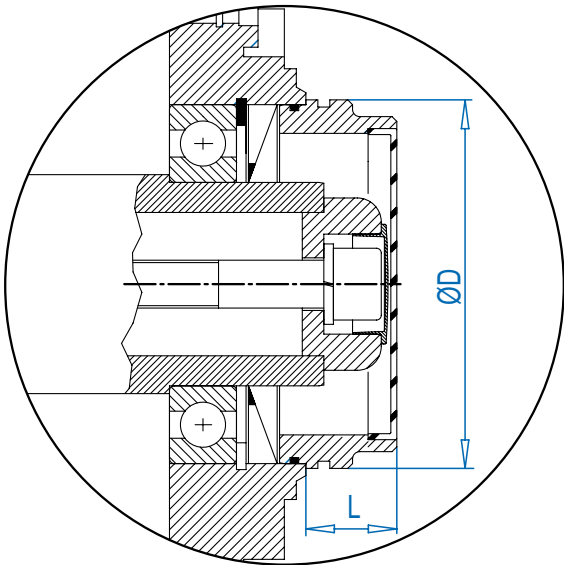


**Type**

| | ØD | L |
|---|---|---|
| SK 1282 AH66<br>SK 1282 AZH66 | 3.15 | 0.98 |
| SK 2282 AH66<br>SK 2282 AZH66 | 2.20 | 1.50 |
| SK 3282 AH66<br>SK 3282 AZH66 | 4.09 | 1.38 |
| SK 4282 AH66<br>SK 4282 AZH66 | 4.09 | 1.34 |
| SK 5282 AH66<br>SK 5282 AZH66 | 6.06 | 1.50 |
| SK 6282 AH66<br>SK 6282 AZH66 | 7.40 | 1.73 |
| SK 7282 AH66<br>SK 7282 AZH66 | 8.46 | 1.38 |
| SK 8282 AH66<br>SK 8282 AZH66 | 9.65 | 1.97 |




Send Quote Requests to info@automatedpt.com
Call +1(800)985-6929 To Order or Order Online At Nordgearmotors.com

Send Quote Requests to info@automatedpt.com
Call +1(800)985-6929 To Order or Order Online At Nordgearmotors.com

# Agitator Design Option VL2 & VL3





DRIVESYSTEMS

## SK ... AFVL2
## SK ... AFVL3

DIMENSIONS
Dimensions in Inches

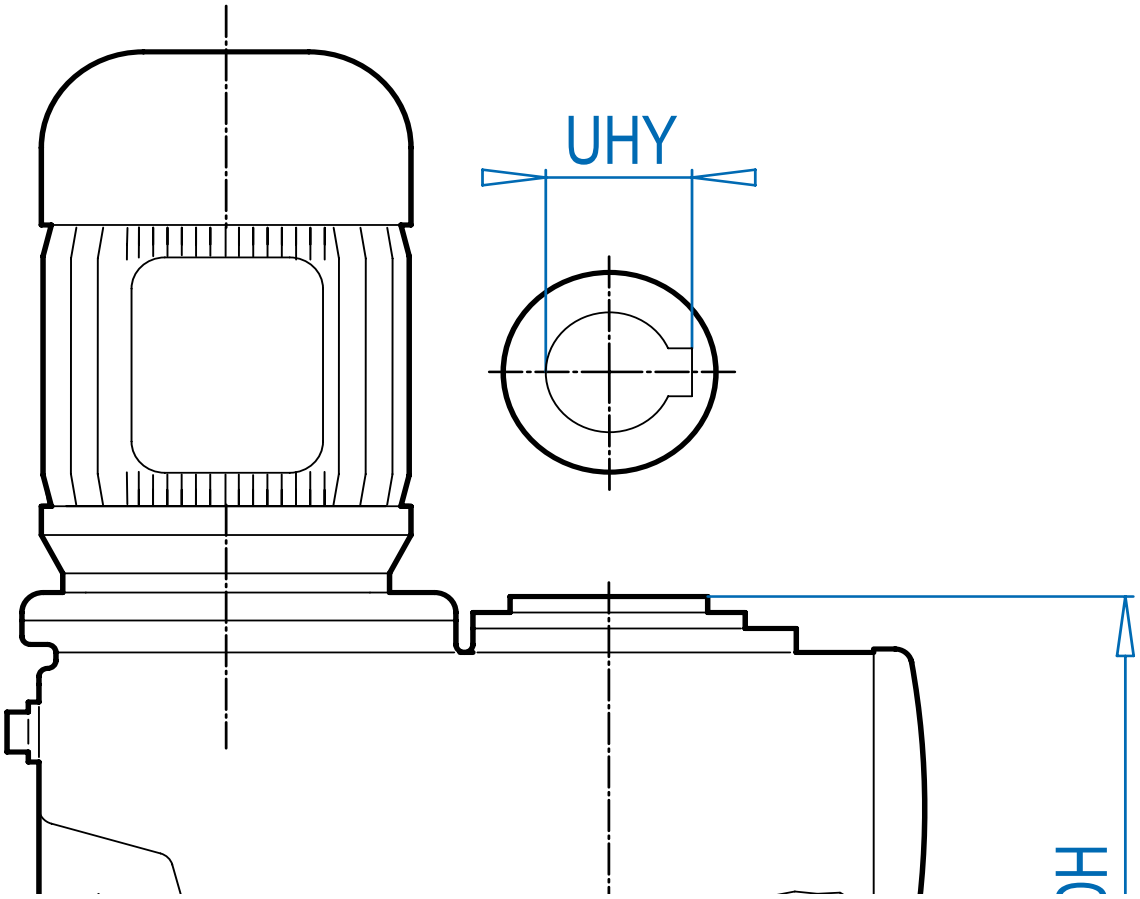


| Type | Outline dimensions | | | | | | | | Shaft dimensions | | | | | | |
|---|---|---|---|---|---|---|---|---|---|---|---|---|---|---|---|
| | BD | AK | GA | AJ | BB | AH1 | BF | G (mm) | UH | UYH | ADH | LB | LH | VE I | VE II |
| SK 1282 AF.. | 7.87 | 5.118 | 0.47 | 6.50 | 0.14 | 2.95 | 0.43 | M12 x 1.5 | 1.1875 | 1.31 | 7.09 | 1.57 | 1.57 | 6.13 | 6.88 |
| SK 2282 AF.. | 9.84 | 7.087 | 0.63 | 8.46 | 0.16 | 3.39 | 0.55 | M12 x 1.5 | 1.4375 | 1.61 | 8.19 | 1.97 | 1.97 | 7.52 | 7.93 |
| SK 3282 AF.. | 11.81 | 9.055 | 0.79 | 10.43 | 0.16 | 3.35 | 0.55 | M12 x 1.5 | 1.625 | 1.73 | 9.69 | 2.28 | 2.28 | 8.98 | 9.31 |
| SK 4282 AF.. | 11.81 | 9.055 | 0.79 | 10.43 | 0.16 | 4.45 | 0.55 | M12 x 1.5 | 2.0625 | 2.23 | 11.42 | 2.56 | 2.56 | 10.07 | 11.04 |
| SK 5282 AF.. | 13.78 | 9.843 | 0.79 | 11.81 | 0.20 | 5.31 | 0.71 | M12 x 1.5 | 2.4375 | 2.71 | 13.70 | 3.11 | 3.11 | 12.23 | 13.28 |
| SK 6282 AF.. | 15.75 | 11.811 | 0.87 | 13.78 | 0.20 | 6.54 | 0.71 | M24 x 1.5 | 2.750 | 3.03 | 17.19 | 4.72 | 4.72 | 16.73 | 16.77 |
| SK 7282 AF.. | 17.72 | 13.780 | 0.94 | 15.75 | 0.20 | 7.24 | 0.71 | M24 x 1.5 | 3.1875 | 3.40 | 18.78 | 4.96 | 4.96 | 18.26 | 18.36 |
| SK 8282 AF.. | 21.65 | 17.717 | 1.10 | 19.69 | 0.20 | 8.27 | 0.71 | M30 x 2 | 4.000 | 4.32 | 21.89 | 6.06 | 6.06 | 20.01 | 21.43 |
| SK 9282 AF.. | 25.98 | 21.654 | 1.26 | 23.62 | 0.24 | 10.31 | 0.87 | M30 x 2 | 4.750 | 5.11 | 26.30 | 7.32 | 7.32 | 24.55 | 25.84 |


Send Quote Requests to info@automatedpt.com
Call +1(800)985-6929 To Order or Order Online At Nordgearmotors.com




# Agitator Design Option VL2 & VL3

## SK ... VFVL2
## SK ... VFVL3

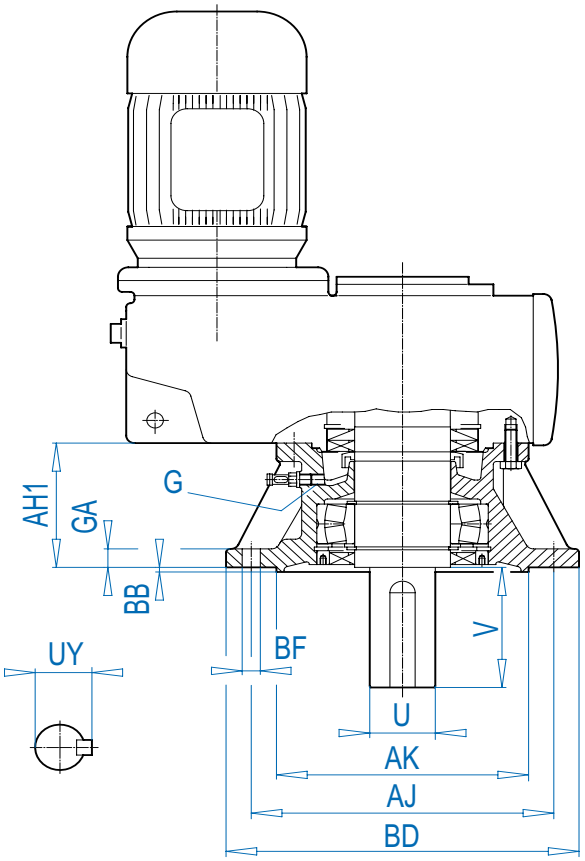


Solid Shaft

| Type | Outline dimensions | | | | | | | | Shaft dimensions | | | |
|---|---|---|---|---|---|---|---|---|---|---|---|---|
| | BD | AK | GA | AJ | BB | AH1 | BF | G (mm) | U | V | UY | Key |
| SK 1282 VF..<br>SK 1382 VF.. | 7.87 | 5.118 | 0.47 | 6.50 | 0.14 | 2.95 | 0.43 | M12 x 1.5 | 1.250 | 2.75 | 1.36 | 1/4 x 1/4 x 2-1/4 |
| SK 2282 VF..<br>SK 2382 VF.. | 9.84 | 7.087 | 0.63 | 8.46 | 0.16 | 3.39 | 0.55 | M12 x 1.5 | 1.375 | 2.75 | 1.51 | 5/16 x 5/16 x 2-1/4 |
| SK 3282 VF..<br>SK 3382 VF.. | 11.81 | 9.055 | 0.79 | 10.43 | 0.16 | 3.35 | 0.55 | M12 x 1.5 | 1.875 | 3.50 | 2.09 | 1/2 x 1/2 x 2-3/4 |
| SK 4282 VF..<br>SK 4382 VF.. | 11.81 | 9.055 | 0.79 | 10.43 | 0.16 | 4.45 | 0.55 | M12 x 1.5 | 2.250 | 4.00 | 2.47 | 1/2 x 1/2 x 3-1/4 |
| SK 5282 VF..<br>SK 5382 VF.. | 13.78 | 9.843 | 0.79 | 11.81 | 0.20 | 5.31 | 0.71 | M12 x 1.5 | 2.500 | 5.00 | 2.77 | 5/8 x 5/8 x 4 |
| SK 6282 VF..<br>SK 6382 VF.. | 15.75 | 11.811 | 0.87 | 13.78 | 0.20 | 6.54 | 0.71 | M24 x 1.5 | 3.000 | 5.50 | 3.33 | 3/4 x 3/4 x 4-1/2 |
| SK 7282 VF..<br>SK 7382 VF.. | 17.72 | 13.780 | 0.94 | 15.75 | 0.20 | 7.24 | 0.71 | M24 x 1.5 | 3.500 | 6.75 | 3.88 | 7/8 x 7/8 x 5-1/2 |
| SK 8282 VF..<br>SK 8382 VF.. | 21.65 | 17.717 | 1.10 | 19.69 | 0.20 | 8.27 | 0.71 | M30 x 2 | 4.250 | 8.50 | 4.69 | 1 x 1 x 7-1/4 |
| SK 9282 VF..<br>SK 9382 VF.. | 25.98 | 21.654 | 1.26 | 23.62 | 0.24 | 10.31 | 0.87 | M30 x 2 | 5.250 | 9.84 | 5.80 | 1-1/4 x 1-1/4 x 8-3/8 |
| SK 10282 VF..<br>SK 10382 VF.. | 25.98 | 21.654 | 1.38 | 23.62 | 0.31 | 11.89 | 1.02 | M30 x 2 | 6.250 | 11.81 | 6.91 | 1-1/2 x 1-1/2 x 10 |
| SK 11282 VF..<br>SK 11382 VF.. | 25.98 | 21.654 | 1.38 | 23.62 | 0.31 | 11.89 | 1.02 | M30 x 2 | 7.000 | 11.81 | 7.77 | 1-3/4 x 1-3/4 x 10 |
| SK 12382 VF.. | 25.98 | 21.654 | 1.38 | 23.62 | 0.31 | 11.89 | 1.02 | M30 x 2 | 7.000 | 11.81 | 7.77 | 1-3/4 x 1-3/4 x 10 |


Send Quote Requests to info@automatedpt.com
Call +1(800)985-6929 To Order or Order Online At Nordgearmotors.com

# Agitator Design Option VL 2 & VL 3



DRIVESYSTEMS

## SK ... AFSVL2
## SK ... AFSVL3

DIMENSIONS — Dimensions in Inches

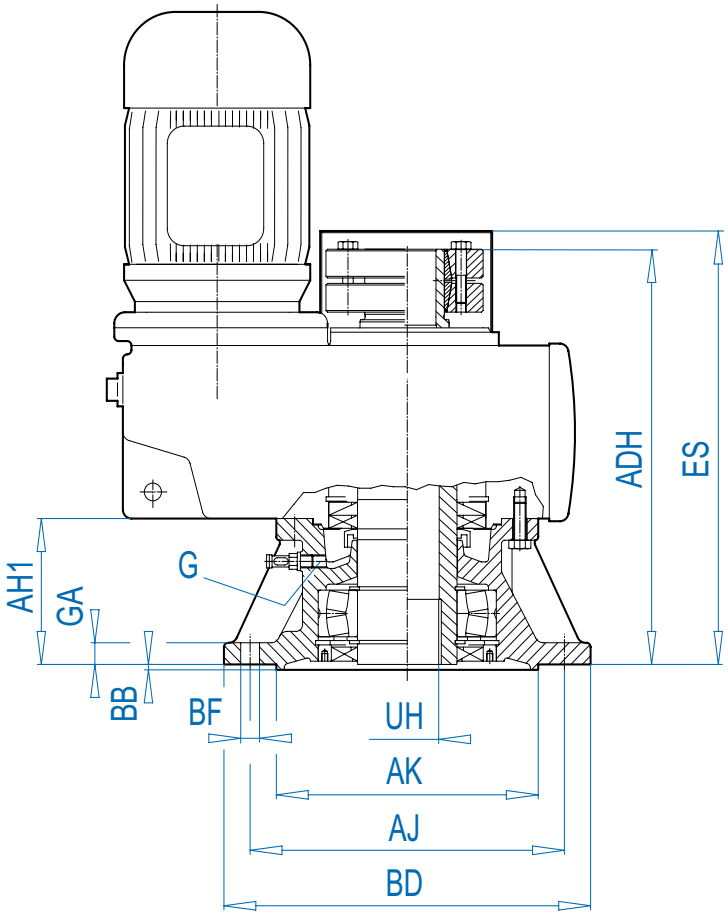


Shrink Disc

| Type | Outline dimensions | | | | | | | | Shaft dimensions | | |
|---|---|---|---|---|---|---|---|---|---|---|---|
| | BD | AK | GA | AJ | BB | AH1 | BF | G (mm) | UH | ADH | ES |
| SK 1282 AFS.. | 7.87 | 5.118 | 0.47 | 6.50 | 0.14 | 2.95 | 0.43 | M12 x 1.5 | 1.250 | 8.66 | 9.13 |
| SK 2282 AFS.. | 9.84 | 7.087 | 0.63 | 8.46 | 0.16 | 3.39 | 0.55 | M12 x 1.5 | 1.500 | 10.39 | 10.94 |
| SK 3282 AFS.. | 11.81 | 9.055 | 0.79 | 10.43 | 0.16 | 3.35 | 0.55 | M12 x 1.5 | 1.625 | 11.69 | 12.44 |
| SK 4282 AFS.. | 11.81 | 9.055 | 0.79 | 10.43 | 0.16 | 4.45 | 0.55 | M12 x 1.5 | 2.000 | 14.02 | 14.88 |
| SK 5282 AFS.. | 13.78 | 9.843 | 0.79 | 11.81 | 0.20 | 5.31 | 0.71 | M12 x 1.5 | 2.500 | 16.26 | 17.15 |
| SK 6282 AFS.. | 15.75 | 11.811 | 0.87 | 13.78 | 0.20 | 6.54 | 0.71 | M24 x 1.5 | 3.000 | 20.35 | 21.18 |
| SK 7282 AFS.. | 17.72 | 13.780 | 0.94 | 15.75 | 0.20 | 7.24 | 0.71 | M24 x 1.5 | 3.188 | 22.13 | 22.83 |
| SK 8282 AFS.. | 21.65 | 17.717 | 1.10 | 19.69 | 0.20 | 8.27 | 0.71 | M30 x 2 | 4.000 | 25.39 | 26.38 |
| SK 9282 AFS.. | 25.98 | 21.654 | 1.26 | 23.62 | 0.24 | 10.31 | 0.87 | M30 x 2 | 4.750 | 30.43 | 31.26 |
| SK 10282 AFS.. | 25.98 | 21.654 | 1.38 | 23.62 | 0.31 | 11.89 | 1.02 | M30 x 2 | 6.250 | 37.17 | 38.07 |
| SK 11282 AFS.. | 25.98 | 21.654 | 1.38 | 23.62 | 0.31 | 11.89 | 1.02 | M30 x 2 | 7.000 | 37.72 | 39.25 |
| SK 12382 AFS.. | 25.98 | 21.654 | 1.38 | 23.62 | 0.31 | 11.89 | 1.02 | M30 x 2 | 7.000 | 44.45 | 45.91 |


Send Quote Requests to info@automatedpt.com
Call +1(800)985-6929 To Order or Order Online At Nordgearmotors.com

DRIVESYSTEMS





# Rubber Buffers Option G & VG

## SK ... ..G

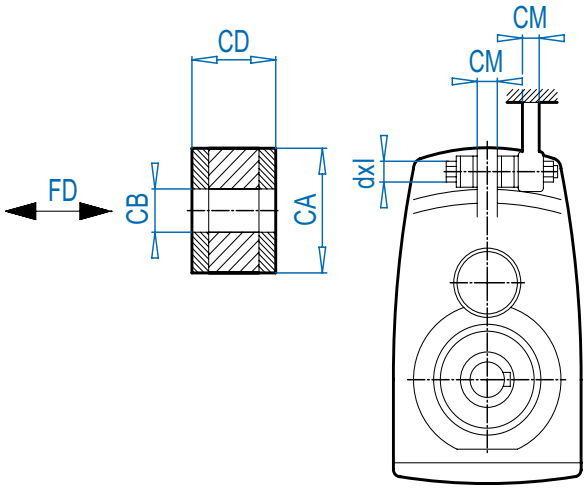


## SK ... .VG

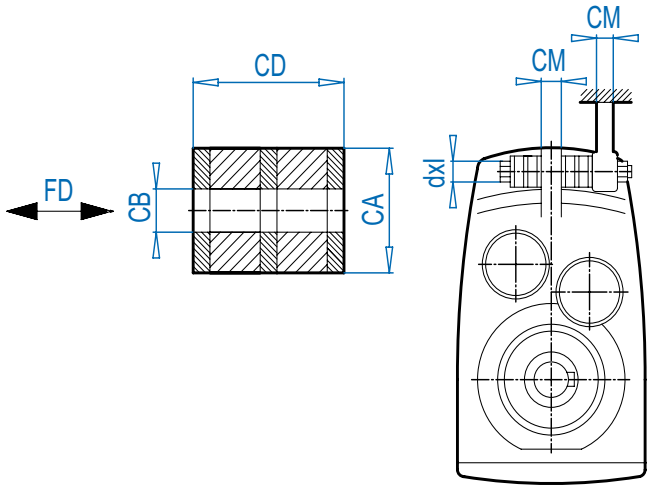




**SK ... G**

| Type | CB | CA | CD | CM | dxl (mm) | FD (lbs) | $s_{FD}$*(mm) |
|---|---|---|---|---|---|---|---|
| SK 0182NB ..G | 0.43 | 1.18 | 0.59 | 0.39 | M10 x 70 | 206 | 1.5 |
| SK 0282NB ..G | 0.43 | 1.18 | 0.59 | 0.47 | M10 x 70 | 235 | 1.7 |
| SK 1382NB ..G | 0.43 | 1.18 | 0.59 | 0.55 | M10 x 80 | 504 | 3.6 |
| SK 1282 ..G | 0.43 | 1.18 | 0.59 | 0.55 | M10 x 80 | 404 | 2,8 |
| SK 2282 ..G<br>SK 2382 ..G. | 0.49 | 1.57 | 0.59 | 0.63 | M12 x 90 | 600 | 1.8 |
| SK 3282 ..G<br>SK 3382 ..G | 0.49 | 1.57 | 0.59 | 0.71 | M12 x 90 | 914<br>935 | 2.9 |
| SK 4282 ..G<br>SK 4382 ..G | 0.83 | 2.36 | 1.18 | 0.87 | M20 x 150 | 1601<br>1663 | 7.3 |
| SK 5282 ..G<br>SK 5382 ..G | 0.83 | 2.36 | 1.18 | 1.10 | M20 x 150 | 2135<br>2111 | 9.4 |
| SK 6282 ..G<br>SK 6382 ..G | 0.98 | 3.15 | 1.57 | 1.38 | M24 x 190 | 2860<br>3782 | 9.2 |
| SK 7282 ..G<br>SK 7382 ..G | 0.98 | 3.15 | 1.57 | 1.57 | M24 x 200 | 3630<br>4681 | 11.4 |
| SK 8282 ..G<br>SK 8382 ..G | 1.22 | 3.94 | 1.97 | 1.97 | M30 x 260 | 5138<br>6387 | 16.3 |
| SK 9282 ..G<br>SK 9382 ..G | 1.22 | 3.94 | 1.97 | 2.17 | M30 x 260 | 6908<br>9785 | 24.4 |

*** Distance buffers compress at force.**

**SK ... VG**

| Type | CB | CA | CD | CM | dxl (mm) | FD (lbs) | $s_{FD}$*(mm) |
|---|---|---|---|---|---|---|---|
| SK 7282 .VG<br>SK 7382 .VG | 0.98 | 3.35 | 2.36 | 1.57 | M24 x 240 | 9450 | 12.2 |
| SK 8282 .VG<br>SK 8382 .VG | 1.22 | 4.33 | 3.54 | 1.97 | M30 x 340 | 12825 | 19.3 |
| SK 9282 .VG<br>SK 9382 .VG | 1.22 | 5.51 | 4.33 | 2.17 | M30 x 380 | 19575 | 21.2 |
| SK 10282 .VG<br>SK 10382 .VG | 1.22 | 5.51 | 4.33 | 3.15 | M30 x 430 | 25425 | 27.4 |
| SK 11282 .VG<br>SK 11382 .VG | 1.93 | 7.09 | 5.91 | 3.54 | M48 x 550 | 36450 | 38.5 |
| SK 12382 .VG | 1.93 | 7.09 | 5.91 | 3.54 | M48 x 550 | 47475 | 50.2 |

*** Distance buffers compress at force.**


Send Quote Requests to info@automatedpt.com
Call +1(800)985-6929 To Order or Order Online At Nordgearmotors.com

# Solid Shaft Dimensions

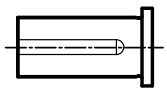

DRIVESYSTEMS

## Solid Shaft Dimensions (VZ/VF)



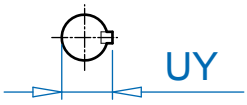


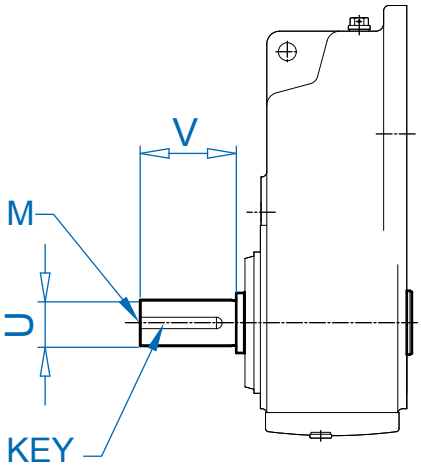


VZ

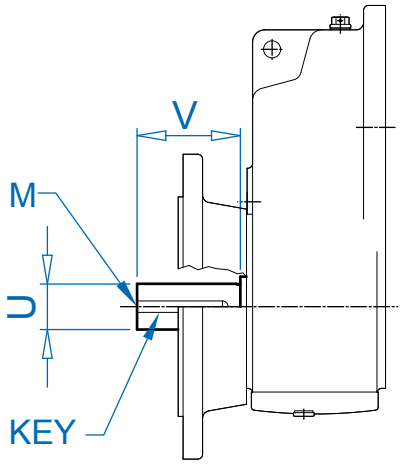


VF

| UNIT | U | DIAMETER TOLERANCE | V | UY | KEY SIZE w x h x l | KEY QTY | DRILL & TAP M |
|---|---|---|---|---|---|---|---|
| **SK 0182NB VZ/VF** | 0.750 | +0.0000 / -0.0005 | 1.50 | 0.83 | 3/16 x 3/16 x 1-1/4 | 1 | 1/4-20 |
| | 25mm | +0.015 / +0.002mm | 50mm | 28.0mm | 8 x 7 x 40mm | 1 | M10 |
| **SK 0282NB VZ/VF** | 1.000 | +0.0000 / -0.0005 | 2.13 | 1.11 | 1/4 x 1/4 x 1-5/8 | 1 | 3/8-16 |
| | 25mm | +0.015 / +0.002mm | 50mm | 28.0mm | 8 x 7 x 40mm | 1 | M10 |
| **SK 1382NB VZ/VF** | 1.250 | +0.0000 / -0.0005 | 2.75 | 1.36 | 1/4 x 1/4 x 2-1/4 | 1 | 1/2-13 |
| | 30mm | +0.015 / +0.002mm | 60mm | 33.0mm | 8 x 7 x 50mm | 1 | M10 |
| **SK 1282 VZ/VF** | 1.250 | +0.0000 / -0.0005 | 2.75 | 1.36 | 1/4 x 1/4 x 2-1/4 | 1 | 1/2-13 |
| **SK 1382 VZ/VF** | 30mm | +0.015 / +0.002mm | 60mm | 33.0mm | 8 x 7 x 50mm | 1 | M10 |
| **SK 2282 VZ/VF** | 1.375 | +0.0000 / -0.0005 | 2.75 | 1.51 | 5/16 x 5/16 x 2-1/8 | 1 | 5/8-11 |
| **SK 2382 VZ/VF** | 35mm | +0.018 / +0.002mm | 70mm | 38.0mm | 10 x 8 x 60mm | 1 | M12 |
| **SK 3282 VZ/VF** | 1.875 | +0.0000 / -0.0010 | 3.50 | 2.09 | 1/2 x 1/2 x 2-3/4 | 1 | 5/8-11 |
| **SK 3382 VZ/VF** | 45mm | +0.018 / +0.002mm | 90mm | 48.5mm | 14 x 9 x 80mm | 1 | M16 |
| **SK 4282 VZ/VF** | 2.250 | +0.0000 / -0.0010 | 4.00 | 2.47 | 1/2 x 1/2 x 3-1/4 | 1 | 3/4-10 |
| **SK 4382 VZ/VF** | 55mm | +0.030 / +0.011mm | 110mm | 59.0mm | 16 x 10 x 90mm | 1 | M20 |
| **SK 5282 VZ/VF** | 2.500 | +0.0000 / -0.0010 | 5.00 | 2.77 | 5/8 x 5/8 x 4 | 1 | 3/4-10 |
| **SK 5382 VZ/VF** | 65mm | +0.030 / +0.011mm | 130mm | 69.0mm | 18 x 11 x 100mm | 1 | M20 |
| **SK 6282 VZ/VF** | 3.000 | +0.0000 / -0.0010 | 5.50 | 3.33 | 3/4 x 3/4 x 4-1/2 | 1 | 3/4-10 |
| **SK 6382 VZ/VF** | 75mm | +0.030 / +0.011mm | 140mm | 79.5mm | 20 x 12 x 125mm | 1 | M20 |
| **SK 7282 VZ/VF** | 3.500 | +0.0000 / -0.0010 | 6.75 | 3.88 | 7/8 x 7/8 x 5-1/2 | 1 | 3/4-10 |
| **SK 7382 VZ/VF** | 90mm | +0.035 / +0.013mm | 170mm | 95.0mm | 25 x 14 x 140mm | 1 | M24 |
| **SK 8282 VZ/VF** | 4.250 | +0.0000 / -0.0010 | 8.50 | 4.69 | 1 x 1 x 7-1/4 | 1 | 1-8 |
| **SK 8382 VZ/VF** | 110mm | +0.035 / +0.013mm | 210mm | 116mm | 28 x 16 x 180mm | 1 | M24 |
| **SK 9282 VZ/VF** | 5.250 | +0.0000 / -0.0010 | 9.84 | 5.80 | 1-1/4 x 1-1/4 x 8-3/8 | 1 | 1-8 |
| **SK 9382 VZ/VF** | 140mm | +0.040 / +0.015mm | 250mm | 148mm | 36 x 20 x 200mm | 1 | M24 |
| **SK 10282 VZ/VF** | 6.250 | +0.0000 / -0.0010 | 11.81 | 6.91 | 1-1/2 x 1-1/2 x 10 | 1 | 1-8 |
| **SK 10382 VZ/VF** | 160mm | +0.040 / +0.015mm | 300mm | 169mm | 40 x 22 x 250mm | 1 | M24 |
| **SK 11282 VZ/VF** | 7.000 | +0.0000 / -0.0010 | 11.81 | 7.77 | 1-3/4 x 1-3/4 x 10 | 1 | 1-8 |
| **SK 11382 VZ/VF** | 180mm | +0.040 / +0.015mm | 300mm | 190mm | 45 x 25 x 250mm | 1 | M24 |
| **SK 12382 VZ/VF** | 7.000 | +0.0000 / -0.0010 | 11.81 | 7.77 | 1-3/4 x 1-3/4 x 10 | 1 | 1-8 |
| | 180mm | +0.040 / +0.015mm | 300mm | 190mm | 45 x 25 x 250mm | 1 | M24 |

- Dimensions are in inches unless otherwise noted.
- Metric Keys are captured in keyways.
- For shaft sizes not shown, consult NORD.


Send Quote Requests to info@automatedpt.com
Call +1(800)985-6929 To Order or Order Online At Nordgearmotors.com

DRIVESYSTEMS

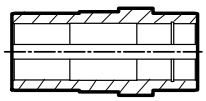

# Hollow Shaft Dimensions



## Hollow Shaft Dimensions (AZ-AF-AX)

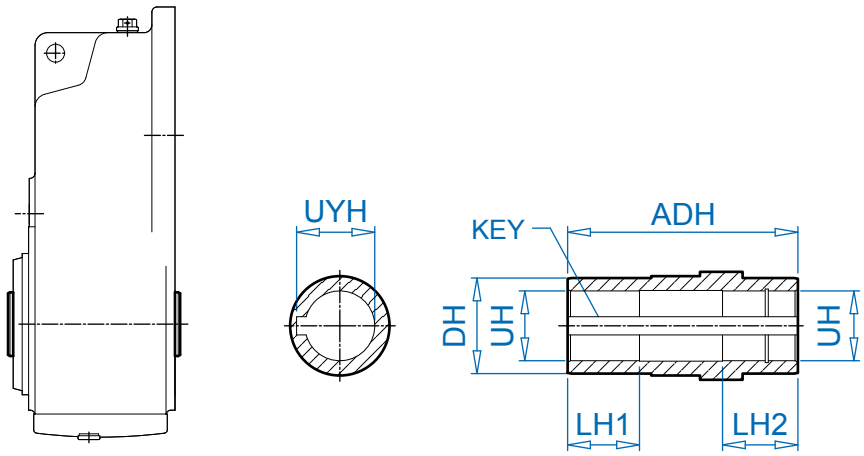


| Type | UH | DIAMETER TOLERANCE | ADH | LH1 | LH2 | DH | UYH | KEY SIZE w x h x l | KEY QTY |
|---|---|---|---|---|---|---|---|---|---|
| **SK 0182 NB AZ/AF/AX** | 0.750* | +0.0010 / -0.0000 | 3.94 | 1.18 | 1.18 | 1.38 | 0.84 | 3/16 x 3/16 x 1-1/2 | 2 |
| | 0.500 | +0.0010 / -0.0000 | 3.94 | 1.18 | 1.18 | 1.38 | 0.56 | 1/8 x 1/8 x 1-1/2 | 2 |
| | 25mm | +0.021 / -0.000 mm | 100mm | 30mm | 30mm | 35mm | 28.3 mm | 8 x7 x 40mm | 2 |
| **SK 0282NB AZ/AF/AX** | 1.000* | +0.0010 / -0.0000 | 4.80 | 1.57 | 1.57 | 1.57 | 1.11 | 1/4 x 1/4 x 2-1/8 | 2 |
| | 1.1875 | +0.0010 / -0.0000 | 4.80 | 1.57 | 1.57 | 1.57 | 1.30 | 1/4 x 1/4 x 2 | 2 |
| | 0.750 | +0.0010 / -0.0000 | 4.80 | 1.57 | 1.57 | 1.57 | 0.84 | 3/16 x 3/16 x 1-1/2 | 2 |
| | 25mm | +0.021 / -0.000 mm | 122mm | 40mm | 40mm | 40mm | 28.3 mm | 8 x 7 x 40mm | 2 |
| | 30mm | +0.021 / -0.000 mm | 122mm | 40mm | 40mm | 40mm | 33.3 mm | 8 x 7 x 40mm | 2 |
| **SK 1382NB AZ/AF/AX** | 1.375* | +0.0010 / -0.0000 | 6.93 | 1.69 | 3.15 | 1.97 | 1.52 | 5/16 x 5/16 x 2-1/2 | 2 |
| | 1.4375 | +0.0010 / -0.0000 | 6.93 | 2.36 | 2.36 | 1.97 | 1.61 | 3/8 x 3/8 x 2-1/2 | 2 |
| | 1.250 | +0.0010 / -0.0000 | 6.93 | 2.36 | 3.15 | 1.97 | 1.37 | 1/4 x 1/4 x 2-1/4 | 2 |
| | 35mm | +0.025 / -0.000 mm | 176mm | 60mm | 80mm | 50mm | 38.3 mm | 10 x 8 x 60mm | 2 |
| **SK 1282 AZ/AF/AX** | 1.1875* | +0.0010 / -0.0000 | 4.80 | 1.57 | 1.57 | 1.77 | 1.31 | 1/4 x 1/4 x 1-5/8 | 2 |
| | 1.250 | +0.0010 / -0.0000 | 4.80 | 1.57 | 1.57 | 1.77 | 1.37 | 1/4 x 1/4 x 1-5/8 | 2 |
| | 1.000 | +0.0010 / -0.0000 | 4.80 | 1.57 | 1.57 | 1.77 | 1.11 | 1/4 x 1/4 x 1-5/8 | 2 |
| | 0.750 | +0.0010 / -0.0000 | 4.80 | 1.57 | 1.57 | 1.77 | 0.84 | 3/16 x 3/16 x 1-1/2 | 2 |
| | 30mm | +0.021 / -0.000 mm | 122mm | 40mm | 40mm | 45mm | 33.3 mm | 8 x 7 x 40mm | 2 |
| **SK 2282 AZ/AF/AX** | 1.4375* | +0.0010 / -0.0000 | 5.47 | 1.97 | 1.97 | 1.97 | 1.61 | 3/8 x 3/8 x 2 | 2 |
| **SK 2382 AZ/AF/AX** | 1.500 | +0.0010 / -0.0000 | 5.47 | 1.97 | 1.97 | 1.97 | 1.61 | 3/8 x 1/4 x 2 | 2 |
| | 1.375 | +0.0010 / -0.0000 | 5.47 | 1.97 | 1.97 | 1.97 | 1.52 | 5/16 x 5/16 x 2 | 2 |
| | 1.250 | +0.0010 / -0.0000 | 5.47 | 1.97 | 1.97 | 1.97 | 1.37 | 1/4 x 1/4 x 2-1/8 | 2 |
| | 35mm | +0.025 / -0.000 mm | 139mm | 50mm | 50mm | 50mm | 38.3 mm | 10 x 8 x 42mm | 2 |
| **SK 3282 AZ/AF/AX** | 1.625* | +0.0010 / -0.0000 | 6.85 | 2.28 | 2.28 | 2.17 | 1.73 | 3/8 x 1/4 x 2-1/4 | 2 |
| **SK 3382 AZ/AF/AX** | 1.500 | +0.0010 / -0.0000 | 6.85 | 2.28 | 2.28 | 2.17 | 1.61 | 3/8 x 1/4 x 2-1/4 | 2 |
| | 1.4375 | +0.0010 / -0.0000 | 6.85 | 2.28 | 2.28 | 2.17 | 1.61 | 3/8 x 3/8 x 2-1/2 | 2 |
| | 40mm | +0.025 / -0.000 mm | 174mm | 58mm | 58mm | 55mm | 43.3 mm | 12 x 8 x 50mm | 2 |
| **SK 4282 AZ/AF/AX** | 2.0625* | +0.0012 / -0.0000 | 7.68 | 2.56 | 2.56 | 2.76 | 2.22 | 1/2 x 3/8 x 2-5/8 | 2 |
| **SK 4382 AZ/AF/AX** | 1.9375 | +0.0012 / -0.0000 | 7.68 | 2.56 | 2.56 | 2.76 | 2.16 | 1/2 x 1/2 x 2-3/4 | 2 |
| | 2.000 | +0.0012 / -0.0000 | 7.68 | 2.56 | 2.56 | 2.76 | 2.22 | 1/2 x 1/2 x 2-3/4 | 2 |
| | 1.6875 | +0.0012 / -0.0000 | 7.68 | 2.56 | 2.56 | 2.76 | 1.86 | 3/8 x 3/8 x 2-1/2 | 2 |
| | 50mm | +0.025 / -0.000 mm | 195mm | 65mm | 65mm | 70mm | 53.8 mm | 14 x 9 x 63mm | 2 |

* standard size

- Dimensions are in inches unless otherwise noted.
- For shaft sizes not shown, consult NORD.


Send Quote Requests to info@automatedpt.com
Call +1(800)985-6929 To Order or Order Online At Nordgearmotors.com

Send Quote Requests to info@automatedpt.com
Call +1(800)985-6929 To Order or Order Online At Nordgearmotors.com

# Hollow Shaft Dimensions

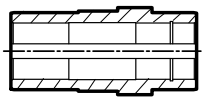

DRIVESYSTEMS

## Hollow Shaft Dimensions (AZ-AF-AX)

DIMENSIONS — Dimensions in Inches

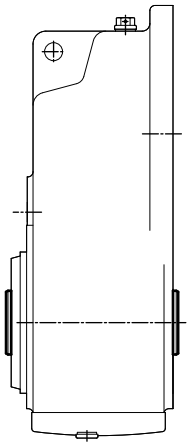

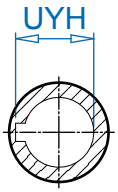


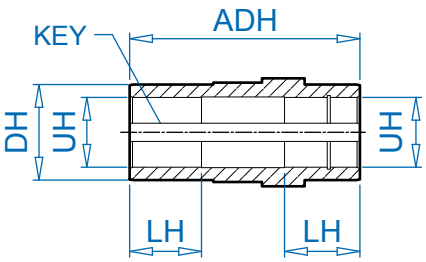


| Type | UH | DIAMETER TOLERANCE | ADH | LH | DH | UYH | KEY SIZE w x h x l | KEY QTY |
|---|---|---|---|---|---|---|---|---|
| **SK 5282 AZ/AF/AX** | 2.4375* | +0.0012 / -0.0000 | 9.06 | 2.95 | 3.35 | 2.71 | 5/8 x 5/8 x 3-1/2 | 2 |
| **SK 5382 AZ/AF/AX** | 2.375 | +0.0012 / -0.0000 | 9.06 | 2.95 | 3.35 | 2.65 | 5/8 x 5/8 x 3-1/2 | 2 |
| | 2.1875 | +0.0012 / -0.0000 | 9.06 | 2.95 | 3.35 | 2.41 | 1/2 x 1/2 x 3 | 2 |
| | 60mm | +0.030 / -0.000 mm | 230mm | 75mm | 85mm | 64.4 mm | 18 x 11 x 70mm | 2 |
| **SK 6282 AZ/AF/AX** | 2.750* | +0.0012 / -0.0000 | 11.42 | 3.54 | 3.94 | 3.03 | 5/8 x 5/8 x 4 | 2 |
| **SK 6382 AZ/AF/AX** | 2.9375 | +0.0012 / -0.0000 | 11.42 | 3.54 | 3.94 | 3.14 | 3/4 x 1/2 x 4 | 2 |
| | 2.4375 | +0.0012 / -0.0000 | 11.42 | 3.54 | 3.94 | 2.71 | 5/8 x 5/8 x 3-1/2 | 2 |
| | 70mm | +0.030 / -0.000 mm | 290mm | 120mm | 100mm | 74.9 mm | 20 x 12 x 125mm | 2 |
| **SK 7282 AZ/AF/AX** | 3.1875* | +0.0012 / -0.0000 | 12.20 | 3.54 | 4.33 | 3.40 | 3/4 x 1/2 x 4 | 2 |
| **SK 7382 AZ/AF/AX** | 3.250 | +0.0012 / -0.0000 | 12.20 | 3.54 | 4.33 | 3.46 | 3/4 x 1/2 x 4 | 2 |
| | 2.9375 | +0.0012 / -0.0000 | 12.20 | 3.54 | 4.33 | 3.14 | 3/4 x 1/2 x 4 | 2 |
| | 80mm | +0.030 / -0.000 mm | 310mm | 80mm | 110mm | 85.4 mm | 22 x 14 x 128mm | 2 |
| **SK 8282 AZ/AF/AX** | 4.0625* | +0.0014 / -0.0000 | 14.41 | 4.65 | 5.12 | 4.25 | 1 x 1/2 x 6 | 2 |
| **SK 8382 AZ/AF/AX** | 3.9375 | +0.0014 / -0.0000 | 14.41 | 6.06 | 5.12 | 4.25 | 1 x 3/4 x 4-3/4 | 2 |
| | 4.000 | +0.0014 / -0.0000 | 14.41 | 4.65 | 5.12 | 4.32 | 1 x 3/4 x 4-3/4 | 2 |
| | 3.4375 | +0.0014 / -0.0000 | 14.41 | 6.06 | 5.12 | 3.82 | 7/8 x 7/8 x4-3/4 | 2 |
| | 100mm | +0.035 / -0.000 mm | 366mm | 154mm | 130mm | 106.4 mm | 28 x 16 x 150mm | 2 |
| **SK 9282 AZ/AF/AX** | 4.750* | +0.0014 / -0.0000 | 16.93 | 6.50 | 6.30 | 5.11 | 1-1/4 x 7/8 x 7 | 2 |
| **SK 9382 AZ/AF/AX** | 4.9375 | +0.0014 / -0.0000 | 16.93 | 6.50 | 6.30 | 5.30 | 1-1/4 x 7/8 x 7 | 2 |
| | 4.4375 | +0.0014 / -0.0000 | 16.93 | 7.32 | 6.30 | 4.89 | 1 x 1 x 7-1/4 | 2 |
| | 120mm | +0.035 / -0.000 mm | 430mm | 120mm | 160mm | 127.4mm | 32 x 18 x 180mm | 2 |

* standard size

- Dimensions are in inches unless otherwise noted.
- For shaft sizes not shown, consult NORD.


Send Quote Requests to info@automatedpt.com
Call +1(800)985-6929 To Order or Order Online At Nordgearmotors.com

Send Quote Requests to info@automatedpt.com
Call +1(800)985-6929 To Order or Order Online At Nordgearmotors.com

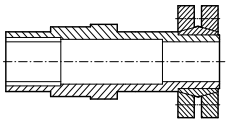

# Shrink Disc Shaft Dimensions

## Shrink Disc Shaft Dimensions (AZSH)

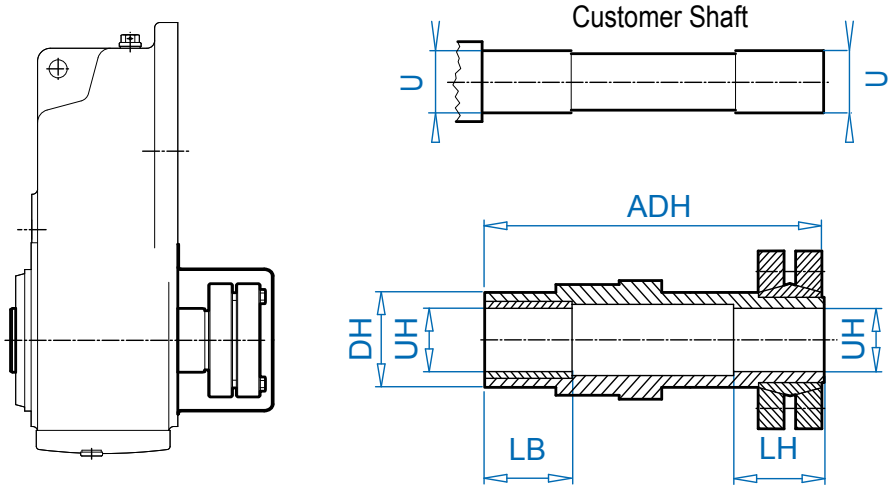


| TYPE | HOLLOW SHAFT | | ADH | LB | LH | DH | CUSTOMER SHAFT | |
|---|---|---|---|---|---|---|---|---|
| | UH | TOLERANCE | | | | | U | TOLERANCE |
| **SK 0282NB AZSH** | 1.1875 | +0.0009 / -0.0000 | 6.30 | 1.18 | 1.57 | 1.57 | 1.1875 | +0.0000 / -0.0006 |
| | 30mm | +0.021 / -0.000mm | 160mm | 30mm | 40mm | 40mm | 30mm | +0.000 / -0.013mm |
| **SK 1382NB AZSH** | 1.500 | +0.0009 / -0.0000 | 8.66 | 1.57 | 1.77 | 1.97 | 1.500 | +0.0000 / -0.0006 |
| | 35mm | +0.025 / -0.000mm | 220mm | 40mm | 45mm | 50mm | 35mm | +0.000 / -0.016mm |
| **SK 1282 AZSH** | 1.250 | +0.0009 / -0.0000 | 6.38 | 1.18 | 1.57 | 1.77 | 1.250 | +0.0000 / -0.0006 |
| | 30mm | +0.021 / -0.000mm | 162mm | 31mm | 40mm | 45mm | 30mm | +0.000 / -0.013mm |
| **SK 2282 AZSH** | 1.500 | +0.0009 / -0.0000 | 7.68 | 1.57 | 1.77 | 1.97 | 1.500 | +0.0000 / -0.0006 |
| | 35mm | +0.025 / -0.000mm | 195mm | 41.5mm | 45mm | 50mm | 35mm | +0.000 / -0.016mm |
| **SK 3282 AZSH/** | 1.625 | +0.0009 / -0.0000 | 8.86 | 1.61 | 2.17 | 2.17 | 1.625 | +0.0000 / -0.0006 |
| **SK 3382 AZSH** | 40mm | +0.025 / -0.000mm | 225mm | 41mm | 55mm | 55mm | 40mm | +0.000 / -0.016mm |
| **SK 4282 AZSH** | 2.000 | +0.0011 / -0.0000 | 10.28 | 2.01 | 2.17 | 2.76 | 2.000 | +0.0000 / -0.0007 |
| | 50mm | +0.025 / -0.000mm | 261mm | 51mm | 55mm | 70mm | 50mm | +0.000 / -0.016mm |
| **SK 5282 AZSH** | 2.500 | +0.0011 / -0.0000 | 11.61 | 2.17 | 2.76 | 3.35 | 2.500 | +0.0000 / -0.0007 |
| | 60mm | +0.030 / -0.000mm | 295mm | 61mm | 70mm | 85mm | 60mm | +0.000 / -0.019mm |
| **SK 6282 AZSH/** | 3.000 | +0.0011 / -0.0000 | 14.57 | 2.56 | 3.35 | 3.94 | 3.000 | +0.0000 / -0.0007 |
| **SK 6382 AZSH** | 70mm | +0.030 / -0.000mm | 370mm | 71mm | 85mm | 100mm | 70mm | +0.000 / -0.019mm |
| **SK 7282 AZSH/** | 3.1875 | +0.0013 / -0.0000 | 15.55 | 2.17 | 3.54 | 4.33 | 3.1875 | +0.0000 / -0.0008 |
| **SK 7382 AZSH** | 80mm | +0.030 / -0.000mm | 395mm | 81mm | 90mm | 110mm | 80mm | +0.000 / -0.019mm |
| **SK 8282 AZSH/** | 4.000 | +0.0013 / -0.0000 | 17.95 | 2.76 | 3.74 | 5.12 | 4.000 | +0.0000 / -0.0008 |
| **SK 8382 AZSH** | 100mm | +0.035 / -0.000mm | 456mm | 71mm | 95mm | 130mm | 100mm | +0.000 / -0.022mm |
| **SK 9282 AZSH/** | 4.750 | +0.0015 / -0.0000 | 21.06 | 3.23 | 4.33 | 6.30 | 4.750 | +0.0000 / -0.0009 |
| **SK 9382 AZSH** | 125mm | +0.040 / -0.000mm | 535mm | 82mm | 110mm | 160mm | 125mm | +0.000 / -0.022mm |
| **SK 10282 AZSH/** | 6.250 | +0.0015 / -0.0000 | 25.98 | 4.72 | 5.12 | 8.66 | 6.250 | +0.0000 / -0.0009 |
| **SK 10382 AZSH** | 160mm | +0.040 / -0.000mm | 660mm | 122mm | 130mm | 220mm | 160mm | +0.000 / -0.025mm |
| **SK 11282 AZSH/** | 7.000 | +0.0015 / -0.0000 | 26.57 | 4.00 | 4.33 | 9.45 | 7.000 | +0.0000 / -0.0009 |
| **SK 11382 AZSH** | 180mm | +0.040 / -0.000mm | 675mm | 101.5mm | 110mm | 240mm | 180mm | +0.000 / -0.025mm |
| **SK 12382 AZSH** | 7.000 | +0.0015 / -0.0000 | 33.27 | 4.00 | 10.59 | 9.45 | 7.000 | +0.0000 / -0.0009 |
| | 180mm | +0.040 / -0.000mm | 845mm | 101.5mm | 269mm | 240mm | 180mm | +0.000 / -0.025mm |


Send Quote Requests to info@automatedpt.com
Call +1(800)985-6929 To Order or Order Online At Nordgearmotors.com

Send Quote Requests to info@automatedpt.com
Call +1(800)985-6929 To Order or Order Online At Nordgearmotors.com

# Heavy Duty Shrink Disc Shaft Dimensions

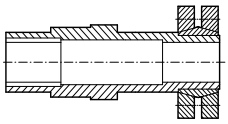

DRIVESYSTEMS

## Heavy Duty Shrink Disc Shaft Dimensions (AZVSH)

DIMENSIONS
Dimensions in Inches

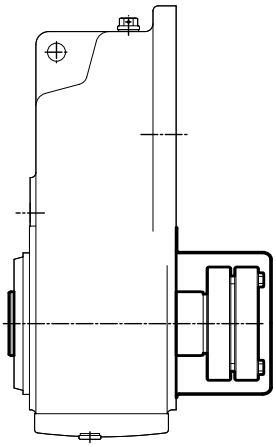

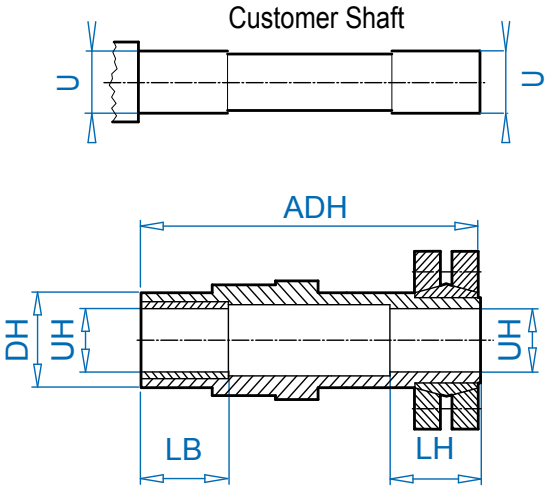


| TYPE | HOLLOW SHAFT | | ADH | LB | LH | DH | CUSTOMER SHAFT | |
|---|---|---|---|---|---|---|---|---|
| | UH | TOLERANCE | | | | | U | TOLERANCE |
| **SK 7282 AZVSH** | 3.1875 | +0.0013 / -0.0000 | 16.89 | 2.20 | 4.72 | 4.33 | 3.1875 | +0.0000 / -0.0008 |
| **SK 7382 AZVSH** | 85mm | +0.035 / -0.000 | 429mm | 56mm | 120mm | 110mm | 85mm | +0.000 / -0.019mm |
| **SK 8282 AZVSH** | 4.000 | +0.0013 / -0.0000 | 20.08 | 2.76 | 5.87 | 5.12 | 4.000 | +0.0000 / -0.0008 |
| **SK 8382 AZVSH** | 100mm | +0.035 / -0.000 | 510mm | 71.5mm | 149mm | 130mm | 100mm | +0.000 / -0.022mm |
| **SK 9282 AZVSH** | 4.750 | +0.0015 / -0.0000 | 23.90 | 3.23 | 7.17 | 6.30 | 4.750 | +0.0000 / -0.0009 |
| **SK 9382 AZVSH** | 130mm | +0.040 / -0.000 | 607mm | 82mm | 182mm | 160mm | 130mm | +0.000 / -0.022mm |
| **SK 10282 AZVSH** | 6.250 | +0.0015 / -0.0000 | 25.98 | 4.72 | 5.12 | 8.66 | 6.25 | +0.0000 / -0.0009 |
| **SK 10382 AZVSH** | 160mm | +0.040 / -0.000 | 660 | 122 | 130 | 220 | 160 | +0.000 / -0.022mm |
| **SK 11282 AZVSH** | 7.000 | +0.0015 / -0.0000 | 29.72 | 4.00 | 7.68 | 9.45 | 7.000 | +0.0000 / -0.0009 |
| **SK 11382 AZVSH** | 180mm | +0.040 / -0.000 | 755mm | 101.5mm | 195mm | 240mm | 180mm | +0.000 / -0.025mm |


Send Quote Requests to info@automatedpt.com
Call +1(800)985-6929 To Order or Order Online At Nordgearmotors.com

Send Quote Requests to info@automatedpt.com Call +1(800)985-6929 To Order or Order Online At Nordgearmotors.com



## Splined Hollow Shaft Dimensions (EA)

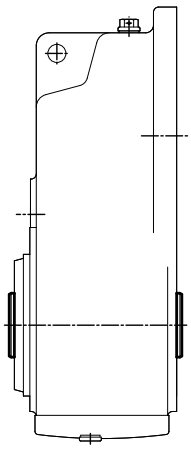

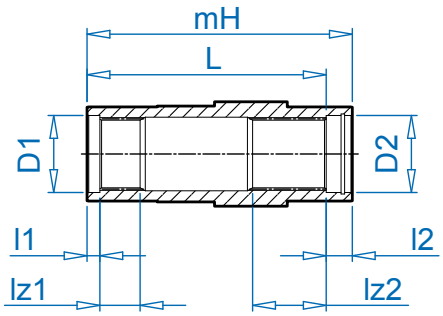




| Type | HUB PROFILE DIN 5480 [mm] | l1 [mm] | l2 [mm] | lz1 [mm] | lz2 [mm] | mH [mm] | D1/D2 [mm] | L * [mm] |
|---|---|---|---|---|---|---|---|---|
| **SK 1282 EA** | N30 x 1.25 x 30 x 22 x 9H | 5 | 22 | 33 | 33 | 122 | 35 | 100 |
| **SK 2282 EA** | N35 x 2 x 30 x 16 x 9H | 5 | 29 | 40 | 33 | 139 | 40 | 110 |
| **SK 3282 EA** | N40 x 2 x 30 x 18 x 9H | 8 | 34 | 41 | 50 | 174 | 45 | 140 |
| **SK 4282 EA** | N50 x 2 x 30 x 24 x 9H | 10 | 35 | 43 | 53 | 195 | 55 | 160 |
| **SK 5282 EA** | N60 x 2 x 30 x 28 x 9H | 15 | 45 | 43 | 65 | 230 | 65 | 185 |
| **SK 6282 EA** | N70 x 2 x 30 x 34 x 9H | 15 | 45 | 53 | 98.5 | 290 | 75 | 245 |
| **SK 7282 EA** | N85 x 3 x 30 x 27 x 9H | 15 | 60 | 47 | 86 | 310 | 90 | 250 |
| **SK 8282 EA** | N105 x 3 x 30 x 34 x 9H | 15 | 56 | 57 | 122 | 366 | 110 | 310 |
| **SK 9282 EA** | N130 x 5 x 30 x 24 x 9H | 15 | 60 | 67 | 147 | 430 | 135 | 370 |


Send Quote Requests to info@automatedpt.com
Call +1(800)985-6929 To Order or Order Online At Nordgearmotors.com

# Fixing Element Kit





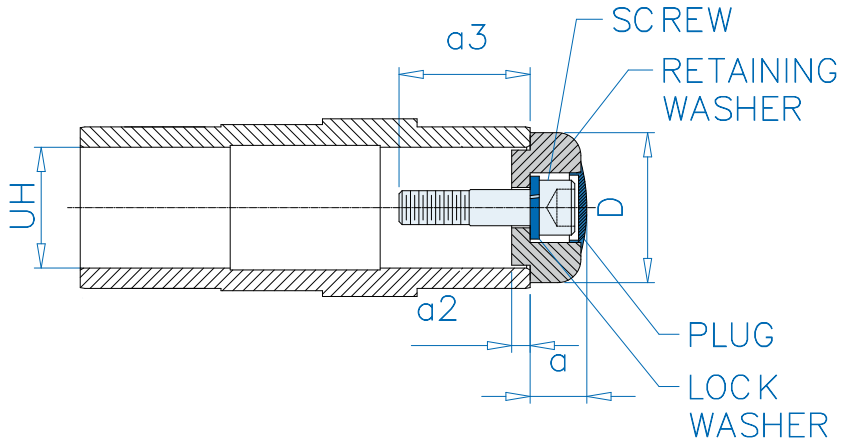


**Inch Shaft Hollow Bore (in)**

| UH | D | a | a2 | Screw ❶ | a3 ❶ | Screw ❷ | a3 ❷ | Screw ❸ | a3 ❸ |
|---|---|---|---|---|---|---|---|---|---|
| 0.5000 | 0.984 | 0.565 | 0.110 | 10 - 32 x 5/8 | 0.499 | - | - | - | - |
| 0.7500 | 1.181 | 0.557 | 0.118 | 1/4 - 20 x 3/4 | 0.652 | 1/4 - 20 x 1 | 0.902 | - | - |
| 1.0000 | 1.496 | 0.767 | 0.150 | 3/8 - 16 x 3/4 | 0.624 | 3/8 - 16 x 1-1/4 | 1.124 | - | - |
| 1.1875 | 1.575 | 0.769 | 0.150 | 7/16 - 14 x 2-1/16 | 2.016 | - | - | - | - |
| 1.2500 | 1.575 | 0.769 | 0.150 | 7/16 - 14 x 2-1/16 | 2.016 | - | - | - | - |
| 1.3750 | 1.772 | 0.946 | 0.197 | 5/8 - 11 x 1-1/2 | 1.461 | 5/8 - 11 x 2-1/4 | 2.211 | 5/8 - 11 x 1 | 0.961 |
| 1.4375 | 1.772 | 0.946 | 0.197 | 5/8 - 11 x 1-1/2 | 1.461 | 5/8 - 11 x 2-1/4 | 2.211 | 5/8 - 11 x 1 | 0.961 |
| 1.5000 | 1.772 | 0.946 | 0.197 | 5/8 - 11 x 1-1/2 | 1.461 | 5/8 - 11 x 2-1/4 | 2.211 | 5/8 - 11 x 1 | 0.961 |
| 1.6250 | 2.165 | 0.927 | 0.315 | 5/8 - 11 x 2 | 2.000 | 5/8 - 11 x 1-1/2 | 1.500 | - | - |
| 1.6875 | 2.165 | 0.927 | 0.315 | 5/8 - 11 x 2 | 2.000 | 5/8 - 11 x 1-1/2 | 1.500 | - | - |
| 1.9375 | 2.362 | 0.966 | 0.315 | 5/8 - 11 x 2-1/4 | 2.000 | - | - | - | - |
| 2.0000 | 2.559 | 0.971 | 0.315 | 5/8 - 11 x 2-1/4 | 2.250 | - | - | - | - |
| 2.0625 | 2.559 | 0.971 | 0.315 | 5/8 - 11 x 2-1/4 | 2.250 | - | - | - | - |
| 2.1875 | 2.559 | 0.971 | 0.315 | 5/8 - 11 x 2-1/4 | 2.250 | - | - | - | - |
| 2.3750 | 2.953 | 1.129 | 0.354 | 3/4 - 10 x 2-1/2 | 2.500 | - | - | - | - |
| 2.4375 | 2.953 | 1.129 | 0.354 | 3/4 - 10 x 2-1/2 | 2.500 | - | - | - | - |
| 2.7500 | 3.740 | 1.132 | 0.354 | 3/4 - 10 x 2-1/2 | 2.500 | - | - | - | - |
| 2.9375 | 3.740 | 1.132 | 0.354 | 3/4 - 10 x 2-1/2 | 2.500 | - | - | - | - |
| 3.1875 | 3.740 | 1.132 | 0.354 | 3/4 - 10 x 2-1/2 | 2.500 | - | - | - | - |
| 3.2500 | 4.106 | 1.132 | 0.354 | 3/4 - 10 x 2-1/2 | 2.500 | - | - | - | - |
| 3.4375 | 4.106 | 1.132 | 0.354 | 3/4 - 10 x 2-1/2 | 2.500 | - | - | - | - |
| 3.9375 | 4.724 | 1.299 | 0.394 | 7/8 - 9 x 3-1/2 | 3.500 | - | - | - | - |
| 4.0000 | 4.724 | 1.299 | 0.394 | 7/8 - 9 x 3-1/2 | 3.500 | - | - | - | - |
| 4.0625 | 4.724 | 1.299 | 0.394 | 7/8 - 9 x 3-1/2 | 3.500 | - | - | - | - |
| 4.4375 | 5.315 | 1.299 | 0.386 | 7/8 - 9 x 3-1/2 | 3.500 | - | - | - | - |
| 4.7500 | 5.906 | 1.299 | 0.394 | 7/8 - 9 x 3-1/2 | 3.500 | - | - | - | - |
| 4.9375 | 5.906 | 1.299 | 0.394 | 7/8 - 9 x 3-1/2 | 3.500 | - | - | - | - |

Standard snap ring groove is machined into input (motor) side of hollow shaft.
Fixing element can be installed into opposite side but requires a special shaft. Consult NORD.

**Metric Hollow Bore (mm)**

| UH | D | a | a2 | Screw ❶ | a3 ❶ | Screw ❷ | a3 ❷ |
|---|---|---|---|---|---|---|---|
| 25 | 38 | 19 | 3.8 | M10 x 45 | 41.8 | M10 x 30 | 26.8 |
| 30 | 40 | 19 | 3.8 | M10 x 45 | 43.8 | M10 x 30 | 28.8 |
| 35 | 45 | 23.5 | 5 | M12 x 55 | 54 | M12 x 35 | 34 |
| 40 | 55 | 23.7 | 8 | M16 x 70 | 70 | M16 x 45 | 45 |
| 50 | 65 | 24.7 | 8 | M16 x 70 | 70 | M16 x 45 | 45 |
| 60 | 75 | 29 | 9 | M20 x 90 | 90 | M20 x 55 | 55 |
| 70 | 95 | 29.3 | 9 | M20 x 90 | 90 | M20 x 55 | 55 |
| 80 | 102 | 29 | 9 | M20 x 100 | 100 | M20 x 55 | 55 |
| 100 | 120 | 34.5 | 10 | M24 x 110 | 110 | M24 x 65 | 65 |
| 120 | 150 | 34.5 | 10 | M24 x 110 | 110 | M24 x 65 | 65 |

❶, ❷, ❸ - Each fixing element kit may contain up to 3 different kinds of screws


Send Quote Requests to info@automatedpt.com
Call +1(800)985-6929 To Order or Order Online At Nordgearmotors.com

Send Quote Requests to info@automatedpt.com
Call +1(800)985-6929 To Order or Order Online At Nordgearmotors.com

# Right-angle Helical-bevel Gearmotors

## Selection

- Order Form
- Unit Examples
- 0.16 hp
- 0.25 hp
- 0.33 hp
- 0.50 hp
- 0.75 hp
- 1.0 hp
- 1.5 hp
- 2.0 hp
- 3.0 hp
- 5.0 hp
- 7.5 hp
- 10 hp
- 15 hp
- 20 hp
- 25 hp
- 30 hp
- 40 hp
- 50 hp
- 60 hp
- 75 hp
- 100 hp
- 125 hp
- 150 hp
- 175 hp
- 200 hp

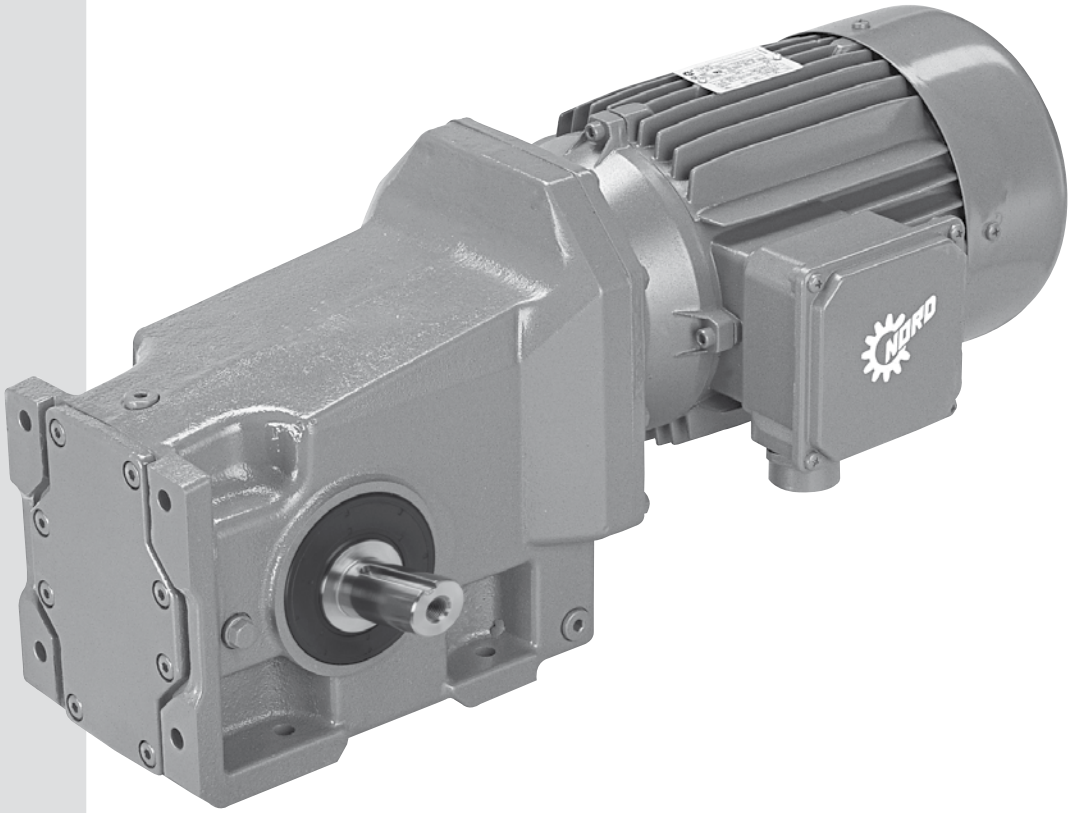

NORD® DRIVESYSTEMS

UNICASE™

www.nord.com

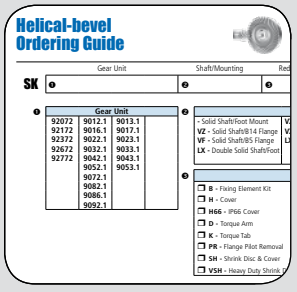


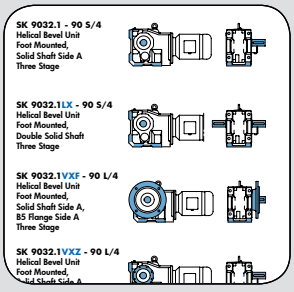


| Motor Power $P_n$ | Output Speed $n_2$ | Output Torque $T_a$ | Service Factor $f_B$ | AGMA Class | Gear Ratio $i_{tot}$ |
|---|---|---|---|---|---|
| [hp] | [rpm] | [lb-in] | | | |
| 15 | 65 | 14614 | 2.8 | III | 27.35 |
| | 57 | 16714 | 2.5 | III | 31.28 |
| | 49 | 19348 | 2.2 | III | 36.21 |
| | 45 | 21223 | 2 | III | 39.72 |
| | 39 | 24023 | 1.8 | II | 44.96 |
| | 32 | 29153 | 1.5 | II | 54.56 |
| | 28 | 33352 | 1.3 | I | 62.42 |
| | 25 | 38599 | 1.1 | I | 72.24 |
| | 20 | 47111 | 0.9 | * | 88.17 |
| | 50 | 18803 | 3.3 | III | 35.19 |
| | 43 | 21966 | 3.1 | III | 41.11 |
| | 35 | 26903 | 2.7 | III | 50.35 |

Send Quote Requests to info@automatedpt.com
Call +1(800)985-6929 To Order or Order Online At Nordgearmotors.com

# Helical-bevel Ordering Guide



DRIVESYSTEMS

| | Gear Unit | Shaft/Mounting | Reducer Options | | Motor/Input | Motor Options |
|---|---|---|---|---|---|---|
| **SK** | ❶ | ❷ | ❸ | - | ❹ | |
| | | | | | see page 690 | see page 690 |

❶

| Gear Unit | | | |
|---|---|---|---|
| 92072 | 9012.1 | 9013.1 | 9072.1/32 |
| 92172 | 9016.1 | 9017.1 | 9072.1/42 |
| 92372 | 9022.1 | 9023.1 | 9082.1/42 |
| 92672 | 9032.1 | 9033.1 | 9082.1/52 |
| 92772 | 9042.1 | 9043.1 | 9086.1/52 |
| | 9052.1 | 9053.1 | 9092.1/52 |
| | 9072.1 | | 9096.1/62 |
| | 9082.1 | | |
| | 9086.1 | | |
| | 9092.1 | | |
| | 9096.1 | | |

❷

| Shaft/Mounting | | |
|---|---|---|
| - Solid Shaft/Foot Mount | **VXZ -** Solid Shaft/Foot/B14 Flange | **AZ** - Hollow Shaft/B14 Flange |
| **VZ -** Solid Shaft/B14 Flange | **VXF -** Solid Shaft/Foot/B5 Flange | **AF** - Hollow Shaft/B5 Flange |
| **VF -** Solid Shaft/B5 Flange | **LXZ -** Double Solid Shaft/Foot/ B14 Flange | **AX** - Hollow Shaft/Foot Mount |
| **LX -** Double Solid Shaft/Foot | | **AXZ -** Hollow Shaft/Footed/B14 Flange |
| | | **AXF -** Hollow Shaft/Footed/B5 Flange |

❸

| Reducer Options | | |
|---|---|---|
| ❒ **B -** Fixing Element Kit | ❒ **VL -** Heavy Duty Output Bearings | ❒ **VI -** Flouro-rubber Seals |
| ❒ **H -** Hollow Shaft Cover | ❒ **VL2 -** Spread Bearing Design | ❒ **OSG -** Oil Sight Glass |
| ❒ **H66 -** IP66 Hollow Shaft Cover | ❒ **VL3 -** Oil Safe Spread Bearings | ❒ **OA -** Oil Expansion Chamber |
| ❒ **D -** Torque Arm | ❒ **VL4 -** Drywell | ❒ **OC -** Oil Cooler |
| ❒ **K -** Bottom Mount Torque Arm | ❒ **SM5 -** Stainless Steel Shaft | ❒ **WC -** Water Cooling Cover |
| ❒ **PR -** Flange Pilot Removal | ❒ **SWA -** Special Hollow Shaft | ❒ **LL -** Long Term Storage |
| ❒ **SH -** Shrink Disc & Cover | ❒ **SWV -** Special Solid Shaft | ❒ **MDP -** Magnetic Drain Plug |
| ❒ **VSH -** Heavy Duty Shrink Disc & Cover | ❒ **R -** Backstop | ❒ **ADP -** Additional Drain Plug |

❹

| Input Shaft | NEMA Adapter | IEC Adapter | Integral Motors | | Integral Energy Efficent Motors | | Scoop | Motor Platform | Servo Adapter (Keyed) |
|---|---|---|---|---|---|---|---|---|---|
| W | N56C | IEC 63 | **63S/4** - 0.16hp | **160L/4** - 20hp | **80LH/4** - 1hp | **200LH/4** - 40hp | S56 | MKN056 | SEP 100 |
| | N140TC | IEC 71 | **63L/4** - 0.25hp | **180MX/4** - 25hp | **90SH/4** - 1.5hp | **225SH/4** - 50hp | S140T | MKN140 | SEP 130 |
| | N180TC | IEC 80 | **71S/4** - 0.33hp | **180LX/4** - 30hp | **90LH/4** - 2hp | **2525MH/4** - 60hp | S180T | MKN180 | SEP 165 |
| | N210TC | IEC 90 | **71L/4** - 0.50hp | **200L/4** - 40hp | **100LH/4** - 3hp | **250MH/4** - 75hp | S210T | MKN210 | SEP 215 |
| | N250TC | IEC 100 | **80S/4** - 0.75hp | **225S/4** - 50hp | **112MH/4** - 5hp | **280SH/4** - 100hp | S250T | MKN250 | SEP 300 |
| | N280TC | IEC 112 | **80L/4** - 1hp | **2525M/4** - 60hp | **132SH/4** - 7.5hp | **280MH/4** - 125hp | S280T | MKN280 | Servo Adapter (Clamp) |
| | N320TC | IEC 132 | **90S/4** - 1.5hp | **250M/4** - 75hp | **132MH/4** - 10hp | **315SH/4** - 150hp | S320T | MKN320 | |
| | N360TC | IEC 160 | **90L/4** - 2hp | **280S/4** - 100hp | **160MH/4** - 15hp | **315MH/4** - 175hp | S360T | MKN360 | SEK 100 |
| | N400TC | IEC 180 | **100L/4** - 3hp | **280M/4** - 125hp | **160LH/4** - 20hp | **315MAH/4** - 200hp | S400T | MKN400 | SEK 130 |
| | | IEC 200 | **100LA/4** - 5hp | **315S/4** - 150hp | **180MH/4** - 25hp | **315LH/4** - 250hp | | | SEK 165 |
| | | IEC 225 | **112M/4** - 5.4hp | **315M/4** - 175hp | **180LH/4** - 30hp | | | | SEK 215 |
| | | IEC 250 | **132S/4** - 7.5hp | **315MA/4** - 200hp | | | | | SEK 300 |
| | | IEC 280 | **132M/4** - 10hp | **315L/4** - 250hp | | | | | |
| | | IEC 315 | **160M/4** - 15hp | Other Speeds Available | | Other Speeds Available | | | |

## Product Specifications

**Ratio**

_____ :1

see pages 398 - 446

**OR**

**Output Speed**

_____ rpm

see pages 398 - 446

**Mounting Position**

- ❍ M1
- ❍ M2
- ❍ M3
- ❍ M4
- ❍ M5
- ❍ M6
- ❍ Special _____

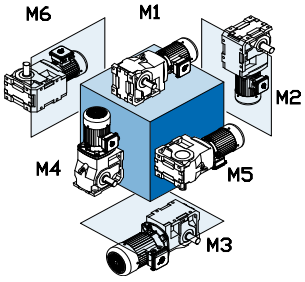


**Paint**

- ❍ Standard Stainles Steel Paint
- ❍ NSD+ (gray)
- ❍ NSD+W (white)
- ❍ NSD-X3 (gray)
- ❍ NSD-X3W (white)
- ❍ Casting Primed
- ❍ Special _____

**Lubricant**

- ❍ Standard
- ❍ Synthetic
- ❍ Food Grade
- ❍ Other _____

**Solid Shaft Side** (if required)

- ❍ Shaft Side A
- ❍ Shaft Side B
- ❍ Shaft Side A&B

see page 18

**Hollow Shaft Diameter** (if required)

_____

see pages 566 - 573

**B5 Flange Side** (if required)

- ❍ Flange Side A
- ❍ Flange Side B
- ❍ Flange Side A&B

see page 18

**B5 Flange Diameter** (if required)

_____

**Torque Arm Side & Location** (if required)

- ❍ Side A
- ❍ Side B

_____ Location

see page 18

**Shrink Disc Side** (if required)

- ❍ Side A
- ❍ Side B

see page 18

**H66 Side** (if required)

- ❍ H66 Side A
- ❍ H66 Side B

see page 18

## Gearmotor Only Details

**Voltage & Frequency**

- ❍ 230/460V-60Hz (460V only ≥ 40 hp)
- ❍ 575V-60Hz
- ❍ 208V-60Hz
- ❍ 400V-50Hz
- ❍ 115/230V-60Hz, 1 ph.
- ❍ Other _____

**Terminal Box Pos.**

- ❍ TB1
- ❍ TB2
- ❍ TB3
- ❍ TB4

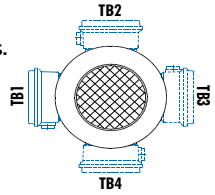


Mtg. Pos. M1 Shown

**Conduit Entry Loc.**

- ❍ CE I *
- ❍ CE II
- ❍ CE III *
- ❍ CE IV

* Brakemotor

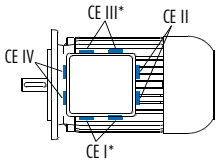


Mtg. Pos. M1 Shown


Send Quote Requests to info@automatedpt.com
Call +1(800)985-6929 To Order or Order Online At Nordgearmotors.com

DRIVESYSTEMS

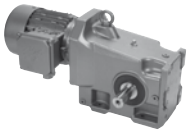

# Unit Examples

## Examples of Available Helical-bevel Units with Solid Shaft Design

**SK 9032.1 - 90 S/4**
Helical Bevel Unit
Foot Mounted,
Solid Shaft Side A
Three Stage

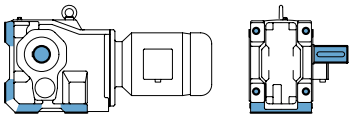

**SK 9032.1LX - 90 S/4**
Helical Bevel Unit
Foot Mounted,
Double Solid Shaft
Three Stage

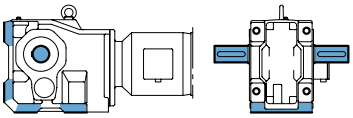

**SK 9032.1VXF - 90 L/4**
Helical Bevel Unit
Foot Mounted,
Solid Shaft Side A,
B5 Flange Side A
Three Stage

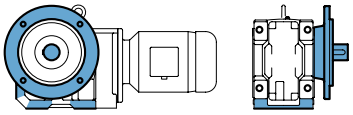

**SK 9032.1VXZ - 90 L/4**
Helical Bevel Unit
Foot Mounted,
Solid Shaft Side A
B14 Flange Side A & B
Three Stage

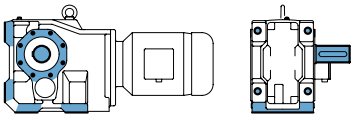

**SK 9032.1VF - 90 L/4**
Helical Bevel Unit
Solid Shaft Side A
B5 Flange Side A
Three Stage

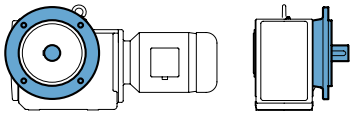

**SK 9032.1VZ - 90 L/4**
Helical Bevel Unit
Solid Shaft Side A
B14 Flange Side A & B
Three Stage

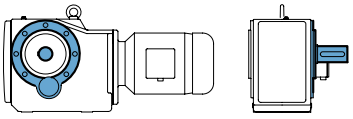

**SK 9032.1LXZ - 90 L/4**
Helical Bevel Unit
Double Solid Shaft
B14 Flange Side A & B
Three Stage

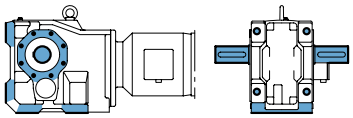

## Examples of Available Helical-bevel Units with Hollow Shaft Design

**SK 9032.1AZ - 90 S/4**
Helical Bevel Unit
Hollow Shaft,
B14 Flange Side A & B
Three Stage

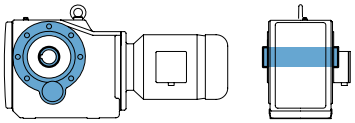

**SK 9032.1AF - 90 S/4**
Hollow Shaft,
B5 Flange Side A
Three Stage

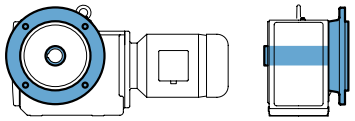

**SK 9032.1AX - 90 L/4**
Helical Bevel Unit
Hollow Shaft,
Foot Mounted
Three Stage

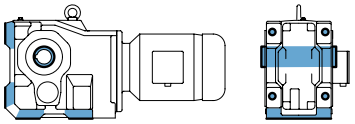

**SK 9032.1AXZ - 90 L/4**
Helical Bevel Unit
Hollow Shaft, Foot Mounted,
B14 Flange Side A & B
Three Stage

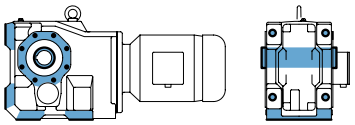

**SK 9032.1AXF - 90 L/4**
Helical Bevel Unit
Hollow Shaft, Foot Mounted,
B5 Flange Side A
Three Stage

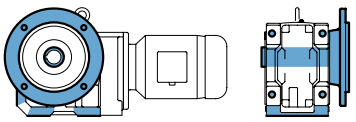

**SK 9032.1AZSH - 90 L/4**
Helical Bevel Unit
Hollow Shaft,
B14 Flange Side A & B,
Shrink Disc & Cover Side B
Three Stage

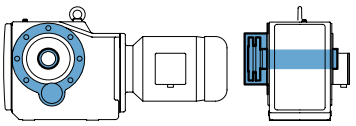

**SK 9032.1AZD - 90 L/4**
Helical Bevel Unit
Hollow Shaft,
B14 Flange Side A & B
Torque Arm Side A at 180°
Three Stage

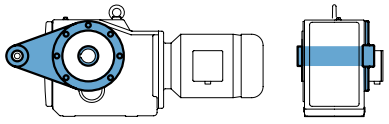

**SK 9032.1AZK - 90 L/4**
Helical Bevel Unit
Hollow Shaft,
B14 Flange Side A & B
Bottom Mount Torque Arm Side A
Three Stage

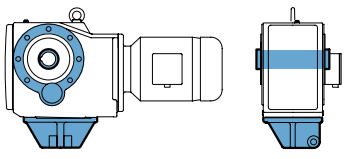

GEARMOTORS


Send Quote Requests to info@automatedpt.com
Call +1(800)985-6929 To Order or Order Online At Nordgearmotors.com

# 0.16 hp Gearmotors



DRIVESYSTEMS

| Motor Power $P_n$ [hp] | Output Speed $n_2$ [rpm] | Output Torque $T_2$ [lb-in] | Service Factor $f_B$ | AGMA Class | Gear Ratio $i_{tot}$ | Standard Bearings $F_{RN}$ OHL [lb] | Standard Bearings $F_{AN}$ Thrust [lb] | Heavy Duty Bearings (VL) $F_{RVL}$ OHL [lb] | Heavy Duty Bearings (VL) $F_{AVL}$ Thrust [lb] | Model Type | Weight [lb] | Dim. Page |
|---|---|---|---|---|---|---|---|---|---|---|---|---|
| 0.16 | 442 | 23 | 18.9 | III | 3.85 | 610 | 864 | | | SK 92072 - 63S/4 | 19 | 464 |
| | 324 | 31 | 16.8 | III | 5.24 | 673 | 979 | | | | | |
| | 294 | 35 | 18.8 | III | 5.79 | 695 | 1024 | | | | | |
| | 264 | 38 | 15.4 | III | 6.44 | 718 | 1069 | | | | | |
| | 216 | 47 | 16.8 | III | 7.87 | 738 | 1148 | | | | | |
| | 189 | 54 | 14.9 | III | 8.99 | 738 | 1148 | | | | | |
| | 176 | 58 | 13.8 | III | 9.68 | 738 | 1148 | | | | | |
| | 154 | 66 | 12.1 | III | 11.06 | 738 | 1148 | | | | | |
| | 125 | 81 | 8.2 | III | 13.55 | 738 | 1148 | | | | | |
| | 97 | 105 | 5.1 | III | 17.56 | 736 | 1148 | | | | | |
| | 83 | 122 | 6.6 | III | 20.37 | 736 | 1148 | | | | | |
| | 73 | 139 | 5.7 | III | 23.28 | 736 | 1148 | | | | | |
| | 64 | 157 | 5.1 | III | 26.39 | 734 | 1148 | | | | | |
| | 56 | 180 | 3.4 | III | 30.15 | 734 | 1148 | | | | | |
| | 49 | 207 | 3.2 | III | 34.73 | 731 | 1148 | | | | | |
| | 43 | 237 | 3.0 | III | 39.67 | 729 | 1148 | | | | | |
| | 36 | 285 | 1.4 | II | 47.83 | 725 | 1148 | | | | | |
| | 31 | 326 | 1.4 | II | 54.65 | 722 | 1148 | | | | | |
| | 415 | 24 | 21.3 | III | 4.1 | 729 | 1008 | | | SK 92172 - 63S/4 | 30 | 468 |
| | 356 | 28 | 20.2 | III | 4.77 | 767 | 1071 | | | | | |
| | 319 | 32 | 19.7 | III | 5.33 | 767 | 1121 | | | | | |
| | 281 | 36 | 18.8 | III | 6.04 | 767 | 1184 | | | | | |
| | 241 | 42 | 20.0 | III | 7.04 | 767 | 1260 | | | | | |
| | 212 | 48 | 18.5 | III | 8.01 | 765 | 1260 | | | | | |
| | 187 | 54 | 17.2 | III | 9.07 | 765 | 1260 | | | | | |
| | 164 | 62 | 15.7 | III | 10.37 | 765 | 1260 | | | | | |
| | 144 | 70 | 14.4 | III | 11.81 | 765 | 1260 | | | | | |
| | 126 | 80 | 13.2 | III | 13.49 | 765 | 1260 | | | | | |
| | 109 | 93 | 11.4 | III | 15.61 | 765 | 1260 | | | | | |
| | 90 | 112 | 6.7 | III | 18.79 | 765 | 1260 | | | | | |
| | 60 | 168 | 6.3 | III | 28.24 | 763 | 1260 | | | | | |
| | 53 | 193 | 5.5 | III | 32.27 | 761 | 1260 | | | | | |
| | 47 | 215 | 4.1 | III | 36.11 | 758 | 1260 | | | | | |
| | 41 | 246 | 4.1 | III | 41.26 | 758 | 1260 | | | | | |
| | 36 | 280 | 2.4 | III | 46.9 | 754 | 1260 | | | | | |
| | 32 | 320 | 2.5 | III | 53.59 | 752 | 1260 | | | | | |
| | 27 | 378 | 1.2 | I | 63.29 | 745 | 1260 | | | | | |
| | 24 | 431 | 1.1 | I | 72.31 | 738 | 1260 | | | | | |
| | 50 | 202 | 8.1 | III | 33.8 | 1064 | 2025 | | | SK 92372 - 63S/4 | 43 | 472 |
| | 44 | 230 | 7.3 | III | 38.62 | 1062 | 2025 | | | | | |
| | 39 | 260 | 5.1 | III | 43.52 | 1062 | 2025 | | | | | |
| | 34 | 297 | 5.1 | III | 49.73 | 1060 | 2025 | | | | | |
| | 31 | 328 | 3.0 | III | 55 | 1060 | 2025 | | | | | |
| | 27 | 375 | 3.0 | III | 62.85 | 1058 | 2025 | | | | | |

(AGMA Class I = $f_B$ 1.0 - 1.39 II = $f_B$ 1.4 - 1.99 III = $f_B$ ≥ 2.0 * = $f_B$ < 1.0)


Send Quote Requests to info@automatedpt.com
Call +1(800)985-6929 To Order or Order Online At Nordgearmotors.com

DRIVESYSTEMS

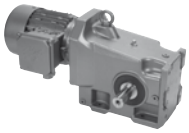



# 0.16 hp Gearmotors

| Motor Power $P_n$ [hp] | Output Speed $n_2$ [rpm] | Output Torque $T_2$ [lb-in] | Service Factor $f_B$ | AGMA Class | Gear Ratio $i_{tot}$ | Standard Bearings $F_{R\,N}$ OHL [lb] | Standard Bearings $F_{A\,N}$ Thrust [lb] | Heavy Duty Bearings (VL) $F_{R\,VL}$ OHL [lb] | Heavy Duty Bearings (VL) $F_{A\,VL}$ Thrust [lb] | Model Type | Weight [lb] | Dim. Page |
|---|---|---|---|---|---|---|---|---|---|---|---|---|
| **0.16** | 210 | 48 | 26.1 | III | 8.09 | 1636 | 3224 | 2025 | 3224 | **SK 9012.1 - 63S/4** | 74 | 484 |
| | 184 | 55 | 25.3 | III | 9.23 | 1636 | 3350 | 2025 | 3350 | | | |
| | 157 | 65 | 24.4 | III | 10.85 | 1636 | 3515 | 2025 | 3515 | | | |
| | 139 | 73 | 23.5 | III | 12.23 | 1636 | 3641 | 2025 | 3641 | | | |
| | 111 | 91 | 26.1 | III | 15.3 | 1636 | 3902 | 2025 | 3902 | | | |
| | 97 | 104 | 25.3 | III | 17.45 | 1636 | 4055 | 2025 | 4055 | | | |
| | 81 | 125 | 25.3 | III | 20.87 | 1636 | 4275 | 2025 | 4275 | | | |
| | 69 | 146 | 24.2 | III | 24.53 | 1636 | 4478 | 2025 | 4478 | | | |
| | 61 | 165 | 21.5 | III | 27.65 | 1636 | 4500 | 2025 | 4500 | | | |
| | 54 | 188 | 18.9 | III | 31.45 | 1636 | 4500 | 2025 | 4500 | | | |
| | 49 | 208 | 17.0 | III | 34.81 | 1636 | 4500 | 2025 | 4500 | | | |
| | 41 | 248 | 14.2 | III | 41.65 | 1636 | 4500 | 2025 | 4500 | | | |
| | 35 | 292 | 12.1 | III | 48.95 | 1634 | 4500 | 2025 | 4500 | | | |
| | 31 | 329 | 10.8 | III | 55.17 | 1634 | 4500 | 2025 | 4500 | | | |
| | 27 | 374 | 9.5 | III | 62.74 | 1631 | 4500 | 2025 | 4500 | | | |
| | 22 | 457 | 7.8 | III | 76.53 | 1629 | 4500 | 2025 | 4500 | | | |
| | 20 | 513 | 6.9 | III | 86 | 1629 | 4500 | 2025 | 4500 | | | |
| | 17 | 581 | 6.1 | III | 97.36 | 1627 | 4500 | 2025 | 4500 | | | |
| | 14 | 737 | 4.8 | III | 123.48 | 1618 | 4500 | 2025 | 4500 | | | |
| | 12 | 839 | 4.2 | III | 140.7 | 1613 | 4500 | 2025 | 4500 | | | |
| | 10 | 994 | 3.6 | III | 166.59 | 1604 | 4500 | 2025 | 4500 | | | |
| | 8.3 | 1229 | 2.9 | III | 205.93 | 1586 | 4500 | 2025 | 4500 | | | |
| | 6.9 | 1470 | 2.4 | III | 246.37 | 1564 | 4500 | 2025 | 4500 | | | |
| | 6.1 | 1675 | 2.1 | III | 280.71 | 1541 | 4500 | 2025 | 4500 | | | |
| | 5.1 | 1983 | 1.8 | II | 332.37 | 1501 | 4500 | 2025 | 4500 | | | |
| | 5.3 | 1913 | 1.9 | II | 320.6 | 1510 | 4500 | 2025 | 4500 | **SK 9013.1 - 63S/4** | 85 | 488 |
| | 3.9 | 2622 | 1.4 | II | 439.46 | 1388 | 4500 | 2025 | 4500 | | | |
| | 2.9 | 3520 | 1.0 | I | 589.96 | 1152 | 4500 | 1942 | 4500 | | | |
| | 2.5 | 3985 | 0.9 | * | 667.89 | 974 | 4500 | 1843 | 4500 | | | |
| | 2 | 4425 | 0.8 | * | 847.07 | 738 | 4500 | 1728 | 4500 | | | |
| | 1.4 | 4425 | 0.8 | * | 1256.07 | 738 | 4500 | 1728 | 4500 | | | |
| | 1.2 | 4425 | 0.8 | * | 1412.68 | 738 | 4500 | 1728 | 4500 | | | |
| | 1 | 4425 | 0.8 | * | 1690.1 | 738 | 4500 | 1728 | 4500 | | | |
| | 4.6 | 2191 | 2.5 | III | 367.33 | 2025 | 4500 | 2025 | 4500 | **SK 9017.1 - 63S/4** | 87 | 496 |
| | 3.4 | 2942 | 1.8 | II | 493.12 | 2025 | 4500 | 2025 | 4500 | | | |
| | 3 | 3330 | 1.6 | II | 558.25 | 2025 | 4500 | 2025 | 4500 | | | |
| | 2.7 | 3756 | 1.4 | II | 629.56 | 1967 | 4500 | 2025 | 4500 | | | |
| | 1.4 | 6748 | 0.8 | * | 1256.07 | 1161 | 4500 | 2025 | 4500 | | | |
| | 1.2 | 6748 | 0.8 | * | 1412.69 | 1161 | 4500 | 2025 | 4500 | | | |
| | 3.6 | 2818 | 2.7 | III | 472.43 | 1976 | 2700 | 2700 | 5625 | **SK 9023.1 - 63S/4** | 103 | 504 |
| | 3 | 3350 | 2.3 | III | 561.55 | 1910 | 2700 | 2700 | 5625 | | | |
| | 2.5 | 4047 | 1.9 | II | 678.31 | 1805 | 2700 | 2700 | 5625 | | | |
| | 2.3 | 4497 | 1.7 | II | 753.86 | 1721 | 2700 | 2651 | 5625 | | | |
| | 1.8 | 5679 | 1.3 | I | 951.94 | 1429 | 2700 | 2471 | 5625 | | | |
| | 1.5 | 6684 | 1.1 | I | 1120.38 | 1044 | 2700 | 2270 | 5625 | | | |
| | 1.1 | 9514 | 0.8 | * | 1504.07 | - | 2700 | 1280 | 5625 | | | |

(AGMA Class I = $f_B$ 1.0 - 1.39 II = $f_B$ 1.4 - 1.99 III = $f_B$ ≥ 2.0 * = $f_B$ < 1.0)


Send Quote Requests to info@automatedpt.com
Call +1(800)985-6929 To Order or Order Online At Nordgearmotors.com

# 0.16, 0.25 hp Gearmotors



DRIVESYSTEMS

| Motor Power | Output Speed | Output Torque | Service Factor | AGMA Class | Gear Ratio | Standard Bearings | | Heavy Duty Bearings (VL) | | Model Type | Weight | Dim. Page |
|---|---|---|---|---|---|---|---|---|---|---|---|---|
| $P_n$ | $n_2$ | $T_2$ | $f_B$ | | $i_{tot}$ | $F_{RN}$ OHL | $F_{AN}$ Thrust | $F_{RVL}$ OHL | $F_{AVL}$ Thrust | | lb | |
| [hp] | [rpm] | [lb-in] | | | | [lb] | [lb] | [lb] | [lb] | | [lb] | |
| **0.16** | 3.2 | 3216 | 4.3 | III | 539.1 | 3362 | 3263 | 3375 | 6417 | **SK 9033.1 - 63S/4** | 153 | 512 |
| | 2.5 | 4126 | 3.3 | III | 691.55 | 3317 | 3263 | 3375 | 6750 | | | |
| | 1.9 | 5212 | 2.6 | III | 873.65 | 3245 | 3263 | 3375 | 6750 | | | |
| | 1.5 | 6860 | 2.0 | III | 1149.8 | 3098 | 3263 | 3375 | 6750 | | | |
| | 1.2 | 8122 | 1.7 | II | 1361.37 | 2954 | 3263 | 3375 | 6750 | | | |
| **0.25** | 436 | 36 | 12.0 | III | 3.85 | 608 | 855 | | | **SK 92072 - 63L/4** | 20 | 464 |
| | 321 | 50 | 10.5 | III | 5.24 | 668 | 968 | | | | | |
| | 290 | 55 | 11.8 | III | 5.79 | 691 | 1015 | | | | | |
| | 261 | 62 | 9.6 | III | 6.44 | 716 | 1053 | | | | | |
| | 213 | 75 | 10.5 | III | 7.87 | 738 | 1148 | | | | | |
| | 187 | 86 | 9.3 | III | 8.99 | 738 | 1148 | | | | | |
| | 174 | 93 | 8.6 | III | 9.68 | 738 | 1148 | | | | | |
| | 152 | 106 | 7.5 | III | 11.06 | 736 | 1148 | | | | | |
| | 124 | 130 | 5.1 | III | 13.55 | 736 | 1148 | | | | | |
| | 96 | 168 | 3.2 | III | 17.56 | 734 | 1148 | | | | | |
| | 82 | 195 | 4.1 | III | 20.37 | 734 | 1148 | | | | | |
| | 72 | 223 | 3.6 | III | 23.28 | 731 | 1148 | | | | | |
| | 64 | 252 | 3.2 | III | 26.39 | 729 | 1148 | | | | | |
| | 56 | 288 | 2.1 | III | 30.15 | 725 | 1148 | | | | | |
| | 48 | 332 | 2.0 | III | 34.73 | 720 | 1148 | | | | | |
| | 42 | 379 | 1.9 | II | 39.67 | 716 | 1148 | | | | | |
| | 410 | 39 | 13.3 | III | 4.1 | 729 | 1001 | | | **SK 92172 - 63L/4** | 31 | 468 |
| | 352 | 46 | 12.6 | III | 4.77 | 763 | 1064 | | | | | |
| | 315 | 51 | 12.3 | III | 5.33 | 765 | 1116 | | | | | |
| | 278 | 58 | 11.8 | III | 6.04 | 765 | 1175 | | | | | |
| | 239 | 67 | 12.5 | III | 7.04 | 765 | 1253 | | | | | |
| | 210 | 77 | 11.6 | III | 8.01 | 765 | 1260 | | | | | |
| | 185 | 87 | 10.7 | III | 9.07 | 765 | 1260 | | | | | |
| | 162 | 99 | 9.8 | III | 10.37 | 765 | 1260 | | | | | |
| | 142 | 113 | 9.0 | III | 11.81 | 765 | 1260 | | | | | |
| | 125 | 129 | 8.2 | III | 13.49 | 765 | 1260 | | | | | |
| | 108 | 149 | 7.1 | III | 15.61 | 763 | 1260 | | | | | |
| | 89 | 180 | 4.2 | III | 18.79 | 761 | 1260 | | | | | |
| | 59 | 270 | 3.9 | III | 28.24 | 756 | 1260 | | | | | |
| | 52 | 308 | 3.4 | III | 32.27 | 752 | 1260 | | | | | |
| | 47 | 345 | 2.6 | III | 36.11 | 747 | 1260 | | | | | |
| | 41 | 394 | 2.6 | III | 41.26 | 743 | 1260 | | | | | |
| | 36 | 448 | 1.5 | II | 46.9 | 736 | 1260 | | | | | |
| | 31 | 512 | 1.6 | II | 53.59 | 725 | 1260 | | | | | |
| | 50 | 323 | 5.1 | III | 33.8 | 1060 | 2025 | | | **SK 92372 - 63L/4** | 45 | 472 |
| | 44 | 369 | 4.6 | III | 38.62 | 1058 | 2025 | | | | | |
| | 39 | 416 | 3.2 | III | 43.52 | 1055 | 2025 | | | | | |
| | 34 | 475 | 3.2 | III | 49.73 | 1051 | 2025 | | | | | |
| | 31 | 526 | 1.9 | II | 55 | 1049 | 2025 | | | | | |
| | 27 | 601 | 1.8 | II | 62.85 | 1042 | 2025 | | | | | |

(AGMA Class I = $f_B$ 1.0 - 1.39 II = $f_B$ 1.4 - 1.99 III = $f_B$ ≥ 2.0 * = $f_B$ < 1.0)


Send Quote Requests to info@automatedpt.com
Call +1(800)985-6929 To Order or Order Online At Nordgearmotors.com

NORD DRIVESYSTEMS

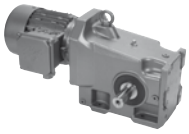



# 0.25 hp Gearmotors

| Motor Power $P_n$ [hp] | Output Speed $n_2$ [rpm] | Output Torque $T_2$ [lb-in] | Service Factor $f_B$ | AGMA Class | Gear Ratio $i_{tot}$ | Standard Bearings $F_{R\,N}$ OHL [lb] | Standard Bearings $F_{A\,N}$ Thrust [lb] | Heavy Duty Bearings (VL) $F_{R\,VL}$ OHL [lb] | Heavy Duty Bearings (VL) $F_{A\,VL}$ Thrust [lb] | Model Type | Weight [lb] | Dim. Page |
|---|---|---|---|---|---|---|---|---|---|---|---|---|
| **0.25** | 32 | 496 | 6.2 | III | 51.86 | 1386 | 2700 | | | **SK 92672 - 63L/4** | 81 | 476 |
| | 28 | 566 | 5.9 | III | 59.25 | 1384 | 2700 | | | | | |
| | 208 | 77 | 16.3 | III | 8.09 | 1636 | 3229 | 2025 | 3229 | **SK 9012.1 - 63L/4** | 75 | 484 |
| | 182 | 88 | 15.8 | III | 9.23 | 1636 | 3355 | 2025 | 3355 | | | |
| | 155 | 104 | 15.2 | III | 10.85 | 1636 | 3521 | 2025 | 3521 | | | |
| | 137 | 117 | 14.7 | III | 12.23 | 1636 | 3641 | 2025 | 3641 | | | |
| | 110 | 146 | 16.3 | III | 15.3 | 1636 | 3902 | 2025 | 3902 | | | |
| | 96 | 167 | 15.8 | III | 17.45 | 1636 | 4048 | 2025 | 4048 | | | |
| | 80 | 199 | 15.8 | III | 20.87 | 1636 | 4275 | 2025 | 4275 | | | |
| | 68 | 234 | 15.1 | III | 24.53 | 1636 | 4471 | 2025 | 4471 | | | |
| | 61 | 264 | 13.4 | III | 27.65 | 1634 | 4500 | 2025 | 4500 | | | |
| | 53 | 301 | 11.8 | III | 31.45 | 1634 | 4500 | 2025 | 4500 | | | |
| | 48 | 333 | 10.6 | III | 34.81 | 1634 | 4500 | 2025 | 4500 | | | |
| | 40 | 398 | 8.9 | III | 41.65 | 1631 | 4500 | 2025 | 4500 | | | |
| | 34 | 468 | 7.6 | III | 48.95 | 1629 | 4500 | 2025 | 4500 | | | |
| | 30 | 527 | 6.7 | III | 55.17 | 1627 | 4500 | 2025 | 4500 | | | |
| | 27 | 600 | 5.9 | III | 62.74 | 1625 | 4500 | 2025 | 4500 | | | |
| | 22 | 732 | 4.8 | III | 76.53 | 1620 | 4500 | 2025 | 4500 | | | |
| | 20 | 822 | 4.3 | III | 86 | 1613 | 4500 | 2025 | 4500 | | | |
| | 17 | 931 | 3.8 | III | 97.36 | 1609 | 4500 | 2025 | 4500 | | | |
| | 14 | 1180 | 3.0 | III | 123.48 | 1591 | 4500 | 2025 | 4500 | | | |
| | 12 | 1345 | 2.6 | III | 140.7 | 1575 | 4500 | 2025 | 4500 | | | |
| | 10 | 1592 | 2.2 | III | 166.59 | 1550 | 4500 | 2025 | 4500 | | | |
| | 8.2 | 1968 | 1.8 | II | 205.93 | 1503 | 4500 | 2025 | 4500 | | | |
| | 6.8 | 2355 | 1.5 | II | 246.37 | 1440 | 4500 | 2025 | 4500 | | | |
| | 6 | 2683 | 1.3 | I | 280.71 | 1377 | 4500 | 2025 | 4500 | | | |
| | 5.1 | 3177 | 1.1 | I | 332.37 | 1258 | 4500 | 2005 | 4500 | | | |
| | 5.2 | 3064 | 1.2 | I | 320.6 | 1287 | 4500 | 2025 | 4500 | **SK 9013.1 - 63L/4** | 86 | 488 |
| | 3.8 | 4201 | 0.8 | * | 439.46 | 871 | 4500 | 1789 | 4500 | | | |
| | 8.2 | 1968 | 2.7 | III | 205.93 | 2025 | 4500 | 2025 | 4500 | **SK 9016.1 - 63L/4** | 78 | 492 |
| | 7.2 | 2243 | 2.3 | III | 234.64 | 2025 | 4500 | 2025 | 4500 | | | |
| | 6 | 2656 | 2.0 | III | 277.84 | 2025 | 4500 | 2025 | 4500 | | | |
| | 4.6 | 3511 | 1.5 | II | 367.33 | 2003 | 4500 | 2025 | 4500 | **SK 9017.1 - 63L/4** | 89 | 496 |
| | 3.4 | 4714 | 1.1 | I | 493.12 | 1793 | 4500 | 2025 | 4500 | | | |
| | 3 | 5336 | 1.0 | I | 558.25 | 1647 | 4500 | 2025 | 4500 | | | |
| | 2.7 | 6018 | 0.9 | * | 629.56 | 1447 | 4500 | 2025 | 4500 | | | |
| | 7.2 | 2226 | 2.8 | III | 232.92 | 2032 | 2700 | 2700 | 4923 | **SK 9022.1 - 63L/4** | 93 | 500 |
| | 6.1 | 2646 | 2.7 | III | 276.86 | 1994 | 2700 | 2700 | 5141 | | | |
| | 7.4 | 2184 | 2.6 | III | 228.47 | 2036 | 2700 | 2700 | 4898 | **SK 9023.1 - 63L/4** | 104 | 504 |
| | 5.6 | 2845 | 2.7 | III | 297.67 | 1973 | 2700 | 2700 | 5231 | | | |
| | 4.9 | 3244 | 2.3 | III | 339.41 | 1924 | 2700 | 2700 | 5402 | | | |

(AGMA Class I = $f_B$ 1.0 - 1.39 II = $f_B$ 1.4 - 1.99 III = $f_B$ ≥ 2.0 * = $f_B$ < 1.0)


Send Quote Requests to info@automatedpt.com
Call +1(800)985-6929 To Order or Order Online At Nordgearmotors.com

# 0.25, 0.33 hp Gearmotors



DRIVESYSTEMS

| Motor Power | Output Speed | Output Torque | Service Factor | AGMA Class | Gear Ratio | Standard Bearings | | Heavy Duty Bearings (VL) | | Model Type | Weight | Dim. Page |
|---|---|---|---|---|---|---|---|---|---|---|---|---|
| $P_n$ | $n_2$ | $T_2$ | $f_B$ | | $i_{tot}$ | $F_{RN}$ OHL | $F_{AN}$ Thrust | $F_{RVL}$ OHL | $F_{AVL}$ Thrust | | lb | |
| [hp] | [rpm] | [lb-in] | | | | [lb] | [lb] | [lb] | [lb] | | [lb] | |
| **0.25** | 3.6 | 4516 | 1.7 | II | 472.43 | 1717 | 2700 | 2648 | 5625 | **SK 9023.1 - 63L/4** | 104 | 504 |
| | 3 | 5368 | 1.4 | II | 561.55 | 1519 | 2700 | 2522 | 5625 | | | |
| | 2.5 | 6484 | 1.2 | I | 678.31 | 1136 | 2700 | 2313 | 5625 | | | |
| | 2.2 | 7206 | 1.1 | I | 753.86 | 731 | 2700 | 2144 | 5625 | | | |
| | 1.8 | 9099 | 0.8 | * | 951.94 | - | 2700 | 1494 | 5625 | | | |
| | 4.8 | 3367 | 4.1 | III | 352.25 | 3355 | 3263 | 3375 | 5607 | **SK 9033.1 - 63L/4** | 155 | 512 |
| | 4.2 | 3812 | 3.6 | III | 398.77 | 3332 | 3263 | 3375 | 5783 | | | |
| | 3.1 | 5153 | 2.7 | III | 539.1 | 3249 | 3263 | 3375 | 6215 | | | |
| | 2.4 | 6610 | 2.1 | III | 691.55 | 3123 | 3263 | 3375 | 6584 | | | |
| | 1.9 | 8351 | 1.6 | II | 873.65 | 2925 | 3263 | 3375 | 6750 | | | |
| | 1.5 | 10990 | 1.2 | I | 1149.8 | 2486 | 3263 | 3375 | 6750 | | | |
| | 1.2 | 13013 | 1.1 | I | 1361.37 | 1985 | 3263 | 3375 | 6750 | | | |
| | 0.92 | 17416 | 0.8 | * | 1822 | - | 3263 | 2887 | 6750 | | | |
| **0.33** | 444 | 47 | 9.2 | III | 3.85 | 601 | 839 | | | **SK 92072 - 71S/4** | 23 | 464 |
| | 326 | 65 | 8.1 | III | 5.24 | 662 | 950 | | | | | |
| | 295 | 72 | 9.1 | III | 5.79 | 682 | 990 | | | | | |
| | 266 | 80 | 7.4 | III | 6.44 | 707 | 1031 | | | | | |
| | 217 | 97 | 8.1 | III | 7.87 | 738 | 1118 | | | | | |
| | 190 | 111 | 7.2 | III | 8.99 | 736 | 1148 | | | | | |
| | 177 | 120 | 6.7 | III | 9.68 | 736 | 1148 | | | | | |
| | 155 | 137 | 5.8 | III | 11.06 | 736 | 1148 | | | | | |
| | 126 | 167 | 4.0 | III | 13.55 | 734 | 1148 | | | | | |
| | 97 | 217 | 2.4 | III | 17.56 | 731 | 1148 | | | | | |
| | 84 | 252 | 3.2 | III | 20.37 | 729 | 1148 | | | | | |
| | 73 | 288 | 2.8 | III | 23.28 | 725 | 1148 | | | | | |
| | 65 | 326 | 2.4 | III | 26.39 | 722 | 1148 | | | | | |
| | 57 | 373 | 1.7 | II | 30.15 | 716 | 1148 | | | | | |
| | 49 | 429 | 1.5 | II | 34.73 | 709 | 1148 | | | | | |
| | 43 | 490 | 1.4 | II | 39.67 | 700 | 1148 | | | | | |
| | 417 | 51 | 10.3 | III | 4.1 | 720 | 986 | | | **SK 92172 - 71S/4** | 34 | 468 |
| | 358 | 59 | 9.7 | III | 4.77 | 756 | 1049 | | | | | |
| | 321 | 66 | 9.5 | III | 5.33 | 765 | 1098 | | | | | |
| | 283 | 75 | 9.1 | III | 6.04 | 765 | 1157 | | | | | |
| | 243 | 87 | 9.7 | III | 7.04 | 765 | 1235 | | | | | |
| | 213 | 99 | 8.9 | III | 8.01 | 765 | 1260 | | | | | |
| | 189 | 112 | 8.3 | III | 9.07 | 765 | 1260 | | | | | |
| | 165 | 128 | 7.6 | III | 10.37 | 765 | 1260 | | | | | |
| | 145 | 146 | 7.0 | III | 11.81 | 763 | 1260 | | | | | |
| | 127 | 167 | 6.4 | III | 13.49 | 763 | 1260 | | | | | |
| | 110 | 193 | 5.5 | III | 15.61 | 761 | 1260 | | | | | |
| | 91 | 232 | 3.2 | III | 18.79 | 758 | 1260 | | | | | |
| | 61 | 349 | 3.0 | III | 28.24 | 747 | 1260 | | | | | |
| | 53 | 399 | 2.7 | III | 32.27 | 743 | 1260 | | | | | |
| | 47 | 446 | 2.0 | III | 36.11 | 736 | 1260 | | | | | |

(AGMA Class I = $f_B$ 1.0 - 1.39 II = $f_B$ 1.4 - 1.99 III = $f_B$ ≥ 2.0 * = $f_B$ < 1.0)


Send Quote Requests to info@automatedpt.com
Call +1(800)985-6929 To Order or Order Online At Nordgearmotors.com

DRIVESYSTEMS

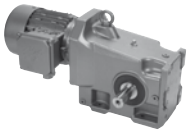



# 0.33 hp Gearmotors

| Motor Power $P_n$ [hp] | Output Speed $n_2$ [rpm] | Output Torque $T_2$ [lb-in] | Service Factor $f_B$ | AGMA Class | Gear Ratio $i_{tot}$ | Standard Bearings $F_{R\,N}$ OHL [lb] | Standard Bearings $F_{A\,N}$ Thrust [lb] | Heavy Duty Bearings (VL) $F_{R\,VL}$ OHL [lb] | Heavy Duty Bearings (VL) $F_{A\,VL}$ Thrust [lb] | Model Type | Weight [lb] | Dim. Page |
|---|---|---|---|---|---|---|---|---|---|---|---|---|
| **0.33** | 41 | 510 | 2 | III | 41.26 | 727 | 1260 | | | **SK 92172 - 71S/4** | 34 | 468 |
| | 36 | 580 | 1.1 | I | 46.9 | 713 | 1260 | | | | | |
| | 32 | 662 | 1.2 | I | 53.59 | 695 | 1260 | | | | | |
| | 51 | 418 | 3.9 | III | 33.8 | 1055 | 2025 | | | **SK 92372 - 71S/4** | 47 | 472 |
| | 44 | 477 | 3.5 | III | 38.62 | 1051 | 2025 | | | | | |
| | 39 | 538 | 2.5 | III | 43.52 | 1046 | 2025 | | | | | |
| | 34 | 614 | 2.4 | III | 49.73 | 1042 | 2025 | | | | | |
| | 31 | 680 | 1.4 | II | 55 | 1035 | 2025 | | | | | |
| | 27 | 777 | 1.4 | II | 62.85 | 1026 | 2025 | | | | | |
| | 33 | 641 | 4.8 | III | 51.86 | 1379 | 2700 | | | **SK 92672 - 71S/4** | 84 | 476 |
| | 29 | 732 | 4.5 | III | 59.25 | 1375 | 2700 | | | | | |
| | 211 | 100 | 12.6 | III | 8.09 | 1636 | 3202 | 2025 | 3202 | **SK 9012.1 - 71S/4** | 78 | 484 |
| | 185 | 114 | 12.2 | III | 9.23 | 1636 | 3328 | 2025 | 3328 | | | |
| | 158 | 134 | 11.8 | III | 10.85 | 1636 | 3492 | 2025 | 3492 | | | |
| | 140 | 151 | 11.4 | III | 12.23 | 1636 | 3611 | 2025 | 3611 | | | |
| | 112 | 189 | 12.6 | III | 15.3 | 1636 | 3863 | 2025 | 3863 | | | |
| | 98 | 216 | 12.2 | III | 17.45 | 1636 | 4021 | 2025 | 4021 | | | |
| | 82 | 258 | 12.2 | III | 20.87 | 1636 | 4235 | 2025 | 4235 | | | |
| | 70 | 303 | 11.7 | III | 24.53 | 1634 | 4435 | 2025 | 4435 | | | |
| | 62 | 342 | 10.4 | III | 27.65 | 1634 | 4500 | 2025 | 4500 | | | |
| | 54 | 389 | 9.1 | III | 31.45 | 1631 | 4500 | 2025 | 4500 | | | |
| | 49 | 430 | 8.2 | III | 34.81 | 1631 | 4500 | 2025 | 4500 | | | |
| | 41 | 515 | 6.9 | III | 41.65 | 1629 | 4500 | 2025 | 4500 | | | |
| | 35 | 605 | 5.9 | III | 48.95 | 1625 | 4500 | 2025 | 4500 | | | |
| | 31 | 682 | 5.2 | III | 55.17 | 1622 | 4500 | 2025 | 4500 | | | |
| | 27 | 775 | 4.6 | III | 62.74 | 1618 | 4500 | 2025 | 4500 | | | |
| | 22 | 946 | 3.7 | III | 76.53 | 1607 | 4500 | 2025 | 4500 | | | |
| | 20 | 1063 | 3.3 | III | 86 | 1600 | 4500 | 2025 | 4500 | | | |
| | 18 | 1203 | 2.9 | III | 97.36 | 1589 | 4500 | 2025 | 4500 | | | |
| | 14 | 1526 | 2.3 | III | 123.48 | 1557 | 4500 | 2025 | 4500 | | | |
| | 12 | 1739 | 2.0 | III | 140.7 | 1532 | 4500 | 2025 | 4500 | | | |
| | 10 | 2058 | 1.7 | II | 166.59 | 1490 | 4500 | 2025 | 4500 | | | |
| | 8.3 | 2545 | 1.4 | II | 205.93 | 1404 | 4500 | 2025 | 4500 | | | |
| | 6.9 | 3044 | 1.2 | I | 246.37 | 1292 | 4500 | 2025 | 4500 | | | |
| | 6.1 | 3469 | 1.0 | I | 280.71 | 1170 | 4500 | 1953 | 4500 | | | |
| | 5.1 | 4107 | 0.9 | * | 332.37 | 918 | 4500 | 1811 | 4500 | | | |
| | 8.3 | 2545 | 2.1 | III | 205.93 | 2025 | 4500 | 2025 | 4500 | **SK 9016.1 - 71S/4** | 80 | 492 |
| | 7.3 | 2899 | 1.8 | II | 234.64 | 2025 | 4500 | 2025 | 4500 | | | |
| | 6.2 | 3433 | 1.5 | II | 277.84 | 2014 | 4500 | 2025 | 4500 | | | |

(AGMA Class I = $f_B$ 1.0 - 1.39 II = $f_B$ 1.4 - 1.99 III = $f_B$ ≥ 2.0 * = $f_B$ < 1.0)




Send Quote Requests to info@automatedpt.com
Call +1(800)985-6929 To Order or Order Online At Nordgearmotors.com

# 0.33, 0.5 hp Gearmotors



DRIVESYSTEMS

| Motor Power $P_n$ [hp] | Output Speed $n_2$ [rpm] | Output Torque $T_2$ [lb-in] | Service Factor $f_B$ | AGMA Class | Gear Ratio $i_{tot}$ | Standard Bearings $F_{RN}$ OHL [lb] | Standard Bearings $F_{AN}$ Thrust [lb] | Heavy Duty Bearings (VL) $F_{RVL}$ OHL [lb] | Heavy Duty Bearings (VL) $F_{AVL}$ Thrust [lb] | Model Type | Weight [lb] | Dim. Page |
|---|---|---|---|---|---|---|---|---|---|---|---|---|
| **0.33** | 4.7 | 4539 | 1.2 | I | 367.33 | 1829 | 4500 | 2025 | 4500 | **SK 9017.1 - 71S/4** | 91 | 496 |
| | 3.5 | 6093 | 0.9 | * | 493.12 | 1422 | 4500 | 2025 | 4500 | | | |
| | 3.1 | 6898 | 0.8 | * | 558.25 | 1089 | 4500 | 2025 | 4500 | | | |
| | 7.3 | 2878 | 2.2 | III | 232.92 | 1969 | 2700 | 2700 | 4790 | **SK 9022.1 - 71S/4** | 96 | 500 |
| | 6.2 | 3421 | 2.1 | III | 276.86 | 1901 | 2700 | 2700 | 5002 | | | |
| | 3.6 | 5838 | 1.3 | I | 472.43 | 1379 | 2700 | 2441 | 5596 | **SK 9023.1 - 71S/4** | 107 | 504 |
| | 3 | 6939 | 1.1 | I | 561.55 | 909 | 2700 | 2210 | 5625 | | | |
| | 2.5 | 8381 | 0.9 | * | 678.31 | | 2700 | 1787 | 5625 | | | |
| | 2.3 | 9315 | 0.8 | * | 753.86 | | 2700 | 1388 | 5625 | | | |
| | 6.8 | 3086 | 4.4 | III | 249.72 | 3368 | 3263 | 3375 | 5013 | **SK 9032.1 - 71S/4** | 140 | 508 |
| | 5.8 | 3656 | 3.8 | III | 295.85 | 3341 | 3263 | 3375 | 5234 | | | |
| | 4.3 | 4927 | 2.8 | III | 398.77 | 3265 | 3263 | 3375 | 5625 | **SK 9033.1 - 71S/4** | 157 | 512 |
| | 3.2 | 6661 | 2.1 | III | 539.1 | 3119 | 3263 | 3375 | 6008 | | | |
| | 2.5 | 8545 | 1.6 | II | 691.55 | 2898 | 3263 | 3375 | 6325 | | | |
| | 2 | 10795 | 1.3 | I | 873.65 | 2527 | 3263 | 3375 | 6604 | | | |
| | 1.5 | 14207 | 1.0 | I | 1149.8 | 1559 | 3263 | 3375 | 6750 | | | |
| | 1.3 | 16822 | 0.8 | * | 1361.37 | | 3263 | 3047 | 6750 | | | |
| | 3 | 7019 | 3.5 | III | 568.04 | 6246 | 9000 | 6300 | 9000 | **SK 9043.1 - 71S/4** | 277 | 520 |
| | 2.7 | 7972 | 3.1 | III | 645.18 | 6215 | 9000 | 6300 | 9000 | | | |
| | 1.9 | 10893 | 2.3 | III | 881.6 | 6093 | 9000 | 6300 | 9000 | | | |
| | 1.5 | 13756 | 1.8 | II | 1113.24 | 5933 | 9000 | 6300 | 9000 | | | |
| | 1.1 | 18747 | 1.3 | I | 1517.17 | 5549 | 9000 | 6300 | 9000 | | | |
| **0.5** | 447 | 71 | 6.1 | III | 3.85 | 592 | 819 | | | **SK 92072 - 71L/4** | 25 | 464 |
| | 328 | 95 | 5.5 | III | 5.24 | 653 | 920 | | | | | |
| | 297 | 105 | 6.2 | III | 5.79 | 673 | 961 | | | | | |
| | 267 | 117 | 5.0 | III | 6.44 | 693 | 995 | | | | | |
| | 219 | 143 | 5.5 | III | 7.87 | 736 | 1078 | | | | | |
| | 191 | 163 | 4.9 | III | 8.99 | 734 | 1136 | | | | | |
| | 178 | 176 | 4.5 | III | 9.68 | 734 | 1148 | | | | | |
| | 156 | 201 | 4.0 | III | 11.06 | 731 | 1148 | | | | | |
| | 127 | 246 | 2.7 | III | 13.55 | 729 | 1148 | | | | | |
| | 98 | 319 | 1.7 | II | 17.56 | 722 | 1148 | | | | | |
| | 84 | 370 | 2.2 | III | 20.37 | 716 | 1148 | | | | | |
| | 74 | 423 | 1.9 | II | 23.28 | 709 | 1148 | | | | | |
| | 65 | 480 | 1.7 | II | 26.39 | 702 | 1148 | | | | | |
| | 57 | 548 | 1.1 | I | 30.15 | 689 | 1148 | | | | | |
| | 50 | 631 | 1.1 | I | 34.73 | 673 | 1148 | | | | | |
| | 43 | 721 | 1.0 | I | 39.67 | 650 | 1148 | | | | | |

(AGMA Class I = $f_B$ 1.0 - 1.39 II = $f_B$ 1.4 - 1.99 III = $f_B$ ≥ 2.0 * = $f_B$ < 1.0)


Send Quote Requests to info@automatedpt.com
Call +1(800)985-6929 To Order or Order Online At Nordgearmotors.com

DRIVESYSTEMS

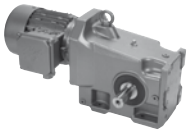



# 0.5 hp Gearmotors

| Motor Power $P_n$ [hp] | Output Speed $n_2$ [rpm] | Output Torque $T_2$ [lb-in] | Service Factor $f_B$ | AGMA Class | Gear Ratio $i_{tot}$ | Standard Bearings $F_{R\,N}$ OHL [lb] | Standard Bearings $F_{A\,N}$ Thrust [lb] | Heavy Duty Bearings (VL) $F_{R\,VL}$ OHL [lb] | Heavy Duty Bearings (VL) $F_{A\,VL}$ Thrust [lb] | Model Type | Weight [lb] | Dim. Page |
|---|---|---|---|---|---|---|---|---|---|---|---|---|
| **0.5** | 420 | 75 | 7.0 | III | 4.1 | 713 | 970 | | | **SK 92172 - 71L/4** | 36 | 468 |
| | 361 | 87 | 6.6 | III | 4.77 | 752 | 1031 | | | | | |
| | 323 | 97 | 6.5 | III | 5.33 | 765 | 1076 | | | | | |
| | 285 | 110 | 6.2 | III | 6.04 | 765 | 1132 | | | | | |
| | 244 | 128 | 6.6 | III | 7.04 | 765 | 1202 | | | | | |
| | 215 | 146 | 6.1 | III | 8.01 | 763 | 1260 | | | | | |
| | 190 | 165 | 5.6 | III | 9.07 | 763 | 1260 | | | | | |
| | 166 | 189 | 5.2 | III | 10.37 | 761 | 1260 | | | | | |
| | 146 | 215 | 4.7 | III | 11.81 | 761 | 1260 | | | | | |
| | 128 | 245 | 4.3 | III | 13.49 | 758 | 1260 | | | | | |
| | 110 | 284 | 3.7 | III | 15.61 | 754 | 1260 | | | | | |
| | 92 | 342 | 2.2 | III | 18.79 | 749 | 1260 | | | | | |
| | 61 | 513 | 2.1 | III | 28.24 | 725 | 1260 | | | | | |
| | 53 | 587 | 1.8 | II | 32.27 | 711 | 1260 | | | | | |
| | 48 | 657 | 1.3 | I | 36.11 | 698 | 1260 | | | | | |
| | 42 | 750 | 1.4 | II | 41.26 | 675 | 1260 | | | | | |
| | 37 | 853 | 0.8 | * | 46.9 | 646 | 1260 | | | | | |
| | 32 | 974 | 0.8 | * | 53.59 | 605 | 1260 | | | | | |
| | 51 | 615 | 2.7 | III | 33.8 | 1042 | 2025 | | | **SK 92372 - 71L/4** | 49 | 472 |
| | 45 | 702 | 2.4 | III | 38.62 | 1033 | 2025 | | | | | |
| | 40 | 791 | 1.7 | II | 43.52 | 1024 | 2025 | | | | | |
| | 35 | 904 | 1.7 | II | 49.73 | 1010 | 2025 | | | | | |
| | 31 | 1000 | 1.0 | I | 55 | 997 | 2025 | | | | | |
| | 27 | 1143 | 1.0 | I | 62.85 | 974 | 2025 | | | | | |
| | 33 | 943 | 3.2 | III | 51.86 | 1364 | 2700 | | | **SK 92672 - 71L/4** | 86 | 476 |
| | 29 | 1077 | 3.1 | III | 59.25 | 1352 | 2700 | | | | | |
| | 213 | 147 | 8.6 | III | 8.09 | 1636 | 3188 | 2025 | 3188 | **SK 9012.1 - 71L/4** | 80 | 484 |
| | 186 | 168 | 8.3 | III | 9.23 | 1636 | 3308 | 2025 | 3308 | | | |
| | 159 | 197 | 8.0 | III | 10.85 | 1636 | 3465 | 2025 | 3465 | | | |
| | 141 | 222 | 7.7 | III | 12.23 | 1636 | 3589 | 2025 | 3589 | | | |
| | 112 | 278 | 8.6 | III | 15.3 | 1634 | 3832 | 2025 | 3832 | | | |
| | 99 | 317 | 8.3 | III | 17.45 | 1634 | 3983 | 2025 | 3983 | | | |
| | 82 | 379 | 8.3 | III | 20.87 | 1631 | 4194 | 2025 | 4194 | | | |
| | 70 | 446 | 7.9 | III | 24.53 | 1631 | 4385 | 2025 | 4385 | | | |
| | 62 | 503 | 7.0 | III | 27.65 | 1629 | 4500 | 2025 | 4500 | | | |
| | 55 | 572 | 6.2 | III | 31.45 | 1627 | 4500 | 2025 | 4500 | | | |
| | 49 | 633 | 5.6 | III | 34.81 | 1625 | 4500 | 2025 | 4500 | | | |
| | 41 | 757 | 4.7 | III | 41.65 | 1618 | 4500 | 2025 | 4500 | | | |
| | 35 | 890 | 4.0 | III | 48.95 | 1611 | 4500 | 2025 | 4500 | | | |
| | 31 | 1003 | 3.5 | III | 55.17 | 1602 | 4500 | 2025 | 4500 | | | |
| | 27 | 1141 | 3.1 | III | 62.74 | 1593 | 4500 | 2025 | 4500 | | | |
| | 22 | 1391 | 2.5 | III | 76.53 | 1571 | 4500 | 2025 | 4500 | | | |
| | 20 | 1564 | 2.3 | III | 86 | 1553 | 4500 | 2025 | 4500 | | | |
| | 18 | 1770 | 2.0 | III | 97.36 | 1530 | 4500 | 2025 | 4500 | | | |

(AGMA Class I = $f_B$ 1.0 - 1.39 II = $f_B$ 1.4 - 1.99 III = $f_B$ ≥ 2.0 * = $f_B$ < 1.0)


Send Quote Requests to info@automatedpt.com
Call +1(800)985-6929 To Order or Order Online At Nordgearmotors.com

# 0.5 hp Gearmotors



DRIVESYSTEMS

| Motor Power $P_n$ [hp] | Output Speed $n_2$ [rpm] | Output Torque $T_2$ [lb-in] | Service Factor $f_B$ | AGMA Class | Gear Ratio $i_{tot}$ | Standard Bearings $F_{RN}$ OHL [lb] | Standard Bearings $F_{AN}$ Thrust [lb] | Heavy Duty Bearings (VL) $F_{RVL}$ OHL [lb] | Heavy Duty Bearings (VL) $F_{AVL}$ Thrust [lb] | Model Type | Weight [lb] | Dim. Page |
|---|---|---|---|---|---|---|---|---|---|---|---|---|
| 0.5 | 16 | 1996 | 1.8 | II | 109.79 | 1499 | 4500 | 2025 | 4500 | SK 9012.1 - 71L/4 | 80 | 484 |
| | 14 | 2245 | 1.6 | II | 123.48 | 1460 | 4500 | 2025 | 4500 | | | |
| | 12 | 2558 | 1.4 | II | 140.7 | 1402 | 4500 | 2025 | 4500 | | | |
| | 9.4 | 3329 | 1.1 | I | 183.1 | 1213 | 4500 | 1978 | 4500 | | | |
| | 8.4 | 3744 | 0.9 | * | 205.93 | 1073 | 4500 | 1897 | 4500 | | | |
| | 7 | 4479 | 0.8 | * | 246.37 | 702 | 4500 | 1715 | 4500 | | | |
| | 19 | 1668 | 2.7 | III | 91.77 | 2025 | 4500 | 2025 | 4500 | SK 9016.1 - 71L/4 | 82 | 492 |
| | 11 | 2724 | 2.0 | III | 149.81 | 2025 | 4500 | 2025 | 4500 | | | |
| | 9.4 | 3329 | 1.6 | II | 183.1 | 2025 | 4500 | 2025 | 4500 | | | |
| | 8.4 | 3744 | 1.4 | II | 205.93 | 1969 | 4500 | 2025 | 4500 | | | |
| | 7.3 | 4266 | 1.2 | I | 234.64 | 1881 | 4500 | 2025 | 4500 | | | |
| | 6.4 | 4872 | 1.1 | I | 267.99 | 1760 | 4500 | 2025 | 4500 | SK 9017.1 - 71L/4 | 93 | 496 |
| | 4.7 | 6678 | 0.8 | * | 367.33 | 1193 | 4500 | 2025 | 4500 | | | |
| | 17 | 1798 | 4.2 | III | 98.88 | 2066 | 2700 | 2700 | 3767 | SK 9022.1 - 71L/4 | 98 | 500 |
| | 9.3 | 3354 | 2.3 | III | 184.46 | 1910 | 2700 | 2700 | 4358 | | | |
| | 7.8 | 3986 | 1.9 | II | 219.25 | 1816 | 2700 | 2700 | 4543 | | | |
| | 7.4 | 4235 | 1.5 | II | 232.92 | 1771 | 2700 | 2682 | 4588 | | | |
| | 6.2 | 5034 | 1.4 | II | 276.86 | 1604 | 2700 | 2574 | 4775 | | | |
| | 5.8 | 5412 | 1.4 | II | 297.67 | 1505 | 2700 | 2516 | 4838 | SK 9023.1 - 71L/4 | 109 | 504 |
| | 5.1 | 6171 | 1.2 | I | 339.41 | 1262 | 2700 | 2378 | 4955 | | | |
| | 3.6 | 8589 | 0.9 | * | 472.43 | | 2700 | 1710 | 5191 | | | |
| | 6.9 | 4540 | 3.0 | III | 249.72 | 3290 | 3263 | 3375 | 4838 | SK 9032.1 - 71L/4 | 142 | 508 |
| | 5.8 | 5379 | 2.6 | III | 295.85 | 3231 | 3263 | 3375 | 5029 | | | |
| | 6.4 | 4866 | 2.8 | III | 267.65 | 3269 | 3263 | 3375 | 4925 | SK 9033.1 - 71L/4 | 159 | 512 |
| | 4.9 | 6404 | 2.1 | III | 352.25 | 3143 | 3263 | 3375 | 5218 | | | |
| | 4.3 | 7250 | 1.9 | II | 398.77 | 3058 | 3263 | 3375 | 5353 | | | |
| | 3.2 | 9801 | 1.4 | II | 539.1 | 2707 | 3263 | 3375 | 5654 | | | |
| | 2.5 | 12573 | 1.1 | I | 691.55 | 2113 | 3263 | 3375 | 5857 | | | |
| | 2 | 15884 | 0.9 | * | 873.65 | 311 | 3263 | 3272 | 6019 | | | |
| | 4.9 | 6376 | 3.9 | III | 350.72 | 6264 | 9000 | 6300 | 8129 | SK 9043.1 - 71L/4 | 278 | 520 |
| | 3 | 10328 | 2.4 | III | 568.04 | 6120 | 9000 | 6300 | 9000 | | | |
| | 2.7 | 11730 | 2.1 | III | 645.18 | 6050 | 9000 | 6300 | 9000 | | | |
| | 2 | 16028 | 1.5 | II | 881.6 | 5776 | 9000 | 6300 | 9000 | | | |
| | 1.5 | 20240 | 1.2 | I | 1113.24 | 5402 | 9000 | 6300 | 9000 | | | |
| | 1.1 | 27584 | 0.9 | * | 1517.17 | 4428 | 9000 | 6300 | 9000 | | | |
| | 2.4 | 12796 | 2.8 | III | 703.83 | 8516 | 10125 | 8550 | 10125 | SK 9053.1 - 71L/4 | 450 | 528 |
| | 1.8 | 16942 | 2.5 | III | 931.87 | 8363 | 10125 | 8550 | 10125 | | | |
| | 1.6 | 19324 | 2.2 | III | 1062.85 | 8253 | 10125 | 8550 | 10125 | | | |
| | 1.2 | 25432 | 1.7 | II | 1398.8 | 7900 | 10125 | 8550 | 10125 | | | |
| | 0.92 | 34044 | 1.2 | I | 1872.5 | 7189 | 10125 | 8550 | 10125 | | | |
| | 1.5 | 18972 | 4.0 | III | 1169.97 | 14632 | 11250 | 14850 | 11250 | SK 9072.1/32 - 71L/4 | 794 | 532 |
| | 1.2 | 23568 | 3.2 | III | 1453.44 | 14533 | 11250 | 14850 | 11250 | | | |

(AGMA Class I = $f_B$ 1.0 - 1.39 II = $f_B$ 1.4 - 1.99 III = $f_B$ ≥ 2.0 * = $f_B$ < 1.0)


Send Quote Requests to info@automatedpt.com
Call +1(800)985-6929 To Order or Order Online At Nordgearmotors.com

DRIVESYSTEMS

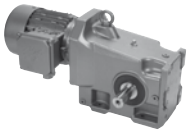



# 0.75 hp Gearmotors

| Motor Power $P_n$ [hp] | Output Speed $n_2$ [rpm] | Output Torque $T_2$ [lb-in] | Service Factor $f_B$ | AGMA Class | Gear Ratio $i_{tot}$ | Standard Bearings $F_{R\,N}$ OHL [lb] | Standard Bearings $F_{A\,N}$ Thrust [lb] | Heavy Duty Bearings (VL) $F_{R\,VL}$ OHL [lb] | Heavy Duty Bearings (VL) $F_{A\,VL}$ Thrust [lb] | Model Type | Weight [lb] | Dim. Page |
|---|---|---|---|---|---|---|---|---|---|---|---|---|
| 0.75 | 444 | 106 | 4.1 | III | 3.85 | 583 | 790 | | | SK 92072 - 80S/4 | 29 | 464 |
| | 326 | 145 | 3.6 | III | 5.24 | 639 | 882 | | | | | |
| | 295 | 160 | 4.1 | III | 5.79 | 659 | 918 | | | | | |
| | 266 | 178 | 3.3 | III | 6.44 | 680 | 945 | | | | | |
| | 217 | 218 | 3.6 | III | 7.87 | 718 | 1019 | | | | | |
| | 190 | 249 | 3.2 | III | 8.99 | 729 | 1069 | | | | | |
| | 177 | 268 | 3.0 | III | 9.68 | 727 | 1091 | | | | | |
| | 155 | 306 | 2.6 | III | 11.06 | 725 | 1139 | | | | | |
| | 126 | 375 | 1.8 | II | 13.55 | 716 | 1148 | | | | | |
| | 97 | 486 | 1.1 | I | 17.56 | 700 | 1148 | | | | | |
| | 84 | 564 | 1.4 | II | 20.37 | 686 | 1148 | | | | | |
| | 73 | 644 | 1.2 | I | 23.28 | 668 | 1148 | | | | | |
| | 65 | 730 | 1.1 | I | 26.39 | 648 | 1148 | | | | | |
| | 417 | 113 | 4.6 | III | 4.1 | 707 | 947 | | | SK 92172 - 80S/4 | 40 | 468 |
| | 358 | 132 | 4.3 | III | 4.77 | 740 | 1008 | | | | | |
| | 321 | 148 | 4.3 | III | 5.33 | 763 | 1049 | | | | | |
| | 283 | 167 | 4.1 | III | 6.04 | 763 | 1105 | | | | | |
| | 243 | 195 | 4.3 | III | 7.04 | 761 | 1166 | | | | | |
| | 213 | 222 | 4.0 | III | 8.01 | 758 | 1222 | | | | | |
| | 189 | 251 | 3.7 | III | 9.07 | 756 | 1260 | | | | | |
| | 165 | 287 | 3.4 | III | 10.37 | 754 | 1260 | | | | | |
| | 145 | 327 | 3.1 | III | 11.81 | 749 | 1260 | | | | | |
| | 127 | 373 | 2.8 | III | 13.49 | 745 | 1260 | | | | | |
| | 110 | 432 | 2.5 | III | 15.61 | 738 | 1260 | | | | | |
| | 91 | 520 | 1.4 | II | 18.79 | 725 | 1260 | | | | | |
| | 75 | 631 | 1.7 | II | 22.78 | 702 | 1260 | | | | | |
| | 66 | 720 | 1.5 | II | 26.03 | 682 | 1260 | | | | | |
| | 61 | 782 | 1.4 | II | 28.24 | 666 | 1260 | | | | | |
| | 53 | 893 | 1.2 | I | 32.27 | 632 | 1260 | | | | | |
| | 47 | 999 | 0.9 | * | 36.11 | 594 | 1260 | | | | | |
| | 41 | 1142 | 0.9 | * | 41.26 | 531 | 1260 | | | | | |
| | 70 | 673 | 2.8 | III | 24.33 | 1035 | 2025 | | | SK 92372 - 80S/4 | 53 | 472 |
| | 62 | 759 | 2.7 | III | 27.41 | 1026 | 2025 | | | | | |
| | 55 | 867 | 1.9 | II | 31.32 | 1015 | 2025 | | | | | |
| | 51 | 936 | 1.8 | II | 33.8 | 1006 | 2025 | | | | | |
| | 44 | 1069 | 1.6 | II | 38.62 | 988 | 2025 | | | | | |
| | 39 | 1205 | 1.1 | I | 43.52 | 963 | 2025 | | | | | |
| | 34 | 1376 | 1.1 | I | 49.73 | 932 | 2025 | | | | | |
| | 46 | 1033 | 2.8 | III | 37.32 | 1357 | 2700 | | | SK 92672 - 80S/4 | 89 | 476 |
| | 41 | 1164 | 2.6 | III | 42.04 | 1346 | 2700 | | | | | |
| | 36 | 1329 | 2.5 | III | 48.03 | 1330 | 2700 | | | | | |
| | 33 | 1435 | 2.1 | III | 51.86 | 1319 | 2700 | | | | | |
| | 29 | 1640 | 2.0 | III | 59.25 | 1296 | 2700 | | | | | |

(AGMA Class I = $f_B$ 1.0 - 1.39 II = $f_B$ 1.4 - 1.99 III = $f_B$ ≥ 2.0 * = $f_B$ < 1.0)


Send Quote Requests to info@automatedpt.com
Call +1(800)985-6929 To Order or Order Online At Nordgearmotors.com

# 0.75 hp Gearmotors



DRIVESYSTEMS

| Motor Power $P_n$ [hp] | Output Speed $n_2$ [rpm] | Output Torque $T_2$ [lb-in] | Service Factor $f_B$ | AGMA Class | Gear Ratio $i_{tot}$ | Standard Bearings $F_{RN}$ OHL [lb] | Standard Bearings $F_{AN}$ Thrust [lb] | Heavy Duty Bearings (VL) $F_{RVL}$ OHL [lb] | Heavy Duty Bearings (VL) $F_{AVL}$ Thrust [lb] | Model Type | Weight [lb] | Dim. Page |
|---|---|---|---|---|---|---|---|---|---|---|---|---|
| 0.75 | 211 | 224 | 5.6 | III | 8.09 | 1636 | 3168 | 2025 | 3168 | SK 9012.1 - 80S/4 | 84 | 484 |
| | 185 | 255 | 5.5 | III | 9.23 | 1636 | 3285 | 2025 | 3285 | | | |
| | 158 | 300 | 5.3 | III | 10.85 | 1634 | 3443 | 2025 | 3443 | | | |
| | 140 | 339 | 5.1 | III | 12.23 | 1634 | 3560 | 2025 | 3560 | | | |
| | 112 | 423 | 5.6 | III | 15.3 | 1631 | 3803 | 2025 | 3803 | | | |
| | 98 | 483 | 5.5 | III | 17.45 | 1629 | 3944 | 2025 | 3944 | | | |
| | 82 | 578 | 5.5 | III | 20.87 | 1627 | 4147 | 2025 | 4147 | | | |
| | 70 | 679 | 5.2 | III | 24.53 | 1622 | 4336 | 2025 | 4336 | | | |
| | 62 | 765 | 4.6 | III | 27.65 | 1618 | 4478 | 2025 | 4478 | | | |
| | 54 | 870 | 4.1 | III | 31.45 | 1611 | 4500 | 2025 | 4500 | | | |
| | 49 | 963 | 3.7 | III | 34.81 | 1607 | 4500 | 2025 | 4500 | | | |
| | 41 | 1153 | 3.1 | III | 41.65 | 1593 | 4500 | 2025 | 4500 | | | |
| | 35 | 1355 | 2.6 | III | 48.95 | 1575 | 4500 | 2025 | 4500 | | | |
| | 31 | 1527 | 2.3 | III | 55.17 | 1557 | 4500 | 2025 | 4500 | | | |
| | 27 | 1737 | 2.0 | III | 62.74 | 1532 | 4500 | 2025 | 4500 | | | |
| | 22 | 2118 | 1.7 | II | 76.53 | 1481 | 4500 | 2025 | 4500 | | | |
| | 20 | 2380 | 1.5 | II | 86 | 1436 | 4500 | 2025 | 4500 | | | |
| | 18 | 2695 | 1.3 | I | 97.36 | 1375 | 4500 | 2025 | 4500 | | | |
| | 16 | 3039 | 1.2 | I | 109.79 | 1294 | 4500 | 2025 | 4500 | | | |
| | 24 | 1990 | 2.7 | III | 71.88 | 2025 | 4500 | 2025 | 4500 | SK 9016.1 - 80S/4 | 86 | 492 |
| | 21 | 2252 | 2.4 | III | 81.38 | 2025 | 4500 | 2025 | 4500 | | | |
| | 19 | 2540 | 1.7 | II | 91.77 | 2025 | 4500 | 2025 | 4500 | | | |
| | 15 | 3225 | 1.7 | II | 116.52 | 2025 | 4500 | 2025 | 4500 | | | |
| | 12 | 3942 | 1.4 | II | 142.41 | 1937 | 4500 | 2025 | 4500 | | | |
| | 11 | 4146 | 1.3 | I | 149.81 | 1901 | 4500 | 2025 | 4500 | | | |
| | 9.3 | 5068 | 1.1 | I | 183.1 | 1715 | 4500 | 2025 | 4500 | | | |
| | 31 | 1551 | 2.3 | III | 56.02 | 1816 | 2700 | | | SK 92772 - 80S/4 | 105 | 480 |
| | 27 | 1772 | 2.3 | III | 64.01 | 1802 | 2700 | | | | | |
| | 29 | 1612 | 4.7 | III | 58.25 | 2077 | 2700 | 2700 | 3213 | SK 9022.1 - 80S/4 | 101 | 500 |
| | 26 | 1838 | 4.1 | III | 66.42 | 2061 | 2700 | 2700 | 3312 | | | |
| | 22 | 2184 | 3.5 | III | 78.89 | 2036 | 2700 | 2700 | 3454 | | | |
| | 20 | 2356 | 3.2 | III | 85.11 | 2021 | 2700 | 2700 | 3521 | | | |
| | 17 | 2737 | 2.8 | III | 98.88 | 1985 | 2700 | 2700 | 3641 | | | |
| | 15 | 3203 | 2.4 | III | 115.74 | 1931 | 2700 | 2700 | 3753 | | | |
| | 12 | 3808 | 2.0 | III | 137.57 | 1845 | 2700 | 2700 | 3908 | | | |
| | 10 | 4700 | 1.6 | II | 169.81 | 1679 | 2700 | 2624 | 4075 | | | |
| | 9.3 | 5106 | 1.5 | II | 184.46 | 1586 | 2700 | 2565 | 4120 | | | |
| | 7.8 | 6068 | 1.3 | I | 219.25 | 1301 | 2700 | 2399 | 4262 | | | |
| | 15 | 3066 | 4.5 | III | 110.77 | 3368 | 3263 | 3375 | 3859 | SK 9032.1 - 80S/4 | 146 | 508 |
| | 8.7 | 5465 | 2.5 | III | 197.45 | 3224 | 3263 | 3375 | 4381 | | | |
| | 7.3 | 6474 | 2.1 | III | 233.92 | 3137 | 3263 | 3375 | 4532 | | | |
| | 6.8 | 6912 | 2.0 | III | 249.72 | 3094 | 3263 | 3375 | 4574 | | | |
| | 5.8 | 8189 | 1.7 | II | 295.85 | 2945 | 3263 | 3375 | 4723 | | | |

(AGMA Class I = $f_B$ 1.0 - 1.39 II = $f_B$ 1.4 - 1.99 III = $f_B$ ≥ 2.0 * = $f_B$ < 1.0)


Send Quote Requests to info@automatedpt.com
Call +1(800)985-6929 To Order or Order Online At Nordgearmotors.com

DRIVESYSTEMS

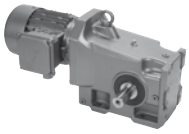



# 0.75 hp, 1.0 hp Gearmotors

| Motor Power $P_n$ [hp] | Output Speed $n_2$ [rpm] | Output Torque $T_2$ [lb-in] | Service Factor $f_B$ | AGMA Class | Gear Ratio $i_{tot}$ | Standard Bearings $F_{RN}$ OHL [lb] | Standard Bearings $F_{AN}$ Thrust [lb] | Heavy Duty Bearings (VL) $F_{RVL}$ OHL [lb] | Heavy Duty Bearings (VL) $F_{AVL}$ Thrust [lb] | Model Type | Weight [lb] | Dim. Page |
|---|---|---|---|---|---|---|---|---|---|---|---|---|
| 0.75 | 4.9 | 9750 | 1.4 | II | 352.25 | 2716 | 3263 | 3375 | 4856 | SK 9033.1 - 80S/4 | 163 | 512 |
| | 4.3 | 11037 | 1.2 | I | 398.77 | 2477 | 3263 | 3375 | 4950 | | | |
| | 4.9 | 9707 | 2.6 | III | 350.72 | 6147 | 9000 | 6300 | 7821 | SK 9043.1 - 80S/4 | 282 | 520 |
| | 3 | 15722 | 1.6 | II | 568.04 | 5798 | 9000 | 6300 | 8627 | | | |
| | 2.7 | 17857 | 1.4 | II | 645.18 | 5627 | 9000 | 6300 | 8750 | | | |
| | 1.9 | 24401 | 1.0 | I | 881.6 | 4912 | 9000 | 6300 | 9000 | | | |
| | 1.5 | 30813 | 0.8 | * | 1113.24 | 3805 | 9000 | 6300 | 9000 | | | |
| | 2.4 | 19481 | 1.8 | II | 703.83 | 8246 | 10125 | 8550 | 10125 | SK 9053.1 - 80S/4 | 454 | 528 |
| | 1.8 | 25793 | 1.6 | II | 931.87 | 7875 | 10125 | 8550 | 10125 | | | |
| | 1.6 | 29418 | 1.4 | II | 1062.85 | 7605 | 10125 | 8550 | 10125 | | | |
| | 1.2 | 38716 | 1.1 | I | 1398.8 | 6676 | 10125 | 8550 | 10125 | | | |
| | 1.5 | 30070 | 2.5 | III | 1169.97 | 14353 | 11250 | 14850 | 11250 | SK 9072.1/32 - 80S/4 | 798 | 532 |
| | 1.2 | 37355 | 2.0 | III | 1453.44 | 14096 | 11250 | 14850 | 11250 | | | |
| 1.0 | 429 | 147 | 2.9 | III | 3.85 | 581 | 772 | | | SK 92072 - 80L/4<br>SK 92072 - 80LH/4 | 31 | 464 |
| | 315 | 201 | 2.6 | III | 5.24 | 632 | 851 | | | | | |
| | 285 | 222 | 2.9 | III | 5.79 | 648 | 884 | | | | | |
| | 256 | 247 | 2.4 | III | 6.44 | 668 | 909 | | | | | |
| | 210 | 302 | 2.6 | III | 7.87 | 704 | 968 | | | | | |
| | 184 | 345 | 2.3 | III | 8.99 | 720 | 1015 | | | | | |
| | 170 | 372 | 2.1 | III | 9.68 | 716 | 1026 | | | | | |
| | 149 | 425 | 1.9 | II | 11.06 | 709 | 1069 | | | | | |
| | 122 | 521 | 1.3 | I | 13.55 | 693 | 1091 | | | | | |
| | 81 | 783 | 1.0 | I | 20.37 | 635 | 1148 | | | | | |
| | 71 | 894 | 0.9 | * | 23.28 | 599 | 1148 | | | | | |
| | 402 | 158 | 3.3 | III | 4.1 | 704 | 938 | | | SK 92172 - 80L/4<br>SK 92172 - 80LH/4 | 42 | 468 |
| | 346 | 183 | 3.1 | III | 4.77 | 738 | 990 | | | | | |
| | 310 | 205 | 3.1 | III | 5.33 | 761 | 1033 | | | | | |
| | 273 | 232 | 2.9 | III | 6.04 | 758 | 1080 | | | | | |
| | 234 | 270 | 3.1 | III | 7.04 | 756 | 1139 | | | | | |
| | 206 | 308 | 2.9 | III | 8.01 | 752 | 1188 | | | | | |
| | 182 | 348 | 2.7 | III | 9.07 | 747 | 1240 | | | | | |
| | 159 | 398 | 2.4 | III | 10.37 | 743 | 1260 | | | | | |
| | 140 | 454 | 2.2 | III | 11.81 | 734 | 1260 | | | | | |
| | 122 | 518 | 2.0 | III | 13.49 | 725 | 1260 | | | | | |
| | 106 | 600 | 1.8 | II | 15.61 | 709 | 1260 | | | | | |
| | 88 | 722 | 1.0 | I | 18.79 | 682 | 1260 | | | | | |
| | 72 | 875 | 1.2 | I | 22.78 | 639 | 1260 | | | | | |
| | 63 | 1000 | 1.1 | I | 26.03 | 594 | 1260 | | | | | |
| | 58 | 1085 | 1.0 | I | 28.24 | 558 | 1260 | | | | | |
| | 51 | 1240 | 0.9 | * | 32.27 | 477 | 1260 | | | | | |

(AGMA Class I = $f_B$ 1.0 - 1.39 II = $f_B$ 1.4 - 1.99 III = $f_B$ ≥ 2.0 * = $f_B$ < 1.0) **(Model Type in blue is an Energy Efficient motor)**


Send Quote Requests to info@automatedpt.com
Call +1(800)985-6929 To Order or Order Online At Nordgearmotors.com

# 1.0 hp Gearmotors



DRIVESYSTEMS

| Motor Power $P_n$ [hp] | Output Speed $n_2$ [rpm] | Output Torque $T_2$ [lb-in] | Service Factor $f_B$ | AGMA Class | Gear Ratio $i_{tot}$ | Standard Bearings $F_{RN}$ OHL [lb] | Standard Bearings $F_{AN}$ Thrust [lb] | Heavy Duty Bearings (VL) $F_{RVL}$ OHL [lb] | Heavy Duty Bearings (VL) $F_{AVL}$ Thrust [lb] | Model Type | Weight [lb] | Dim. Page |
|---|---|---|---|---|---|---|---|---|---|---|---|---|
| 1.0 | 113 | 563 | 3.0 | III | 14.65 | 1044 | 2025 | | | SK 92372 - 80L/4<br>SK 92372 - 80LH/4 | 55 | 472 |
| | 68 | 935 | 2.0 | III | 24.33 | 1006 | 2025 | | | | | |
| | 60 | 1053 | 1.9 | II | 27.41 | 990 | 2025 | | | | | |
| | 53 | 1203 | 1.4 | II | 31.32 | 965 | 2025 | | | | | |
| | 49 | 1298 | 1.3 | I | 33.8 | 947 | 2025 | | | | | |
| | 43 | 1484 | 1.1 | I | 38.62 | 907 | 2025 | | | | | |
| | 39 | 1615 | 1.9 | II | 42.04 | 1298 | 2700 | | | SK 92672 - 80L/4<br>SK 92672 - 80LH/4 | 92 | 476 |
| | 34 | 1845 | 1.8 | II | 48.03 | 1267 | 2700 | | | | | |
| | 32 | 1992 | 1.5 | II | 51.86 | 1244 | 2700 | | | | | |
| | 28 | 2276 | 1.5 | II | 59.25 | 1195 | 2700 | | | | | |
| | 204 | 311 | 4.1 | III | 8.09 | 1634 | 3173 | 2025 | 3173 | SK 9012.1 - 80L/4<br>SK 9012.1 - 80LH/4 | 86 | 484 |
| | 179 | 355 | 3.9 | III | 9.23 | 1634 | 3292 | 2025 | 3292 | | | |
| | 152 | 417 | 3.8 | III | 10.85 | 1631 | 3443 | 2025 | 3443 | | | |
| | 135 | 470 | 3.7 | III | 12.23 | 1629 | 3560 | 2025 | 3560 | | | |
| | 108 | 588 | 4.1 | III | 15.3 | 1625 | 3803 | 2025 | 3803 | | | |
| | 95 | 670 | 3.9 | III | 17.45 | 1622 | 3944 | 2025 | 3944 | | | |
| | 79 | 802 | 3.9 | III | 20.87 | 1616 | 4147 | 2025 | 4147 | | | |
| | 67 | 942 | 3.8 | III | 24.53 | 1607 | 4322 | 2025 | 4322 | | | |
| | 60 | 1062 | 3.3 | III | 27.65 | 1600 | 4457 | 2025 | 4457 | | | |
| | 52 | 1208 | 2.9 | III | 31.45 | 1589 | 4500 | 2025 | 4500 | | | |
| | 47 | 1337 | 2.6 | III | 34.81 | 1577 | 4500 | 2025 | 4500 | | | |
| | 40 | 1600 | 2.2 | III | 41.65 | 1550 | 4500 | 2025 | 4500 | | | |
| | 34 | 1881 | 1.9 | II | 48.95 | 1514 | 4500 | 2025 | 4500 | | | |
| | 30 | 2119 | 1.7 | II | 55.17 | 1481 | 4500 | 2025 | 4500 | | | |
| | 26 | 2410 | 1.5 | II | 62.74 | 1431 | 4500 | 2025 | 4500 | | | |
| | 22 | 2940 | 1.2 | I | 76.53 | 1319 | 4500 | 2025 | 4500 | | | |
| | 19 | 3304 | 1.1 | I | 86 | 1220 | 4500 | 1982 | 4500 | | | |
| | 17 | 3740 | 0.9 | * | 97.36 | 1076 | 4500 | 1897 | 4500 | | | |
| | 15 | 4218 | 0.8 | * | 109.79 | 862 | 4500 | 1784 | 4500 | | | |
| | 31 | 2015 | 2.7 | III | 52.44 | 2025 | 4500 | 2025 | 4500 | SK 9016.1 - 80L/4<br>SK 9016.1 - 80LH/4 | 88 | 492 |
| | 26 | 2458 | 2.2 | III | 63.97 | 2025 | 4500 | 2025 | 4500 | | | |
| | 23 | 2761 | 1.9 | II | 71.88 | 2025 | 4500 | 2025 | 4500 | | | |
| | 20 | 3126 | 1.7 | II | 81.38 | 2025 | 4500 | 2025 | 4500 | | | |
| | 18 | 3526 | 1.3 | I | 91.77 | 2000 | 4500 | 2025 | 4500 | | | |
| | 14 | 4476 | 1.2 | I | 116.52 | 1841 | 4500 | 2025 | 4500 | | | |
| | 12 | 5471 | 1.0 | I | 142.41 | 1611 | 4500 | 2025 | 4500 | | | |
| | 11 | 5755 | 0.9 | * | 149.81 | 1530 | 4500 | 2025 | 4500 | | | |
| | 9 | 7034 | 0.8 | * | 183.1 | 1017 | 4500 | 2025 | 4500 | | | |
| | 40 | 1566 | 2.5 | III | 40.77 | 1816 | 2700 | | | SK 92772 - 80L/4<br>SK 92772 - 80LH/4 | 107 | 480 |
| | 36 | 1764 | 2.5 | III | 45.93 | 1802 | 2700 | | | | | |
| | 31 | 2016 | 2.5 | III | 52.48 | 1784 | 2700 | | | | | |
| | 29 | 2152 | 1.6 | II | 56.02 | 1773 | 2700 | | | | | |
| | 26 | 2459 | 1.7 | II | 64.01 | 1746 | 2700 | | | | | |

(AGMA Class I = $f_B$ 1.0 - 1.39 II = $f_B$ 1.4 - 1.99 III = $f_B$ ≥ 2.0 * = $f_B$ < 1.0) **(Model Type in blue is an Energy Efficient motor)**


Send Quote Requests to info@automatedpt.com
Call +1(800)985-6929 To Order or Order Online At Nordgearmotors.com

NORD DRIVESYSTEMS

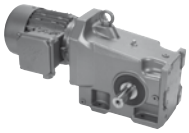



# 1.0 hp Gearmotors

| Motor Power $P_n$ [hp] | Output Speed $n_2$ [rpm] | Output Torque $T_2$ [lb-in] | Service Factor $f_B$ | AGMA Class | Gear Ratio $i_{tot}$ | Standard Bearings $F_{R\,N}$ OHL [lb] | Standard Bearings $F_{A\,N}$ Thrust [lb] | Heavy Duty Bearings (VL) $F_{R\,VL}$ OHL [lb] | Heavy Duty Bearings (VL) $F_{A\,VL}$ Thrust [lb] | Model Type | Weight [lb] | Dim. Page |
|---|---|---|---|---|---|---|---|---|---|---|---|---|
| 1.0 | 67 | 944 | 3.7 | III | 24.56 | 2108 | 2700 | 2700 | 2538 | **SK 9022.1 - 80L/4** | 104 | 500 |
| | 63 | 1002 | 3.8 | III | 26.07 | 2106 | 2700 | 2700 | 2583 | SK 9022.1 - 80LH/4 | | |
| | 57 | 1122 | 3.7 | III | 29.2 | 2102 | 2700 | 2700 | 2664 | | | |
| | 50 | 1278 | 3.3 | III | 33.26 | 2095 | 2700 | 2700 | 2745 | | | |
| | 41 | 1528 | 4.1 | III | 39.77 | 2081 | 2700 | 2700 | 2882 | | | |
| | 37 | 1718 | 3.9 | III | 44.71 | 2070 | 2700 | 2700 | 2966 | | | |
| | 34 | 1883 | 3.7 | III | 49.01 | 2059 | 2700 | 2700 | 3024 | | | |
| | 32 | 1998 | 3.8 | III | 52.02 | 2050 | 2700 | 2700 | 3071 | | | |
| | 28 | 2238 | 3.4 | III | 58.25 | 2032 | 2700 | 2700 | 3157 | | | |
| | 25 | 2552 | 3.0 | III | 66.42 | 2003 | 2700 | 2700 | 3249 | | | |
| | 21 | 3031 | 2.5 | III | 78.89 | 1951 | 2700 | 2700 | 3382 | | | |
| | 19 | 3270 | 2.3 | III | 85.11 | 1922 | 2700 | 2700 | 3431 | | | |
| | 17 | 3799 | 2.0 | III | 98.88 | 1845 | 2700 | 2700 | 3537 | | | |
| | 14 | 4446 | 1.7 | II | 115.74 | 1730 | 2700 | 2657 | 3629 | | | |
| | 12 | 5285 | 1.4 | II | 137.57 | 1541 | 2700 | 2536 | 3753 | | | |
| | 9.7 | 6524 | 1.2 | I | 169.81 | 1118 | 2700 | 2304 | 3870 | | | |
| | 8.9 | 7086 | 1.1 | I | 184.46 | 817 | 2700 | 2174 | 3884 | | | |
| | 7.5 | 8423 | 0.9 | * | 219.25 | | 2700 | 1771 | 3989 | | | |
| | 20 | 3234 | 3.7 | III | 84.17 | 3281 | 3263 | 3375 | 3551 | **SK 9032.1 - 80L/4** | 148 | 508 |
| | 18 | 3592 | 3.3 | III | 93.5 | 3344 | 3263 | 3375 | 3625 | SK 9032.1 - 80LH/4 | | |
| | 15 | 4255 | 3.2 | III | 110.77 | 3308 | 3263 | 3375 | 3769 | | | |
| | 8.4 | 7585 | 1.8 | II | 197.45 | 3020 | 3263 | 3375 | 4190 | | | |
| | 7.1 | 8987 | 1.5 | II | 233.92 | 2835 | 3263 | 3375 | 4311 | | | |
| | 6.6 | 9594 | 1.4 | II | 249.72 | 2743 | 3263 | 3375 | 4338 | | | |
| | 5.6 | 11366 | 1.2 | I | 295.85 | 2408 | 3263 | 3375 | 4430 | | | |
| | 4.7 | 13532 | 1.0 | I | 352.25 | 1816 | 3263 | 3375 | 4496 | **SK 9033.1 - 80L/4** | 165 | 512 |
| | 4.1 | 15320 | 0.9 | * | 398.77 | 954 | 3263 | 3375 | 4516 | SK 9033.1 - 80LH/4 | | |
| | 9.6 | 6611 | 3.4 | III | 172.08 | 6260 | 9000 | 6300 | 6516 | **SK 9043.1 - 80L/4** | 284 | 520 |
| | 8.1 | 7852 | 3.2 | III | 204.38 | 6219 | 9000 | 6300 | 6770 | SK 9043.1 - 80LH/4 | | |
| | 5.9 | 10741 | 2.3 | III | 279.6 | 6100 | 9000 | 6300 | 7243 | | | |
| | 4.7 | 13474 | 1.8 | II | 350.72 | 5951 | 9000 | 6300 | 7562 | | | |
| | 2.9 | 21822 | 1.1 | I | 568.04 | 5231 | 9000 | 6300 | 8129 | | | |
| | 2.6 | 24786 | 1.0 | I | 645.18 | 4860 | 9000 | 6300 | 8181 | | | |
| | 4.7 | 13404 | 3.2 | III | 348.91 | 8496 | 10125 | 8550 | 10125 | **SK 9053.1 - 80L/4** | 456 | 528 |
| | 3.6 | 17617 | 2.4 | III | 458.57 | 8334 | 10125 | 8550 | 10125 | SK 9053.1 - 80LH/4 | | |
| | 2.8 | 22280 | 1.9 | II | 579.95 | 8096 | 10125 | 8550 | 10125 | | | |
| | 2.3 | 27039 | 1.3 | I | 703.83 | 7787 | 10125 | 8550 | 10125 | | | |
| | 1.8 | 35800 | 1.2 | I | 931.87 | 7009 | 10125 | 8550 | 10125 | | | |
| | 1.6 | 40832 | 1.0 | I | 1062.85 | 6406 | 10125 | 8550 | 10125 | | | |
| | 1.2 | 53738 | 0.8 | * | 1398.8 | 3938 | 10125 | 8550 | 10125 | | | |
| | 2.1 | 27914 | 2.7 | III | 767.55 | 14418 | 11250 | 14850 | 11250 | **SK 9072.1/32 - 80L/4** | 800 | 532 |
| | 1.7 | 35411 | 2.1 | III | 973.69 | 14171 | 11250 | 14850 | 11250 | SK 9072.1/32 - 80LH/4 | | |
| | 1.4 | 42550 | 1.8 | II | 1169.97 | 13878 | 11250 | 14850 | 11250 | | | |
| | 1.1 | 52859 | 1.4 | II | 1453.44 | 13343 | 11250 | 14850 | 11250 | | | |

(AGMA Class I = $f_B$ 1.0 - 1.39 II = $f_B$ 1.4 - 1.99 III = $f_B$ ≥ 2.0 * = $f_B$ < 1.0) **(Model Type in blue is an Energy Efficient motor)**


Send Quote Requests to info@automatedpt.com
Call +1(800)985-6929 To Order or Order Online At Nordgearmotors.com

# 1.5 hp Gearmotors



DRIVESYSTEMS



| Motor Power $P_n$ [hp] | Output Speed $n_2$ [rpm] | Output Torque $T_2$ [lb-in] | Service Factor $f_B$ | AGMA Class | Gear Ratio $i_{tot}$ | Standard Bearings $F_{RN}$ OHL [lb] | Standard Bearings $F_{AN}$ Thrust [lb] | Heavy Duty Bearings (VL) $F_{RVL}$ OHL [lb] | Heavy Duty Bearings (VL) $F_{AVL}$ Thrust [lb] | Model Type | Weight [lb] | Dim. Page |
|---|---|---|---|---|---|---|---|---|---|---|---|---|
| 1.5 | 431 | 219 | 2.8 | III | 3.85 | 558 | 707 | | | **SK 92072 - 90S/4** | 37 | 464 |
| | 287 | 330 | 2.1 | III | 5.79 | 617 | 797 | | | SK 92072 - 90SH/4 | | |
| | 405 | 234 | 2.8 | III | 4.1 | 686 | 891 | | | **SK 92172 - 90S/4** | 49 | 468 |
| | 348 | 272 | 2.6 | III | 4.77 | 716 | 934 | | | SK 92172 - 90SH/4 | | |
| | 311 | 304 | 2.5 | III | 5.33 | 738 | 968 | | | | | |
| | 275 | 344 | 2.3 | III | 6.04 | 747 | 1008 | | | | | |
| | 236 | 401 | 2.1 | III | 7.04 | 743 | 1055 | | | | | |
| | 207 | 457 | 1.9 | II | 8.01 | 734 | 1094 | | | | | |
| | 183 | 517 | 1.8 | II | 9.07 | 725 | 1130 | | | | | |
| | 160 | 591 | 1.6 | II | 10.37 | 711 | 1172 | | | | | |
| | 175 | 540 | 2.9 | III | 9.47 | 1046 | 1904 | | | **SK 92372 - 90S/4** | 62 | 472 |
| | 153 | 618 | 2.6 | III | 10.84 | 1040 | 1989 | | | SK 92372 - 90SH/4 | | |
| | 146 | 650 | 2.7 | III | 11.39 | 1037 | 2025 | | | | | |
| | 128 | 742 | 2.3 | III | 13.01 | 1028 | 2025 | | | | | |
| | 113 | 835 | 2 | III | 14.65 | 1019 | 2025 | | | | | |
| | 97 | 973 | 2.1 | III | 17.06 | 1001 | 2025 | | | | | |
| | 86 | 1095 | 1.9 | II | 19.21 | 983 | 2025 | | | | | |
| | 76 | 1252 | 1.4 | II | 21.95 | 956 | 2025 | | | | | |
| | 68 | 1387 | 1.3 | I | 24.33 | 929 | 2025 | | | | | |
| | 61 | 1563 | 1.3 | I | 27.41 | 887 | 2025 | | | | | |
| | 53 | 1786 | 0.9 | * | 31.32 | 826 | 2025 | | | | | |
| | 63 | 1514 | 1.9 | II | 26.55 | 1310 | 2700 | | | **SK 92672 - 90S/4** | 98 | 476 |
| | 55 | 1706 | 1.8 | II | 29.91 | 1287 | 2700 | | | SK 92672 - 90SH/4 | | |
| | 49 | 1949 | 1.7 | II | 34.17 | 1251 | 2700 | | | | | |
| | 44 | 2128 | 1.4 | II | 37.32 | 1222 | 2700 | | | | | |
| | 39 | 2397 | 1.3 | I | 42.04 | 1172 | 2700 | | | | | |
| | 35 | 2739 | 1.2 | I | 48.03 | 1094 | 2700 | | | | | |
| | 205 | 461 | 3.5 | III | 8.09 | 1629 | 3121 | 2025 | 3121 | **SK 9012.1 - 90S/4** | 93 | 484 |
| | 180 | 526 | 3.3 | III | 9.23 | 1627 | 3233 | 2025 | 3233 | SK 9012.1 - 90SH/4 | | |
| | 153 | 619 | 2.9 | III | 10.85 | 1625 | 3377 | 2025 | 3377 | | | |
| | 136 | 697 | 2.8 | III | 12.23 | 1620 | 3481 | 2025 | 3481 | | | |
| | 108 | 872 | 3.9 | III | 15.3 | 1611 | 3717 | 2025 | 3717 | | | |
| | 95 | 995 | 3.4 | III | 17.45 | 1604 | 3845 | 2025 | 3845 | | | |
| | 80 | 1190 | 3.0 | III | 20.87 | 1589 | 4028 | 2025 | 4028 | | | |
| | 68 | 1399 | 2.5 | III | 24.53 | 1571 | 4194 | 2025 | 4194 | | | |
| | 60 | 1577 | 2.2 | III | 27.65 | 1553 | 4322 | 2025 | 4322 | | | |
| | 53 | 1793 | 2.0 | III | 31.45 | 1526 | 4442 | 2025 | 4442 | | | |
| | 48 | 1985 | 1.8 | II | 34.81 | 1501 | 4500 | 2025 | 4500 | | | |
| | 40 | 2375 | 1.5 | II | 41.65 | 1438 | 4500 | 2025 | 4500 | | | |
| | 34 | 2791 | 1.3 | I | 48.95 | 1352 | 4500 | 2025 | 4500 | | | |
| | 30 | 3146 | 1.1 | I | 55.17 | 1265 | 4500 | 2012 | 4500 | | | |
| | 26 | 3578 | 1.0 | I | 62.74 | 1134 | 4500 | 1931 | 4500 | | | |
| | 22 | 4364 | 0.8 | * | 76.53 | 776 | 4500 | 1746 | 4500 | | | |

(AGMA Class I = $f_B$ 1.0 - 1.39 II = $f_B$ 1.4 - 1.99 III = $f_B$ ≥ 2.0 * = $f_B$ < 1.0) **(Model Type in blue is an Energy Efficient motor)**


Send Quote Requests to info@automatedpt.com
Call +1(800)985-6929 To Order or Order Online At Nordgearmotors.com

DRIVESYSTEMS

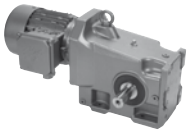



# 1.5 hp Gearmotors

| Motor Power $P_n$ [hp] | Output Speed $n_2$ [rpm] | Output Torque $T_2$ [lb-in] | Service Factor $f_B$ | AGMA Class | Gear Ratio $i_{tot}$ | Standard Bearings $F_{RN}$ OHL [lb] | Standard Bearings $F_{AN}$ Thrust [lb] | Heavy Duty Bearings (VL) $F_{RVL}$ OHL [lb] | Heavy Duty Bearings (VL) $F_{AVL}$ Thrust [lb] | Model Type | Weight [lb] | Dim. Page |
|---|---|---|---|---|---|---|---|---|---|---|---|---|
| 1.5 | 54 | 1740 | 3.1 | III | 30.52 | 2025 | 4408 | 2025 | 4408 | **SK 9016.1 - 90S/4** | 95 | 492 |
| | 48 | 1985 | 2.7 | III | 34.81 | 2025 | 4500 | 2025 | 4500 | SK 9016.1 - 90SH/4 | | |
| | 41 | 2333 | 2.3 | III | 40.92 | 2025 | 4500 | 2025 | 4500 | | | |
| | 36 | 2629 | 2.1 | III | 46.11 | 2025 | 4500 | 2025 | 4500 | | | |
| | 32 | 2990 | 1.8 | II | 52.44 | 2025 | 4500 | 2025 | 4500 | | | |
| | 26 | 3648 | 1.5 | II | 63.97 | 1982 | 4500 | 2025 | 4500 | | | |
| | 23 | 4099 | 1.3 | I | 71.88 | 1910 | 4500 | 2025 | 4500 | | | |
| | 20 | 4641 | 1.1 | I | 81.38 | 1809 | 4500 | 2025 | 4500 | | | |
| | 52 | 1827 | 3.1 | III | 32.04 | 1798 | 2700 | | | **SK 92772 - 90S/4** | 114 | 480 |
| | 45 | 2088 | 2.8 | III | 36.61 | 1780 | 2700 | | | SK 92772 - 90SH/4 | | |
| | 41 | 2325 | 1.7 | II | 40.77 | 1757 | 2700 | | | | | |
| | 36 | 2619 | 1.7 | II | 45.93 | 1730 | 2700 | | | | | |
| | 32 | 2993 | 1.7 | II | 52.48 | 1688 | 2700 | | | | | |
| | 53 | 1789 | 4.1 | III | 31.38 | 2066 | 2700 | 2700 | 2626 | **SK 9022.1 - 90S/4** | 110 | 500 |
| | 50 | 1897 | 3.3 | III | 33.26 | 2059 | 2700 | 2700 | 2655 | SK 9022.1 - 90SH/4 | | |
| | 42 | 2268 | 3.4 | III | 39.77 | 2030 | 2700 | 2700 | 2772 | | | |
| | 37 | 2550 | 3.0 | III | 44.71 | 2003 | 2700 | 2700 | 2844 | | | |
| | 34 | 2795 | 2.7 | III | 49.01 | 1978 | 2700 | 2700 | 2887 | | | |
| | 32 | 2966 | 2.6 | III | 52.02 | 1960 | 2700 | 2700 | 2932 | | | |
| | 28 | 3322 | 2.3 | III | 58.25 | 1915 | 2700 | 2700 | 2999 | | | |
| | 25 | 3788 | 2.0 | III | 66.42 | 1847 | 2700 | 2700 | 3071 | | | |
| | 21 | 4499 | 1.7 | II | 78.89 | 1721 | 2700 | 2651 | 3161 | | | |
| | 17 | 5639 | 1.3 | I | 98.88 | 1440 | 2700 | 2477 | 3269 | | | |
| | 22 | 4329 | 3.2 | III | 75.91 | 3020 | 3263 | 3375 | 3299 | **SK 9032.1 - 90S/4** | 154 | 508 |
| | 20 | 4800 | 2.9 | III | 84.17 | 3089 | 3263 | 3375 | 3368 | SK 9032.1 - 90SH/4 | | |
| | 18 | 5332 | 2.6 | III | 93.5 | 3148 | 3263 | 3375 | 3422 | | | |
| | 15 | 6317 | 2.2 | III | 110.77 | 3152 | 3263 | 3375 | 3539 | | | |
| | 14 | 6712 | 2.0 | III | 117.7 | 3114 | 3263 | 3375 | 3551 | | | |
| | 12 | 7951 | 1.7 | II | 139.44 | 2975 | 3263 | 3375 | 3650 | | | |
| | 10 | 9052 | 1.5 | II | 158.74 | 2826 | 3263 | 3375 | 3690 | | | |
| | 8.8 | 10724 | 1.3 | I | 188.06 | 2540 | 3263 | 3375 | 3769 | | | |
| | 8.4 | 11259 | 1.2 | I | 197.45 | 2430 | 3263 | 3375 | 3762 | | | |
| | 7.1 | 13339 | 1.0 | I | 233.92 | 1881 | 3263 | 3375 | 3812 | | | |
| | 6.6 | 14240 | 1.0 | I | 249.72 | 1546 | 3263 | 3375 | 3791 | | | |
| | 5.6 | 16871 | 0.8 | * | 295.85 | | 3263 | 3033 | 3805 | | | |
| | 17 | 5449 | 4.1 | III | 95.56 | 6289 | 9000 | 6300 | 5461 | **SK 9042.1 - 90S/4** | 258 | 516 |
| | 14 | 6717 | 3.2 | III | 117.79 | 6255 | 9000 | 6300 | 5722 | SK 9042.1 - 90SH/4 | | |
| | 10 | 9423 | 1.4 | II | 165.24 | 6161 | 9000 | 6300 | 6140 | | | |
| | 8.5 | 11126 | 2.2 | III | 195.12 | 6082 | 9000 | 6300 | 6309 | | | |
| | 7.1 | 13401 | 1.8 | II | 235.01 | 5956 | 9000 | 6300 | 6557 | | | |
| | 6.1 | 15609 | 1.6 | II | 273.73 | 5807 | 9000 | 6300 | 6653 | | | |
| | 5 | 18800 | 1.3 | I | 329.69 | 5542 | 9000 | 6300 | 6869 | | | |

(AGMA Class I = $f_B$ 1.0 - 1.39 II = $f_B$ 1.4 - 1.99 III = $f_B$ ≥ 2.0 * = $f_B$ < 1.0) **(Model Type in blue is an Energy Efficient motor)**


Send Quote Requests to info@automatedpt.com
Call +1(800)985-6929 To Order or Order Online At Nordgearmotors.com

# 1.5 hp, 2.0 hp Gearmotors



DRIVESYSTEMS



| Motor Power $P_n$ [hp] | Output Speed $n_2$ [rpm] | Output Torque $T_2$ [lb-in] | Service Factor $f_B$ | AGMA Class | Gear Ratio $i_{tot}$ | Standard Bearings $F_{RN}$ OHL [lb] | Standard Bearings $F_{AN}$ Thrust [lb] | Heavy Duty Bearings (VL) $F_{RVL}$ OHL [lb] | Heavy Duty Bearings (VL) $F_{AVL}$ Thrust [lb] | Model Type | Weight [lb] | Dim. Page |
|---|---|---|---|---|---|---|---|---|---|---|---|---|
| 1.5 | 4.7 | 19999 | 1.2 | I | 350.72 | 5427 | 9000 | 6300 | 6914 | **SK 9043.1 - 90S/4** | 291 | 520 |
| | 4.1 | 23084 | 1.1 | I | 404.82 | 5083 | 9000 | 6300 | 6935 | SK 9043.1 - 90SH/4 | | |
| | 2.9 | 32392 | 0.8 | * | 568.04 | 3429 | 9000 | 6300 | 7117 | | | |
| | 6.7 | 14088 | 3.0 | III | 247.06 | 8474 | 10125 | 8550 | 10125 | **SK 9052.1 - 90S/4** | 423 | 524 |
| | 5.7 | 16515 | 2.6 | III | 289.61 | 8381 | 10125 | 8550 | 10125 | SK 9052.1 - 90SH/4 | | |
| | 4.8 | 19896 | 2.1 | III | 348.91 | 8226 | 10125 | 8550 | 10125 | **SK 9053.1 - 90S/4** | 463 | 528 |
| | 3.6 | 26149 | 1.6 | II | 458.57 | 7850 | 10125 | 8550 | 10125 | SK 9053.1 - 90SH/4 | | |
| | 2.9 | 33071 | 1.3 | I | 579.95 | 7283 | 10125 | 8550 | 10125 | | | |
| | 2.4 | 40135 | 0.9 | * | 703.83 | 6498 | 10125 | 8550 | 10125 | | | |
| | 1.8 | 53139 | 0.8 | * | 931.87 | 4104 | 10125 | 8550 | 10125 | | | |
| | 4.3 | 22004 | 3.4 | III | 385.88 | 14569 | 11250 | 14850 | 11250 | **SK 9072.1/32 - 90S/4** | 807 | 552 |
| | 3.5 | 26985 | 2.8 | III | 473.22 | 14443 | 11250 | 14850 | 11250 | SK 9072.1/32 - 90SH/4 | | |
| | 2.8 | 34116 | 2.2 | III | 598.27 | 14218 | 11250 | 14850 | 11250 | | | |
| | 2.2 | 43769 | 1.7 | II | 767.55 | 13822 | 11250 | 14850 | 11250 | | | |
| | 1.7 | 55524 | 1.4 | II | 973.69 | 13181 | 11250 | 14850 | 11250 | | | |
| | 1.4 | 66716 | 1.1 | I | 1169.97 | 12386 | 11250 | 14850 | 11250 | | | |
| | 1.1 | 82881 | 0.9 | * | 1453.44 | 10845 | 11250 | 14850 | 11250 | | | |
| | 2.4 | 40172 | 2.9 | III | 704.48 | 21375 | 13500 | 21375 | 13500 | **SK 9082.1/42 - 90S/4** | 1418 | 552 |
| | 2 | 48207 | 2.4 | III | 845.38 | 21283 | 13500 | 21375 | 13500 | SK 9082.1/42 - 90SH/4 | | |
| | 1.6 | 58037 | 2.0 | III | 1017.77 | 21053 | 13500 | 21375 | 13500 | | | |
| | 1.1 | 83700 | 1.4 | II | 1467.8 | 20234 | 13500 | 21375 | 13500 | | | |
| | 2.3 | 40724 | 4.3 | III | 714.15 | 27000 | 14625 | 27000 | 14625 | **SK 9086.1/52 - 90S/4** | 2024 | 552 |
| | 1.8 | 51771 | 3.4 | III | 907.88 | 27000 | 14625 | 27000 | 14625 | SK 9086.1/52 - 90SH/4 | | |
| | 1.4 | 68553 | 2.6 | III | 1202.18 | 26843 | 14625 | 27000 | 14625 | | | |
| | 1.1 | 83449 | 2.1 | III | 1463.4 | 26447 | 14625 | 27000 | 14625 | | | |
| | 0.62 | 152770 | 2.9 | III | 2679.06 | 49500 | 22500 | | | **SK 9096.1/63 - 90S/4** | 4161 | 553 |
| | 0.52 | 183053 | 2.4 | III | 3210.12 | 49500 | 22500 | | | SK 9096.1/63 - 90SH/4 | | |
| | 0.45 | 210559 | 2.1 | III | 3692.48 | 49500 | 22500 | | | | | |
| | 0.37 | 253267 | 1.7 | II | 4441.42 | 49500 | 22500 | | | | | |
| | 0.30 | 317945 | 1.4 | II | 5575.65 | 49500 | 22500 | | | | | |
| | 0.25 | 382433 | 1.2 | I | 6706.55 | 49500 | 22500 | | | | | |
| | 0.21 | 447200 | 1.0 | I | 7842.34 | 49500 | 22500 | | | | | |
| | 0.20 | 473673 | 0.9 | * | 8306.57 | 49500 | 22500 | | | | | |
| | 0.17 | 553891 | 0.8 | * | 9713.32 | 49500 | 22500 | | | | | |
| 2.0 | 431 | 292 | 2.1 | III | 3.85 | 538 | 650 | | | **SK 92072 - 90L/4** | 42 | 464 |
| | 287 | 439 | 1.6 | II | 5.79 | 585 | 711 | | | SK 92072 - 90LH/4 | | |

(AGMA Class I = $f_B$ 1.0 - 1.39 II = $f_B$ 1.4 - 1.99 III = $f_B$ ≥ 2.0 * = $f_B$ < 1.0) **(Model Type in blue is an Energy Efficient motor)**



Send Quote Requests to info@automatedpt.com
Call +1(800)985-6929 To Order or Order Online At Nordgearmotors.com

DRIVESYSTEMS

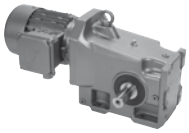



# 2.0 hp Gearmotors

| Motor Power $P_n$ [hp] | Output Speed $n_2$ [rpm] | Output Torque $T_2$ [lb-in] | Service Factor $f_B$ | AGMA Class | Gear Ratio $i_{tot}$ | Standard Bearings $F_{R\,N}$ OHL [lb] | Standard Bearings $F_{A\,N}$ Thrust [lb] | Heavy Duty Bearings (VL) $F_{R\,VL}$ OHL [lb] | Heavy Duty Bearings (VL) $F_{A\,VL}$ Thrust [lb] | Model Type | Weight [lb] | Dim. Page |
|---|---|---|---|---|---|---|---|---|---|---|---|---|
| **2.0** | 405 | 311 | 2.1 | III | 4.1 | 668 | 842 | | | **SK 92172 - 90L/4** | 53 | 468 |
| | 348 | 362 | 2.0 | III | 4.77 | 695 | 882 | | | SK 92172 - 90LH/4 | | |
| | 311 | 404 | 1.9 | II | 5.33 | 713 | 911 | | | | | |
| | 275 | 458 | 1.7 | II | 6.04 | 734 | 938 | | | | | |
| | 236 | 534 | 1.6 | II | 7.04 | 722 | 977 | | | | | |
| | 207 | 608 | 1.5 | II | 8.01 | 709 | 1001 | | | | | |
| | 183 | 688 | 1.4 | II | 9.07 | 691 | 1028 | | | | | |
| | 160 | 787 | 1.2 | I | 10.37 | 666 | 1051 | | | | | |
| | 313 | 402 | 2.7 | III | 5.3 | 1010 | 1483 | | | **SK 92372 - 90L/4** | 66 | 472 |
| | 278 | 453 | 2.7 | III | 5.97 | 1046 | 1555 | | | SK 92372 - 90LH/4 | | |
| | 256 | 492 | 2.6 | III | 6.49 | 1051 | 1589 | | | | | |
| | 227 | 555 | 2.6 | III | 7.32 | 1046 | 1661 | | | | | |
| | 200 | 629 | 2.5 | III | 8.29 | 1040 | 1730 | | | | | |
| | 175 | 718 | 2.2 | III | 9.47 | 1031 | 1811 | | | | | |
| | 153 | 822 | 1.9 | II | 10.84 | 1019 | 1886 | | | | | |
| | 146 | 864 | 2.0 | III | 11.39 | 1015 | 1904 | | | | | |
| | 128 | 987 | 1.7 | II | 13.01 | 999 | 1985 | | | | | |
| | 113 | 1111 | 1.5 | II | 14.65 | 981 | 2025 | | | | | |
| | 97 | 1294 | 1.6 | II | 17.06 | 947 | 2025 | | | | | |
| | 86 | 1457 | 1.4 | II | 19.21 | 914 | 2025 | | | | | |
| | 76 | 1665 | 1.0 | I | 21.95 | 860 | 2025 | | | | | |
| | 68 | 1846 | 1.0 | I | 24.33 | 806 | 2025 | | | | | |
| | 61 | 2079 | 1.0 | I | 27.41 | 720 | 2025 | | | | | |
| | 191 | 661 | 3.0 | III | 8.71 | 1379 | 2300 | | | **SK 92672 - 90L/4** | 103 | 476 |
| | 170 | 742 | 2.9 | III | 9.78 | 1375 | 2394 | | | SK 92672 - 90LH/4 | | |
| | 151 | 836 | 2.9 | III | 11.02 | 1370 | 2516 | | | | | |
| | 131 | 959 | 2.8 | III | 12.64 | 1361 | 2626 | | | | | |
| | 118 | 1068 | 2.7 | III | 14.08 | 1352 | 2700 | | | | | |
| | 103 | 1220 | 2.7 | III | 16.08 | 1341 | 2700 | | | | | |
| | 63 | 2014 | 1.4 | II | 26.55 | 1242 | 2700 | | | | | |
| | 55 | 2269 | 1.3 | I | 29.91 | 1197 | 2700 | | | | | |
| | 49 | 2592 | 1.3 | I | 34.17 | 1130 | 2700 | | | | | |
| | 44 | 2831 | 1.0 | I | 37.32 | 1071 | 2700 | | | | | |
| | 39 | 3189 | 0.9 | * | 42.04 | 965 | 2700 | | | | | |
| | 35 | 3644 | 0.9 | * | 48.03 | 790 | 2700 | | | | | |
| | 205 | 614 | 2.6 | III | 8.09 | 1625 | 3076 | 2025 | 3076 | **SK 9012.1 - 90L/4** | 97 | 484 |
| | 180 | 700 | 2.5 | III | 9.23 | 1620 | 3188 | 2025 | 3188 | SK 9012.1 - 90LH/4 | | |
| | 153 | 823 | 2.2 | III | 10.85 | 1613 | 3319 | 2025 | 3319 | | | |
| | 136 | 928 | 2.1 | III | 12.23 | 1609 | 3420 | 2025 | 3420 | | | |
| | 108 | 1161 | 2.9 | III | 15.3 | 1591 | 3647 | 2025 | 3647 | | | |
| | 95 | 1324 | 2.5 | III | 17.45 | 1577 | 3760 | 2025 | 3760 | | | |

(AGMA Class I = $f_B$ 1.0 - 1.39 II = $f_B$ 1.4 - 1.99 III = $f_B$ ≥ 2.0 * = $f_B$ < 1.0) **(Model Type in blue is an Energy Efficient motor)**



Send Quote Requests to info@automatedpt.com
Call +1(800)985-6929 To Order or Order Online At Nordgearmotors.com

# 2.0 hp Gearmotors



DRIVESYSTEMS



| Motor Power $P_n$ [hp] | Output Speed $n_2$ [rpm] | Output Torque $T_2$ [lb-in] | Service Factor $f_B$ | AGMA Class | Gear Ratio $i_{tot}$ | Standard Bearings $F_{RN}$ OHL [lb] | Standard Bearings $F_{AN}$ Thrust [lb] | Heavy Duty Bearings (VL) $F_{RVL}$ OHL [lb] | Heavy Duty Bearings (VL) $F_{AVL}$ Thrust [lb] | Model Type | Weight [lb] | Dim. Page |
|---|---|---|---|---|---|---|---|---|---|---|---|---|
| 2.0 | 80 | 1583 | 2.2 | III | 20.87 | 1550 | 3933 | 2025 | 3933 | **SK 9012.1 - 90L/4** | 97 | 484 |
| | 68 | 1861 | 1.9 | II | 24.53 | 1517 | 4075 | 2025 | 4075 | SK 9012.1 - 90LH/4 | | |
| | 60 | 2098 | 1.7 | II | 27.65 | 1483 | 4178 | 2025 | 4178 | | | |
| | 53 | 2386 | 1.5 | II | 31.45 | 1436 | 4295 | 2025 | 4295 | | | |
| | 48 | 2641 | 1.3 | I | 34.81 | 1386 | 4365 | 2025 | 4365 | | | |
| | 40 | 3160 | 1.1 | I | 41.65 | 1262 | 4500 | 2009 | 4500 | | | |
| | 34 | 3713 | 1.0 | I | 48.95 | 1085 | 4500 | 1904 | 4500 | | | |
| | 30 | 4185 | 0.8 | * | 55.17 | 878 | 4500 | 1793 | 4500 | | | |
| | 81 | 1556 | 3.0 | III | 20.51 | 2025 | 3902 | 2025 | 3902 | **SK 9016.1 - 90L/4** | 99 | 492 |
| | 72 | 1753 | 2.6 | III | 23.11 | 2025 | 4010 | 2025 | 4010 | SK 9016.1 - 90LH/4 | | |
| | 63 | 1994 | 2.7 | III | 26.29 | 2025 | 4120 | 2025 | 4120 | | | |
| | 54 | 2315 | 2.3 | III | 30.52 | 2025 | 4255 | 2025 | 4255 | | | |
| | 48 | 2641 | 2.0 | III | 34.81 | 2025 | 4365 | 2025 | 4365 | | | |
| | 41 | 3104 | 1.7 | II | 40.92 | 2025 | 4500 | 2025 | 4500 | | | |
| | 36 | 3498 | 1.5 | II | 46.11 | 2005 | 4500 | 2025 | 4500 | | | |
| | 32 | 3978 | 1.4 | II | 52.44 | 1931 | 4500 | 2025 | 4500 | | | |
| | 26 | 4853 | 1.1 | I | 63.97 | 1764 | 4500 | 2025 | 4500 | | | |
| | 23 | 5453 | 1.0 | I | 71.88 | 1618 | 4500 | 2025 | 4500 | | | |
| | 20 | 6174 | 0.9 | * | 81.38 | 1395 | 4500 | 2025 | 4500 | | | |
| | 153 | 825 | 3.0 | III | 10.88 | 1638 | 2567 | | | **SK 92772 - 90L/4** | 118 | 480 |
| | 134 | 943 | 3.0 | III | 12.43 | 1703 | 2700 | | | SK 92772 - 90LH/4 | | |
| | 119 | 1055 | 2.9 | III | 13.91 | 1757 | 2700 | | | | | |
| | 106 | 1183 | 2.7 | III | 15.6 | 1814 | 2700 | | | | | |
| | 93 | 1353 | 2.7 | III | 17.83 | 1827 | 2700 | | | | | |
| | 58 | 2158 | 2.5 | III | 28.44 | 1773 | 2700 | | | | | |
| | 52 | 2431 | 2.3 | III | 32.04 | 1748 | 2700 | | | | | |
| | 45 | 2777 | 2.1 | III | 36.61 | 1712 | 2700 | | | | | |
| | 41 | 3093 | 1.3 | I | 40.77 | 1674 | 2700 | | | | | |
| | 36 | 3484 | 1.3 | I | 45.93 | 1620 | 2700 | | | | | |
| | 32 | 3981 | 1.3 | I | 52.48 | 1537 | 2700 | | | | | |
| | 74 | 1700 | 3.1 | III | 22.41 | 1949 | 2700 | 2700 | 2363 | **SK 9022.1 - 90L/4** | 115 | 500 |
| | 68 | 1863 | 2.8 | III | 24.56 | 1982 | 2700 | 2700 | 2403 | SK 9022.1 - 90LH/4 | | |
| | 64 | 1978 | 3.0 | III | 26.07 | 2018 | 2700 | 2700 | 2444 | | | |
| | 57 | 2215 | 2.8 | III | 29.2 | 2034 | 2700 | 2700 | 2507 | | | |
| | 53 | 2381 | 3.0 | III | 31.38 | 2018 | 2700 | 2700 | 2547 | | | |
| | 50 | 2523 | 2.5 | III | 33.26 | 2005 | 2700 | 2700 | 2563 | | | |
| | 42 | 3017 | 2.5 | III | 39.77 | 1953 | 2700 | 2700 | 2669 | | | |
| | 37 | 3392 | 2.2 | III | 44.71 | 1906 | 2700 | 2700 | 2725 | | | |
| | 34 | 3718 | 2.0 | III | 49.01 | 1859 | 2700 | 2700 | 2759 | | | |
| | 32 | 3946 | 1.9 | II | 52.02 | 1823 | 2700 | 2700 | 2795 | | | |
| | 28 | 4419 | 1.7 | II | 58.25 | 1737 | 2700 | 2660 | 2844 | | | |
| | 25 | 5039 | 1.5 | II | 66.42 | 1602 | 2700 | 2574 | 2905 | | | |
| | 21 | 5985 | 1.3 | I | 78.89 | 1330 | 2700 | 2414 | 2957 | | | |
| | 17 | 7501 | 1.0 | I | 98.88 | 450 | 2700 | 2066 | 3008 | | | |

(AGMA Class I = $f_B$ 1.0 - 1.39 II = $f_B$ 1.4 - 1.99 III = $f_B$ ≥ 2.0 * = $f_B$ < 1.0) **(Model Type in blue is an Energy Efficient motor)**



Send Quote Requests to info@automatedpt.com
Call +1(800)985-6929 To Order or Order Online At Nordgearmotors.com

DRIVESYSTEMS

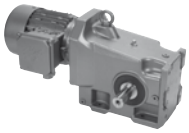



# 2.0 hp Gearmotors

| Motor Power $P_n$ [hp] | Output Speed $n_2$ [rpm] | Output Torque $T_2$ [lb-in] | Service Factor $f_B$ | AGMA Class | Gear Ratio $i_{tot}$ | Standard Bearings $F_{R\,N}$ OHL [lb] | Standard Bearings $F_{A\,N}$ Thrust [lb] | Heavy Duty Bearings (VL) $F_{R\,VL}$ OHL [lb] | Heavy Duty Bearings (VL) $F_{A\,VL}$ Thrust [lb] | Model Type | Weight [lb] | Dim. Page |
|---|---|---|---|---|---|---|---|---|---|---|---|---|
| **2.0** | 41 | 3062 | 3.6 | III | 40.36 | 2500 | 3263 | 3375 | 2788 | **SK 9032.1 - 90L/4** | 159 | 508 |
| | 35 | 3619 | 3.5 | III | 47.7 | 2599 | 3263 | 3375 | 2891 | SK 9032.1 - 90LH/4 | | |
| | 33 | 3789 | 3.3 | III | 49.94 | 2617 | 3263 | 3375 | 2905 | | | |
| | 28 | 4489 | 3.1 | III | 59.17 | 2723 | 3263 | 3375 | 3011 | | | |
| | 26 | 4861 | 2.8 | III | 64.08 | 2759 | 3263 | 3375 | 3044 | | | |
| | 22 | 5759 | 2.4 | III | 75.91 | 2855 | 3263 | 3375 | 3139 | | | |
| | 20 | 6385 | 2.1 | III | 84.17 | 2903 | 3263 | 3375 | 3188 | | | |
| | 18 | 7093 | 1.9 | II | 93.5 | 2939 | 3263 | 3375 | 3231 | | | |
| | 15 | 8403 | 1.6 | II | 110.77 | 2918 | 3263 | 3375 | 3299 | | | |
| | 14 | 8929 | 1.5 | II | 117.7 | 2844 | 3263 | 3375 | 3299 | | | |
| | 12 | 10578 | 1.3 | I | 139.44 | 2570 | 3263 | 3375 | 3357 | | | |
| | 10 | 12042 | 1.1 | I | 158.74 | 2250 | 3263 | 3375 | 3353 | | | |
| | 8.8 | 14267 | 1.0 | I | 188.06 | 1535 | 3263 | 3375 | 3368 | | | |
| | 8.4 | 14979 | 0.9 | * | 197.45 | 1179 | 3263 | 3375 | 3337 | | | |
| | 7.1 | 17746 | 0.8 | * | 233.92 | | 3263 | 2792 | 3314 | | | |
| | 19 | 6557 | 3.2 | III | 86.43 | 6260 | 9000 | 6300 | 5171 | **SK 9042.1 - 90L/4** | 262 | 516 |
| | 17 | 7249 | 3.1 | III | 95.56 | 6239 | 9000 | 6300 | 5299 | SK 9042.1 - 90LH/4 | | |
| | 14 | 8936 | 2.4 | III | 117.79 | 6179 | 9000 | 6300 | 5524 | | | |
| | 10 | 12535 | 1.1 | I | 165.24 | 6005 | 9000 | 6300 | 5841 | | | |
| | 8.5 | 14802 | 1.7 | II | 195.12 | 5864 | 9000 | 6300 | 5947 | | | |
| | 7.1 | 17828 | 1.4 | II | 235.01 | 5630 | 9000 | 6300 | 6120 | | | |
| | 6.1 | 20766 | 1.2 | I | 273.73 | 5348 | 9000 | 6300 | 6149 | | | |
| | 5 | 25011 | 1.0 | I | 329.69 | 4829 | 9000 | 6300 | 6269 | | | |
| | 11 | 11012 | 2.9 | III | 145.16 | 8550 | 10125 | 8550 | 9284 | **SK 9052.1 - 90L/4** | 428 | 524 |
| | 6.7 | 18742 | 2.3 | III | 247.06 | 8282 | 10125 | 8550 | 10125 | SK 9052.1 - 90LH/4 | | |
| | 5.7 | 21970 | 1.9 | II | 289.61 | 8114 | 10125 | 8550 | 10125 | | | |
| | 4.8 | 26469 | 1.6 | II | 348.91 | 7828 | 10125 | 8550 | 10125 | **SK 9053.1 - 90L/4** | 467 | 528 |
| | 3.6 | 34788 | 1.2 | I | 458.57 | 7115 | 10125 | 8550 | 10125 | SK 9053.1 - 90LH/4 | | |
| | 8.5 | 14878 | 4.1 | III | 196.12 | 14702 | 11250 | 14850 | 11250 | **SK 9072.1/42 - 90L/4** | 849 | 552 |
| | 6.2 | 20436 | 3.6 | III | 269.39 | 14603 | 11250 | 14850 | 11250 | SK 9072.1/42 - 90LH/4 | | |
| | 5.3 | 23601 | 3.2 | III | 311.1 | 14531 | 11250 | 14850 | 11250 | **SK 9072.1/32 - 90L/4** | 811 | 552 |
| | 4.3 | 29274 | 2.6 | III | 385.88 | 14378 | 11250 | 14850 | 11250 | SK 9072.1/32 - 90LH/4 | | |
| | 3.5 | 35899 | 2.1 | III | 473.22 | 14153 | 11250 | 14850 | 11250 | | | |
| | 2.8 | 45386 | 1.7 | II | 598.27 | 13743 | 11250 | 14850 | 11250 | | | |
| | 2.2 | 58228 | 1.3 | I | 767.55 | 13007 | 11250 | 14850 | 11250 | | | |
| | 1.7 | 73866 | 1.0 | I | 973.69 | 11770 | 11250 | 14850 | 11250 | | | |
| | 1.4 | 88756 | 0.8 | * | 1169.97 | 10132 | 11250 | 14850 | 11250 | | | |
| | 3.7 | 33638 | 3.4 | III | 443.41 | 21375 | 13500 | 21375 | 13500 | **SK 9082.1/42 - 90L/4** | 1422 | 552 |
| | 2.8 | 45773 | 2.5 | III | 603.37 | 21332 | 13500 | 21375 | 13500 | SK 9082.1/42 - 90LH/4 | | |
| | 2.4 | 53443 | 2.2 | III | 704.48 | 21166 | 13500 | 21375 | 13500 | | | |
| | 2 | 64132 | 1.8 | II | 845.38 | 20887 | 13500 | 21375 | 13500 | | | |

(AGMA Class I = $f_B$ 1.0 - 1.39 II = $f_B$ 1.4 - 1.99 III = $f_B$ ≥ 2.0 * = $f_B$ < 1.0) **(Model Type in blue is an Energy Efficient motor)**


Send Quote Requests to info@automatedpt.com
Call +1(800)985-6929 To Order or Order Online At Nordgearmotors.com

# 2.0 hp, 3.0 hp Gearmotors



DRIVESYSTEMS

| Motor Power $P_n$ [hp] | Output Speed $n_2$ [rpm] | Output Torque $T_2$ [lb-in] | Service Factor $f_B$ | AGMA Class | Gear Ratio $i_{tot}$ | Standard Bearings $F_{RN}$ OHL [lb] | Standard Bearings $F_{AN}$ Thrust [lb] | Heavy Duty Bearings (VL) $F_{RVL}$ OHL [lb] | Heavy Duty Bearings (VL) $F_{AVL}$ Thrust [lb] | Model Type | Weight [lb] | Dim. Page |
|---|---|---|---|---|---|---|---|---|---|---|---|---|
| 2.0 | 1.6 | 77210 | 1.5 | II | 1017.77 | 20473 | 13500 | 21375 | 13500 | **SK 9082.1/42 - 90L/4** | 1422 | 552 |
| | 1.1 | 111350 | 1.0 | I | 1467.8 | 18952 | 13500 | 21375 | 13500 | **SK 9082.1/42 - 90LH/4** | | |
| | 1.8 | 68874 | 2.6 | III | 907.88 | 26836 | 14625 | 27000 | 14625 | **SK 9086.1/52 - 90L/4** | 2029 | 552 |
| | 1.4 | 91200 | 1.9 | II | 1202.18 | 26208 | 14625 | 27000 | 14625 | **SK 9086.1/52 - 90LH/4** | | |
| | 1.1 | 111017 | 1.6 | II | 1463.4 | 25488 | 14625 | 27000 | 14625 | | | |
| | 1.5 | 84966 | 3.3 | III | 1120 | 35019 | 15750 | 36000 | 15750 | **SK 9092.1/52 - 90L/4** | 3285 | 552 |
| | 1.2 | 108088 | 2.6 | III | 1424.8 | 34598 | 15750 | 36000 | 15750 | **SK 9092.1/52 - 90LH/4** | | |
| | 0.81 | 155677 | 2.8 | III | 2052.10 | 49500 | 22500 | | | **SK 9096.1/63 - 90L/4** | 4165 | 553 |
| | 0.72 | 175717 | 2.5 | III | 2316.27 | 49500 | 22500 | | | **SK 9096.1/63 - 90LH/4** | | |
| | 0.62 | 203239 | 2.2 | III | 2679.06 | 49500 | 22500 | | | | | |
| | 0.52 | 243526 | 1.8 | II | 3210.12 | 49500 | 22500 | | | | | |
| | 0.45 | 280119 | 1.6 | II | 3692.48 | 49500 | 22500 | | | | | |
| | 0.37 | 336935 | 1.3 | I | 4441.42 | 49500 | 22500 | | | | | |
| | 0.30 | 422980 | 1.0 | I | 5575.65 | 49500 | 22500 | | | | | |
| | 0.25 | 508773 | 0.9 | * | 6706.55 | 49500 | 22500 | | | | | |
| 3.0 | 322 | 588 | 2.2 | III | 5.3 | 968 | 1366 | | | **SK 92372 - 100L/4** | 75 | 472 |
| | 286 | 663 | 2.1 | III | 5.97 | 997 | 1422 | | | **SK 92372 - 100LH/4** | | |
| | 263 | 721 | 2.0 | III | 6.49 | 1017 | 1447 | | | | | |
| | 233 | 813 | 1.8 | II | 7.32 | 1022 | 1510 | | | | | |
| | 206 | 921 | 1.7 | II | 8.29 | 1008 | 1555 | | | | | |
| | 180 | 1052 | 1.5 | II | 9.47 | 990 | 1620 | | | | | |
| | 157 | 1204 | 1.3 | I | 10.84 | 965 | 1661 | | | | | |
| | 150 | 1265 | 1.4 | II | 11.39 | 954 | 1670 | | | | | |
| | 131 | 1445 | 1.2 | I | 13.01 | 916 | 1721 | | | | | |
| | 100 | 1894 | 1.1 | I | 17.06 | 790 | 1744 | | | | | |
| | 89 | 2133 | 1.0 | I | 19.21 | 698 | 1780 | | | | | |
| | 196 | 967 | 2.9 | III | 8.71 | 1361 | 2129 | | | **SK 92672 - 100L/4** | 111 | 476 |
| | 174 | 1086 | 2.6 | III | 9.78 | 1352 | 2205 | | | **SK 92672 - 100LH/4** | | |
| | 155 | 1224 | 2.4 | III | 11.02 | 1341 | 2302 | | | | | |
| | 135 | 1404 | 2.1 | III | 12.64 | 1323 | 2394 | | | | | |
| | 121 | 1563 | 1.9 | II | 14.08 | 1305 | 2464 | | | | | |
| | 106 | 1785 | 1.8 | II | 16.08 | 1276 | 2619 | | | | | |
| | 94 | 2008 | 1.4 | II | 18.08 | 1242 | 2592 | | | | | |
| | 84 | 2262 | 1.3 | I | 20.37 | 1199 | 2682 | | | | | |
| | 73 | 2585 | 1.3 | I | 23.28 | 1132 | 2700 | | | | | |
| | 64 | 2948 | 1.0 | I | 26.55 | 1040 | 2700 | | | | | |
| | 57 | 3321 | 0.9 | * | 29.91 | 920 | 2700 | | | | | |
| | 50 | 3794 | 0.9 | * | 34.17 | 716 | 2700 | | | | | |

(AGMA Class I = $f_B$ 1.0 - 1.39 II = $f_B$ 1.4 - 1.99 III = $f_B$ ≥ 2.0 * = $f_B$ < 1.0) **(Model Type in blue is an Energy Efficient motor)**


Send Quote Requests to info@automatedpt.com
Call +1(800)985-6929 To Order or Order Online At Nordgearmotors.com

DRIVESYSTEMS

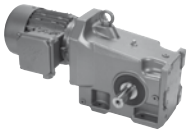



# 3.0 hp Gearmotors

| Motor Power $P_n$ [hp] | Output Speed $n_2$ [rpm] | Output Torque $T_2$ [lb-in] | Service Factor $f_B$ | AGMA Class | Gear Ratio $i_{tot}$ | Standard Bearings $F_{R\,N}$ OHL [lb] | Standard Bearings $F_{A\,N}$ Thrust [lb] | Heavy Duty Bearings (VL) $F_{R\,VL}$ OHL [lb] | Heavy Duty Bearings (VL) $F_{A\,VL}$ Thrust [lb] | Model Type | Weight [lb] | Dim. Page |
|---|---|---|---|---|---|---|---|---|---|---|---|---|
| **3.0** | 211 | 898 | 1.8 | II | 8.09 | 1609 | 2966 | 2025 | 2966 | **SK 9012.1 - 100L/4** | 106 | 484 |
| | 185 | 1025 | 1.7 | II | 9.23 | 1602 | 3058 | 2025 | 3058 | SK 9012.1 - 100LH/4 | | |
| | 157 | 1205 | 1.5 | II | 10.85 | 1589 | 3173 | 2025 | 3173 | | | |
| | 139 | 1358 | 1.4 | II | 12.23 | 1575 | 3254 | 2025 | 3254 | | | |
| | 111 | 1699 | 2.0 | III | 15.3 | 1537 | 3470 | 2025 | 3470 | | | |
| | 98 | 1938 | 1.7 | II | 17.45 | 1508 | 3566 | 2025 | 3566 | | | |
| | 82 | 2317 | 1.5 | II | 20.87 | 1447 | 3713 | 2025 | 3713 | | | |
| | 70 | 2724 | 1.3 | I | 24.53 | 1368 | 3827 | 2025 | 3827 | | | |
| | 62 | 3070 | 1.2 | I | 27.65 | 1285 | 3902 | 2023 | 3902 | | | |
| | 54 | 3492 | 1.0 | I | 31.45 | 1161 | 3971 | 1949 | 3971 | | | |
| | 49 | 3865 | 0.9 | * | 34.81 | 1026 | 4003 | 1870 | 4003 | | | |
| | 41 | 4625 | 0.8 | * | 41.65 | 592 | 4106 | 1672 | 4106 | | | |
| | 136 | 1389 | 3.0 | III | 12.51 | 2025 | 3308 | 2025 | 3308 | **SK 9016.1 - 100L/4** | 108 | 492 |
| | 113 | 1677 | 2.7 | III | 15.1 | 2025 | 3465 | 2025 | 3465 | SK 9016.1 - 100LH/4 | | |
| | 98 | 1938 | 2.5 | III | 17.45 | 2025 | 3566 | 2025 | 3566 | | | |
| | 83 | 2277 | 2.3 | III | 20.51 | 2025 | 3683 | 2025 | 3683 | | | |
| | 74 | 2566 | 1.8 | II | 23.11 | 2025 | 3760 | 2025 | 3760 | | | |
| | 65 | 2919 | 1.8 | II | 26.29 | 2025 | 3845 | 2025 | 3845 | | | |
| | 56 | 3389 | 1.6 | II | 30.52 | 2018 | 3933 | 2025 | 3933 | | | |
| | 49 | 3865 | 1.4 | II | 34.81 | 1949 | 4003 | 2025 | 4003 | | | |
| | 42 | 4544 | 1.2 | I | 40.92 | 1829 | 4075 | 2025 | 4075 | | | |
| | 37 | 5120 | 1.1 | I | 46.11 | 1701 | 4113 | 2025 | 4113 | | | |
| | 33 | 5823 | 0.9 | * | 52.44 | 1510 | 4147 | 2025 | 4147 | | | |
| | 27 | 7103 | 0.8 | * | 63.97 | 977 | 4154 | 2025 | 4154 | | | |
| | 137 | 1380 | 2.9 | III | 12.43 | 1627 | 2516 | | | **SK 92772 - 100L/4** | 127 | 480 |
| | 123 | 1545 | 2.8 | III | 13.91 | 1676 | 2597 | | | SK 92772 - 100LH/4 | | |
| | 109 | 1732 | 2.4 | III | 15.6 | 1717 | 2678 | | | | | |
| | 96 | 1980 | 2.4 | III | 17.83 | 1775 | 2700 | | | | | |
| | 86 | 2191 | 2.4 | III | 19.73 | 1771 | 2700 | | | | | |
| | 77 | 2467 | 2.2 | III | 22.22 | 1744 | 2700 | | | | | |
| | 67 | 2819 | 2.0 | III | 25.39 | 1708 | 2700 | | | | | |
| | 60 | 3158 | 1.7 | II | 28.44 | 1665 | 2700 | | | | | |
| | 53 | 3558 | 1.6 | II | 32.04 | 1609 | 2700 | | | | | |
| | 47 | 4065 | 1.4 | II | 36.61 | 1521 | 2700 | | | | | |
| | 153 | 1236 | 3.0 | III | 11.13 | 1521 | 2466 | 2700 | 1899 | **SK 9022.1 - 100L/4** | 123 | 500 |
| | 136 | 1389 | 2.8 | III | 12.51 | 1564 | 2567 | 2700 | 1949 | SK 9022.1 - 100LH/4 | | |
| | 117 | 1617 | 2.6 | III | 14.56 | 1627 | 2700 | 2700 | 2016 | | | |
| | 105 | 1810 | 2.4 | III | 16.3 | 1667 | 2700 | 2700 | 2063 | | | |
| | 97 | 1945 | 3.3 | III | 17.52 | 1694 | 2700 | 2700 | 2097 | | | |
| | 86 | 2213 | 3.0 | III | 19.93 | 1771 | 2700 | 2700 | 2180 | | | |
| | 76 | 2488 | 2.8 | III | 22.41 | 1816 | 2700 | 2700 | 2230 | | | |
| | 69 | 2727 | 2.4 | III | 24.56 | 1838 | 2700 | 2700 | 2259 | | | |
| | 65 | 2895 | 2.6 | III | 26.07 | 1872 | 2700 | 2700 | 2297 | | | |
| | 58 | 3242 | 2.3 | III | 29.2 | 1910 | 2700 | 2700 | 2340 | | | |
| | 54 | 3484 | 2.1 | III | 31.38 | 1892 | 2700 | 2700 | 2369 | | | |
| | 51 | 3693 | 1.7 | II | 33.26 | 1861 | 2700 | 2700 | 2374 | | | |

(AGMA Class I = $f_B$ 1.0 - 1.39 II = $f_B$ 1.4 - 1.99 III = $f_B$ ≥ 2.0 * = $f_B$ < 1.0) **(Model Type in blue is an Energy Efficient motor)**


Send Quote Requests to info@automatedpt.com
Call +1(800)985-6929 To Order or Order Online At Nordgearmotors.com

# 3.0 hp Gearmotors



DRIVESYSTEMS

| Motor Power $P_n$ [hp] | Output Speed $n_2$ [rpm] | Output Torque $T_2$ [lb-in] | Service Factor $f_B$ | AGMA Class | Gear Ratio $i_{tot}$ | Standard Bearings $F_{RN}$ OHL [lb] | Standard Bearings $F_{AN}$ Thrust [lb] | Heavy Duty Bearings (VL) $F_{RVL}$ OHL [lb] | Heavy Duty Bearings (VL) $F_{AVL}$ Thrust [lb] | Model Type | Weight [lb] | Dim. Page |
|---|---|---|---|---|---|---|---|---|---|---|---|---|
| 3.0 | 43 | 4416 | 1.7 | II | 39.77 | 1737 | 2700 | 2660 | 2446 | **SK 9022.1 - 100L/4** | 123 | 500 |
| | 38 | 4964 | 1.5 | II | 44.71 | 1620 | 2700 | 2585 | 2477 | SK 9022.1 - 100LH/4 | | |
| | 35 | 5442 | 1.4 | II | 49.01 | 1499 | 2700 | 2511 | 2477 | | | |
| | 33 | 5776 | 1.3 | I | 52.02 | 1400 | 2700 | 2453 | 2518 | | | |
| | 29 | 6468 | 1.2 | I | 58.25 | 1143 | 2700 | 2318 | 2531 | | | |
| | 26 | 7375 | 1.0 | I | 66.42 | 590 | 2700 | 2099 | 2547 | | | |
| | 22 | 8760 | 0.9 | * | 78.89 | | 2700 | 1643 | 2547 | | | |
| | 57 | 3293 | 3.1 | III | 29.66 | 2171 | 3263 | 3375 | 2464 | **SK 9032.1 - 100L/4** | 168 | 508 |
| | 48 | 3954 | 2.5 | III | 35.61 | 2248 | 3263 | 3375 | 2540 | SK 9032.1 - 100LH/4 | | |
| | 45 | 4225 | 2.7 | III | 38.05 | 2286 | 3263 | 3375 | 2576 | | | |
| | 42 | 4481 | 3.1 | III | 40.36 | 2311 | 3263 | 3375 | 2610 | | | |
| | 36 | 5296 | 2.6 | III | 47.7 | 2376 | 3263 | 3375 | 2669 | | | |
| | 34 | 5545 | 2.5 | III | 49.94 | 2381 | 3263 | 3375 | 2678 | | | |
| | 29 | 6570 | 2.1 | III | 59.17 | 2450 | 3263 | 3375 | 2747 | | | |
| | 27 | 7115 | 1.9 | II | 64.08 | 2459 | 3263 | 3375 | 2756 | | | |
| | 22 | 8429 | 1.6 | II | 75.91 | 2502 | 3263 | 3375 | 2810 | | | |
| | 20 | 9346 | 1.5 | II | 84.17 | 2513 | 3263 | 3375 | 2833 | | | |
| | 18 | 10382 | 1.3 | I | 93.5 | 2504 | 3263 | 3375 | 2815 | | | |
| | 15 | 12300 | 1.1 | I | 110.77 | 2185 | 3263 | 3375 | 2833 | | | |
| | 11 | 17626 | 0.8 | * | 158.74 | | 3263 | 2828 | 2678 | | | |
| | 31 | 6184 | 3.8 | III | 55.69 | 6271 | 9000 | 6300 | 4448 | **SK 9042.1 - 100L/4** | 271 | 516 |
| | 27 | 7023 | 3.3 | III | 63.25 | 6246 | 9000 | 6300 | 4550 | SK 9042.1 - 100LH/4 | | |
| | 25 | 7618 | 3.3 | III | 68.61 | 6228 | 9000 | 6300 | 4644 | | | |
| | 22 | 8459 | 2.9 | III | 76.18 | 6197 | 9000 | 6300 | 4727 | | | |
| | 20 | 9597 | 2.6 | III | 86.43 | 6152 | 9000 | 6300 | 4835 | | | |
| | 18 | 10611 | 2.3 | III | 95.56 | 6107 | 9000 | 6300 | 4914 | | | |
| | 14 | 13079 | 1.6 | II | 117.79 | 5974 | 9000 | 6300 | 5058 | | | |
| | 13 | 14745 | 1.7 | II | 132.79 | 5868 | 9000 | 6300 | 5090 | | | |
| | 11 | 17759 | 1.4 | II | 159.94 | 5636 | 9000 | 6300 | 5213 | | | |
| | 8.7 | 21666 | 1.1 | I | 195.12 | 5249 | 9000 | 6300 | 5204 | | | |
| | 7.3 | 26095 | 0.9 | * | 235.01 | 4669 | 9000 | 6300 | 5263 | | | |
| | 17 | 11370 | 3.1 | III | 102.4 | 8550 | 10125 | 8550 | 8179 | **SK 9052.1 - 100L/4** | 437 | 524 |
| | 14 | 13328 | 3.1 | III | 120.03 | 8498 | 10125 | 8550 | 8501 | SK 9052.1 - 100LH/4 | | |
| | 12 | 16118 | 2.0 | III | 145.16 | 8397 | 10125 | 8550 | 8890 | | | |
| | 10 | 18792 | 2.3 | III | 169.24 | 8280 | 10125 | 8550 | 9194 | | | |
| | 8.6 | 22028 | 1.9 | II | 198.38 | 8111 | 10125 | 8550 | 9509 | | | |
| | 6.9 | 27433 | 1.5 | II | 247.06 | 7758 | 10125 | 8550 | 9914 | | | |
| | 5.9 | 32158 | 1.3 | I | 289.61 | 7369 | 10125 | 8550 | 10125 | | | |
| | 8.2 | 22967 | 3.3 | III | 206.84 | 14546 | 11250 | 14850 | 11250 | **SK 9072.1 - 100L/4** | 745 | 532 |
| | 6.9 | 27289 | 2.8 | III | 245.76 | 14436 | 11250 | 14850 | 11250 | SK 9072.1 - 100LH/4 | | |
| | 5.5 | 34544 | 2.2 | III | 311.1 | 14202 | 11250 | 14850 | 11250 | **SK 9072.1/32 - 100L/4** | 820 | 552 |
| | 4.4 | 42847 | 1.8 | II | 385.88 | 13865 | 11250 | 14850 | 11250 | SK 9072.1/32 - 100LH/4 | | |
| | 3.6 | 52545 | 1.4 | II | 473.22 | 13361 | 11250 | 14850 | 11250 | | | |
| | 2.8 | 66430 | 1.1 | I | 598.27 | 12411 | 11250 | 14850 | 11250 | | | |
| | 2.2 | 85227 | 0.9 | * | 767.55 | 10573 | 11250 | 14850 | 11250 | | | |

(AGMA Class I = $f_B$ 1.0 - 1.39 II = $f_B$ 1.4 - 1.99 III = $f_B$ ≥ 2.0 * = $f_B$ < 1.0) **(Model Type in blue is an Energy Efficient motor)**


Send Quote Requests to info@automatedpt.com
Call +1(800)985-6929 To Order or Order Online At Nordgearmotors.com

DRIVESYSTEMS

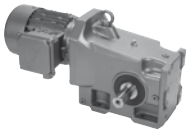



# 3.0 hp, 5.0 hp Gearmotors

| Motor Power $P_n$ [hp] | Output Speed $n_2$ [rpm] | Output Torque $T_2$ [lb-in] | Service Factor $f_B$ | AGMA Class | Gear Ratio $i_{tot}$ | Standard Bearings $F_{RN}$ OHL [lb] | Standard Bearings $F_{AN}$ Thrust [lb] | Heavy Duty Bearings (VL) $F_{RVL}$ OHL [lb] | Heavy Duty Bearings (VL) $F_{AVL}$ Thrust [lb] | Model Type | Weight [lb] | Dim. Page |
|---|---|---|---|---|---|---|---|---|---|---|---|---|
| 3.0 | 6 | 31651 | 3.6 | III | 285.05 | 21375 | 13500 | 21375 | 13500 | **SK 9082.1/42 - 100L/4** | 1431 | 552 |
| | 4.5 | 42149 | 2.7 | III | 379.59 | 21375 | 13500 | 21375 | 13500 | SK 9082.1/42 - 100LH/4 | | |
| | 3.8 | 49235 | 2.3 | III | 443.41 | 21260 | 13500 | 21375 | 13500 | | | |
| | 2.8 | 66997 | 1.7 | II | 603.37 | 20804 | 13500 | 21375 | 13500 | | | |
| | 2.4 | 78224 | 1.5 | II | 704.48 | 20437 | 13500 | 21375 | 13500 | | | |
| | 2 | 93869 | 1.2 | I | 845.38 | 19814 | 13500 | 21375 | 13500 | | | |
| | 1.7 | 113011 | 1.0 | I | 1017.77 | 18862 | 13500 | 21375 | 13500 | | | |
| | 2.4 | 79298 | 2.2 | III | 714.15 | 26566 | 14625 | 27000 | 14625 | **SK 9086.1/52 - 100L/4** | 2037 | 552 |
| | 1.9 | 100809 | 1.8 | II | 907.88 | 25880 | 14625 | 27000 | 14625 | SK 9086.1/52 - 100LH/4 | | |
| | 1.4 | 133487 | 1.3 | I | 1202.18 | 24464 | 14625 | 27000 | 14625 | | | |
| | 1.2 | 162492 | 1.1 | I | 1463.4 | 22772 | 14625 | 27000 | 14625 | | | |
| | 0.95 | 198319 | 0.9 | * | 1786.05 | 19958 | 14625 | 27000 | 14625 | | | |
| | 2.8 | 67524 | 4.2 | III | 608.12 | 35267 | 15750 | 36000 | 15750 | **SK 9092.1/52 - 100L/4** | 3294 | 552 |
| | 2.4 | 78437 | 3.6 | III | 706.4 | 35118 | 15750 | 36000 | 15750 | SK 9092.1/52 - 100LH/4 | | |
| | 2 | 93982 | 3.0 | III | 846.4 | 34868 | 15750 | 36000 | 15750 | | | |
| | 1.5 | 124362 | 2.3 | III | 1120 | 34238 | 15750 | 36000 | 15750 | | | |
| | 1.2 | 158206 | 1.8 | II | 1424.8 | 33309 | 15750 | 36000 | 15750 | | | |
| | 0.95 | 199353 | 1.4 | II | 1795.36 | 31824 | 15750 | 36000 | 15750 | | | |
| | 1.3 | 150329 | 2.9 | III | 1353.86 | 49500 | 22500 | | | **SK 9096.1/62 - 100L/4** | 4154 | 553 |
| | 1.1 | 180289 | 2.5 | III | 1623.67 | 49500 | 22500 | | | SK 9096.1/62 - 100LH/4 | | |
| | 0.96 | 197004 | 2.2 | III | 1774.21 | 49500 | 22500 | | | **SK 9096.1/63 - 100L/4** | 4174 | 553 |
| | 0.83 | 227860 | 1.9 | II | 2052.10 | 49500 | 22500 | | | SK 9096.1/63 - 100LH/4 | | |
| | 0.74 | 257193 | 1.7 | II | 2316.27 | 49500 | 22500 | | | | | |
| | 0.64 | 297477 | 1.5 | II | 2679.06 | 49500 | 22500 | | | | | |
| | 0.53 | 356444 | 1.2 | I | 3210.12 | 49500 | 22500 | | | | | |
| | 0.46 | 410004 | 1.1 | I | 3692.48 | 49500 | 22500 | | | | | |
| | 0.38 | 493165 | 0.9 | * | 4441.42 | 49500 | 22500 | | | | | |
| 5.0 | 325 | 968 | 1.3 | I | 5.3 | 891 | 1159 | | | **SK 92372 - 100LA/4** | 82 | 472 |
| | 289 | 1091 | 1.3 | I | 5.97 | 911 | 1195 | | | SK 92372 - 112MH/4 | | |
| | 266 | 1186 | 1.2 | I | 6.49 | 925 | 1195 | | | | | |
| | 236 | 1338 | 1.1 | I | 7.32 | 938 | 1231 | | | | | |
| | 208 | 1515 | 1.0 | I | 8.29 | 900 | 1242 | | | | | |
| | 182 | 1731 | 0.9 | * | 9.47 | 842 | 1258 | | | | | |
| | 159 | 1981 | 0.8 | * | 10.84 | 758 | 1258 | | | | | |
| | 151 | 2082 | 0.8 | * | 11.39 | 718 | 1231 | | | | | |
| | 291 | 1082 | 2.1 | III | 5.92 | 1249 | 1679 | | | **SK 92672 - 100LA/4** | 118 | 476 |
| | 254 | 1239 | 2.0 | III | 6.78 | 1289 | 1744 | | | SK 92672 - 112MH/4 | | |
| | 223 | 1413 | 1.9 | II | 7.73 | 1321 | 1791 | | | | | |
| | 198 | 1592 | 1.8 | II | 8.71 | 1301 | 1836 | | | | | |
| | 176 | 1787 | 1.6 | II | 9.78 | 1276 | 1872 | | | | | |
| | 157 | 2014 | 1.5 | II | 11.02 | 1242 | 1940 | | | | | |
| | 136 | 2310 | 1.3 | I | 12.64 | 1188 | 1978 | | | | | |
| | 123 | 2573 | 1.2 | I | 14.08 | 1134 | 1996 | | | | | |

(AGMA Class I = $f_B$ 1.0 - 1.39 II = $f_B$ 1.4 - 1.99 III = $f_B$ ≥ 2.0 * = $f_B$ < 1.0) **(Model Type in blue is an Energy Efficient motor)**


Send Quote Requests to info@automatedpt.com
Call +1(800)985-6929 To Order or Order Online At Nordgearmotors.com

# 5.0 hp Gearmotors



DRIVESYSTEMS

| Motor Power $P_n$ [hp] | Output Speed $n_2$ [rpm] | Output Torque $T_2$ [lb-in] | Service Factor $f_B$ | AGMA Class | Gear Ratio $i_{tot}$ | Standard Bearings $F_{RN}$ OHL [lb] | Standard Bearings $F_{AN}$ Thrust [lb] | Heavy Duty Bearings (VL) $F_{RVL}$ OHL [lb] | Heavy Duty Bearings (VL) $F_{AVL}$ Thrust [lb] | Model Type | Weight [lb] | Dim. Page |
|---|---|---|---|---|---|---|---|---|---|---|---|---|
| 5.0 | 107 | 2939 | 1.1 | I | 16.08 | 1042 | 2140 | | | SK 92672 - 100LA/4 | 118 | 476 |
| | 95 | 3304 | 0.9 | * | 18.08 | 927 | 1971 | | | SK 92672 - 112MH/4 | | |
| | 85 | 3723 | 0.8 | * | 20.37 | 752 | 2012 | | | | | |
| | 74 | 4255 | 0.8 | * | 23.28 | 380 | 2142 | | | | | |
| | 213 | 1478 | 1.1 | I | 8.09 | 1562 | 2781 | 2025 | 2781 | SK 9012.1 - 100LA/4 | 112 | 484 |
| | 187 | 1687 | 1.0 | I | 9.23 | 1539 | 2849 | 2025 | 2849 | SK 9012.1 - 112MH/4 | | |
| | 159 | 1983 | 0.9 | * | 10.85 | 1501 | 2927 | 2025 | 2927 | | | |
| | 141 | 2235 | 0.9 | * | 12.23 | 1460 | 2979 | 2025 | 2979 | | | |
| | 113 | 2796 | 1.2 | I | 15.3 | 1352 | 3173 | 2025 | 3173 | | | |
| | 99 | 3189 | 1.1 | I | 17.45 | 1253 | 3224 | 2005 | 3224 | | | |
| | 83 | 3814 | 0.9 | * | 20.87 | 1046 | 3319 | 1881 | 3319 | | | |
| | 70 | 4483 | 0.8 | * | 24.53 | 700 | 3350 | 1712 | 3350 | | | |
| | 138 | 2286 | 1.8 | II | 12.51 | 2025 | 3047 | 2025 | 3047 | SK 9016.1 - 100LA/4 | 115 | 492 |
| | 114 | 2760 | 1.7 | II | 15.1 | 2025 | 3161 | 2025 | 3161 | SK 9016.1 - 112MH/4 | | |
| | 99 | 3189 | 1.5 | II | 17.45 | 2025 | 3224 | 2025 | 3224 | | | |
| | 84 | 3748 | 1.4 | II | 20.51 | 1967 | 3285 | 2025 | 3285 | | | |
| | 75 | 4223 | 1.1 | I | 23.11 | 1888 | 3319 | 2025 | 3319 | | | |
| | 66 | 4805 | 1.1 | I | 26.29 | 1773 | 3335 | 2025 | 3335 | | | |
| | 57 | 5578 | 1.0 | I | 30.52 | 1582 | 3350 | 2025 | 3350 | | | |
| | 50 | 6362 | 0.8 | * | 34.81 | 1325 | 3328 | 2025 | 3328 | | | |
| | 269 | 1171 | 2.1 | III | 6.41 | 1289 | 1823 | | | SK 92772 - 100LA/4 | 134 | 480 |
| | 227 | 1389 | 2.0 | III | 7.6 | 1341 | 1913 | | | SK 92772 - 112MH/4 | | |
| | 202 | 1563 | 1.9 | II | 8.55 | 1382 | 1973 | | | | | |
| | 179 | 1760 | 1.9 | II | 9.63 | 1418 | 2052 | | | | | |
| | 159 | 1988 | 1.8 | II | 10.88 | 1456 | 2115 | | | | | |
| | 139 | 2272 | 1.8 | II | 12.43 | 1499 | 2180 | | | | | |
| | 124 | 2542 | 1.7 | II | 13.91 | 1528 | 2230 | | | | | |
| | 111 | 2851 | 1.5 | II | 15.6 | 1555 | 2259 | | | | | |
| | 97 | 3258 | 1.5 | II | 17.83 | 1589 | 2318 | | | | | |
| | 87 | 3606 | 1.5 | II | 19.73 | 1600 | 2318 | | | | | |
| | 78 | 4061 | 1.4 | II | 22.22 | 1523 | 2345 | | | | | |
| | 68 | 4640 | 1.2 | I | 25.39 | 1402 | 2390 | | | | | |
| | 61 | 5198 | 1.0 | I | 28.44 | 1258 | 2318 | | | | | |
| | 54 | 5855 | 1.0 | I | 32.04 | 1037 | 2318 | | | | | |
| | 47 | 6691 | 0.9 | * | 36.61 | 590 | 2300 | | | | | |
| | 155 | 2034 | 1.8 | II | 11.13 | 1393 | 2205 | 2700 | 1766 | SK 9022.1 - 100LA/4 | 130 | 500 |
| | 138 | 2286 | 1.7 | II | 12.51 | 1422 | 2273 | 2700 | 1805 | SK 9022.1 - 112MH/4 | | |
| | 118 | 2661 | 1.6 | II | 14.56 | 1456 | 2345 | 2700 | 1845 | | | |
| | 106 | 2979 | 1.5 | II | 16.3 | 1476 | 2396 | 2700 | 1879 | | | |
| | 98 | 3202 | 2.0 | III | 17.52 | 1485 | 2439 | 2700 | 1897 | | | |
| | 87 | 3642 | 1.8 | II | 19.93 | 1559 | 2592 | 2700 | 1973 | | | |
| | 77 | 4096 | 1.7 | II | 22.41 | 1577 | 2630 | 2700 | 1996 | | | |
| | 70 | 4488 | 1.5 | II | 24.56 | 1573 | 2626 | 2651 | 1996 | | | |
| | 66 | 4764 | 1.6 | II | 26.07 | 1591 | 2682 | 2615 | 2021 | | | |
| | 59 | 5336 | 1.4 | II | 29.2 | 1526 | 2700 | 2529 | 2034 | | | |

(AGMA Class I = $f_B$ 1.0 - 1.39 II = $f_B$ 1.4 - 1.99 III = $f_B$ ≥ 2.0 * = $f_B$ < 1.0) **(Model Type in blue is an Energy Efficient motor)**


Send Quote Requests to info@automatedpt.com
Call +1(800)985-6929 To Order or Order Online At Nordgearmotors.com

DRIVESYSTEMS

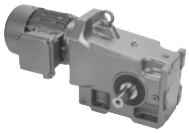



# 5.0 hp Gearmotors

| Motor Power $P_n$ [hp] | Output Speed $n_2$ [rpm] | Output Torque $T_2$ [lb-in] | Service Factor $f_B$ | AGMA Class | Gear Ratio $i_{tot}$ | Standard Bearings $F_{R\,N}$ OHL [lb] | Standard Bearings $F_{A\,N}$ Thrust [lb] | Heavy Duty Bearings (VL) $F_{R\,VL}$ OHL [lb] | Heavy Duty Bearings (VL) $F_{A\,VL}$ Thrust [lb] | Model Type | Weight [lb] | Dim. Page |
|---|---|---|---|---|---|---|---|---|---|---|---|---|
| 5.0 | 55 | 5735 | 1.3 | I | 31.38 | 1411 | 2700 | 2459 | 2041 | **SK 9022.1 - 100LA/4** | 130 | 500 |
| | 52 | 6078 | 1.0 | I | 33.26 | 1296 | 2673 | 2396 | 2018 | SK 9022.1 - 112MH/4 | | |
| | 43 | 7268 | 1.0 | I | 39.77 | 684 | 2700 | 2129 | 2034 | | | |
| | 39 | 8171 | 0.9 | * | 44.71 | - | 2673 | 1861 | 2018 | | | |
| | 35 | 8957 | 0.8 | * | 49.01 | - | 2567 | 1559 | 1960 | | | |
| | 33 | 9507 | 0.8 | * | 52.02 | - | 2597 | 1285 | 1980 | | | |
| | 203 | 1550 | 5.1 | III | 8.48 | 1472 | 2174 | 3375 | 1742 | **SK 9032.1 - 100LA/4** | 174 | 508 |
| | 161 | 1961 | 4.0 | III | 10.73 | 1559 | 2333 | 3375 | 1832 | SK 9032.1 - 112MH/4 | | |
| | 136 | 2317 | 3.9 | III | 12.68 | 1613 | 2455 | 3375 | 1895 | | | |
| | 128 | 2465 | 4.9 | III | 13.49 | 1667 | 2556 | 3375 | 1946 | | | |
| | 108 | 2932 | 4.2 | III | 16.04 | 1732 | 2684 | 3375 | 2015 | | | |
| | 101 | 3121 | 4.1 | III | 17.08 | 1746 | 2720 | 3375 | 2036 | | | |
| | 85 | 3697 | 3.5 | III | 20.23 | 1809 | 2860 | 3375 | 2102 | | | |
| | 72 | 4370 | 3.1 | III | 23.91 | 1856 | 2977 | 3375 | 2153 | | | |
| | 69 | 4574 | 3.0 | III | 25.03 | 1863 | 2977 | 3375 | 2160 | | | |
| | 58 | 5420 | 2.5 | III | 29.66 | 1908 | 3103 | 3375 | 2212 | | | |
| | 48 | 6508 | 2.1 | III | 35.61 | 1924 | 3164 | 3375 | 2241 | | | |
| | 45 | 6954 | 2.0 | III | 38.05 | 1944 | 3200 | 3375 | 2266 | | | |
| | 43 | 7376 | 1.9 | II | 40.36 | 1949 | 3231 | 3375 | 2266 | | | |
| | 36 | 8717 | 1.6 | II | 47.7 | 1944 | 3263 | 3375 | 2273 | | | |
| | 35 | 9127 | 1.5 | II | 49.94 | 1922 | 3231 | 3375 | 2266 | | | |
| | 29 | 10814 | 1.3 | I | 59.17 | 1906 | 3231 | 3375 | 2255 | | | |
| | 27 | 11711 | 1.2 | I | 64.08 | 1865 | 3164 | 3375 | 2219 | | | |
| | 23 | 13873 | 1.0 | I | 75.91 | 1694 | 3103 | 3375 | 2180 | | | |
| | 20 | 15382 | 0.9 | * | 84.17 | 907 | 3011 | 3375 | 2133 | | | |
| | 18 | 17087 | 0.8 | * | 93.5 | - | 2833 | 2977 | 2045 | | | |
| | 50 | 6285 | 2.1 | III | 34.39 | 6269 | 9000 | 6300 | 3753 | **SK 9042.1 - 100LA/4** | 278 | 516 |
| | 43 | 7409 | 2.5 | III | 40.54 | 6235 | 9000 | 6300 | 3857 | SK 9042.1 - 112MH/4 | | |
| | 36 | 8712 | 2.4 | III | 47.67 | 6188 | 9000 | 6300 | 3958 | | | |
| | 31 | 10178 | 2.3 | III | 55.69 | 6127 | 9000 | 6300 | 4046 | | | |
| | 27 | 11559 | 2.0 | III | 63.25 | 6059 | 9000 | 6300 | 4079 | | | |
| | 25 | 12539 | 2.0 | III | 68.61 | 6005 | 9000 | 6300 | 4151 | | | |
| | 23 | 13922 | 1.8 | II | 76.18 | 5922 | 9000 | 6300 | 4185 | | | |
| | 20 | 15795 | 1.6 | II | 86.43 | 5794 | 9000 | 6300 | 4219 | | | |
| | 18 | 17464 | 1.4 | II | 95.56 | 5661 | 9000 | 6300 | 4239 | | | |
| | 15 | 21527 | 1.0 | I | 117.79 | 5265 | 9000 | 6300 | 4226 | | | |
| | 13 | 24268 | 1.0 | I | 132.79 | 4930 | 9000 | 6300 | 4120 | | | |
| | 11 | 29230 | 0.8 | * | 159.94 | 4131 | 9000 | 6300 | 4086 | | | |
| | 28 | 11407 | 2.5 | III | 62.42 | 8550 | 10125 | 8550 | 6935 | **SK 9052.1 - 100LA/4** | 443 | 524 |
| | 24 | 13202 | 2.4 | III | 72.24 | 8503 | 10125 | 8550 | 7171 | SK 9052.1 - 112MH/4 | | |
| | 20 | 16113 | 2.2 | III | 88.17 | 8397 | 10125 | 8550 | 7502 | | | |
| | 17 | 18714 | 1.9 | II | 102.4 | 8282 | 10125 | 8550 | 7733 | | | |
| | 14 | 21936 | 1.9 | II | 120.03 | 8116 | 10125 | 8550 | 7972 | | | |
| | 12 | 26529 | 1.2 | I | 145.16 | 7823 | 10125 | 8550 | 8258 | | | |
| | 10 | 30929 | 1.4 | II | 169.24 | 7477 | 10125 | 8550 | 8431 | | | |
| | 8.7 | 36255 | 1.2 | I | 198.38 | 6959 | 10125 | 8550 | 8651 | | | |

(AGMA Class I = $f_B$ 1.0 - 1.39 II = $f_B$ 1.4 - 1.99 III = $f_B$ ≥ 2.0 * = $f_B$ < 1.0) **(Model Type in blue is an Energy Efficient motor)**



Send Quote Requests to info@automatedpt.com
Call +1(800)985-6929 To Order or Order Online At Nordgearmotors.com

# 5.0 hp Gearmotors



DRIVESYSTEMS

| Motor Power $P_n$ [hp] | Output Speed $n_2$ [rpm] | Output Torque $T_2$ [lb-in] | Service Factor $f_B$ | AGMA Class | Gear Ratio $i_{tot}$ | Standard Bearings $F_{RN}$ OHL [lb] | Standard Bearings $F_{AN}$ Thrust [lb] | Heavy Duty Bearings (VL) $F_{RVL}$ OHL [lb] | Heavy Duty Bearings (VL) $F_{AVL}$ Thrust [lb] | Model Type | Weight [lb] | Dim. Page |
|---|---|---|---|---|---|---|---|---|---|---|---|---|
| 5.0 | 7 | 45151 | 0.9 | * | 247.06 | 5769 | 10125 | 8550 | 8834 | **SK 9052.1 - 100LA/4** | 443 | 524 |
| | 6 | 52927 | 0.8 | * | 289.61 | 4160 | 10125 | 8550 | 9005 | SK 9052.1 - 112MH/4 | | |
| | 16 | 20136 | 2.3 | III | 110.18 | 14609 | 11250 | 14850 | 9916 | **SK 9072.1 - 100LA/4** | 752 | 532 |
| | 13 | 25015 | 2.4 | III | 136.88 | 14497 | 11250 | 14850 | 10287 | SK 9072.1 - 112MH/4 | | |
| | 8.3 | 37801 | 2.0 | III | 206.84 | 14081 | 11250 | 14850 | 11250 | | | |
| | 7 | 44914 | 1.7 | II | 245.76 | 13766 | 11250 | 14850 | 11250 | | | |
| | 5.5 | 56855 | 1.3 | I | 311.1 | 13095 | 11250 | 14850 | 11250 | **SK 9072.1/32 - 100LA/4** | 827 | 552 |
| | 4.5 | 70521 | 1.1 | I | 385.88 | 12071 | 11250 | 14850 | 11250 | SK 9072.1/32 - 112MH/4 | | |
| | 3.6 | 86483 | 0.9 | * | 473.22 | 10420 | 11250 | 14850 | 11250 | | | |
| | 14 | 22502 | 2.9 | III | 123.13 | 21375 | 13500 | 21375 | 13500 | **SK 9082.1/52 - 100LA/4** | 1493 | 552 |
| | 12 | 26717 | 2.9 | III | 146.19 | 21375 | 13500 | 21375 | 13500 | SK 9082.1/52 - 112MH/4 | | |
| | 9.5 | 33278 | 2.9 | III | 182.09 | 21375 | 13500 | 21375 | 13500 | | | |
| | 7 | 44888 | 2.6 | III | 245.62 | 21350 | 13500 | 21375 | 13500 | | | |
| | 4.6 | 69107 | 2.6 | III | 378.14 | 26829 | 14625 | 27000 | 14625 | **SK 9086.1/52 - 100LA/4** | 2044 | 552 |
| | 4 | 79196 | 2.2 | III | 433.35 | 26568 | 14625 | 27000 | 14625 | SK 9086.1/52 - 112MH/4 | | |
| | 2.8 | 113885 | 1.6 | II | 623.16 | 25369 | 14625 | 27000 | 14625 | | | |
| | 2.4 | 130514 | 1.4 | II | 714.15 | 24613 | 14625 | 27000 | 14625 | | | |
| | 1.9 | 165919 | 1.1 | I | 907.88 | 22543 | 14625 | 27000 | 14625 | | | |
| | 1.4 | 219703 | 0.8 | * | 1202.18 | 17753 | 14625 | 27000 | 14625 | | | |
| | 3.9 | 80678 | 2.5 | III | 441.46 | 35087 | 15750 | 36000 | 15750 | **SK 9092.1/52 - 100LA/4** | 3301 | 552 |
| | 2.8 | 111136 | 2.5 | III | 608.12 | 34535 | 15750 | 36000 | 15750 | SK 9092.1/52 - 112MH/4 | | |
| | 2.4 | 129097 | 2.2 | III | 706.4 | 34121 | 15750 | 36000 | 15750 | | | |
| | 2 | 154683 | 1.8 | II | 846.4 | 33417 | 15750 | 36000 | 15750 | | | |
| | 1.5 | 204684 | 1.4 | II | 1120 | 31601 | 15750 | 36000 | 15750 | | | |
| | 1.2 | 260388 | 1.1 | I | 1424.8 | 28787 | 15750 | 36000 | 15750 | | | |
| | 0.96 | 328109 | 0.9 | * | 1795.36 | 23812 | 15750 | 36000 | 15750 | | | |
| | 2.1 | 149231 | 3.0 | III | 816.57 | 49500 | 22500 | | | **SK 9096.1/62 - 100 LA/4** | 4161 | 553 |
| | 1.8 | 178973 | 2.5 | III | 979.31 | 49500 | 22500 | | | SK 9096.1/62 - 112MH/4 | | |
| | 1.5 | 212948 | 2.1 | III | 1165.22 | 49500 | 22500 | | | | | |
| | 1.3 | 247423 | 1.8 | II | 1353.86 | 49500 | 22500 | | | | | |
| | 1.1 | 296732 | 1.5 | II | 1623.67 | 49500 | 22500 | | | | | |
| | 0.96 | 197004 | 2.2 | III | 1774.21 | 49500 | 22500 | | | **SK 9096.1/63 - 100LA/4** | 4174 | 553 |
| | 0.83 | 227860 | 1.9 | II | 2052.10 | 49500 | 22500 | | | SK 9096.1/63 - 112MH/4 | | |
| | 0.74 | 257193 | 1.7 | II | 2316.27 | 49500 | 22500 | | | | | |
| | 0.64 | 297477 | 1.5 | II | 2679.06 | 49500 | 22500 | | | | | |
| | 0.53 | 356444 | 1.2 | I | 3210.12 | 49500 | 22500 | | | | | |
| | 0.46 | 410004 | 1.1 | I | 3692.48 | 49500 | 22500 | | | | | |
| | 0.38 | 493165 | 0.9 | * | 4441.42 | 49500 | 22500 | | | | | |

(AGMA Class I = $f_B$ 1.0 - 1.39 II = $f_B$ 1.4 - 1.99 III = $f_B$ ≥ 2.0 * = $f_B$ < 1.0) **(Model Type in blue is an Energy Efficient motor)**


Send Quote Requests to info@automatedpt.com
Call +1(800)985-6929 To Order or Order Online At Nordgearmotors.com

DRIVESYSTEMS

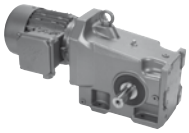



# 7.5 hp Gearmotors

| Motor Power $P_n$ [hp] | Output Speed $n_2$ [rpm] | Output Torque $T_2$ [lb-in] | Service Factor $f_B$ | AGMA Class | Gear Ratio $i_{tot}$ | Standard Bearings $F_{R\,N}$ OHL [lb] | Standard Bearings $F_{A\,N}$ Thrust [lb] | Heavy Duty Bearings (VL) $F_{R\,VL}$ OHL [lb] | Heavy Duty Bearings (VL) $F_{A\,VL}$ Thrust [lb] | Model Type | Weight [lb] | Dim. Page |
|---|---|---|---|---|---|---|---|---|---|---|---|---|
| 7.5 | 358 | 1321 | 1.8 | II | 4.85 | 1116 | 1395 | | | SK 92672 - 132S/4 | 169 | 476 |
| | 318 | 1487 | 1.6 | II | 5.46 | 1143 | 1445 | | | SK 92672 - 132SH/4 | | |
| | 293 | 1612 | 1.5 | II | 5.92 | 1159 | 1440 | | | | | |
| | 256 | 1846 | 1.4 | II | 6.78 | 1184 | 1467 | | | | | |
| | 224 | 2105 | 1.3 | I | 7.73 | 1206 | 1472 | | | | | |
| | 199 | 2372 | 1.2 | I | 8.71 | 1177 | 1483 | | | | | |
| | 177 | 2663 | 1.1 | I | 9.78 | 1114 | 1469 | | | | | |
| | 157 | 3001 | 1.0 | I | 11.02 | 1024 | 1501 | | | | | |
| | 137 | 3442 | 0.9 | * | 12.64 | 875 | 1472 | | | | | |
| | 123 | 3834 | 0.8 | * | 14.08 | 695 | 1440 | | | | | |
| | 361 | 1310 | 2.8 | III | 4.81 | 1132 | 1512 | | | SK 92772 - 132S/4 | 184 | 480 |
| | 320 | 1479 | 2.5 | III | 5.43 | 1166 | 1559 | | | SK 92772 - 132SH/4 | | |
| | 284 | 1664 | 2.2 | III | 6.11 | 1195 | 1607 | | | | | |
| | 271 | 1745 | 2.3 | III | 6.41 | 1202 | 1613 | | | | | |
| | 228 | 2070 | 2.0 | III | 7.6 | 1242 | 1665 | | | | | |
| | 203 | 2328 | 1.9 | II | 8.55 | 1271 | 1694 | | | | | |
| | 180 | 2622 | 1.7 | II | 9.63 | 1294 | 1733 | | | | | |
| | 159 | 2963 | 1.5 | II | 10.88 | 1314 | 1762 | | | | | |
| | 140 | 3385 | 1.3 | I | 12.43 | 1334 | 1782 | | | | | |
| | 125 | 3788 | 1.3 | I | 13.91 | 1348 | 1784 | | | | | |
| | 111 | 4248 | 1.0 | I | 15.6 | 1350 | 1762 | | | | | |
| | 97 | 4855 | 1.0 | I | 17.83 | 1350 | 1744 | | | | | |
| | 88 | 5373 | 1.0 | I | 19.73 | 1206 | 1658 | | | | | |
| | 78 | 6051 | 0.9 | * | 22.22 | 956 | 1627 | | | | | |
| | 68 | 6914 | 0.8 | * | 25.39 | 367 | 1559 | | | | | |
| | 205 | 2309 | 3.4 | III | 8.48 | 1370 | 1971 | 3375 | 1643 | SK 9032.1 - 132S/4 | 225 | 508 |
| | 162 | 2922 | 2.7 | III | 10.73 | 1424 | 2088 | 3375 | 1706 | SK 9032.1 - 132SH/4 | | |
| | 137 | 3453 | 2.6 | III | 12.68 | 1458 | 2153 | 3375 | 1744 | | | |
| | 129 | 3673 | 3.3 | III | 13.49 | 1517 | 2264 | 3375 | 1805 | | | |
| | 108 | 4377 | 2.9 | III | 16.04 | 1554 | 2344 | 3375 | 1854 | | | |
| | 102 | 4651 | 2.8 | III | 17.08 | 1557 | 2358 | 3375 | 1859 | | | |
| | 86 | 5509 | 2.4 | III | 20.23 | 1586 | 2432 | 3375 | 1890 | | | |
| | 73 | 6511 | 2.1 | III | 23.91 | 1591 | 2455 | 3375 | 1908 | | | |
| | 69 | 6816 | 1.9 | II | 25.03 | 1577 | 2439 | 3375 | 1906 | | | |
| | 58 | 8077 | 1.6 | II | 29.66 | 1577 | 2455 | 3375 | 1908 | | | |
| | 49 | 9697 | 1.0 | I | 35.61 | 1512 | 2383 | 3375 | 1870 | | | |
| | 46 | 10361 | 1.1 | I | 38.05 | 1508 | 2383 | 3375 | 1870 | | | |
| | 43 | 10990 | 1.2 | I | 40.36 | 1481 | 2358 | 3375 | 1854 | | | |
| | 36 | 12989 | 1.1 | I | 47.7 | 1382 | 2219 | 3375 | 1793 | | | |
| | 35 | 13599 | 1.0 | I | 49.94 | 1323 | 2129 | 3375 | 1742 | | | |
| | 29 | 16112 | 0.9 | * | 59.17 | | 1964 | 3220 | 1656 | | | |
| | 27 | 17449 | 0.8 | * | 64.08 | | 1773 | 2878 | 1559 | | | |

(AGMA Class I = $f_B$ 1.0 - 1.39 II = $f_B$ 1.4 - 1.99 III = $f_B$ ≥ 2.0 * = $f_B$ < 1.0) **(Model Type in blue is an Energy Efficient motor)**



Send Quote Requests to info@automatedpt.com
Call +1(800)985-6929 To Order or Order Online At Nordgearmotors.com

# 7.5 hp Gearmotors



DRIVESYSTEMS



| Motor Power $P_n$ [hp] | Output Speed $n_2$ [rpm] | Output Torque $T_2$ [lb-in] | Service Factor $f_B$ | AGMA Class | Gear Ratio $i_{tot}$ | Standard Bearings $F_{RN}$ OHL [lb] | Standard Bearings $F_{AN}$ Thrust [lb] | Heavy Duty Bearings (VL) $F_{RVL}$ OHL [lb] | Heavy Duty Bearings (VL) $F_{AVL}$ Thrust [lb] | Model Type | Weight [lb] | Dim. Page |
|---|---|---|---|---|---|---|---|---|---|---|---|---|
| 7.5 | 129 | 3649 | 3.5 | III | 13.4 | 5225 | 7211 | 6300 | 2880 | **SK 9042.1 - 132S/4** | 329 | 516 |
| | 111 | 4264 | 3.2 | III | 15.66 | 5438 | 7459 | 6300 | 2975 | SK 9042.1 - 132SH/4 | | |
| | 95 | 4956 | 3.9 | III | 18.2 | 5695 | 7814 | 6300 | 3112 | | | |
| | 85 | 5533 | 3.7 | III | 20.32 | 5839 | 8003 | 6300 | 3177 | | | |
| | 73 | 6505 | 3.5 | III | 23.89 | 6073 | 8305 | 6300 | 3265 | | | |
| | 62 | 7600 | 3.2 | III | 27.91 | 6228 | 8561 | 6300 | 3355 | | | |
| | 55 | 8632 | 1.3 | I | 31.7 | 6192 | 8741 | 6300 | 3382 | | | |
| | 50 | 9365 | 2.6 | III | 34.39 | 6163 | 8926 | 6300 | 3443 | | | |
| | 43 | 11039 | 2.2 | III | 40.54 | 6086 | 9000 | 6300 | 3497 | | | |
| | 36 | 12981 | 1.9 | II | 47.67 | 5981 | 9000 | 6300 | 3542 | | | |
| | 31 | 15165 | 1.6 | II | 55.69 | 5839 | 9000 | 6300 | 3566 | | | |
| | 27 | 17223 | 1.3 | I | 63.25 | 5681 | 9000 | 6300 | 3503 | | | |
| | 25 | 18683 | 1.3 | I | 68.61 | 5553 | 9000 | 6300 | 3542 | | | |
| | 23 | 20744 | 1.2 | I | 76.18 | 5351 | 9000 | 6300 | 3515 | | | |
| | 20 | 23536 | 1.1 | I | 86.43 | 5027 | 9000 | 6300 | 3458 | | | |
| | 18 | 26022 | 1.0 | I | 95.56 | 4680 | 9000 | 6300 | 3398 | | | |
| | 55 | 8518 | 3.6 | III | 31.28 | 8550 | 10125 | 8550 | 5666 | **SK 9052.1 - 132S/4** | 494 | 524 |
| | 48 | 9860 | 3.4 | III | 36.21 | 8550 | 10125 | 8550 | 5879 | SK 9052.1 - 132SH/4 | | |
| | 44 | 10816 | 3.9 | III | 39.72 | 8550 | 10125 | 8550 | 6003 | | | |
| | 39 | 12243 | 3.5 | III | 44.96 | 8532 | 10125 | 8550 | 6167 | | | |
| | 32 | 14857 | 2.9 | III | 54.56 | 8444 | 10125 | 8550 | 6419 | | | |
| | 28 | 16997 | 2.5 | III | 62.42 | 8361 | 10125 | 8550 | 6597 | | | |
| | 24 | 19671 | 2.2 | III | 72.24 | 8237 | 10125 | 8550 | 6779 | | | |
| | 20 | 24009 | 1.8 | II | 88.17 | 7992 | 10125 | 8550 | 7022 | | | |
| | 17 | 27884 | 1.3 | I | 102.4 | 7724 | 10125 | 8550 | 7160 | | | |
| | 14 | 32685 | 1.3 | I | 120.03 | 7319 | 10125 | 8550 | 7358 | | | |
| | 10 | 46085 | 0.9 | * | 169.24 | 5612 | 10125 | 8550 | 7524 | | | |
| | 8.7 | 54020 | 0.8 | * | 198.38 | 3854 | 10125 | 8550 | 7610 | | | |
| | 25 | 19121 | 3.9 | III | 70.22 | 14630 | 11250 | 14850 | 8568 | **SK 9072.1 - 132S/4** | 803 | 532 |
| | 22 | 21700 | 3.5 | III | 79.69 | 14576 | 11250 | 14850 | 8807 | SK 9072.1 - 132SH/4 | | |
| | 19 | 24908 | 3.0 | III | 91.47 | 14499 | 11250 | 14850 | 9079 | | | |
| | 16 | 30003 | 2.5 | III | 110.18 | 14355 | 11250 | 14850 | 9419 | | | |
| | 13 | 37273 | 1.6 | II | 136.88 | 14101 | 11250 | 14850 | 9619 | | | |
| | 11 | 42826 | 1.8 | II | 157.27 | 13865 | 11250 | 14850 | 9963 | | | |
| | 9.3 | 50883 | 1.5 | II | 186.86 | 13455 | 11250 | 14850 | 10287 | | | |
| | 8.4 | 56324 | 1.3 | I | 206.84 | 13129 | 11250 | 14850 | 10337 | | | |
| | 7.1 | 66922 | 1.1 | I | 245.76 | 12371 | 11250 | 14850 | 10604 | | | |
| | 15 | 31710 | 3.6 | III | 116.45 | 21375 | 13500 | 21375 | 13500 | **SK 9082.1 - 132S/4** | 1376 | 536 |
| | 14 | 33347 | 3.5 | III | 122.46 | 21375 | 13500 | 21375 | 13500 | SK 9082.1 - 132SH/4 | | |
| | 12 | 40508 | 2.8 | III | 148.76 | 21375 | 13500 | 21375 | 13500 | | | |
| | 7.1 | 66530 | 1.7 | II | 244.32 | 20817 | 13500 | 21375 | 13500 | | | |
| | 5.8 | 80821 | 1.4 | II | 296.8 | 20342 | 13500 | 21375 | 13500 | | | |

(AGMA Class I = $f_B$ 1.0 - 1.39 II = $f_B$ 1.4 - 1.99 III = $f_B$ ≥ 2.0 * = $f_B$ < 1.0) **(Model Type in blue is an Energy Efficient motor)**


Send Quote Requests to info@automatedpt.com
Call +1(800)985-6929 To Order or Order Online At Nordgearmotors.com

NORD DRIVESYSTEMS

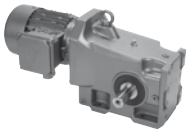



# 7.5 hp, 10 hp Gearmotors

| Motor Power $P_n$ [hp] | Output Speed $n_2$ [rpm] | Output Torque $T_2$ [lb-in] | Service Factor $f_B$ | AGMA Class | Gear Ratio $i_{tot}$ | Standard Bearings $F_{R\,N}$ OHL [lb] | Standard Bearings $F_{A\,N}$ Thrust [lb] | Heavy Duty Bearings (VL) $F_{R\,VL}$ OHL [lb] | Heavy Duty Bearings (VL) $F_{A\,VL}$ Thrust [lb] | Model Type | Weight [lb] | Dim. Page |
|---|---|---|---|---|---|---|---|---|---|---|---|---|
| **7.5** | 6.1 | 77621 | 1.5 | II | 285.05 | 20457 | 13500 | 21375 | 13500 | **SK 9082.1/42 - 132S/4** | 1488 | 552 |
| | 4.6 | 103365 | 1.1 | I | 379.59 | 19368 | 13500 | 21375 | 13500 | SK 9082.1/42 - 132SH/4 | | |
| | 3.9 | 120744 | 1.0 | I | 443.41 | 18410 | 13500 | 21375 | 13500 | | | |
| | 8.9 | 52838 | 3.3 | III | 194.04 | 27000 | 14625 | 27000 | 14625 | **SK 9086.1 - 132S/4** | 1927 | 540 |
| | 7.5 | 62805 | 2.8 | III | 230.64 | 26973 | 14625 | 27000 | 14625 | SK 9086.1 - 132SH/4 | | |
| | 6.4 | 73651 | 2.4 | III | 270.47 | 26717 | 14625 | 27000 | 14625 | **SK 9086.1/52 - 132S/4** | 2095 | 552 |
| | 4.6 | 102970 | 1.7 | II | 378.14 | 25799 | 14625 | 27000 | 14625 | SK 9086.1/52 - 132SH/4 | | |
| | 4 | 118004 | 1.5 | II | 433.35 | 25193 | 14625 | 27000 | 14625 | | | |
| | 2.8 | 169691 | 1.0 | I | 623.16 | 22280 | 14625 | 27000 | 14625 | | | |
| | 2.4 | 194468 | 0.9 | * | 714.15 | 20309 | 14625 | 27000 | 14625 | | | |
| | 6.2 | 76453 | 3.7 | III | 280.76 | 35147 | 15750 | 36000 | 15750 | **SK 9092.1/52 - 132S/4** | 3352 | 552 |
| | 4.5 | 105021 | 2.7 | III | 385.67 | 34661 | 15750 | 36000 | 15750 | SK 9092.1/52 - 132SH/4 | | |
| | 3.9 | 120213 | 2.4 | III | 441.46 | 34335 | 15750 | 36000 | 15750 | | | |
| | 2.9 | 165595 | 1.7 | II | 608.12 | 33071 | 15750 | 36000 | 15750 | | | |
| | 2.5 | 192358 | 1.5 | II | 706.4 | 32108 | 15750 | 36000 | 15750 | | | |
| | 2 | 230481 | 1.2 | I | 846.4 | 30413 | 15750 | 36000 | 15750 | | | |
| | 1.5 | 304984 | 0.9 | * | 1120 | 25751 | 15750 | 36000 | 15750 | | | |
| | 3.2 | 146591 | 3.0 | III | 538.33 | 49500 | 22500 | | | **SK 9096.1/62 - 132S/4** | 4212 | 553 |
| | 2.9 | 165462 | 2.7 | III | 607.63 | 49500 | 22500 | | | SK 9096.1/62 - 132SH/4 | | |
| | 2.5 | 191377 | 2.3 | III | 702.80 | 49500 | 22500 | | | | | |
| | 2.1 | 222358 | 2.0 | III | 816.57 | 49500 | 22500 | | | | | |
| | 1.8 | 266673 | 1.7 | II | 979.31 | 49500 | 22500 | | | | | |
| | 1.5 | 317298 | 1.4 | II | 1165.22 | 49500 | 22500 | | | | | |
| | 1.3 | 368666 | 1.2 | I | 1353.86 | 49500 | 22500 | | | | | |
| **10** | 205 | 3080 | 2.5 | III | 8.48 | 1269 | 1784 | 3375 | 1544 | **SK 9032.1 - 132M/4** | 249 | 508 |
| | 162 | 3899 | 2.0 | III | 10.73 | 1294 | 1850 | 3375 | 1582 | SK 9032.1 - 132MH/4 | | |
| | 137 | 4608 | 1.9 | II | 12.68 | 1298 | 1868 | 3375 | 1602 | | | |
| | 129 | 4902 | 2.4 | III | 13.49 | 1366 | 1985 | 3375 | 1665 | | | |
| | 108 | 5836 | 2.2 | III | 16.04 | 1382 | 2025 | 3375 | 1688 | | | |
| | 102 | 6207 | 2.1 | III | 17.08 | 1361 | 2003 | 3375 | 1679 | | | |
| | 86 | 7352 | 1.8 | II | 20.23 | 1352 | 2007 | 3375 | 1688 | | | |
| | 73 | 8689 | 1.6 | II | 23.91 | 1319 | 1964 | 3375 | 1663 | | | |
| | 69 | 9096 | 1.5 | II | 25.03 | 1280 | 1924 | 3375 | 1638 | | | |
| | 58 | 10778 | 1.2 | I | 29.66 | 1222 | 1850 | 3375 | 1604 | | | |
| | 49 | 12941 | 0.8 | * | 35.61 | 1080 | 1636 | 3375 | 1501 | | | |
| | 46 | 13827 | 0.8 | * | 38.05 | 1040 | 1602 | 3375 | 1481 | | | |
| | 43 | 14667 | 0.9 | * | 40.36 | 986 | 1523 | 3375 | 1449 | | | |
| | 36 | 17334 | 0.8 | * | 47.7 | | 1231 | 2909 | 1298 | | | |
| | 35 | 18148 | 0.8 | * | 49.94 | | 1089 | 2671 | 1233 | | | |

(AGMA Class I = $f_B$ 1.0 - 1.39 II = $f_B$ 1.4 - 1.99 III = $f_B$ ≥ 2.0 * = $f_B$ < 1.0) **(Model Type in blue is an Energy Efficient motor)**




Send Quote Requests to info@automatedpt.com
Call +1(800)985-6929 To Order or Order Online At Nordgearmotors.com

# 10 hp Gearmotors



DRIVESYSTEMS

| Motor Power $P_n$ [hp] | Output Speed $n_2$ [rpm] | Output Torque $T_2$ [lb-in] | Service Factor $f_B$ | AGMA Class | Gear Ratio $i_{tot}$ | Standard Bearings $F_{RN}$ OHL [lb] | Standard Bearings $F_{AN}$ Thrust [lb] | Heavy Duty Bearings (VL) $F_{RVL}$ OHL [lb] | Heavy Duty Bearings (VL) $F_{AVL}$ Thrust [lb] | Model Type | Weight [lb] | Dim. Page |
|---|---|---|---|---|---|---|---|---|---|---|---|---|
| 10 | 196 | 3209 | 3.0 | III | 8.83 | 4608 | 6354 | 6300 | 2549 | **SK 9042.1 - 132M/4** | 353 | 516 |
| | 185 | 3412 | 3.0 | III | 9.39 | 4680 | 6446 | 6300 | 2579 | SK 9042.1 - 132MH/4 | | |
| | 170 | 3710 | 2.9 | III | 10.21 | 4784 | 6581 | 6300 | 2621 | | | |
| | 152 | 4143 | 2.7 | III | 11.4 | 4919 | 6732 | 6300 | 2675 | | | |
| | 129 | 4870 | 2.6 | III | 13.4 | 5108 | 6995 | 6300 | 2754 | | | |
| | 111 | 5691 | 2.4 | III | 15.66 | 5301 | 7211 | 6300 | 2826 | | | |
| | 95 | 6614 | 2.9 | III | 18.2 | 5549 | 7531 | 6300 | 2950 | | | |
| | 85 | 7384 | 2.7 | III | 20.32 | 5690 | 7702 | 6300 | 3004 | | | |
| | 73 | 8682 | 2.6 | III | 23.89 | 5888 | 7940 | 6300 | 3062 | | | |
| | 62 | 10143 | 2.4 | III | 27.91 | 6080 | 8147 | 6300 | 3101 | | | |
| | 55 | 11520 | 1.0 | I | 31.7 | 6062 | 8251 | 6300 | 3096 | | | |
| | 50 | 12497 | 2.0 | III | 34.39 | 6008 | 8399 | 6300 | 3141 | | | |
| | 43 | 14732 | 1.7 | II | 40.54 | 5868 | 8561 | 6300 | 3146 | | | |
| | 36 | 17323 | 1.4 | II | 47.67 | 5672 | 8685 | 6300 | 3125 | | | |
| | 31 | 20238 | 1.2 | I | 55.69 | 5402 | 8771 | 6300 | 3071 | | | |
| | 27 | 22985 | 1.0 | I | 63.25 | 5094 | 8685 | 6300 | 2941 | | | |
| | 25 | 24933 | 1.0 | I | 68.61 | 4838 | 8784 | 6300 | 2941 | | | |
| | 23 | 27684 | 0.9 | * | 76.18 | 4412 | 8757 | 6300 | 2853 | | | |
| | 20 | 31409 | 0.8 | * | 86.43 | 3670 | 8658 | 6300 | 2711 | | | |
| | 55 | 11367 | 2.7 | III | 31.28 | 8550 | 10125 | 8550 | 5504 | **SK 9052.1 - 132M/4** | 518 | 524 |
| | 48 | 13159 | 2.6 | III | 36.21 | 8505 | 10125 | 8550 | 5675 | SK 9052.1 - 132MH/4 | | |
| | 44 | 14434 | 2.9 | III | 39.72 | 8460 | 10125 | 8550 | 5785 | | | |
| | 39 | 16339 | 2.6 | III | 44.96 | 8388 | 10125 | 8550 | 5924 | | | |
| | 32 | 19827 | 2.1 | III | 54.56 | 8228 | 10125 | 8550 | 6138 | | | |
| | 28 | 22683 | 1.9 | II | 62.42 | 8073 | 10125 | 8550 | 6269 | | | |
| | 24 | 26252 | 1.6 | II | 72.24 | 7844 | 10125 | 8550 | 6399 | | | |
| | 20 | 32041 | 1.3 | I | 88.17 | 7380 | 10125 | 8550 | 6577 | | | |
| | 17 | 37212 | 0.9 | * | 102.4 | 6854 | 10125 | 8550 | 6617 | | | |
| | 14 | 43619 | 0.9 | * | 120.03 | 6010 | 10125 | 8550 | 6714 | | | |
| | 30 | 21237 | 3.3 | III | 58.44 | 14585 | 11250 | 14850 | 7961 | **SK 9072.1 - 132M/4** | 827 | 532 |
| | 25 | 25518 | 2.9 | III | 70.22 | 14483 | 11250 | 14850 | 8260 | SK 9072.1 - 132MH/4 | | |
| | 22 | 28959 | 2.6 | III | 79.69 | 14387 | 11250 | 14850 | 8460 | | | |
| | 19 | 33240 | 2.3 | III | 91.47 | 14249 | 11250 | 14850 | 8681 | | | |
| | 16 | 40040 | 1.9 | II | 110.18 | 13988 | 11250 | 14850 | 8948 | | | |
| | 11 | 57152 | 1.3 | I | 157.27 | 13077 | 11250 | 14850 | 9254 | | | |
| | 9.3 | 67905 | 1.1 | I | 186.86 | 12292 | 11250 | 14850 | 9464 | | | |
| | 18 | 34836 | 3.3 | III | 95.86 | 21375 | 13500 | 21375 | 13500 | **SK 9082.1 - 132M/4** | 1400 | 536 |
| | 15 | 42318 | 2.7 | III | 116.45 | 21375 | 13500 | 21375 | 13500 | SK 9082.1 - 132MH/4 | | |
| | 14 | 44502 | 2.6 | III | 122.46 | 21357 | 13500 | 21375 | 13500 | | | |
| | 12 | 54060 | 2.1 | III | 148.76 | 21152 | 13500 | 21375 | 13500 | | | |
| | 7.1 | 88786 | 1.3 | I | 244.32 | 20030 | 13500 | 21375 | 13500 | | | |
| | 5.8 | 107857 | 1.0 | I | 296.8 | 19141 | 13500 | 21375 | 13500 | | | |
| | 8.9 | 70514 | 2.5 | III | 194.04 | 26795 | 14625 | 27000 | 14625 | **SK 9086.1 - 132M/4** | 1951 | 540 |
| | 7.5 | 83815 | 2.1 | III | 230.64 | 26438 | 14625 | 27000 | 14625 | SK 9086.1 - 132MH/4 | | |

(AGMA Class I = $f_B$ 1.0 - 1.39 II = $f_B$ 1.4 - 1.99 III = $f_B$ ≥ 2.0 * = $f_B$ < 1.0) **(Model Type in blue is an Energy Efficient motor)**


Send Quote Requests to info@automatedpt.com
Call +1(800)985-6929 To Order or Order Online At Nordgearmotors.com

DRIVESYSTEMS

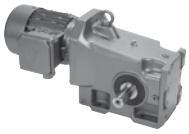



# 10 hp, 15 hp Gearmotors

| Motor Power $P_n$ [hp] | Output Speed $n_2$ [rpm] | Output Torque $T_2$ [lb-in] | Service Factor $f_B$ | AGMA Class | Gear Ratio $i_{tot}$ | Standard Bearings $F_{RN}$ OHL [lb] | Standard Bearings $F_{AN}$ Thrust [lb] | Heavy Duty Bearings (VL) $F_{RVL}$ OHL [lb] | Heavy Duty Bearings (VL) $F_{AVL}$ Thrust [lb] | Model Type | Weight [lb] | Dim. Page |
|---|---|---|---|---|---|---|---|---|---|---|---|---|
| 10 | 6.4 | 98289 | 1.8 | II | 270.47 | 25970 | 14625 | 27000 | 14625 | **SK 9086.1/52 - 132M/4** | 2119 | 552 |
| | 4.6 | 137416 | 1.3 | I | 378.14 | 24260 | 14625 | 27000 | 14625 | SK 9086.1/52 - 132MH/4 | | |
| | 4 | 157480 | 1.1 | I | 433.35 | 23099 | 14625 | 27000 | 14625 | | | |
| | 2.8 | 226457 | 0.8 | * | 623.16 | 16945 | 14625 | 27000 | 14625 | | | |
| | 6.2 | 102028 | 2.8 | III | 280.76 | 34720 | 15750 | 36000 | 15750 | **SK 9092.1/52 - 132M/4** | 3376 | 552 |
| | 4.5 | 140153 | 2.0 | III | 385.67 | 33836 | 15750 | 36000 | 15750 | SK 9092.1/52 - 132MH/4 | | |
| | 3.9 | 160427 | 1.8 | II | 441.46 | 33239 | 15750 | 36000 | 15750 | | | |
| | 2.9 | 220991 | 1.3 | I | 608.12 | 30872 | 15750 | 36000 | 15750 | | | |
| | 2.5 | 256706 | 1.1 | I | 706.4 | 29003 | 15750 | 36000 | 15750 | | | |
| | 2 | 307583 | 0.9 | * | 846.4 | 25547 | 15750 | 36000 | 15750 | | | |
| | 4.0 | 156626 | 2.8 | III | 431.00 | 49500 | 22500 | | | **SK 9096.1/62 - 132M/4** | 4236 | 553 |
| | 3.7 | 172332 | 2.6 | III | 474.22 | 49500 | 22500 | | | SK 9096.1/62 - 132MH/4 | | |
| | 3.2 | 195630 | 2.3 | III | 538.33 | 49500 | 22500 | | | | | |
| | 2.9 | 220813 | 2.0 | III | 607.63 | 49500 | 22500 | | | | | |
| | 2.5 | 255398 | 1.7 | II | 702.80 | 49500 | 22500 | | | | | |
| | 2.1 | 296742 | 1.5 | II | 816.57 | 49500 | 22500 | | | | | |
| | 1.8 | 355882 | 1.2 | I | 979.31 | 49500 | 22500 | | | | | |
| | 1.5 | 423442 | 1.0 | I | 1165.22 | 49500 | 22500 | | | | | |
| | 1.3 | 491994 | 0.9 | * | 1353.86 | 49500 | 22500 | | | | | |
| 15 | 200 | 4716 | 2.6 | III | 8.83 | 4437 | 6037 | 6062 | 2365 | **SK 9042.1 - 160M/4** | 392 | 516 |
| | 188 | 5017 | 2.6 | III | 9.39 | 4505 | 6125 | 6125 | 2387 | SK 9042.1 - 160MH/4 | | |
| | 173 | 5455 | 2.4 | III | 10.21 | 4592 | 6212 | 6210 | 2414 | | | |
| | 155 | 6091 | 2.2 | III | 11.4 | 4700 | 6343 | 6300 | 2450 | | | |
| | 132 | 7160 | 2.5 | III | 13.4 | 4860 | 6518 | 6300 | 2489 | | | |
| | 113 | 8367 | 2.1 | III | 15.66 | 5011 | 6678 | 6300 | 2513 | | | |
| | 97 | 9725 | 2.2 | III | 18.2 | 5245 | 6995 | 6300 | 2628 | | | |
| | 87 | 10857 | 2.1 | III | 20.32 | 5344 | 7085 | 6300 | 2642 | | | |
| | 74 | 12765 | 1.9 | II | 23.89 | 5497 | 7211 | 6300 | 2642 | | | |
| | 63 | 14913 | 1.7 | II | 27.91 | 5625 | 7317 | 6300 | 2617 | | | |
| | 51 | 18375 | 1.3 | I | 34.39 | 5582 | 7387 | 6300 | 2549 | | | |
| | 44 | 21661 | 1.1 | I | 40.54 | 5249 | 7376 | 6300 | 2450 | | | |
| | 37 | 25471 | 1.0 | I | 47.67 | 4761 | 7306 | 6300 | 2309 | | | |
| | 32 | 29756 | 0.8 | * | 55.69 | 4028 | 7155 | 6233 | 2124 | | | |
| | 219 | 4328 | 4.0 | III | 8.1 | 6822 | 8622 | 8550 | 3807 | **SK 9052.1 - 160M/4** | 558 | 524 |
| | 188 | 5023 | 3.9 | III | 9.4 | 7097 | 8960 | 8550 | 3956 | SK 9052.1 - 160MH/4 | | |
| | 178 | 5306 | 3.8 | III | 9.93 | 7196 | 9074 | 8550 | 4001 | | | |
| | 165 | 5723 | 3.7 | III | 10.71 | 7342 | 9252 | 8550 | 4079 | | | |
| | 149 | 6348 | 3.5 | III | 11.88 | 7538 | 9493 | 8550 | 4178 | | | |
| | 132 | 7187 | 3.3 | III | 13.45 | 7772 | 9785 | 8550 | 4293 | | | |
| | 108 | 8725 | 3.1 | III | 16.33 | 8152 | 10125 | 8550 | 4482 | | | |
| | 99 | 9586 | 3.7 | III | 17.94 | 8399 | 10125 | 8550 | 4628 | | | |
| | 89 | 10638 | 3.5 | III | 19.91 | 8550 | 10125 | 8550 | 4734 | | | |
| | 79 | 12038 | 3.2 | III | 22.53 | 8539 | 10125 | 8550 | 4858 | | | |
| | 76 | 12466 | 3.1 | III | 23.33 | 8525 | 10125 | 8550 | 4880 | | | |

(AGMA Class I = $f_B$ 1.0 - 1.39 II = $f_B$ 1.4 - 1.99 III = $f_B$ ≥ 2.0 * = $f_B$ < 1.0) **(Model Type in blue is an Energy Efficient motor)**


Send Quote Requests to info@automatedpt.com
Call +1(800)985-6929 To Order or Order Online At Nordgearmotors.com

# 15 hp Gearmotors



DRIVESYSTEMS



| Motor Power $P_n$ [hp] | Output Speed $n_2$ [rpm] | Output Torque $T_2$ [lb-in] | Service Factor $f_B$ | AGMA Class | Gear Ratio $i_{tot}$ | Standard Bearings $F_{RN}$ OHL [lb] | Standard Bearings $F_{AN}$ Thrust [lb] | Heavy Duty Bearings (VL) $F_{RVL}$ OHL [lb] | Heavy Duty Bearings (VL) $F_{AVL}$ Thrust [lb] | Model Type | Weight [lb] | Dim. Page |
|---|---|---|---|---|---|---|---|---|---|---|---|---|
| 15 | 65 | 14614 | 2.8 | III | 27.35 | 8453 | 10125 | 8550 | 5047 | **SK 9052.1 - 160M/4** | 558 | 524 |
| | 57 | 16714 | 2.5 | III | 31.28 | 8372 | 10125 | 8550 | 5155 | SK 9052.1 - 160MH/4 | | |
| | 49 | 19348 | 2.2 | III | 36.21 | 8253 | 10125 | 8550 | 5279 | | | |
| | 45 | 21223 | 2.0 | III | 39.72 | 8156 | 10125 | 8550 | 5364 | | | |
| | 39 | 24023 | 1.8 | II | 44.96 | 7992 | 10125 | 8550 | 5443 | | | |
| | 32 | 29153 | 1.5 | II | 54.56 | 7625 | 10125 | 8550 | 5549 | | | |
| | 28 | 33352 | 1.3 | I | 62.42 | 7256 | 10125 | 8550 | 5603 | | | |
| | 25 | 38599 | 1.1 | I | 72.24 | 6689 | 10125 | 8550 | 5648 | | | |
| | 20 | 47111 | 0.9 | * | 88.17 | 5429 | 10125 | 8550 | 5648 | | | |
| | 50 | 18803 | 3.3 | III | 35.19 | 12566 | 11250 | 14850 | 6759 | **SK 9072.1 - 160M/4** | 867 | 532 |
| | 43 | 21966 | 3.1 | III | 41.11 | 13001 | 11250 | 14850 | 6980 | SK 9072.1 - 160MH/4 | | |
| | 35 | 26903 | 2.7 | III | 50.35 | 13592 | 11250 | 14850 | 7241 | | | |
| | 30 | 31226 | 2.4 | III | 58.44 | 13997 | 11250 | 14850 | 7418 | | | |
| | 25 | 37520 | 2.0 | III | 70.22 | 14090 | 11250 | 14850 | 7623 | | | |
| | 22 | 42580 | 1.8 | II | 79.69 | 13876 | 11250 | 14850 | 7745 | | | |
| | 19 | 48874 | 1.5 | II | 91.47 | 13565 | 11250 | 14850 | 7859 | | | |
| | 16 | 58872 | 1.3 | I | 110.18 | 12962 | 11250 | 14850 | 7961 | | | |
| | 11 | 84033 | 0.9 | * | 157.27 | 10712 | 11250 | 14850 | 7859 | | | |
| | 9.5 | 99843 | 0.8 | * | 186.86 | 8467 | 11250 | 14850 | 7846 | | | |
| | 33 | 28469 | 4.0 | III | 53.28 | 20563 | 13500 | 21375 | 13500 | **SK 9082.1 - 160M/4** | 1440 | 536 |
| | 28 | 33336 | 3.5 | III | 62.39 | 21375 | 13500 | 21375 | 13500 | SK 9082.1 - 160MH/4 | | |
| | 25 | 38204 | 3.0 | III | 71.5 | 21375 | 13500 | 21375 | 13500 | | | |
| | 21 | 44285 | 2.6 | III | 82.88 | 21362 | 13500 | 21375 | 13500 | | | |
| | 18 | 51220 | 2.2 | III | 95.86 | 21218 | 13500 | 21375 | 13500 | | | |
| | 15 | 62222 | 1.8 | II | 116.45 | 20941 | 13500 | 21375 | 13500 | | | |
| | 14 | 65433 | 1.8 | II | 122.46 | 20851 | 13500 | 21375 | 13500 | | | |
| | 12 | 79486 | 1.4 | II | 148.76 | 20392 | 13500 | 21375 | 13500 | | | |
| | 7.2 | 130546 | 0.9 | * | 244.32 | 17777 | 13500 | 21375 | 13500 | | | |
| | 15 | 62249 | 2.8 | III | 116.5 | 26984 | 14625 | 27000 | 14625 | **SK 9086.1 - 160M/4** | 1991 | 540 |
| | 14 | 68217 | 2.6 | III | 127.67 | 26852 | 14625 | 27000 | 14625 | SK 9086.1 - 160MH/4 | | |
| | 12 | 81089 | 2.2 | III | 151.76 | 26516 | 14625 | 27000 | 14625 | | | |
| | 9.1 | 103680 | 1.7 | II | 194.04 | 25774 | 14625 | 27000 | 14625 | | | |
| | 7.7 | 123236 | 1.4 | II | 230.64 | 24959 | 14625 | 27000 | 14625 | | | |
| | 7.5 | 126063 | 1.4 | II | 235.93 | 24827 | 14625 | 27000 | 14625 | **SK 9086.1/52 - 160M/4** | 2159 | 552 |
| | 6.5 | 144518 | 1.2 | I | 270.47 | 23873 | 14625 | 27000 | 14625 | SK 9086.1/52 - 160MH/4 | | |
| | 4.7 | 202049 | 0.9 | * | 378.14 | 19607 | 14625 | 27000 | 14625 | | | |
| | 4.1 | 231549 | 0.8 | * | 433.35 | 16292 | 14625 | 27000 | 14625 | | | |
| | 15 | 64242 | 4.0 | III | 120.23 | 35307 | 15750 | 36000 | 15750 | **SK 9092.1 - 160M/4** | 3248 | 544 |
| | 12 | 81730 | 3.5 | III | 152.96 | 35071 | 15750 | 36000 | 15750 | SK 9092.1 - 160MH/4 | | |
| | 9 | 105534 | 2.7 | III | 197.51 | 34650 | 15750 | 36000 | 15750 | | | |
| | 7 | 135397 | 2.1 | III | 253.4 | 33962 | 15750 | 36000 | 15750 | | | |
| | 5.9 | 158966 | 1.8 | II | 297.51 | 33284 | 15750 | 36000 | 15750 | | | |

(AGMA Class I = $f_B$ 1.0 - 1.39 II = $f_B$ 1.4 - 1.99 III = $f_B$ ≥ 2.0 * = $f_B$ < 1.0) **(Model Type in blue is an Energy Efficient motor)**


Send Quote Requests to info@automatedpt.com
Call +1(800)985-6929 To Order or Order Online At Nordgearmotors.com

DRIVESYSTEMS





# 15 hp, 20 hp Gearmotors

| Motor Power $P_n$ [hp] | Output Speed $n_2$ [rpm] | Output Torque $T_2$ [lb-in] | Service Factor $f_B$ | AGMA Class | Gear Ratio $i_{tot}$ | Standard Bearings $F_{RN}$ OHL [lb] | Standard Bearings $F_{AN}$ Thrust [lb] | Heavy Duty Bearings (VL) $F_{RVL}$ OHL [lb] | Heavy Duty Bearings (VL) $F_{AVL}$ Thrust [lb] | Model Type | Weight [lb] | Dim. Page |
|---|---|---|---|---|---|---|---|---|---|---|---|---|
| **15** | 4.6 | 206072 | 1.4 | II | 385.67 | 31543 | 15750 | 36000 | 15750 | **SK 9092.1/52 - 160M/4** | 3416 | 552 |
| | 4.0 | 235882 | 1.2 | I | 441.46 | 30141 | 15750 | 36000 | 15750 | SK 9092.1/52 - 160MH/4 | | |
| | 2.9 | 324932 | 0.9 | * | 608.12 | 24095 | 15750 | 36000 | 15750 | | | |
| | 2.5 | 377445 | 0.8 | * | 706.4 | 18398 | 15750 | 36000 | 15750 | | | |
| | 6.6 | 144315 | 3.1 | III | 270.09 | 49500 | 22500 | | | **SK 9096.1/62 - 160M/4** | 4275 | 553 |
| | 6.0 | 158785 | 2.8 | III | 297.17 | 49500 | 22500 | | | SK 9096.1/62 - 160MH/4 | | |
| | 5.5 | 171368 | 2.6 | III | 320.72 | 49500 | 22500 | | | | | |
| | 4.8 | 198207 | 2.2 | III | 370.95 | 49500 | 22500 | | | | | |
| | 4.1 | 230293 | 1.9 | II | 431.00 | 49500 | 22500 | | | | | |
| | 3.7 | 253386 | 1.7 | II | 474.22 | 49500 | 22500 | | | | | |
| | 3.3 | 287642 | 1.5 | II | 538.33 | 49500 | 22500 | | | | | |
| | 2.9 | 324670 | 1.4 | II | 607.63 | 49500 | 22500 | | | | | |
| | 2.5 | 375522 | 1.2 | I | 702.80 | 49500 | 22500 | | | | | |
| | 2.2 | 436312 | 1.0 | I | 816.57 | 49500 | 22500 | | | | | |
| | 1.8 | 523267 | 0.8 | * | 979.31 | 49500 | 22500 | | | | | |
| **20** | 200 | 6306 | 2.0 | III | 8.83 | 4293 | 5762 | 5713 | 2196 | **SK 9042.1 - 160L/4** | 430 | 516 |
| | 188 | 6704 | 2.0 | III | 9.39 | 4347 | 5828 | 5744 | 2214 | SK 9042.1 - 160LH/4 | | |
| | 173 | 7290 | 1.8 | II | 10.21 | 4419 | 5893 | 5801 | 2221 | | | |
| | 155 | 8139 | 1.6 | II | 11.4 | 4505 | 5978 | 5861 | 2237 | | | |
| | 132 | 9567 | 1.9 | II | 13.4 | 4633 | 6095 | 5909 | 2237 | | | |
| | 113 | 11181 | 1.6 | II | 15.66 | 4741 | 6194 | 5931 | 2219 | | | |
| | 97 | 12994 | 1.7 | II | 18.2 | 4957 | 6458 | 6212 | 2315 | | | |
| | 87 | 14508 | 1.6 | II | 20.32 | 5029 | 6509 | 6194 | 2291 | | | |
| | 74 | 17057 | 1.4 | II | 23.89 | 5114 | 6530 | 6118 | 2237 | | | |
| | 63 | 19927 | 1.2 | I | 27.91 | 5171 | 6509 | 5981 | 2149 | | | |
| | 51 | 24553 | 1.0 | I | 34.39 | 4892 | 6395 | 5659 | 1960 | | | |
| | 44 | 28944 | 0.9 | * | 40.54 | 4185 | 6212 | 5297 | 1753 | | | |
| | 218 | 5783 | 3.0 | III | 8.1 | 6712 | 8444 | 8550 | 3722 | **SK 9052.1 - 160L/4** | 595 | 524 |
| | 188 | 6711 | 2.9 | III | 9.4 | 6964 | 8762 | 8550 | 3843 | SK 9052.1 - 160LH/4 | | |
| | 178 | 7090 | 2.8 | III | 9.93 | 7072 | 8874 | 8550 | 3893 | | | |
| | 165 | 7647 | 2.8 | III | 10.71 | 7200 | 9018 | 8550 | 3956 | | | |
| | 149 | 8482 | 2.6 | III | 11.88 | 7373 | 9236 | 8550 | 4046 | | | |
| | 131 | 9603 | 2.5 | III | 13.45 | 7578 | 9493 | 8550 | 4145 | | | |
| | 108 | 11659 | 2.3 | III | 16.33 | 7916 | 9880 | 8550 | 4300 | | | |
| | 98 | 12809 | 2.8 | III | 17.94 | 8181 | 10125 | 8550 | 4446 | | | |
| | 89 | 14215 | 2.6 | III | 19.91 | 8359 | 10125 | 8550 | 4527 | | | |
| | 78 | 16086 | 2.4 | III | 22.53 | 8397 | 10125 | 8550 | 4622 | | | |
| | 76 | 16657 | 2.3 | III | 23.33 | 8375 | 10125 | 8550 | 4637 | | | |
| | 65 | 19527 | 2.1 | III | 27.35 | 8244 | 10125 | 8550 | 4757 | | | |
| | 56 | 22333 | 1.9 | II | 31.28 | 8093 | 10125 | 8550 | 4849 | | | |
| | 49 | 25853 | 1.6 | II | 36.21 | 7871 | 10125 | 8550 | 4912 | | | |
| | 44 | 28359 | 1.5 | II | 39.72 | 7688 | 10125 | 8550 | 4952 | | | |
| | 39 | 32100 | 1.3 | I | 44.96 | 7373 | 10125 | 8550 | 4975 | | | |
| | 32 | 38954 | 1.1 | I | 54.56 | 6647 | 10125 | 8550 | 5000 | | | |
| | 28 | 44566 | 1.0 | I | 62.42 | 5864 | 10125 | 8550 | 4959 | | | |
| | 24 | 51577 | 0.8 | * | 72.24 | 4502 | 10125 | 8550 | 4896 | | | |

(AGMA Class I = $f_B$ 1.0 - 1.39 II = $f_B$ 1.4 - 1.99 III = $f_B$ ≥ 2.0 * = $f_B$ < 1.0) **(Model Type in blue is an Energy Efficient motor)**



Send Quote Requests to info@automatedpt.com
Call +1(800)985-6929 To Order or Order Online At Nordgearmotors.com

# 20 hp Gearmotors



DRIVESYSTEMS

| Motor Power $P_n$ [hp] | Output Speed $n_2$ [rpm] | Output Torque $T_2$ [lb-in] | Service Factor $f_B$ | AGMA Class | Gear Ratio $i_{tot}$ | Standard Bearings $F_{RN}$ OHL [lb] | Standard Bearings $F_{AN}$ Thrust [lb] | Heavy Duty Bearings (VL) $F_{RVL}$ OHL [lb] | Heavy Duty Bearings (VL) $F_{AVL}$ Thrust [lb] | Model Type | Weight [lb] | Dim. Page |
|---|---|---|---|---|---|---|---|---|---|---|---|---|
| 20 | 97 | 13059 | 3.1 | III | 18.29 | 10467 | 11250 | 14850 | 5675 | SK 9072.1 - 160L/4 | 904 | 532 |
| | 86 | 14715 | 3.0 | III | 20.61 | 10773 | 11250 | 14850 | 5823 | SK 9072.1 - 160LH/4 | | |
| | 70 | 18021 | 2.8 | III | 25.24 | 11297 | 11250 | 14850 | 6091 | | | |
| | 60 | 20912 | 2.7 | III | 29.29 | 11678 | 11250 | 14850 | 6257 | | | |
| | 50 | 25125 | 2.5 | III | 35.19 | 12150 | 11250 | 14850 | 6473 | | | |
| | 43 | 29351 | 2.3 | III | 41.11 | 12524 | 11250 | 14850 | 6620 | | | |
| | 35 | 35948 | 2.0 | III | 50.35 | 13019 | 11250 | 14850 | 6813 | | | |
| | 30 | 41724 | 1.8 | II | 58.44 | 13367 | 11250 | 14850 | 6923 | | | |
| | 25 | 50135 | 1.5 | II | 70.22 | 13496 | 11250 | 14850 | 7025 | | | |
| | 22 | 56896 | 1.3 | I | 79.69 | 13093 | 11250 | 14850 | 7058 | | | |
| | 19 | 65307 | 1.2 | I | 91.47 | 12499 | 11250 | 14850 | 7092 | | | |
| | 16 | 78665 | 1.0 | I | 110.18 | 11300 | 11250 | 14850 | 7013 | | | |
| | 42 | 29658 | 2.8 | III | 41.54 | 18936 | 13500 | 21375 | 13500 | SK 9082.1 - 160L/4 | 1477 | 536 |
| | 40 | 31864 | 3.4 | III | 44.63 | 19307 | 13500 | 21375 | 13500 | SK 9082.1 - 160LH/4 | | |
| | 33 | 38040 | 3.0 | III | 53.28 | 20106 | 13500 | 21375 | 13500 | | | |
| | 28 | 44545 | 2.6 | III | 62.39 | 20849 | 13500 | 21375 | 13500 | | | |
| | 25 | 51049 | 2.3 | III | 71.5 | 21220 | 13500 | 21375 | 13500 | | | |
| | 21 | 59174 | 1.9 | II | 82.88 | 21024 | 13500 | 21375 | 13500 | | | |
| | 18 | 68441 | 1.7 | II | 95.86 | 20761 | 13500 | 21375 | 13500 | | | |
| | 15 | 83142 | 1.4 | II | 116.45 | 20255 | 13500 | 21375 | 13500 | | | |
| | 14 | 87433 | 1.3 | I | 122.46 | 20086 | 13500 | 21375 | 13500 | | | |
| | 12 | 106210 | 1.1 | I | 148.76 | 19226 | 13500 | 21375 | 13500 | | | |
| | 26 | 48193 | 3.0 | III | 67.5 | 27000 | 14625 | 27000 | 14625 | SK 9086.1 - 160L/4 | 2029 | 540 |
| | 20 | 64614 | 2.7 | III | 90.5 | 26933 | 14625 | 27000 | 14625 | SK 9086.1 - 160LH/4 | | |
| | 15 | 83177 | 2.1 | III | 116.5 | 26456 | 14625 | 27000 | 14625 | | | |
| | 14 | 91152 | 1.9 | II | 127.67 | 26210 | 14625 | 27000 | 14625 | | | |
| | 12 | 108352 | 1.6 | II | 151.76 | 25594 | 14625 | 27000 | 14625 | | | |
| | 9.1 | 138539 | 1.3 | I | 194.04 | 24201 | 14625 | 27000 | 14625 | | | |
| | 7.7 | 164670 | 1.1 | I | 230.64 | 22626 | 14625 | 27000 | 14625 | | | |
| | 17 | 73025 | 3.1 | III | 102.28 | 35195 | 15750 | 36000 | 15750 | SK 9092.1 - 160L/4 | 3285 | 544 |
| | 15 | 85841 | 3.0 | III | 120.23 | 35006 | 15750 | 36000 | 15750 | SK 9092.1 - 160LH/4 | | |
| | 12 | 109209 | 2.6 | III | 152.96 | 34576 | 15750 | 36000 | 15750 | | | |
| | 8.9 | 141016 | 2.0 | III | 197.51 | 33811 | 15750 | 36000 | 15750 | | | |
| | 7 | 180920 | 1.6 | II | 253.4 | 32540 | 15750 | 36000 | 15750 | | | |
| | 5.9 | 212413 | 1.3 | I | 297.51 | 31266 | 15750 | 36000 | 15750 | | | |
| | 4.6 | 275357 | 1.0 | I | 385.67 | 27857 | 15750 | 36000 | 15750 | SK 9092.1/52 - 160L/4 | 3453 | 552 |
| | 4 | 315189 | 0.9 | * | 441.46 | 24930 | 15750 | 36000 | 15750 | SK 9092.1/52 - 160LH/4 | | |
| | 13 | 95336 | 3.2 | III | 133.53 | 49500 | 22500 | | | SK 9096.1 - 160L/4 | 4024 | 548 |
| | 11 | 110158 | 3.2 | III | 154.29 | 49500 | 22500 | | | SK 9096.1 - 160LH/4 | | |
| | 10 | 123809 | 3.0 | III | 173.41 | 49500 | 22500 | | | | | |
| | 8.8 | 143201 | 3.0 | III | 200.57 | 49500 | 22500 | | | | | |

(AGMA Class I = $f_B$ 1.0 - 1.39 II = $f_B$ 1.4 - 1.99 III = $f_B$ ≥ 2.0 * = $f_B$ < 1.0) **(Model Type in blue is an Energy Efficient motor)**


Send Quote Requests to info@automatedpt.com
Call +1(800)985-6929 To Order or Order Online At Nordgearmotors.com

DRIVESYSTEMS

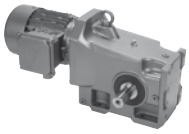



# 20 hp, 25 hp Gearmotors

| Motor Power $P_n$ [hp] | Output Speed $n_2$ [rpm] | Output Torque $T_2$ [lb-in] | Service Factor $f_B$ | AGMA Class | Gear Ratio $i_{tot}$ | Standard Bearings $F_{R\,N}$ OHL [lb] | Standard Bearings $F_{A\,N}$ Thrust [lb] | Heavy Duty Bearings (VL) $F_{R\,VL}$ OHL [lb] | Heavy Duty Bearings (VL) $F_{A\,VL}$ Thrust [lb] | Model Type | Weight [lb] | Dim. Page |
|---|---|---|---|---|---|---|---|---|---|---|---|---|
| **20** | 7.6 | 166719 | 2.7 | III | 233.51 | 49500 | 22500 | | | **SK 9096.1/62 - 160L/4** | 4313 | 553 |
| | 6.5 | 192836 | 2.3 | III | 270.09 | 49500 | 22500 | | | SK 9096.1/62 - 160LH/4 | | |
| | 5.9 | 212170 | 2.1 | III | 297.17 | 49500 | 22500 | | | | | |
| | 5.5 | 228984 | 1.9 | II | 320.72 | 49500 | 22500 | | | | | |
| | 4.8 | 264847 | 1.7 | II | 370.95 | 49500 | 22500 | | | | | |
| | 4.1 | 307721 | 1.4 | II | 431.00 | 49500 | 22500 | | | | | |
| | 3.7 | 338579 | 1.3 | I | 474.22 | 49500 | 22500 | | | | | |
| | 3.3 | 384351 | 1.2 | I | 538.33 | 49500 | 22500 | | | | | |
| | 2.9 | 433829 | 1.0 | I | 607.63 | 49500 | 22500 | | | | | |
| | 2.5 | 501778 | 0.9 | * | 702.80 | 49500 | 22500 | | | | | |
| | 2.2 | 583006 | 0.8 | * | 816.57 | 49500 | 22500 | | | | | |
| **25** | 216 | 7293 | 3.2 | III | 8.1 | 6608 | 8309 | 8550 | 3634 | **SK 9052.1 - 180MX/4** | 648 | 524 |
| | 186 | 8462 | 2.7 | III | 9.4 | 6838 | 8566 | 8550 | 3746 | SK 9052.1 - 180MH/4 | | |
| | 176 | 8939 | 2.8 | III | 9.93 | 6930 | 8663 | 8550 | 3789 | | | |
| | 163 | 9641 | 2.7 | III | 10.71 | 7040 | 8802 | 8550 | 3843 | | | |
| | 147 | 10695 | 3.2 | III | 11.88 | 7225 | 9018 | 8550 | 3917 | | | |
| | 130 | 12108 | 3.1 | III | 13.45 | 7414 | 9207 | 8550 | 4001 | | | |
| | 107 | 14701 | 2.6 | III | 16.33 | 7688 | 9538 | 8550 | 4124 | | | |
| | 98 | 16150 | 2.4 | III | 17.94 | 7936 | 9880 | 8550 | 4266 | | | |
| | 88 | 17924 | 2.1 | III | 19.91 | 8096 | 10040 | 8550 | 4334 | | | |
| | 78 | 20282 | 1.9 | II | 22.53 | 8206 | 10125 | 8550 | 4397 | | | |
| | 75 | 21002 | 1.8 | II | 23.33 | 8168 | 10125 | 8550 | 4397 | | | |
| | 64 | 24621 | 1.7 | II | 27.35 | 7954 | 10125 | 8550 | 4475 | | | |
| | 56 | 28159 | 1.5 | II | 31.28 | 7704 | 10125 | 8550 | 4518 | | | |
| | 48 | 32597 | 1.3 | I | 36.21 | 7328 | 10125 | 8550 | 4534 | | | |
| | 44 | 35757 | 1.2 | I | 39.72 | 7013 | 10125 | 8550 | 4534 | | | |
| | 39 | 40474 | 1.0 | I | 44.96 | 6453 | 10125 | 8550 | 4518 | | | |
| | 32 | 49117 | 0.9 | * | 54.56 | 5045 | 10125 | 8550 | 4426 | | | |
| | 28 | 56192 | 0.8 | * | 62.42 | 3139 | 10125 | 8550 | 4307 | | | |
| | 114 | 13864 | 4.4 | III | 15.4 | 9839 | 11250 | 14850 | 5315 | **SK 9072.1 - 180MX/4** | 957 | 532 |
| | 106 | 14800 | 4.5 | III | 16.44 | 10022 | 11250 | 14850 | 5409 | SK 9072.1 - 180MH/4 | | |
| | 96 | 16465 | 4.2 | III | 18.29 | 10298 | 11250 | 14850 | 5522 | | | |
| | 85 | 18554 | 4.1 | III | 20.61 | 10555 | 11250 | 14850 | 5666 | | | |
| | 78 | 20219 | 3.7 | III | 22.46 | 10771 | 11250 | 14850 | 5749 | | | |
| | 69 | 22722 | 3.3 | III | 25.24 | 11027 | 11250 | 14850 | 5870 | | | |
| | 60 | 26368 | 2.9 | III | 29.29 | 11369 | 11250 | 14850 | 6023 | | | |
| | 50 | 31679 | 2.4 | III | 35.19 | 11761 | 11250 | 14850 | 6170 | | | |
| | 43 | 37009 | 1.8 | II | 41.11 | 12078 | 11250 | 14850 | 6278 | | | |
| | 39 | 40339 | 1.7 | II | 44.81 | 12254 | 11250 | 14850 | 6338 | | | |
| | 35 | 45327 | 1.6 | II | 50.35 | 12445 | 11250 | 14850 | 6401 | | | |
| | 30 | 52610 | 1.4 | II | 58.44 | 12668 | 11250 | 14850 | 6422 | | | |
| | 25 | 63214 | 1.2 | I | 70.22 | 12656 | 11250 | 14850 | 6422 | | | |
| | 22 | 71740 | 1.0 | I | 79.69 | 11963 | 11250 | 14850 | 6370 | | | |
| | 19 | 82344 | 0.9 | * | 91.47 | 10906 | 11250 | 14850 | 6278 | | | |

(AGMA Class I = $f_B$ 1.0 - 1.39 II = $f_B$ 1.4 - 1.99 III = $f_B$ ≥ 2.0 * = $f_B$ < 1.0) **(Model Type in blue is an Energy Efficient motor)**


Send Quote Requests to info@automatedpt.com
Call +1(800)985-6929 To Order or Order Online At Nordgearmotors.com

# 25 hp Gearmotors



DRIVESYSTEMS

| Motor Power $P_n$ [hp] | Output Speed $n_2$ [rpm] | Output Torque $T_2$ [lb-in] | Service Factor $f_B$ | AGMA Class | Gear Ratio $i_{tot}$ | Standard Bearings $F_{RN}$ OHL [lb] | Standard Bearings $F_{AN}$ Thrust [lb] | Heavy Duty Bearings (VL) $F_{RVL}$ OHL [lb] | Heavy Duty Bearings (VL) $F_{AVL}$ Thrust [lb] | Model Type | Weight [lb] | Dim. Page |
|---|---|---|---|---|---|---|---|---|---|---|---|---|
| 25 | 49 | 32255 | 3.6 | III | 35.83 | 17989 | 13500 | 21375 | 13500 | SK 9082.1 - 180MX/4 | 1530 | 536 |
| | 42 | 37396 | 3.1 | III | 41.54 | 18596 | 13500 | 21375 | 13500 | SK 9082.1 - 180MH/4 | | |
| | 39 | 40177 | 2.9 | III | 44.63 | 18916 | 13500 | 21375 | 13500 | | | |
| | 33 | 47964 | 2.4 | III | 53.28 | 19679 | 13500 | 21375 | 13500 | | | |
| | 28 | 56165 | 2.0 | III | 62.39 | 20336 | 13500 | 21375 | 13500 | | | |
| | 24 | 64367 | 1.8 | II | 71.5 | 20880 | 13500 | 21375 | 13500 | | | |
| | 21 | 74611 | 1.5 | II | 82.88 | 20561 | 13500 | 21375 | 13500 | | | |
| | 18 | 86296 | 1.3 | I | 95.86 | 20131 | 13500 | 21375 | 13500 | | | |
| | 15 | 104832 | 1.1 | I | 116.45 | 19296 | 13500 | 21375 | 13500 | | | |
| | 26 | 60766 | 2.9 | III | 67.5 | 27000 | 14625 | 27000 | 14625 | SK 9086.1 - 180MX/4 | 2082 | 540 |
| | 19 | 81471 | 2.2 | III | 90.5 | 26505 | 14625 | 27000 | 14625 | SK 9086.1 - 180MH/4 | | |
| | 15 | 104877 | 1.7 | II | 116.5 | 25729 | 14625 | 27000 | 14625 | | | |
| | 14 | 114933 | 1.5 | II | 127.67 | 25326 | 14625 | 27000 | 14625 | | | |
| | 12 | 136619 | 1.3 | I | 151.76 | 24302 | 14625 | 27000 | 14625 | | | |
| | 12 | 130174 | 1.2 | I | 144.6 | 24629 | 14625 | 27000 | 14625 | SK 9086.1/52 - 180MX/4 | 2249 | 552 |
| | 10 | 154741 | 1.1 | I | 171.89 | 23270 | 14625 | 27000 | 14625 | SK 9086.1/52 - 180MH/4 | | |
| | 7.4 | 212392 | 0.8 | * | 235.93 | 18563 | 14625 | 27000 | 14625 | | | |
| | 19 | 82461 | 3.4 | III | 91.6 | 35060 | 15750 | 36000 | 15750 | SK 9092.1 - 180MX/4 | 3338 | 544 |
| | 17 | 92076 | 3.1 | III | 102.28 | 34902 | 15750 | 36000 | 15750 | SK 9092.1 - 180MH/4 | | |
| | 15 | 108235 | 2.6 | III | 120.23 | 34596 | 15750 | 36000 | 15750 | | | |
| | 11 | 137700 | 2.1 | III | 152.96 | 33901 | 15750 | 36000 | 15750 | | | |
| | 8.9 | 177805 | 1.6 | II | 197.51 | 32652 | 15750 | 36000 | 15750 | | | |
| | 9.1 | 172196 | 1.6 | II | 191.28 | 32850 | 15750 | 36000 | 15750 | SK 9092.1/52 - 180MX/4 | 3506 | 552 |
| | 7.9 | 199978 | 1.4 | II | 222.14 | 31799 | 15750 | 36000 | 15750 | SK 9092.1/52 - 180MH/4 | | |
| | 6.2 | 252749 | 1.1 | I | 280.76 | 29230 | 15750 | 36000 | 15750 | | | |
| | 4.5 | 347193 | 0.8 | * | 385.67 | 21965 | 15750 | 36000 | 15750 | | | |
| | 11 | 138897 | 3.2 | III | 154.29 | 49500 | 22500 | | | SK 9096.1 - 180MX/4 | 4077 | 548 |
| | 10 | 156109 | 2.8 | III | 173.41 | 49500 | 22500 | | | SK 9096.1 - 180MH/4 | | |
| | 8.7 | 180560 | 2.5 | III | 200.57 | 49500 | 22500 | | | | | |
| | 8.4 | 188103 | 2.4 | III | 208.95 | 49500 | 22500 | | | SK 9096.1/62 - 180MX/4 | 4366 | 553 |
| | 7.5 | 210213 | 2.1 | III | 233.51 | 49500 | 22500 | | | SK 9096.1/62 - 180MH/4 | | |
| | 6.5 | 243144 | 1.8 | II | 270.09 | 49500 | 22500 | | | | | |
| | 5.9 | 267522 | 1.7 | II | 297.17 | 49500 | 22500 | | | | | |
| | 5.5 | 288722 | 1.5 | II | 320.72 | 49500 | 22500 | | | | | |
| | 4.7 | 333941 | 1.3 | I | 370.95 | 49500 | 22500 | | | | | |
| | 4.1 | 388000 | 1.1 | I | 431.00 | 49500 | 22500 | | | | | |
| | 3.7 | 426908 | 1.0 | I | 474.22 | 49500 | 22500 | | | | | |
| | 3.3 | 484622 | 0.9 | * | 538.33 | 49500 | 22500 | | | | | |
| | 2.9 | 547008 | 0.8 | * | 607.63 | 49500 | 22500 | | | | | |

(AGMA Class I = $f_B$ 1.0 - 1.39 II = $f_B$ 1.4 - 1.99 III = $f_B$ ≥ 2.0 * = $f_B$ < 1.0) **(Model Type in blue is an Energy Efficient motor)**


Send Quote Requests to info@automatedpt.com
Call +1(800)985-6929 To Order or Order Online At Nordgearmotors.com

DRIVESYSTEMS

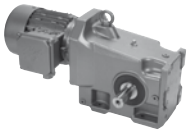



# 30 hp Gearmotors

| Motor Power $P_n$ [hp] | Output Speed $n_2$ [rpm] | Output Torque $T_2$ [lb-in] | Service Factor $f_B$ | AGMA Class | Gear Ratio $i_{tot}$ | Standard Bearings $F_{R\,N}$ OHL [lb] | Standard Bearings $F_{A\,N}$ Thrust [lb] | Heavy Duty Bearings (VL) $F_{R\,VL}$ OHL [lb] | Heavy Duty Bearings (VL) $F_{A\,VL}$ Thrust [lb] | Model Type | Weight [lb] | Dim. Page |
|---|---|---|---|---|---|---|---|---|---|---|---|---|
| **30** | 217 | 8726 | 2.6 | III | 8.1 | 6491 | 8111 | 8550 | 3542 | **SK 9052.1 - 180LX/4** | 648 | 524 |
| | 187 | 10127 | 2.3 | III | 9.4 | 6701 | 8350 | 8550 | 3634 | SK 9052.1 - 180LH/4 | | |
| | 177 | 10698 | 2.3 | III | 9.93 | 6775 | 8444 | 8550 | 3668 | | | |
| | 164 | 11538 | 2.2 | III | 10.71 | 6876 | 8566 | 8550 | 3722 | | | |
| | 148 | 12798 | 2.7 | III | 11.88 | 7025 | 8748 | 8550 | 3776 | | | |
| | 130 | 14490 | 2.6 | III | 13.45 | 7193 | 8930 | 8550 | 3843 | | | |
| | 107 | 17592 | 2.2 | III | 16.33 | 7436 | 9178 | 8550 | 3931 | | | |
| | 98 | 19327 | 2.0 | III | 17.94 | 7691 | 9506 | 8550 | 4079 | | | |
| | 88 | 21449 | 1.8 | II | 19.91 | 7823 | 9646 | 8550 | 4124 | | | |
| | 78 | 24272 | 1.6 | II | 22.53 | 7976 | 9785 | 8550 | 4165 | | | |
| | 75 | 25133 | 1.5 | II | 23.33 | 7920 | 9785 | 8550 | 4145 | | | |
| | 64 | 29464 | 1.4 | II | 27.35 | 7601 | 9977 | 8550 | 4205 | | | |
| | 56 | 33698 | 1.3 | I | 31.28 | 7223 | 10024 | 8550 | 4205 | | | |
| | 48 | 39009 | 1.1 | I | 36.21 | 6640 | 10089 | 8550 | 4165 | | | |
| | 44 | 42790 | 1.0 | I | 39.72 | 6134 | 10040 | 8550 | 4124 | | | |
| | 39 | 48435 | 0.9 | * | 44.96 | 5180 | 9977 | 8550 | 4046 | | | |
| | 192 | 9868 | 3.8 | III | 9.16 | 8492 | 11250 | 13214 | 4599 | **SK 9072.1 - 180LX/4** | 957 | 532 |
| | 172 | 10978 | 3.7 | III | 10.19 | 8719 | 11250 | 13574 | 4721 | SK 9072.1 - 180LH/4 | | |
| | 153 | 12367 | 3.6 | III | 11.48 | 8964 | 11250 | 13896 | 4826 | | | |
| | 146 | 12992 | 3.4 | III | 12.06 | 9061 | 11250 | 14049 | 4874 | | | |
| | 140 | 13477 | 3.3 | III | 12.51 | 9144 | 11250 | 14159 | 4921 | | | |
| | 125 | 15147 | 3.0 | III | 14.06 | 9380 | 11250 | 14490 | 5024 | | | |
| | 114 | 16590 | 3.7 | III | 15.4 | 9655 | 11250 | 14850 | 5171 | | | |
| | 107 | 17711 | 3.7 | III | 16.44 | 9830 | 11250 | 14850 | 5263 | | | |
| | 96 | 19704 | 3.5 | III | 18.29 | 10060 | 11250 | 14850 | 5364 | | | |
| | 85 | 22203 | 3.4 | III | 20.61 | 10316 | 11250 | 14850 | 5479 | | | |
| | 78 | 24196 | 3.1 | III | 22.46 | 10501 | 11250 | 14850 | 5558 | | | |
| | 70 | 27191 | 2.8 | III | 25.24 | 10730 | 11250 | 14850 | 5648 | | | |
| | 60 | 31554 | 2.4 | III | 29.29 | 11016 | 11250 | 14850 | 5749 | | | |
| | 50 | 37910 | 2.0 | III | 35.19 | 11336 | 11250 | 14850 | 5859 | | | |
| | 43 | 44288 | 1.5 | II | 41.11 | 11583 | 11250 | 14850 | 5918 | | | |
| | 39 | 48274 | 1.4 | II | 44.81 | 11693 | 11250 | 14850 | 5936 | | | |
| | 35 | 54242 | 1.3 | I | 50.35 | 11831 | 11250 | 14850 | 5945 | | | |
| | 30 | 62957 | 1.2 | I | 58.44 | 11963 | 11250 | 14850 | 5918 | | | |
| | 25 | 75648 | 1.0 | I | 70.22 | 11601 | 11250 | 14850 | 5803 | | | |
| | 22 | 85850 | 0.9 | * | 79.69 | 10496 | 11250 | 14850 | 5684 | | | |
| | 19 | 98540 | 0.8 | * | 91.47 | 8690 | 11250 | 14850 | 5497 | | | |
| | 56 | 33687 | 3.4 | III | 31.27 | 17100 | 13500 | 21375 | 13500 | **SK 9082.1 - 180LX/4** | 1530 | 536 |
| | 49 | 38600 | 3.0 | III | 35.83 | 17649 | 13500 | 21375 | 13500 | SK 9082.1 - 180LH/4 | | |
| | 42 | 44751 | 2.6 | III | 41.54 | 18218 | 13500 | 21375 | 13500 | | | |
| | 39 | 48080 | 2.4 | III | 44.63 | 18484 | 13500 | 21375 | 13500 | | | |
| | 33 | 57398 | 2.0 | III | 53.28 | 19166 | 13500 | 21375 | 13500 | | | |
| | 28 | 67213 | 1.7 | II | 62.39 | 19789 | 13500 | 21375 | 13500 | | | |
| | 25 | 77027 | 1.5 | II | 71.5 | 20216 | 13500 | 21375 | 13500 | | | |
| | 21 | 89286 | 1.3 | I | 82.88 | 20009 | 13500 | 21375 | 13500 | | | |
| | 18 | 103270 | 1.1 | I | 95.86 | 19375 | 13500 | 21375 | 13500 | | | |
| | 15 | 125451 | 0.9 | * | 116.45 | 18115 | 13500 | 21375 | 13500 | | | |

(AGMA Class I = $f_B$ 1.0 - 1.39 II = $f_B$ 1.4 - 1.99 III = $f_B$ ≥ 2.0 * = $f_B$ < 1.0) **(Model Type in blue is an Energy Efficient motor)**


Send Quote Requests to info@automatedpt.com
Call +1(800)985-6929 To Order or Order Online At Nordgearmotors.com

# 30 hp, 40 hp Gearmotors



DRIVESYSTEMS



| Motor Power $P_n$ [hp] | Output Speed $n_2$ [rpm] | Output Torque $T_2$ [lb-in] | Service Factor $f_B$ | AGMA Class | Gear Ratio $i_{tot}$ | Standard Bearings $F_{RN}$ OHL [lb] | Standard Bearings $F_{AN}$ Thrust [lb] | Heavy Duty Bearings (VL) $F_{RVL}$ OHL [lb] | Heavy Duty Bearings (VL) $F_{AVL}$ Thrust [lb] | Model Type | Weight [lb] | Dim. Page |
|---|---|---|---|---|---|---|---|---|---|---|---|---|
| 30 | 35 | 54188 | 3.3 | III | 50.3 | 25056 | 14625 | 27000 | 14625 | **SK 9086.1 - 180LX/4** | 2082 | 540 |
| | 30 | 63453 | 2.8 | III | 58.9 | 25940 | 14625 | 27000 | 14625 | SK 9086.1 - 180LH/4 | | |
| | 26 | 72718 | 2.4 | III | 67.5 | 26741 | 14625 | 27000 | 14625 | | | |
| | 19 | 97495 | 1.8 | II | 90.5 | 25997 | 14625 | 27000 | 14625 | | | |
| | 15 | 125505 | 1.4 | II | 116.5 | 24854 | 14625 | 27000 | 14625 | | | |
| | 14 | 137539 | 1.3 | I | 127.67 | 24255 | 14625 | 27000 | 14625 | | | |
| | 12 | 163491 | 1.1 | I | 151.76 | 22707 | 14625 | 27000 | 14625 | | | |
| | 22 | 86184 | 3.3 | III | 80 | 34999 | 15750 | 36000 | 15750 | **SK 9092.1 - 180LX/4** | 3338 | 544 |
| | 19 | 98680 | 2.9 | III | 91.6 | 34783 | 15750 | 36000 | 15750 | SK 9092.1 - 180LH/4 | | |
| | 17 | 110186 | 2.6 | III | 102.28 | 34556 | 15750 | 36000 | 15750 | | | |
| | 15 | 129523 | 2.2 | III | 120.23 | 34112 | 15750 | 36000 | 15750 | | | |
| | 11 | 164783 | 1.7 | II | 152.96 | 33098 | 15750 | 36000 | 15750 | | | |
| | 8.9 | 212777 | 1.3 | I | 197.51 | 31250 | 15750 | 36000 | 15750 | | | |
| | 9.2 | 206065 | 1.4 | II | 191.28 | 31543 | 15750 | 36000 | 15750 | **SK 9092.1/52 - 180LX/4** | 3506 | 552 |
| | 7.9 | 239311 | 1.2 | I | 222.14 | 29963 | 15750 | 36000 | 15750 | SK 9092.1/52 - 180LH/4 | | |
| | 6.3 | 302462 | 0.9 | * | 280.76 | 25945 | 15750 | 36000 | 15750 | | | |
| | 13 | 143851 | 3.1 | III | 133.53 | 49500 | 22500 | | | **SK 9096.1 - 180LX/4** | 4077 | 548 |
| | 11 | 166216 | 2.7 | III | 154.29 | 49500 | 22500 | | | SK 9096.1 - 180LH/4 | | |
| | 10 | 186814 | 2.4 | III | 173.41 | 49500 | 22500 | | | | | |
| | 8.8 | 216074 | 2.0 | III | 200.57 | 49500 | 22500 | | | | | |
| | 8.4 | 225101 | 2.0 | III | 208.95 | 49500 | 22500 | | | **SK 9096.1/62 - 180LX/4** | 4366 | 553 |
| | 7.5 | 251560 | 1.8 | II | 233.51 | 49500 | 22500 | | | SK 9096.1/62 - 180LH/4 | | |
| | 6.5 | 290967 | 1.5 | II | 270.09 | 49500 | 22500 | | | | | |
| | 5.9 | 320140 | 1.4 | II | 297.17 | 49500 | 22500 | | | | | |
| | 5.5 | 345511 | 1.3 | I | 320.72 | 49500 | 22500 | | | | | |
| | 4.7 | 399623 | 1.1 | I | 370.95 | 49500 | 22500 | | | | | |
| | 4.1 | 464315 | 1.0 | I | 431.00 | 49500 | 22500 | | | | | |
| | 3.7 | 510876 | 0.9 | * | 474.22 | 49500 | 22500 | | | | | |
| | 3.3 | 579941 | 0.8 | * | 538.33 | 49500 | 22500 | | | | | |
| 40 | 194 | 12974 | 3.2 | III | 9.16 | 8255 | 11241 | 12762 | 4412 | **SK 9072.1 - 200L/4** | 1114 | 532 |
| | 175 | 14433 | 2.9 | III | 10.19 | 8433 | 11250 | 13021 | 4505 | SK 9072.1 - 200LH/4 | | |
| | 155 | 16260 | 2.7 | III | 11.48 | 8663 | 11250 | 13282 | 4599 | | | |
| | 148 | 17082 | 2.6 | III | 12.06 | 8737 | 11250 | 13403 | 4637 | | | |
| | 142 | 17719 | 2.5 | III | 12.51 | 8800 | 11250 | 13529 | 4673 | | | |
| | 127 | 19914 | 2.3 | III | 14.06 | 9005 | 11250 | 13795 | 4743 | | | |
| | 116 | 21812 | 3.0 | III | 15.4 | 9272 | 11250 | 14200 | 4889 | | | |
| | 108 | 23285 | 2.9 | III | 16.44 | 9430 | 11250 | 14414 | 4968 | | | |
| | 97 | 25906 | 2.7 | III | 18.29 | 9614 | 11250 | 14636 | 5040 | | | |
| | 86 | 29192 | 2.6 | III | 20.61 | 9803 | 11250 | 14850 | 5121 | | | |
| | 79 | 31812 | 2.4 | III | 22.46 | 9952 | 11250 | 14850 | 5155 | | | |
| | 71 | 35749 | 2.1 | III | 25.24 | 10127 | 11250 | 14850 | 5204 | | | |
| | 61 | 41486 | 1.8 | II | 29.29 | 10301 | 11250 | 14850 | 5238 | | | |
| | 51 | 49842 | 1.5 | II | 35.19 | 10490 | 11250 | 14850 | 5247 | | | |
| | 43 | 58227 | 1.2 | I | 41.11 | 10593 | 11250 | 14850 | 5229 | | | |

(AGMA Class I = $f_B$ 1.0 - 1.39 II = $f_B$ 1.4 - 1.99 III = $f_B$ ≥ 2.0 * = $f_B$ < 1.0) **(Model Type in blue is an Energy Efficient motor)**


Send Quote Requests to info@automatedpt.com
Call +1(800)985-6929 To Order or Order Online At Nordgearmotors.com

DRIVESYSTEMS

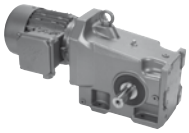



# 40 hp, 50 hp Gearmotors

| Motor Power $P_n$ [hp] | Output Speed $n_2$ [rpm] | Output Torque $T_2$ [lb-in] | Service Factor $f_B$ | AGMA Class | Gear Ratio $i_{tot}$ | Standard Bearings $F_{R\,N}$ OHL [lb] | Standard Bearings $F_{A\,N}$ Thrust [lb] | Heavy Duty Bearings (VL) $F_{R\,VL}$ OHL [lb] | Heavy Duty Bearings (VL) $F_{A\,VL}$ Thrust [lb] | Model Type | Weight [lb] | Dim. Page |
|---|---|---|---|---|---|---|---|---|---|---|---|---|
| **40** | 40 | 63468 | 1.1 | I | 44.81 | 10645 | 11250 | 14850 | 5171 | **SK 9072.1 - 200L/4** | 1114 | 532 |
| | 35 | 71315 | 1.0 | I | 50.35 | 10625 | 11250 | 14850 | 5081 | SK 9072.1 - 200LH/4 | | |
| | 30 | 82773 | 0.9 | * | 58.44 | 10548 | 11250 | 14850 | 4921 | | | |
| | 25 | 99458 | 0.8 | * | 70.22 | 8532 | 11250 | 14191 | 4631 | | | |
| | 67 | 37832 | 3.0 | III | 26.71 | 15937 | 13500 | 21375 | 13174 | **SK 9082.1 - 200L/4** | 1687 | 536 |
| | 57 | 44290 | 2.6 | III | 31.27 | 16475 | 13500 | 21375 | 13500 | SK 9082.1 - 200LH/4 | | |
| | 50 | 50749 | 2.3 | III | 35.83 | 16931 | 13500 | 21375 | 13500 | | | |
| | 43 | 58836 | 2.0 | III | 41.54 | 17406 | 13500 | 21375 | 13500 | | | |
| | 40 | 63213 | 1.8 | II | 44.63 | 17645 | 13500 | 21375 | 13500 | | | |
| | 33 | 75465 | 1.5 | II | 53.28 | 18178 | 13500 | 21375 | 13500 | | | |
| | 29 | 88368 | 1.3 | I | 62.39 | 18533 | 13500 | 21375 | 13500 | | | |
| | 25 | 101271 | 1.1 | I | 71.5 | 18887 | 13500 | 21375 | 13500 | | | |
| | 21 | 117390 | 1.0 | I | 82.88 | 18610 | 13500 | 21375 | 13500 | | | |
| | 19 | 135774 | 0.8 | * | 95.86 | 17408 | 13500 | 21375 | 13500 | | | |
| | 42 | 59672 | 3.0 | III | 42.13 | 23220 | 14625 | 27000 | 14625 | **SK 9086.1 - 200L/4** | 2238 | 540 |
| | 35 | 71244 | 2.5 | III | 50.3 | 24086 | 14625 | 27000 | 14625 | SK 9086.1 - 200LH/4 | | |
| | 30 | 83425 | 2.1 | III | 58.9 | 24885 | 14625 | 27000 | 14625 | | | |
| | 26 | 95606 | 1.9 | II | 67.5 | 25481 | 14625 | 27000 | 14625 | | | |
| | 20 | 128182 | 1.4 | II | 90.5 | 24725 | 14625 | 27000 | 14625 | | | |
| | 30 | 83085 | 3.4 | III | 58.66 | 35048 | 15750 | 36000 | 15750 | **SK 9092.1 - 200L/4** | 3495 | 544 |
| | 26 | 97546 | 2.9 | III | 68.87 | 34803 | 15750 | 36000 | 15750 | SK 9092.1 - 200LH/4 | | |
| | 22 | 113310 | 2.5 | III | 80 | 34488 | 15750 | 36000 | 15750 | | | |
| | 19 | 129740 | 2.2 | III | 91.6 | 34106 | 15750 | 36000 | 15750 | | | |
| | 17 | 144867 | 2.0 | III | 102.28 | 33705 | 15750 | 36000 | 15750 | | | |
| | 15 | 170291 | 1.7 | II | 120.23 | 32915 | 15750 | 36000 | 15750 | | | |
| | 17 | 144726 | 3.1 | III | 102.18 | 49500 | 22500 | | | **SK 9096.1 - 200L/4** | 4234 | 548 |
| | 15 | 167388 | 2.6 | III | 118.18 | 49500 | 22500 | | | SK 9096.1 - 200LH/4 | | |
| | 13 | 189129 | 2.3 | III | 133.53 | 49500 | 22500 | | | | | |
| | 12 | 218533 | 2.0 | III | 154.29 | 49500 | 22500 | | | | | |
| | 10 | 245615 | 1.8 | II | 173.41 | 49500 | 22500 | | | | | |
| | 8.9 | 284083 | 1.6 | II | 200.57 | 49500 | 22500 | | | | | |
| | 8.5 | 295953 | 1.5 | II | 208.95 | 49500 | 22500 | | | **SK 9096.1/62 - 200L/4** | 4522 | 553 |
| | 7.6 | 330739 | 1.3 | I | 233.51 | 49500 | 22500 | | | SK 9096.1/62 - 200LH/4 | | |
| | 6.6 | 382550 | 1.2 | I | 270.09 | 49500 | 22500 | | | | | |
| | 6.0 | 420906 | 1.1 | I | 297.17 | 49500 | 22500 | | | | | |
| | 5.6 | 454262 | 1.0 | I | 320.72 | 49500 | 22500 | | | | | |
| | 4.8 | 525406 | 0.8 | * | 370.95 | 49500 | 22500 | | | | | |
| **50** | 193 | 16356 | 2.5 | III | 9.16 | 8019 | 10922 | 12296 | 4246 | **SK 9072.1 - 225S/4** | 1186 | 532 |
| | 173 | 18196 | 2.3 | III | 10.19 | 8183 | 11133 | 12521 | 4313 | SK 9072.1 - 225SH/4 | | |
| | 154 | 20499 | 2.2 | III | 11.48 | 8370 | 11250 | 12746 | 4383 | | | |
| | 146 | 21535 | 2.1 | III | 12.06 | 8438 | 11250 | 12839 | 4412 | | | |
| | 141 | 22338 | 2.0 | III | 12.51 | 8510 | 11250 | 12893 | 4442 | | | |
| | 126 | 25106 | 1.8 | II | 14.06 | 8649 | 11250 | 13073 | 4491 | | | |

(AGMA Class I = $f_B$ 1.0 - 1.39 II = $f_B$ 1.4 - 1.99 III = $f_B$ ≥ 2.0 * = $f_B$ < 1.0) **(Model Type in blue is an Energy Efficient motor)**



Send Quote Requests to info@automatedpt.com
Call +1(800)985-6929 To Order or Order Online At Nordgearmotors.com

# 50 hp Gearmotors



DRIVESYSTEMS

| Motor Power $P_n$ [hp] | Output Speed $n_2$ [rpm] | Output Torque $T_2$ [lb-in] | Service Factor $f_B$ | AGMA Class | Gear Ratio $i_{tot}$ | Standard Bearings $F_{RN}$ OHL [lb] | Standard Bearings $F_{AN}$ Thrust [lb] | Heavy Duty Bearings (VL) $F_{RVL}$ OHL [lb] | Heavy Duty Bearings (VL) $F_{AVL}$ Thrust [lb] | Model Type | Weight [lb] | Dim. Page |
|---|---|---|---|---|---|---|---|---|---|---|---|---|
| 50 | 115 | 27499 | 2.4 | III | 15.4 | 8919 | 11250 | 13489 | 4631 | **SK 9072.1 - 225S/4** | 1186 | 532 |
| | 107 | 29356 | 2.3 | III | 16.44 | 9059 | 11250 | 13705 | 4689 | SK 9072.1 - 225SH/4 | | |
| | 97 | 32659 | 2.1 | III | 18.29 | 9196 | 11250 | 13853 | 4727 | | | |
| | 86 | 36802 | 2.0 | III | 20.61 | 9335 | 11250 | 13984 | 4772 | | | |
| | 79 | 40106 | 1.9 | II | 22.46 | 9428 | 11250 | 14054 | 4772 | | | |
| | 70 | 45070 | 1.7 | II | 25.24 | 9547 | 11250 | 14103 | 4772 | | | |
| | 60 | 52301 | 1.4 | II | 29.29 | 9612 | 11250 | 14076 | 4734 | | | |
| | 50 | 62837 | 1.2 | I | 35.19 | 9657 | 11250 | 13928 | 4637 | | | |
| | 43 | 73408 | 0.9 | * | 41.11 | 9590 | 11250 | 13615 | 4498 | | | |
| | 39 | 80015 | 0.9 | * | 44.81 | 9520 | 11250 | 13365 | 4399 | | | |
| | 35 | 89907 | 0.8 | * | 50.35 | 9392 | 11250 | 12949 | 4226 | | | |
| | 220 | 14357 | 3.2 | III | 8.04 | 11671 | 13500 | 21375 | 9637 | **SK 9082.1 - 225S/4** | 1760 | 536 |
| | 143 | 21981 | 2.9 | III | 12.31 | 12938 | 13500 | 21375 | 10712 | SK 9082.1 - 225SH/4 | | |
| | 121 | 26088 | 3.2 | III | 14.61 | 13615 | 13500 | 21375 | 11277 | | | |
| | 102 | 30981 | 3.1 | III | 17.35 | 14155 | 13500 | 21375 | 11700 | | | |
| | 79 | 39945 | 2.9 | III | 22.37 | 14947 | 13500 | 21375 | 12357 | | | |
| | 66 | 47694 | 2.4 | III | 26.71 | 15500 | 13500 | 21375 | 12800 | | | |
| | 56 | 55837 | 2.1 | III | 31.27 | 15944 | 13500 | 21375 | 13174 | | | |
| | 49 | 63980 | 1.8 | II | 35.83 | 16319 | 13500 | 21375 | 13496 | | | |
| | 42 | 74176 | 1.6 | II | 41.54 | 16677 | 13500 | 21375 | 13500 | | | |
| | 40 | 79693 | 1.4 | II | 44.63 | 16844 | 13500 | 21375 | 13500 | | | |
| | 33 | 95139 | 1.2 | I | 53.28 | 17186 | 13500 | 21375 | 13500 | | | |
| | 28 | 111406 | 1.0 | I | 62.39 | 17404 | 13500 | 21375 | 13500 | | | |
| | 25 | 127673 | 0.9 | * | 71.5 | 17514 | 13500 | 21375 | 13500 | | | |
| | 21 | 147994 | 0.8 | * | 82.88 | 16457 | 13500 | 21375 | 13500 | | | |
| | 220 | 14357 | 3.2 | III | 8.04 | 15134 | 14625 | 27000 | 11243 | **SK 9086.1 - 225S/4** | 2311 | 540 |
| | 185 | 17053 | 3.1 | III | 9.55 | 15847 | 14625 | 27000 | 11759 | SK 9086.1 - 225SH/4 | | |
| | 152 | 20713 | 3.2 | III | 11.6 | 16720 | 14625 | 27000 | 12418 | | | |
| | 143 | 21981 | 2.9 | III | 12.31 | 16931 | 14625 | 27000 | 12557 | | | |
| | 120 | 26249 | 2.7 | III | 14.7 | 17656 | 14625 | 27000 | 13113 | | | |
| | 108 | 29249 | 3.1 | III | 16.38 | 18331 | 14625 | 27000 | 13561 | | | |
| | 99 | 31731 | 2.9 | III | 17.77 | 18610 | 14625 | 27000 | 13804 | | | |
| | 84 | 37713 | 2.9 | III | 21.12 | 19445 | 14625 | 27000 | 14414 | | | |
| | 70 | 45016 | 2.7 | III | 25.21 | 20261 | 14625 | 27000 | 14625 | | | |
| | 60 | 52712 | 2.5 | III | 29.52 | 20990 | 14625 | 27000 | 14625 | | | |
| | 50 | 63283 | 2.5 | III | 35.44 | 21715 | 14625 | 27000 | 14625 | | | |
| | 42 | 75229 | 2.4 | III | 42.13 | 22543 | 14625 | 27000 | 14625 | | | |
| | 35 | 89818 | 2.0 | III | 50.3 | 23279 | 14625 | 27000 | 14625 | | | |
| | 30 | 105174 | 1.7 | II | 58.9 | 23848 | 14625 | 27000 | 14625 | | | |
| | 26 | 120531 | 1.5 | II | 67.5 | 24329 | 14625 | 27000 | 14625 | | | |
| | 20 | 161601 | 1.1 | I | 90.5 | 22831 | 14625 | 27000 | 14625 | | | |
| | 35 | 88836 | 3.0 | III | 49.75 | 34956 | 15750 | 36000 | 15750 | **SK 9092.1 - 225S/4** | 3568 | 544 |
| | 30 | 104746 | 2.7 | III | 58.66 | 34666 | 15750 | 36000 | 15750 | SK 9092.1 - 225SH/4 | | |
| | 26 | 122977 | 2.3 | III | 68.87 | 34270 | 15750 | 36000 | 15750 | | | |
| | 22 | 142851 | 2.0 | III | 80 | 33761 | 15750 | 36000 | 15750 | | | |

(AGMA Class I = $f_B$ 1.0 - 1.39 II = $f_B$ 1.4 - 1.99 III = $f_B$ ≥ 2.0 * = $f_B$ < 1.0) **(Model Type in blue is an Energy Efficient motor)**


Send Quote Requests to info@automatedpt.com
Call +1(800)985-6929 To Order or Order Online At Nordgearmotors.com

DRIVESYSTEMS

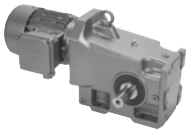



# 50 hp, 60 hp Gearmotors

| Motor Power $P_n$ [hp] | Output Speed $n_2$ [rpm] | Output Torque $T_2$ [lb-in] | Service Factor $f_B$ | AGMA Class | Gear Ratio $i_{tot}$ | Standard Bearings $F_{RN}$ OHL [lb] | Standard Bearings $F_{AN}$ Thrust [lb] | Heavy Duty Bearings (VL) $F_{RVL}$ OHL [lb] | Heavy Duty Bearings (VL) $F_{AVL}$ Thrust [lb] | Model Type | Weight [lb] | Dim. Page |
|---|---|---|---|---|---|---|---|---|---|---|---|---|
| 50 | 19 | 163565 | 1.7 | II | 91.6 | 33138 | 15750 | 36000 | 15750 | SK 9092.1 - 225S/4<br>SK 9092.1 - 225SH/4 | 3568 | 544 |
| | 17 | 182635 | 1.6 | II | 102.28 | 32477 | 15750 | 36000 | 15750 | | | |
| | 15 | 214688 | 1.3 | I | 120.23 | 31163 | 15750 | 36000 | 15750 | | | |
| | 22 | 145405 | 3.0 | III | 81.43 | 49500 | 22500 | | | SK 9096.1 - 225S/4<br>SK 9096.1 - 225SH/4 | 4306 | 548 |
| | 20 | 159993 | 2.8 | III | 89.60 | 49500 | 22500 | | | | | |
| | 17 | 182457 | 2.4 | III | 102.18 | 49500 | 22500 | | | | | |
| | 15 | 211027 | 2.1 | III | 118.18 | 49500 | 22500 | | | | | |
| | 13 | 238437 | 1.9 | II | 133.53 | 49500 | 22500 | | | | | |
| | 11 | 275507 | 1.6 | II | 154.29 | 49500 | 22500 | | | | | |
| | 10 | 309648 | 1.4 | II | 173.41 | 49500 | 22500 | | | | | |
| | 8.8 | 358146 | 1.2 | I | 200.57 | 49500 | 22500 | | | | | |
| | 8.4 | 373110 | 1.2 | I | 208.95 | 49500 | 22500 | | | SK 9096.1/62 - 225S/4<br>SK 9096.1/62 - 225SH/4 | 4595 | 553 |
| | 7.6 | 416965 | 1.1 | I | 233.51 | 49500 | 22500 | | | | | |
| | 6.5 | 482284 | 0.9 | * | 270.09 | 49500 | 22500 | | | | | |
| | 5.9 | 530639 | 0.8 | * | 297.17 | 49500 | 22500 | | | | | |
| | 5.5 | 572691 | 0.8 | * | 320.72 | 49500 | 22500 | | | | | |
| 60 | 193 | 19569 | 2.1 | III | 9.16 | 7799 | 10559 | 11849 | 4073 | SK 9072.1 - 225M/4<br>SK 9072.1 - 225MH/4 | 1259 | 532 |
| | 174 | 21769 | 1.9 | II | 10.19 | 7925 | 10748 | 12002 | 4118 | | | |
| | 154 | 24525 | 1.8 | II | 11.48 | 8069 | 10922 | 12168 | 4165 | | | |
| | 147 | 25764 | 1.7 | II | 12.06 | 8116 | 10991 | 12231 | 4178 | | | |
| | 141 | 26726 | 1.7 | II | 12.51 | 8165 | 11043 | 12263 | 4192 | | | |
| | 126 | 30037 | 1.5 | II | 14.06 | 8296 | 11205 | 12380 | 4226 | | | |
| | 115 | 32900 | 2.0 | III | 15.4 | 8537 | 11250 | 12782 | 4356 | | | |
| | 108 | 35121 | 1.9 | II | 16.44 | 8669 | 11250 | 12953 | 4406 | | | |
| | 97 | 39074 | 1.8 | II | 18.29 | 8768 | 11250 | 13010 | 4412 | | | |
| | 86 | 44030 | 1.7 | II | 20.61 | 8843 | 11250 | 13039 | 4406 | | | |
| | 79 | 47982 | 1.6 | II | 22.46 | 8885 | 11250 | 13057 | 4399 | | | |
| | 70 | 53921 | 1.4 | II | 25.24 | 8937 | 11250 | 12951 | 4336 | | | |
| | 60 | 62573 | 1.2 | I | 29.29 | 8912 | 11250 | 12803 | 4239 | | | |
| | 43 | 87825 | 0.8 | * | 41.11 | 8579 | 11250 | 11711 | 3814 | | | |
| | 220 | 17176 | 3.7 | III | 8.04 | 11493 | 13500 | 21375 | 9500 | SK 9082.1 - 225M/4<br>SK 9082.1 - 225MH/4 | 1832 | 536 |
| | 144 | 26298 | 2.8 | III | 12.31 | 12686 | 13500 | 21375 | 10474 | | | |
| | 121 | 31212 | 3.7 | III | 14.61 | 13358 | 13500 | 21375 | 11045 | | | |
| | 102 | 37065 | 3.1 | III | 17.35 | 13849 | 13500 | 21375 | 11441 | | | |
| | 88 | 43069 | 2.7 | III | 20.16 | 14254 | 13500 | 21375 | 11777 | | | |
| | 79 | 47790 | 2.4 | III | 22.37 | 14537 | 13500 | 21375 | 12024 | | | |
| | 66 | 57062 | 2.0 | III | 26.71 | 15003 | 13500 | 21375 | 12395 | | | |
| | 57 | 66803 | 1.7 | II | 31.27 | 15370 | 13500 | 21375 | 12740 | | | |
| | 49 | 76545 | 1.5 | II | 35.83 | 15631 | 13500 | 21375 | 12944 | | | |
| | 43 | 88743 | 1.3 | I | 41.54 | 15903 | 13500 | 21375 | 13174 | | | |
| | 40 | 95345 | 1.2 | I | 44.63 | 16007 | 13500 | 21375 | 13259 | | | |
| | 33 | 113824 | 1.0 | I | 53.28 | 16157 | 13500 | 21375 | 13430 | | | |
| | 28 | 133286 | 0.9 | * | 62.39 | 16232 | 13500 | 21375 | 13500 | | | |
| | 25 | 152748 | 0.8 | * | 71.5 | 16047 | 13500 | 21375 | 13500 | | | |

(AGMA Class I = $f_B$ 1.0 - 1.39 II = $f_B$ 1.4 - 1.99 III = $f_B$ ≥ 2.0 * = $f_B$ < 1.0) **(Model Type in blue is an Energy Efficient motor)**



Send Quote Requests to info@automatedpt.com
Call +1(800)985-6929 To Order or Order Online At Nordgearmotors.com

# 60 hp, 75 hp Gearmotors



DRIVESYSTEMS



| Motor Power $P_n$ [hp] | Output Speed $n_2$ [rpm] | Output Torque $T_2$ [lb-in] | Service Factor $f_B$ | AGMA Class | Gear Ratio $i_{tot}$ | Standard Bearings $F_{RN}$ OHL [lb] | Standard Bearings $F_{AN}$ Thrust [lb] | Heavy Duty Bearings (VL) $F_{RVL}$ OHL [lb] | Heavy Duty Bearings (VL) $F_{AVL}$ Thrust [lb] | Model Type | Weight [lb] | Dim. Page |
|---|---|---|---|---|---|---|---|---|---|---|---|---|
| 60 | 70 | 53857 | 3.3 | III | 25.21 | 19832 | 14625 | 27000 | 14625 | SK 9086.1 - 225M/4 | 2384 | 540 |
| | 60 | 63065 | 2.8 | III | 29.52 | 20502 | 14625 | 27000 | 14625 | SK 9086.1 - 225MH/4 | | |
| | 50 | 75712 | 2.1 | III | 35.44 | 21062 | 14625 | 27000 | 14625 | | | |
| | 42 | 90004 | 2.0 | III | 42.13 | 21863 | 14625 | 27000 | 14625 | | | |
| | 35 | 107458 | 1.6 | II | 50.3 | 22363 | 14625 | 27000 | 14625 | | | |
| | 30 | 125830 | 1.4 | II | 58.9 | 22813 | 14625 | 27000 | 14625 | | | |
| | 26 | 144203 | 1.2 | I | 67.5 | 23175 | 14625 | 27000 | 14625 | | | |
| | 52 | 72956 | 3.7 | III | 34.15 | 35197 | 15750 | 36000 | 15750 | SK 9092.1 - 225M/4 | 3640 | 544 |
| | 45 | 83531 | 3.4 | III | 39.1 | 35042 | 15750 | 36000 | 15750 | SK 9092.1 - 225MH/4 | | |
| | 44 | 86842 | 3.3 | III | 40.65 | 34990 | 15750 | 36000 | 15750 | | | |
| | 36 | 106283 | 2.7 | III | 49.75 | 34634 | 15750 | 36000 | 15750 | | | |
| | 30 | 125317 | 2.3 | III | 58.66 | 34214 | 15750 | 36000 | 15750 | | | |
| | 26 | 147129 | 1.9 | II | 68.87 | 33640 | 15750 | 36000 | 15750 | | | |
| | 22 | 170907 | 1.7 | II | 80 | 32893 | 15750 | 36000 | 15750 | | | |
| | 19 | 195688 | 1.4 | II | 91.6 | 31975 | 15750 | 36000 | 15750 | | | |
| | 17 | 218504 | 1.3 | I | 102.28 | 30989 | 15750 | 36000 | 15750 | | | |
| | 25 | 150419 | 2.9 | III | 70.41 | 49500 | 22500 | | | SK 9096.1 - 225M/4 | 4379 | 548 |
| | 22 | 173962 | 2.5 | III | 81.43 | 49500 | 22500 | | | SK 9096.1 - 225MH/4 | | |
| | 20 | 191416 | 2.3 | III | 89.60 | 49500 | 22500 | | | | | |
| | 17 | 218291 | 2.0 | III | 102.18 | 49500 | 22500 | | | | | |
| | 15 | 252472 | 1.8 | II | 118.18 | 49500 | 22500 | | | | | |
| | 13 | 285265 | 1.6 | II | 133.53 | 49500 | 22500 | | | | | |
| | 11 | 329615 | 1.3 | I | 154.29 | 49500 | 22500 | | | | | |
| | 8.5 | 446387 | 1.0 | I | 208.95 | 49500 | 22500 | | | SK 9096.1/62 - 225M/4 | 4668 | 553 |
| | 7.6 | 498856 | 0.9 | * | 233.51 | 49500 | 22500 | | | SK 9096.1/62 - 225MH/4 | | |
| | 6.6 | 577003 | 0.8 | * | 270.09 | 49500 | 22500 | | | | | |
| 75 | 222 | 21327 | 3 | III | 8.04 | 11239 | 13500 | 21375 | 9304 | SK 9082.1 - 250M/4 | 2238 | 536 |
| | 145 | 32654 | 2.3 | III | 12.31 | 12299 | 13500 | 21375 | 10161 | SK 9082.1 - 250MH/4 | | |
| | 122 | 38756 | 3.0 | III | 14.61 | 12931 | 13500 | 21375 | 10712 | | | |
| | 103 | 46024 | 2.5 | III | 17.35 | 13376 | 13500 | 21375 | 11045 | | | |
| | 88 | 53478 | 2.2 | III | 20.16 | 13685 | 13500 | 21375 | 11313 | | | |
| | 80 | 59340 | 1.9 | II | 22.37 | 13921 | 13500 | 21375 | 11516 | | | |
| | 67 | 70853 | 1.6 | II | 26.71 | 14236 | 13500 | 21375 | 11795 | | | |
| | 57 | 82949 | 1.4 | II | 31.27 | 14492 | 13500 | 21375 | 12004 | | | |
| | 50 | 95045 | 1.2 | I | 35.83 | 14618 | 13500 | 21375 | 12141 | | | |
| | 43 | 110192 | 1.0 | I | 41.54 | 14760 | 13500 | 21375 | 12238 | | | |
| | 40 | 118389 | 1.0 | I | 44.63 | 14726 | 13500 | 21375 | 12276 | | | |
| | 33 | 141334 | 0.8 | * | 53.28 | 14639 | 13500 | 21375 | 12258 | | | |

(AGMA Class I = $f_B$ 1.0 - 1.39 II = $f_B$ 1.4 - 1.99 III = $f_B$ ≥ 2.0 * = $f_B$ < 1.0) **(Model Type in blue is an Energy Efficient motor)**



Send Quote Requests to info@automatedpt.com
Call +1(800)985-6929 To Order or Order Online At Nordgearmotors.com

DRIVESYSTEMS

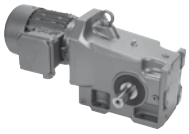



# 75 hp, 100 hp Gearmotors

| Motor Power $P_n$ [hp] | Output Speed $n_2$ [rpm] | Output Torque $T_2$ [lb-in] | Service Factor $f_B$ | AGMA Class | Gear Ratio $i_{tot}$ | Standard Bearings $F_{RN}$ OHL [lb] | Standard Bearings $F_{AN}$ Thrust [lb] | Heavy Duty Bearings (VL) $F_{RVL}$ OHL [lb] | Heavy Duty Bearings (VL) $F_{AVL}$ Thrust [lb] | Model Type | Weight [lb] | Dim. Page |
|---|---|---|---|---|---|---|---|---|---|---|---|---|
| **75** | 121 | 38994 | 3.1 | III | 14.7 | 16929 | 14625 | 27000 | 12557 | **SK 9086.1 - 250M/4** | 2789 | 540 |
| | 109 | 43451 | 3.5 | III | 16.38 | 17555 | 14625 | 27000 | 13007 | SK 9086.1 - 250MH/4 | | |
| | 100 | 47138 | 3.3 | III | 17.77 | 17802 | 14625 | 27000 | 13199 | | | |
| | 84 | 56024 | 3.2 | III | 21.12 | 18511 | 14625 | 27000 | 13714 | | | |
| | 71 | 66874 | 2.6 | III | 25.21 | 19134 | 14625 | 27000 | 14186 | | | |
| | 60 | 78307 | 2.3 | III | 29.52 | 19672 | 14625 | 27000 | 14576 | | | |
| | 50 | 94011 | 1.7 | II | 35.44 | 20077 | 14625 | 27000 | 14625 | | | |
| | 42 | 111757 | 1.6 | II | 42.13 | 20666 | 14625 | 27000 | 14625 | | | |
| | 35 | 133429 | 1.3 | I | 50.3 | 21044 | 14625 | 27000 | 14625 | | | |
| | 30 | 156242 | 1.1 | I | 58.9 | 21220 | 14625 | 27000 | 14625 | | | |
| | 26 | 179055 | 1.0 | I | 67.5 | 21310 | 14625 | 27000 | 14625 | | | |
| | 52 | 90589 | 3.0 | III | 34.15 | 34927 | 15750 | 36000 | 15750 | **SK 9092.1 - 250M/4** | 4046 | 544 |
| | 46 | 103720 | 2.7 | III | 39.1 | 34686 | 15750 | 36000 | 15750 | SK 9092.1 - 250MH/4 | | |
| | 44 | 107831 | 2.6 | III | 40.65 | 34603 | 15750 | 36000 | 15750 | | | |
| | 36 | 131970 | 2.1 | III | 49.75 | 34049 | 15750 | 36000 | 15750 | | | |
| | 30 | 155606 | 1.8 | II | 58.66 | 33388 | 15750 | 36000 | 15750 | | | |
| | 26 | 182690 | 1.6 | II | 68.87 | 32474 | 15750 | 36000 | 15750 | | | |
| | 22 | 212214 | 1.3 | I | 80 | 31275 | 15750 | 36000 | 15750 | | | |
| | 19 | 242985 | 1.2 | I | 91.6 | 29768 | 15750 | 36000 | 15750 | | | |
| | 17 | 271315 | 1.0 | I | 102.28 | 28116 | 15750 | 36000 | 15750 | | | |
| | 32 | 149239 | 3.0 | III | 56.26 | 47153 | 22500 | | | **SK 9096.1 - 250M/4** | 4785 | 548 |
| | 27 | 172609 | 2.6 | III | 65.07 | 48701 | 22500 | | | SK 9096.1 - 250MH/4 | | |
| | 25 | 186775 | 2.4 | III | 70.41 | 49471 | 22500 | | | | | |
| | 22 | 216007 | 2.0 | III | 81.43 | 49500 | 22500 | | | | | |
| | 20 | 237680 | 1.9 | II | 89.60 | 49500 | 22500 | | | | | |
| | 17 | 271050 | 1.6 | II | 102.18 | 49500 | 22500 | | | | | |
| | 15 | 313493 | 1.4 | II | 118.18 | 49500 | 22500 | | | | | |
| | 13 | 354211 | 1.2 | I | 133.53 | 49500 | 22500 | | | | | |
| | 12 | 409281 | 1.1 | I | 154.29 | 49500 | 22500 | | | | | |
| **100** | 222 | 28340 | 2.2 | III | 8.04 | 10847 | 13500 | 20997 | 8953 | **SK 9082.1 - 280S/4** | 2624 | 536 |
| | 145 | 43391 | 1.7 | II | 12.31 | 11662 | 13500 | 21375 | 9653 | SK 9082.1 - 280SH/4 | | |
| | 122 | 51498 | 2.2 | III | 14.61 | 12258 | 13500 | 21375 | 10145 | | | |
| | 103 | 61157 | 1.9 | II | 17.35 | 12553 | 13500 | 21375 | 10393 | | | |
| | 89 | 71061 | 1.6 | II | 20.16 | 12762 | 13500 | 21375 | 10575 | | | |
| | 80 | 78851 | 1.5 | II | 22.37 | 12884 | 13500 | 21375 | 10712 | | | |
| | 67 | 94149 | 1.2 | I | 26.71 | 12989 | 13500 | 21375 | 10834 | | | |
| | 57 | 110223 | 1.0 | I | 31.27 | 13003 | 13500 | 21375 | 10852 | | | |
| | 50 | 126296 | 0.9 | * | 35.83 | 12938 | 13500 | 21375 | 10834 | | | |
| | 43 | 146423 | 0.8 | * | 41.54 | 12751 | 13500 | 21375 | 10712 | | | |

(AGMA Class I = $f_B$ 1.0 - 1.39 II = $f_B$ 1.4 - 1.99 III = $f_B$ ≥ 2.0 * = $f_B$ < 1.0) **(Model Type in blue is an Energy Efficient motor)**


Send Quote Requests to info@automatedpt.com
Call +1(800)985-6929 To Order or Order Online At Nordgearmotors.com

# 100 hp Gearmotors



DRIVESYSTEMS

| Motor Power $P_n$ [hp] | Output Speed $n_2$ [rpm] | Output Torque $T_2$ [lb-in] | Service Factor $f_B$ | AGMA Class | Gear Ratio $i_{tot}$ | Standard Bearings $F_{RN}$ OHL [lb] | Standard Bearings $F_{AN}$ Thrust [lb] | Heavy Duty Bearings (VL) $F_{RVL}$ OHL [lb] | Heavy Duty Bearings (VL) $F_{AVL}$ Thrust [lb] | Model Type | Weight [lb] | Dim. Page |
|---|---|---|---|---|---|---|---|---|---|---|---|---|
| 100 | 222 | 28340 | 2.7 | III | 8.04 | 14324 | 14625 | 26989 | 10629 | **SK 9086.1 - 280S/4** | 3175 | 540 |
| | 187 | 33663 | 2.7 | III | 9.55 | 14879 | 14625 | 27000 | 11027 | SK 9086.1 - 280SH/4 | | |
| | 154 | 40889 | 2.7 | III | 11.6 | 15662 | 14625 | 27000 | 11608 | | | |
| | 145 | 43391 | 2.5 | III | 12.31 | 15692 | 14625 | 27000 | 11628 | | | |
| | 122 | 51816 | 2.3 | III | 14.7 | 16225 | 14625 | 27000 | 12047 | | | |
| | 109 | 57737 | 2.7 | III | 16.38 | 16846 | 14625 | 27000 | 12476 | | | |
| | 101 | 62637 | 2.5 | III | 17.77 | 16999 | 14625 | 27000 | 12598 | | | |
| | 85 | 74445 | 2.4 | III | 21.12 | 17624 | 14625 | 27000 | 13030 | | | |
| | 71 | 88862 | 2.0 | III | 25.21 | 18061 | 14625 | 27000 | 13367 | | | |
| | 61 | 104054 | 1.7 | II | 29.52 | 18425 | 14625 | 27000 | 13606 | | | |
| | 50 | 124921 | 1.3 | I | 35.44 | 18493 | 14625 | 27000 | 13694 | | | |
| | 42 | 148503 | 1.2 | I | 42.13 | 18799 | 14625 | 27000 | 13959 | | | |
| | 36 | 177301 | 1.0 | I | 50.3 | 18801 | 14625 | 27000 | 13959 | | | |
| | 30 | 207615 | 0.9 | * | 58.9 | 18574 | 14625 | 27000 | 13894 | | | |
| | 72 | 87910 | 2.5 | III | 24.94 | 34972 | 15750 | 36000 | 15750 | **SK 9092.1 - 280S/4** | 4432 | 544 |
| | 61 | 103208 | 2.5 | III | 29.28 | 34695 | 15750 | 36000 | 15750 | SK 9092.1 - 280SH/4 | | |
| | 52 | 120374 | 2.2 | III | 34.15 | 34331 | 15750 | 36000 | 15750 | | | |
| | 46 | 137822 | 2.1 | III | 39.1 | 33899 | 15750 | 36000 | 15750 | | | |
| | 44 | 143286 | 2.0 | III | 40.65 | 33748 | 15750 | 36000 | 15750 | | | |
| | 36 | 175362 | 1.6 | II | 49.75 | 32740 | 15750 | 36000 | 15750 | | | |
| | 30 | 206769 | 1.4 | II | 58.66 | 31514 | 15750 | 36000 | 15750 | | | |
| | 26 | 242758 | 1.2 | I | 68.87 | 29781 | 15750 | 36000 | 15750 | | | |
| | 22 | 281990 | 1.0 | I | 80 | 27416 | 15750 | 36000 | 15750 | | | |
| | 20 | 322878 | 0.9 | * | 91.6 | 24278 | 15750 | 36000 | 15750 | | | |
| | 17 | 360524 | 0.8 | * | 102.28 | 20504 | 15750 | 36000 | 15750 | | | |
| | 79 | 80191 | 2.9 | III | 22.75 | 36941 | 22500 | | | **SK 9096.1 - 280S/4** | 5171 | 548 |
| | 68 | 92739 | 2.9 | III | 26.31 | 38360 | 22500 | | | SK 9096.1 - 280SH/4 | | |
| | 63 | 100353 | 2.8 | III | 28.47 | 39022 | 22500 | | | | | |
| | 54 | 116074 | 2.8 | III | 32.93 | 40430 | 22500 | | | | | |
| | 49 | 127741 | 2.6 | III | 36.24 | 41373 | 22500 | | | | | |
| | 43 | 145648 | 2.4 | III | 41.32 | 42572 | 22500 | | | | | |
| | 37 | 168454 | 2.4 | III | 47.79 | 43976 | 22500 | | | | | |
| | 32 | 198309 | 2.2 | III | 56.26 | 45437 | 22500 | | | | | |
| | 27 | 229363 | 1.9 | II | 65.07 | 46746 | 22500 | | | | | |
| | 25 | 248186 | 1.8 | II | 70.41 | 47336 | 22500 | | | | | |
| | 22 | 287030 | 1.5 | II | 81.43 | 48623 | 22500 | | | | | |
| | 20 | 315828 | 1.4 | II | 89.60 | 49298 | 22500 | | | | | |
| | 17 | 360171 | 1.2 | I | 102.18 | 49500 | 22500 | | | | | |
| | 15 | 416569 | 1.1 | I | 118.18 | 49500 | 22500 | | | | | |
| | 13 | 470676 | 0.9 | * | 133.53 | 49500 | 22500 | | | | | |
| | 12 | 543852 | 0.8 | * | 154.29 | 49500 | 22500 | | | | | |

(AGMA Class I = $f_B$ 1.0 - 1.39 II = $f_B$ 1.4 - 1.99 III = $f_B$ ≥ 2.0 * = $f_B$ < 1.0) **(Model Type in blue is an Energy Efficient motor)**


Send Quote Requests to info@automatedpt.com
Call +1(800)985-6929 To Order or Order Online At Nordgearmotors.com

DRIVESYSTEMS

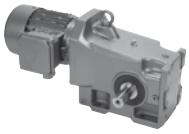



# 125 hp Gearmotors

| Motor Power $P_n$ [hp] | Output Speed $n_2$ [rpm] | Output Torque $T_2$ [lb-in] | Service Factor $f_B$ | AGMA Class | Gear Ratio $i_{tot}$ | Standard Bearings $F_{RN}$ OHL [lb] | Standard Bearings $F_{AN}$ Thrust [lb] | Heavy Duty Bearings (VL) $F_{RVL}$ OHL [lb] | Heavy Duty Bearings (VL) $F_{AVL}$ Thrust [lb] | Model Type | Weight [lb] | Dim. Page |
|---|---|---|---|---|---|---|---|---|---|---|---|---|
| **125** | 222 | 35465 | 1.8 | II | 8.04 | 10422 | 13163 | 20288 | 8613 | **SK 9082.1 - 280M/4** | 2734 | 536 |
| | 145 | 54298 | 1.4 | II | 12.31 | 11048 | 13500 | 21375 | 9140 | SK 9082.1 - 280MH/4 | | |
| | 122 | 64443 | 1.8 | II | 14.61 | 11592 | 13500 | 21375 | 9608 | | | |
| | 103 | 76529 | 1.5 | II | 17.35 | 11750 | 13500 | 21375 | 9779 | | | |
| | 89 | 88924 | 1.3 | I | 20.16 | 11817 | 13500 | 21375 | 9839 | | | |
| | 80 | 98672 | 1.2 | I | 22.37 | 11826 | 13500 | 21375 | 9889 | | | |
| | 67 | 117815 | 1.0 | I | 26.71 | 11770 | 13500 | 21375 | 9824 | | | |
| | 57 | 137929 | 0.8 | * | 31.27 | 11516 | 13500 | 21375 | 9700 | | | |
| | 222 | 35464 | 3.0 | III | 8.04 | 13946 | 14625 | 26312 | 10343 | **SK 9086.1 - 280M/4** | 3285 | 540 |
| | 187 | 42124 | 2.7 | III | 9.55 | 14447 | 14625 | 27000 | 10697 | SK 9086.1 - 280MH/4 | | |
| | 154 | 51166 | 2.9 | III | 11.6 | 15174 | 14625 | 27000 | 11225 | | | |
| | 145 | 54298 | 2.3 | III | 12.31 | 15095 | 14625 | 27000 | 11187 | | | |
| | 121 | 64840 | 2.0 | III | 14.7 | 15563 | 14625 | 27000 | 11498 | | | |
| | 109 | 72251 | 2.3 | III | 16.38 | 16144 | 14625 | 27000 | 11950 | | | |
| | 101 | 78382 | 2.1 | III | 17.77 | 16202 | 14625 | 27000 | 12006 | | | |
| | 85 | 93158 | 1.9 | II | 21.12 | 16686 | 14625 | 27000 | 12357 | | | |
| | 71 | 111199 | 1.6 | II | 25.21 | 16983 | 14625 | 27000 | 12557 | | | |
| | 61 | 130210 | 1.4 | II | 29.52 | 17087 | 14625 | 27000 | 12679 | | | |
| | 50 | 156322 | 1.0 | I | 35.44 | 16868 | 14625 | 27000 | 12557 | | | |
| | 42 | 185831 | 1.0 | I | 42.13 | 16922 | 14625 | 27000 | 12598 | | | |
| | 36 | 221869 | 0.8 | * | 50.3 | 16493 | 14625 | 27000 | 12357 | | | |
| | 167 | 47108 | 3.1 | III | 10.68 | 35485 | 15617 | 36000 | 15491 | **SK 9092.1 - 280M/4** | 4542 | 544 |
| | 155 | 50946 | 3.1 | III | 11.55 | 35449 | 15750 | 36000 | 15750 | SK 9092.1 - 280MH/4 | | |
| | 127 | 62194 | 2.8 | III | 14.1 | 35332 | 15750 | 36000 | 15750 | | | |
| | 103 | 76132 | 2.4 | III | 17.26 | 35152 | 15750 | 36000 | 15750 | | | |
| | 88 | 89894 | 2.9 | III | 20.38 | 34938 | 15750 | 36000 | 15750 | | | |
| | 72 | 110008 | 2.6 | III | 24.94 | 34558 | 15750 | 36000 | 15750 | | | |
| | 61 | 129151 | 2.2 | III | 29.28 | 34121 | 15750 | 36000 | 15750 | | | |
| | 52 | 150632 | 1.9 | II | 34.15 | 33539 | 15750 | 36000 | 15750 | | | |
| | 46 | 172466 | 1.6 | II | 39.1 | 32841 | 15750 | 36000 | 15750 | | | |
| | 44 | 179303 | 1.6 | II | 40.65 | 32598 | 15750 | 36000 | 15750 | | | |
| | 36 | 219443 | 1.3 | I | 49.75 | 30944 | 15750 | 36000 | 15750 | | | |
| | 30 | 258744 | 1.1 | I | 58.66 | 28883 | 15750 | 36000 | 15750 | | | |
| | 26 | 303779 | 0.9 | * | 68.87 | 25844 | 15750 | 36000 | 15750 | | | |
| | 22 | 352872 | 0.8 | * | 80 | 21362 | 15750 | 36000 | 15750 | | | |
| | 63 | 125578 | 3.0 | III | 28.47 | 38194 | 22500 | | | **SK 9096.1 - 280M/4** | 5281 | 548 |
| | 54 | 145251 | 3.0 | III | 32.93 | 39481 | 22500 | | | SK 9096.1 - 280MH/4 | | |
| | 49 | 159851 | 2.8 | III | 36.24 | 40307 | 22500 | | | | | |
| | 43 | 182259 | 2.4 | III | 41.32 | 41364 | 22500 | | | | | |
| | 37 | 210797 | 2.1 | III | 47.79 | 42665 | 22500 | | | | | |
| | 32 | 248158 | 1.8 | II | 56.26 | 43688 | 22500 | | | | | |
| | 27 | 287018 | 1.5 | II | 65.07 | 44807 | 22500 | | | | | |
| | 25 | 310572 | 1.4 | II | 70.41 | 45272 | 22500 | | | | | |
| | 22 | 359180 | 1.2 | I | 81.43 | 46193 | 22500 | | | | | |

(AGMA Class I = $f_B$ 1.0 - 1.39 II = $f_B$ 1.4 - 1.99 III = $f_B$ ≥ 2.0 * = $f_B$ < 1.0) **(Model Type in blue is an Energy Efficient motor)**


Send Quote Requests to info@automatedpt.com
Call +1(800)985-6929 To Order or Order Online At Nordgearmotors.com

# 125 hp, 150 hp Gearmotors



DRIVESYSTEMS

| Motor Power $P_n$ [hp] | Output Speed $n_2$ [rpm] | Output Torque $T_2$ [lb-in] | Service Factor $f_B$ | AGMA Class | Gear Ratio $i_{tot}$ | Standard Bearings $F_{RN}$ OHL [lb] | Standard Bearings $F_{AN}$ Thrust [lb] | Heavy Duty Bearings (VL) $F_{RVL}$ OHL [lb] | Heavy Duty Bearings (VL) $F_{AVL}$ Thrust [lb] | Model Type | Weight [lb] | Dim. Page |
|---|---|---|---|---|---|---|---|---|---|---|---|---|
| **125** | 20 | 395217 | 1.1 | I | 89.60 | 46625 | 22500 | | | **SK 9096.1 - 280M/4** | 5281 | 548 |
| | 17 | 450706 | 1.0 | I | 102.18 | 46937 | 22500 | | | SK 9096.1 - 280MH/4 | | |
| | 15 | 521281 | 0.8 | * | 118.18 | 47480 | 22500 | | | | | |
| | 13 | 588988 | 0.8 | * | 133.53 | 47306 | 22500 | | | | | |
| **150** | 222 | 42510 | 2.5 | III | 8.04 | 13568 | 14625 | 25643 | 10049 | **SK 9086.1 - 315S/4** | 3660 | 540 |
| | 187 | 50496 | 2.3 | III | 9.55 | 13988 | 14625 | 26417 | 10359 | SK 9086.1 - 315SH/4 | | |
| | 154 | 61336 | 2.5 | III | 11.6 | 14684 | 14625 | 27000 | 10852 | | | |
| | 145 | 65090 | 1.9 | II | 12.31 | 14499 | 14625 | 27000 | 10748 | | | |
| | 122 | 77727 | 1.7 | II | 14.7 | 14798 | 14625 | 27000 | 10994 | | | |
| | 109 | 86610 | 1.9 | II | 16.38 | 15426 | 14625 | 27000 | 11462 | | | |
| | 101 | 93960 | 1.8 | II | 17.77 | 15413 | 14625 | 27000 | 11423 | | | |
| | 85 | 111673 | 1.6 | II | 21.12 | 15739 | 14625 | 27000 | 11684 | | | |
| | 71 | 133299 | 1.3 | I | 25.21 | 15824 | 14625 | 27000 | 11741 | | | |
| | 61 | 156088 | 1.1 | I | 29.52 | 15779 | 14625 | 27000 | 11720 | | | |
| | 50 | 187391 | 0.9 | * | 35.44 | 15203 | 14625 | 27000 | 11369 | | | |
| | 42 | 222764 | 0.8 | * | 42.13 | 14985 | 14625 | 27000 | 11261 | | | |
| | 167 | 56471 | 2.6 | III | 10.68 | 35395 | 15296 | 36000 | 15172 | **SK 9092.1 - 315S/4** | 4917 | 544 |
| | 155 | 61071 | 2.6 | III | 11.55 | 35345 | 15568 | 36000 | 15444 | SK 9092.1 - 315SH/4 | | |
| | 127 | 74554 | 2.3 | III | 14.1 | 35174 | 15750 | 36000 | 15750 | | | |
| | 104 | 91263 | 2.0 | III | 17.26 | 34916 | 15750 | 36000 | 15750 | | | |
| | 88 | 107760 | 2.4 | III | 20.38 | 34605 | 15750 | 36000 | 15750 | | | |
| | 72 | 131871 | 2.1 | III | 24.94 | 34052 | 15750 | 36000 | 15750 | | | |
| | 61 | 154819 | 1.8 | II | 29.28 | 33413 | 15750 | 36000 | 15750 | | | |
| | 52 | 180570 | 1.6 | II | 34.15 | 32553 | 15750 | 36000 | 15750 | | | |
| | 46 | 206743 | 1.4 | II | 39.1 | 31514 | 15750 | 36000 | 15750 | | | |
| | 44 | 214939 | 1.3 | I | 40.65 | 31151 | 15750 | 36000 | 15750 | | | |
| | 36 | 263055 | 1.1 | I | 49.75 | 28627 | 15750 | 36000 | 15750 | | | |
| | 30 | 310167 | 0.9 | * | 58.66 | 25342 | 15750 | 36000 | 15750 | | | |
| | 26 | 364153 | 0.8 | * | 68.87 | 20079 | 15750 | 36000 | 15750 | | | |
| | 79 | 120286 | 2.6 | III | 22.75 | 35611 | 22500 | | | **SK 9096.1 - 315S/4** | 5656 | 548 |
| | 68 | 139115 | 2.6 | III | 26.31 | 36817 | 22500 | | | SK 9096.1 - 315SH/4 | | |
| | 63 | 150536 | 2.5 | III | 28.47 | 37366 | 22500 | | | | | |
| | 54 | 174119 | 2.5 | III | 32.93 | 38529 | 22500 | | | | | |
| | 49 | 191621 | 2.3 | III | 36.24 | 39242 | 22500 | | | | | |
| | 43 | 218481 | 2.0 | III | 41.32 | 40093 | 22500 | | | | | |
| | 37 | 252692 | 1.8 | II | 47.79 | 41135 | 22500 | | | | | |
| | 32 | 297477 | 1.5 | II | 56.26 | 41987 | 22500 | | | | | |
| | 27 | 344060 | 1.3 | I | 65.07 | 42824 | 22500 | | | | | |
| | 25 | 372296 | 1.2 | I | 70.41 | 43151 | 22500 | | | | | |
| | 22 | 430565 | 1.0 | I | 81.43 | 43664 | 22500 | | | | | |
| | 20 | 473764 | 0.9 | * | 89.60 | 43877 | 22500 | | | | | |
| | 17 | 540281 | 0.8 | * | 102.18 | 43749 | 22500 | | | | | |

(AGMA Class I = $f_B$ 1.0 - 1.39 II = $f_B$ 1.4 - 1.99 III = $f_B$ ≥ 2.0 * = $f_B$ < 1.0) **(Model Type in blue is an Energy Efficient motor)**


Send Quote Requests to info@automatedpt.com
Call +1(800)985-6929 To Order or Order Online At Nordgearmotors.com

DRIVESYSTEMS

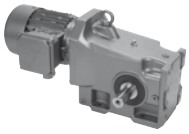



# 175 hp, 200 hp Gearmotors

| Motor Power $P_n$ [hp] | Output Speed $n_2$ [rpm] | Output Torque $T_2$ [lb-in] | Service Factor $f_B$ | AGMA Class | Gear Ratio $i_{tot}$ | Standard Bearings $F_{RN}$ OHL [lb] | Standard Bearings $F_{AN}$ Thrust [lb] | Heavy Duty Bearings (VL) $F_{RVL}$ OHL [lb] | Heavy Duty Bearings (VL) $F_{AVL}$ Thrust [lb] | Model Type | Weight [lb] | Dim. Page |
|---|---|---|---|---|---|---|---|---|---|---|---|---|
| **175** | 223 | 49540 | 2.3 | III | 8.04 | 13192 | 14625 | 24941 | 9763 | **SK 9086.1 - 315M/4** | 3837 | 540 |
| | 187 | 58845 | 2.0 | III | 9.55 | 13514 | 14625 | 25632 | 10033 | SK 9086.1 - 315MH/4 | | |
| | 154 | 71476 | 2.1 | III | 11.6 | 14121 | 14625 | 26795 | 10460 | | | |
| | 145 | 75851 | 1.6 | II | 12.31 | 13928 | 14625 | 26442 | 10310 | | | |
| | 122 | 90578 | 1.5 | II | 14.7 | 14126 | 14625 | 26870 | 10460 | | | |
| | 109 | 100929 | 1.7 | II | 16.38 | 14715 | 14625 | 27000 | 10906 | | | |
| | 101 | 109494 | 1.5 | II | 17.77 | 14623 | 14625 | 27000 | 10836 | | | |
| | 85 | 130136 | 1.4 | II | 21.12 | 14841 | 14625 | 27000 | 10994 | | | |
| | 71 | 155338 | 1.1 | I | 25.21 | 14713 | 14625 | 27000 | 10940 | | | |
| | 61 | 181895 | 1.0 | I | 29.52 | 14425 | 14625 | 27000 | 10784 | | | |
| | 168 | 65807 | 2.4 | III | 10.68 | 35289 | 15003 | 36000 | 14884 | **SK 9092.1 - 315M/4** | 5094 | 544 |
| | 155 | 71168 | 2.3 | III | 11.55 | 35222 | 15224 | 36000 | 15100 | SK 9092.1 - 315MH/4 | | |
| | 127 | 86881 | 2.0 | III | 14.1 | 34988 | 15750 | 36000 | 15694 | | | |
| | 104 | 106352 | 1.7 | II | 17.26 | 34634 | 15750 | 36000 | 15750 | | | |
| | 88 | 125576 | 2.3 | III | 20.38 | 34209 | 15750 | 36000 | 15750 | | | |
| | 72 | 153674 | 1.8 | II | 24.94 | 33446 | 15750 | 36000 | 15750 | | | |
| | 61 | 180416 | 1.6 | II | 29.28 | 32558 | 15750 | 36000 | 15750 | | | |
| | 52 | 210424 | 1.3 | I | 34.15 | 31354 | 15750 | 36000 | 15750 | | | |
| | 44 | 250475 | 1.1 | I | 40.65 | 29358 | 15750 | 36000 | 15750 | | | |
| | 36 | 306547 | 0.9 | * | 49.75 | 25630 | 15750 | 36000 | 15750 | | | |
| | 31 | 361448 | 0.8 | * | 58.66 | 20399 | 15750 | 36000 | 15750 | | | |
| | 79 | 140180 | 2.9 | III | 22.75 | 34918 | 22500 | | | **SK 9096.1 - 315M/4** | 5832 | 548 |
| | 68 | 162116 | 2.7 | III | 26.31 | 36018 | 22500 | | | SK 9096.1 - 315MH/4 | | |
| | 63 | 175425 | 2.5 | III | 28.47 | 36482 | 22500 | | | | | |
| | 54 | 202906 | 2.2 | III | 32.93 | 37577 | 22500 | | | | | |
| | 49 | 223302 | 2.0 | III | 36.24 | 38176 | 22500 | | | | | |
| | 43 | 254604 | 1.7 | II | 41.32 | 38810 | 22500 | | | | | |
| | 37 | 294470 | 1.5 | II | 47.79 | 39724 | 22500 | | | | | |
| | 32 | 346660 | 1.3 | I | 56.26 | 40264 | 22500 | | | | | |
| | 28 | 400945 | 1.1 | I | 65.07 | 40865 | 22500 | | | | | |
| | 25 | 433849 | 1.0 | I | 70.41 | 40966 | 22500 | | | | | |
| | 22 | 501751 | 0.9 | * | 81.43 | 41159 | 22500 | | | | | |
| | 20 | 552093 | 0.8 | * | 89.60 | 41234 | 22500 | | | | | |
| **200** | 223 | 56617 | 2.0 | III | 8.04 | 12798 | 14625 | 24253 | 9486 | **SK 9086.1 - 315MA/4** | 4167 | 540 |
| | 187 | 67250 | 1.7 | II | 9.55 | 13082 | 14625 | 24779 | 9671 | SK 9086.1 - 315MAH/4 | | |
| | 154 | 81686 | 1.8 | II | 11.6 | 13601 | 14625 | 25862 | 10080 | | | |
| | 145 | 86685 | 1.4 | II | 12.31 | 13354 | 14625 | 25423 | 9873 | | | |
| | 122 | 103515 | 1.3 | I | 14.7 | 13358 | 14625 | 25601 | 9938 | | | |
| | 109 | 115346 | 1.5 | II | 16.38 | 13984 | 14625 | 26804 | 10377 | | | |
| | 101 | 125134 | 1.3 | I | 17.77 | 13808 | 14625 | 26501 | 10244 | | | |
| | 85 | 148724 | 1.2 | I | 21.12 | 13856 | 14625 | 26795 | 10343 | | | |
| | 71 | 177525 | 1.0 | I | 25.21 | 13545 | 14625 | 26375 | 10148 | | | |
| | 61 | 207876 | 0.9 | * | 29.52 | 13079 | 14207 | 25724 | 9842 | | | |

(AGMA Class I = $f_B$ 1.0 - 1.39 II = $f_B$ 1.4 - 1.99 III = $f_B$ ≥ 2.0 * = $f_B$ < 1.0) **(Model Type in blue is an Energy Efficient motor)**


Send Quote Requests to info@automatedpt.com
Call +1(800)985-6929 To Order or Order Online At Nordgearmotors.com

# 200 hp Gearmotors



DRIVESYSTEMS

| Motor Power $P_n$ [hp] | Output Speed $n_2$ [rpm] | Output Torque $T_2$ [lb-in] | Service Factor $f_B$ | AGMA Class | Gear Ratio $i_{tot}$ | Standard Bearings $F_{RN}$ OHL [lb] | Standard Bearings $F_{AN}$ Thrust [lb] | Heavy Duty Bearings (VL) $F_{RVL}$ OHL [lb] | Heavy Duty Bearings (VL) $F_{AVL}$ Thrust [lb] | Model Type | Weight [lb] | Dim. Page |
|---|---|---|---|---|---|---|---|---|---|---|---|---|
| **200** | 168 | 75207 | 2.1 | III | 10.68 | 35165 | 14695 | 36000 | 14576 | **SK 9092.1 - 315MA/4** | 5424 | 544 |
| | 155 | 81334 | 2.0 | III | 11.55 | 35075 | 14933 | 36000 | 14767 | SK 9092.1 - 315MAH/4 | | |
| | 127 | 99290 | 1.7 | II | 14.1 | 34772 | 15395 | 36000 | 15271 | | | |
| | 104 | 121543 | 1.5 | II | 17.26 | 34304 | 15750 | 36000 | 15719 | | | |
| | 88 | 143513 | 2.0 | III | 20.38 | 33741 | 15750 | 36000 | 15750 | | | |
| | 72 | 175624 | 1.6 | II | 24.94 | 32731 | 15750 | 36000 | 15750 | | | |
| | 61 | 206186 | 1.4 | II | 29.28 | 31538 | 15750 | 36000 | 15750 | | | |
| | 52 | 240480 | 1.2 | I | 34.15 | 29900 | 15750 | 36000 | 15750 | | | |
| | 44 | 286252 | 1.0 | I | 40.65 | 27126 | 15750 | 36000 | 15750 | | | |
| | 36 | 350333 | 0.8 | * | 49.75 | 21634 | 15750 | 36000 | 15750 | | | |
| | 79 | 160202 | 2.6 | III | 22.75 | 34340 | 22500 | | | **SK 9096.1 - 315MA/4** | 6163 | 548 |
| | 68 | 185272 | 2.4 | III | 26.31 | 35282 | 22500 | | | SK 9096.1 - 315MAH/4 | | |
| | 63 | 200482 | 2.2 | III | 28.47 | 35654 | 22500 | | | | | |
| | 54 | 231889 | 1.9 | II | 32.93 | 36563 | 22500 | | | | | |
| | 49 | 255197 | 1.7 | II | 36.24 | 37105 | 22500 | | | | | |
| | 43 | 290970 | 1.5 | II | 41.32 | 37589 | 22500 | | | | | |
| | 37 | 336531 | 1.3 | I | 47.79 | 38239 | 22500 | | | | | |
| | 32 | 396175 | 1.1 | I | 56.26 | 38513 | 22500 | | | | | |
| | 28 | 458214 | 1.0 | I | 65.07 | 38977 | 22500 | | | | | |
| | 25 | 495818 | 0.9 | * | 70.41 | 38711 | 22500 | | | | | |
| | 22 | 573419 | 0.8 | * | 81.43 | 38579 | 22500 | | | | | |

GEARMOTORS

(AGMA Class I = $f_B$ 1.0 - 1.39 II = $f_B$ 1.4 - 1.99 III = $f_B$ ≥ 2.0 * = $f_B$ < 1.0) **(Model Type in blue is an Energy Efficient motor)**


Send Quote Requests to info@automatedpt.com
Call +1(800)985-6929 To Order or Order Online At Nordgearmotors.com

Send Quote Requests to info@automatedpt.com
Call +1(800)985-6929 To Order or Order Online At Nordgearmotors.com

# Right-angle Helical-bevel Reducers
# Selection & Combinations

## Selection

- SK 92072
- SK 92172
- SK 92372
- SK 92672
- SK 9012.1
- SK 9013.1
- SK 9016.1
- SK 9017.1
- SK 92772
- SK 9022.1
- SK 9023.1
- SK 9032.1
- SK 9033.1
- SK 9042.1
- SK 9043.1
- SK 9052.1
- SK 9053.1
- SK 9072.1
- SK 9072.1/32
- SK 9072.1/42
- SK 9082.1
- SK 9082.1/42
- SK 9082.1/52
- SK 9086.1
- SK 9086.1/52
- SK 9092.1
- SK 9092.1/52
- SK 9096.1
- SK 9096.1/62
- SK 9096.1/63

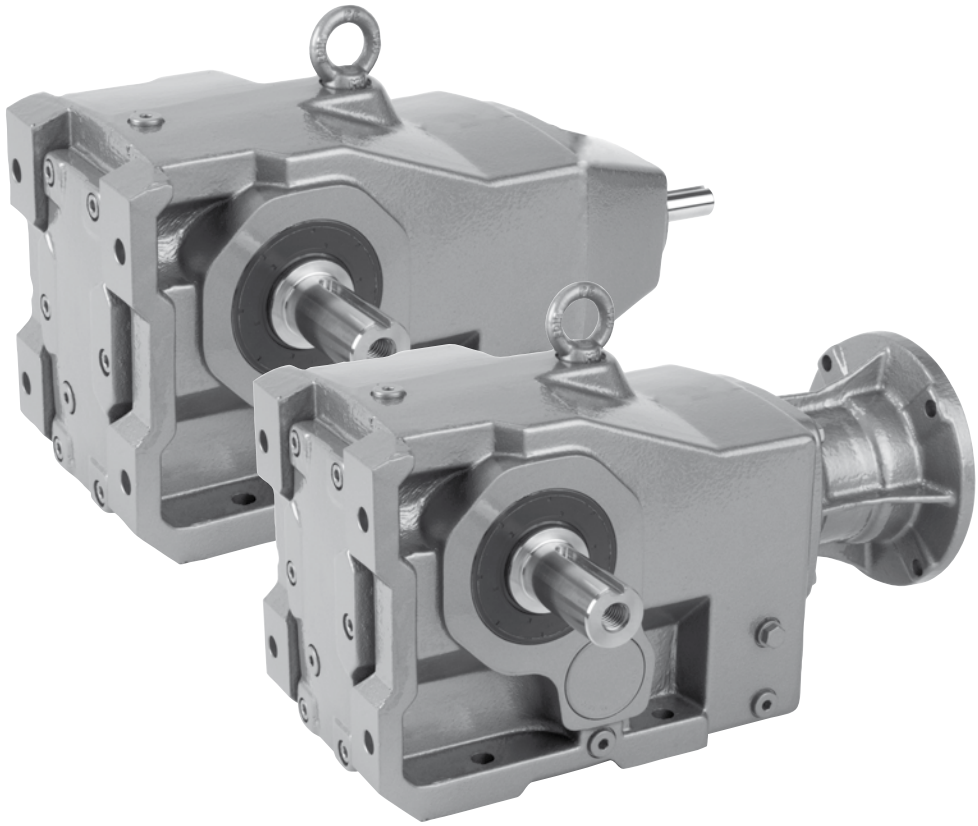

NORD® DRIVESYSTEMS

www.nord.com

UNICASE™

| Model Type | Gear Ratio $i_{tot}$ | Output Speed $n_2$ 1750 rpm [rpm] | Output Torque* $T_{2\,max}$ [lb-in] | Max. Solid in 1750 rpm [hp] |
|---|---|---|---|---|
| SK 92772 | 4.81 | 364 | 3629 | 7.50 |
| | 5.43 | 322 | 3761 | 7.50 |
| | 6.11 | 286 | 3717 | 7.50 |
| | 6.41 | 273 | 3983 | 7.50 |
| | 7.60 | 230 | 4204 | 7.50 |
| | 8.55 | 205 | 4381 | 7.50 |
| | 9.63 | 182 | 4381 | 7.50 |
| | 10.88 | 161 | 4558 | 7.50 |
| | 12.43 | 141 | 4558 | 7.50 |
| | 13.91 | 126 | 4735 | 7.50 |
| | 15.60 | 112 | 5177 | 7.50 |
| | 17.83 | 98 | 5177 | 7.50 |
| | **19.73** | 89 | 5310 | 7.50 |
| | **22.22** | 79 | 5487 | 6.88 |
| | **25.39** | 69 | 5753 | 6.30 |





Send Quote Requests to info@automatedpt.com
Call +1(800)985-6929 To Order or Order Online At Nordgearmotors.com

# SK 92072, SK 92172
# NEMA-C + W
# Ratings & Combinations

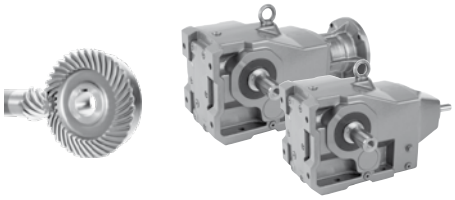

DRIVESYSTEMS

| Model Type | Gear Ratio | Output Speed | Output Torque* | Maximum input power◈ Solid input shafts type "W" | | | | NEMA C-Face* Available Combinations | | | | | | | |
|---|---|---|---|---|---|---|---|---|---|---|---|---|---|---|---|
| | | | | Input Speed | | | | | | | | | | | |
| | $i_{tot}$ | $n_2$ 1750 rpm | $T_{2\,max}$ | 1750 rpm | 1150 rpm | 875 rpm | 580 rpm | | | | | | | | |
| | | [rpm] | [lb-in] | [hp] | [hp] | [hp] | [hp] | 56C | 140TC | 180TC | 210TC | 250TC | 280TC | 320TC | 360TC |
| **SK 92072** | 3.85 | 455 | 708 | 2.00 | 1.32 | 1.00 | 0.66 | X | X | | | | | | |
| | 5.24 | 334 | 708 | 2.00 | 1.32 | 1.00 | 0.66 | X | X | | | | | | |
| | 5.79 | 302 | 708 | 2.00 | 1.32 | 1.00 | 0.66 | X | X | | | | | | |
| | 6.44 | 272 | 752 | 2.00 | 1.32 | 1.00 | 0.66 | X | X | | | | | | |
| | 7.87 | 222 | 797 | 2.00 | 1.32 | 1.00 | 0.66 | X | X | | | | | | |
| | 8.99 | 195 | 797 | 2.00 | 1.32 | 1.00 | 0.66 | X | X | | | | | | |
| | 9.68 | 181 | 797 | 2.00 | 1.32 | 1.00 | 0.66 | X | X | | | | | | |
| | 11.06 | 158 | 797 | 2.00 | 1.32 | 1.00 | 0.66 | X | X* | | | | | | |
| | **13.55** | 129 | 664 | 1.36 | 0.90 | 0.68 | 0.45 | X | X* | | | | | | |
| | **17.56** | 100 | 531 | 0.84 | 0.56 | 0.42 | 0.28 | X* | X* | | | | | | |
| | **20.37** | 86 | 797 | 1.09 | 0.72 | 0.54 | 0.36 | X | X* | | | | | | |
| | **23.28** | 75 | 797 | 0.95 | 0.63 | 0.47 | 0.31 | X* | X* | | | | | | |
| | **26.39** | 66 | 797 | 0.83 | 0.55 | 0.42 | 0.28 | X* | X* | | | | | | |
| | **30.15** | 58 | 620 | 0.57 | 0.38 | 0.29 | 0.19 | X* | X* | | | | | | |
| | **34.73** | 50 | 664 | 0.53 | 0.35 | 0.26 | 0.17 | X* | | | | | | | |
| | **39.67** | 44 | 708 | 0.49 | 0.33 | 0.25 | 0.16 | X* | | | | | | | |
| | **47.83** | 37 | 398 | 0.23 | 0.15 | 0.12 | 0.08 | X* | | | | | | | |
| | **54.65** | 32 | 443 | 0.22 | 0.15 | 0.11 | 0.07 | X* | | | | | | | |
| **SK 92172** | 4.10 | 427 | 664 | 2.00 | 1.32 | 1.00 | 0.66 | X | X | | | | | | |
| | 4.77 | 367 | 708 | 2.00 | 1.32 | 1.00 | 0.66 | X | X | | | | | | |
| | 5.33 | 328 | 752 | 2.00 | 1.32 | 1.00 | 0.66 | X | X | | | | | | |
| | 6.04 | 290 | 797 | 2.00 | 1.32 | 1.00 | 0.66 | X | X | | | | | | |
| | 7.04 | 249 | 841 | 2.00 | 1.32 | 1.00 | 0.66 | X | X | | | | | | |
| | 8.01 | 218 | 885 | 2.00 | 1.32 | 1.00 | 0.66 | X | X | | | | | | |
| | 9.07 | 193 | 929 | 2.00 | 1.32 | 1.00 | 0.66 | X | X | | | | | | |
| | 10.37 | 169 | 974 | 2.00 | 1.32 | 1.00 | 0.66 | X | X | | | | | | |
| | 11.81 | 148 | 1018 | 2.00 | 1.32 | 1.00 | 0.66 | X | X | | | | | | |
| | 13.49 | 130 | 1062 | 2.00 | 1.32 | 1.00 | 0.66 | X | X | | | | | | |
| | 15.61 | 112 | 1062 | 1.89 | 1.25 | 0.94 | 0.62 | X | X* | | | | | | |
| | **18.79** | 93 | 752 | 1.11 | 0.73 | 0.56 | 0.37 | X | X* | | | | | | |
| | **22.78** | 77 | 1062 | 1.30 | 0.86 | 0.65 | 0.43 | X | X* | | | | | | |
| | **26.03** | 67 | 1062 | 1.13 | 0.75 | 0.56 | 0.37 | X | X* | | | | | | |
| | **28.24** | 62 | 1062 | 1.04 | 0.69 | 0.52 | 0.34 | X | X* | | | | | | |
| | **32.27** | 54 | 1062 | 0.91 | 0.60 | 0.45 | 0.30 | X* | X* | | | | | | |
| | **36.11** | 48 | 885 | 0.67 | 0.44 | 0.34 | 0.22 | X* | X* | | | | | | |
| | **41.26** | 42 | 1018 | 0.68 | 0.45 | 0.34 | 0.22 | X* | X* | | | | | | |
| | **46.90** | 37 | 664 | 0.39 | 0.26 | 0.19 | 0.13 | X* | | | | | | | |
| | **53.59** | 33 | 797 | 0.42 | 0.28 | 0.21 | 0.14 | X* | | | | | | | |
| | **63.29** | 28 | 443 | 0.20 | 0.13 | 0.10 | 0.06 | X* | | | | | | | |
| | **72.31** | 24 | 487 | 0.19 | 0.12 | 0.09 | 0.06 | X* | | | | | | | |

W + NEMA

* Caution - The motor power may exceed the gear unit's mechanical torque capacity
◈ The mechanical power limit of the solid input shaft type "W" may limit the reducer rating.
All ratings are mechanical. See page 14 for thermal considerations.

| lb | W | 56C | 140TC |
|---|---|---|---|
| **SK 92072** | 15 | 24 | 24 |
| **SK 92172** | 26 | 35 | 35 |


Send Quote Requests to info@automatedpt.com
Call +1(800)985-6929 To Order or Order Online At Nordgearmotors.com

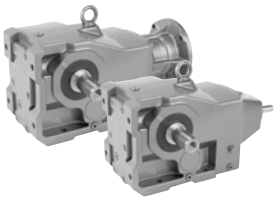



# SK 92372, SK 92672 NEMA-C + W Ratings & Combinations

| Model Type | Gear Ratio $i_{tot}$ | Output Speed $n_2$ 1750 rpm [rpm] | Output Torque* $T_{2\,max}$ [lb-in] | Maximum input power◈ Solid input shafts type "W" Input Speed 1750 rpm [hp] | 1150 rpm [hp] | 875 rpm [hp] | 580 rpm [hp] | NEMA C-Face* Available Combinations 56C | 140TC | 180TC | 210TC | 250TC | 280TC | 320TC | 360TC |
|---|---|---|---|---|---|---|---|---|---|---|---|---|---|---|---|
| **SK 92372** | 5.30 | 330 | 1283 | 6.72 | 4.43 | 3.36 | 2.22 | X | X | X | | | | | |
| | 5.97 | 293 | 1372 | 6.38 | 4.21 | 3.19 | 2.10 | X | X | X | | | | | |
| | 6.49 | 270 | 1416 | 6.07 | 4.00 | 3.03 | 2.00 | X | X | X | | | | | |
| | 7.32 | 239 | 1460 | 5.54 | 3.65 | 2.77 | 1.83 | X | X | X | | | | | |
| | 8.29 | 211 | 1549 | 5.19 | 3.42 | 2.59 | 1.71 | X | X | X | | | | | |
| | 9.47 | 185 | 1549 | 4.55 | 3.00 | 2.27 | 1.50 | X | X | X* | | | | | |
| | 10.84 | 161 | 1593 | 4.07 | 2.69 | 2.03 | 1.34 | X | X | X* | | | | | |
| | 11.39 | 154 | 1726 | 4.22 | 2.78 | 2.11 | 1.39 | X | X | X* | | | | | |
| | 13.01 | 135 | 1726 | 3.70 | 2.44 | 1.85 | 1.22 | X | X | X* | | | | | |
| | 14.65 | 119 | 1682 | 3.17 | 2.10 | 1.59 | 1.05 | X | X | | | | | | |
| | **17.06** | 103 | 2036 | 3.33 | 2.20 | 1.66 | 1.10 | X | X | X* | | | | | |
| | **19.21** | 91 | 2036 | 2.94 | 1.94 | 1.47 | 0.97 | X | X | X* | | | | | |
| | **21.95** | 80 | 1726 | 2.19 | 1.45 | 1.10 | 0.72 | X | X | X* | | | | | |
| | **24.33** | 72 | 1859 | 2.12 | 1.40 | 1.06 | 0.70 | X | X | | | | | | |
| | **27.41** | 64 | 2036 | 2.07 | 1.36 | 1.03 | 0.68 | X | X | | | | | | |
| | **31.32** | 56 | 1682 | 1.49 | 0.99 | 0.75 | 0.49 | X | X* | | | | | | |
| | **33.80** | 52 | 1637 | 1.35 | 0.89 | 0.68 | 0.45 | X | X* | | | | | | |
| | **38.62** | 45 | 1682 | 1.20 | 0.79 | 0.60 | 0.40 | X | X* | | | | | | |
| | **43.52** | 40 | 1328 | 0.84 | 0.56 | 0.42 | 0.28 | X* | X* | | | | | | |
| | **49.73** | 35 | 1505 | 0.84 | 0.55 | 0.42 | 0.28 | X* | X* | | | | | | |
| | **55.00** | 32 | 974 | 0.49 | 0.33 | 0.25 | 0.16 | X* | | | | | | | |
| | **62.85** | 28 | 1106 | 0.49 | 0.32 | 0.25 | 0.16 | X* | | | | | | | |
| **SK 92672** | 4.85 | 361 | 2345 | 7.50 | 4.95 | 3.75 | 2.48 | X | X | X | X* | | | | |
| | 5.46 | 321 | 2345 | 7.50 | 4.95 | 3.75 | 2.48 | X | X | X | X* | | | | |
| | 5.92 | 296 | 2478 | 7.50 | 4.95 | 3.75 | 2.48 | | | X | X* | | | | |
| | 6.78 | 258 | 2611 | 7.50 | 4.95 | 3.75 | 2.48 | | | X | X* | | | | |
| | 7.73 | 226 | 2744 | 7.50 | 4.95 | 3.75 | 2.48 | | | X | X* | | | | |
| | 8.71 | 201 | 2832 | 7.50 | 4.95 | 3.75 | 2.48 | X | X | X | X* | | | | |
| | 9.78 | 179 | 2832 | 7.50 | 4.95 | 3.75 | 2.48 | X | X | X | X* | | | | |
| | 11.02 | 159 | 2965 | 7.48 | 4.94 | 3.74 | 2.47 | X | X | X | X* | | | | |
| | 12.64 | 138 | 3009 | 6.59 | 4.35 | 3.29 | 2.17 | X | X | X | X* | | | | |
| | 14.08 | 124 | 3009 | 5.92 | 3.91 | 2.96 | 1.95 | X | X | X | X* | | | | |
| | 16.08 | 109 | 3275 | 5.66 | 3.74 | 2.83 | 1.87 | X | X | X | X* | | | | |
| | **18.08** | 97 | 2832 | 4.36 | 2.88 | 2.18 | 1.44 | | | X* | X* | | | | |
| | **20.37** | 86 | 3009 | 4.11 | 2.71 | 2.05 | 1.35 | | | X* | X* | | | | |
| | **23.28** | 75 | 3275 | 3.90 | 2.57 | 1.95 | 1.29 | | | X* | X* | | | | |
| | **26.55** | 66 | 2921 | 3.06 | 2.02 | 1.53 | 1.01 | X | X | X* | | | | | |
| | **29.91** | 59 | 3009 | 2.82 | 1.86 | 1.41 | 0.93 | X | X | X* | | | | | |
| | **34.17** | 51 | 3363 | 2.72 | 1.80 | 1.36 | 0.90 | X | X | X* | | | | | |
| | **37.32** | 47 | 2921 | 2.18 | 1.44 | 1.09 | 0.72 | X | X | | | | | | |
| | **42.04** | 42 | 3009 | 2.01 | 1.32 | 1.00 | 0.66 | X | X | | | | | | |
| | **48.03** | 36 | 3319 | 1.90 | 1.25 | 0.95 | 0.63 | X | X* | | | | | | |
| | **51.86** | 34 | 3053 | 1.65 | 1.09 | 0.82 | 0.54 | X | X* | | | | | | |
| | **59.25** | 30 | 3319 | 1.58 | 1.04 | 0.79 | 0.52 | X | X* | | | | | | |

* Caution - The motor power may exceed the gear unit's mechanical torque capacity
◈ The mechanical power limit of the solid input shaft type "W" may limit the reducer rating.
All ratings are mechanical. See page 14 for thermal considerations.

| lb | W | 56C | 140TC | 180TC | 210TC |
|---|---|---|---|---|---|
| **SK 92372** | 40 | 49 | 49 | 60 | - |
| **SK 92672** | 79 | 86 | 86 | 97 | 112 |


Send Quote Requests to info@automatedpt.com
Call +1(800)985-6929 To Order or Order Online At Nordgearmotors.com

# SK 9012.1, SK 9013.1
# NEMA-C + W
# Ratings & Combinations

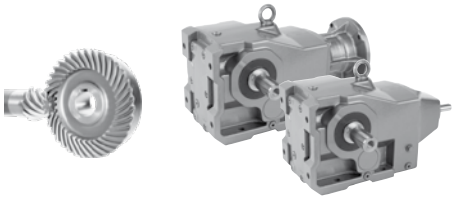



| Model Type | Gear Ratio | Output Speed | Output Torque* | Maximum input power◈ Solid input shafts type "W" | | | | NEMA C-Face* Available Combinations | | | | | | | |
|---|---|---|---|---|---|---|---|---|---|---|---|---|---|---|---|
| | | | | Input Speed | | | | | | | | | | | |
| | $i_{tot}$ | $n_2$ 1750 rpm | $T_{2\,max}$ | 1750 rpm | 1150 rpm | 875 rpm | 580 rpm | | | | | | | | |
| | | [rpm] | [lb-in] | [hp] | [hp] | [hp] | [hp] | 56C | 140TC | 180TC | 210TC | 250TC | 280TC | 320TC | 360TC |
| **SK 9012.1** | 8.09 | 216 | 1593 | 5.00 | 3.30 | 2.50 | 1.65 | X | X | X | | | | | |
| | 9.23 | 190 | 1726 | 5.00 | 3.30 | 2.50 | 1.65 | X | X | X | | | | | |
| | 10.85 | 161 | 1770 | 4.52 | 2.98 | 2.26 | 1.49 | X | X | X* | | | | | |
| | 12.23 | 143 | 1947 | 4.42 | 2.92 | 2.21 | 1.46 | X | X | X* | | | | | |
| | 15.30 | 114 | 3363 | 5.00 | 3.30 | 2.50 | 1.65 | X | X | X | | | | | |
| | 17.45 | 100 | 3363 | 5.00 | 3.30 | 2.50 | 1.65 | X | X | X | | | | | |
| | 20.87 | 84 | 3540 | 4.72 | 3.11 | 2.36 | 1.56 | X | X | X* | | | | | |
| | 24.53 | 71 | 3540 | 3.99 | 2.63 | 1.99 | 1.32 | X | X | X* | | | | | |
| | 27.65 | 63 | 3540 | 3.54 | 2.34 | 1.77 | 1.17 | X | X | X* | | | | | |
| | 31.45 | 56 | 3540 | 3.15 | 2.08 | 1.57 | 1.04 | X | X | X* | | | | | |
| | 34.81 | 50 | 3540 | 2.81 | 1.85 | 1.40 | 0.93 | X | X | X* | | | | | |
| | 41.65 | 42 | 3540 | 2.36 | 1.56 | 1.18 | 0.78 | X | X | X* | | | | | |
| | 48.95 | 36 | 3540 | 2.02 | 1.33 | 1.01 | 0.67 | X | X* | X* | | | | | |
| | 55.17 | 32 | 3540 | 1.80 | 1.19 | 0.90 | 0.59 | X | X* | X* | | | | | |
| | 62.74 | 28 | 3540 | 1.57 | 1.04 | 0.79 | 0.52 | X | X* | X* | | | | | |
| | 76.53 | 23 | 3540 | 1.29 | 0.85 | 0.65 | 0.43 | X | X* | X* | | | | | |
| | 86.00 | 20 | 3540 | 1.12 | 0.74 | 0.56 | 0.37 | X | X* | | | | | | |
| | 97.36 | 18 | 3540 | 1.01 | 0.67 | 0.51 | 0.33 | X* | X* | | | | | | |
| | **109.79** | 16 | 3540 | 0.90 | 0.59 | 0.45 | 0.30 | X* | X* | | | | | | |
| | **123.48** | 14 | 3540 | 0.79 | 0.52 | 0.39 | 0.26 | X* | | | | | | | |
| | **140.70** | 12 | 3540 | 0.67 | 0.44 | 0.34 | 0.22 | X* | | | | | | | |
| | **166.59** | 11 | 3540 | 0.62 | 0.41 | 0.31 | 0.20 | X* | | | | | | | |
| | **183.10** | 9.6 | 3540 | 0.54 | 0.36 | 0.27 | 0.18 | X* | X* | | | | | | |
| | **205.93** | 8.5 | 3540 | 0.48 | 0.32 | 0.24 | 0.16 | X* | | | | | | | |
| | **246.37** | 7.1 | 3540 | 0.40 | 0.26 | 0.20 | 0.13 | X* | | | | | | | |
| | **280.71** | 6.2 | 3540 | 0.35 | 0.23 | 0.17 | 0.11 | X* | | | | | | | |
| | **332.37** | 5.3 | 3540 | 0.30 | 0.20 | 0.15 | 0.10 | X* | | | | | | | |
| **SK 9013.1** | **141.29** | 12 | 3540 | 0.50 | 0.33 | 0.25 | 0.17 | X* | | | | | | | |
| | **177.88** | 9.8 | 3540 | 0.50 | 0.33 | 0.25 | 0.17 | X* | | | | | | | |
| | **212.83** | 8.2 | 3540 | 0.46 | 0.30 | 0.23 | 0.15 | X* | | | | | | | |
| | **281.92** | 6.2 | 3540 | 0.35 | 0.23 | 0.17 | 0.11 | X* | | | | | | | |
| | **320.60** | 5.5 | 3540 | 0.31 | 0.20 | 0.15 | 0.10 | X* | | | | | | | |
| | **439.46** | 4.0 | 3540 | 0.22 | 0.15 | 0.11 | 0.07 | X* | | | | | | | |
| | **589.96** | 3.0 | 3540 | 0.17 | 0.11 | 0.08 | 0.06 | X* | | | | | | | |
| | **667.89** | 2.6 | 3540 | 0.15 | 0.10 | 0.07 | 0.05 | X* | | | | | | | |
| | **847.07** | 2.1 | 3540 | 0.12 | 0.08 | 0.06 | 0.04 | X* | | | | | | | |
| | **1256.07** | 1.4 | 3540 | 0.08 | 0.05 | 0.04 | 0.03 | X* | | | | | | | |
| | **1412.68** | 1.2 | 3540 | 0.07 | 0.04 | 0.03 | 0.02 | X* | | | | | | | |
| | **1690.10** | 1.0 | 3540 | 0.06 | 0.04 | 0.03 | 0.02 | X* | | | | | | | |

* Caution - The motor power may exceed the gear unit's mechanical torque capacity
◈ The mechanical power limit of the solid input shaft type "W" may limit the reducer rating.
All ratings are mechanical. See page 14 for thermal considerations.

| lb | W | 56C | 140TC | 180TC |
|---|---|---|---|---|
| **SK 9012.1** | 75 | 86 | 86 | 101 |
| **SK 9013.1** | 86 | 90 | - | - |


Send Quote Requests to info@automatedpt.com
Call +1(800)985-6929 To Order or Order Online At Nordgearmotors.com

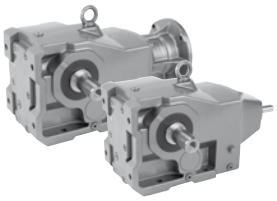



# SK 9016.1, SK 9017.1 NEMA-C + W Ratings & Combinations

| Model Type | Gear Ratio $i_{tot}$ | Output Speed $n_2$ 1750 rpm [rpm] | Output Torque* $T_{2\,max}$ [lb-in] | Maximum input power◈ Solid input shafts type "W" Input Speed 1750 rpm [hp] | 1150 rpm [hp] | 875 rpm [hp] | 580 rpm [hp] | NEMA C-Face* Available Combinations 56C | 140TC | 180TC | 210TC | 250TC | 280TC | 320TC | 360TC |
|---|---|---|---|---|---|---|---|---|---|---|---|---|---|---|---|
| **SK 9016.1** | 12.51 | 140 | 4602 | 5.00 | 3.30 | 2.50 | 1.65 | X | X | X | | | | | |
| | 15.10 | 116 | 4602 | 5.00 | 3.30 | 2.50 | 1.65 | X | X | X | | | | | |
| | 17.45 | 100 | 4779 | 5.00 | 3.30 | 2.50 | 1.65 | X | X | X | | | | | |
| | 20.51 | 85 | 5133 | 5.00 | 3.30 | 2.50 | 1.65 | X | X | X | | | | | |
| | 23.11 | 76 | 4602 | 5.00 | 3.30 | 2.50 | 1.65 | X | X | X | | | | | |
| | 26.29 | 67 | 5310 | 5.00 | 3.30 | 2.50 | 1.65 | X | X | X | | | | | |
| | 30.52 | 57 | 5310 | 4.80 | 3.17 | 2.40 | 1.58 | X | X | X* | | | | | |
| | 34.81 | 50 | 5310 | 4.21 | 2.78 | 2.11 | 1.39 | X | X | X* | | | | | |
| | 40.92 | 43 | 5310 | 3.62 | 2.39 | 1.81 | 1.20 | X | X | X* | | | | | |
| | 46.11 | 38 | 5399 | 3.25 | 2.15 | 1.63 | 1.07 | X | X | X* | | | | | |
| | 52.44 | 33 | 5399 | 2.83 | 1.87 | 1.41 | 0.93 | X | X | X* | | | | | |
| | 63.97 | 27 | 5399 | 2.31 | 1.53 | 1.16 | 0.76 | X | X | X* | | | | | |
| | 71.88 | 24 | 5310 | 2.02 | 1.33 | 1.01 | 0.67 | X | X | | | | | | |
| | 81.38 | 22 | 5310 | 1.85 | 1.22 | 0.93 | 0.61 | X | X* | | | | | | |
| | **91.77** | 19 | 4425 | 1.33 | 0.88 | 0.67 | 0.44 | X | X* | | | | | | |
| | **116.52** | 15 | 5399 | 1.28 | 0.85 | 0.64 | 0.42 | X | X* | | | | | | |
| | **142.41** | 12 | 5399 | 1.03 | 0.68 | 0.51 | 0.34 | X | X* | | | | | | |
| | **149.81** | 12 | 5399 | 1.03 | 0.68 | 0.51 | 0.34 | X | X* | | | | | | |
| | **183.10** | 9.6 | 5399 | 0.82 | 0.54 | 0.41 | 0.27 | X* | X* | | | | | | |
| | **205.93** | 8.5 | 5399 | 0.73 | 0.48 | 0.36 | 0.24 | X* | | | | | | | |
| | **234.64** | 7.5 | 5222 | 0.62 | 0.41 | 0.31 | 0.21 | X* | | | | | | | |
| | **277.84** | 6.3 | 5222 | 0.52 | 0.34 | 0.26 | 0.17 | X* | | | | | | | |
| **SK 9017.1** | **134.32** | 13 | 3806 | 0.50 | 0.33 | 0.25 | 0.17 | X* | | | | | | | |
| | **177.89** | 9.8 | 5045 | 0.50 | 0.33 | 0.25 | 0.17 | X* | | | | | | | |
| | **235.64** | 7.4 | 5399 | 0.50 | 0.33 | 0.25 | 0.17 | X* | | | | | | | |
| | **267.99** | 6.5 | 5399 | 0.50 | 0.33 | 0.25 | 0.17 | X* | | | | | | | |
| | **367.33** | 4.8 | 5399 | 0.41 | 0.27 | 0.21 | 0.14 | X* | | | | | | | |
| | **493.12** | 3.5 | 5399 | 0.30 | 0.20 | 0.15 | 0.10 | X* | | | | | | | |
| | **558.25** | 3.1 | 5399 | 0.27 | 0.18 | 0.13 | 0.09 | X* | | | | | | | |
| | **629.56** | 2.8 | 5399 | 0.24 | 0.16 | 0.12 | 0.08 | X* | | | | | | | |
| | **1256.07** | 1.4 | 5399 | 0.12 | 0.08 | 0.06 | 0.04 | X* | | | | | | | |
| | **1412.69** | 1.2 | 5399 | 0.10 | 0.07 | 0.05 | 0.03 | X* | | | | | | | |

* Caution - The motor power may exceed the gear unit's mechanical torque capacity
◈ The mechanical power limit of the solid input shaft type "W" may limit the reducer rating.
All ratings are mechanical. See page 14 for thermal considerations.

| lb | W | 56C | 140TC | 180TC |
|---|---|---|---|---|
| **SK 9016.1** | 77 | 88 | 88 | 104 |
| **SK 9017.1** | 88 | 93 | - | - |


Send Quote Requests to info@automatedpt.com
Call +1(800)985-6929 To Order or Order Online At Nordgearmotors.com

# SK 92772
# NEMA-C + W
# Ratings & Combinations

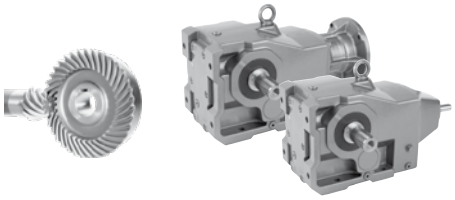

DRIVESYSTEMS

| Model Type | Gear Ratio | Output Speed | Output Torque* | Maximum input power◈ Solid input shafts type "W" | | | | NEMA C-Face* Available Combinations | | | | | | | |
|---|---|---|---|---|---|---|---|---|---|---|---|---|---|---|---|
| | | | | Input Speed | | | | | | | | | | | |
| | $i_{tot}$ | $n_2$ 1750 rpm | $T_{2\,max}$ | 1750 rpm | 1150 rpm | 875 rpm | 580 rpm | | | | | | | | |
| | | [rpm] | [lb-in] | [hp] | [hp] | [hp] | [hp] | 56C | 140TC | 180TC | 210TC | 250TC | 280TC | 320TC | 360TC |
| **SK 92772** | 4.81 | 364 | 3629 | 7.50 | 4.95 | 3.75 | 2.48 | | | X | X* | X* | | | |
| | 5.43 | 322 | 3761 | 7.50 | 4.95 | 3.75 | 2.48 | | | X | X* | X* | | | |
| | 6.11 | 286 | 3717 | 7.50 | 4.95 | 3.75 | 2.48 | | | X | X* | X* | | | |
| | 6.41 | 273 | 3983 | 7.50 | 4.95 | 3.75 | 2.48 | | | X | X* | X* | | | |
| | 7.60 | 230 | 4204 | 7.50 | 4.95 | 3.75 | 2.48 | | | X | X* | X* | | | |
| | 8.55 | 205 | 4381 | 7.50 | 4.95 | 3.75 | 2.48 | | | X | X* | X* | | | |
| | 9.63 | 182 | 4381 | 7.50 | 4.95 | 3.75 | 2.48 | | | X | X* | X* | | | |
| | 10.88 | 161 | 4558 | 7.50 | 4.95 | 3.75 | 2.48 | X | X | X | X* | | | | |
| | 12.43 | 141 | 4558 | 7.50 | 4.95 | 3.75 | 2.48 | X | X | X | X* | | | | |
| | 13.91 | 126 | 4735 | 7.50 | 4.95 | 3.75 | 2.48 | X | X | X | X* | | | | |
| | 15.60 | 112 | 5177 | 7.50 | 4.95 | 3.75 | 2.48 | X | X | X | X* | | | | |
| | 17.83 | 98 | 5177 | 7.50 | 4.95 | 3.75 | 2.48 | X | X | X | X* | | | | |
| | **19.73** | 89 | 5310 | 7.50 | 4.95 | 3.75 | 2.47 | | | X | X* | | | | |
| | **22.22** | 79 | 5487 | 6.88 | 4.54 | 3.44 | 2.27 | | | X | X* | | | | |
| | **25.39** | 69 | 5753 | 6.30 | 4.16 | 3.15 | 2.08 | | | X | X* | | | | |
| | **28.44** | 62 | 5310 | 5.22 | 3.45 | 2.61 | 1.72 | X | X | X | X* | | | | |
| | **32.04** | 55 | 5576 | 4.87 | 3.21 | 2.43 | 1.61 | X | X | X* | X* | | | | |
| | **36.61** | 48 | 5841 | 4.45 | 2.94 | 2.22 | 1.47 | X | X | X* | X* | | | | |
| | **40.77** | 43 | 3983 | 2.72 | 1.79 | 1.36 | 0.90 | X | X | | | | | | |
| | **45.93** | 38 | 4469 | 2.69 | 1.78 | 1.35 | 0.89 | X | X | | | | | | |
| | **52.48** | 33 | 5089 | 2.66 | 1.76 | 1.33 | 0.88 | X | X | | | | | | |
| | **56.02** | 31 | 3540 | 1.74 | 1.15 | 0.87 | 0.57 | X | X* | | | | | | |
| | **64.01** | 27 | 4071 | 1.74 | 1.15 | 0.87 | 0.58 | X | X* | | | | | | |

W + NEMA

* Caution - The motor power may exceed the gear unit's mechanical torque capacity
◈ The mechanical power limit of the solid input shaft type "W" may limit the reducer rating.
All ratings are mechanical. See page 14 for thermal considerations.

| lb | W | 56C | 140TC | 180TC | 210TC | 250TC |
|---|---|---|---|---|---|---|
| **SK 92772** | 99 | 101 | 101 | 112 | 128 | 128 |


Send Quote Requests to info@automatedpt.com
Call +1(800)985-6929 To Order or Order Online At Nordgearmotors.com

Send Quote Requests to info@automatedpt.com
Call +1(800)985-6929 To Order or Order Online At Nordgearmotors.com

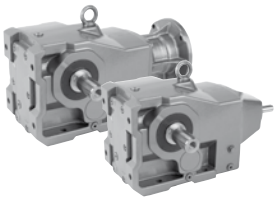



# SK 9022.1 , SK 9023.1
# NEMA-C + W
# Ratings & Combinations

| Model Type | Gear Ratio $i_{tot}$ | Output Speed $n_2$ 1750 rpm [rpm] | Output Torque* $T_{2\,max}$ [lb-in] | Maximum input power◈ Solid input shafts type "W" Input Speed 1750 rpm [hp] | 1150 rpm [hp] | 875 rpm [hp] | 580 rpm [hp] | NEMA C-Face* Available Combinations 56C | 140TC | 180TC | 210TC | 250TC | 280TC | 320TC | 360TC |
|---|---|---|---|---|---|---|---|---|---|---|---|---|---|---|---|
| **SK 9022.1** | 8.78 | 199 | 4248 | 5.00 | 3.30 | 2.50 | 1.65 | X | X | X | | | | | |
| | 11.13 | 157 | 4602 | 5.00 | 3.30 | 2.50 | 1.65 | X | X | X | | | | | |
| | 12.51 | 140 | 4779 | 5.00 | 3.30 | 2.50 | 1.65 | X | X | X | | | | | |
| | 14.56 | 120 | 5133 | 5.00 | 3.30 | 2.50 | 1.65 | X | X | X | | | | | |
| | 16.30 | 107 | 5487 | 5.00 | 3.30 | 2.50 | 1.65 | X | X | X | | | | | |
| | 17.52 | 100 | 6372 | 5.00 | 3.30 | 2.50 | 1.65 | X | X | X | | | | | |
| | 19.93 | 88 | 6726 | 5.00 | 3.30 | 2.50 | 1.65 | X | X | X | | | | | |
| | 22.41 | 78 | 6903 | 5.00 | 3.30 | 2.50 | 1.65 | X | X | X | | | | | |
| | 24.56 | 71 | 7611 | 5.00 | 3.30 | 2.50 | 1.65 | X | X | X | | | | | |
| | 26.07 | 67 | 7611 | 5.00 | 3.30 | 2.50 | 1.65 | X | X | X | | | | | |
| | 29.20 | 60 | 7611 | 5.00 | 3.30 | 2.50 | 1.65 | X | X | X | | | | | |
| | 31.38 | 56 | 7257 | 5.00 | 3.30 | 2.50 | 1.65 | X | X | X | | | | | |
| | 33.26 | 53 | 7611 | 5.00 | 3.30 | 2.50 | 1.65 | X | X | X | | | | | |
| | 39.77 | 44 | 7611 | 5.00 | 3.30 | 2.50 | 1.65 | X | X | X | | | | | |
| | 44.71 | 39 | 7611 | 4.71 | 3.11 | 2.35 | 1.55 | X | X | X* | | | | | |
| | 49.01 | 36 | 7611 | 4.35 | 2.87 | 2.17 | 1.43 | X | X | X* | | | | | |
| | 52.02 | 34 | 7611 | 4.11 | 2.71 | 2.05 | 1.35 | X | X | X* | | | | | |
| | 58.25 | 30 | 7611 | 3.62 | 2.39 | 1.81 | 1.20 | X | X | X* | | | | | |
| | 66.42 | 26 | 7611 | 3.14 | 2.07 | 1.57 | 1.04 | X | X | X* | | | | | |
| | 78.89 | 22 | 7611 | 2.66 | 1.75 | 1.33 | 0.88 | X | X | X* | | | | | |
| | **85.11** | 21 | 7611 | 2.54 | 1.67 | 1.27 | 0.84 | X | X | | | | | | |
| | 98.88 | 18 | 7611 | 2.17 | 1.43 | 1.09 | 0.72 | X | X | | | | | | |
| | **115.74** | 15 | 7611 | 1.81 | 1.20 | 0.91 | 0.60 | X | X* | | | | | | |
| | **137.57** | 13 | 7611 | 1.57 | 1.04 | 0.78 | 0.52 | X | X* | | | | | | |
| | **169.81** | 10 | 7611 | 1.21 | 0.80 | 0.60 | 0.40 | X | X* | | | | | | |
| | **184.46** | 9.5 | 7611 | 1.15 | 0.76 | 0.57 | 0.38 | X | X* | | | | | | |
| | **219.25** | 8.0 | 7611 | 0.97 | 0.64 | 0.48 | 0.32 | X* | X* | | | | | | |
| | **232.92** | 7.5 | 6195 | 0.74 | 0.49 | 0.37 | 0.24 | X* | | | | | | | |
| | **276.86** | 6.3 | 7080 | 0.71 | 0.47 | 0.35 | 0.23 | X* | | | | | | | |
| **SK 9023.1** | **228.47** | 7.7 | 5753 | 0.70 | 0.46 | 0.35 | 0.23 | X* | | | | | | | |
| | **297.67** | 5.9 | 7611 | 0.71 | 0.47 | 0.36 | 0.24 | X* | | | | | | | |
| | **339.41** | 5.2 | 7611 | 0.63 | 0.41 | 0.31 | 0.21 | X* | | | | | | | |
| | **472.43** | 3.7 | 7611 | 0.45 | 0.29 | 0.22 | 0.15 | X* | | | | | | | |
| | **561.55** | 3.1 | 7611 | 0.37 | 0.25 | 0.19 | 0.12 | X* | | | | | | | |
| | **678.31** | 2.6 | 7611 | 0.31 | 0.21 | 0.16 | 0.10 | X* | | | | | | | |
| | **753.86** | 2.3 | 7611 | 0.28 | 0.18 | 0.14 | 0.09 | X* | | | | | | | |
| | **951.94** | 1.8 | 7611 | 0.22 | 0.14 | 0.11 | 0.07 | X* | | | | | | | |
| | **1120.38** | 1.6 | 7611 | 0.19 | 0.13 | 0.10 | 0.06 | X* | | | | | | | |
| | **1504.07** | 1.2 | 7611 | 0.14 | 0.10 | 0.07 | 0.05 | X* | | | | | | | |
| | **1899.26** | 0.92 | 7611 | 0.11 | 0.07 | 0.06 | 0.04 | X* | | | | | | | |

* Caution - The motor power may exceed the gear unit's mechanical torque capacity
◈ The mechanical power limit of the solid input shaft type "W" may limit the reducer rating.
All ratings are mechanical. See page 14 for thermal considerations.

| lb | W | 56C | 140TC | 180TC |
|---|---|---|---|---|
| **SK 9022.1** | 93 | 104 | 104 | 119 |
| **SK 9023.1** | 104 | 108 | - | - |


Send Quote Requests to info@automatedpt.com
Call +1(800)985-6929 To Order or Order Online At Nordgearmotors.com

# SK 9032.1, SK 9033.1
# NEMA-C + W
# Ratings & Combinations

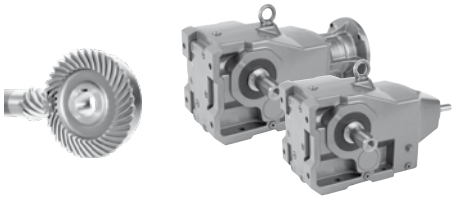

DRIVESYSTEMS



| Model Type | Gear Ratio | Output Speed | Output Torque* | Maximum input power◈ Solid input shafts type "W" | | | | NEMA C-Face* Available Combinations | | | | | | | |
|---|---|---|---|---|---|---|---|---|---|---|---|---|---|---|---|
| | | | | Input Speed | | | | | | | | | | | |
| | $i_{tot}$ | $n_2$ 1750 rpm | $T_{2\,max}$ | 1750 rpm | 1150 rpm | 875 rpm | 580 rpm | | | | | | | | |
| | | [rpm] | [lb-in] | [hp] | [hp] | [hp] | [hp] | 56C | 140TC | 180TC | 210TC | 250TC | 280TC | 320TC | 360TC |
| **SK 9032.1** | 8.48 | 206 | 7788 | 10.00 | 6.60 | 5.00 | 3.30 | X | X | X | X | | | | |
| | 10.73 | 163 | 7965 | 10.00 | 6.60 | 5.00 | 3.30 | X | X | X | X | | | | |
| | 12.68 | 138 | 8850 | 10.00 | 6.60 | 5.00 | 3.30 | X | X | X | X | | | | |
| | 13.49 | 130 | 11948 | 10.00 | 6.60 | 5.00 | 3.30 | X | X | X | X | | | | |
| | 16.04 | 109 | 12390 | 10.00 | 6.60 | 5.00 | 3.30 | X | X | X | X | | | | |
| | 17.08 | 102 | 12833 | 10.00 | 6.60 | 5.00 | 3.30 | X | X | X | X | | | | |
| | 20.23 | 87 | 13275 | 10.00 | 6.60 | 5.00 | 3.30 | X | X | X | X | | | | |
| | 23.91 | 73 | 13718 | 10.00 | 6.60 | 5.00 | 3.30 | X | X | X | X | | | | |
| | 25.03 | 70 | 13275 | 10.00 | 6.60 | 5.00 | 3.30 | X | X | X | X | | | | |
| | 29.66 | 59 | 13275 | 10.00 | 6.60 | 5.00 | 3.30 | X | X | X | X | | | | |
| | 35.61 | 49 | 13718 | 10.00 | 6.60 | 5.00 | 3.30 | X | X | X | X | | | | |
| | 38.05 | 46 | 13718 | 10.00 | 6.60 | 5.00 | 3.30 | X | X | X | X* | | | | |
| | 40.36 | 43 | 13718 | 9.36 | 6.18 | 4.68 | 3.09 | X | X | X | X* | | | | |
| | 47.70 | 37 | 13718 | 8.05 | 5.32 | 4.03 | 2.66 | X | X | X | X* | | | | |
| | 49.94 | 35 | 13718 | 7.62 | 5.03 | 3.81 | 2.51 | X | X | X | X* | | | | |
| | 59.17 | 30 | 13718 | 6.53 | 4.31 | 3.26 | 2.15 | X | X | X | X* | | | | |
| | 64.08 | 27 | 13718 | 5.88 | 3.88 | 2.94 | 1.94 | X | X | X | X* | | | | |
| | 75.91 | 23 | 13718 | 5.01 | 3.30 | 2.50 | 1.65 | X | X | X* | X* | | | | |
| | 84.17 | 21 | 13718 | 4.57 | 3.02 | 2.29 | 1.51 | X | X | X* | X* | | | | |
| | 93.50 | 19 | 13718 | 4.14 | 2.73 | 2.07 | 1.36 | X | X | X* | | | | | |
| | 110.77 | 16 | 13718 | 3.48 | 2.30 | 1.74 | 1.15 | X | X | X* | | | | | |
| | **117.70** | 15 | 13718 | 3.26 | 2.15 | 1.63 | 1.08 | X | X | | | | | | |
| | **139.44** | 13 | 13718 | 2.83 | 1.87 | 1.41 | 0.93 | X | X | | | | | | |
| | **158.74** | 11 | 13718 | 2.39 | 1.58 | 1.20 | 0.79 | X | X | X* | | | | | |
| | **188.06** | 9.3 | 13718 | 2.02 | 1.34 | 1.01 | 0.67 | X | X* | X* | | | | | |
| | **197.45** | 8.9 | 13718 | 1.94 | 1.28 | 0.97 | 0.64 | X | X* | | | | | | |
| | **233.92** | 7.5 | 13718 | 1.63 | 1.08 | 0.82 | 0.54 | X | X* | | | | | | |
| | **249.72** | 7.0 | 13718 | 1.52 | 1.01 | 0.76 | 0.50 | X | X* | | | | | | |
| | **295.85** | 5.9 | 13718 | 1.28 | 0.85 | 0.64 | 0.42 | X | X* | | | | | | |
| **SK 9033.1** | 167.45 | 10 | 13718 | 1.50 | 0.99 | 0.75 | 0.50 | X | X* | X* | | | | | |
| | 214.83 | 8.1 | 13718 | 1.50 | 0.99 | 0.75 | 0.50 | X | X* | X* | | | | | |
| | 267.65 | 6.5 | 13718 | 1.41 | 0.93 | 0.71 | 0.47 | X | X* | | | | | | |
| | 352.25 | 5.0 | 13718 | 1.09 | 0.72 | 0.54 | 0.36 | X | X* | | | | | | |
| | 398.77 | 4.4 | 13718 | 0.96 | 0.63 | 0.48 | 0.32 | X* | X* | | | | | | |
| | **539.10** | 3.2 | 13718 | 0.70 | 0.46 | 0.35 | 0.23 | X* | | | | | | | |
| | **691.55** | 2.5 | 13718 | 0.54 | 0.36 | 0.27 | 0.18 | X* | | | | | | | |
| | **873.65** | 2.0 | 13718 | 0.44 | 0.29 | 0.22 | 0.14 | X* | | | | | | | |
| | **1149.80** | 1.5 | 13718 | 0.33 | 0.22 | 0.16 | 0.11 | X* | | | | | | | |
| | **1361.37** | 1.3 | 13718 | 0.28 | 0.19 | 0.14 | 0.09 | X* | | | | | | | |
| | **1822.00** | 0.96 | 13718 | 0.21 | 0.14 | 0.10 | 0.07 | X* | | | | | | | |
| | **2428.14** | 0.72 | 13718 | 0.16 | 0.10 | 0.08 | 0.05 | X* | | | | | | | |
| | **3635.95** | 0.48 | 13718 | 0.10 | 0.07 | 0.05 | 0.03 | X* | | | | | | | |

* Caution - The motor power may exceed the gear unit's mechanical torque capacity
◈ The mechanical power limit of the solid input shaft type "W" may limit the reducer rating.
All ratings are mechanical. See page 14 for thermal considerations.

| lb | W | 56C | 140TC | 180TC | 210TC |
|---|---|---|---|---|---|
| **SK 9032.1** | 150 | 154 | 154 | 163 | 183 |
| **SK 9033.1** | 154 | 165 | 165 | - | - |


Send Quote Requests to info@automatedpt.com
Call +1(800)985-6929 To Order or Order Online At Nordgearmotors.com

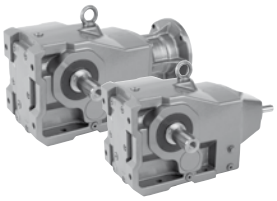



# SK 9042.1, SK 9043.1 NEMA-C + W Ratings & Combinations

| Model Type | Gear Ratio $i_{tot}$ | Output Speed $n_2$ 1750 rpm [rpm] | Output Torque* $T_{2\,max}$ [lb-in] | Maximum input power◈ Solid input shafts type "W" Input Speed 1750 rpm [hp] | 1150 rpm [hp] | 875 rpm [hp] | 580 rpm [hp] | NEMA C-Face* Available Combinations 56C | 140TC | 180TC | 210TC | 250TC | 280TC | 320TC | 360TC |
|---|---|---|---|---|---|---|---|---|---|---|---|---|---|---|---|
| **SK 9042.1** | 8.83 | 198 | 12390 | 20.00 | 13.20 | 10.00 | 6.60 | | | X | X | X | | | |
| | 9.39 | 186 | 13275 | 20.00 | 13.20 | 10.00 | 6.60 | | | X | X | X | X* | | |
| | 10.21 | 171 | 13275 | 20.00 | 13.20 | 10.00 | 6.60 | | | X | X | X | | | |
| | 11.40 | 154 | 13275 | 20.00 | 13.20 | 10.00 | 6.60 | X | X | X | X | X | X* | | |
| | 13.40 | 131 | 17700 | 20.00 | 13.20 | 10.00 | 6.60 | X | X | X | X | X | X* | | |
| | 15.66 | 112 | 17700 | 20.00 | 13.20 | 10.00 | 6.60 | X | X | X | X | X | X* | | |
| | 18.20 | 96 | 21683 | 20.00 | 13.20 | 10.00 | 6.60 | | | X | X | X | | | |
| | 20.32 | 86 | 23010 | 20.00 | 13.20 | 10.00 | 6.60 | X | X | X | X | X | X* | | |
| | 23.89 | 73 | 23895 | 20.00 | 13.20 | 10.00 | 6.60 | X | X | X | X | X | X* | | |
| | 27.91 | 63 | 24780 | 20.00 | 13.20 | 10.00 | 6.60 | X | X | X | X | X | X* | | |
| | 31.70 | 55 | 24780 | 20.00 | 13.20 | 10.00 | 6.60 | X | X | X | X | | | | |
| | 34.39 | 51 | 24780 | 20.00 | 13.20 | 10.00 | 6.60 | X | X | X | X | X* | | | |
| | 40.54 | 43 | 24780 | 16.91 | 11.16 | 8.45 | 5.58 | X | X | X | X | X* | X* | | |
| | 47.67 | 37 | 24780 | 14.55 | 9.60 | 7.27 | 4.80 | X | X | X | X | X* | X* | | |
| | 55.69 | 31 | 24780 | 12.19 | 8.04 | 6.09 | 4.02 | X | X | X | X | X* | X* | | |
| | 63.25 | 28 | 24780 | 11.01 | 7.27 | 5.50 | 3.63 | X | X | X | X | | | | |
| | 68.61 | 26 | 24780 | 10.22 | 6.75 | 5.11 | 3.37 | X | X | X | X | X* | | | |
| | 76.18 | 23 | 24780 | 9.04 | 5.97 | 4.52 | 2.98 | X | X | X | X* | | | | |
| | 86.43 | 20 | 24780 | 7.86 | 5.19 | 3.93 | 2.59 | X | X | X | X* | | | | |
| | 95.56 | 18 | 24780 | 7.08 | 4.67 | 3.54 | 2.34 | X | X | X | X* | | | | |
| | **117.79** | 15 | 21240 | 5.06 | 3.34 | 2.53 | 1.67 | X | X | X* | | | | | |
| | **132.79** | 13 | 24780 | 5.11 | 3.37 | 2.56 | 1.69 | | | X | X* | | | | |
| | **159.94** | 11 | 24780 | 4.32 | 2.85 | 2.16 | 1.43 | | | X* | X* | | | | |
| | **165.24** | 11 | 13275 | 2.32 | 1.53 | 1.16 | 0.76 | X | X | | | | | | |
| | **195.12** | 9.0 | 24780 | 3.54 | 2.34 | 1.77 | 1.17 | X | X | X* | | | | | |
| | **235.01** | 7.4 | 24780 | 2.91 | 1.92 | 1.45 | 0.96 | X | X | X* | | | | | |
| | **273.73** | 6.4 | 24780 | 2.52 | 1.66 | 1.26 | 0.83 | X | X | | | | | | |
| | **329.69** | 5.3 | 24780 | 2.08 | 1.38 | 1.04 | 0.69 | X | X | | | | | | |
| **SK 9043.1** | 172.08 | 10 | 24780 | 3.00 | 1.98 | 1.50 | 0.99 | X | X | X* | | | | | |
| | 204.38 | 8.6 | 24780 | 3.00 | 1.98 | 1.50 | 0.99 | X | X | X* | | | | | |
| | 279.60 | 6.3 | 24780 | 2.48 | 1.63 | 1.24 | 0.82 | X | X | X* | | | | | |
| | 350.72 | 5.0 | 24780 | 1.97 | 1.30 | 0.98 | 0.65 | X | X* | X* | | | | | |
| | **404.82** | 4.3 | 24780 | 1.69 | 1.12 | 0.85 | 0.56 | X | X* | X* | | | | | |
| | **568.04** | 3.1 | 24780 | 1.22 | 0.80 | 0.61 | 0.40 | X | X* | | | | | | |
| | **645.18** | 2.7 | 24780 | 1.06 | 0.70 | 0.53 | 0.35 | X | X* | | | | | | |
| | **881.60** | 2.0 | 24780 | 0.79 | 0.52 | 0.39 | 0.26 | X* | X* | | | | | | |
| | **1113.24** | 1.6 | 24780 | 0.63 | 0.42 | 0.31 | 0.21 | X* | X* | | | | | | |
| | **1517.17** | 1.2 | 24780 | 0.47 | 0.31 | 0.24 | 0.16 | X* | X* | | | | | | |
| | **2128.35** | 0.82 | 24780 | 0.32 | 0.21 | 0.16 | 0.11 | X* | X* | | | | | | |
| | **2397.14** | 0.73 | 24780 | 0.29 | 0.19 | 0.14 | 0.09 | X* | X* | | | | | | |
| | **3026.98** | 0.58 | 24780 | 0.23 | 0.15 | 0.11 | 0.08 | X* | X* | | | | | | |
| | **3362.82** | 0.52 | 24780 | 0.20 | 0.13 | 0.10 | 0.07 | X* | X* | | | | | | |
| | **4246.38** | 0.41 | 24780 | 0.16 | 0.11 | 0.08 | 0.05 | X* | X* | | | | | | |

* Caution - The motor power may exceed the gear unit's mechanical torque capacity
◈ The mechanical power limit of the solid input shaft type "W" may limit the reducer rating.
All ratings are mechanical. See page 14 for thermal considerations.

| lb | W | 56C | 140TC | 180TC | 210TC | 250TC |
|---|---|---|---|---|---|---|
| **SK 9042.1** | 276 | 265 | 265 | 280 | 311 | 333 |
| **SK 9043.1** | 287 | 291 | 291 | 300 | - | - |


Send Quote Requests to info@automatedpt.com
Call +1(800)985-6929 To Order or Order Online At Nordgearmotors.com

# SK 9052.1, SK 9053.1
# NEMA-C + W
# Ratings & Combinations

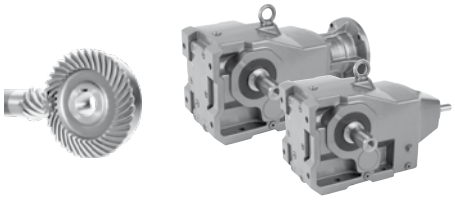



| Model Type | Gear Ratio $i_{tot}$ | Output Speed $n_2$ 1750 rpm [rpm] | Output Torque* $T_{2\,max}$ [lb-in] | Maximum input power◈ Solid input shafts type "W" Input Speed 1750 rpm [hp] | 1150 rpm [hp] | 875 rpm [hp] | 580 rpm [hp] | NEMA C-Face* Available Combinations 56C | 140TC | 180TC | 210TC | 250TC | 280TC | 320TC | 360TC |
|---|---|---|---|---|---|---|---|---|---|---|---|---|---|---|---|
| **SK 9052.1** | 8.10 | 216 | 23010 | 30.00 | 19.80 | 15.00 | 9.90 | | | | | X | X | | |
| | 9.40 | 186 | 23010 | 30.00 | 19.80 | 15.00 | 9.90 | | | | | X | X | | |
| | 9.93 | 176 | 24780 | 30.00 | 19.80 | 15.00 | 9.90 | | | | | X | X | | |
| | 10.71 | 163 | 25665 | 30.00 | 19.80 | 15.00 | 9.90 | | | | | X | X | | |
| | 11.88 | 147 | 34515 | 30.00 | 19.80 | 15.00 | 9.90 | | | X | X | X | X | | |
| | 13.45 | 130 | 38055 | 30.00 | 19.80 | 15.00 | 9.90 | | | X | X | X | X | | |
| | 16.33 | 107 | 38055 | 30.00 | 19.80 | 15.00 | 9.90 | X | X | X | X | X | X | | |
| | 17.94 | 98 | 38055 | 30.00 | 19.80 | 15.00 | 9.90 | | | | | X | X | | |
| | 19.91 | 88 | 38055 | 30.00 | 19.80 | 15.00 | 9.90 | | | X | X | X | X | | |
| | 22.53 | 78 | 38055 | 30.00 | 19.80 | 15.00 | 9.90 | | | X | X | X | X | | |
| | 23.33 | 75 | 38055 | 30.00 | 19.80 | 15.00 | 9.90 | X | X | X | X | X | X | | |
| | 27.35 | 64 | 40710 | 30.00 | 19.80 | 15.00 | 9.90 | X | X | X | X | X | X | | |
| | 31.28 | 56 | 42480 | 30.00 | 19.80 | 15.00 | 9.90 | X | X | X | X | X | X | | |
| | 36.21 | 48 | 42480 | 30.00 | 19.80 | 15.00 | 9.90 | X | X | X | X | X | X | | |
| | 39.72 | 44 | 42480 | 29.66 | 19.57 | 14.83 | 9.79 | | | X | X | X | X* | | |
| | 44.96 | 39 | 42480 | 26.29 | 17.35 | 13.14 | 8.67 | | | X | X | X | X* | | |
| | 54.56 | 32 | 42480 | 21.57 | 14.24 | 10.78 | 7.12 | X | X | X | X | X | X* | | |
| | 62.42 | 28 | 42480 | 18.87 | 12.46 | 9.44 | 6.23 | X | X | X | X | X* | X* | | |
| | 72.24 | 24 | 42480 | 16.18 | 10.68 | 8.09 | 5.34 | X | X | X | X | X* | X* | | |
| | 88.17 | 20 | 42480 | 13.48 | 8.90 | 6.74 | 4.45 | X | X | X | X | X* | | | |
| | 102.40 | 17 | 42480 | 11.46 | 7.56 | 5.73 | 3.78 | X | X | X | X | | | | |
| | 120.03 | 15 | 42480 | 10.11 | 6.67 | 5.06 | 3.34 | X | X | X | X* | | | | |
| | **145.16** | 12 | 31860 | 6.07 | 4.00 | 3.03 | 2.00 | X | X | X | | | | | |
| | **169.24** | 10 | 42480 | 6.74 | 4.45 | 3.37 | 2.22 | | | X | X* | | | | |
| | **198.38** | 8.8 | 42480 | 5.93 | 3.91 | 2.97 | 1.96 | | | X | X* | | | | |
| | **247.06** | 7.1 | 42480 | 4.79 | 3.16 | 2.39 | 1.58 | X | X | X* | | | | | |
| | **289.61** | 6.0 | 42480 | 4.04 | 2.67 | 2.02 | 1.33 | X | X | X* | | | | | |
| **SK 9053.1** | 164.99 | 11 | 42480 | 5.00 | 3.30 | 2.50 | 1.65 | X | X | X | X* | | | | |
| | 229.07 | 7.6 | 42480 | 5.00 | 3.30 | 2.50 | 1.65 | X | X | X | X* | | | | |
| | 265.11 | 6.6 | 42480 | 4.45 | 2.94 | 2.22 | 1.47 | X | X | X* | X* | | | | |
| | 348.91 | 5.0 | 42480 | 3.37 | 2.22 | 1.69 | 1.11 | X | X | X* | | | | | |
| | **458.57** | 3.8 | 42480 | 2.56 | 1.69 | 1.28 | 0.85 | X | X | | | | | | |
| | **579.95** | 3.0 | 42480 | 2.02 | 1.33 | 1.01 | 0.67 | X | X* | | | | | | |
| | **703.83** | 2.5 | 35400 | 1.40 | 0.93 | 0.70 | 0.46 | X | X* | | | | | | |
| | **931.87** | 1.9 | 42480 | 1.28 | 0.85 | 0.64 | 0.42 | X | X* | | | | | | |
| | 1062.85 | 1.6 | 42480 | 1.08 | 0.71 | 0.54 | 0.36 | X | X* | X* | X* | | | | |
| | 1398.80 | 1.3 | 42480 | 0.88 | 0.58 | 0.44 | 0.29 | X* | X* | X* | | | | | |
| | **1872.50** | 0.93 | 42480 | 0.63 | 0.41 | 0.31 | 0.21 | X* | X* | | | | | | |
| | **2023.49** | 0.86 | 42480 | 0.58 | 0.38 | 0.29 | 0.19 | X* | X* | | | | | | |
| | **2953.98** | 0.59 | 42480 | 0.40 | 0.26 | 0.20 | 0.13 | X* | X* | | | | | | |
| | **3735.92** | 0.47 | 42480 | 0.32 | 0.21 | 0.16 | 0.10 | X* | X* | | | | | | |

* Caution - The motor power may exceed the gear unit's mechanical torque capacity
◈ The mechanical power limit of the solid input shaft type "W" may limit the reducer rating.
All ratings are mechanical. See page 14 for thermal considerations.

| lb | W | 56C | 140TC | 180TC | 210TC | 250TC | 280TC |
|---|---|---|---|---|---|---|---|
| **SK 9052.1** | 441 | 430 | 430 | 445 | 476 | 498 | 498 |
| **SK 9053.1** | 459 | 463 | 463 | 472 | - | - | - |


Send Quote Requests to info@automatedpt.com
Call +1(800)985-6929 To Order or Order Online At Nordgearmotors.com

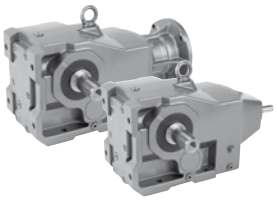



# SK 9072.1, SK 9072.1/32/42 NEMA-C + W Ratings & Combinations

| Model Type | Gear Ratio | Output Speed | Output Torque* | Maximum input power◈ Solid input shafts type "W" | | | | NEMA C-Face* Available Combinations | | | | | | | |
|---|---|---|---|---|---|---|---|---|---|---|---|---|---|---|---|
| | | | | Input Speed | | | | | | | | | | | |
| | $i_{tot}$ | $n_2$ 1750 rpm | $T_{2\,max}$ | 1750 rpm | 1150 rpm | 875 rpm | 580 rpm | | | | | | | | |
| | | [rpm] | [lb-in] | [hp] | [hp] | [hp] | [hp] | 56C | 140TC | 180TC | 210TC | 250TC | 280TC | 320TC | 360TC |
| **SK 9072.1** | 9.16 | 191 | 41595 | 60.00 | 39.60 | 30.00 | 19.80 | | | | | X | X | X | X* |
| | 10.19 | 172 | 41595 | 60.00 | 39.60 | 30.00 | 19.80 | | | X | X | X | X | X | X* |
| | 11.48 | 152 | 44250 | 60.00 | 39.60 | 30.00 | 19.80 | | | X | X | X | X | X | X* |
| | 12.06 | 145 | 44250 | 60.00 | 39.60 | 30.00 | 19.80 | | | X | X | X | X | X | X* |
| | 12.51 | 140 | 44250 | 60.00 | 39.60 | 30.00 | 19.80 | | | | | X | X | X | X* |
| | 14.06 | 124 | 46020 | 60.00 | 39.60 | 30.00 | 19.80 | | | X | X | X | X | X | X* |
| | 15.40 | 114 | 66375 | 60.00 | 39.60 | 30.00 | 19.80 | | | X | X | X | X | X | X* |
| | 16.44 | 106 | 66375 | 60.00 | 39.60 | 30.00 | 19.80 | | | | | X | X | X | X* |
| | 18.29 | 96 | 69030 | 60.00 | 39.60 | 30.00 | 19.80 | | | X | X | X | X | X | X* |
| | 20.61 | 85 | 75225 | 60.00 | 39.60 | 30.00 | 19.80 | | | X | X | X | X | X | X* |
| | 22.46 | 78 | 75225 | 60.00 | 39.60 | 30.00 | 19.80 | | | | | | X | X | X* |
| | 25.24 | 69 | 75225 | 60.00 | 39.60 | 30.00 | 19.80 | | | X | X | X | X | X | X* |
| | 29.29 | 60 | 75225 | 60.00 | 39.60 | 30.00 | 19.80 | | | X | X | X | X | X | X* |
| | 35.19 | 50 | 75225 | 59.68 | 39.39 | 29.84 | 19.69 | | | X | X | X | X | X | X* |
| | 41.11 | 43 | 68145 | 46.49 | 30.69 | 23.25 | 15.34 | | | X | X | X | X | X* | X* |
| | 44.81 | 39 | 68145 | 42.17 | 27.83 | 21.08 | 13.92 | | | | | X | X | X* | X* |
| | 50.35 | 35 | 72570 | 40.30 | 26.60 | 20.15 | 13.30 | | | X | X | X | X | X* | X* |
| | 58.44 | 30 | 75225 | 35.81 | 23.63 | 17.90 | 11.82 | | | X | X | X | X | X* | X* |
| | 70.22 | 25 | 75225 | 29.84 | 19.69 | 14.92 | 9.85 | | | X | X | X | X* | X* | X* |
| | 79.69 | 22 | 75225 | 26.26 | 17.33 | 13.13 | 8.67 | | | X | X | X | X* | | |
| | 91.47 | 19 | 75225 | 22.68 | 14.97 | 11.34 | 7.48 | | | X | X | X | X* | | |
| | 110.18 | 16 | 75225 | 19.10 | 12.60 | 9.55 | 6.30 | | | X | X | | | | |
| | **136.88** | 13 | 59295 | 12.23 | 8.07 | 6.12 | 4.04 | | | X | X | | | | |
| | **157.27** | 11 | 75225 | 13.13 | 8.67 | 6.56 | 4.33 | | | X | X | X* | X* | | |
| | **186.86** | 9.4 | 75225 | 11.22 | 7.40 | 5.61 | 3.70 | | | X | X | X* | X* | | |
| | **206.84** | 8.5 | 75225 | 10.15 | 6.70 | 5.07 | 3.35 | | | X | X | | | | |
| | **245.76** | 7.1 | 75225 | 8.47 | 5.59 | 4.24 | 2.80 | | | X | X* | | | | |
| **SK 9072.1/32** | 311.10 | 5.6 | 75225 | 5.00 | 3.30 | 2.50 | 1.65 | X | X | X | X* | | | | |
| | 385.88 | 4.5 | 75225 | 5.00 | 3.30 | 2.50 | 1.65 | X | X | X | X* | | | | |
| | **473.22** | 3.7 | 75225 | 4.42 | 2.91 | 2.21 | 1.46 | X | X | X* | X* | | | | |
| | **598.27** | 2.9 | 75225 | 3.46 | 2.28 | 1.73 | 1.14 | X | X | X* | X* | | | | |
| | **767.55** | 2.3 | 75225 | 2.75 | 1.81 | 1.37 | 0.91 | X | X | X* | X* | | | | |
| | **973.69** | 1.8 | 75225 | 2.15 | 1.42 | 1.07 | 0.71 | X | X | X* | X* | | | | |
| | **1169.97** | 1.5 | 75225 | 1.79 | 1.18 | 0.90 | 0.59 | X | X* | X* | X* | | | | |
| | **1453.44** | 1.2 | 75225 | 1.43 | 0.95 | 0.72 | 0.47 | X | X* | X* | X* | | | | |
| | **1912.84** | 0.91 | 75225 | 1.09 | 0.72 | 0.54 | 0.36 | X | X* | X* | | | | | |
| | **2320.58** | 0.75 | 75225 | 0.95 | 0.63 | 0.47 | 0.31 | X* | X* | | | | | | |
| | **3251.68** | 0.54 | 75225 | 0.70 | 0.46 | 0.35 | 0.23 | X* | X* | | | | | | |
| | **4039.53** | 0.43 | 75225 | 0.57 | 0.37 | 0.28 | 0.19 | X* | X* | | | | | | |
| | **4512.24** | 0.39 | 75225 | 0.52 | 0.34 | 0.26 | 0.17 | X* | X* | | | | | | |
| **SK 9072.1/42** | 134.14 | 13 | 54870 | 10.00 | 6.60 | 5.00 | 3.30 | X | X | X | X* | X* | X* | | |
| | 156.70 | 11 | 56640 | 9.89 | 6.52 | 4.94 | 3.26 | X | X | X | X* | X* | X* | | |
| | 196.12 | 8.9 | 65490 | 9.25 | 6.10 | 4.62 | 3.05 | X | X | X | X* | X* | X* | | |
| | 269.39 | 6.5 | 75225 | 7.76 | 5.12 | 3.88 | 2.56 | X | X | X | X* | X* | X* | | |

* Caution - The motor power may exceed the gear unit's mechanical torque capacity
◈ The mechanical power limit of the solid input shaft type "W" may limit the reducer rating.
All ratings are mechanical. See page 14 for thermal considerations.

| lb | W | 56C | 140TC | 180TC | 210TC | 250TC | 280TC | 320TC | 360TC |
|---|---|---|---|---|---|---|---|---|---|
| **SK 9072.1** | 794 | - | - | 767 | 796 | 851 | 851 | 851 | 882 |
| **SK 9072.1/32** | 803 | 807 | 807 | 816 | 836 | - | - | - | - |
| **SK 9072.1/42** | 862 | 851 | 851 | 867 | 897 | 919 | 919 | - | - |


Send Quote Requests to info@automatedpt.com
Call +1(800)985-6929 To Order or Order Online At Nordgearmotors.com

Send Quote Requests to info@automatedpt.com Call +1(800)985-6929 To Order or Order Online At Nordgearmotors.com

# SK 9082.1, SK 9082.1/42/52 NEMA-C + W Ratings & Combinations

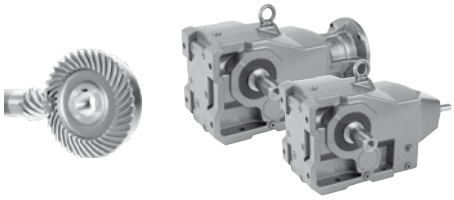



| Model Type | Gear Ratio $i_{tot}$ | Output Speed $n_2$ 1750 rpm [rpm] | Output Torque* $T_{2\,max}$ [lb-in] | Maximum input power◈ Solid input shafts type "W" Input Speed 1750 rpm [hp] | 1150 rpm [hp] | 875 rpm [hp] | 580 rpm [hp] | NEMA C-Face* Available Combinations 56C | 140TC | 180TC | 210TC | 250TC | 280TC | 320TC | 360TC |
|---|---|---|---|---|---|---|---|---|---|---|---|---|---|---|---|
| **SK 9082.1** | 8.04 | 218 | 63720 | 125.00 | 82.50 | 62.50 | 41.25 | | | X | X | X | X | X | X |
| | 12.31 | 142 | 74340 | 125.00 | 82.50 | 62.50 | 41.25 | | | X | X | X | X | X | X |
| | 14.61 | 120 | 115050 | 125.00 | 82.50 | 62.50 | 41.25 | | | X | X | X | X | X | X |
| | 17.35 | 101 | 115050 | 125.00 | 82.50 | 62.50 | 41.25 | | | | | | X | X | X |
| | 20.16 | 87 | 115050 | 125.00 | 82.50 | 62.50 | 41.25 | | | | | | | X | X |
| | 22.37 | 78 | 115050 | 125.00 | 82.50 | 62.50 | 41.25 | | | X | X | X | X | X | X |
| | 26.71 | 66 | 115050 | 120.48 | 79.52 | 60.24 | 39.76 | | | X | X | X | X | X | X |
| | 31.27 | 56 | 115050 | 102.23 | 67.47 | 51.11 | 33.73 | | | X | X | X | X | X | X |
| | 35.83 | 49 | 115050 | 89.45 | 59.04 | 44.72 | 29.52 | | | X | X | X | X | X | X |
| | 41.54 | 42 | 115050 | 76.67 | 50.60 | 38.33 | 25.30 | | | X | X | X | X | X | X |
| | 44.63 | 39 | 115050 | 71.19 | 46.99 | 35.60 | 23.49 | | | X | X | X | X | X | X* |
| | 53.28 | 33 | 115050 | 60.24 | 39.76 | 30.12 | 19.88 | | | X | X | X | X | X | X* |
| | 62.39 | 28 | 115050 | 51.11 | 33.73 | 25.56 | 16.87 | | | X | X | X | X | X | X* |
| | 71.50 | 24 | 115050 | 43.81 | 28.92 | 21.91 | 14.46 | | | X | X | X | X | X* | X* |
| | 82.88 | 21 | 115050 | 38.33 | 25.30 | 19.17 | 12.65 | | | X | X | X | X | X* | X* |
| | 95.86 | 18 | 115050 | 32.86 | 21.69 | 16.43 | 10.84 | | | X | X | X | X | X* | X* |
| | 116.45 | 15 | 115050 | 27.38 | 18.07 | 13.69 | 9.04 | | | X | X | X | X* | X* | X* |
| | **122.46** | 14 | 115050 | 25.56 | 16.87 | 12.78 | 8.43 | | | X | X | X | X* | | |
| | **148.76** | 12 | 115050 | 21.91 | 14.46 | 10.95 | 7.23 | | | X | X | X | X* | | |
| | **244.32** | 7.2 | 115050 | 13.14 | 8.67 | 6.57 | 4.34 | | | X | X | X* | X* | | |
| | **296.80** | 5.9 | 111510 | 10.44 | 6.89 | 5.22 | 3.44 | | | X | X | X* | X* | | |
| **SK 9082.1/42** | 285.05 | 6.1 | 115050 | 10.00 | 6.60 | 5.00 | 3.30 | X | X | X | X | X* | X* | | |
| | 379.59 | 4.6 | 115050 | 8.40 | 5.54 | 4.20 | 2.77 | X | X | X | X* | X* | X* | | |
| | 443.41 | 3.9 | 115050 | 7.12 | 4.70 | 3.56 | 2.35 | X | X | X | X* | X* | X* | | |
| | 603.37 | 2.9 | 115050 | 5.29 | 3.49 | 2.65 | 1.75 | X | X | X | X* | X* | X* | | |
| | 704.48 | 2.5 | 115050 | 4.56 | 3.01 | 2.28 | 1.51 | X | X | X* | X* | X* | X* | | |
| | 845.38 | 2.1 | 115050 | 3.83 | 2.53 | 1.92 | 1.27 | X | X | X* | X* | X* | X* | | |
| | 1017.77 | 1.7 | 115050 | 3.10 | 2.05 | 1.55 | 1.02 | X | X | X* | X* | X* | X* | | |
| | 1467.80 | 1.2 | 115050 | 2.19 | 1.45 | 1.10 | 0.72 | X | X | X* | X* | X* | | | |
| | 1812.59 | 0.97 | 115050 | 1.77 | 1.17 | 0.89 | 0.58 | X | X* | X* | X* | X* | | | |
| | 2044.65 | 0.86 | 115050 | 1.57 | 1.04 | 0.78 | 0.52 | X | X* | X* | X* | | | | |
| | **2682.59** | 0.65 | 115050 | 1.19 | 0.78 | 0.59 | 0.39 | X | X* | X* | | | | | |
| | **3341.45** | 0.52 | 115050 | 1.00 | 0.66 | 0.50 | 0.33 | X* | X* | X* | | | | | |
| | **4671.14** | 0.37 | 115050 | 0.73 | 0.48 | 0.36 | 0.24 | X* | X* | X* | | | | | |
| **SK 9082.1/52** | 123.13 | 14 | 106200 | 20.00 | 13.20 | 10.00 | 6.60 | | | X | X | X | X* | | |
| | 146.19 | 12 | 115050 | 20.00 | 13.20 | 10.00 | 6.60 | | | X | X | X | X* | | |
| | 182.09 | 9.6 | 115050 | 17.52 | 11.57 | 8.76 | 5.78 | | | X | X | X* | X* | | |
| | 245.62 | 7.1 | 115050 | 12.96 | 8.55 | 6.48 | 4.28 | | | X | X | X* | X* | | |

* Caution - The motor power may exceed the gear unit's mechanical torque capacity
◈ The mechanical power limit of the solid input shaft type "W" may limit the reducer rating.
All ratings are mechanical. See page 14 for thermal considerations.

| lb | W | 56C | 140TC | 180TC | 210TC | 250TC | 280TC | 320TC | 360TC |
|---|---|---|---|---|---|---|---|---|---|
| **SK 9082.1** | 1532 | - | - | 1338 | 1369 | 1424 | 1424 | 1455 | 1488 |
| **SK 9082.1/42** | 1435 | 1424 | 1424 | 1440 | 1471 | 1493 | - | - | - |
| **SK 9082.1/52** | 1491 | - | - | 1495 | 1526 | 1548 | 1548 | - | - |


Send Quote Requests to info@automatedpt.com
Call +1(800)985-6929 To Order or Order Online At Nordgearmotors.com

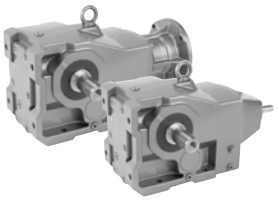



# SK 9086.1, SK 9086.1/52 NEMA-C + W Ratings & Combinations

| Model Type | Gear Ratio $i_{tot}$ | Output Speed $n_2$ 1750 rpm [rpm] | Output Torque* $T_{2\,max}$ [lb-in] | Maximum input power◈ Solid input shafts type "W" Input Speed 1750 rpm [hp] | 1150 rpm [hp] | 875 rpm [hp] | 580 rpm [hp] | NEMA C-Face* Available Combinations 56C | 140TC | 180TC | 210TC | 250TC | 280TC | 320TC | 360TC |
|---|---|---|---|---|---|---|---|---|---|---|---|---|---|---|---|
| **SK 9086.1** | 8.04 | 218 | 106200 | 200.00 | 132.00 | 100.00 | 66.00 | | | X | X | X | X | X | X |
| | 9.55 | 183 | 115050 | 200.00 | 132.00 | 100.00 | 66.00 | | | | | | X | X | X |
| | 11.60 | 151 | 150450 | 200.00 | 132.00 | 100.00 | 66.00 | | | X | X | X | X | X | X |
| | 12.31 | 142 | 123900 | 200.00 | 132.00 | 100.00 | 66.00 | | | X | X | X | X | X | X |
| | 14.70 | 119 | 132750 | 200.00 | 132.00 | 100.00 | 66.00 | | | X | X | X | X | X | X |
| | 16.38 | 107 | 168150 | 200.00 | 132.00 | 100.00 | 66.00 | | | | | | X | X | X |
| | 17.77 | 98 | 168150 | 200.00 | 132.00 | 100.00 | 66.00 | | | X | X | X | X | X | X |
| | 21.12 | 83 | 177000 | 200.00 | 132.00 | 100.00 | 66.00 | | | X | X | X | X | X | X |
| | 25.21 | 69 | 177000 | 193.78 | 127.90 | 96.89 | 63.95 | | | X | X | X | X | X | X |
| | 29.52 | 59 | 177000 | 165.70 | 109.36 | 82.85 | 54.68 | | | X | X | X | X | X | X |
| | 35.44 | 49 | 159300 | 123.85 | 81.74 | 61.93 | 40.87 | | | X | X | X | X | X | X |
| | 42.13 | 42 | 177000 | 117.95 | 77.85 | 58.98 | 38.92 | | | X | X | X | X | X | X |
| | 50.30 | 35 | 177000 | 98.29 | 64.87 | 49.15 | 32.44 | | | X | X | X | X | X | X |
| | 58.90 | 30 | 177000 | 84.25 | 55.61 | 42.13 | 27.80 | | | X | X | X | X | X | X |
| | 67.50 | 26 | 177000 | 73.02 | 48.19 | 36.51 | 24.10 | | | X | X | X | X | X | X* |
| | 78.24 | 22 | 177000 | 61.76 | 40.76 | 30.88 | 20.38 | | | X | X | X | X | X | X* |
| | 90.50 | 19 | 177000 | 53.36 | 35.22 | 26.68 | 17.61 | | | X | X | X | X | X | |
| | 116.50 | 15 | 177000 | 42.13 | 27.80 | 21.06 | 13.90 | | | X | X | X | X | | |
| | **127.67** | 14 | 177000 | 39.32 | 25.95 | 19.66 | 12.97 | | | | | X | X | X* | |
| | **151.76** | 12 | 177000 | 33.70 | 22.24 | 16.85 | 11.12 | | | | | X | X | X* | |
| | **194.04** | 9.0 | 177000 | 25.28 | 16.68 | 12.64 | 8.34 | | | X | X | X | X* | | |
| | **230.64** | 7.6 | 177000 | 21.34 | 14.09 | 10.67 | 7.04 | | | X | X | X | X* | | |
| **SK 9086.1/52** | 144.60 | 12 | 159300 | 30.00 | 19.80 | 15.00 | 9.90 | | | X | X | X | X | | |
| | 171.89 | 10 | 177000 | 28.08 | 18.54 | 14.04 | 9.27 | | | X | X | X | X* | | |
| | 235.93 | 7.4 | 177000 | 20.78 | 13.72 | 10.39 | 6.86 | X | X | X | X | X | X* | | |
| | 270.47 | 6.5 | 177000 | 18.25 | 12.05 | 9.13 | 6.02 | | | X | X | X* | X* | | |
| | 378.14 | 4.6 | 177000 | 12.92 | 8.53 | 6.46 | 4.26 | | | X | X | X* | X* | | |
| | 433.35 | 4.0 | 177000 | 11.23 | 7.41 | 5.62 | 3.71 | | | X | X | X* | X* | | |
| | 623.16 | 2.8 | 177000 | 7.86 | 5.19 | 3.93 | 2.59 | X | X | X | X* | X* | X* | | |
| | 714.15 | 2.5 | 177000 | 7.02 | 4.63 | 3.51 | 2.32 | X | X | X | X* | X* | X* | | |
| | 907.88 | 1.9 | 177000 | 5.34 | 3.52 | 2.67 | 1.76 | X | X | X | X* | X* | X* | | |
| | 1202.18 | 1.5 | 177000 | 4.21 | 2.78 | 2.11 | 1.39 | X | X | X* | X* | X* | X* | | |
| | 1463.40 | 1.2 | 177000 | 3.37 | 2.22 | 1.69 | 1.11 | X | X | X* | X* | X* | X* | | |
| | 1786.05 | 0.98 | 177000 | 2.75 | 1.82 | 1.38 | 0.91 | X | X | X* | X* | X* | | | |
| | **2107.43** | 0.83 | 177000 | 2.33 | 1.54 | 1.17 | 0.77 | X | X | X* | | | | | |
| | **3007.66** | 0.58 | 177000 | 1.63 | 1.08 | 0.81 | 0.54 | X | X* | X* | | | | | |
| | **3590.92** | 0.49 | 177000 | 1.38 | 0.91 | 0.69 | 0.45 | X | X* | X* | | | | | |
| | **4818.83** | 0.36 | 177000 | 1.01 | 0.67 | 0.51 | 0.33 | X | X* | X* | | | | | |

W + NEMA

* Caution - The motor power may exceed the gear unit's mechanical torque capacity
◈ The mechanical power limit of the solid input shaft type "W" may limit the reducer rating.
All ratings are mechanical. See page 14 for thermal considerations.

| lb | W | 56C | 140TC | 180TC | 210TC | 250TC | 280TC | 320TC | 360TC |
|---|---|---|---|---|---|---|---|---|---|
| **SK 9086.1** | 2084 | - | - | 1890 | 1921 | 1976 | 1976 | 2007 | 2040 |
| **SK 9086.1/52** | 2042 | 2031 | 2031 | 2046 | 2077 | 2099 | 2099 | - | - |


Send Quote Requests to info@automatedpt.com
Call +1(800)985-6929 To Order or Order Online At Nordgearmotors.com

# SK 9092.1, SK 9092.1/52
# NEMA-C + W
# Ratings & Combinations

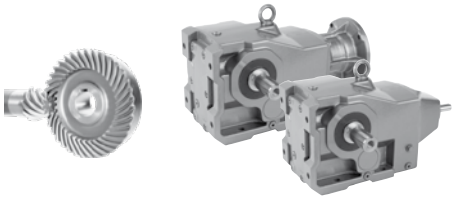



| Model Type | Gear Ratio | Output Speed | Output Torque* | Maximum input power◈ Solid input shafts type "W" | | | | NEMA C-Face* Available Combinations | | | | | | | |
|---|---|---|---|---|---|---|---|---|---|---|---|---|---|---|---|
| | | | | Input Speed | | | | | | | | | | | |
| | $i_{tot}$ | $n_2$ 1750 rpm | $T_{2\,max}$ | 1750 rpm | 1150 rpm | 875 rpm | 580 rpm | | | | | | | | |
| | | [rpm] | [lb-in] | [hp] | [hp] | [hp] | [hp] | 56C | 140TC | 180TC | 210TC | 250TC | 280TC | 320TC | 360TC |
| **SK 9092.1** | 10.68 | 164 | 159300 | 200.00 | 132.00 | 100.00 | 66.00 | | | | | | | | X |
| | 11.55 | 152 | 162840 | 200.00 | 132.00 | 100.00 | 66.00 | | | | X | X | X | X | X |
| | 14.10 | 124 | 171690 | 200.00 | 132.00 | 100.00 | 66.00 | | | | X | X | X | X | X |
| | 17.26 | 101 | 181425 | 200.00 | 132.00 | 100.00 | 66.00 | | | | X | X | X | X | X |
| | 20.38 | 86 | 283200 | 200.00 | 132.00 | 100.00 | 66.00 | | | | X | X | X | X | X |
| | 24.94 | 70 | 283200 | 200.00 | 132.00 | 100.00 | 66.00 | | | | X | X | X | X | X |
| | 29.28 | 60 | 283200 | 200.00 | 132.00 | 100.00 | 66.00 | | | | X | X | X | X | X |
| | 34.15 | 51 | 283200 | 200.00 | 132.00 | 100.00 | 66.00 | | | | X | X | X | X | X |
| | 39.10 | 45 | 283200 | 200.00 | 132.00 | 100.00 | 66.00 | | | | X | X | X | X | X |
| | 40.65 | 43 | 283200 | 193.22 | 127.52 | 96.61 | 63.76 | | | | X | X | X | X | X |
| | 49.75 | 35 | 283200 | 157.27 | 103.80 | 78.64 | 51.90 | | | | X | X | X | X | X |
| | 58.66 | 30 | 283200 | 134.80 | 88.97 | 67.40 | 44.49 | | | | X | X | X | X | X |
| | 68.87 | 25 | 283200 | 112.34 | 74.14 | 56.17 | 37.07 | | | | X | X | X | X | X |
| | 80.00 | 22 | 283200 | 98.86 | 65.25 | 49.43 | 32.62 | | | | X | X | X | X | X |
| | 91.60 | 19 | 283200 | 85.38 | 56.35 | 42.69 | 28.17 | | | | X | X | X | X | X |
| | 102.28 | 17 | 283200 | 76.39 | 50.42 | 38.19 | 25.21 | | | | X | X | X | X | |
| | 120.23 | 15 | 283200 | 67.40 | 44.49 | 33.70 | 22.24 | | | | X | X | X | X | |
| | 152.96 | 11 | 283200 | 49.43 | 32.62 | 24.71 | 16.31 | | | | X | X | X | | |
| | **197.51** | 8.9 | 283200 | 39.99 | 26.39 | 20.00 | 13.20 | | | | | X | X | | |
| | **253.40** | 6.9 | 283200 | 31.00 | 20.46 | 15.50 | 10.23 | | | | X | X | X | | |
| | **297.51** | 5.9 | 283200 | 26.51 | 17.50 | 13.26 | 8.75 | | | | X | X | X* | | |
| **SK 9092.1/52** | 191.28 | 9.1 | 283200 | 30.00 | 19.80 | 15.00 | 9.90 | | | | | X | X | | |
| | 222.14 | 7.9 | 283200 | 30.00 | 19.80 | 15.00 | 9.90 | | | | | X | X | | |
| | 280.76 | 6.2 | 283200 | 27.86 | 18.39 | 13.93 | 9.19 | | | X | X | X | X* | | |
| | 385.67 | 4.5 | 283200 | 20.22 | 13.35 | 10.11 | 6.67 | X | X | X | X | X | X* | | |
| | 441.46 | 4.0 | 283200 | 17.97 | 11.86 | 8.99 | 5.93 | X | X | X | X | X* | X* | | |
| | 608.12 | 2.9 | 283200 | 13.03 | 8.60 | 6.52 | 4.30 | X | X | X | X | X* | X* | | |
| | 706.40 | 2.5 | 283200 | 11.23 | 7.41 | 5.62 | 3.71 | X | X | X | X | X* | X* | | |
| | 846.40 | 2.1 | 283200 | 9.44 | 6.23 | 4.72 | 3.11 | X | X | X | X* | X* | X* | | |
| | 1120.00 | 1.6 | 283200 | 7.19 | 4.75 | 3.59 | 2.37 | X | X | X | X* | X* | X* | | |
| | 1424.80 | 1.2 | 283200 | 5.39 | 3.56 | 2.70 | 1.78 | X | X | X | X* | X* | X* | | |
| | 1795.36 | 0.97 | 283200 | 4.36 | 2.88 | 2.18 | 1.44 | X | X | X* | X* | X* | X* | | |
| | 2116.80 | 0.83 | 283200 | 3.73 | 2.46 | 1.86 | 1.23 | X | X | X* | X* | X* | | | |
| | **2902.00** | 0.60 | 230100 | 2.19 | 1.45 | 1.10 | 0.72 | X | X | X* | | | | | |
| | **3551.65** | 0.49 | 230100 | 1.79 | 1.18 | 0.89 | 0.59 | X | X* | X* | | | | | |
| | **4916.63** | 0.36 | 283200 | 1.62 | 1.07 | 0.81 | 0.53 | X | X* | X* | | | | | |

* Caution - The motor power may exceed the gear unit's mechanical torque capacity
◈ The mechanical power limit of the solid input shaft type "W" may limit the reducer rating.
All ratings are mechanical. See page 14 for thermal considerations.

| lb | W | 56C | 140TC | 180TC | 210TC | 250TC | 280TC | 320TC | 360TC |
|---|---|---|---|---|---|---|---|---|---|
| **SK 9092.1** | 3341 | - | - | - | 3177 | 3233 | 3233 | 3263 | 3296 |
| **SK 9092.1/52** | 3299 | 3288 | 3288 | 3303 | 3334 | 3356 | 3356 | - | - |


Send Quote Requests to info@automatedpt.com
Call +1(800)985-6929 To Order or Order Online At Nordgearmotors.com

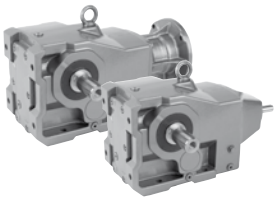



# SK 9096.1, SK 9096.1/62 NEMA-C + W Ratings & Combinations

| Model Type | Gear Ratio $i_{tot}$ | Output Speed $n_2$ 1750 rpm [rpm] | Output Torque* $T_{2\,max}$ [lb-in] | Maximum input power◈ Solid input shafts type "W" Input Speed 1750 rpm [hp] | 1150 rpm [hp] | 875 rpm [hp] | 580 rpm [hp] | NEMA C-Face* Available Combinations 56C | 140TC | 180TC | 210TC | 250TC | 280TC | 320TC | 360TC |
|---|---|---|---|---|---|---|---|---|---|---|---|---|---|---|---|
| **SK 9096.1** | 22.75 | 77 | 442500 | 200.00 | 132.00 | 100.00 | 66.00 | | | | | | | X | X |
| | 26.31 | 67 | 442500 | 200.00 | 132.00 | 100.00 | 66.00 | | | | | | | X | X |
| | 28.47 | 61 | 442500 | 200.00 | 132.00 | 100.00 | 66.00 | | | | | | X | X | X |
| | 32.93 | 53 | 442500 | 200.00 | 132.00 | 100.00 | 66.00 | | | | | | X | X | X |
| | 36.24 | 48 | 442500 | 200.00 | 132.00 | 100.00 | 66.00 | | | | | | X | X | X |
| | 41.32 | 42 | 442500 | 200.00 | 132.00 | 100.00 | 66.00 | | | | X | X | X | X | X |
| | 47.79 | 37 | 442500 | 200.00 | 132.00 | 100.00 | 66.00 | | | | X | X | X | X | X |
| | 56.26 | 31 | 442500 | 200.00 | 132.00 | 100.00 | 66.00 | | | | | | | X | X |
| | 65.07 | 27 | 442500 | 189.57 | 125.12 | 94.78 | 62.56 | | | | | | | X | X |
| | 70.41 | 25 | 442500 | 175.53 | 115.85 | 87.76 | 57.92 | | | | | | X | X | X |
| | 81.43 | 21 | 442500 | 147.44 | 97.31 | 73.72 | 48.66 | | | | | | X | X | X |
| | 89.60 | 20 | 442500 | 140.42 | 92.68 | 70.21 | 46.34 | | | | | | X | X | X |
| | 102.18 | 17 | 442500 | 119.36 | 78.78 | 59.68 | 39.39 | | | | X | X | X | X | X |
| | 118.18 | 15 | 442500 | 105.32 | 69.51 | 52.66 | 34.75 | | | | X | X | X | X | X |
| | 133.53 | 13 | 442500 | 91.27 | 60.24 | 45.64 | 30.12 | | | | X | X | X | X | X |
| | 154.29 | 11 | 442500 | 77.23 | 50.97 | 38.62 | 25.49 | | | | X | X | X | X | X |
| | 173.41 | 10 | 442500 | 70.21 | 46.34 | 35.11 | 23.17 | | | | X | X | X | X | |
| | 200.57 | 8.7 | 442500 | 61.08 | 40.31 | 30.54 | 20.16 | | | | X | X | X | X | |
| **SK 9096.1/62** | 208.95 | 8.4 | 442500 | 58.98 | 38.92 | 29.49 | 19.46 | | | | | X | X | X | X* |
| | 233.51 | 7.5 | 442500 | 52.66 | 34.75 | 26.33 | 17.38 | | | X | X | X | X | X | X* |
| | 270.09 | 6.5 | 442500 | 45.64 | 30.12 | 22.82 | 15.06 | | | X | X | X | X | X* | X* |
| | 297.17 | 5.9 | 442500 | 41.42 | 27.34 | 20.71 | 13.67 | | | X | X | X | X | X* | X* |
| | 320.72 | 5.5 | 442500 | 38.62 | 25.49 | 19.31 | 12.74 | | | X | X | X | X | X* | X* |
| | 370.95 | 4.7 | 442500 | 33.00 | 21.78 | 16.50 | 10.89 | | | X | X | X | X | X* | X* |
| | 431.00 | 4.1 | 442500 | 28.79 | 19.00 | 14.39 | 9.50 | | | X | X | X | X* | X* | X* |
| | 474.22 | 3.7 | 442500 | 25.98 | 17.15 | 12.99 | 8.57 | | | X | X | X | X* | X* | X* |
| | 538.33 | 3.3 | 442500 | 23.17 | 15.29 | 11.58 | 7.65 | | | X | X | X | X* | X* | X* |
| | 607.63 | 2.9 | 442500 | 20.36 | 13.44 | 10.18 | 6.72 | | | X | X | X | X* | X* | X* |
| | 702.80 | 2.5 | 442500 | 17.55 | 11.58 | 8.78 | 5.79 | | | X | X | X* | X* | X* | X* |
| | 816.57 | 2.1 | 442500 | 14.74 | 9.73 | 7.37 | 4.87 | | | X | X | X* | X* | X* | X* |
| | 979.31 | 1.8 | 442500 | 12.64 | 8.34 | 6.32 | 4.17 | | | X | X | X* | X* | X* | X* |
| | 1165.22 | 1.5 | 442500 | 10.53 | 6.95 | 5.27 | 3.48 | | | X | X | X* | X* | X* | X* |
| | 1353.86 | 1.3 | 442500 | 9.13 | 6.02 | 4.56 | 3.01 | | | X | X* | X* | X* | X* | X* |
| | 1623.67 | 1.1 | 442500 | 7.72 | 5.10 | 3.86 | 2.55 | | | X | X* | X* | X* | X* | X* |

* Caution - The motor power may exceed the gear unit's mechanical torque capacity
◈ The mechanical power limit of the solid input shaft type "W" may limit the reducer rating.
All ratings are mechanical. See page 14 for thermal considerations.

| lb | W | 56C | 140TC | 180TC | 210TC | 250TC | 280TC | 320TC | 360TC |
|---|---|---|---|---|---|---|---|---|---|
| **SK 9096.1** | 4221 | - | - | - | 4057 | 4113 | 4113 | 4143 | 4176 |
| **SK 9096.1/62** | 4298 | 4287 | 4287 | 4302 | 4333 | 4355 | 4355 | - | - |


Send Quote Requests to info@automatedpt.com
Call +1(800)985-6929 To Order or Order Online At Nordgearmotors.com

# SK 9096.1/63
# NEMA-C + W
# Ratings & Combinations

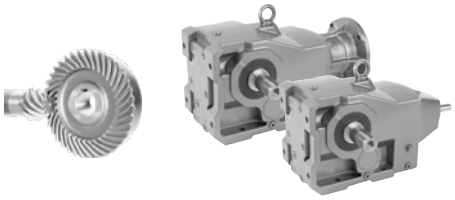



| Model Type | Gear Ratio | Output Speed | Output Torque* | Maximum input power◈ Solid input shafts type "W" | | | | NEMA C-Face* Available Combinations | | | | | | | |
|---|---|---|---|---|---|---|---|---|---|---|---|---|---|---|---|
| | | | | Input Speed | | | | | | | | | | | |
| | $i_{tot}$ | $n_2$ 1750 rpm | $T_{2\,max}$ | 1750 rpm | 1150 rpm | 875 rpm | 580 rpm | | | | | | | | |
| | | [rpm] | [lb-in] | [hp] | [hp] | [hp] | [hp] | 56C | 140TC | 180TC | 210TC | 250TC | 280TC | 320TC | 360TC |
| SK 9096.1/63 | 1774.21 | 0.99 | 442500 | 6.95 | 4.59 | 3.48 | 2.29 | X | X | X | X* | X* | X* | | |
| | 2052.10 | 0.85 | 442500 | 5.97 | 3.94 | 2.98 | 1.97 | X | X | X | X* | X* | X* | | |
| | 2316.27 | 0.76 | 442500 | 5.34 | 3.52 | 2.67 | 1.76 | X | X | X | X* | X* | X* | | |
| | 2679.06 | 0.65 | 442500 | 4.56 | 3.01 | 2.28 | 1.51 | X | X | X* | X* | X* | X* | | |
| | 3210.12 | 0.55 | 442500 | 3.86 | 2.55 | 1.93 | 1.27 | X | X | X* | X* | X* | X* | | |
| | 3692.48 | 0.47 | 442500 | 3.30 | 2.18 | 1.65 | 1.09 | X | X | X* | X* | X* | X* | | |
| | 4441.42 | 0.39 | 442500 | 2.74 | 1.81 | 1.37 | 0.90 | X | X | X* | X* | X* | X* | | |
| | 5575.65 | 0.31 | 442500 | 2.18 | 1.44 | 1.09 | 0.72 | X | X | X* | X* | X* | X* | | |
| | 6706.55 | 0.26 | 442500 | 1.83 | 1.20 | 0.91 | 0.60 | X | X* | X* | X* | X* | X* | | |
| | 7842.34 | 0.22 | 442500 | 1.54 | 1.02 | 0.77 | 0.51 | X | X* | X* | X* | X* | X* | | |
| | 8306.57 | 0.21 | 442500 | 1.47 | 0.97 | 0.74 | 0.49 | X | X* | X* | X* | X* | X* | | |
| | 9713.32 | 0.18 | 442500 | 1.26 | 0.83 | 0.63 | 0.42 | X | X* | X* | X* | X* | X* | | |
| | 11954.86 | 0.15 | 442500 | 1.05 | 0.70 | 0.53 | 0.35 | X | X* | X* | X* | X* | | | |
| | 13432.68 | 0.13 | 442500 | 0.97 | 0.64 | 0.48 | 0.32 | X* | X* | X* | X* | | | | |

* Caution - The motor power may exceed the gear unit's mechanical torque capacity
◈ The mechanical power limit of the solid input shaft type "W" may limit the reducer rating.
All ratings are mechanical. See page 14 for thermal considerations.

| lb | W | 56C | 140TC | 180TC | 210TC | 250TC | 280TC |
|---|---|---|---|---|---|---|---|
| SK 9096.1/63 | 4315 | 4304 | 4304 | 4319 | 4350 | 4372 | 4372 |


Send Quote Requests to info@automatedpt.com
Call +1(800)985-6929 To Order or Order Online At Nordgearmotors.com

Send Quote Requests to info@automatedpt.com
Call +1(800)985-6929 To Order or Order Online At Nordgearmotors.com

# Right-angle Helical-bevel Dimensions

## Dimensions

- Gearmotor
- Reducers C-Face
- Options
- Shafts

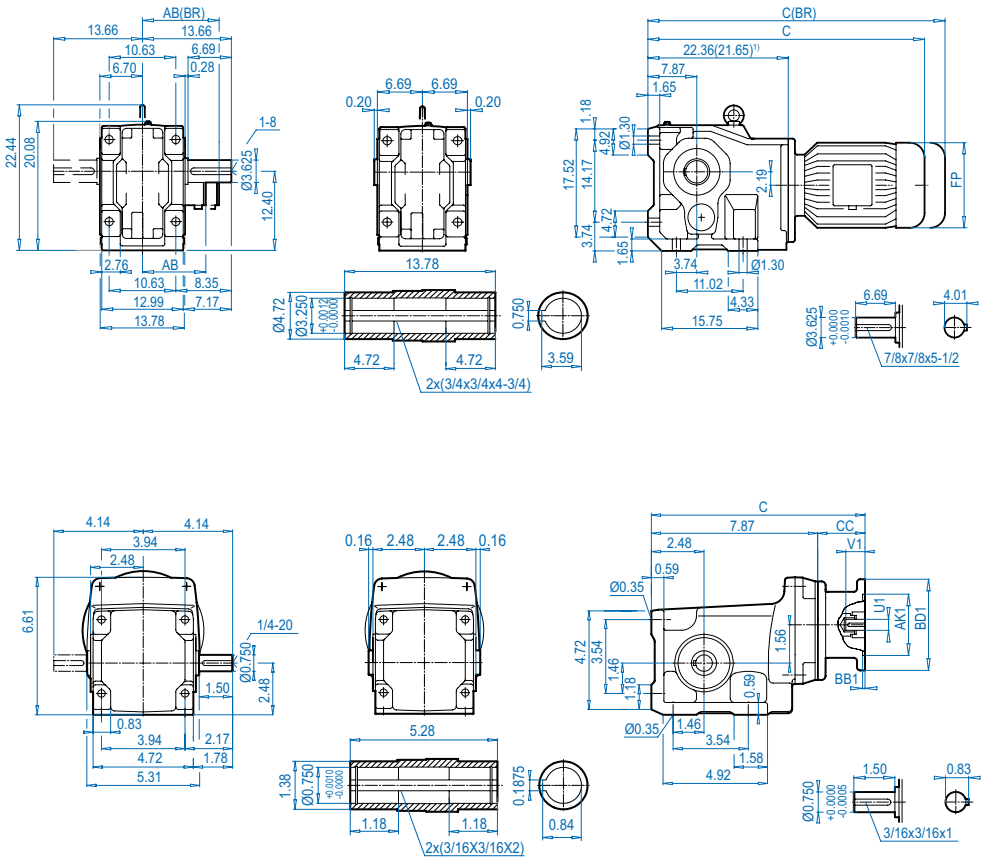


NORD DRIVESYSTEMS

www.nord.com

UNICASE™

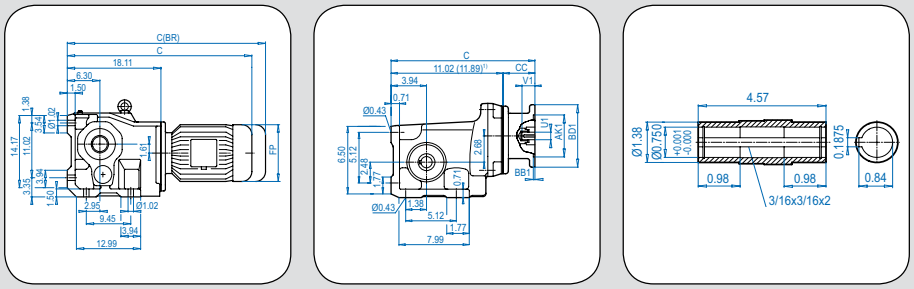

Send Quote Requests to info@automatedpt.com
Call +1(800)985-6929 To Order or Order Online At Nordgearmotors.com

# SK 92072 + Motor




DRIVESYSTEMS



## SK 92072

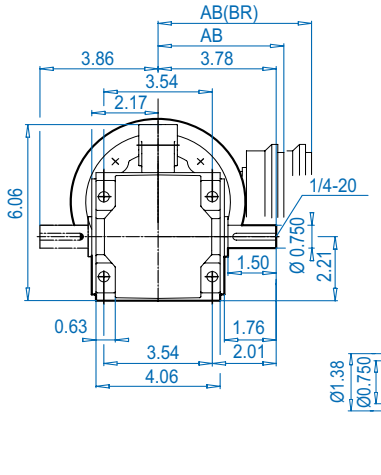


## SK 92072AX

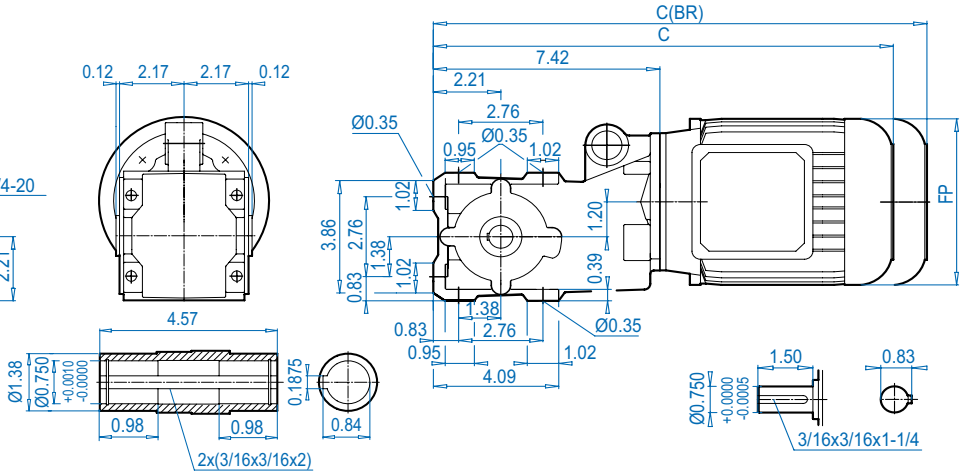


## SK 92072VF

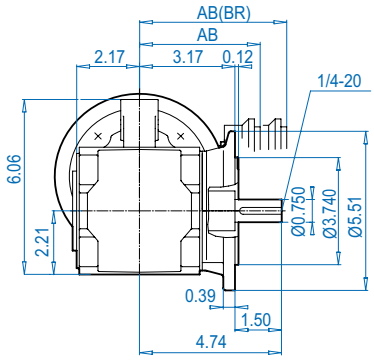


## SK 92072AF

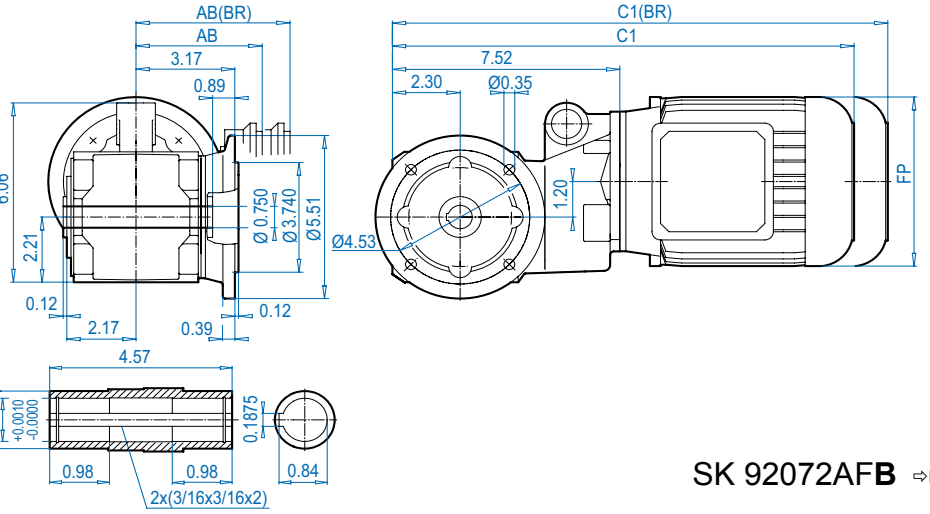


## SK 92072AX**B** ⇨🕮 574

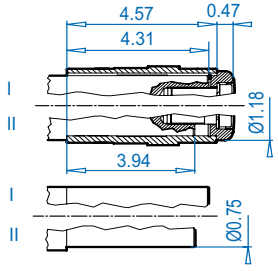


## SK 92072A**D**

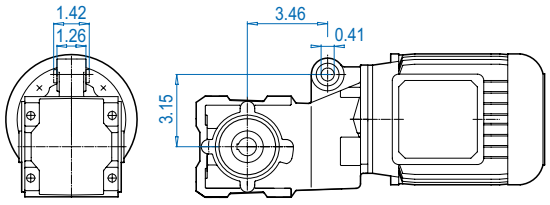


## SK 92072AF**B** ⇨🕮 574

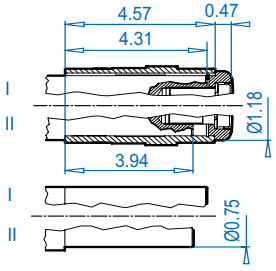


### Motor dimensions

| Standard efficiency | 63S/L | 71S/L | 80S/L | 90S/L | | | For Other Connection Possibilities please see ⇨🕮 554 & 556 |
|---|---|---|---|---|---|---|---|
| Energy efficiency | | | 80LH | 90SH/LH | | | |
| AB | 4.53 | 4.88 | 5.59 | 5.79 | | |  |
| AB (BR) | 4.84 | 5.00 | 5.63 | 5.83 | | | |
| C1 | 15.08 | 15.94 | 16.81 | 18.39 | | | |
| C1 (BR) | 17.28 | 18.23 | 19.33 | 21.34 | | | |
| C | 15.00 | 15.87 | 16.73 | 18.31 | | | |
| C (BR) | 17.20 | 18.15 | 19.25 | 21.26 | | | |
| FP | 5.12 | 5.71 | 6.50 | 7.20 | | | |

**(BR)** denotes Brakemotor


Send Quote Requests to info@automatedpt.com
Call +1(800)985-6929 To Order or Order Online At Nordgearmotors.com

DRIVESYSTEMS

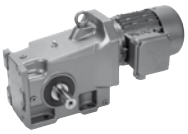



# SK 92072 + Motor

## SK 92072AZ

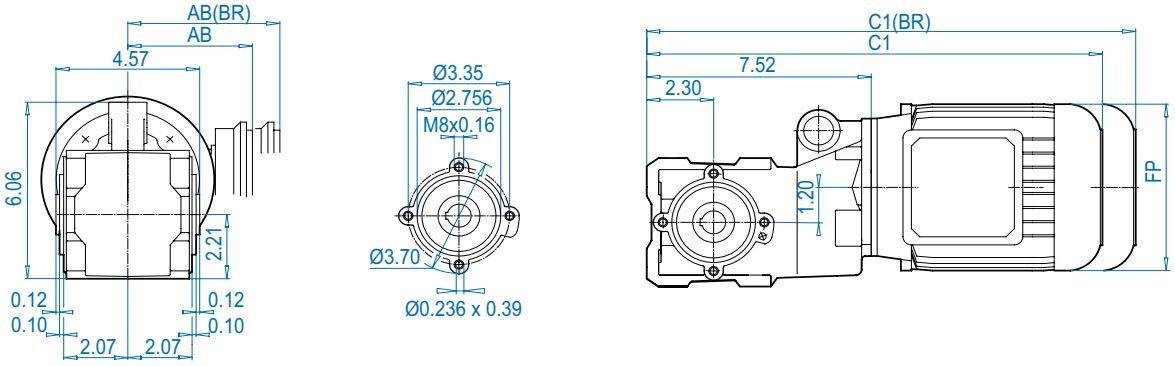


## SK 92072AZ**SH**

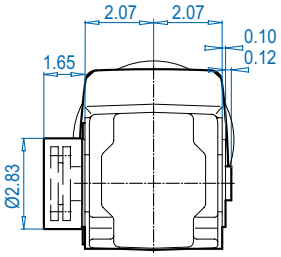


Dimensions in Inches
DIMENSIONS
ALTERNATE SHAFTS SEE PAGES 566 - 573

## SK 92072AZ

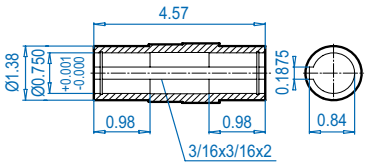


## SK 92072AZ**B** ⇨🕮 574

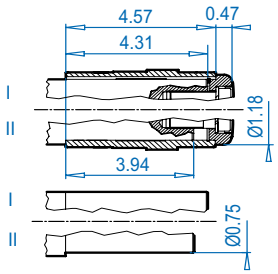


## SK 92072AZ**S** ⇨🕮 571

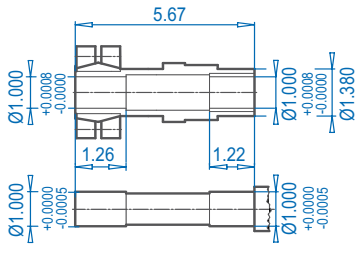


### Motor dimensions

| Standard efficiency | 63S/L | 71S/L | 80S/L | 90S/L | | | For Other Connection Possibilities please see ⇨🕮 554 & 556 |
|---|---|---|---|---|---|---|---|
| Energy efficiency | | | 80LH | 90SH/LH | | | |
| **AB** | 4.53 | 4.88 | 5.59 | 5.79 | | | 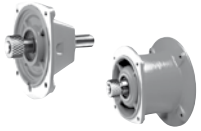 |
| **AB (BR)** | 4.84 | 5.00 | 5.63 | 5.83 | | | |
| **C1** | 15.08 | 15.94 | 16.81 | 18.39 | | | |
| **C1 (BR)** | 17.28 | 18.23 | 19.33 | 21.34 | | | |
| **FP** | 5.12 | 5.71 | 6.50 | 7.20 | | | |

**(BR)** denotes Brakemotor


Send Quote Requests to info@automatedpt.com
Call +1(800)985-6929 To Order or Order Online At Nordgearmotors.com

# SK 92072 + NEMA




DRIVESYSTEMS



## SK 92072

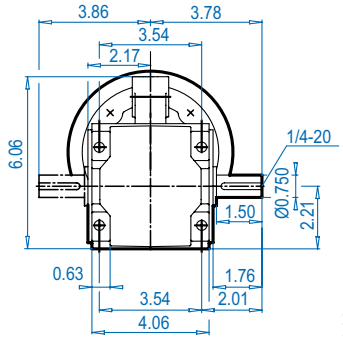


## SK 92072AX

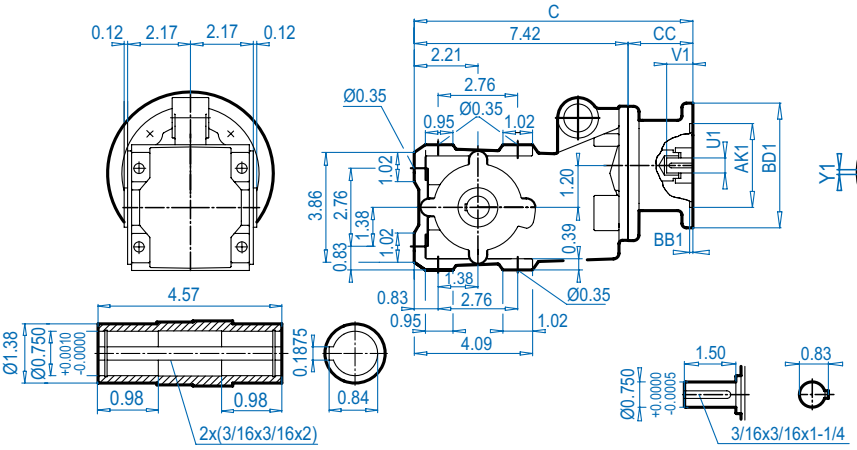


## NEMA Input

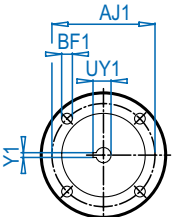


## SK 92072VF

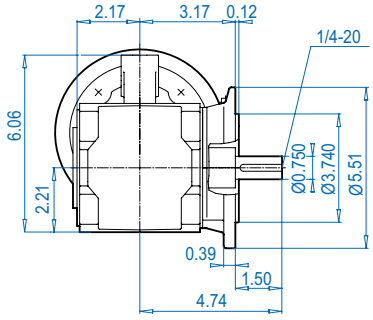


## SK 92072AF

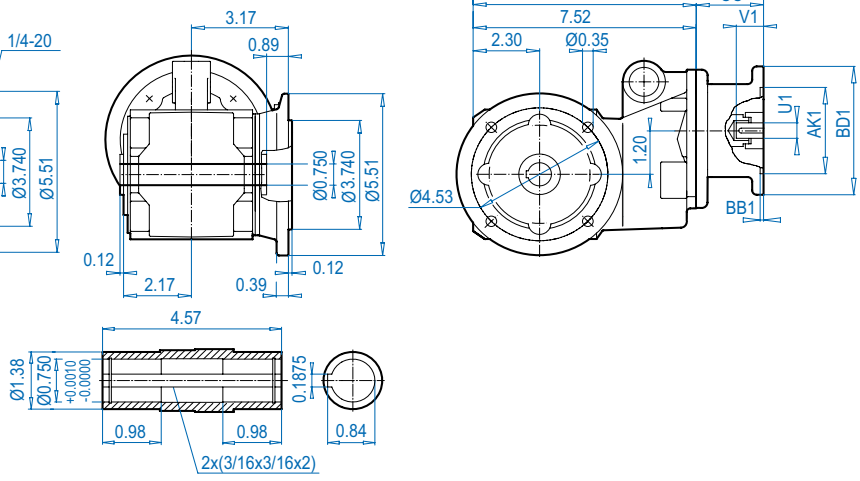


## SK 92072AXB ⇨🕮 574

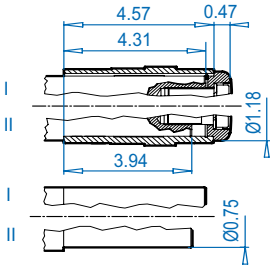


## SK 92072AD

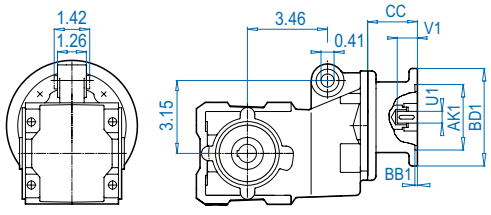


## SK 92072AFB ⇨🕮 574

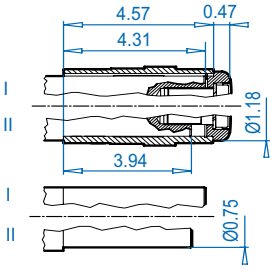


### NEMA Dimensions

| Type | AJ1 | AK1 | BB1 | BD1 | BF1 | U1 | V1 | UY1 | Y1 | C | C1 | CC |
|---|---|---|---|---|---|---|---|---|---|---|---|---|
| **56C** | 5.88 | 4.500 | 0.18 | 6.61 | 0.43 | 0.625 | 2.06 | 0.71 | 0.188 | 11.73 | 11.81 | 4.29 |
| **140TC** | 5.88 | 4.500 | 0.18 | 6.61 | 0.43 | 0.875 | 2.12 | 0.96 | 0.188 | 11.73 | 11.81 | 4.29 |


Send Quote Requests to info@automatedpt.com
Call +1(800)985-6929 To Order or Order Online At Nordgearmotors.com

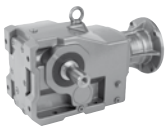


# SK 92072 + NEMA

## SK 92072AZ

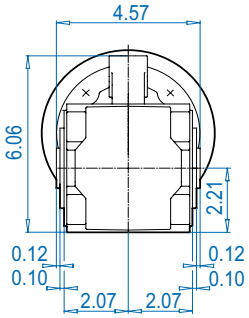


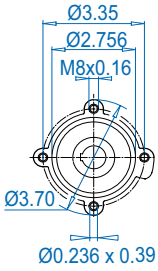


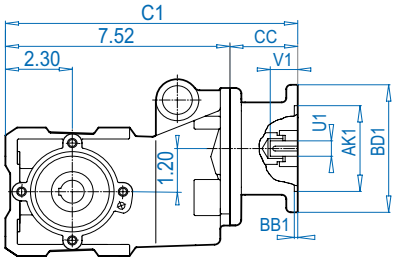


## NEMA Input

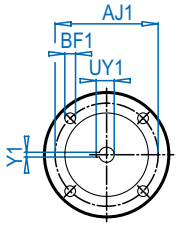


Dimensions in inches
DIMENSIONS

## SK 92072AZ**SH**

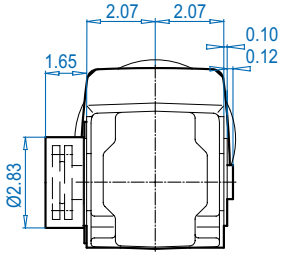


ALTERNATE SHAFTS SEE PAGES 566 - 573

## SK 92072AZ

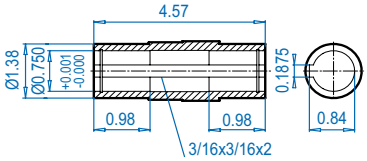


## SK 92072AZ**B** ⇨🕮 574

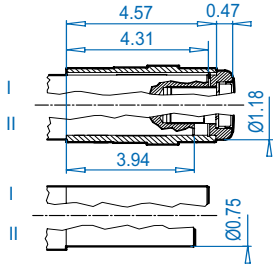


## SK 92072AZ**S** ⇨🕮 571

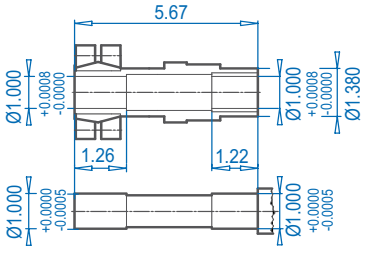


**NEMA Dimensions**

| Type | AJ1 | AK1 | BB1 | BD1 | BF1 | U1 | V1 | UY1 | Y1 | C1 | CC |
|---|---|---|---|---|---|---|---|---|---|---|---|
| **56C** | 5.88 | 4.500 | 0.18 | 6.61 | 0.43 | 0.625 | 2.06 | 0.71 | 0.188 | 11.81 | 4.29 |
| **140TC** | 5.88 | 4.500 | 0.18 | 6.61 | 0.43 | 0.875 | 2.12 | 0.96 | 0.188 | 11.81 | 4.29 |


Send Quote Requests to info@automatedpt.com
Call +1(800)985-6929 To Order or Order Online At Nordgearmotors.com

# SK 92172 + Motor




DRIVESYSTEMS



## SK 92172

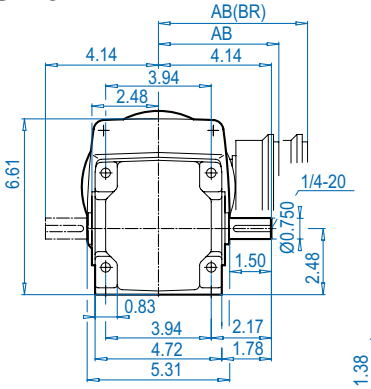


## SK 92172AX

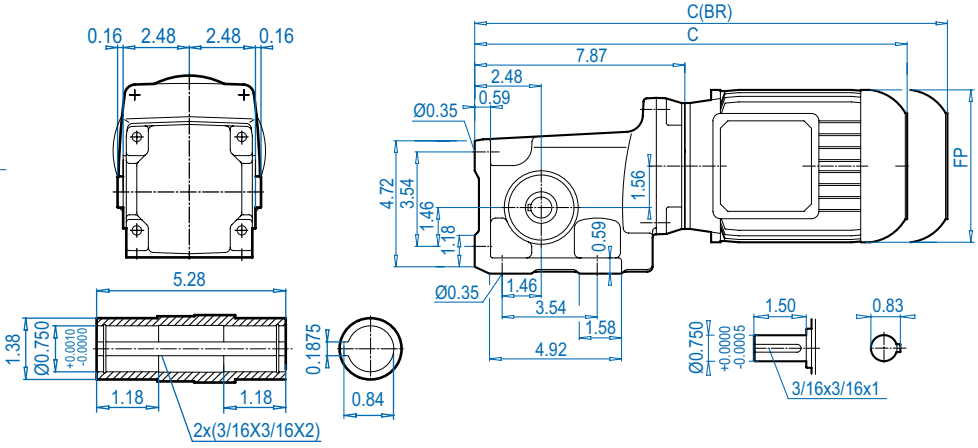


## SK 92172VF

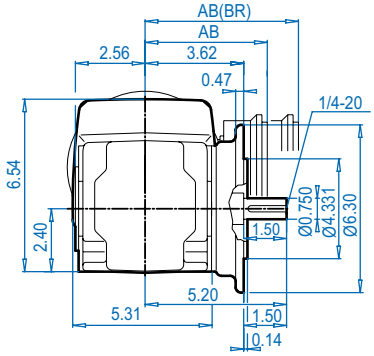


## SK 92172AF

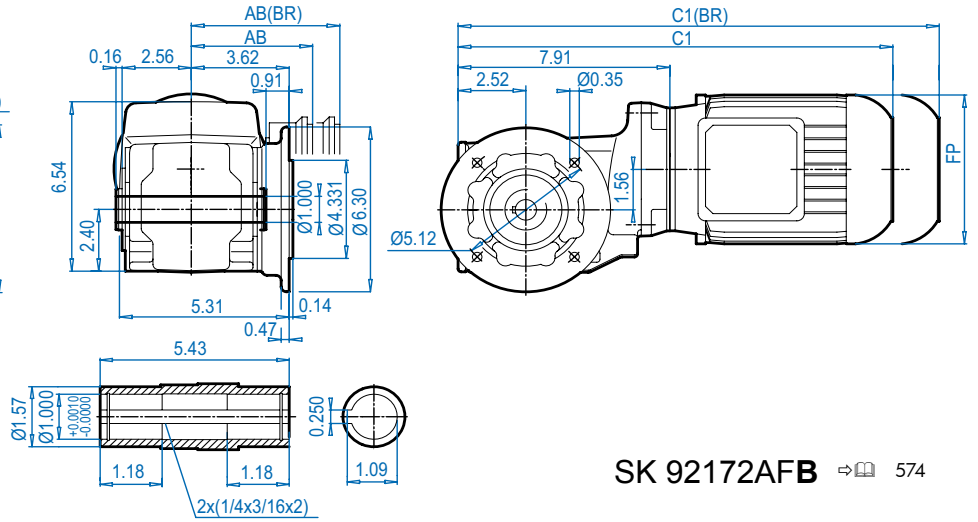


## SK 92172AX**B** ⇨🕮 574

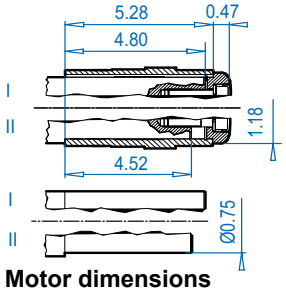


## SK 92172AF**B** ⇨🕮 574

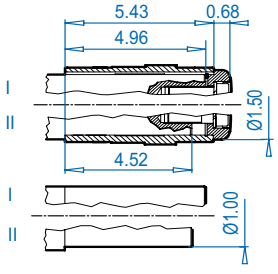


### Motor dimensions

| Standard efficiency | 63S/L | 71S/L | 80S/L | 90S/L | | | For Other Connection Possibilities please see ⇨🕮 554 & 556 |
|---|---|---|---|---|---|---|---|
| Energy efficiency | | | 80LH | 90SH/LH | | | |
| **AB** | 4.53 | 4.88 | 5.59 | 5.79 | | |  |
| **AB (BR)** | 4.84 | 5.00 | 5.63 | 5.83 | | | |
| **C1** | 15.47 | 16.34 | 17.20 | 18.78 | | | |
| **C1 (BR)** | 17.68 | 18.62 | 19.72 | 21.73 | | | |
| **C** | 15.43 | 16.30 | 17.17 | 18.74 | | | |
| **C (BR)** | 17.64 | 18.58 | 19.69 | 21.69 | | | |
| **FP** | 5.12 | 5.71 | 6.50 | 7.20 | | | |

**(BR)** denotes Brakemotor


Send Quote Requests to info@automatedpt.com
Call +1(800)985-6929 To Order or Order Online At Nordgearmotors.com

DRIVESYSTEMS



# SK 92172 + Motor

## SK 92172AZ

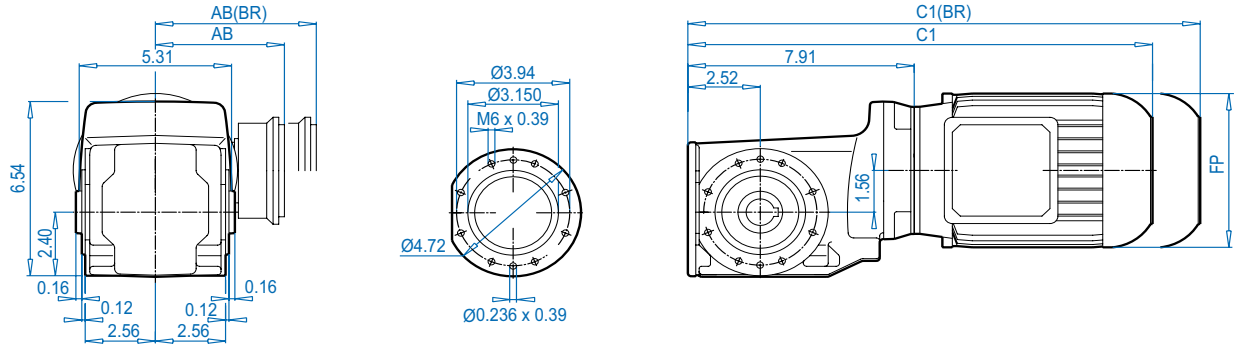


## SK 92172AZ**D**

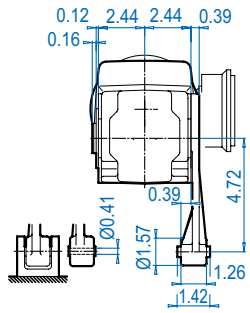


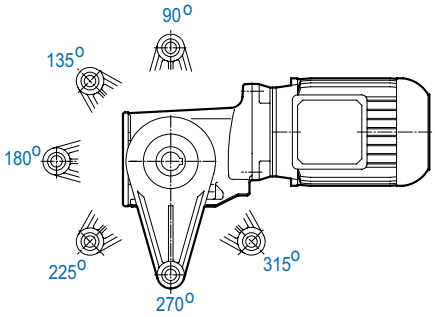


## SK 92172AZ**SH**

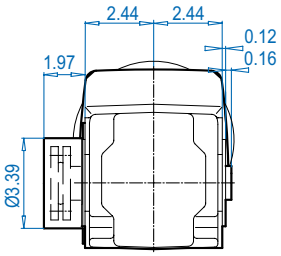


## SK 92172AZ

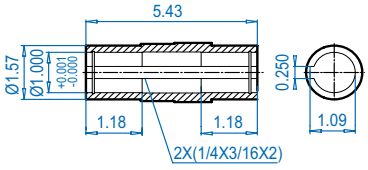


## SK 92172AZ**B** ⇨🕮 574

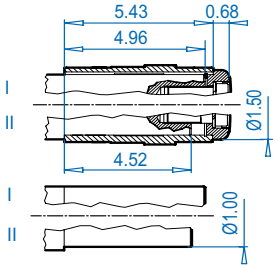


## SK 92172AZ**S** ⇨🕮 571

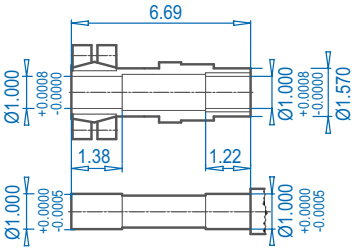


### Motor dimensions

| Standard efficiency | 63S/L | 71S/L | 80S/L | 90S/L | | | For Other Connection Possibilities please see ⇨🕮 554 & 556 |
|---|---|---|---|---|---|---|---|
| Energy efficiency | | | 80LH | 90SH/LH | | | |
| AB | 4.53 | 4.88 | 5.59 | 5.79 | | | 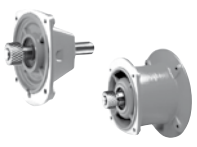 |
| AB (BR) | 4.84 | 5.00 | 5.63 | 5.83 | | | |
| C1 | 15.47 | 16.34 | 17.20 | 18.78 | | | |
| C1 (BR) | 17.68 | 18.62 | 19.72 | 21.73 | | | |
| FP | 5.12 | 5.71 | 6.50 | 7.20 | | | |

**(BR)** denotes Brakemotor

Dimensions in Inches
DIMENSIONS
ALTERNATE SHAFTS SEE PAGES 566 - 573


Send Quote Requests to info@automatedpt.com
Call +1(800)985-6929 To Order or Order Online At Nordgearmotors.com

# SK 92172 + NEMA




DRIVESYSTEMS

## SK 92172

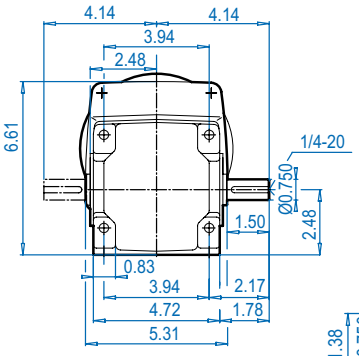


## SK 92172AX

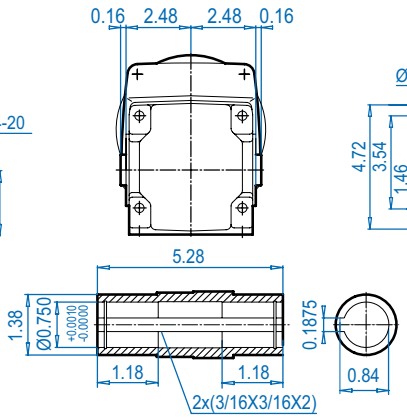


## NEMA Input

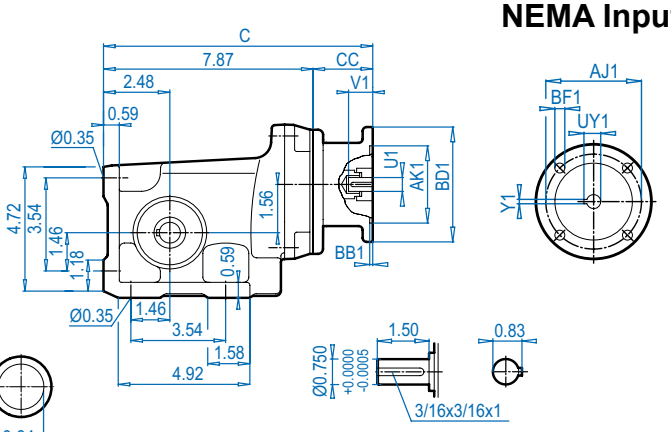


## SK 92172VF

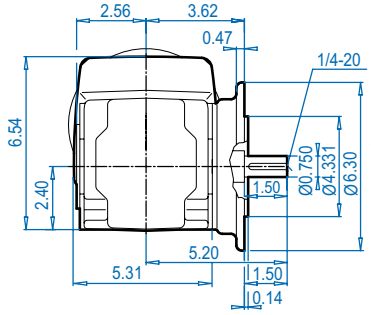


## SK 92172AF

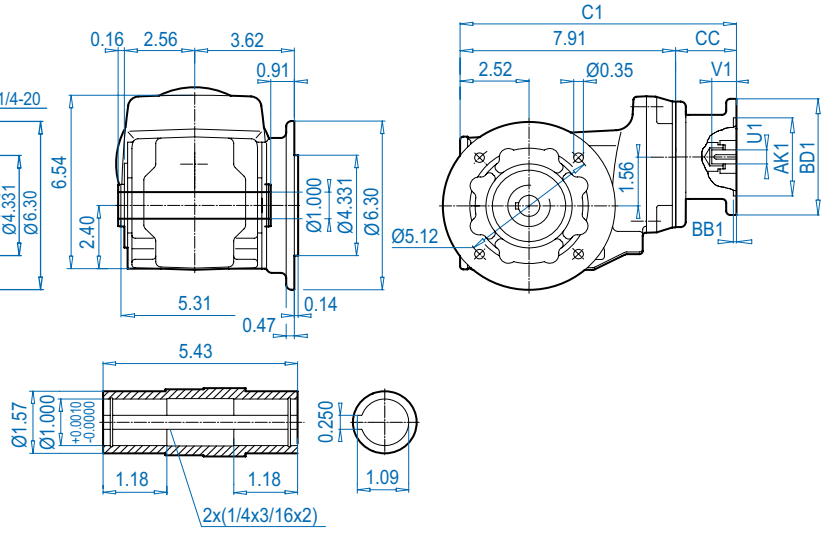


## SK 92172AX**B** ⇨🕮 574

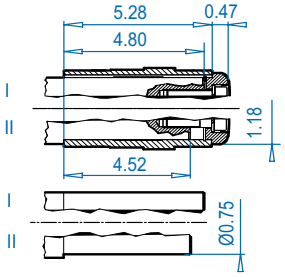


## SK 92172AF**B** ⇨🕮 574

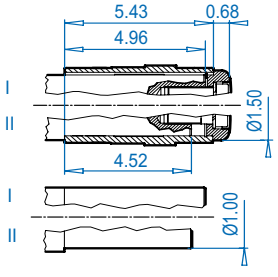


### NEMA Dimensions

| Type | AJ1 | AK1 | BB1 | BD1 | BF1 | U1 | V1 | UY1 | Y1 | C | C1 | CC |
|---|---|---|---|---|---|---|---|---|---|---|---|---|
| **56C** | 5.88 | 4.500 | 0.18 | 6.61 | 0.43 | 0.625 | 2.06 | 0.71 | 0.188 | 12.16 | 11.93 | 4.29 |
| **140TC** | 5.88 | 4.500 | 0.18 | 6.61 | 0.43 | 0.875 | 2.12 | 0.96 | 0.188 | 12.16 | 11.93 | 4.29 |




Send Quote Requests to info@automatedpt.com
Call +1(800)985-6929 To Order or Order Online At Nordgearmotors.com

DRIVESYSTEMS

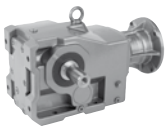



# SK 92172 + NEMA

## SK 92172AZ

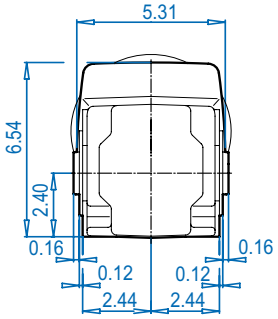


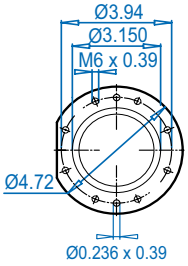


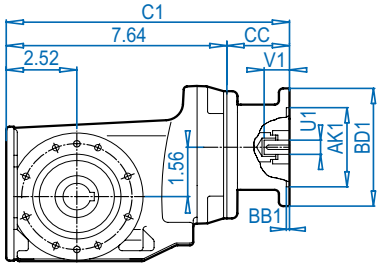


## NEMA Input

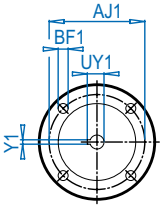


Dimensions in Inches
DIMENSIONS

## SK 92172AZ**D**

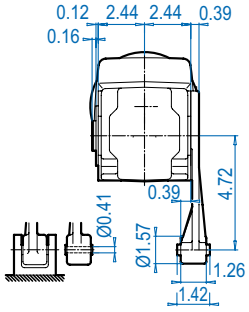


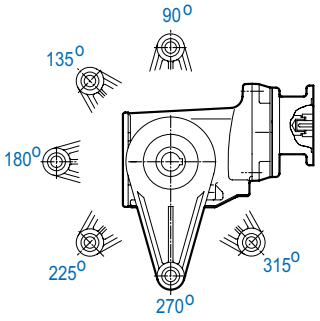


## SK 92172AZ**SH**

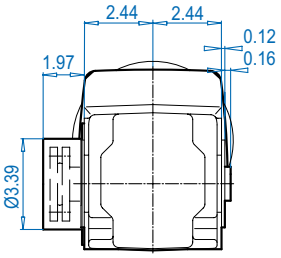


## SK 92172AZ

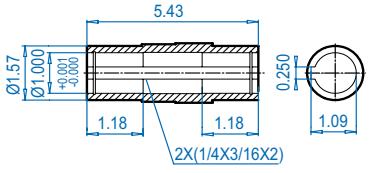


## SK 92172AZ**B** ⇨🕮 574

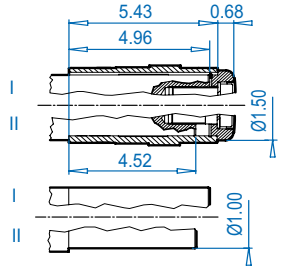


## SK 92172AZ**S** ⇨🕮 571

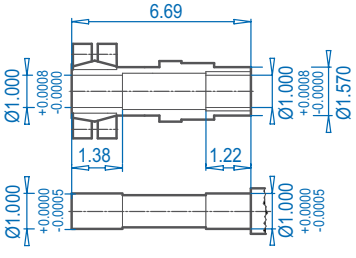


**NEMA Dimensions**

| Type | AJ1 | AK1 | BB1 | BD1 | BF1 | U1 | V1 | UY1 | Y1 | C1 | CC |
|---|---|---|---|---|---|---|---|---|---|---|---|
| **56C** | 5.88 | 4.500 | 0.18 | 6.61 | 0.43 | 0.625 | 2.06 | 0.71 | 0.188 | 11.93 | 4.29 |
| **140TC** | 5.88 | 4.500 | 0.18 | 6.61 | 0.43 | 0.875 | 2.12 | 0.96 | 0.188 | 11.93 | 4.29 |

ALTERNATE SHAFTS SEE PAGES 566 - 573


Send Quote Requests to info@automatedpt.com
Call +1(800)985-6929 To Order or Order Online At Nordgearmotors.com

# SK 92372 + Motor




DRIVESYSTEMS

## SK 92372

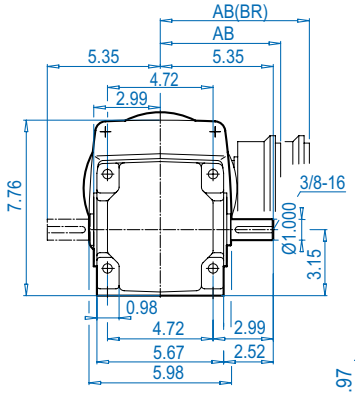


## SK 92372AX

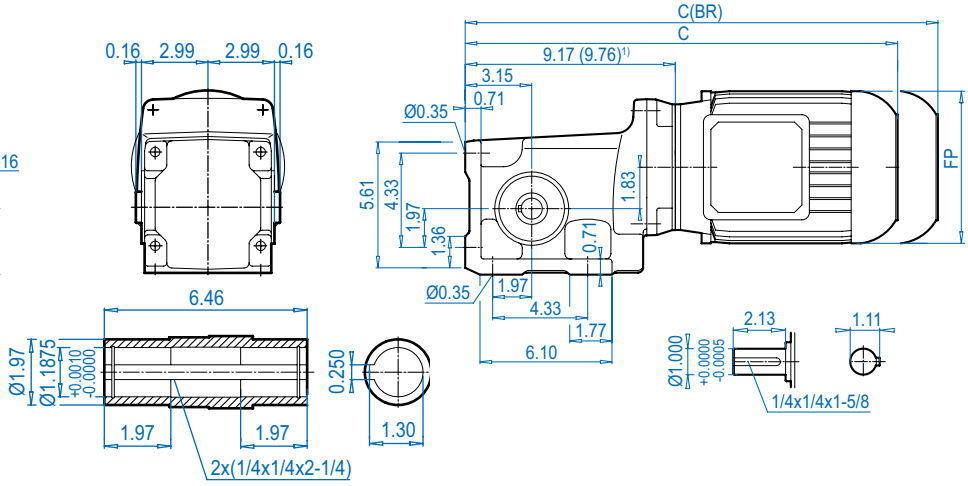


## SK 92372VF

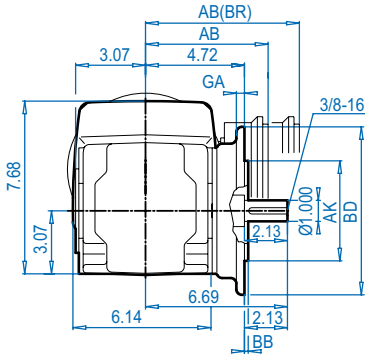


## SK 92372AF

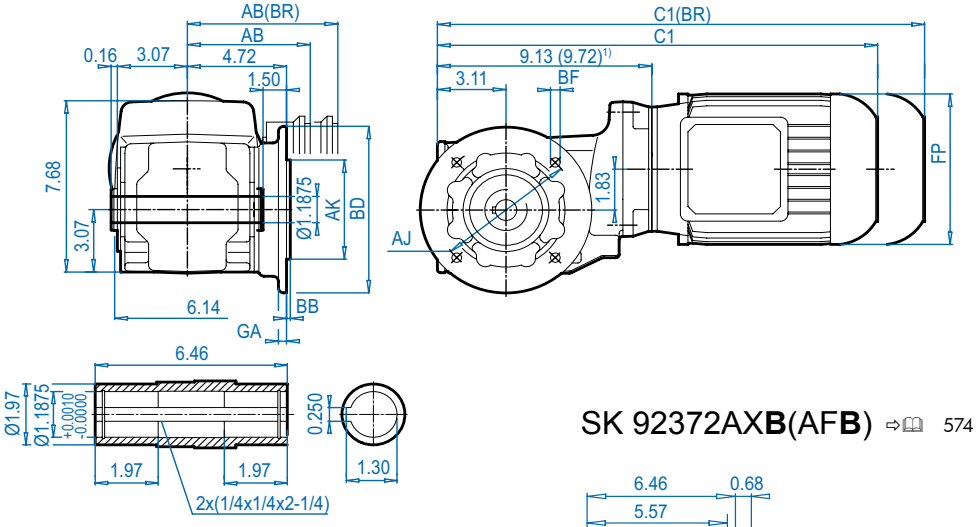


SK 92372AX**B**(AF**B**) ⇨🕮 574

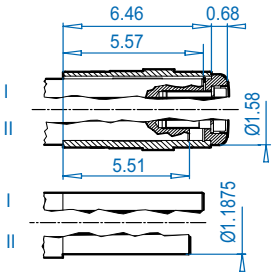


### Mounting flange

| BD (mm) | AJ | AK | BB | BF | GA |
|---|---|---|---|---|---|
| 6.30 (160) | 5.12 | 4.331 + 0.0005 - 0.0004 | 0.14 | 0.35 | 0.47 |
| 7.87 (200) | 6.50 | 5.118 + 0.0005 - 0.0004 | 0.14 | 0.43 | 0.47 |

### Motor dimensions

| Standard efficiency | 63S/L | 71S/L | 80S/L | 90S/L[1)] | 100L[1)] | | For Other Connection Possibilities please see ⇨🕮 554 & 556 |
|---|---|---|---|---|---|---|---|
| Energy efficiency | | | 80LH | 90SH/LH[1)] | 100LH[1)] | 112MH[1)] | |
| **AB** | 4.53 | 4.88 | 5.59 | 5.79 | 6.65 | 7.05 |  |
| **AB (BR)** | 4.84 | 5.24 | 5.63 | 5.83 | 6.26 | 6.69 | |
| **C1** | 16.69 | 17.56 | 18.43 | 20.59 | 21.77 | 22.56 | |
| **C1 (BR)** | 18.90 | 19.84 | 20.94 | 23.54 | 25.35 | 26.22 | |
| **C** | 16.73 | 17.60 | 18.46 | 20.63 | 21.81 | 22.60 | |
| **C (BR)** | 18.94 | 19.88 | 20.98 | 23.58 | 25.39 | 26.26 | |
| **FP** | 5.12 | 5.71 | 6.50 | 7.20 | 7.91 | 8.98 | |

**(BR)** denotes Brakemotor




Send Quote Requests to info@automatedpt.com
Call +1(800)985-6929 To Order or Order Online At Nordgearmotors.com

DRIVESYSTEMS

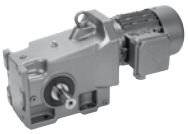

# SK 92372 + Motor

## SK 92372AZ

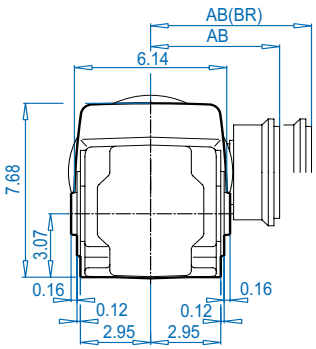


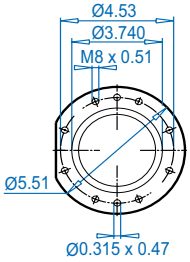


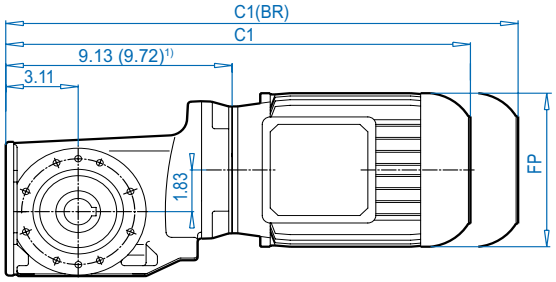


## SK 92372AZ**D**

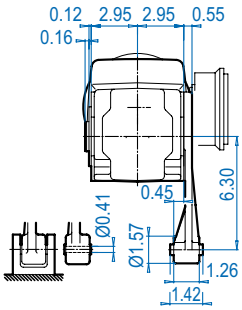


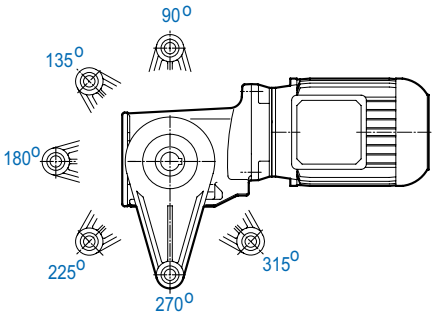


## SK 92372AZ**SH**

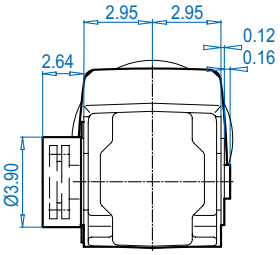


## SK 92372AZ

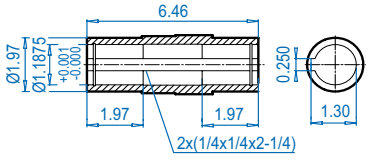


## SK 92372AZ**B** ⇨🕮 574

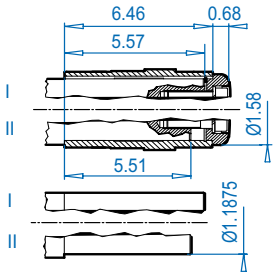


## SK 92372AZ**S** ⇨🕮 571

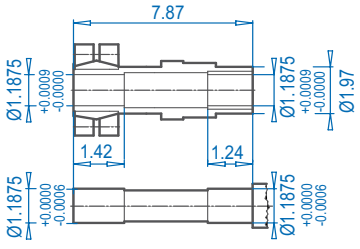


### Motor dimensions

| Standard efficiency | 63S/L | 71S/L | 80S/L | 90S/L[1)] | 100L[1)] | | ForOtherConnection Possibilitiespleasesee ⇨🕮 554 & 556 |
|---|---|---|---|---|---|---|---|
| Energy efficiency | | | 80LH | 90SH/LH[1)] | 100LH[1)] | 112MH[1)] | |
| AB | 4.53 | 4.88 | 5.59 | 5.79 | 6.65 | 7.05 | 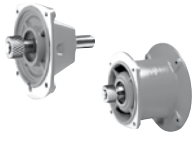 |
| AB (BR) | 4.84 | 5.24 | 5.63 | 5.83 | 6.26 | 6.69 | |
| C1 | 16.69 | 17.56 | 18.43 | 20.59 | 21.77 | 22.56 | |
| C1 (BR) | 18.90 | 19.84 | 20.94 | 23.54 | 25.35 | 26.22 | |
| FP | 5.12 | 5.71 | 6.50 | 7.20 | 7.91 | 8.98 | |

**(BR)** denotes Brakemotor

Dimensions in Inches DIMENSIONS
ALTERNATE SHAFTS SEE PAGES 566 - 573


Send Quote Requests to info@automatedpt.com
Call +1(800)985-6929 To Order or Order Online At Nordgearmotors.com

# SK 92372 + NEMA




## SK 92372

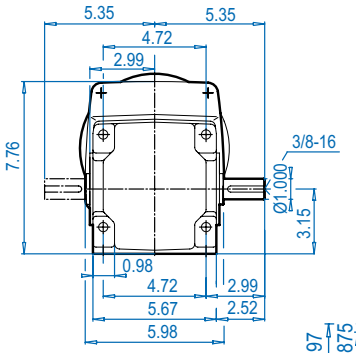


## SK 92372AX

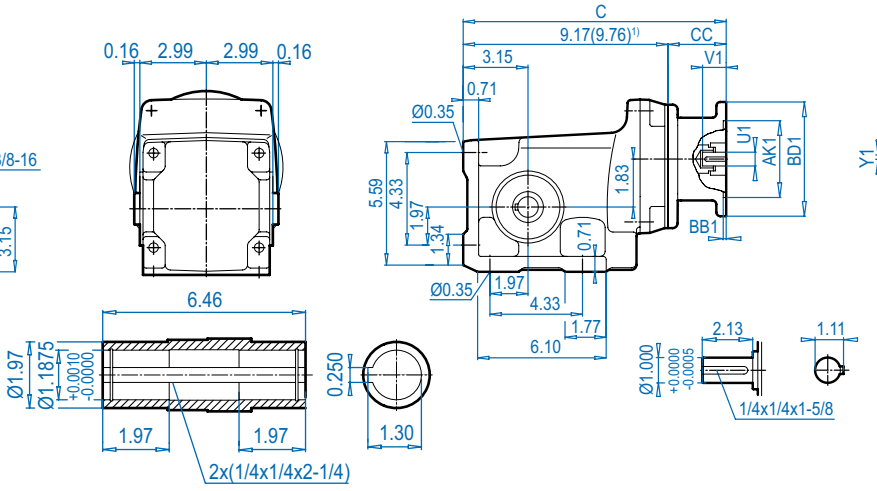


## NEMA Input

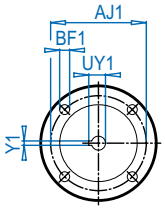


DIMENSIONS
Dimensions in Inches

## SK 92372VF

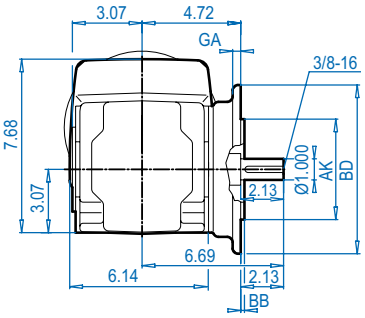


## SK 92372AF

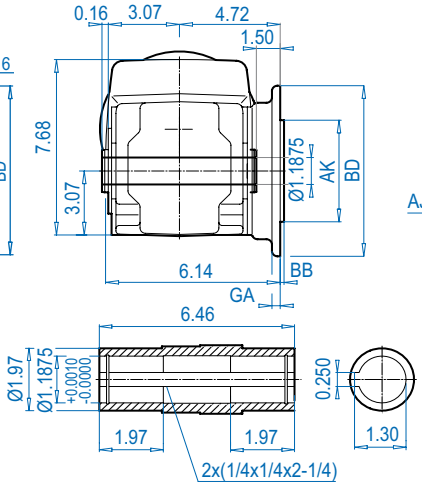


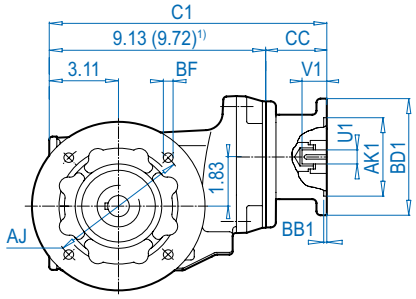


## SK 92372AX**B**(AF**B**) ⇨🕮 574

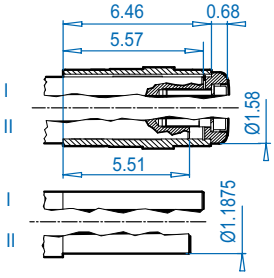


### Mounting flange

| BD (mm) | AJ | AK | BB | BF | GA |
|---|---|---|---|---|---|
| 6.30 (160) | 5.12 | 4.331 + 0.0005 - 0.0004 | 0.14 | 0.35 | 0.47 |
| 7.87 (200) | 6.50 | 5.118 + 0.0005 - 0.0004 | 0.14 | 0.43 | 0.47 |

### NEMA Dimensions

| Type | AJ1 | AK1 | BB1 | BD1 | BF1 | U1 | V1 | UY1 | Y1 | C | C1 | CC |
|---|---|---|---|---|---|---|---|---|---|---|---|---|
| **56C** | 5.88 | 4.500 | 0.18 | 6.61 | 0.43 | 0.625 | 2.06 | 0.71 | 0.188 | 13.46 | 13.43 | 4.29 |
| **140TC** | 5.88 | 4.500 | 0.18 | 6.61 | 0.43 | 0.875 | 2.12 | 0.96 | 0.188 | 13.46 | 13.43 | 4.29 |
| **180TC**[1)] | 7.25 | 8.500 | 0.23 | 9.17 | 0.59 | 1.125 | 2.62 | 1.24 | 0.250 | 15.27 | 15.24 | 5.51 |

ALTERNATE SHAFTS SEE PAGES 566 - 573


Send Quote Requests to info@automatedpt.com
Call +1(800)985-6929 To Order or Order Online At Nordgearmotors.com

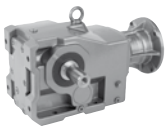


# SK 92372 + NEMA

## SK 92372AZ

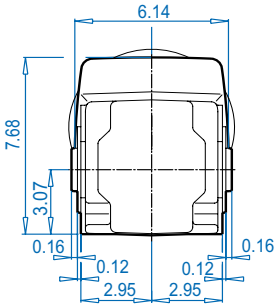


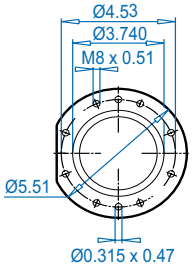


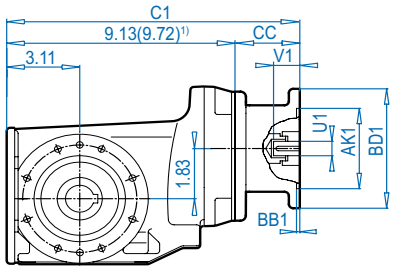


## NEMA Input

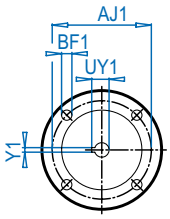


Dimensions in inches
DIMENSIONS

## SK 92372AZ**D**

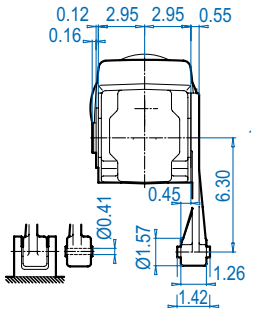


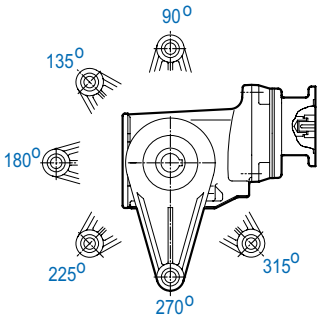


## SK 92372AZ**SH**

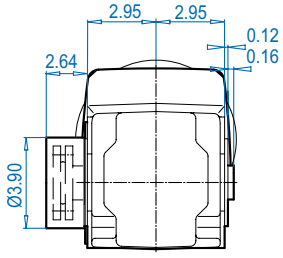


## SK 92372AZ

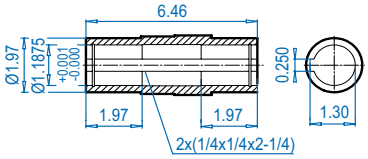


## SK 92372AZ**B** ⇨🕮 574

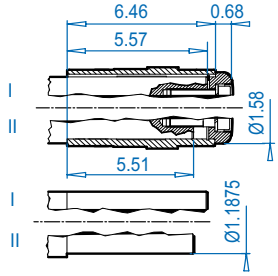


## SK 92372AZ**S** ⇨🕮 571

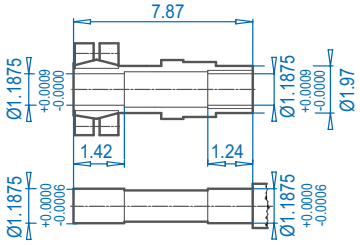


ALTERNATE SHAFTS SEE PAGES 566 - 573

### NEMA Dimensions

| Type | AJ1 | AK1 | BB1 | BD1 | BF1 | U1 | V1 | UY1 | Y1 | C1 | CC |
|---|---|---|---|---|---|---|---|---|---|---|---|
| **56C** | 5.88 | 4.500 | 0.18 | 6.61 | 0.43 | 0.625 | 2.06 | 0.71 | 0.188 | 13.43 | 4.29 |
| **140TC** | 5.88 | 4.500 | 0.18 | 6.61 | 0.43 | 0.875 | 2.12 | 0.96 | 0.188 | 13.43 | 4.29 |
| **180TC**[1)] | 7.25 | 8.500 | 0.23 | 9.17 | 0.59 | 1.125 | 2.62 | 1.24 | 0.250 | 15.24 | 5.51 |


Send Quote Requests to info@automatedpt.com
Call +1(800)985-6929 To Order or Order Online At Nordgearmotors.com

# SK 92672 + Motor




DRIVESYSTEMS

DIMENSIONS
Dimensions in Inches
ALTERNATE SHAFTS SEE PAGES 566 - 573

## SK 92672

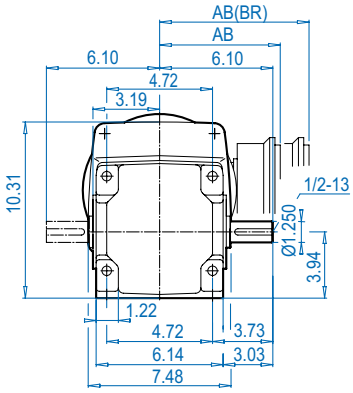


## SK 92672AX

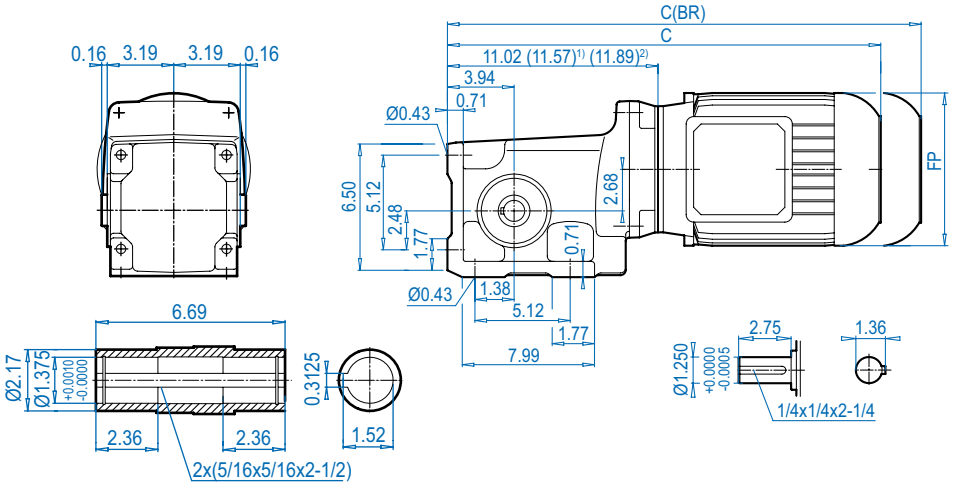


## SK 92672VF

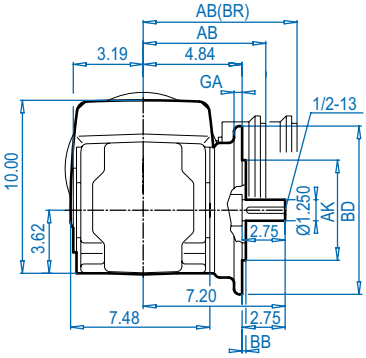


## SK 92672AF

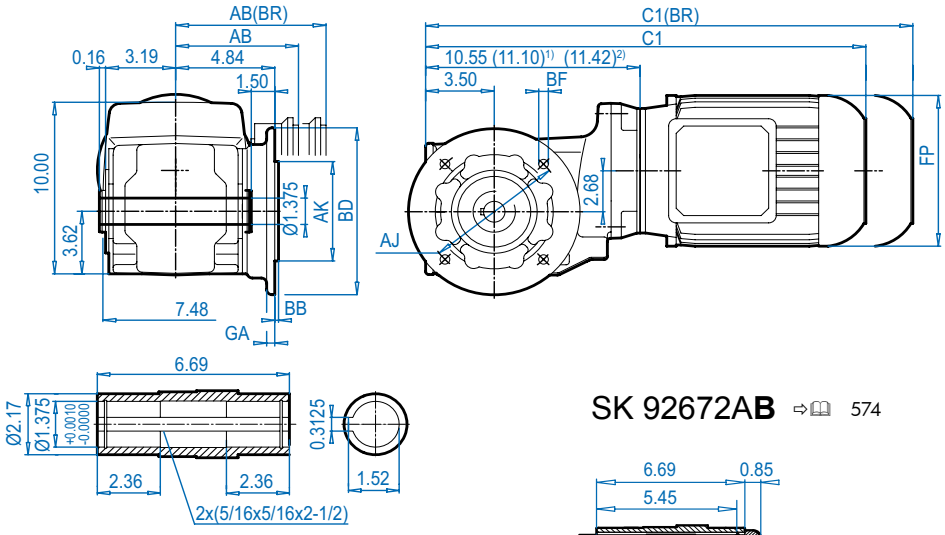


## SK 92672AB ⇨🕮 574

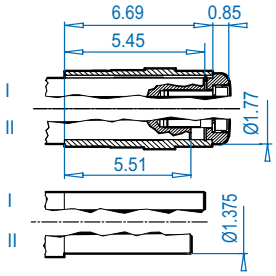


### Mounting flange

| BD (mm) | AJ | AK | BB | BF | GA |
|---|---|---|---|---|---|
| 6.30 (160) | 5.12 | 4.331 + 0.0005 - 0.0004 | 0.14 | 0.35 | 0.47 |
| 7.87 (200) | 6.50 | 5.118 + 0.0005 - 0.0004 | 0.14 | 0.43 | 0.47 |

### Motor dimensions

| Standard eff. | 63S/L | 71S/L | 80S/L | 90S/L[1)] | 100L[1)] | | 132S[2)] | For Other Connection Possibilities please see ⇨🕮 554 & 556 |
|---|---|---|---|---|---|---|---|---|
| Energy eff. | | | 80LH | 90SH/LH[1)] | 100LH[1)] | 112MH[2)] | 132SH[2)] | |
| AB | 4.53 | 4.88 | 5.59 | 5.79 | 6.65 | 7.05 | 8.03 |  |
| AB (BR) | 4.84 | 5.24 | 5.63 | 5.83 | 6.26 | 6.69 | 7.72 | |
| C1 | 18.11 | 18.98 | 19.84 | 21.97 | 23.15 | 24.25 | 27.83 | |
| C1 (BR) | 20.31 | 21.26 | 22.36 | 24.92 | 26.73 | 27.91 | 31.81 | |
| C | 18.58 | 19.45 | 20.31 | 22.44 | 23.62 | 24.72 | 28.31 | |
| C (BR) | 20.79 | 21.73 | 22.83 | 25.39 | 27.20 | 28.39 | 32.48 | |
| FP | 5.12 | 5.71 | 6.50 | 7.20 | 7.91 | 8.98 | 10.47 | |

**(BR)** denotes Brakemotor


Send Quote Requests to info@automatedpt.com
Call +1(800)985-6929 To Order or Order Online At Nordgearmotors.com

DRIVESYSTEMS

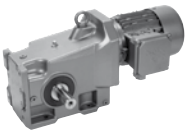

# SK 92672 + Motor

## SK 92672AZ

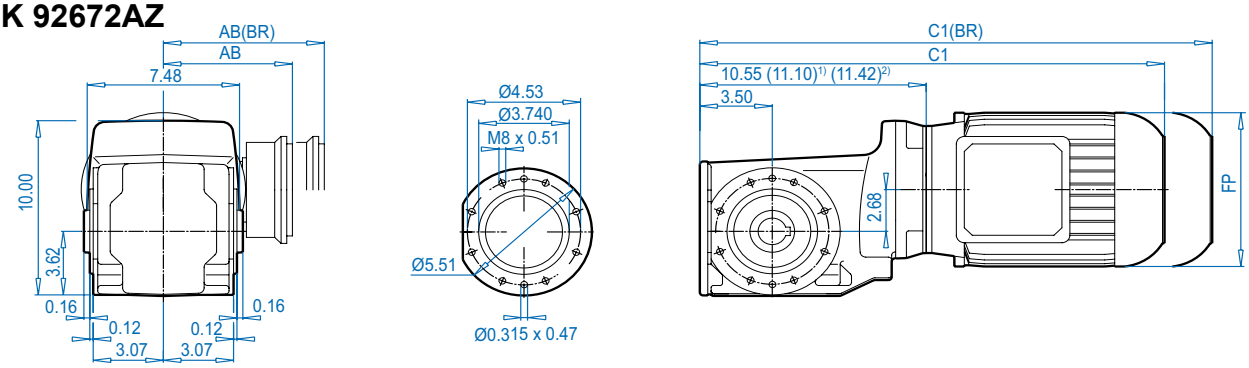


DIMENSIONS
Dimensions in Inches

## SK 92672AZ**D**

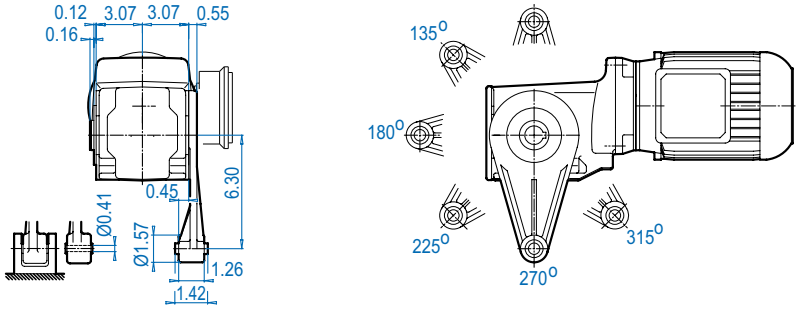


## SK 92672AZ**SH**

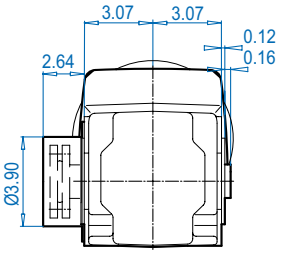


## SK 92672AZ

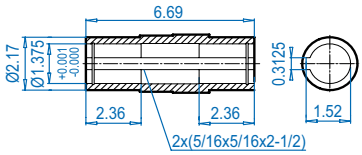


## SK 92672AZ**B** ⇨🕮 574

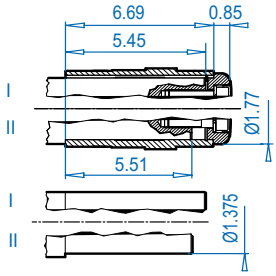


## SK 92672AZ**S** ⇨🕮 571

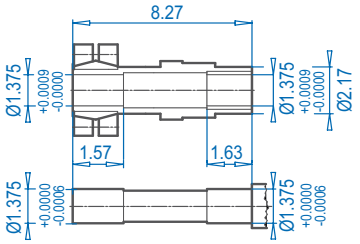


ALTERNATE SHAFTS SEE PAGES 566 - 573

### Motor dimensions

| Standard efficiency | 63S/L | 71S/L | 80S/L | 90S/L[1)] | 100L[1)] | | 132S[2)] | For Other Connection Possibilities please see ⇨🕮 554 & 556 |
|---|---|---|---|---|---|---|---|---|
| Energy efficiency | | | 80LH | 90SH/LH[1)] | 100LH[1)] | 112MH[2)] | 132SH[2)] | |
| AB | 4.53 | 4.88 | 5.59 | 5.79 | 6.65 | 7.05 | 8.03 | 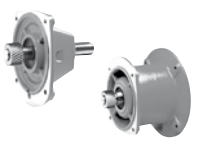 |
| AB (BR) | 4.84 | 5.24 | 5.63 | 5.83 | 6.26 | 6.69 | 7.72 | |
| C1 | 18.11 | 18.98 | 19.84 | 21.97 | 23.15 | 24.25 | 27.83 | |
| C1 (BR) | 20.31 | 21.26 | 22.36 | 24.92 | 26.73 | 27.91 | 31.81 | |
| FP | 5.12 | 5.71 | 6.50 | 7.20 | 7.91 | 8.98 | 10.47 | |

**(BR)** denotes Brakemotor


Send Quote Requests to info@automatedpt.com
Call +1(800)985-6929 To Order or Order Online At Nordgearmotors.com

# SK 92672 + NEMA




DRIVESYSTEMS



## SK 92672

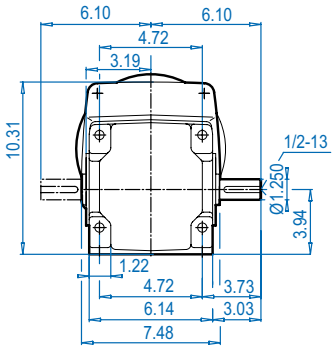


## SK 92672AX

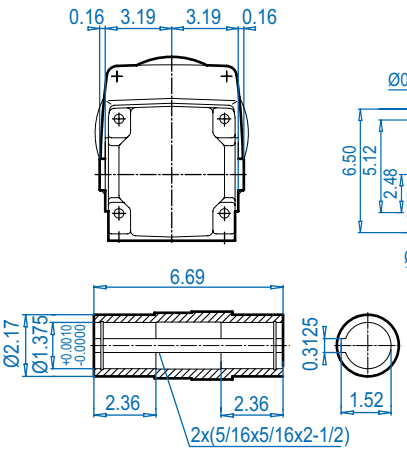


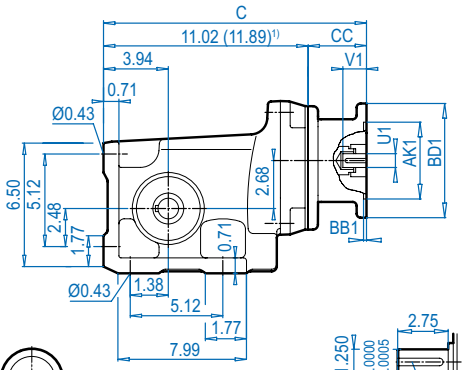


## NEMA Input

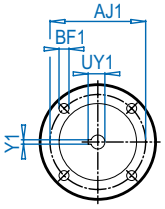


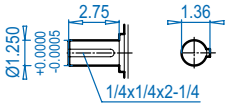


## SK 92672VF

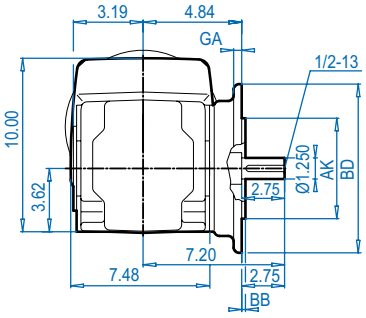


## SK 92672AF

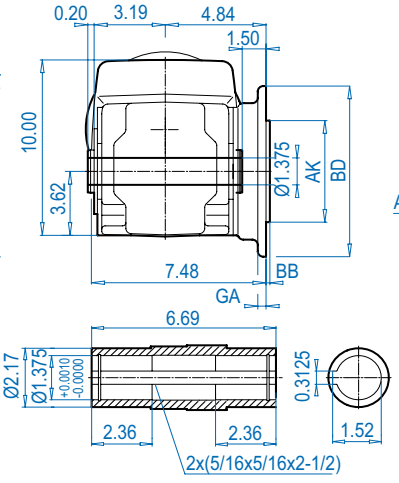


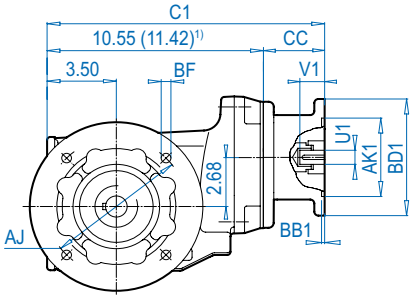


## SK 92672AB ⇨🕮 574

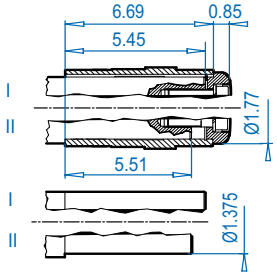


### Mounting flange

| BD (mm) | AJ | AK | BB | BF | GA |
|---|---|---|---|---|---|
| 6.30 (160) | 5.12 | 4.331 + 0.0005 - 0.0004 | 0.14 | 0.35 | 0.47 |
| 7.87 (200) | 6.50 | 5.118 + 0.0005 - 0.0004 | 0.14 | 0.43 | 0.47 |

### NEMA Dimensions

| Type | AJ1 | AK1 | BB1 | BD1 | BF1 | U1 | V1 | UY1 | Y1 | C | C1 | CC |
|---|---|---|---|---|---|---|---|---|---|---|---|---|
| **56C** | 5.88 | 4.500 | 0.18 | 6.61 | 0.43 | 0.625 | 2.06 | 0.71 | 0.188 | 15.31 | 14.84 | 4.29 |
| **140TC** | 5.88 | 4.500 | 0.18 | 6.61 | 0.43 | 0.875 | 2.12 | 0.96 | 0.188 | 15.31 | 14.84 | 4.29 |
| **180TC1)** | 7.25 | 8.500 | 0.23 | 9.17 | 0.59 | 1.125 | 2.62 | 1.24 | 0.250 | 19.37 | 18.90 | 7.48 |
| **210TC1)** | 7.25 | 8.500 | 0.23 | 9.17 | 0.59 | 1.375 | 3.12 | 1.52 | 0.312 | 19.37 | 18.90 | 7.48 |


Send Quote Requests to info@automatedpt.com
Call +1(800)985-6929 To Order or Order Online At Nordgearmotors.com

DRIVESYSTEMS

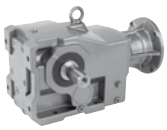



# SK 92672 + NEMA

## SK 92672AZ

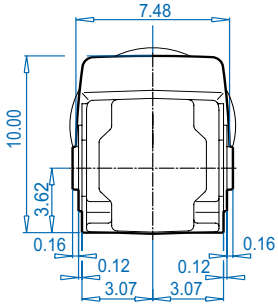


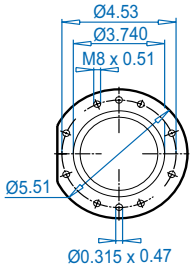


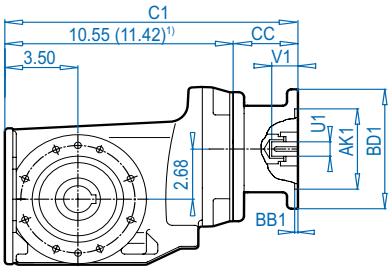


## NEMA Input

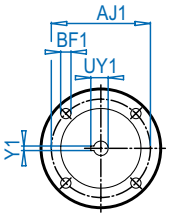


Dimensions in inches
DIMENSIONS

## SK 92672AZ**D**

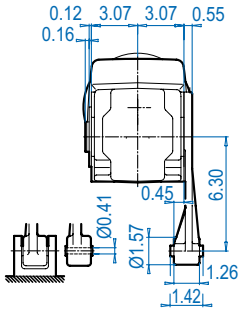


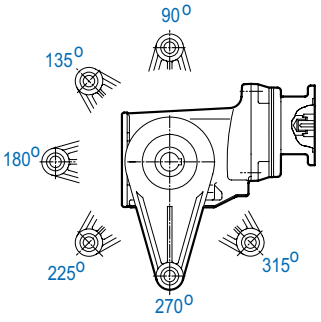


## SK 92672AZ**SH**

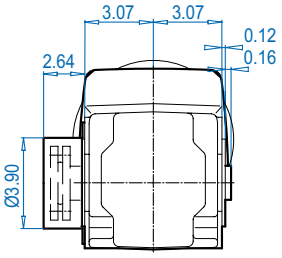


## SK 92672AZ

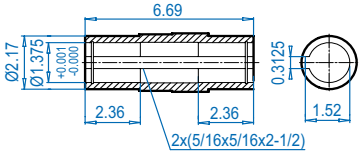


## SK 92672AZ**B** ⇨🕮 574

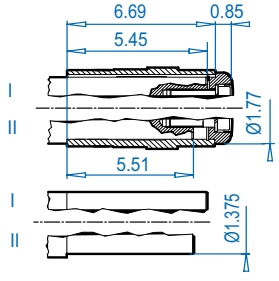


## SK 92672AZ**S** ⇨🕮 571

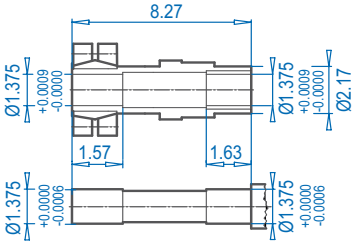


ALTERNATE SHAFTS SEE PAGES 566 - 573

### NEMA Dimensions

| Type | AJ1 | AK1 | BB1 | BD1 | BF1 | U1 | V1 | UY1 | Y1 | C1 | CC |
|---|---|---|---|---|---|---|---|---|---|---|---|
| **56C** | 5.88 | 4.500 | 0.18 | 6.61 | 0.43 | 0.625 | 2.06 | 0.71 | 0.188 | 14.84 | 4.29 |
| **140TC** | 5.88 | 4.500 | 0.18 | 6.61 | 0.43 | 0.875 | 2.12 | 0.96 | 0.188 | 14.84 | 4.29 |
| **180TC1)** | 7.25 | 8.500 | 0.23 | 9.17 | 0.59 | 1.125 | 2.62 | 1.24 | 0.250 | 18.90 | 7.48 |
| **210TC1)** | 7.25 | 8.500 | 0.23 | 9.17 | 0.59 | 1.375 | 3.12 | 1.52 | 0.312 | 18.90 | 7.48 |


Send Quote Requests to info@automatedpt.com
Call +1(800)985-6929 To Order or Order Online At Nordgearmotors.com

# SK 92772 + Motor






## SK 92772

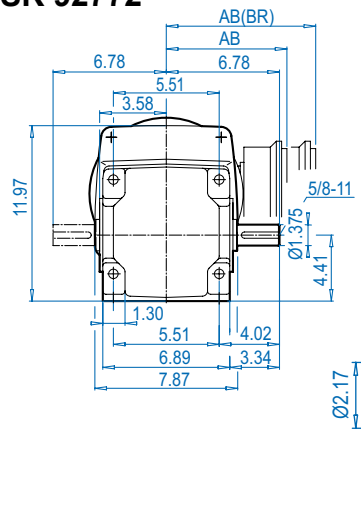


## SK 92772AX

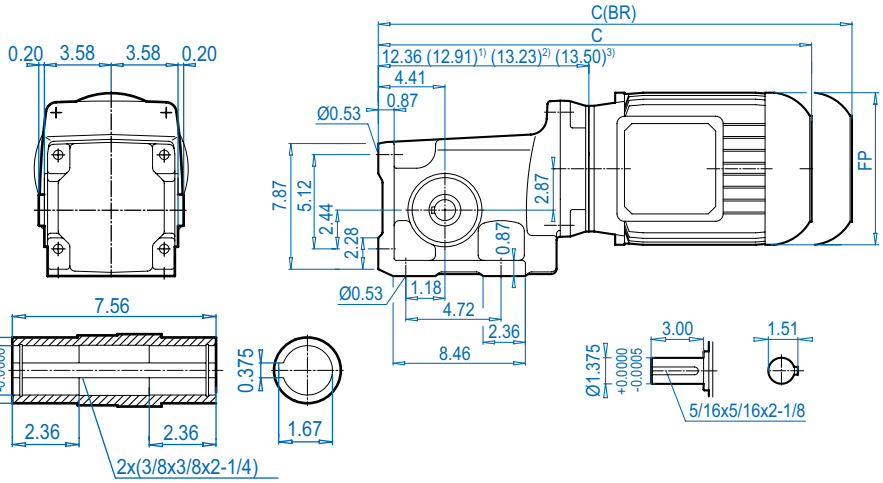


## SK 92772VF

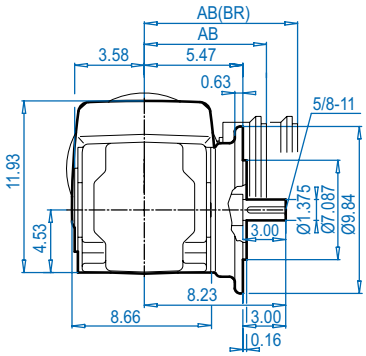


## SK 92772AF

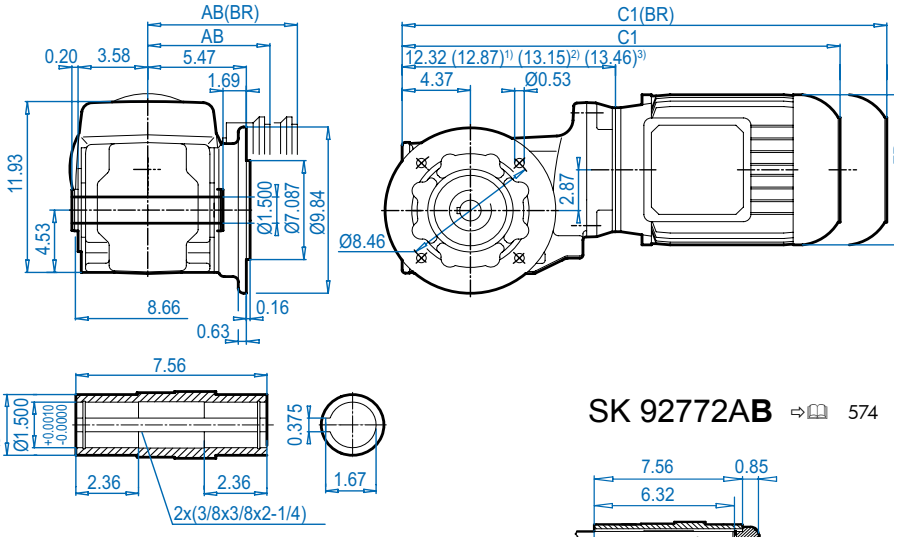


## SK 92772AB ⇨🕮 574

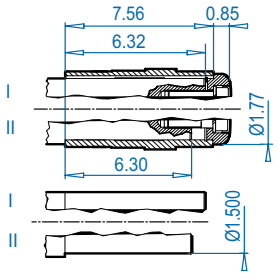


### Motor dimensions

| Standard efficiency | 80S/L | 90S/L[1)] | 100L[1)] | | 132S[3)] | For Other Connection Possibilities please see ⇨🕮 554 & 556 |
|---|---|---|---|---|---|---|
| Energy efficiency | 80LH | 90SH/LH[1)] | 100LH[1)] | 112MH[2)] | 132SH[3)] | |
| AB | 5.59 | 5.79 | 6.65 | 7.05 | 8.03 |  |
| AB (BR) | 5.63 | 5.83 | 6.26 | 6.69 | 7.72 | |
| C1 | 21.61 | 23.74 | 24.92 | 25.98 | 29.88 | |
| C1 (BR) | 24.13 | 26.69 | 28.50 | 29.64 | 33.86 | |
| C | 21.65 | 23.78 | 24.96 | 26.06 | 29.92 | |
| C (BR) | 24.17 | 26.73 | 28.54 | 29.72 | 33.90 | |
| FP | 6.50 | 7.20 | 7.91 | 8.98 | 10.47 | |

**(BR)** denotes Brakemotor


Send Quote Requests to info@automatedpt.com
Call +1(800)985-6929 To Order or Order Online At Nordgearmotors.com

DRIVESYSTEMS



# SK 92772 + Motor

## SK 92772AZ

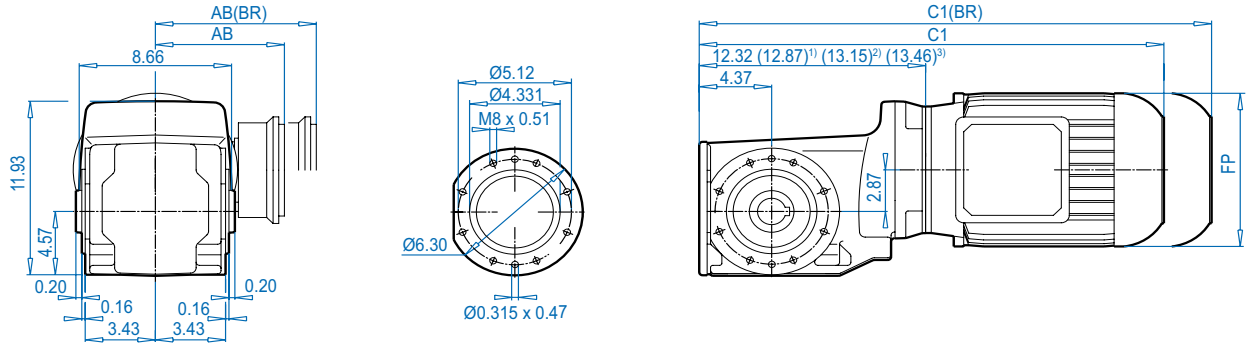


Dimensions in Inches
DIMENSIONS

## SK 92772AZ**D**

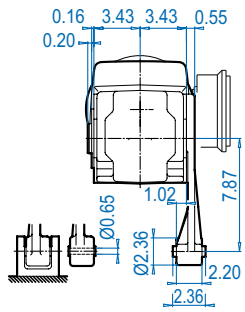


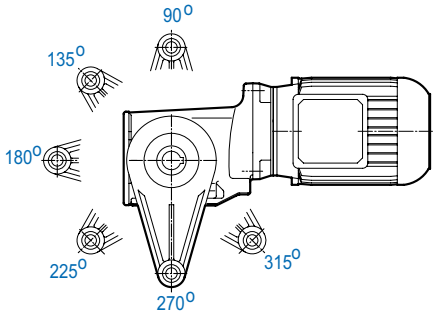


## SK 92772AZ**SH**

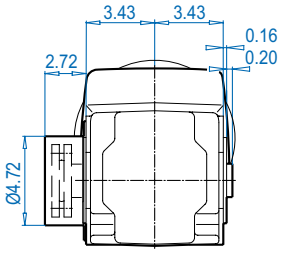


## SK 92772AZ

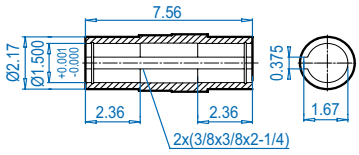


## SK 92772AZ**B** ⇨🕮 574

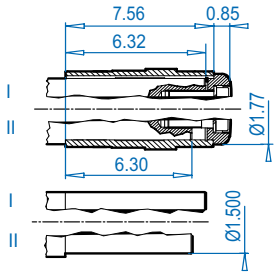


## SK 92772AZ**S** ⇨🕮 571

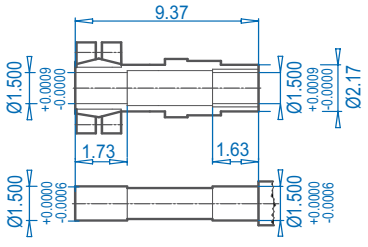


### Motor dimensions

| Standard efficiency | 80S/L | 90S/L[1)] | 100L[1)] | | 132S[3)] | For Other Connection Possibilities please see ⇨🕮 554 & 556 |
|---|---|---|---|---|---|---|
| Energy efficiency | 80LH | 90SH/LH[1)] | 100LH[1)] | 112MH[2)] | 132SH[3)] | |
| AB | 5.59 | 5.79 | 6.65 | 7.05 | 8.03 | 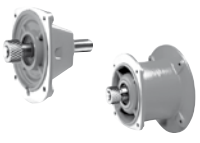 |
| AB (BR) | 5.63 | 5.83 | 6.26 | 6.69 | 7.72 | |
| C1 | 21.61 | 23.74 | 24.92 | 25.98 | 29.88 | |
| C1 (BR) | 24.13 | 26.69 | 28.50 | 29.64 | 33.86 | |
| FP | 6.50 | 7.20 | 7.91 | 8.98 | 10.47 | |

**(BR)** denotes Brakemotor

ALTERNATE SHAFTS SEE PAGES 566 - 573


Send Quote Requests to info@automatedpt.com
Call +1(800)985-6929 To Order or Order Online At Nordgearmotors.com

# SK 92772 + NEMA




## SK 92772

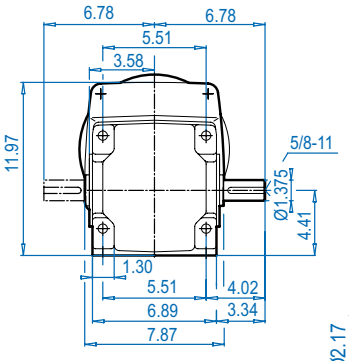


## SK 92772AX

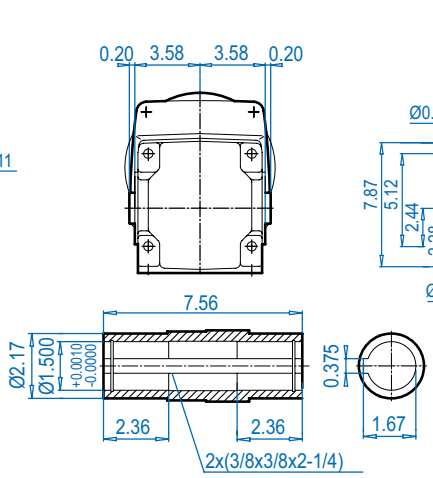


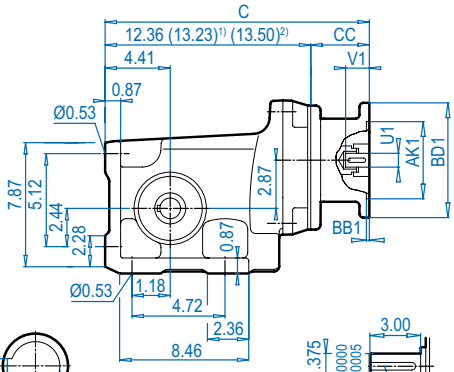


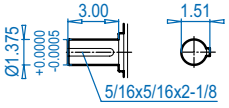


## NEMA Input

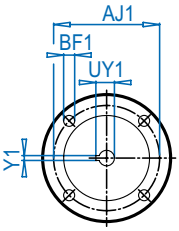


## SK 92772VF

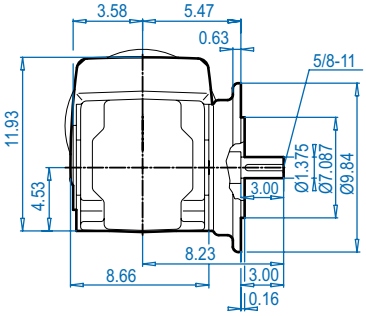


## SK 92772AF

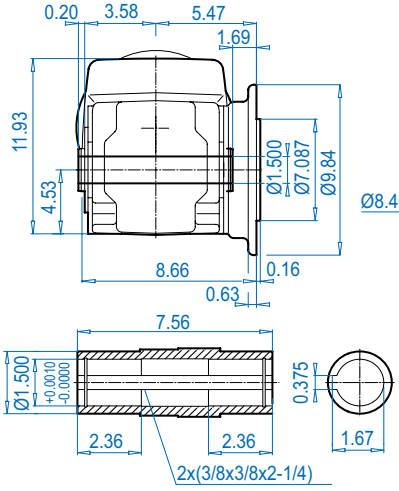


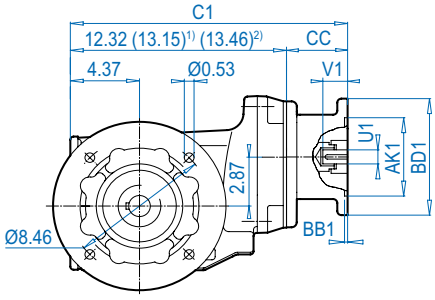


## SK 92772AX**B**(AF**B**) ⇨🕮 574

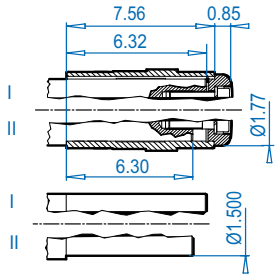


### NEMA Dimensions

| Type | AJ1 | AK1 | BB1 | BD1 | BF1 | U1 | V1 | UY1 | Y1 | C | C1 | CC |
|---|---|---|---|---|---|---|---|---|---|---|---|---|
| **56C** | 5.88 | 4.500 | 0.18 | 6.61 | 0.43 | 0.625 | 2.06 | 0.71 | 0.188 | 15.31 | 14.84 | 4.29 |
| **140TC** | 5.88 | 4.500 | 0.18 | 6.61 | 0.43 | 0.875 | 2.12 | 0.96 | 0.188 | 15.31 | 14.84 | 4.29 |
| **180TC**[1)] | 7.25 | 8.500 | 0.23 | 9.17 | 0.59 | 1.125 | 2.62 | 1.24 | 0.250 | 19.37 | 18.90 | 7.48 |
| **210TC**[1] | 7.25 | 8.500 | 0.23 | 9.17 | 0.59 | 1.375 | 3.12 | 1.52 | 0.312 | 19.37 | 18.90 | 7.48 |
| **250TC** | 7.25 | 8.500 | 0.23 | 9.17 | 0.59 | 1.625 | 3.75 | 1.80 | 0.375 | 21.59 | 21.54 | 8.09 |




Send Quote Requests to info@automatedpt.com
Call +1(800)985-6929 To Order or Order Online At Nordgearmotors.com

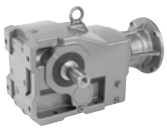


# SK 92772 + NEMA

## SK 92772AZ

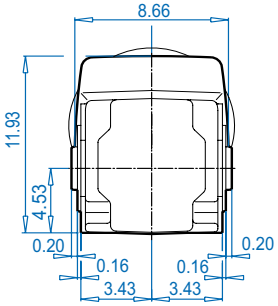


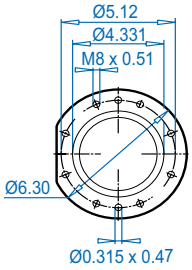


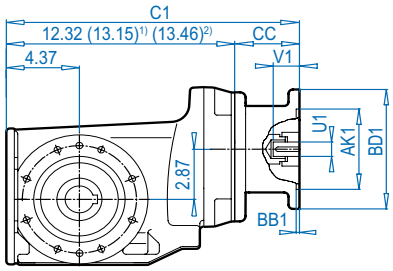


## NEMA Input

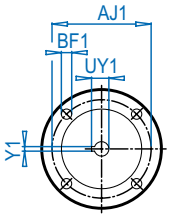


Dimensions in inches
DIMENSIONS

## SK 92772AZ**D**

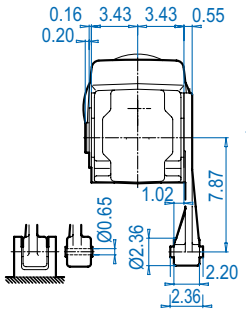


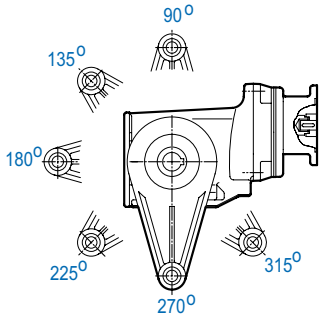


## SK 92772AZ**SH**

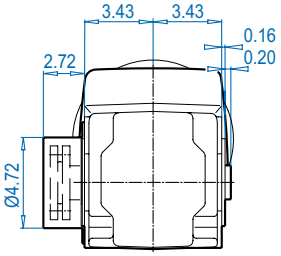


## SK 92772AZ

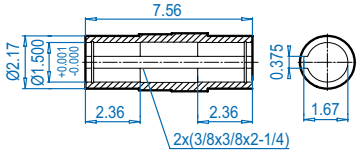


## SK 92772AZ**B** ⇨🕮 574

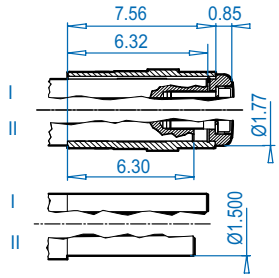


## SK 92772AZ**S** ⇨🕮 571

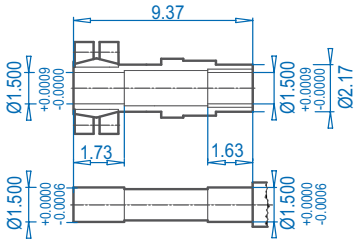


### NEMA Dimensions

| Type | AJ1 | AK1 | BB1 | BD1 | BF1 | U1 | V1 | UY1 | Y1 | C1 | CC |
|---|---|---|---|---|---|---|---|---|---|---|---|
| **56C** | 5.88 | 4.500 | 0.18 | 6.61 | 0.43 | 0.625 | 2.06 | 0.71 | 0.188 | 14.84 | 4.29 |
| **140TC** | 5.88 | 4.500 | 0.18 | 6.61 | 0.43 | 0.875 | 2.12 | 0.96 | 0.188 | 14.84 | 4.29 |
| **180TC**[1)] | 7.25 | 8.500 | 0.23 | 9.17 | 0.59 | 1.125 | 2.62 | 1.24 | 0.250 | 18.90 | 7.48 |
| **210TC**[1] | 7.25 | 8.500 | 0.23 | 9.17 | 0.59 | 1.375 | 3.12 | 1.52 | 0.312 | 18.90 | 7.48 |
| **210TC** | 7.25 | 8.500 | 0.23 | 9.17 | 0.59 | 1.625 | 3.75 | 1.80 | 0.375 | 21.54 | 8.09 |

ALTERNATE SHAFTS SEE PAGES 566 - 573


Send Quote Requests to info@automatedpt.com
Call +1(800)985-6929 To Order or Order Online At Nordgearmotors.com

# SK 9012.1 + Motor




DRIVESYSTEMS

DIMENSIONS
Dimensions in Inches
ALTERNATE SHAFTS SEE PAGES 566 - 573

## SK 9012.1

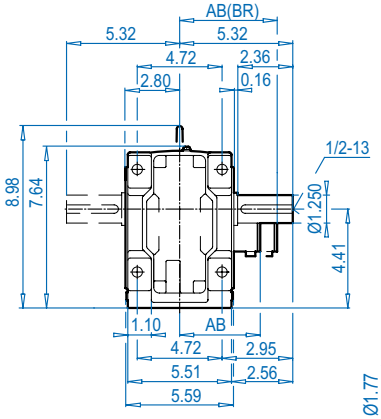


## SK 9012.1AX

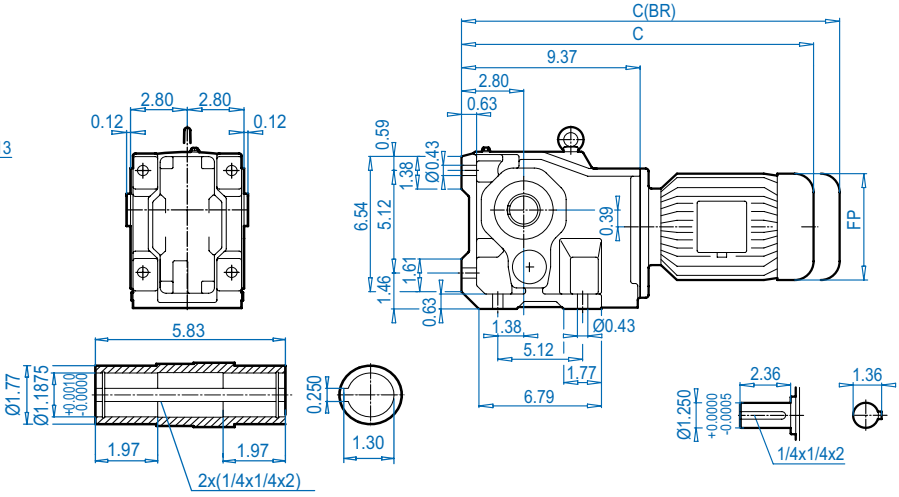


## SK 9012.1VF

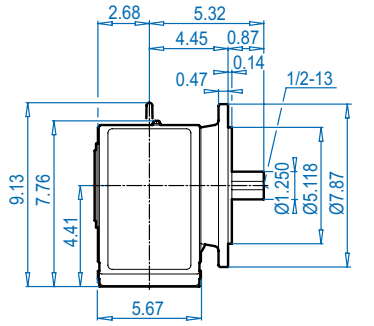


## SK 9012.1AF

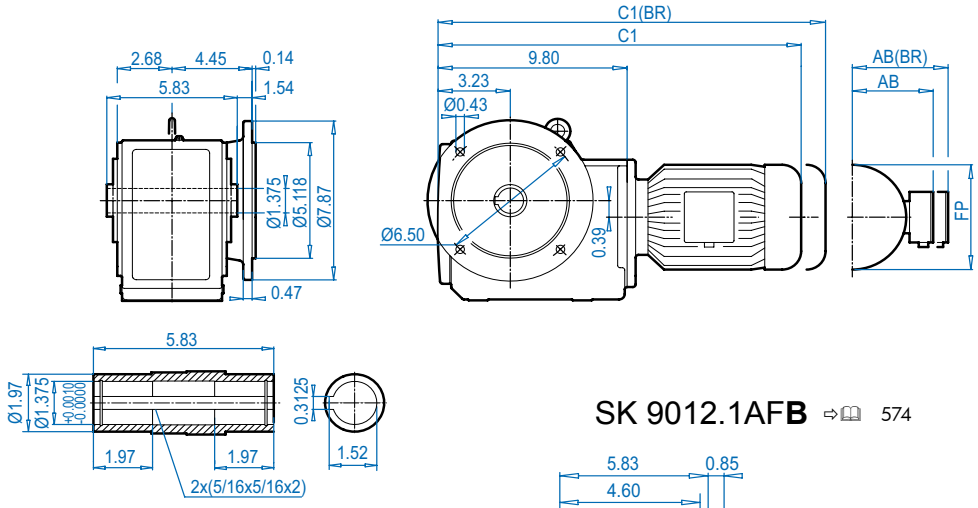


## SK 9012.1AX**B** ⇨🕮 574

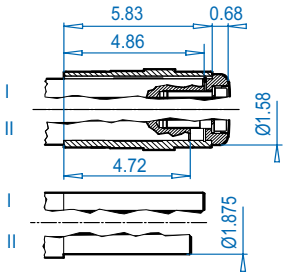


## SK 9012.1AF**B** ⇨🕮 574

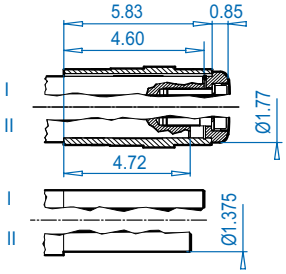


### Motor dimensions

| Standard efficiency | 63S/L | 71S/L | 80S/L | 90S/L | 100L | | For Other Connection Possibilities please see ⇨🕮 555 & 557 |
|---|---|---|---|---|---|---|---|
| Energy efficiency | | | 80LH | 90SH/LH | 100LH | 112MH | |
| AB | 4.53 | 4.88 | 5.59 | 5.79 | 6.65 | 7.05 |  |
| AB (BR) | 4.84 | 5.24 | 5.63 | 5.83 | 6.26 | 6.69 | |
| C1 | 17.52 | 19.09 | 20.08 | 21.69 | 22.87 | 23.78 | |
| C1 (BR) | 19.72 | 21.38 | 22.60 | 24.65 | 26.46 | 27.44 | |
| C | 17.09 | 18.66 | 19.65 | 21.26 | 22.44 | 23.35 | |
| C (BR) | 19.29 | 20.94 | 22.17 | 24.21 | 26.02 | 27.01 | |
| FP | 5.12 | 5.71 | 6.50 | 7.20 | 7.91 | 8.98 | |

**(BR)** denotes Brakemotor


Send Quote Requests to info@automatedpt.com
Call +1(800)985-6929 To Order or Order Online At Nordgearmotors.com

DRIVESYSTEMS





# SK 9012.1 + Motor

## SK 9012.1AZ

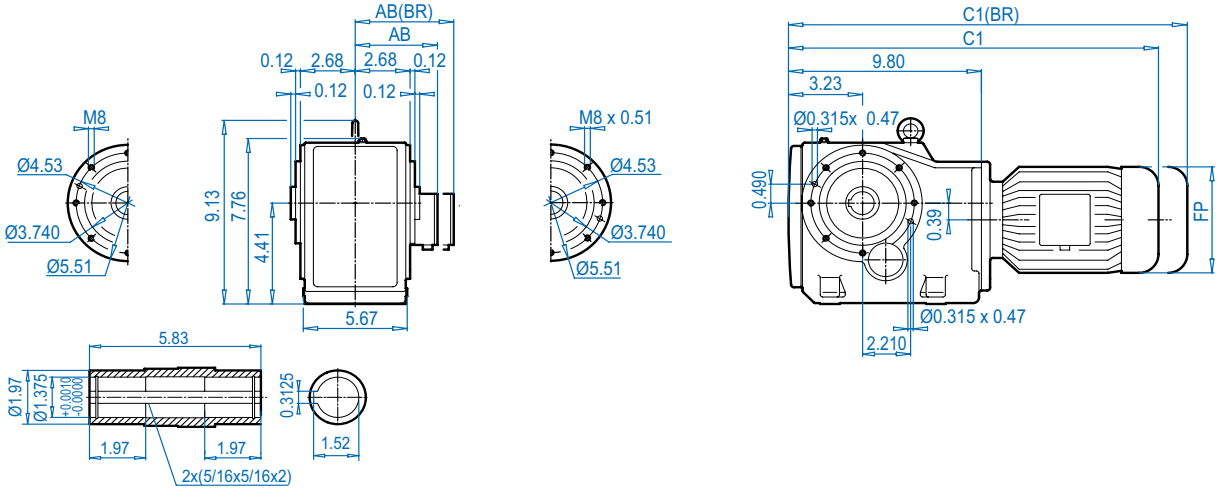


## SK 9012.1AZ**K**

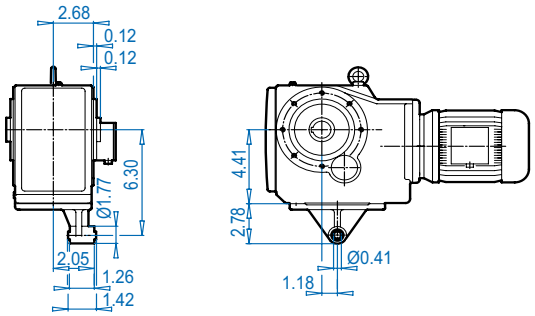


## SK 9012.1AZ**D**

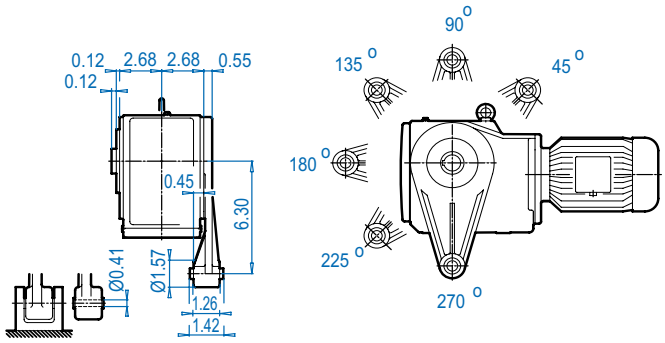


## SK 9012.1AZ**B** ⇨🕮 574

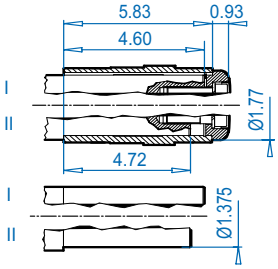


## SK 9012.1AZ**S** ⇨🕮 571

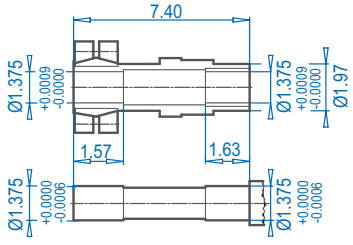


## SK 9012.1AZ**SH**

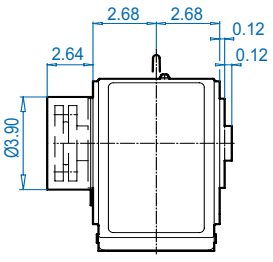


### Motor dimensions

| Standard efficiency | 63S/L | 71S/L | 80S/L | 90S/L | 100L | | For Other Connection Possibilities please see ⇨🕮 555 & 557 |
|---|---|---|---|---|---|---|---|
| Energy efficiency | | | 80LH | 90SH/LH | 100LH | 112MH | |
| AB | 4.53 | 4.88 | 5.59 | 5.79 | 6.65 | 7.05 | 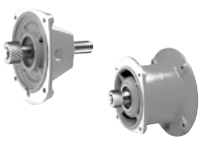 |
| AB (BR) | 4.84 | 5.24 | 5.63 | 5.83 | 6.26 | 6.69 | |
| C1 | 17.52 | 19.09 | 20.08 | 21.69 | 22.87 | 23.78 | |
| C1 (BR) | 19.72 | 21.38 | 22.60 | 24.65 | 26.46 | 27.44 | |
| FP | 5.12 | 5.71 | 6.50 | 7.20 | 7.91 | 8.98 | |

**(BR)** denotes Brakemotor




Send Quote Requests to info@automatedpt.com
Call +1(800)985-6929 To Order or Order Online At Nordgearmotors.com

# SK 9012.1 + NEMA




DRIVESYSTEMS

## SK 9012.1

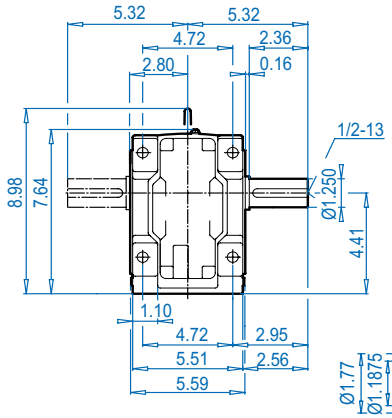


## SK 9012.1AX

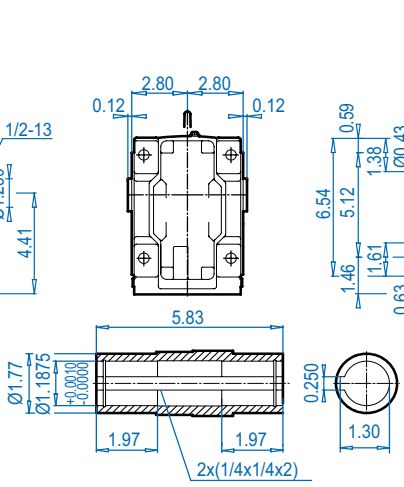


## NEMA Input

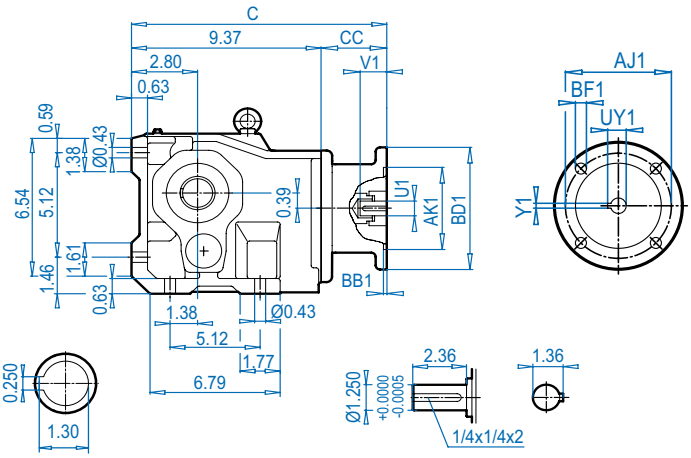


DIMENSIONS
Dimensions in Inches

## SK 9012.1VF

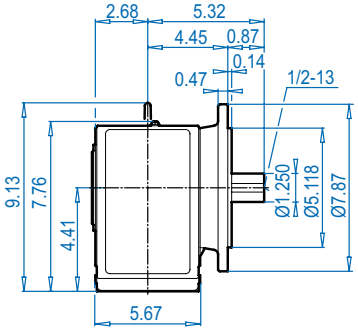


## SK 9012.1AF

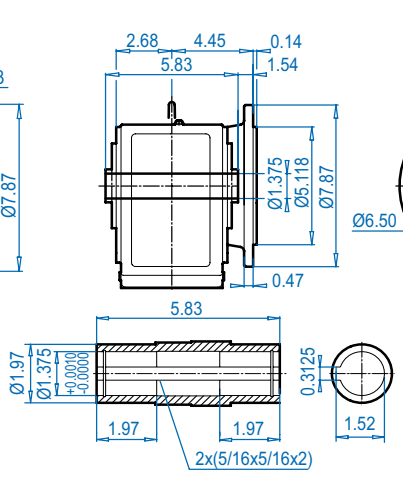


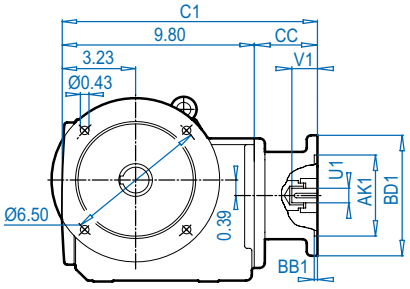


ALTERNATE SHAFTS SEE PAGES 566 - 573

## SK 9012.1AXB ⇨🕮 574

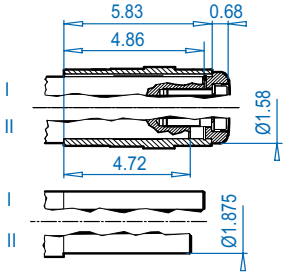


## SK 9012.1AFB ⇨🕮 574

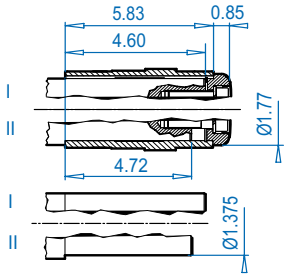


### NEMA Dimensions

| Type | AJ1 | AK1 | BB1 | BD1 | BF1 | U1 | V1 | UY1 | Y1 | C | C1 | CC |
|---|---|---|---|---|---|---|---|---|---|---|---|---|
| **56C** | 5.88 | 4.500 | 0.18 | 6.54 | 0.43 | 0.625 | 2.06 | 0.71 | 0.188 | 13.87 | 14.30 | 4.45 |
| **140TC** | 5.88 | 4.500 | 0.18 | 6.54 | 0.43 | 0.875 | 2.12 | 0.96 | 0.188 | 13.87 | 14.40 | 4.45 |
| **180TC** | 7.25 | 8.500 | 0.23 | 9.17 | 0.59 | 1.125 | 2.62 | 1.24 | 0.250 | 15.02 | 15.45 | 5.65 |


Send Quote Requests to info@automatedpt.com
Call +1(800)985-6929 To Order or Order Online At Nordgearmotors.com

DRIVESYSTEMS

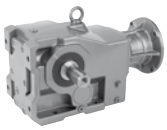



# SK 9012.1 + NEMA

## SK 9012.1AZ

**NEMA Input**

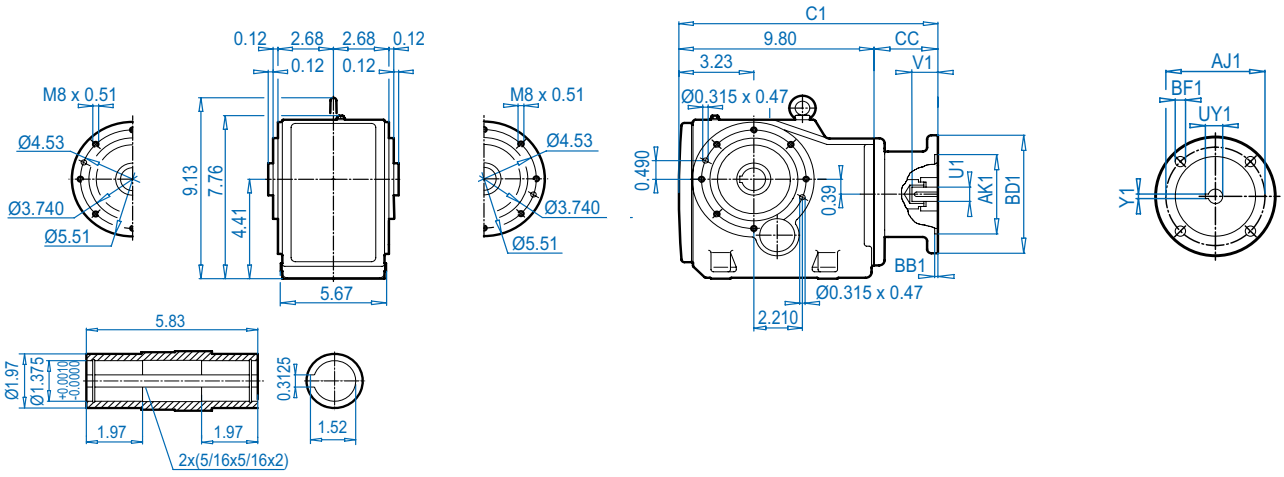


## SK 9012.1AZ**K**

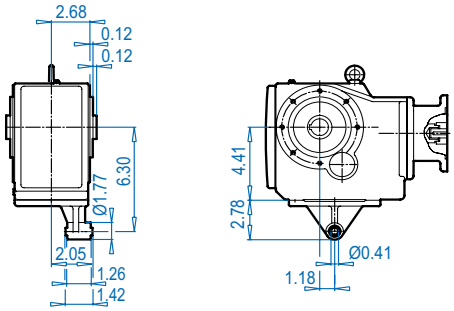


## SK 9012.1AZ**D**

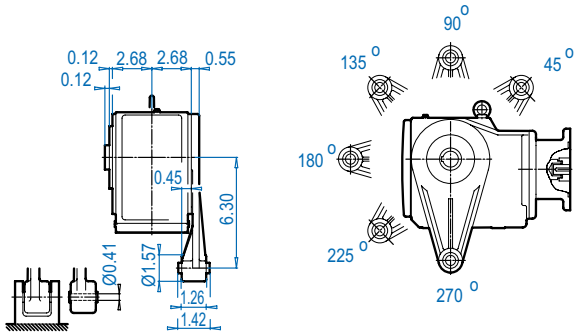


## SK 9012.1AZ**B** ⇨🕮 574

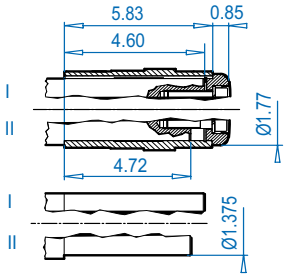


## SK 9012.1AZ**S** ⇨🕮 571

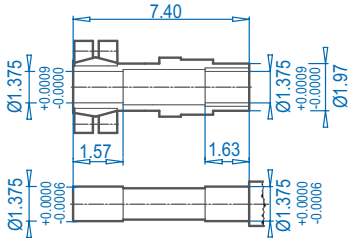


## SK 9012.1AZ**SH**

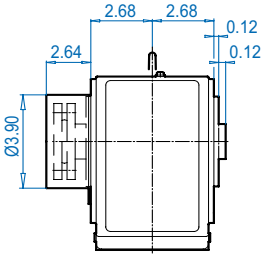


**NEMA Dimensions**

| Type | AJ1 | AK1 | BB1 | BD1 | BF1 | U1 | V1 | UY1 | Y1 | C1 | CC |
|---|---|---|---|---|---|---|---|---|---|---|---|
| **56C** | 5.88 | 4.500 | 0.18 | 6.54 | 0.43 | 0.625 | 2.06 | 0.71 | 0.188 | 14.30 | 4.45 |
| **140TC** | 5.88 | 4.500 | 0.18 | 6.54 | 0.43 | 0.875 | 2.12 | 0.96 | 0.188 | 14.30 | 4.45 |
| **180TC** | 7.25 | 8.500 | 0.23 | 9.17 | 0.59 | 1.125 | 2.62 | 1.24 | 0.250 | 15.45 | 5.65 |




Send Quote Requests to info@automatedpt.com
Call +1(800)985-6929 To Order or Order Online At Nordgearmotors.com

# SK 9013.1 + Motor




DRIVESYSTEMS

DIMENSIONS
Dimensions in Inches

## SK 9013.1

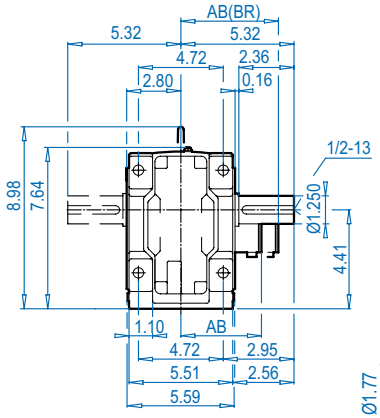


## SK 9013.1AX

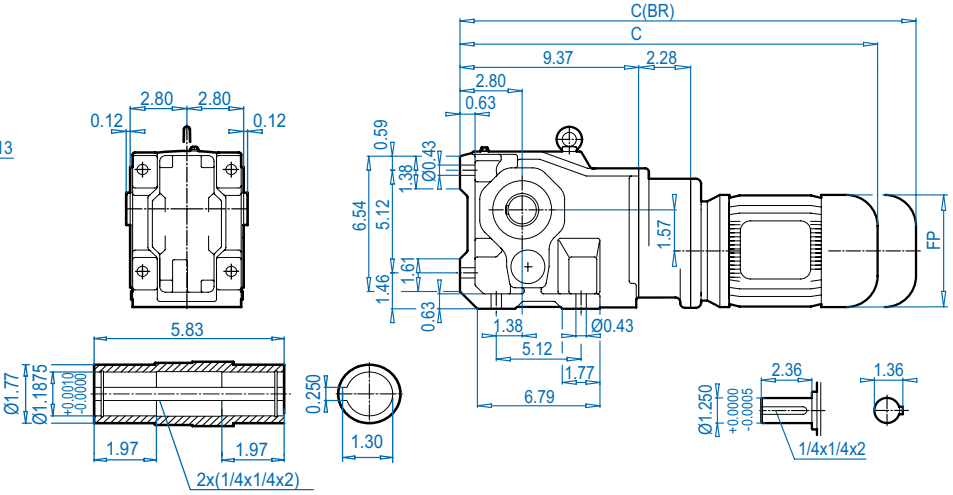


## SK 9013.1VF

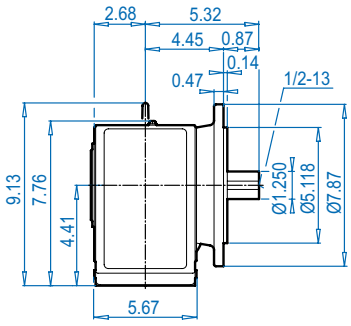


## SK 9013.1AF

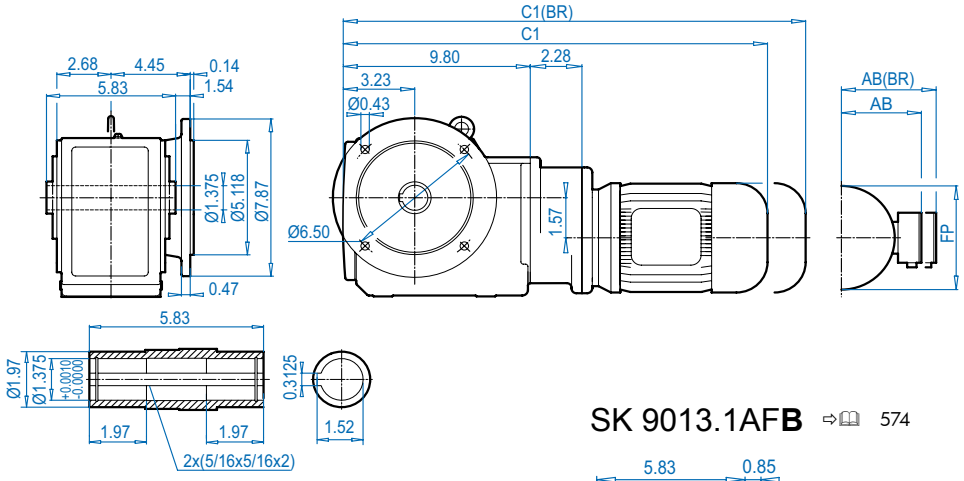


## SK 9013.1AX**B** ⇨🕮 574

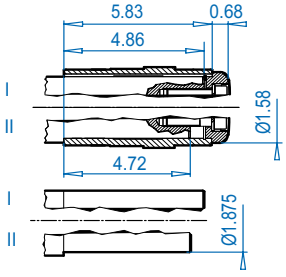


## SK 9013.1AF**B** ⇨🕮 574

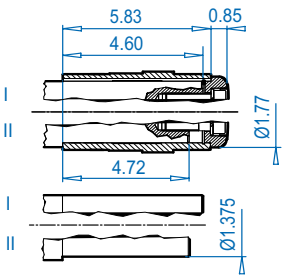


ALTERNATE SHAFTS SEE PAGES 566 - 573

### Motor dimensions

| Standard efficiency | 63S/L | | | | For Other Connection Possibilities please see ⇨🕮 555 & 557 |
|---|---|---|---|---|---|
| Energy efficiency | | | | | |
| AB | 4.53 | | | |  |
| AB (BR) | 4.84 | | | | |
| C1 | 19.80 | | | | |
| C1 (BR) | 22.01 | | | | |
| C | 19.37 | | | | |
| C (BR) | 21.57 | | | | |
| FP | 5.12 | | | | |

**(BR)** denotes Brakemotor


Send Quote Requests to info@automatedpt.com
Call +1(800)985-6929 To Order or Order Online At Nordgearmotors.com

DRIVESYSTEMS



# SK 9013.1 + Motor

## SK 9013.1AZ

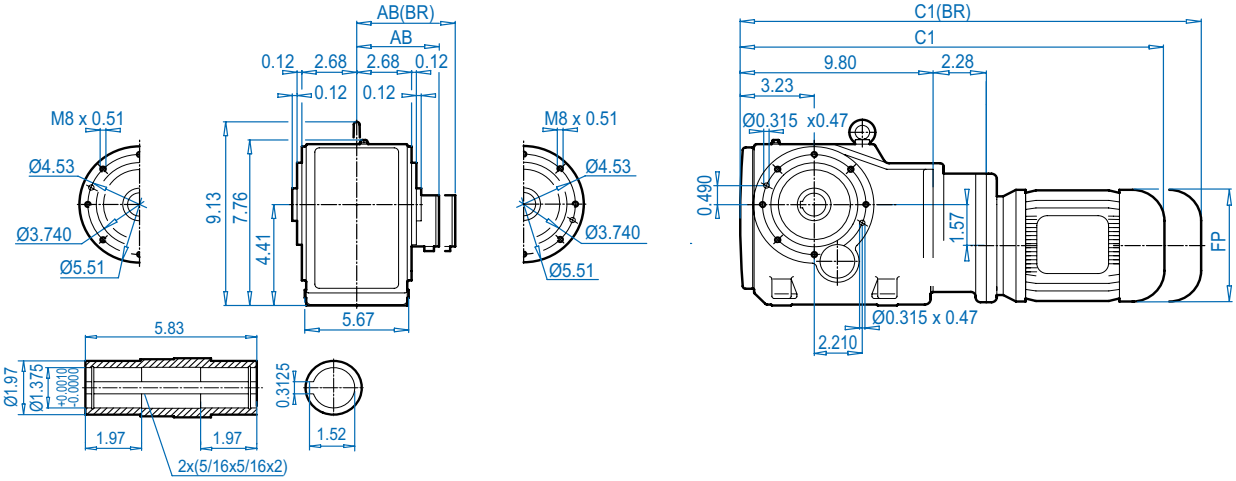


## SK 9013.1AZ**K**

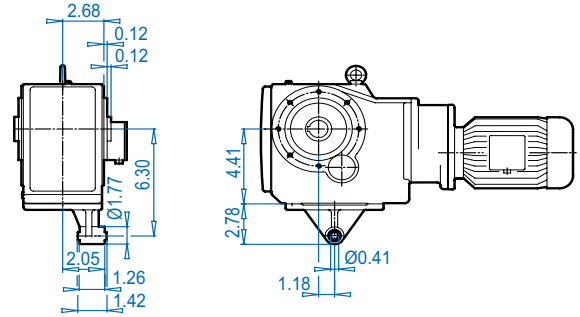


## SK 9013.1AZ**D**

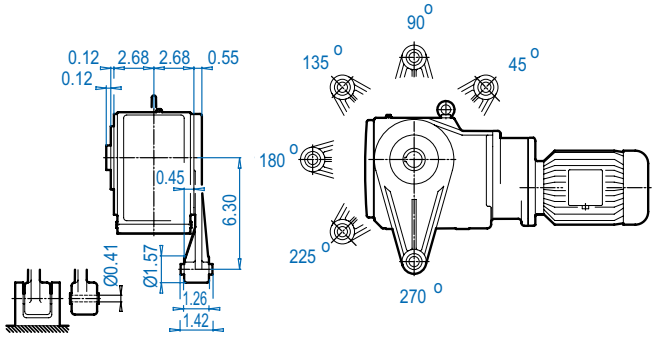


## SK 9013.1AZ**B** ⇨🕮 574

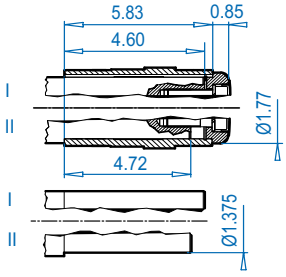


## SK 9013.1AZ**S** ⇨🕮 571

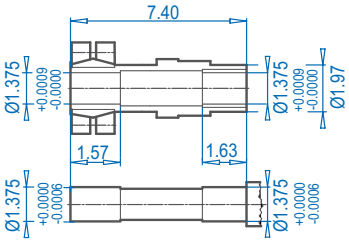


## SK 9013.1AZ**SH**

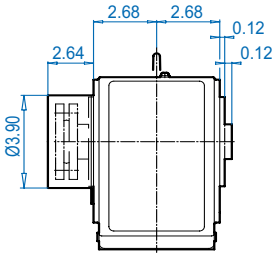


### Motor dimensions

| Standard efficiency | 63S/L | | | | For Other Connection Possibilities please see ⇨🕮 555 & 557 |
|---|---|---|---|---|---|
| Energy efficiency | | | | | |
| AB | 4.53 | | | | 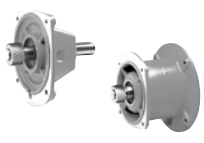 |
| AB (BR) | 4.84 | | | | |
| C1 | 19.80 | | | | |
| C1 (BR) | 22.01 | | | | |
| FP | 5.12 | | | | |

**(BR)** denotes Brakemotor

Dimensions in Inches
DIMENSIONS
ALTERNATE SHAFTS SEE PAGES 566 - 573


Send Quote Requests to info@automatedpt.com
Call +1(800)985-6929 To Order or Order Online At Nordgearmotors.com

# SK 9013.1 + NEMA




DRIVESYSTEMS

## SK 9013.1

## SK 9013.1AX

## NEMA Input

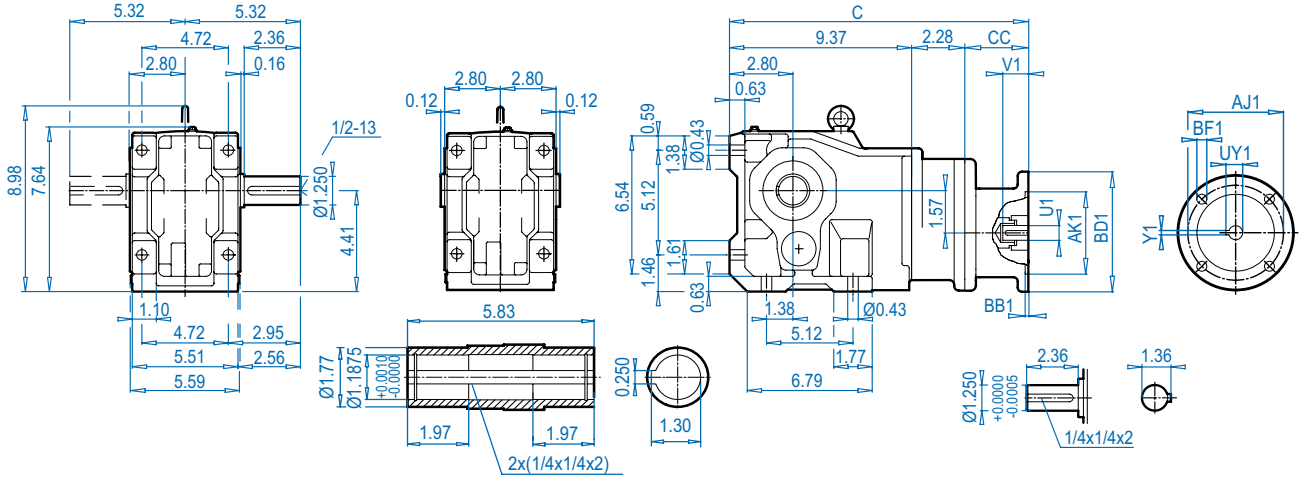


DIMENSIONS — Dimensions in Inches

## SK 9013.1VF

## SK 9013.1AF

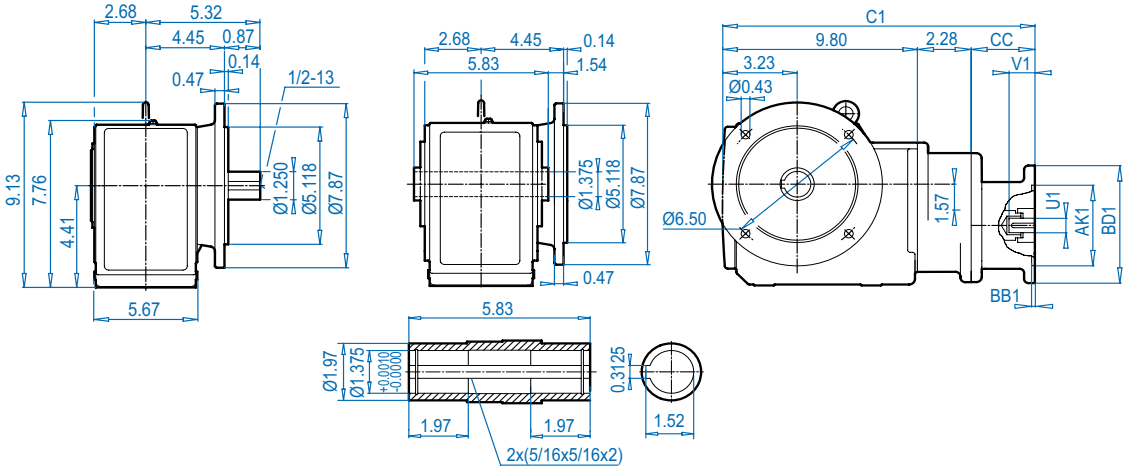


ALTERNATE SHAFTS SEE PAGES 566 - 573

## SK 9013.1AXB ⇨🕮 574

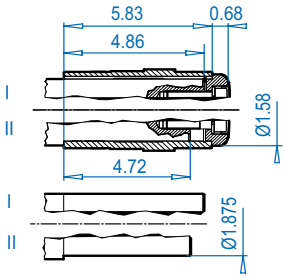


## SK 9013.1AFB ⇨🕮 574

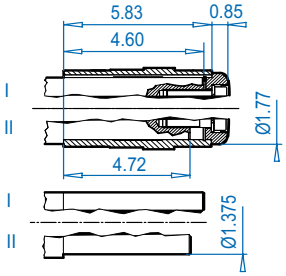


### NEMA Dimensions

| Type | AJ1 | AK1 | BB1 | BD1 | BF1 | U1 | V1 | UY1 | Y1 | C | C1 | CC |
|---|---|---|---|---|---|---|---|---|---|---|---|---|
| **56C** | 5.88 | 4.500 | 0.18 | 6.54 | 0.43 | 0.625 | 2.06 | 0.71 | 0.188 | 16.15 | 16.58 | 4.50 |


Send Quote Requests to info@automatedpt.com
Call +1(800)985-6929 To Order or Order Online At Nordgearmotors.com

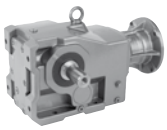


# SK 9013.1 + NEMA

## SK 9013.1AZ

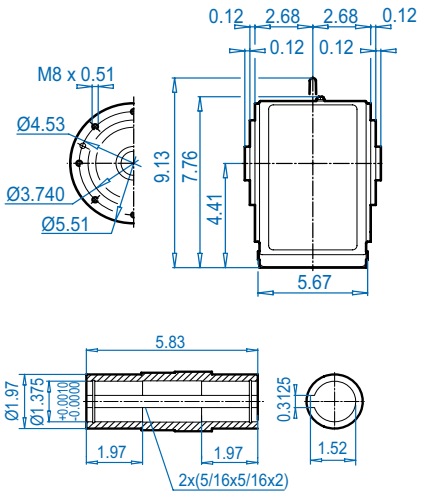


## NEMA Input

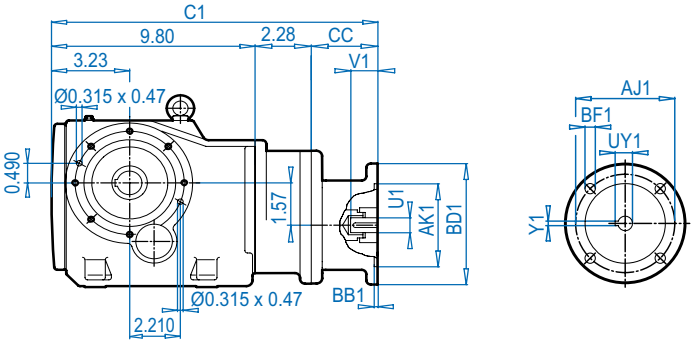


## SK 9013.1AZ**K**

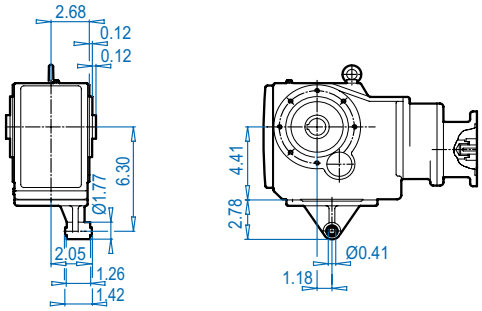


## SK 9013.1AZ**D**

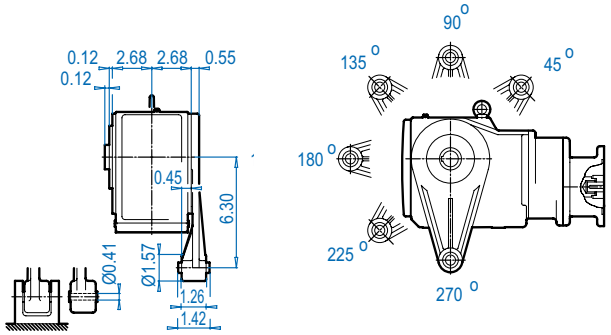


## SK 9013.1AZ**B** ⇨🕮 574

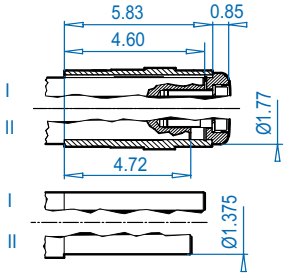


## SK 9013.1AZ**S** ⇨🕮 571

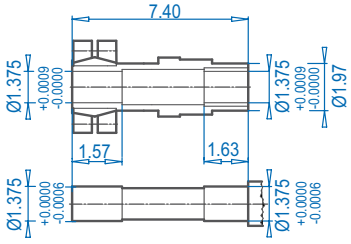


## SK 9013.1AZ**SH**

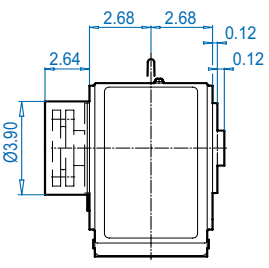


**NEMA Dimensions**

| Type | AJ1 | AK1 | BB1 | BD1 | BF1 | U1 | V1 | UY1 | Y1 | C1 | CC |
|---|---|---|---|---|---|---|---|---|---|---|---|
| **56C** | 5.88 | 4.500 | 0.18 | 6.54 | 0.43 | 0.625 | 2.06 | 0.71 | 0.188 | 16.58 | 4.50 |




Send Quote Requests to info@automatedpt.com
Call +1(800)985-6929 To Order or Order Online At Nordgearmotors.com

# SK 9016.1 + Motor




DRIVESYSTEMS

DIMENSIONS
Dimensions in Inches

## SK 9016.1

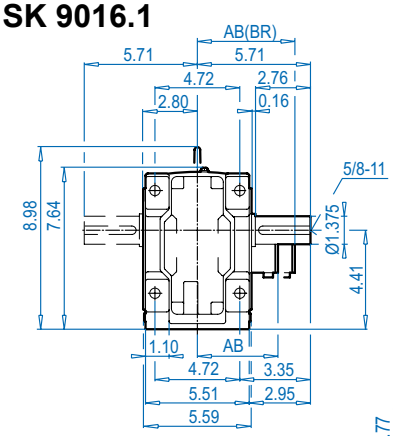


## SK 9016.1AX

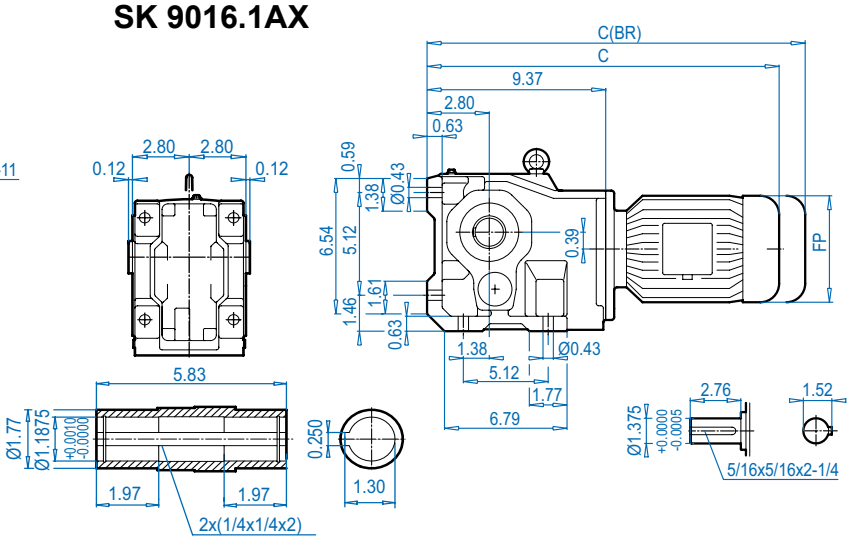


## SK 9016.1VF

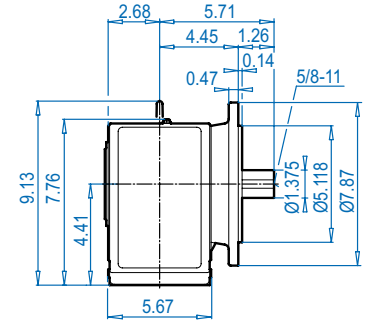


## SK 9016.1AF

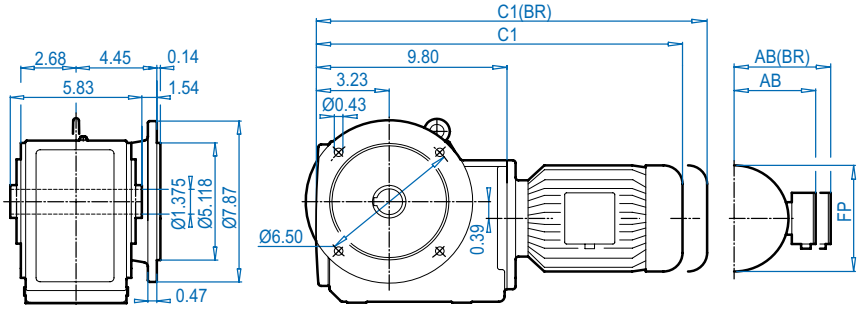


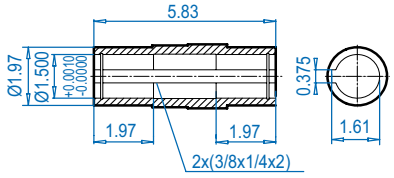


## SK 9016.1AXB ⇨🕮 574

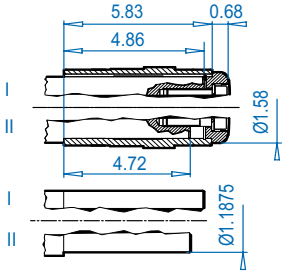


## SK 9016.1AFB ⇨🕮 574

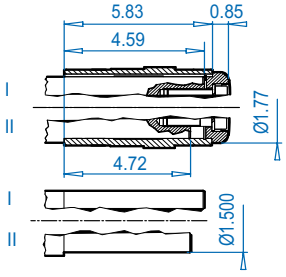


### Motor dimensions

| Standard efficiency | 63S/L | 71S/L | 80S/L | 90S/L | 100L | | For Other Connection Possibilities please see ⇨🕮 555 & 557 |
|---|---|---|---|---|---|---|---|
| Energy efficiency | | | 80LH | 90SH/LH | 100LH | 112MH | |
| AB | 4.53 | 4.88 | 5.59 | 5.79 | 6.65 | 7.05 |  |
| AB (BR) | 4.84 | 5.24 | 5.63 | 5.83 | 6.26 | 6.69 | |
| C1 | 17.52 | 19.09 | 20.08 | 21.69 | 22.87 | 23.78 | |
| C1 (BR) | 19.72 | 21.38 | 22.60 | 24.65 | 26.46 | 27.44 | |
| C | 17.09 | 18.66 | 19.65 | 21.26 | 22.44 | 23.35 | |
| C (BR) | 19.29 | 20.94 | 22.17 | 24.21 | 26.02 | 27.01 | |
| FP | 5.12 | 5.71 | 6.50 | 7.20 | 7.91 | 8.98 | |

**(BR)** denotes Brakemotor

ALTERNATE SHAFTS SEE PAGES 566 - 573


Send Quote Requests to info@automatedpt.com
Call +1(800)985-6929 To Order or Order Online At Nordgearmotors.com




# SK 9016.1 + Motor

## SK 9016.1AZ

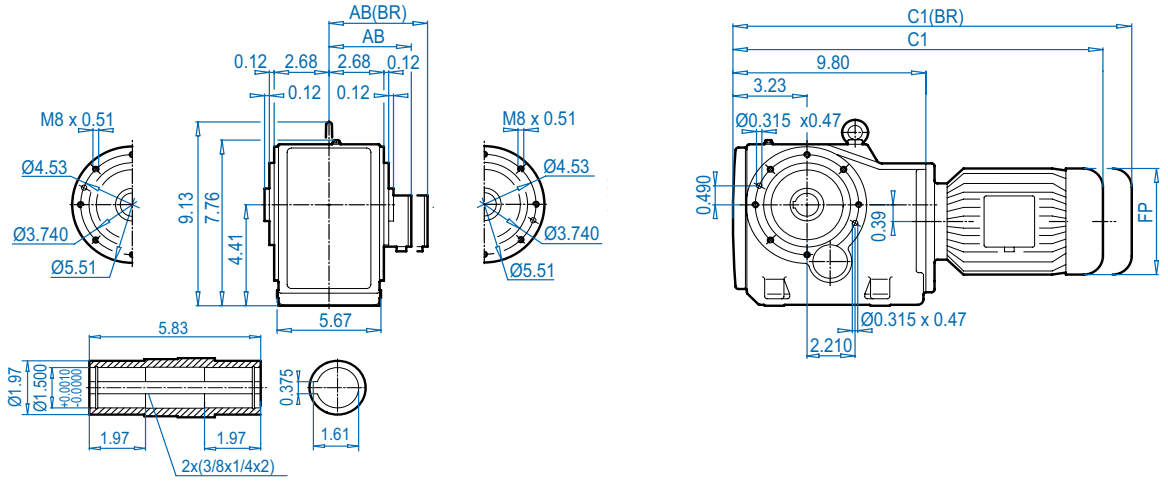


## SK 9016.1AZ**K**

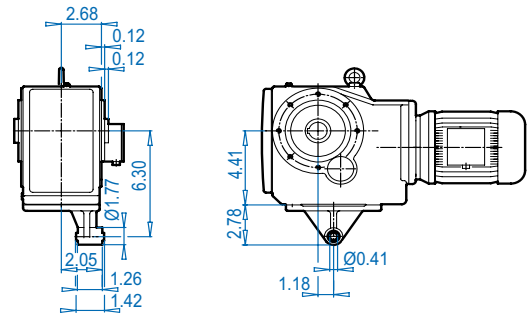


## SK 9016.1AZ**D**

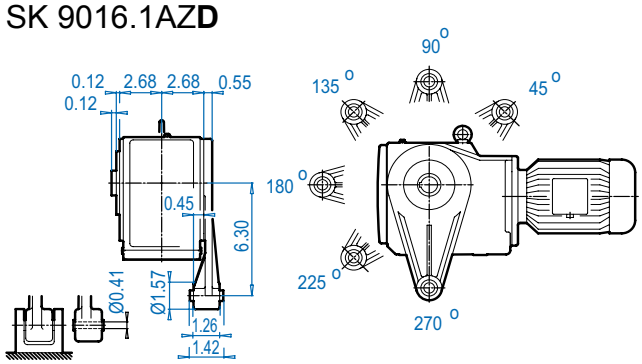


## SK 9016.1AZ**B** ⇨🕮 574

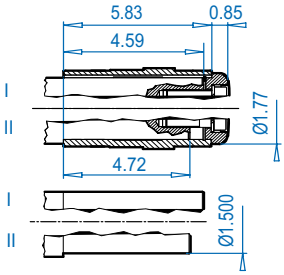


## SK 9016.1AZ**S** ⇨🕮 571

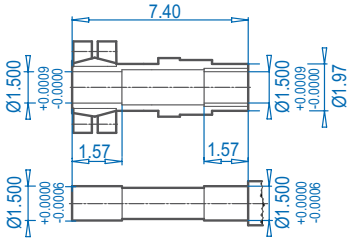


## SK 9016.1AZ**SH**

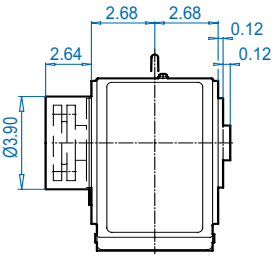


### Motor dimensions

| Standard efficiency | 63S/L | 71S/L | 80S/L | 90S/L | 100L | | For Other Connection Possibilities please see ⇨🕮 555 & 557 |
|---|---|---|---|---|---|---|---|
| Energy efficiency | | | 80LH | 90SH/LH | 100LH | 112MH | |
| AB | 4.53 | 4.88 | 5.59 | 5.79 | 6.65 | 7.05 | 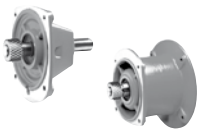 |
| AB (BR) | 4.84 | 5.24 | 5.63 | 5.83 | 6.26 | 6.69 | |
| C1 | 17.52 | 19.09 | 20.08 | 21.69 | 22.87 | 23.78 | |
| C1 (BR) | 19.72 | 21.38 | 22.60 | 24.65 | 26.46 | 27.44 | |
| FP | 5.12 | 5.71 | 6.50 | 7.20 | 7.91 | 8.98 | |

**(BR)** denotes Brakemotor




Send Quote Requests to info@automatedpt.com
Call +1(800)985-6929 To Order or Order Online At Nordgearmotors.com

# SK 9016.1 + NEMA





DRIVESYSTEMS



## SK 9016.1

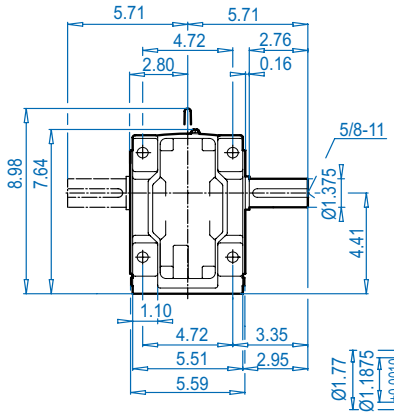


## SK 9016.1AX

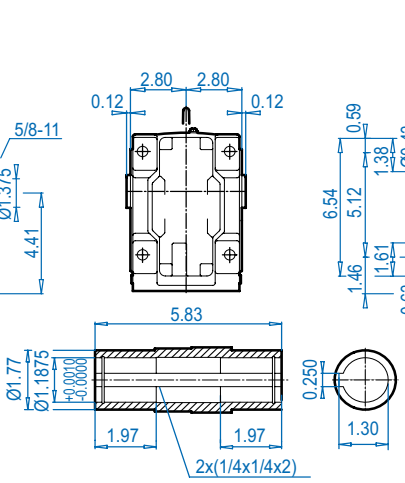


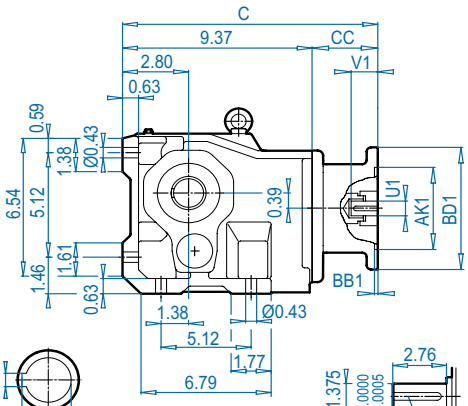


## NEMA Input

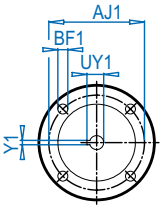


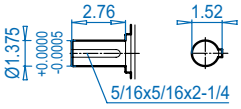


## SK 9016.1VF

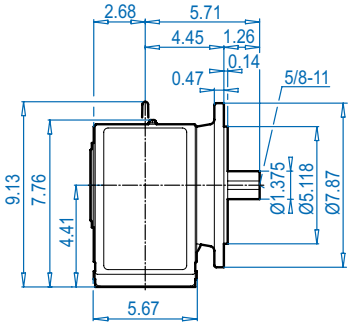


## SK 9016.1AF

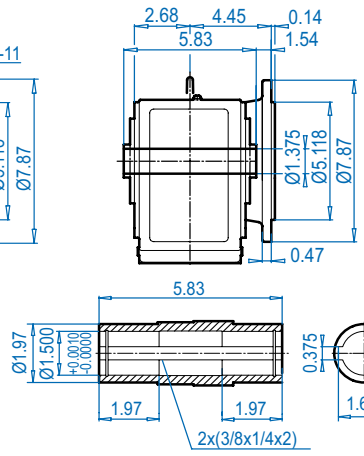


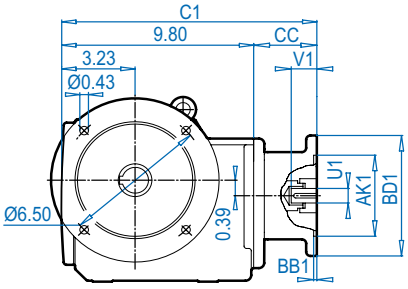


## SK 9016.1AX**B** ⇨🕮 574

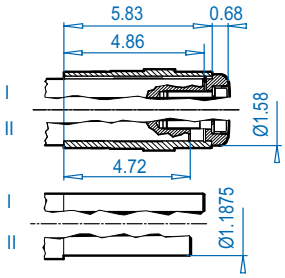


## SK 9016.1AF**B** ⇨🕮 574

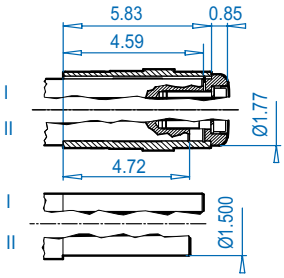


ALTERNATE SHAFTS SEE PAGES 566 - 573

### NEMA Dimensions

| Type | AJ1 | AK1 | BB1 | BD1 | BF1 | U1 | V1 | UY1 | Y1 | C | C1 | CC |
|---|---|---|---|---|---|---|---|---|---|---|---|---|
| **56C** | 5.88 | 4.500 | 0.18 | 6.54 | 0.43 | 0.625 | 2.06 | 0.71 | 0.188 | 13.87 | 14.30 | 4.50 |
| **140TC** | 5.88 | 4.500 | 0.18 | 6.54 | 0.43 | 0.875 | 2.12 | 0.96 | 0.188 | 13.87 | 14.40 | 4.50 |
| **180TC** | 7.25 | 8.500 | 0.23 | 9.17 | 0.59 | 1.125 | 2.62 | 1.24 | 0.250 | 15.02 | 15.45 | 5.65 |


Send Quote Requests to info@automatedpt.com
Call +1(800)985-6929 To Order or Order Online At Nordgearmotors.com

DRIVESYSTEMS





# SK 9016.1 + NEMA

## SK 9016.1AZ

### NEMA Input

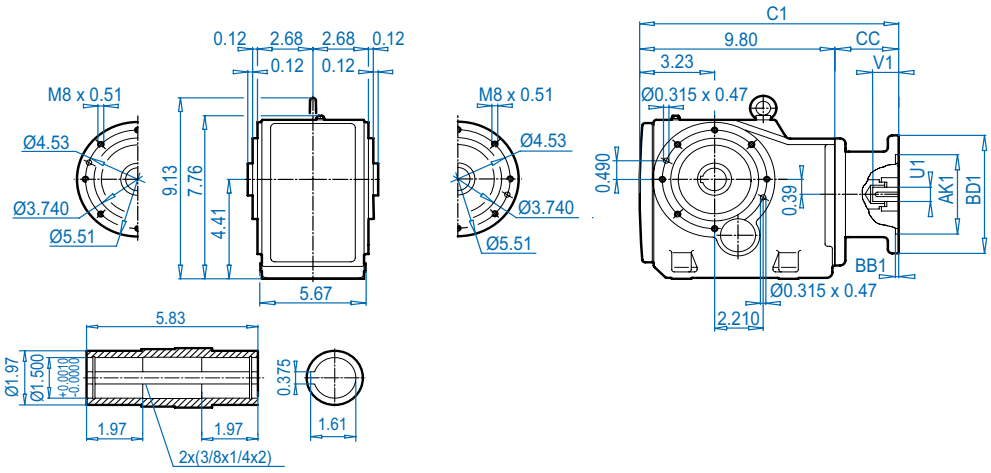


Dimensions in Inches
DIMENSIONS

## SK 9016.1AZ**K**

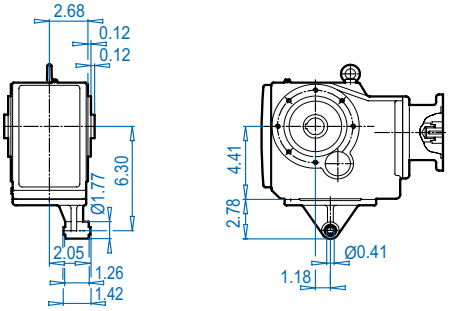


## SK 9016.1AZ**D**

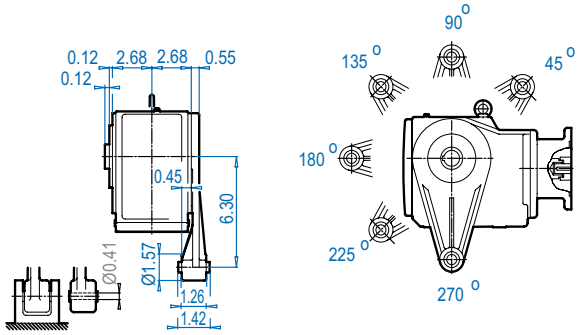


## SK 9016.1AZ**B** ⇨🕮 574

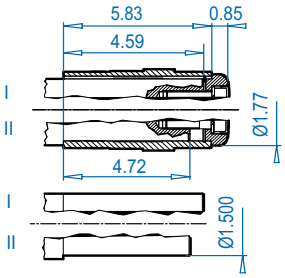


## SK 9016.1AZ**S** ⇨🕮 571

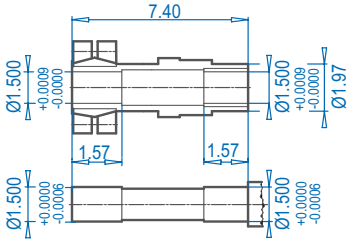


## SK 9016.1AZ**SH**

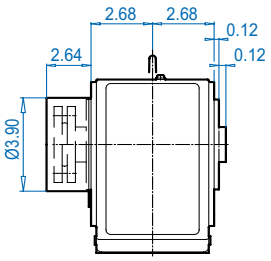


### NEMA Dimensions

| Type | AJ1 | AK1 | BB1 | BD1 | BF1 | U1 | V1 | UY1 | Y1 | C1 | CC |
|---|---|---|---|---|---|---|---|---|---|---|---|
| **56C** | 5.88 | 4.500 | 0.18 | 6.54 | 0.43 | 0.625 | 2.06 | 0.71 | 0.188 | 14.30 | 4.50 |
| **140TC** | 5.88 | 4.500 | 0.18 | 6.54 | 0.43 | 0.875 | 2.12 | 0.96 | 0.188 | 14.30 | 4.50 |
| **180TC** | 7.25 | 8.500 | 0.23 | 9.17 | 0.59 | 1.125 | 2.62 | 1.24 | 0.250 | 15.45 | 5.65 |

ALTERNATE SHAFTS SEE PAGES 566 - 573


Send Quote Requests to info@automatedpt.com
Call +1(800)985-6929 To Order or Order Online At Nordgearmotors.com

# SK 9017.1 + Motor




DRIVESYSTEMS



## SK 9017.1

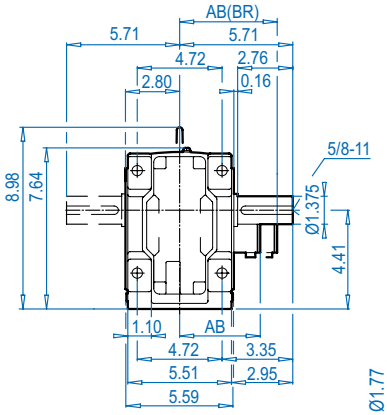


## SK 9017.1AX

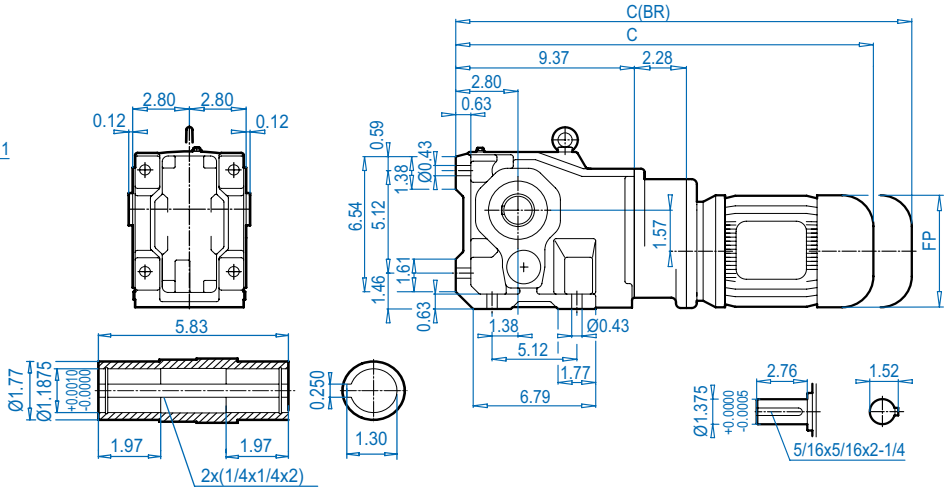


## SK 9017.1VF

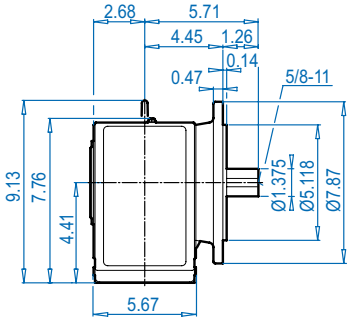


## SK 9017.1AF

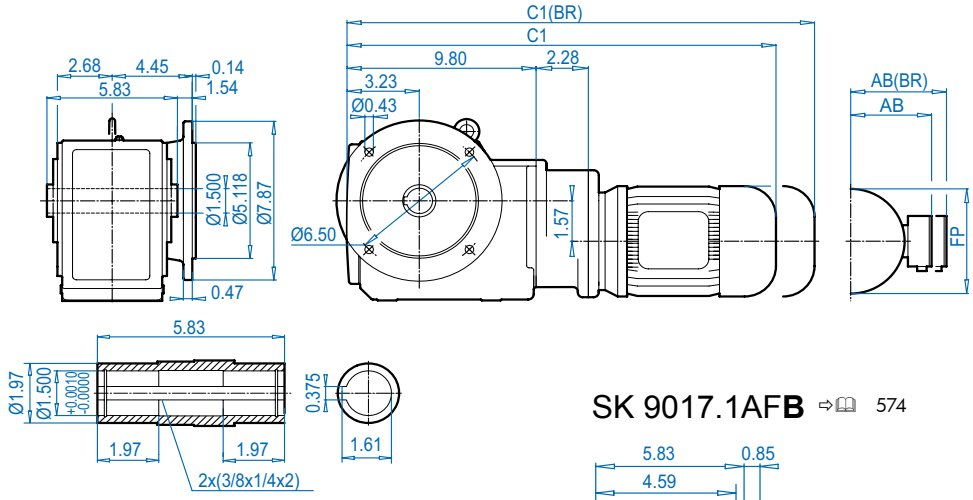


## SK 9017.1AXB ⇨🕮 574

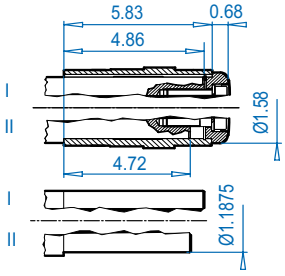


## SK 9017.1AFB ⇨🕮 574

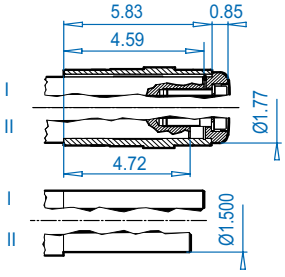


### Motor dimensions

| Standard efficiency | 63S/L | 71S/L | | | For Other Connection Possibilities please see ⇨🕮 555 & 557 |
|---|---|---|---|---|---|
| Energy efficiency | | | | | |
| AB | 4.53 | 4.88 | | | |
| AB (BR) | 4.84 | 5.24 | | | |
| C1 | 19.80 | 21.37 | | | |
| C1 (BR) | 22.01 | 23.65 | | | |
| C | 19.37 | 20.94 | | | |
| C (BR) | 21.57 | 23.23 | | | |
| FP | 5.12 | 5.71 | | | |

**(BR)** denotes Brakemotor


Send Quote Requests to info@automatedpt.com
Call +1(800)985-6929 To Order or Order Online At Nordgearmotors.com

DRIVESYSTEMS

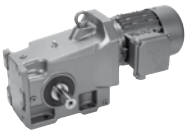



# SK 9017.1 + Motor

## SK 9017.1AZ

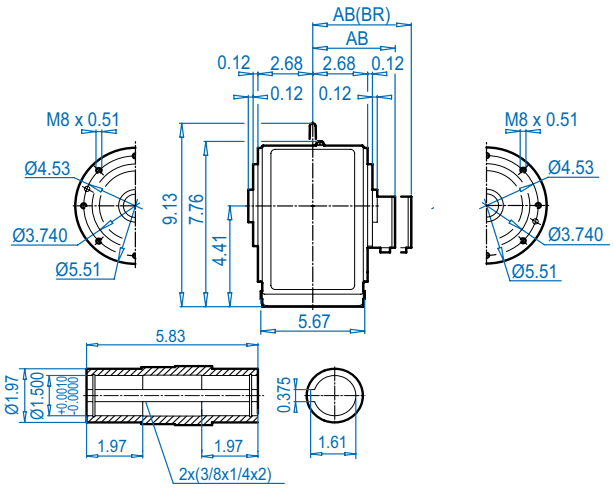


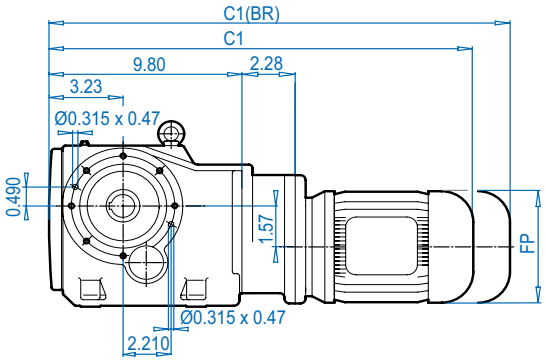


## SK 9017.1AZ**K**

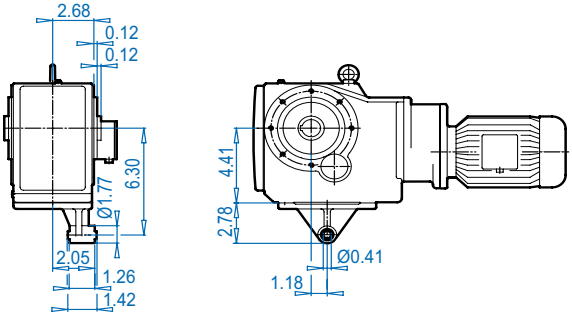


## SK 9017.1AZ**D**

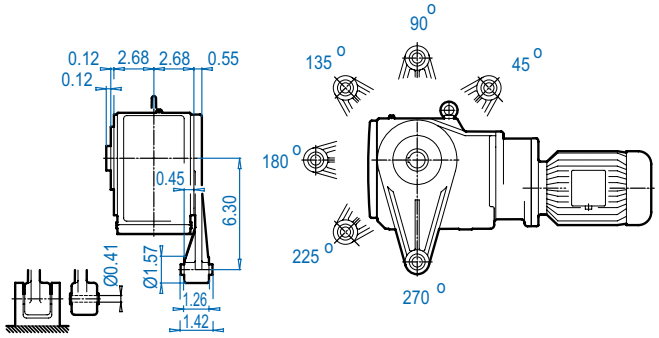


## SK 9017.1AZ**B** ⇨🕮 574

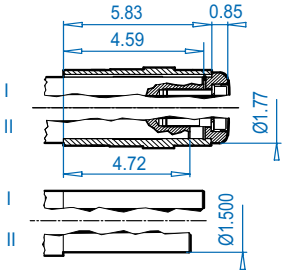


## SK 9017.1AZ**S** ⇨🕮 571

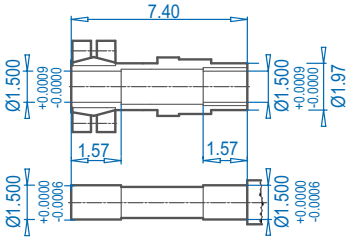


## SK 9017.1AZ**SH**

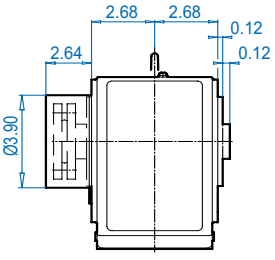


### Motor dimensions

| Standard efficiency | 63S/L | 71S/L | | | For Other Connection Possibilities please see ⇨🕮 555 & 557 |
|---|---|---|---|---|---|
| Energy efficiency | | | | | |
| AB | 4.53 | 4.88 | | | |
| AB (BR) | 4.84 | 5.24 | | | |
| C1 | 19.80 | 21.37 | | | |
| C1 (BR) | 22.01 | 23.65 | | | |
| FP | 5.12 | 5.71 | | | |

**(BR)** denotes Brakemotor




Send Quote Requests to info@automatedpt.com
Call +1(800)985-6929 To Order or Order Online At Nordgearmotors.com

# SK 9017.1 + NEMA





DRIVESYSTEMS



## SK 9017.1

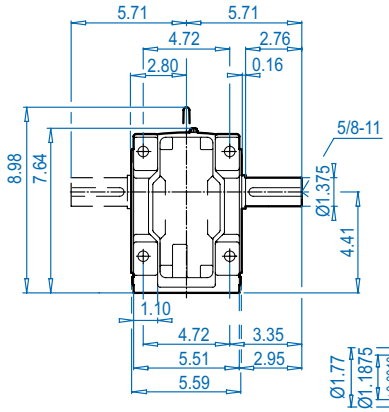


## SK 9017.1AX

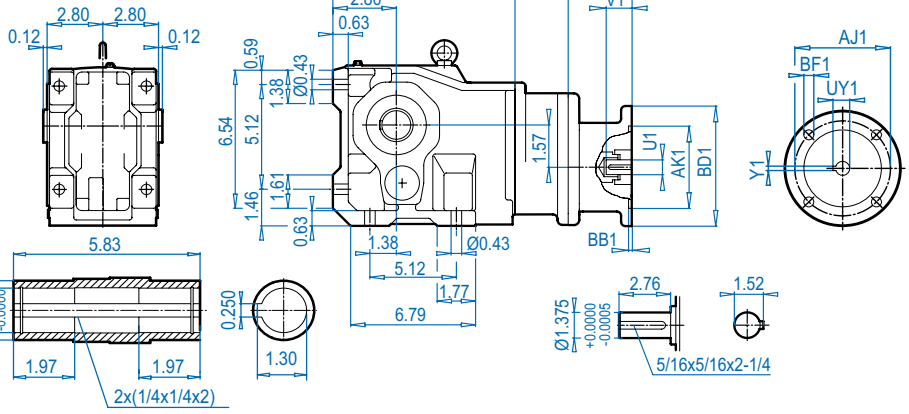


## NEMA Input

## SK 9017.1VF

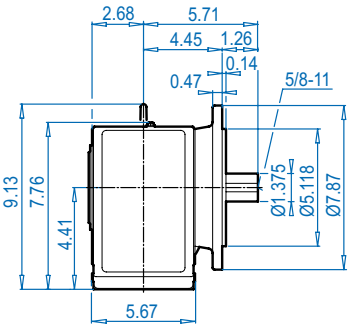


## SK 9017.1AF

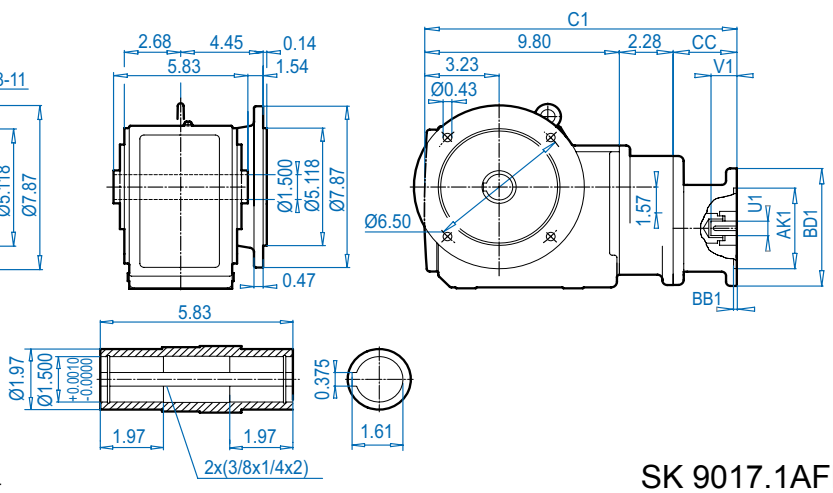


## SK 9017.1AXB ⇨🕮 574

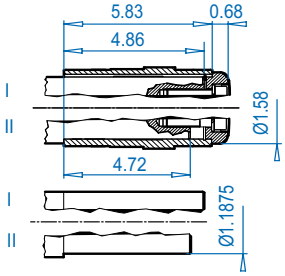


## SK 9017.1AFB ⇨🕮 574

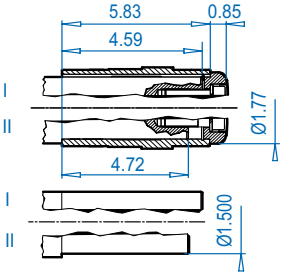


**NEMA Dimensions**

| Type | AJ1 | AK1 | BB1 | BD1 | BF1 | U1 | V1 | UY1 | Y1 | C | C1 | CC |
|---|---|---|---|---|---|---|---|---|---|---|---|---|
| **56C** | 5.88 | 4.500 | 0.18 | 6.54 | 0.43 | 0.625 | 2.06 | 0.71 | 0.188 | 16.15 | 16.58 | 4.50 |


Send Quote Requests to info@automatedpt.com
Call +1(800)985-6929 To Order or Order Online At Nordgearmotors.com

DRIVESYSTEMS

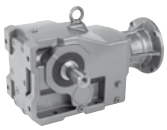



# SK 9017.1 + NEMA

## SK 9017.1AZ

**NEMA Input**

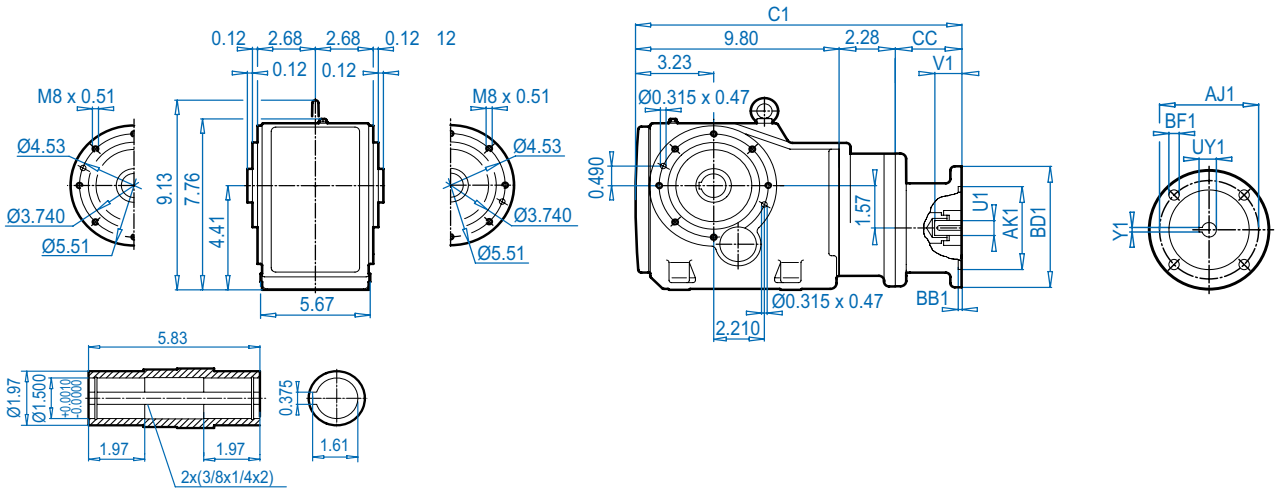


Dimensions in inches
DIMENSIONS

## SK 9017.1AZ**K**

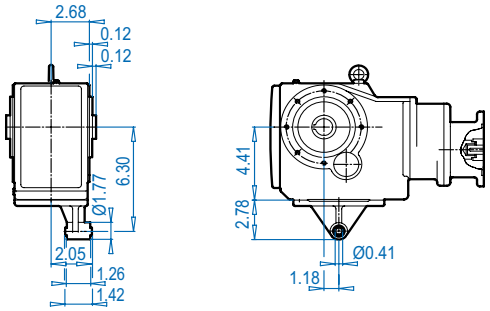


## SK 9017.1AZ**D**

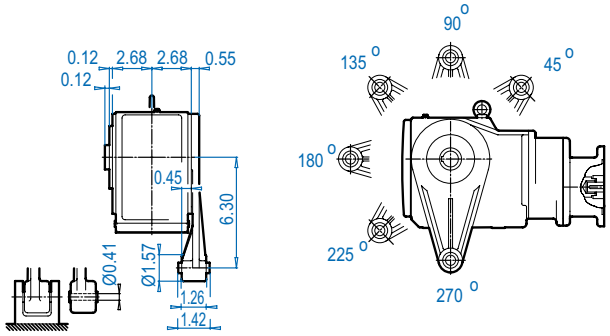


## SK 9017.1AZ**B** ⇨🕮 574

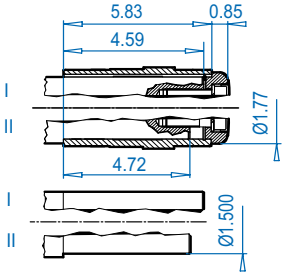


## SK 9017.1AZ**S** ⇨🕮 571

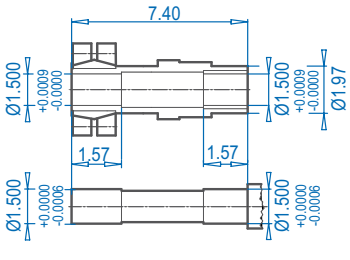


## SK 9017.1AZ**SH**

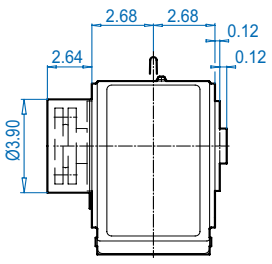


**NEMA Dimensions**

| Type | AJ1 | AK1 | BB1 | BD1 | BF1 | U1 | V1 | UY1 | Y1 | C1 | CC |
|---|---|---|---|---|---|---|---|---|---|---|---|
| **56C** | 5.88 | 4.500 | 0.18 | 6.54 | 0.43 | 0.625 | 2.06 | 0.71 | 0.188 | 16.58 | 4.50 |


Send Quote Requests to info@automatedpt.com
Call +1(800)985-6929 To Order or Order Online At Nordgearmotors.com

# SK 9022.1 + Motor




DRIVESYSTEMS

DIMENSIONS
Dimensions in Inches
ALTERNATE SHAFTS SEE PAGES 566 - 573

## SK 9022.1

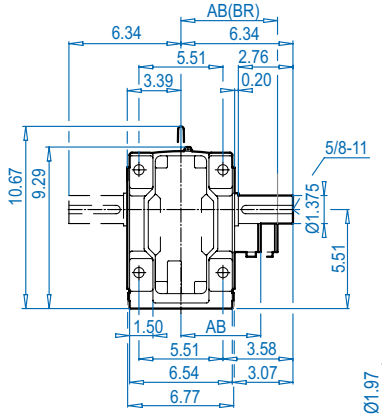


## SK 9022.1AX

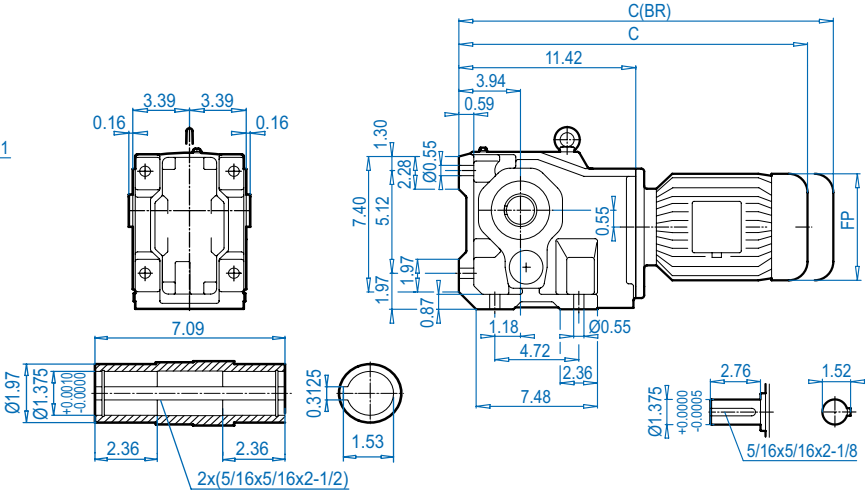


## SK 9022.1VF

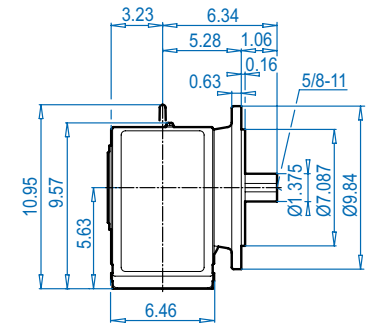


## SK 9022.1AF

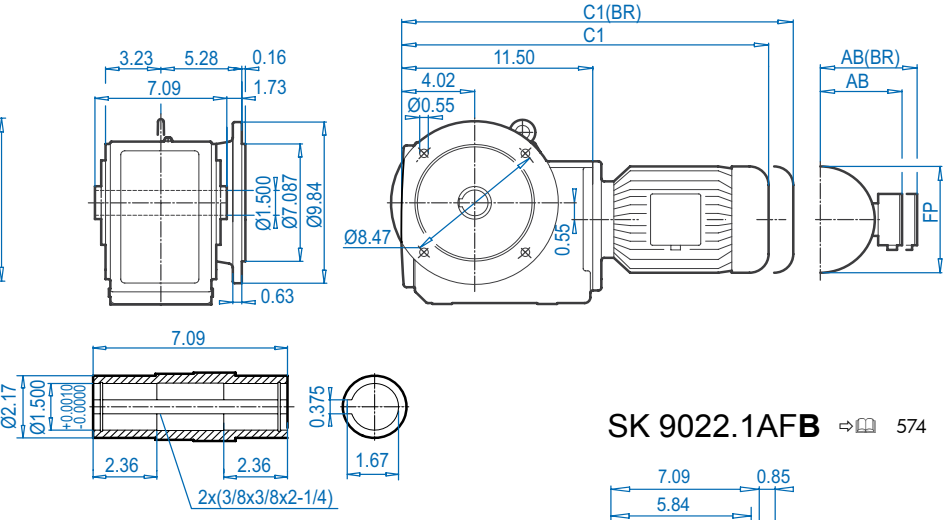


## SK 9022.1AX**B** ⇨🕮 574

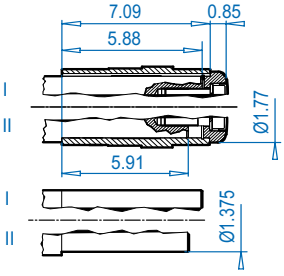


## SK 9022.1AF**B** ⇨🕮 574

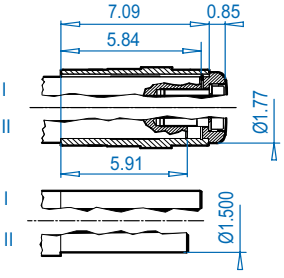


### Motor dimensions

| Standard efficiency | 63S/L | 71S/L | 80S/L | 90S/L | 100L | | For Other Connection Possibilities please see ⇨🕮 555 & 557 |
|---|---|---|---|---|---|---|---|
| Energy efficiency | | | 80LH | 90SH/LH | 100LH | 112MH | |
| AB | 4.53 | 4.88 | 5.59 | 5.79 | 6.65 | 7.05 |  |
| AB (BR) | 4.84 | 5.24 | 5.63 | 5.83 | 6.26 | 6.69 | |
| C1 | 19.21 | 20.79 | 21.77 | 23.39 | 24.57 | 25.47 | |
| C1 (BR) | 21.42 | 23.07 | 24.29 | 26.34 | 28.15 | 29.13 | |
| C | 19.13 | 20.71 | 21.69 | 23.31 | 24.49 | 25.39 | |
| C (BR) | 21.34 | 22.99 | 24.21 | 26.26 | 28.07 | 29.06 | |
| FP | 5.12 | 5.71 | 6.50 | 7.20 | 7.91 | 8.98 | |

**(BR)** denotes Brakemotor


Send Quote Requests to info@automatedpt.com
Call +1(800)985-6929 To Order or Order Online At Nordgearmotors.com

DRIVESYSTEMS



# SK 9022.1 + Motor

## SK 9022.1AZ

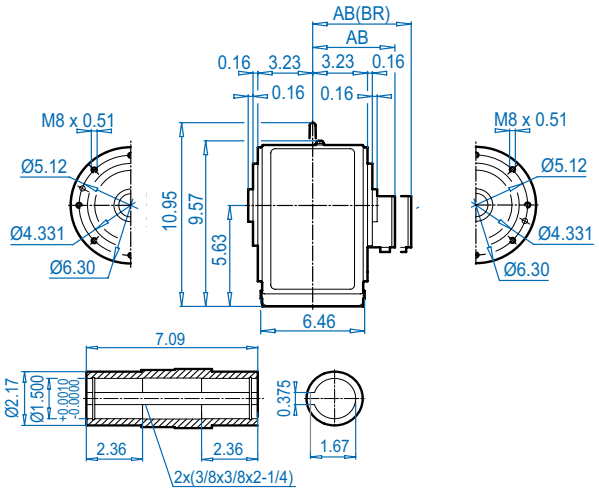


## SK 9022.1AZ**K**

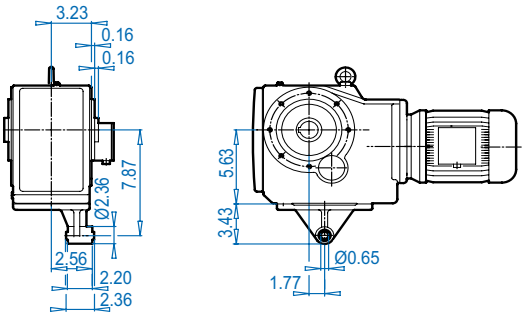


## SK 9022.1AZ**D**

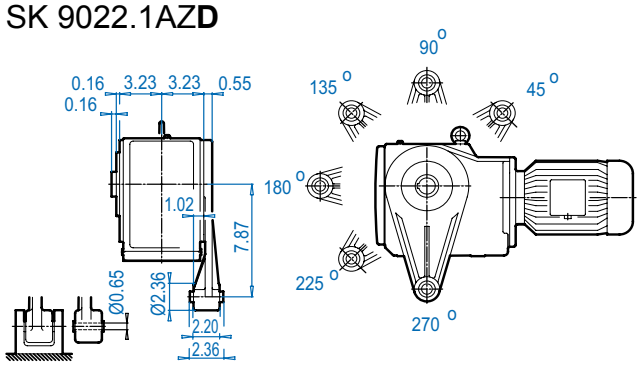


## SK 9022.1AZ**B** ⇨🕮 574

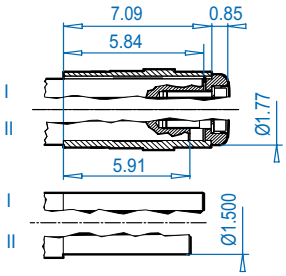


## SK 9022.1AZ**S** ⇨🕮 571

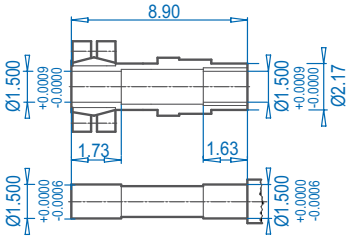


## SK 9022.1AZ**SH**

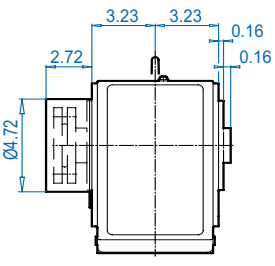


### Motor dimensions

| Standard efficiency | 63S/L | 71S/L | 80S/L | 90S/L | 100L | | For Other Connection Possibilities please see ⇨🕮 555 & 557 |
|---|---|---|---|---|---|---|---|
| Energy efficiency | | | 80LH | 90SH/LH | 100LH | 112MH | |
| **AB** | 4.53 | 4.88 | 5.59 | 5.79 | 6.65 | 7.05 | 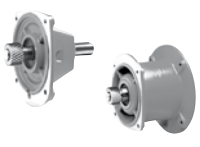 |
| **AB (BR)** | 4.84 | 5.24 | 5.63 | 5.83 | 6.26 | 6.69 | |
| **C1** | 19.21 | 20.79 | 21.77 | 23.39 | 24.57 | 25.47 | |
| **C1 (BR)** | 21.42 | 23.07 | 24.29 | 26.34 | 28.15 | 29.13 | |
| **FP** | 5.12 | 5.71 | 6.50 | 7.20 | 7.91 | 8.98 | |

**(BR)** denotes Brakemotor

Dimensions in Inches DIMENSIONS
ALTERNATE SHAFTS SEE PAGES 566 - 573


Send Quote Requests to info@automatedpt.com
Call +1(800)985-6929 To Order or Order Online At Nordgearmotors.com

# SK 9022.1 + NEMA






## SK 9022.1

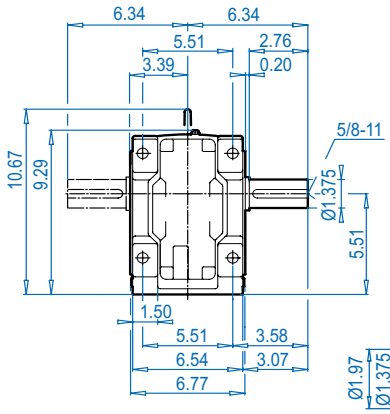


## SK 9022.1AX

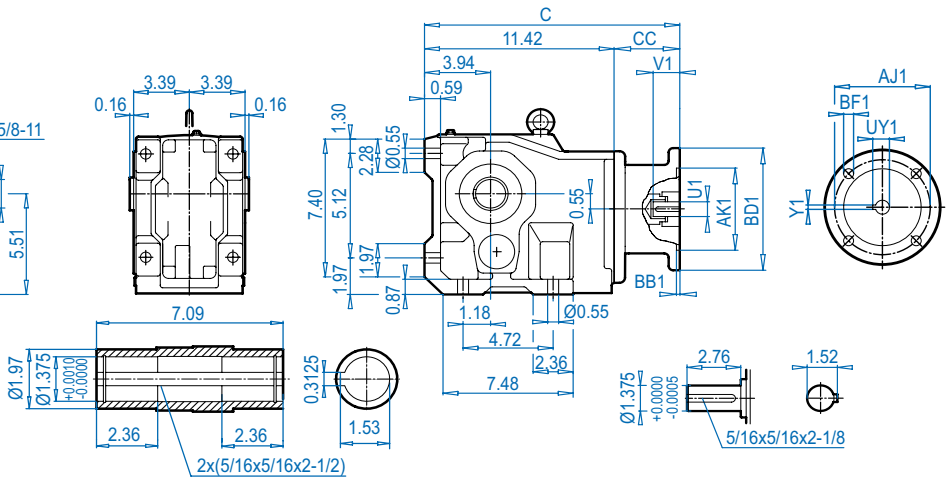


## SK 9022.1VF

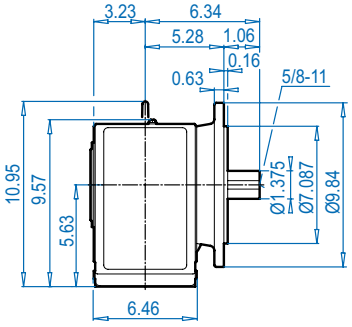


## SK 9022.1AF

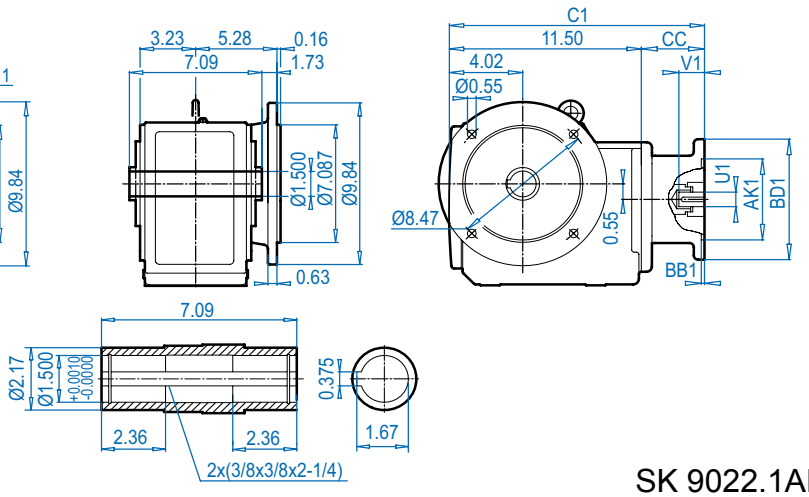


## SK 9022.1AX**B** ⇨🕮 574

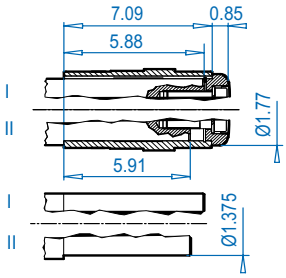


## SK 9022.1AF**B** ⇨🕮 574

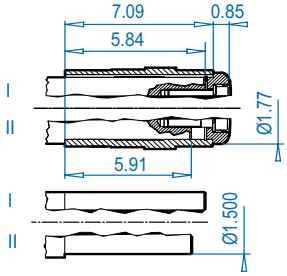


### NEMA Dimensions

| Type | AJ1 | AK1 | BB1 | BD1 | BF1 | U1 | V1 | UY1 | Y1 | C | C1 | CC |
|---|---|---|---|---|---|---|---|---|---|---|---|---|
| **56C** | 5.88 | 4.500 | 0.18 | 6.54 | 0.43 | 0.625 | 2.06 | 0.71 | 0.188 | 15.92 | 16.00 | 4.50 |
| **140TC** | 5.88 | 4.500 | 0.18 | 6.54 | 0.43 | 0.875 | 2.12 | 0.96 | 0.188 | 15.92 | 16.00 | 4.50 |
| **180TC** | 7.25 | 8.500 | 0.23 | 9.17 | 0.59 | 1.125 | 2.62 | 1.24 | 0.250 | 17.02 | 17.15 | 5.65 |


Send Quote Requests to info@automatedpt.com
Call +1(800)985-6929 To Order or Order Online At Nordgearmotors.com

DRIVESYSTEMS

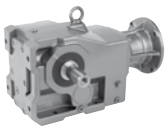



# SK 9022.1 + NEMA

## SK 9022.1AZ

### NEMA Input

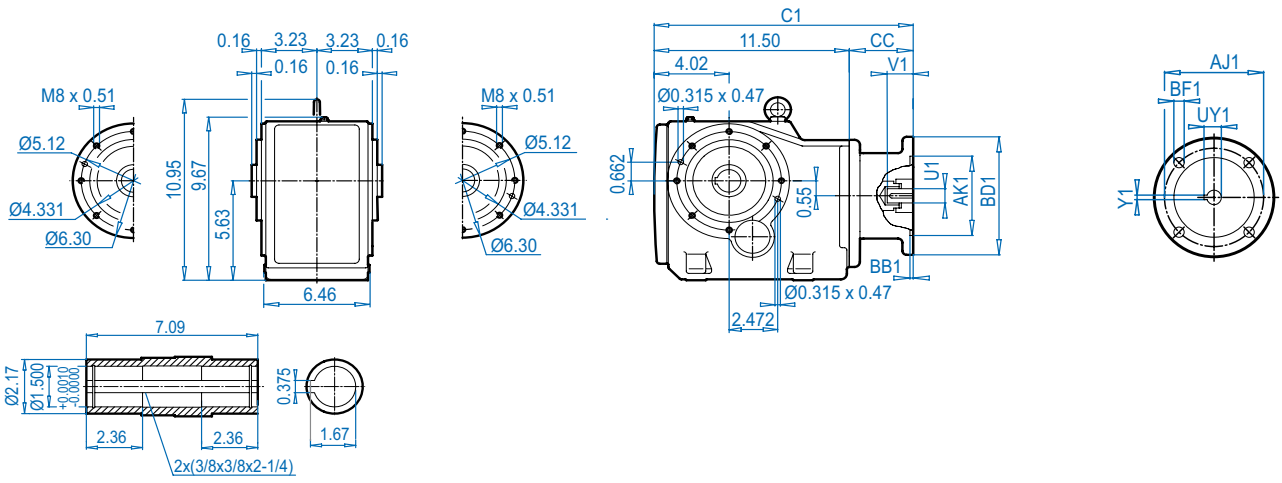


Dimensions in Inches
DIMENSIONS

## SK 9022.1AZ**K**

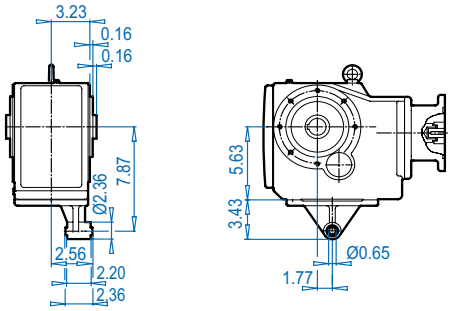


## SK 9022.1AZ**D**

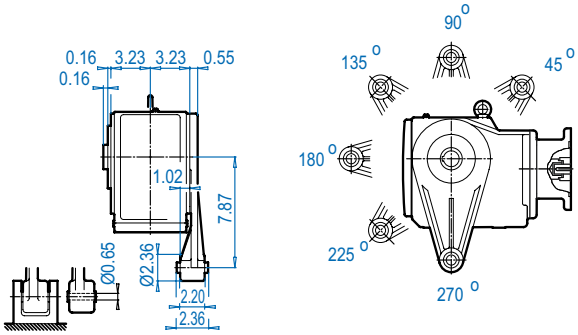


## SK 9022.1AZ**B** ⇨🕮 574

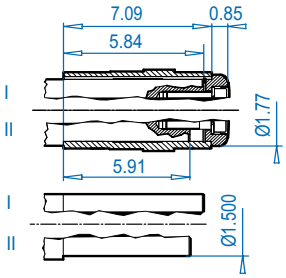


## SK 9022.1AZ**S** ⇨🕮 571

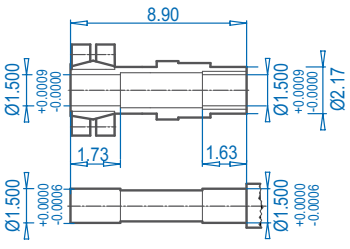


## SK 9022.1AZ**SH**

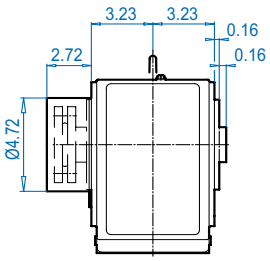


### NEMA Dimensions

| Type | AJ1 | AK1 | BB1 | BD1 | BF1 | U1 | V1 | UY1 | Y1 | C1 | CC |
|---|---|---|---|---|---|---|---|---|---|---|---|
| **56C** | 5.88 | 4.500 | 0.18 | 6.54 | 0.43 | 0.625 | 2.06 | 0.71 | 0.188 | 16.00 | 4.50 |
| **140TC** | 5.88 | 4.500 | 0.18 | 6.54 | 0.43 | 0.875 | 2.12 | 0.96 | 0.188 | 16.00 | 4.50 |
| **180TC** | 7.25 | 8.500 | 0.23 | 9.17 | 0.59 | 1.125 | 2.62 | 1.24 | 0.250 | 17.15 | 5.65 |

ALTERNATE SHAFTS SEE PAGES 566 - 573


Send Quote Requests to info@automatedpt.com
Call +1(800)985-6929 To Order or Order Online At Nordgearmotors.com

# SK 9023.1 + Motor




DRIVESYSTEMS



## SK 9023.1

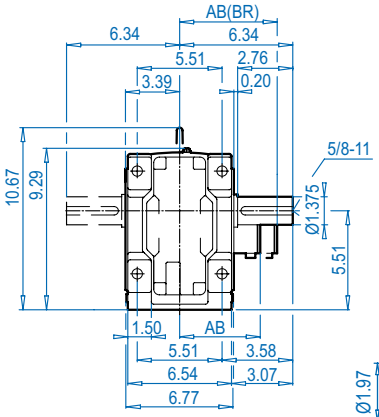


## SK 9023.1AX

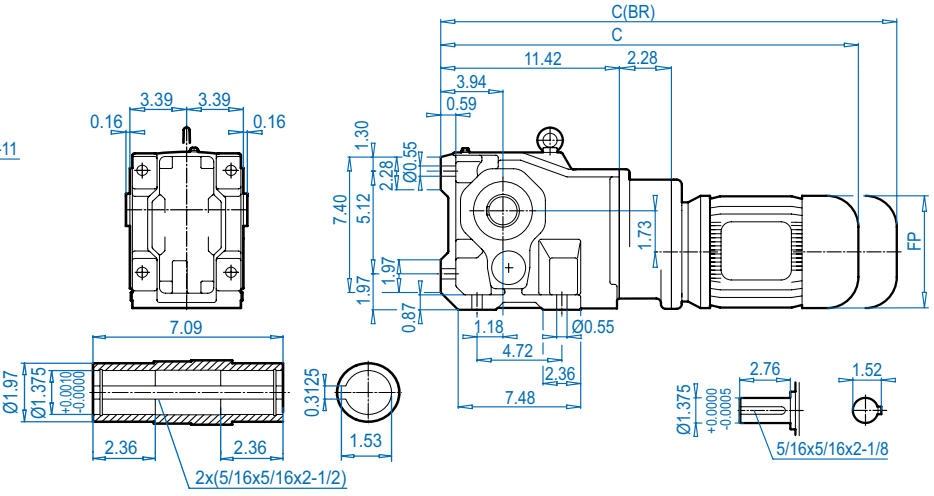


## SK 9023.1VF

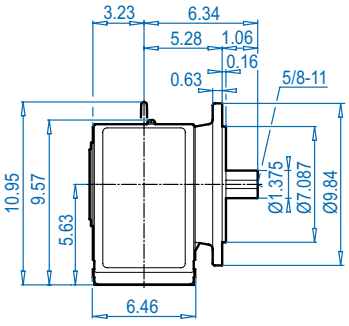


## SK 9023.1AF

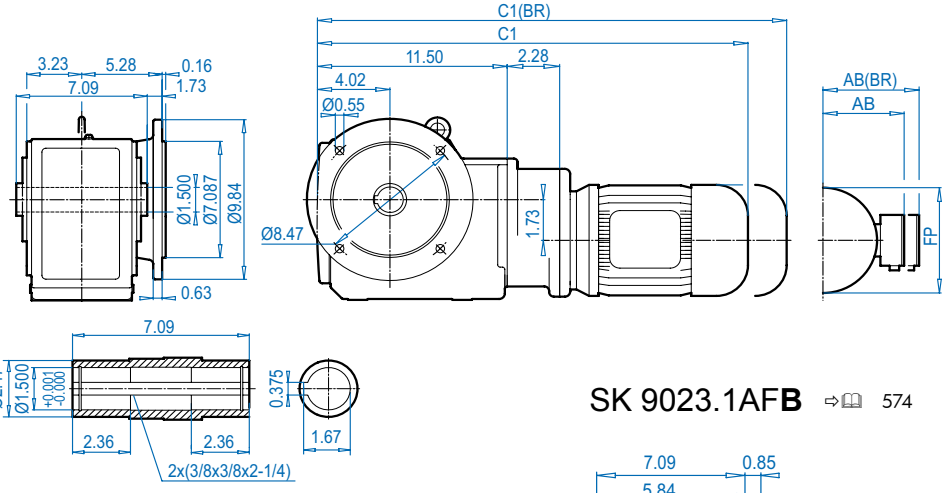


## SK 9023.1AX**B** ⇨🕮 574

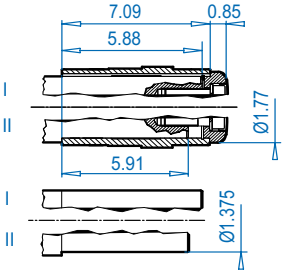


## SK 9023.1AF**B** ⇨🕮 574

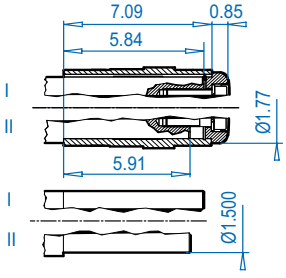


### Motor dimensions

| Standard efficiency | 63S/L | 71S/L | | | For Other Connection Possibilities please see ⇨🕮 555 & 557 |
|---|---|---|---|---|---|
| Energy efficiency | | | | | |
| AB | 4.53 | 4.88 | | | |
| AB (BR) | 4.84 | 5.24 | | | |
| C1 | 21.50 | 23.07 | | | |
| C1 (BR) | 23.70 | 25.35 | | | |
| C | 21.42 | 22.99 | | | |
| C (BR) | 23.62 | 25.28 | | | |
| FP | 5.12 | 5.71 | | | |



**(BR)** denotes Brakemotor


Send Quote Requests to info@automatedpt.com
Call +1(800)985-6929 To Order or Order Online At Nordgearmotors.com

DRIVESYSTEMS



# SK 9023.1 + Motor

## SK 9023.1AZ

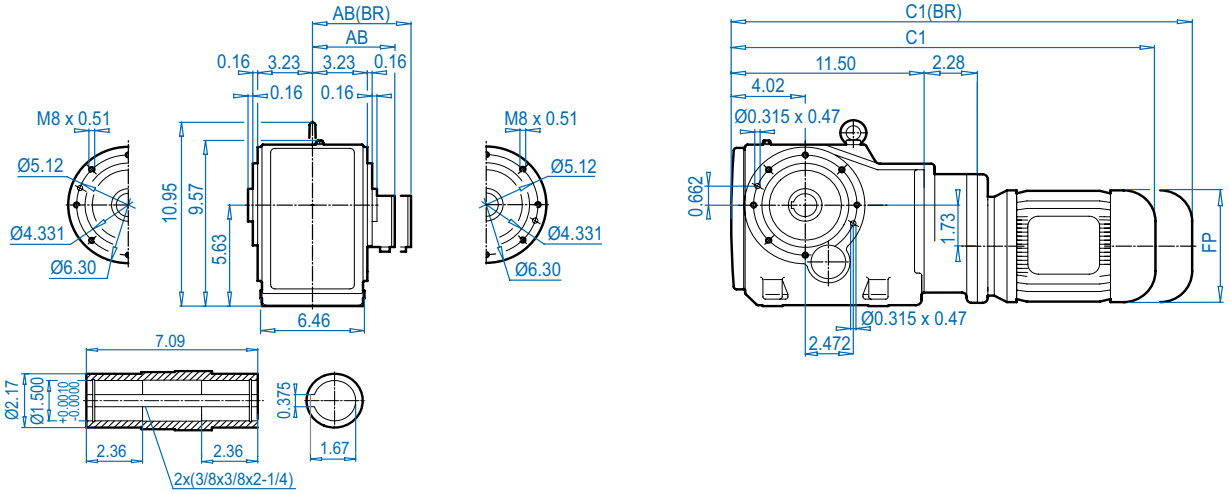


## SK 9023.1AZ**K**

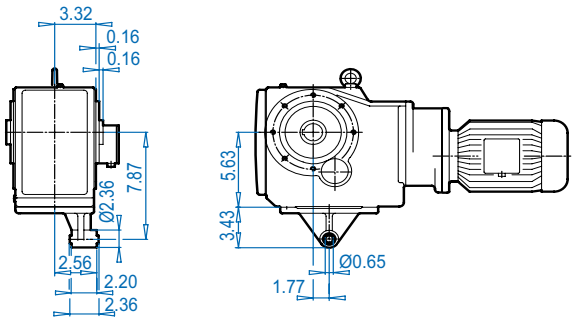


## SK 9023.1AZ**D**

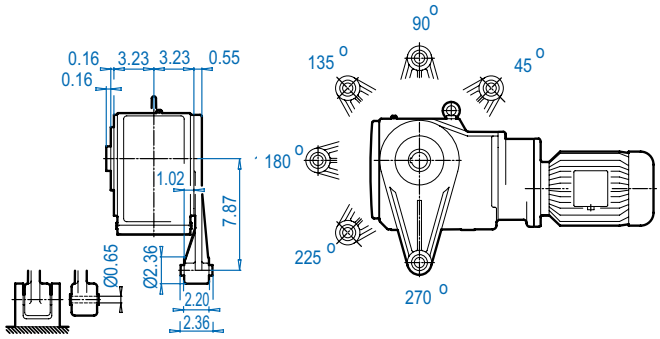


## SK 9023.1AZ**B** ⇨🕮 574

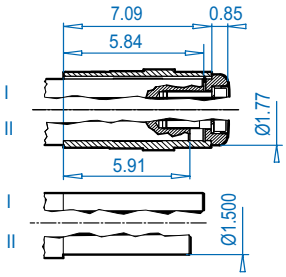


## SK 9023.1AZ**S** ⇨🕮 571

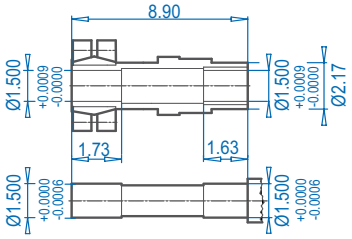


## SK 9023.1AZ**SH**

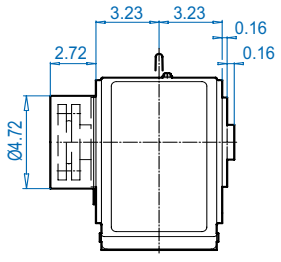


### Motor dimensions

| Standard efficiency | 63S/L | 71S/L | | | For Other Connection Possibilities please see ⇨🕮 555 & 557 |
|---|---|---|---|---|---|
| Energy efficiency | | | | | |
| AB | 4.53 | 4.88 | | | 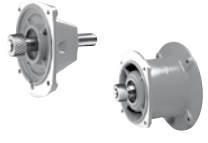 |
| AB (BR) | 4.84 | 5.24 | | | |
| C1 | 21.50 | 23.07 | | | |
| C1 (BR) | 23.70 | 25.35 | | | |
| FP | 5.12 | 5.71 | | | |

**(BR)** denotes Brakemotor

Dimensions in Inches
DIMENSIONS
ALTERNATE SHAFTS SEE PAGES 566 - 573


Send Quote Requests to info@automatedpt.com
Call +1(800)985-6929 To Order or Order Online At Nordgearmotors.com

# SK 9023.1 + NEMA




DRIVESYSTEMS

## SK 9023.1

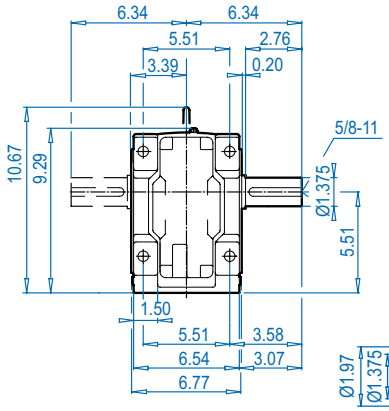


## SK 9023.1AX

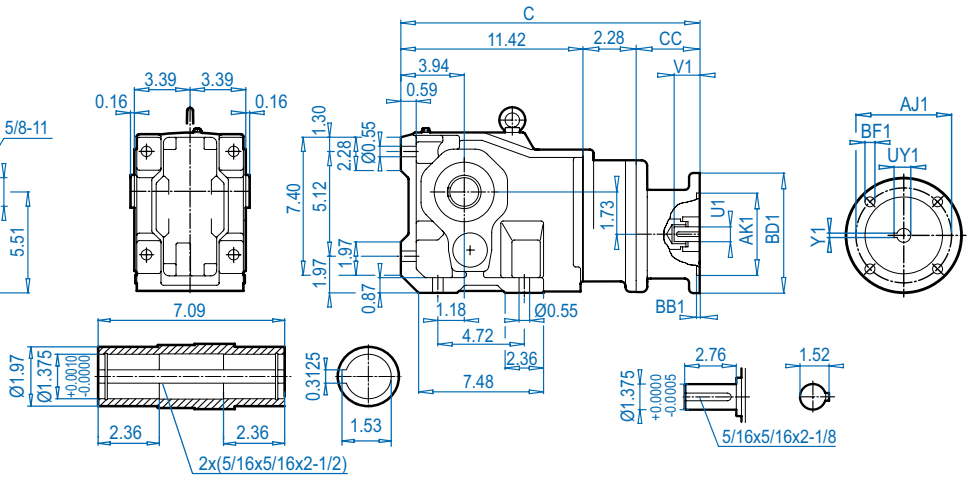


## NEMA Input

DIMENSIONS

Dimensions in Inches

## SK 9023.1VF

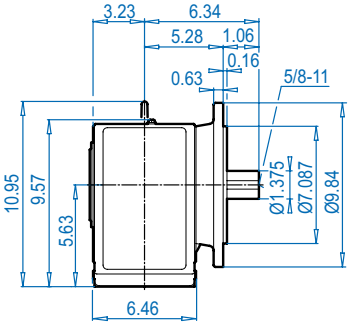


## SK 9023.1AF

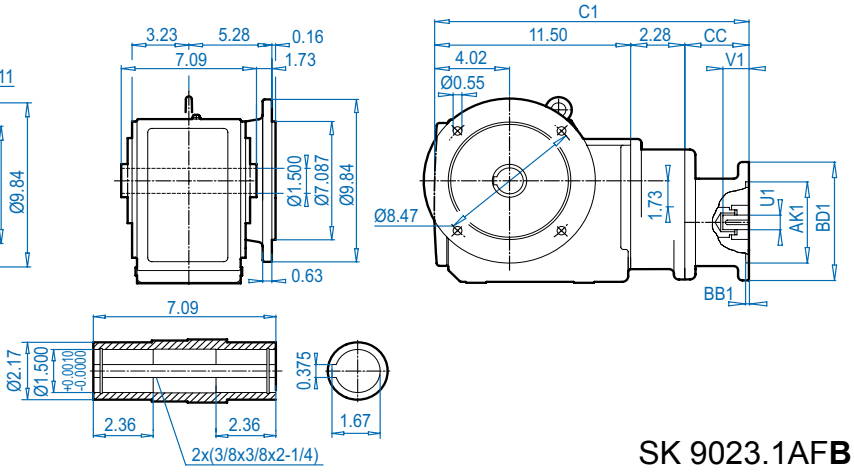


ALTERNATE SHAFTS SEE PAGES 566 - 573

## SK 9023.1AXB ⇨🕮 574

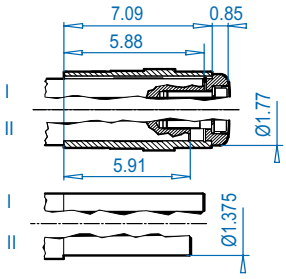


## SK 9023.1AFB ⇨🕮 574

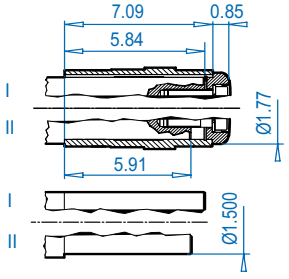


### NEMA Dimensions

| Type | AJ1 | AK1 | BB1 | BD1 | BF1 | U1 | V1 | UY1 | Y1 | C | C1 | CC |
|---|---|---|---|---|---|---|---|---|---|---|---|---|
| **56C** | 5.88 | 4.500 | 0.18 | 6.54 | 0.43 | 0.625 | 2.06 | 0.71 | 0.188 | 18.20 | 18.28 | 4.50 |


Send Quote Requests to info@automatedpt.com
Call +1(800)985-6929 To Order or Order Online At Nordgearmotors.com

DRIVESYSTEMS

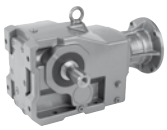



# SK 9023.1 + NEMA

## SK 9023.1AZ

**NEMA Input**

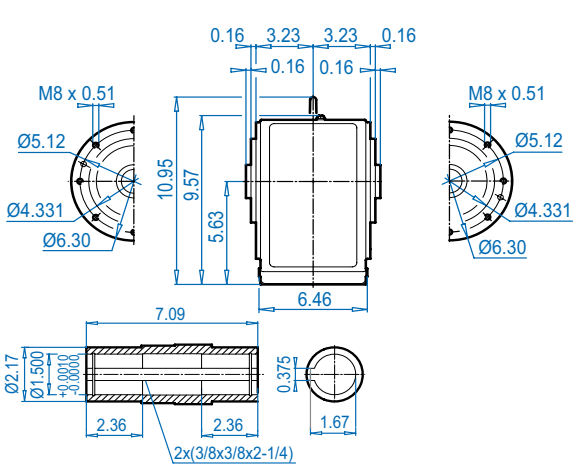


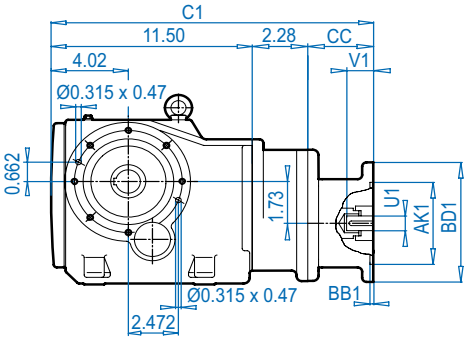


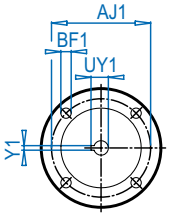


Dimensions in inches
DIMENSIONS

## SK 9023.1AZ**K**

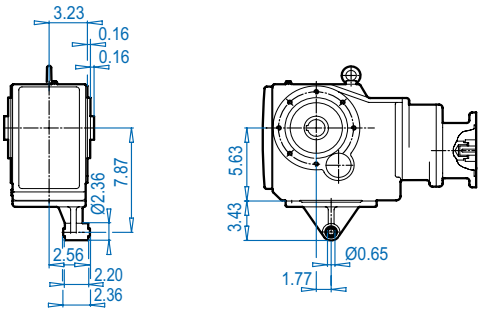


## SK 9023.1AZ**D**

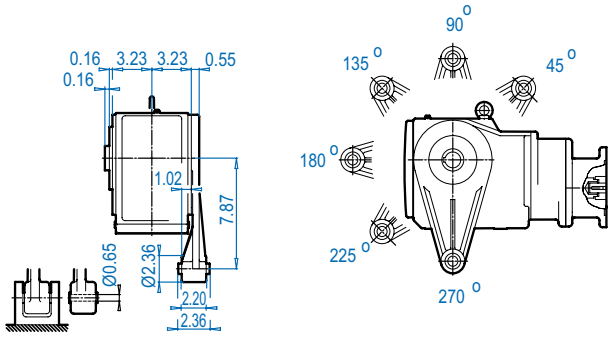


## SK 9023.1AZ**B** ⇨🕮 574

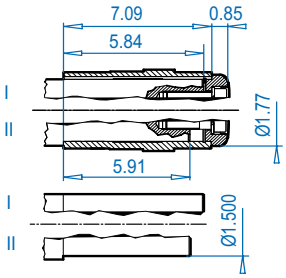


## SK 9023.1AZ**S** ⇨🕮 571

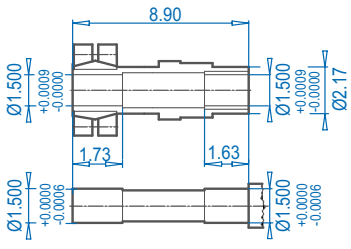


## SK 9023.1AZ**SH**

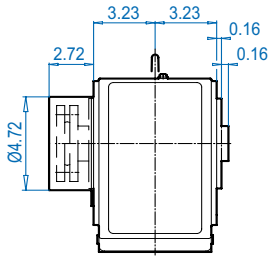


ALTERNATE SHAFTS SEE PAGES 566 - 573

**NEMA Dimensions**

| Type | AJ1 | AK1 | BB1 | BD1 | BF1 | U1 | V1 | UY1 | Y1 | C1 | CC |
|---|---|---|---|---|---|---|---|---|---|---|---|
| **56C** | 5.88 | 4.500 | 0.18 | 6.54 | 0.43 | 0.625 | 2.06 | 0.71 | 0.188 | 18.28 | 4.50 |


Send Quote Requests to info@automatedpt.com
Call +1(800)985-6929 To Order or Order Online At Nordgearmotors.com

# SK 9032.1 + Motor




DRIVESYSTEMS



## SK 9032.1

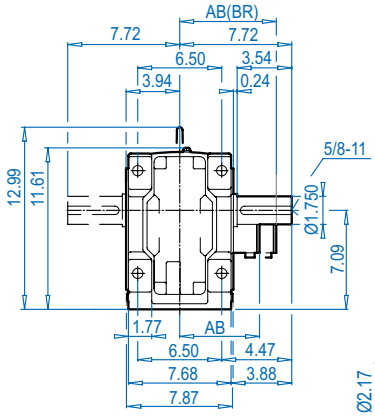


## SK 9032.1AX

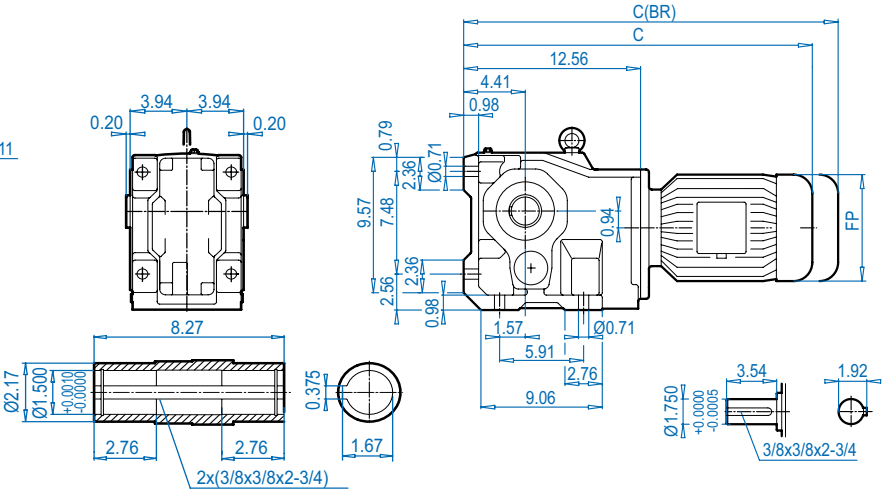


## SK 9032.1VF

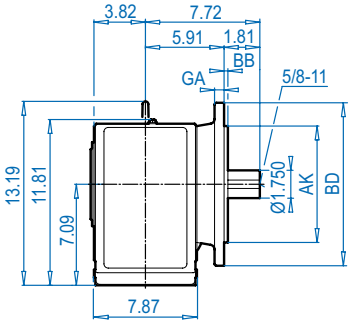


## SK 9032.1AF

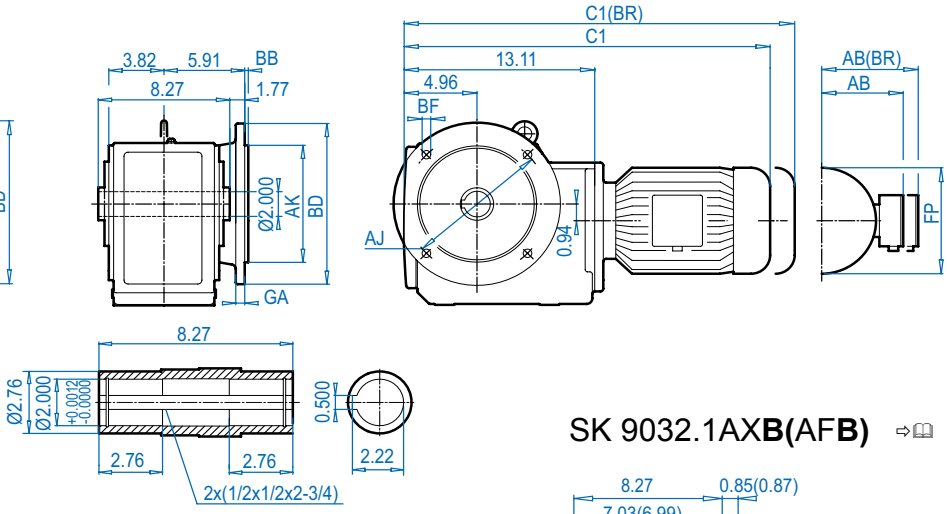


## SK 9032.1AX**B**(AF**B**) ⇨🕮 574

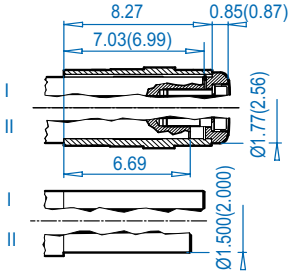


### Mounting flange

| BD (mm) | AJ | AK | BB | BF | GA |
|---|---|---|---|---|---|
| 9.84 (250) | 8.47 | 7.087 + 0.0005 - 0.0004 | 0.16 | 0.55 | 0.63 |
| 11.81 (300) | 10.43 | 9.055 + 0.0006 - 0.0005 | 0.16 | 0.55 | 0.79 |

### Motor dimensions

| Standard efficiency | 71S/L | 80S/L | 90S/L | 100L | | 132S/M | For Other Connection Possibilities please see ⇨🕮 555 & 557 |
|---|---|---|---|---|---|---|---|
| Energy efficiency | | 80LH | 90SH/LH | 100LH | 112MH | 132SH/MH | |
| AB | 4.88 | 5.59 | 5.79 | 6.65 | 7.05 | 8.03 |  |
| AB (BR) | 5.24 | 5.63 | 5.83 | 6.26 | 6.69 | 7.72 | |
| C1 | 22.17 | 23.15 | 24.76 | 25.94 | 26.85 | 30.24 | |
| C1 (BR) | 24.45 | 25.67 | 27.72 | 29.53 | 30.51 | 34.45 | |
| C | 21.61 | 22.60 | 24.21 | 25.39 | 26.30 | 29.69 | |
| C (BR) | 23.90 | 25.12 | 27.17 | 28.98 | 29.96 | 33.90 | |
| FP | 5.71 | 6.50 | 7.20 | 7.91 | 8.98 | 10.47 | |

**(BR)** denotes Brakemotor


Send Quote Requests to info@automatedpt.com
Call +1(800)985-6929 To Order or Order Online At Nordgearmotors.com

DRIVESYSTEMS



# SK 9032.1 + Motor

## SK 9032.1AZ

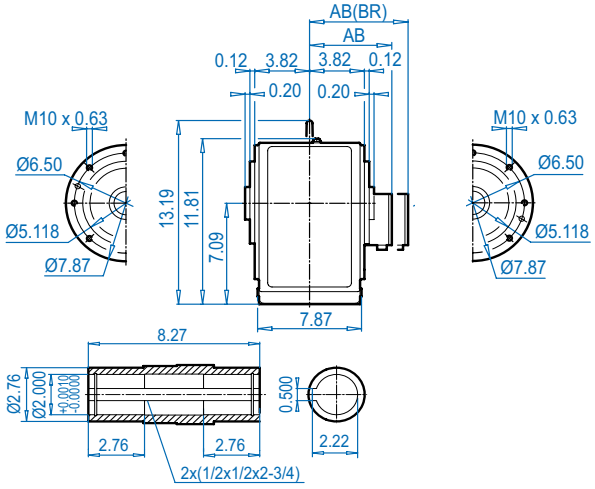


## SK 9032.1AZ**K**

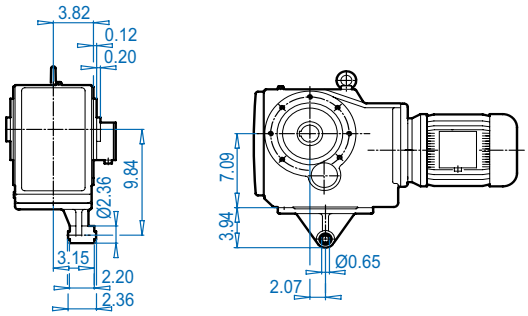


## SK 9032.1AZ**D**

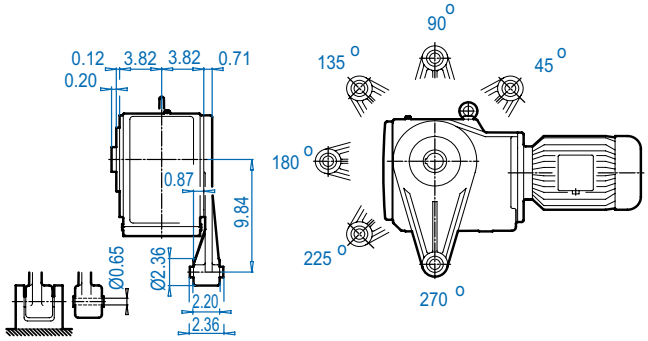


## SK 9032.1AZ**B** ⇨📖 574

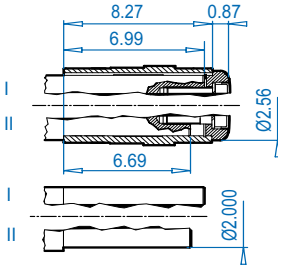


## SK 9032.1AZ**S** ⇨📖 571

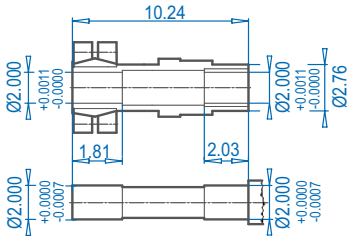


## SK 9032.1AZ**SH**

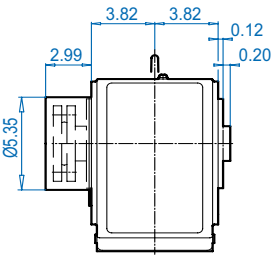


### Motor dimensions

| Standard efficiency | 71S/L | 80S/L | 90S/L | 100L | | 132S/M | For Other Connection Possibilities please see ⇨📖 555 & 557 |
|---|---|---|---|---|---|---|---|
| Energy efficiency | | 80LH | 90SH/LH | 100LH | 112MH | 132SH/MH | |
| AB | 4.88 | 5.59 | 5.79 | 6.65 | 7.05 | 8.03 | 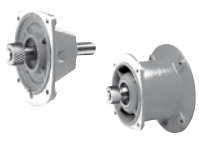 |
| AB (BR) | 5.24 | 5.63 | 5.83 | 6.26 | 6.69 | 7.72 | |
| C1 | 22.17 | 23.15 | 24.76 | 25.94 | 26.85 | 30.24 | |
| C1 (BR) | 24.45 | 25.67 | 27.72 | 29.53 | 30.51 | 34.45 | |
| FP | 5.71 | 6.50 | 7.20 | 7.91 | 8.98 | 10.47 | |

**(BR)** denotes Brakemotor

Dimensions in Inches DIMENSIONS
ALTERNATE SHAFTS SEE PAGES 566 - 573


Send Quote Requests to info@automatedpt.com
Call +1(800)985-6929 To Order or Order Online At Nordgearmotors.com

# SK 9032.1 + NEMA




## SK 9032.1

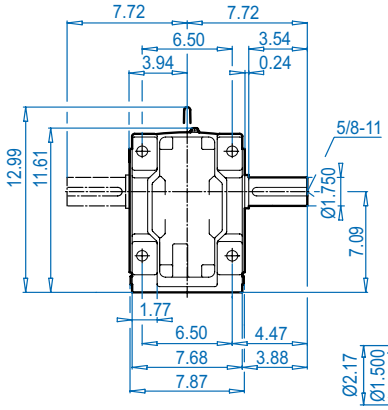


## SK 9032.1AX

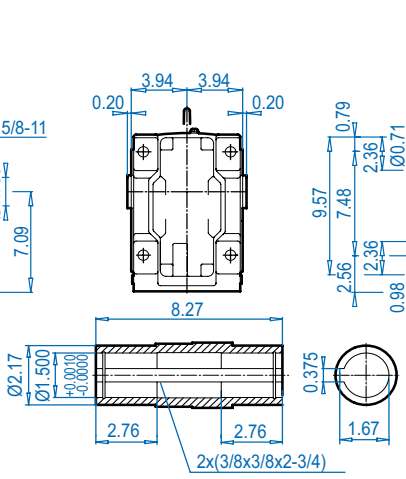


## NEMA Input

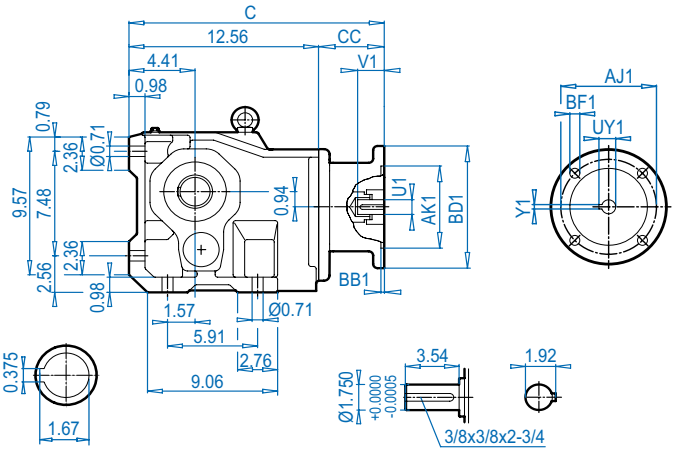


DIMENSIONS
Dimensions in Inches

## SK 9032.1VF

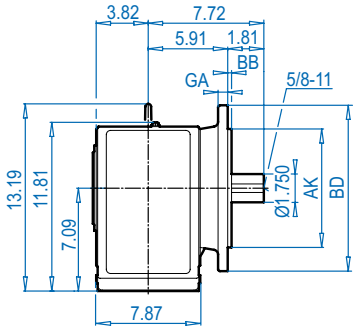


## SK 9032.1AF

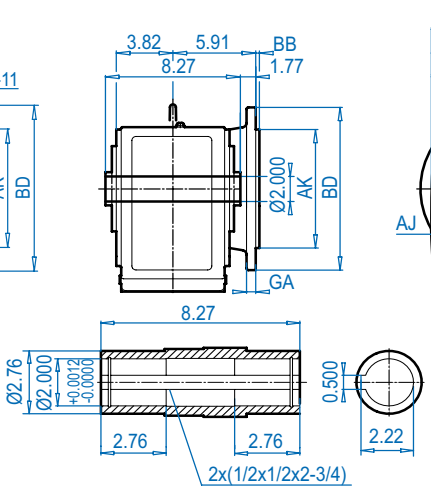


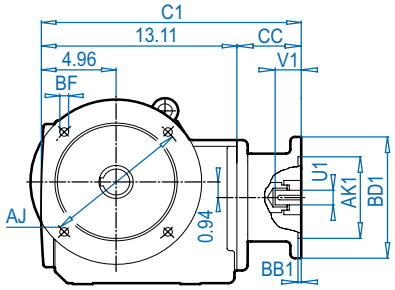


SK 9032.1AX**B(**AF**B)** ⇨🕮 574

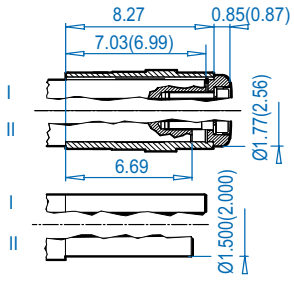


### Mounting flange

| BD (mm) | AJ | AK | BB | BF | GA |
|---|---|---|---|---|---|
| 9.84 (250) | 8.47 | 7.087 + 0.0005 - 0.0004 | 0.16 | 0.55 | 0.63 |
| 11.81 (300) | 10.43 | 9.055 + 0.0006 - 0.0005 | 0.16 | 0.55 | 0.79 |

### NEMA Dimensions

| Type | AJ1 | AK1 | BB1 | BD1 | BF1 | U1 | V1 | UY1 | Y1 | C | C1 | CC |
|---|---|---|---|---|---|---|---|---|---|---|---|---|
| **56C** | 5.88 | 4.500 | 0.18 | 6.54 | 0.43 | 0.625 | 2.06 | 0.71 | 0.188 | 17.16 | 17.71 | 4.60 |
| **140TC** | 5.88 | 4.500 | 0.18 | 6.54 | 0.43 | 0.875 | 2.12 | 0.96 | 0.188 | 17.16 | 17.71 | 4.60 |
| **180TC** | 7.25 | 8.500 | 0.23 | 9.17 | 0.59 | 1.125 | 2.62 | 1.24 | 0.250 | 19.16 | 19.71 | 6.65 |
| **210TC** | 7.25 | 8.500 | 0.23 | 9.17 | 0.59 | 1.375 | 3.12 | 1.52 | 0.312 | 19.16 | 19.71 | 6.65 |

ALTERNATE SHAFTS SEE PAGES 566 - 573


Send Quote Requests to info@automatedpt.com
Call +1(800)985-6929 To Order or Order Online At Nordgearmotors.com

DRIVESYSTEMS

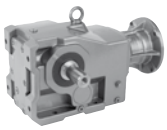



# SK 9032.1 + NEMA

## SK 9032.1AZ

**NEMA Input**

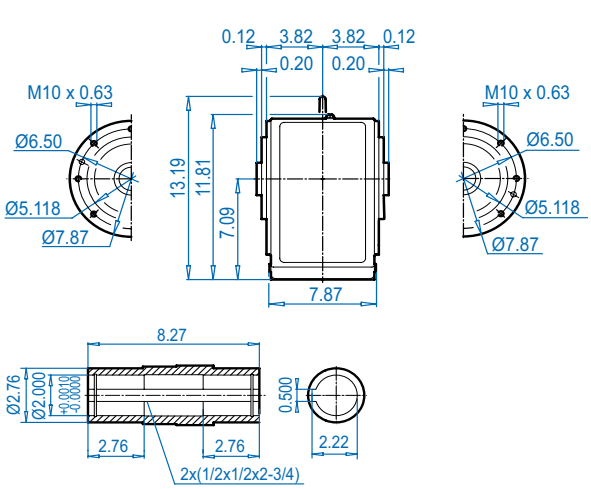


Dimensions in inches
DIMENSIONS

## SK 9032.1AZ**K**

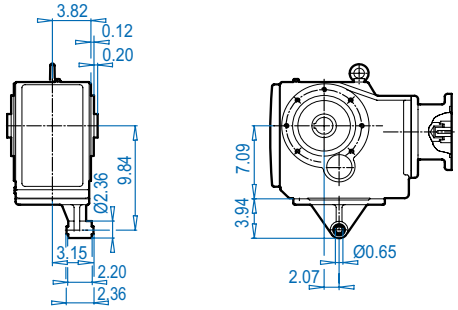


## SK 9032.1AZ**D**

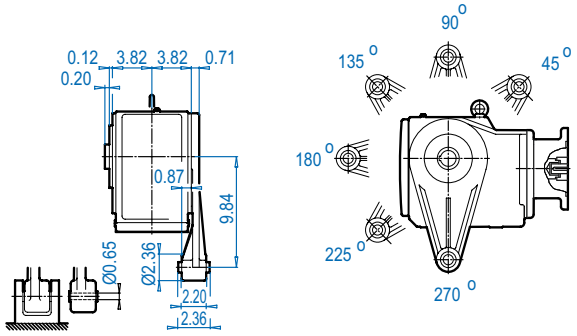


## SK 9032.1AZ**B** ⇨🕮 574

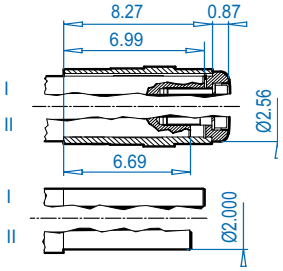


## SK 9032.1AZ**S** ⇨🕮 571

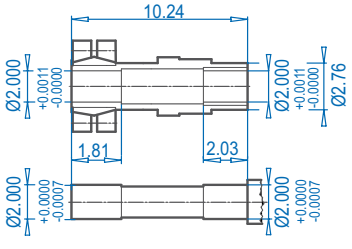


## SK 9032.1AZ**SH**

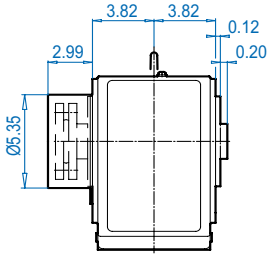


**NEMA Dimensions**

| Type | AJ1 | AK1 | BB1 | BD1 | BF1 | U1 | V1 | UY1 | Y1 | C1 | CC |
|---|---|---|---|---|---|---|---|---|---|---|---|
| **56C** | 5.88 | 4.500 | 0.18 | 6.54 | 0.43 | 0.625 | 2.06 | 0.71 | 0.188 | 17.71 | 4.60 |
| **140TC** | 5.88 | 4.500 | 0.18 | 6.54 | 0.43 | 0.875 | 2.12 | 0.96 | 0.188 | 17.71 | 4.60 |
| **180TC** | 7.25 | 8.500 | 0.23 | 9.17 | 0.59 | 1.125 | 2.62 | 1.24 | 0.250 | 19.71 | 6.65 |
| **210TC** | 7.25 | 8.500 | 0.23 | 9.17 | 0.59 | 1.375 | 3.12 | 1.52 | 0.312 | 19.71 | 6.65 |

ALTERNATE SHAFTS SEE PAGES 566 - 573


Send Quote Requests to info@automatedpt.com
Call +1(800)985-6929 To Order or Order Online At Nordgearmotors.com

# SK 9033.1 + Motor




DRIVESYSTEMS

## SK 9033.1

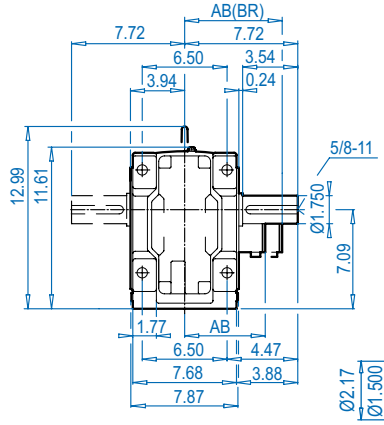


## SK 9033.1AX

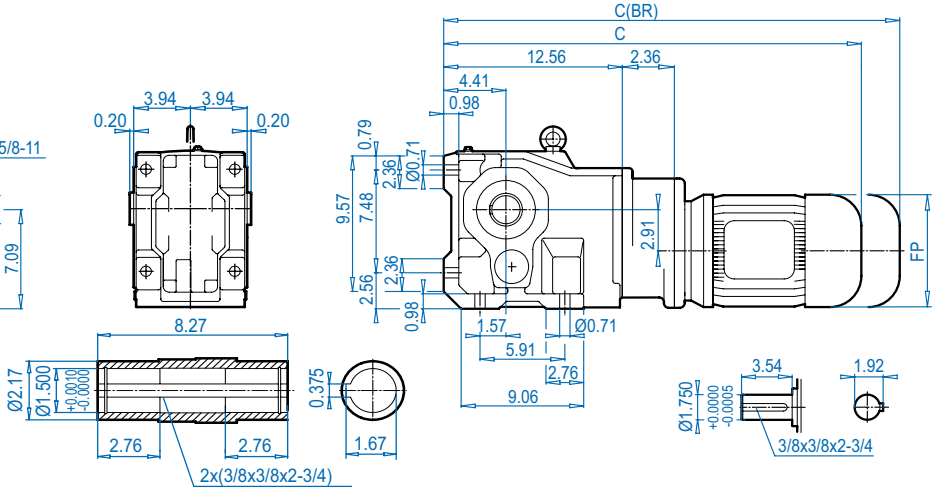


## SK 9033.1VF

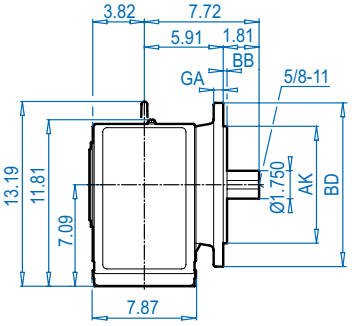


## SK 9033.1AF

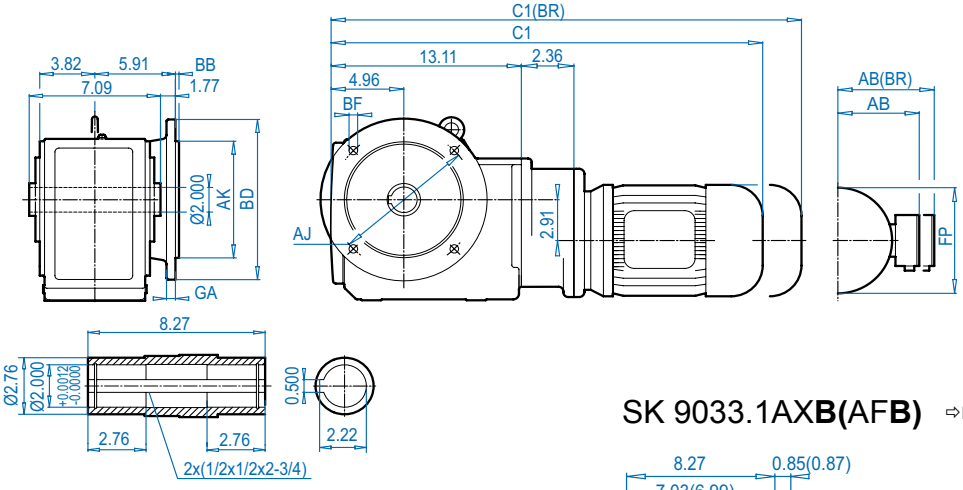


## SK 9033.1AX**B**(AF**B**) ⇨🕮 574

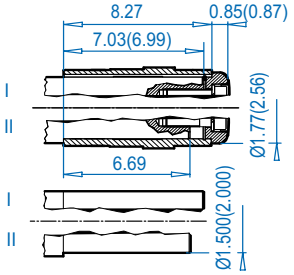


### Mounting flange

| BD (mm) | AJ | AK | BB | BF | GA |
|---|---|---|---|---|---|
| 9.84 (250) | 8.47 | 7.087 + 0.0005 - 0.0004 | 0.16 | 0.55 | 0.63 |
| 11.81 (300) | 10.43 | 9.055 + 0.0006 - 0.0005 | 0.16 | 0.55 | 0.79 |

### Motor dimensions

| Standard efficiency | 63S/L | 71S/L | 80S/L | | | | For Other Connection Possibilities please see ⇨🕮 555 & 557 |
|---|---|---|---|---|---|---|---|
| Energy efficiency | | | 80LH | | | | |
| **AB** | 4.53 | 4.88 | 5.59 | | | |  |
| **AB (BR)** | 4.84 | 5.24 | 5.63 | | | | |
| **C1** | 23.19 | 24.76 | 25.75 | | | | |
| **C1 (BR)** | 25.39 | 27.05 | 28.27 | | | | |
| **C** | 22.64 | 24.21 | 25.20 | | | | |
| **C (BR)** | 24.84 | 26.50 | 27.72 | | | | |
| **FP** | 5.12 | 5.71 | 6.50 | | | | |

**(BR)** denotes Brakemotor




Send Quote Requests to info@automatedpt.com
Call +1(800)985-6929 To Order or Order Online At Nordgearmotors.com

DRIVESYSTEMS

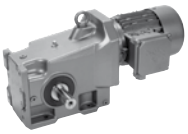



# SK 9033.1 + Motor

## SK 9033.1AZ

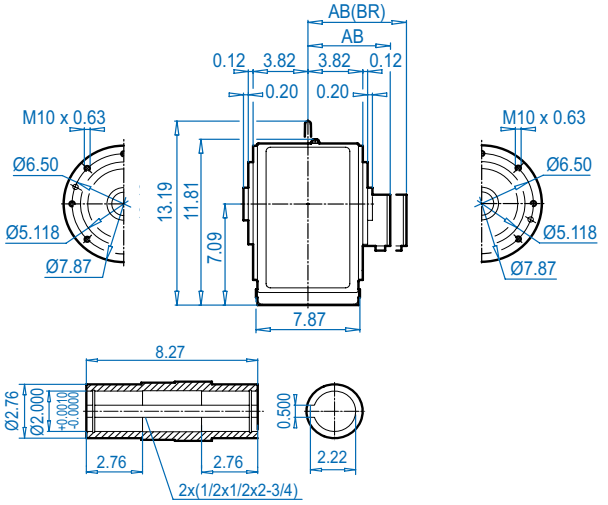


## SK 9033.1AZ**K**

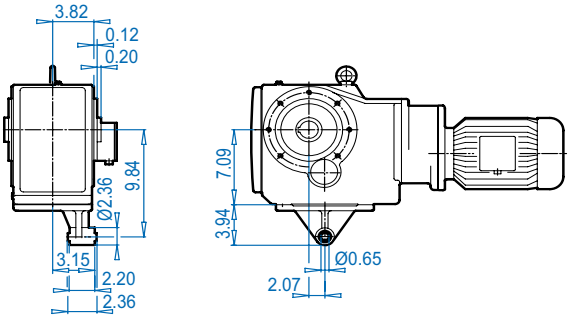


## SK 9033.1AZ**D**

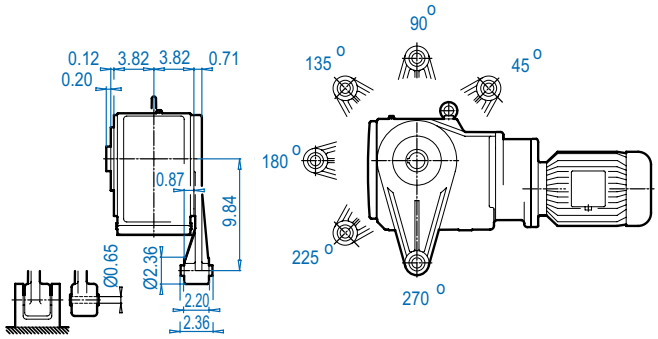


## SK 9033.1AZ**B** ⇨📖 574

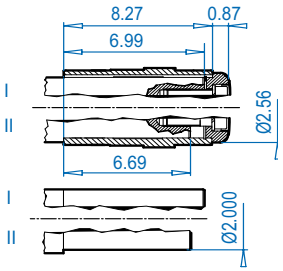


## SK 9033.1AZ**S** ⇨📖 571

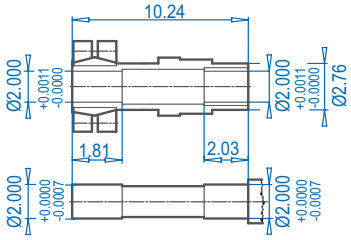


## SK 9033.1AZ**SH**

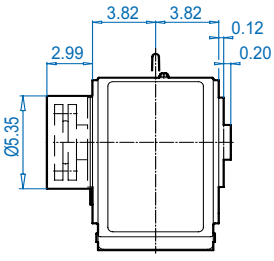


### Motor dimensions

| Standard efficiency | 63S/L | 71S/L | 80S/L | | | | For Other Connection Possibilities please see ⇨📖 555 & 557 |
|---|---|---|---|---|---|---|---|
| Energy efficiency | | | 80LH | | | | |
| AB | 4.53 | 4.88 | 5.59 | | | | 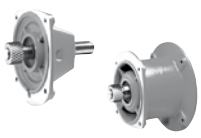 |
| AB (BR) | 4.84 | 5.24 | 5.63 | | | | |
| C1 | 23.19 | 24.76 | 25.75 | | | | |
| C1 (BR) | 25.39 | 27.05 | 28.27 | | | | |
| FP | 5.12 | 5.71 | 6.50 | | | | |

**(BR)** denotes Brakemotor

Dimensions in Inches DIMENSIONS
ALTERNATE SHAFTS SEE PAGES 566 - 573


Send Quote Requests to info@automatedpt.com
Call +1(800)985-6929 To Order or Order Online At Nordgearmotors.com

# SK 9033.1 + NEMA




## SK 9033.1

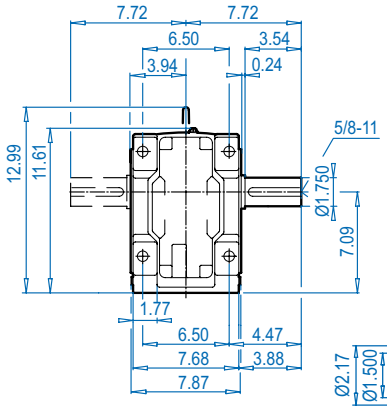


## SK 9033.1AX

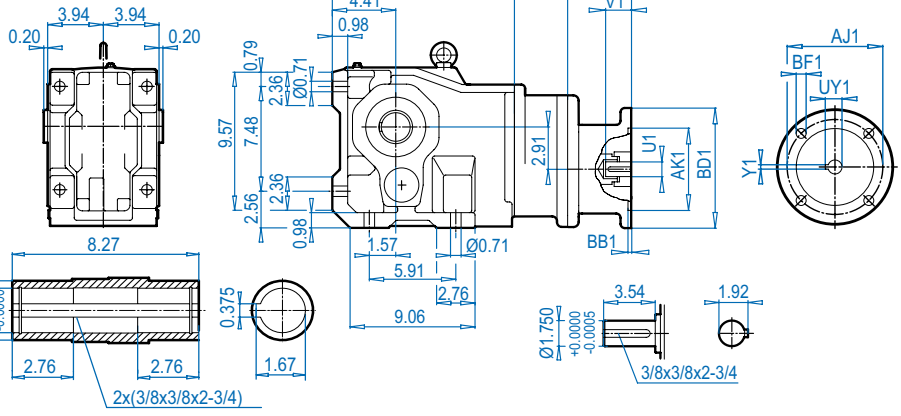


## NEMA Input

## SK 9033.1VF

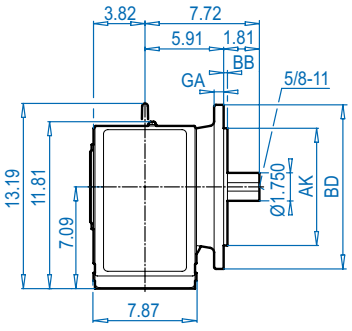


## SK 9033.1AF

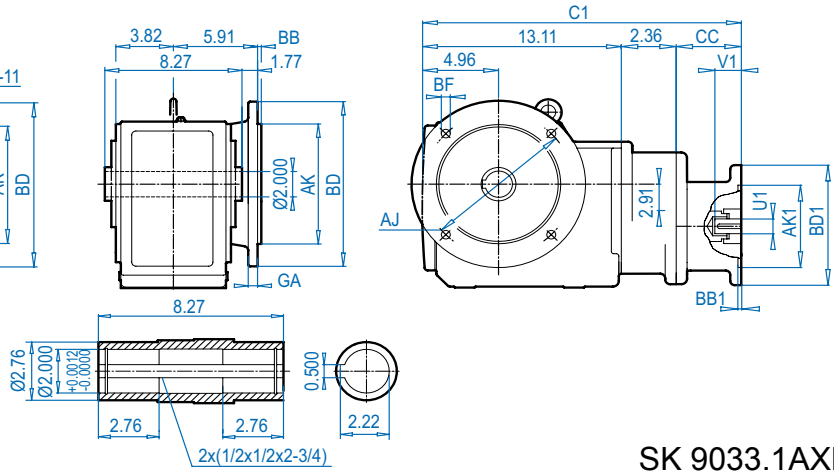


SK 9033.1AX**B**(AF**B**) ⇨🕮 574

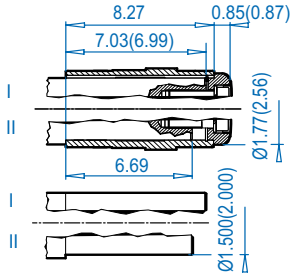


### Mounting flange

| BD (mm) | AJ | AK | BB | BF | GA |
|---|---|---|---|---|---|
| 9.84 (250) | 8.47 | 7.087 + 0.0005 - 0.0004 | 0.16 | 0.55 | 0.63 |
| 11.81 (300) | 10.43 | 9.055 + 0.0006 - 0.0005 | 0.16 | 0.55 | 0.79 |

### NEMA Dimensions

| Type | AJ1 | AK1 | BB1 | BD1 | BF1 | U1 | V1 | UY1 | Y1 | C | C1 | CC |
|---|---|---|---|---|---|---|---|---|---|---|---|---|
| **56C** | 5.88 | 4.500 | 0.18 | 6.54 | 0.43 | 0.625 | 2.06 | 0.71 | 0.188 | 19.42 | 19.97 | 4.50 |
| **140TC** | 5.88 | 4.500 | 0.18 | 6.54 | 0.43 | 0.875 | 2.12 | 0.96 | 0.188 | 19.42 | 19.97 | 4.50 |

DIMENSIONS Dimensions in Inches
ALTERNATE SHAFTS SEE PAGES 566 - 573


Send Quote Requests to info@automatedpt.com
Call +1(800)985-6929 To Order or Order Online At Nordgearmotors.com

DRIVESYSTEMS

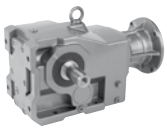



# SK 9033.1 + NEMA

## SK 9033.1AZ

**NEMA Input**

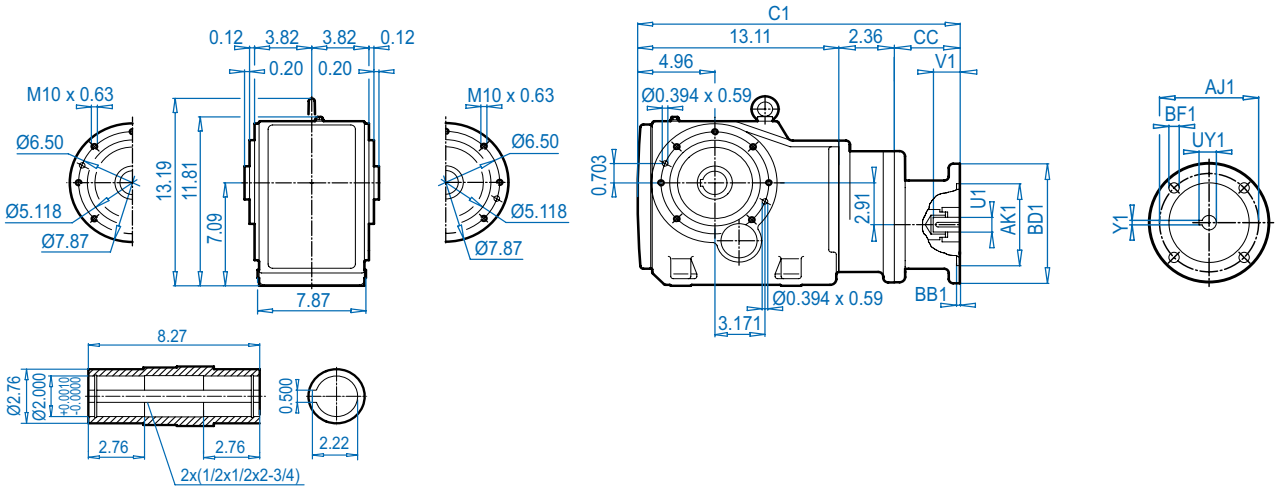


Dimensions in Inches
DIMENSIONS

## SK 9033.1AZ**K**

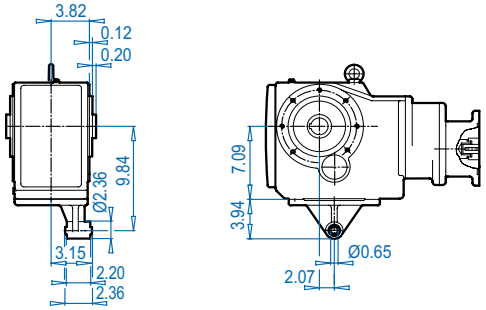


## SK 9033.1AZ**D**

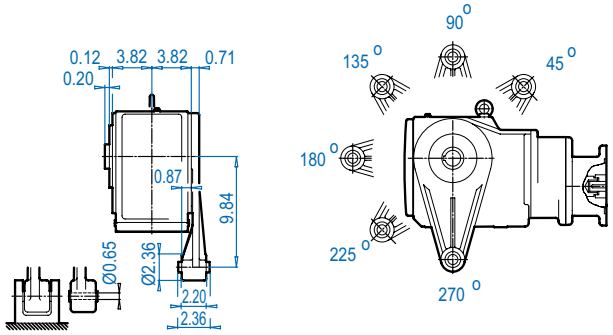


## SK 9033.1AZ**B** ⇨🕮 574

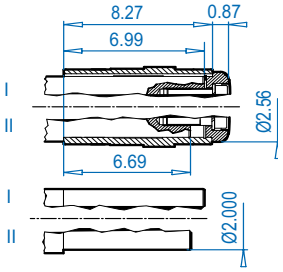


## SK 9033.1AZ**S** ⇨🕮 571

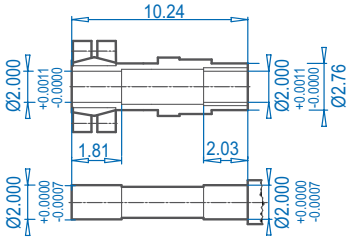


## SK 9033.1AZ**SH**

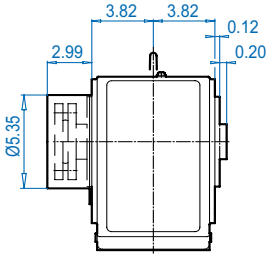


**NEMA Dimensions**

| Type | AJ1 | AK1 | BB1 | BD1 | BF1 | U1 | V1 | UY1 | Y1 | C1 | CC |
|---|---|---|---|---|---|---|---|---|---|---|---|
| **56C** | 5.88 | 4.500 | 0.18 | 6.54 | 0.43 | 0.625 | 2.06 | 0.71 | 0.188 | 19.97 | 4.50 |
| **140TC** | 5.88 | 4.500 | 0.18 | 6.54 | 0.43 | 0.875 | 2.12 | 0.96 | 0.188 | 19.97 | 4.50 |

ALTERNATE SHAFTS SEE PAGES 566 - 573


Send Quote Requests to info@automatedpt.com
Call +1(800)985-6929 To Order or Order Online At Nordgearmotors.com

# SK 9042.1 + Motor




DRIVESYSTEMS

## SK 9042.1

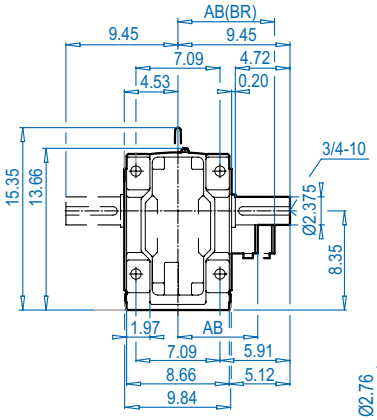


## SK 9042.1AX

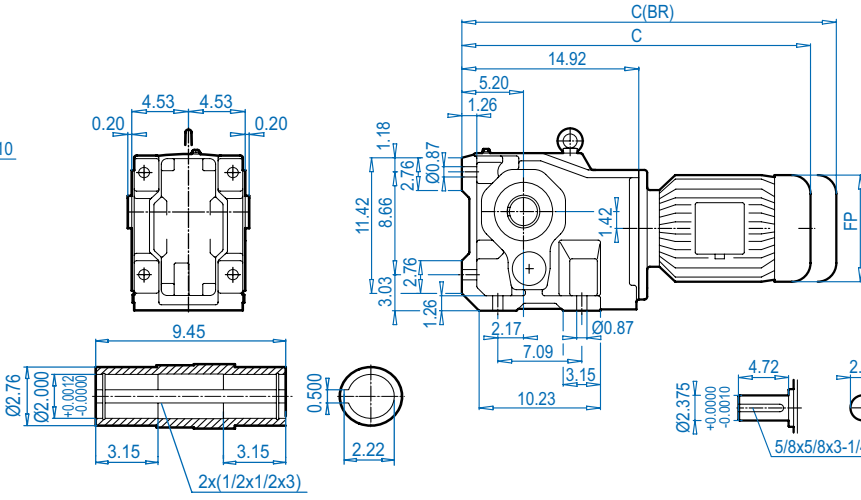


## SK 9042.1VF

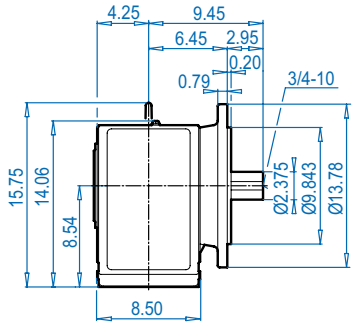


## SK 9042.1AF

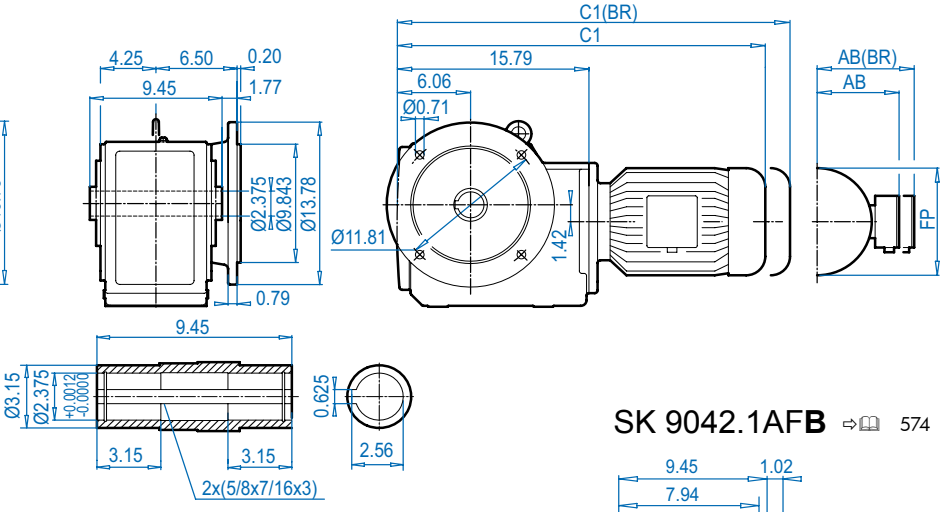


## SK 9042.1AXB ⇨🕮 574

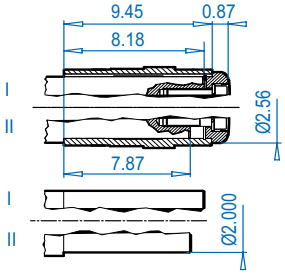


## SK 9042.1AFB ⇨🕮 574

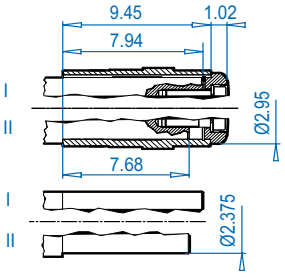


### Motor dimensions

| Standard efficiency | 90S/L | 100L | | 132S/M | 160M/L | | For Other Connection Possibilities please see ⇨🕮 555 & 557 |
|---|---|---|---|---|---|---|---|
| Energy efficiency | 90SH/LH | 100LH | 112MH | 132SH/MH | 160MH | 160LH | |
| AB | 5.79 | 6.65 | 7.05 | 8.03 | 8.90 | 8.90 |  |
| AB (BR) | 5.83 | 6.26 | 6.69 | 7.72 | 8.90 | 8.90 | |
| C1 | 26.65 | 27.83 | 28.74 | 32.13 | 34.61 | 34.61 | |
| C1 (BR) | 29.61 | 31.42 | 32.40 | 36.34 | 41.19 | 41.19 | |
| C | 25.79 | 26.97 | 27.87 | 31.26 | 33.74 | 33.74 | |
| C (BR) | 28.74 | 30.55 | 31.54 | 35.47 | 40.32 | 40.32 | |
| FP | 7.20 | 7.91 | 8.98 | 10.47 | 12.60 | 12.60 | |

**(BR)** denotes Brakemotor




Send Quote Requests to info@automatedpt.com
Call +1(800)985-6929 To Order or Order Online At Nordgearmotors.com




# SK 9042.1 + Motor

## SK 9042.1AZ

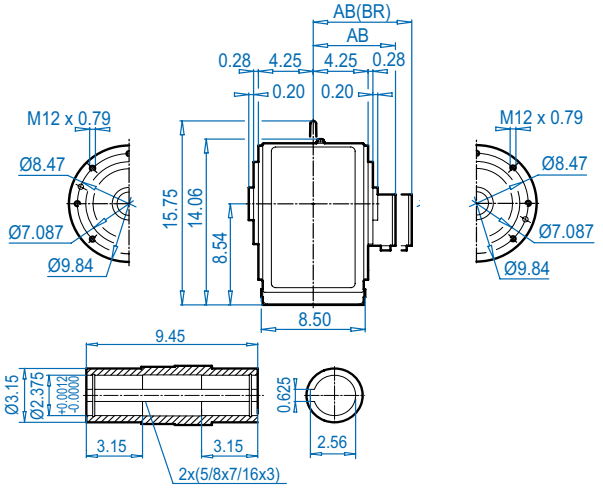


## SK 9042.1AZ**K**

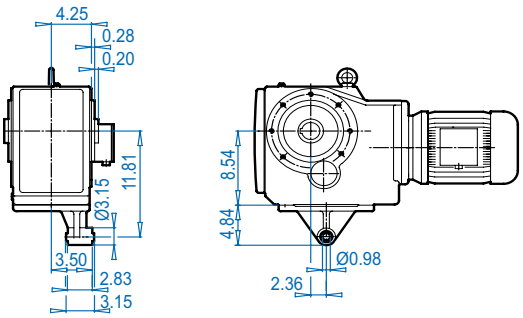


## SK 9042.1AZ**D**

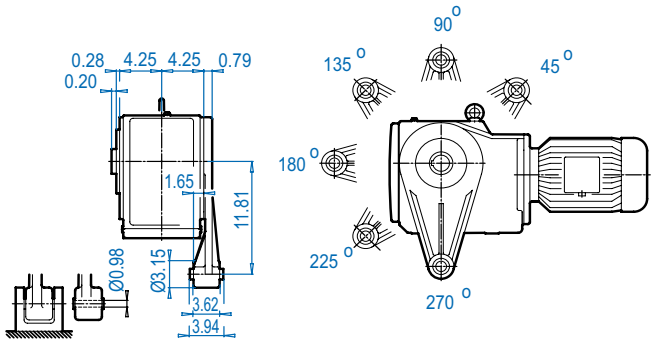


## SK 9042.1AZ**B** ⇨🕮 574

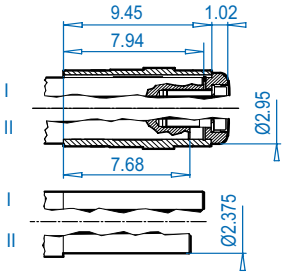


## SK 9042.1AZ**S** ⇨🕮 571

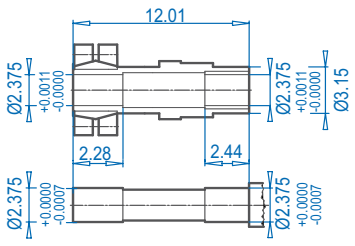


## SK 9042.1AZ**SH**

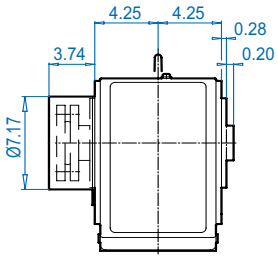


### Motor dimensions

| Standard efficiency | 90S/L | 100L | | 132S/M | 160M/L | | For Other Connection Possibilities please see ⇨🕮 555 & 557 |
|---|---|---|---|---|---|---|---|
| Energy efficiency | 90SH/LH | 100LH | 112MH | 132SH/MH | 160MH | 160LH | |
| **AB** | 5.79 | 6.65 | 7.05 | 8.03 | 8.90 | 8.90 | 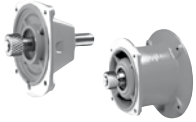 |
| **AB (BR)** | 5.83 | 6.26 | 6.69 | 7.72 | 8.90 | 8.90 | |
| **C1** | 26.65 | 27.83 | 28.74 | 32.13 | 34.61 | 34.61 | |
| **C1 (BR)** | 29.61 | 31.42 | 32.40 | 36.34 | 41.19 | 41.19 | |
| **FP** | 7.20 | 7.91 | 8.98 | 10.47 | 12.60 | 12.60 | |

**(BR)** denotes Brakemotor

Dimensions in Inches
DIMENSIONS
ALTERNATE SHAFTS SEE PAGES 566 - 573


Send Quote Requests to info@automatedpt.com
Call +1(800)985-6929 To Order or Order Online At Nordgearmotors.com

# SK 9042.1 + NEMA





DRIVESYSTEMS

## SK 9042.1

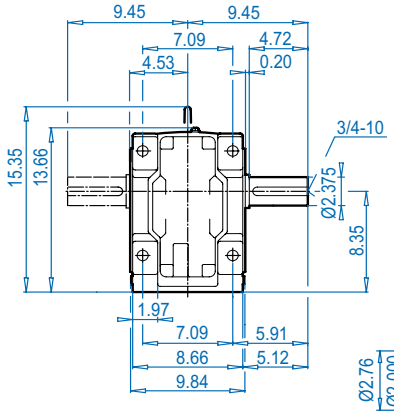


## SK 9042.1AX

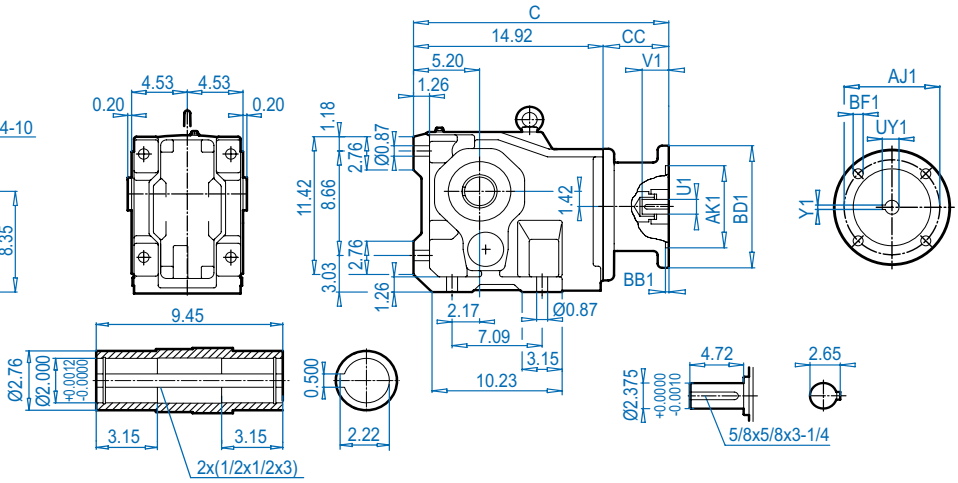


DIMENSIONS

Dimensions in Inches

## SK 9042.1VF

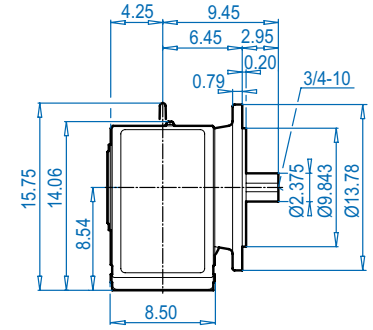


## SK 9042.1AF

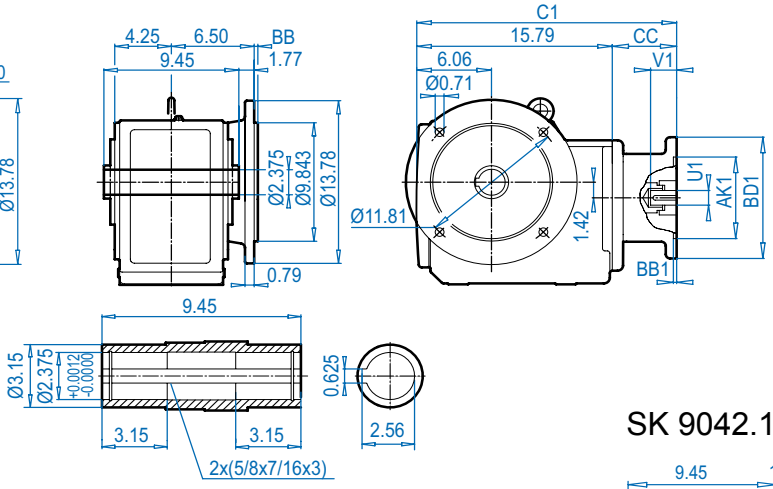


ALTERNATE SHAFTS SEE PAGES 566 - 573

## SK 9042.1AXB ⇨🕮 574

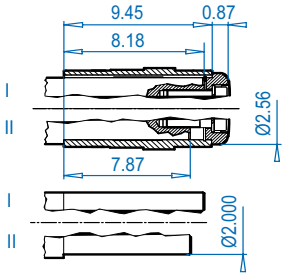


## SK 9042.1AFB ⇨🕮 574

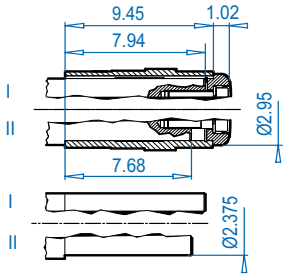


### NEMA Dimensions

| Type | AJ1 | AK1 | BB1 | BD1 | BF1 | U1 | V1 | UY1 | Y1 | C | C1 | CC |
|---|---|---|---|---|---|---|---|---|---|---|---|---|
| **56C** | 5.88 | 4.500 | 0.20 | 6.54 | 0.43 | 0.625 | 2.06 | 0.71 | 0.188 | 19.22 | 20.09 | 4.30 |
| **140TC** | 5.88 | 4.500 | 0.20 | 6.54 | 0.43 | 0.875 | 2.12 | 0.96 | 0.188 | 19.22 | 20.09 | 4.30 |
| **180TC** | 7.25 | 8.500 | 0.23 | 9.17 | 0.59 | 1.125 | 2.62 | 1.24 | 0.250 | 22.82 | 23.69 | 7.90 |
| **210TC** | 7.25 | 8.500 | 0.23 | 9.17 | 0.59 | 1.375 | 3.12 | 1.52 | 0.312 | 22.82 | 23.69 | 7.90 |
| **250TC** | 7.25 | 8.500 | 0.23 | 9.17 | 0.59 | 1.625 | 3.75 | 1.80 | 0.375 | 22.82 | 23.69 | 7.90 |


Send Quote Requests to info@automatedpt.com
Call +1(800)985-6929 To Order or Order Online At Nordgearmotors.com

DRIVESYSTEMS

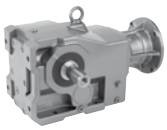



# SK 9042.1 + NEMA

## SK 9042.1AZ

**NEMA Input**

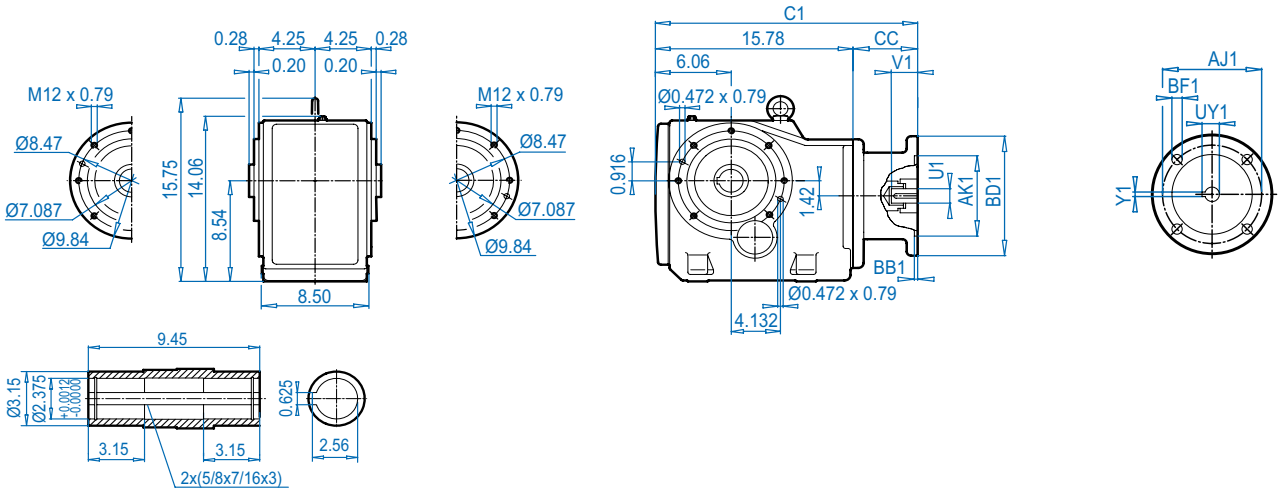


## SK 9042.1AZ**K**

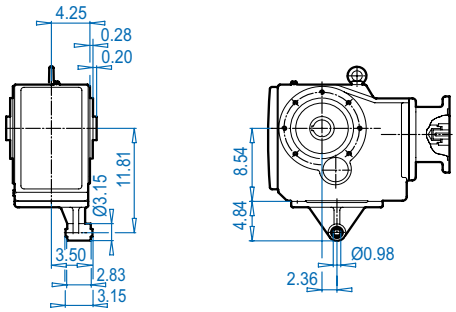


## SK 9042.1AZ**D**

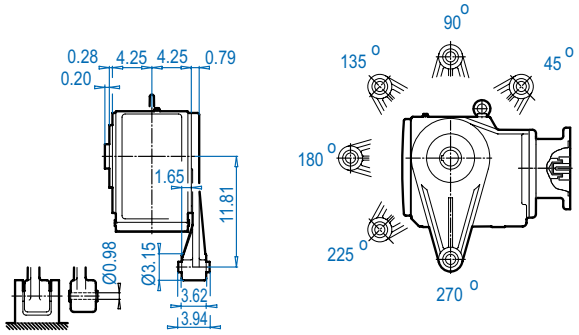


## SK 9042.1AZ**B** ⇨🕮 574

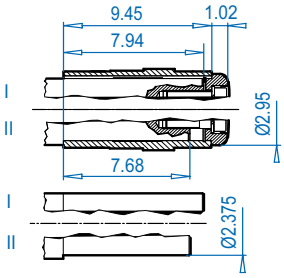


## SK 9042.1AZ**S** ⇨🕮 571

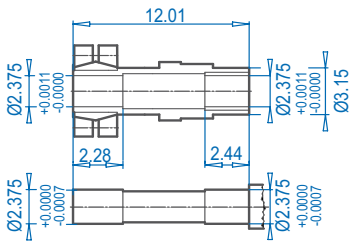


## SK 9042.1AZ**SH**

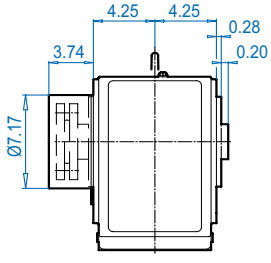


### NEMA Dimensions

| Type | AJ1 | AK1 | BB1 | BD1 | BF1 | U1 | V1 | UY1 | Y1 | C1 | CC |
|---|---|---|---|---|---|---|---|---|---|---|---|
| **56C** | 5.88 | 4.500 | 0.18 | 6.54 | 0.43 | 0.625 | 2.06 | 0.71 | 0.188 | 20.09 | 4.30 |
| **140TC** | 5.88 | 4.500 | 0.18 | 6.54 | 0.43 | 0.875 | 2.12 | 0.96 | 0.188 | 20.09 | 4.30 |
| **180TC** | 7.25 | 8.500 | 0.23 | 9.17 | 0.59 | 1.125 | 2.62 | 1.24 | 0.250 | 23.69 | 7.90 |
| **210TC** | 7.25 | 8.500 | 0.23 | 9.17 | 0.59 | 1.375 | 3.12 | 1.52 | 0.312 | 23.69 | 7.90 |
| **250TC** | 7.25 | 8.500 | 0.23 | 9.17 | 0.59 | 1.625 | 3.75 | 1.80 | 0.375 | 23.69 | 7.90 |




Send Quote Requests to info@automatedpt.com
Call +1(800)985-6929 To Order or Order Online At Nordgearmotors.com

# SK 9043.1 + Motor




DRIVESYSTEMS

DIMENSIONS
Dimensions in Inches

## SK 9043.1

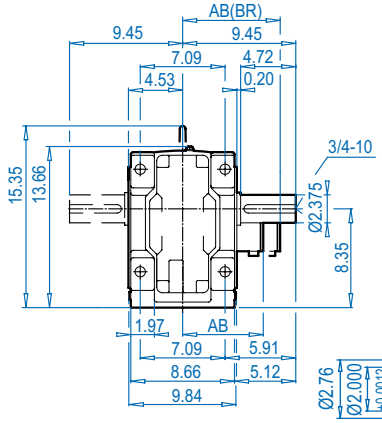


## SK 9043.1AX

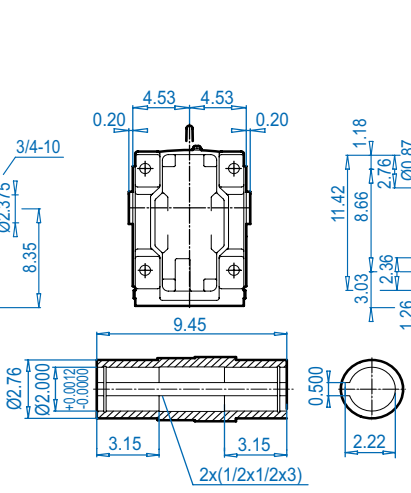


## SK 9043.1VF

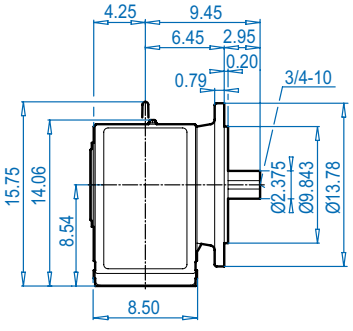


## SK 9043.1AF

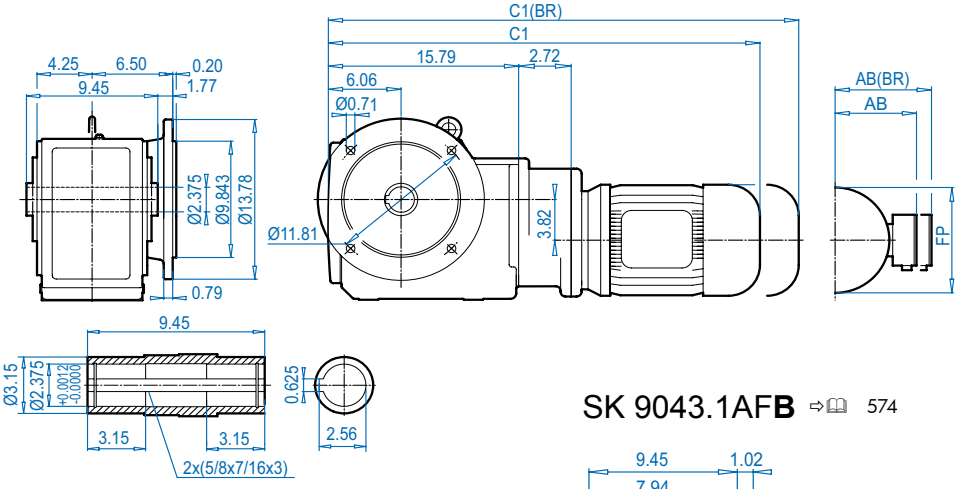


## SK 9043.1AX**B** ⇨🕮 574

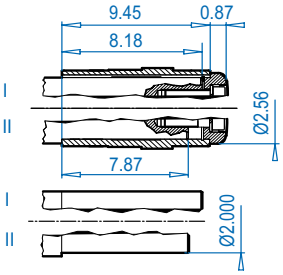


## SK 9043.1AF**B** ⇨🕮 574

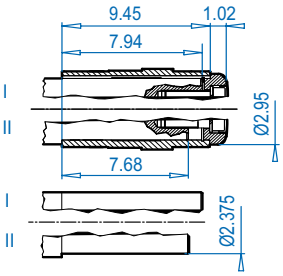


### Motor dimensions

| Standard efficiency | 71S/L | 80S/L | 90S/L | 100L | | | For Other Connection Possibilities please see ⇨🕮 555 & 557 |
|---|---|---|---|---|---|---|---|
| Energy efficiency | | 80LH | 90SH/LH | 100LH | | | |
| AB | 4.88 | 5.59 | 5.79 | 6.65 | | |  |
| AB (BR) | 5.24 | 5.63 | 5.83 | 6.26 | | | |
| C1 | 27.56 | 28.54 | 30.16 | 31.34 | | | |
| C1 (BR) | 29.84 | 31.06 | 33.11 | 34.92 | | | |
| C | 26.69 | 27.68 | 29.29 | 30.47 | | | |
| C (BR) | 28.98 | 30.20 | 32.24 | 34.06 | | | |
| FP | 5.71 | 6.50 | 7.20 | 7.91 | | | |

**(BR)** denotes Brakemotor

ALTERNATE SHAFTS SEE PAGES 566 - 573


Send Quote Requests to info@automatedpt.com
Call +1(800)985-6929 To Order or Order Online At Nordgearmotors.com

DRIVESYSTEMS



# SK 9043.1 + Motor

## SK 9043.1AZ

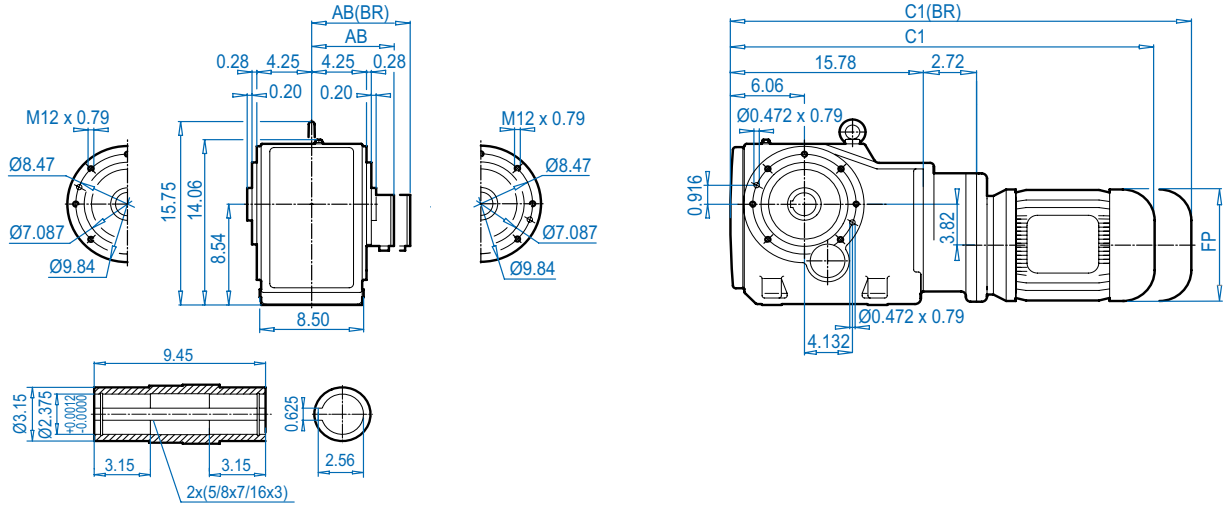


## SK 9043.1AZ**K**

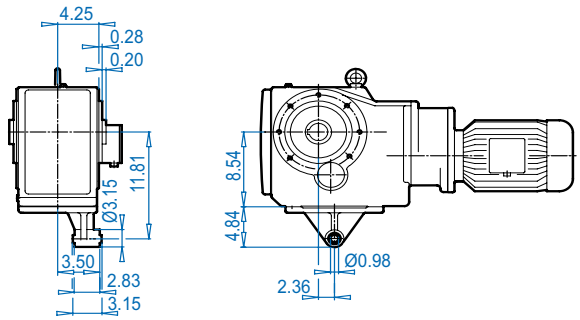


## SK 9043.1AZ**D**

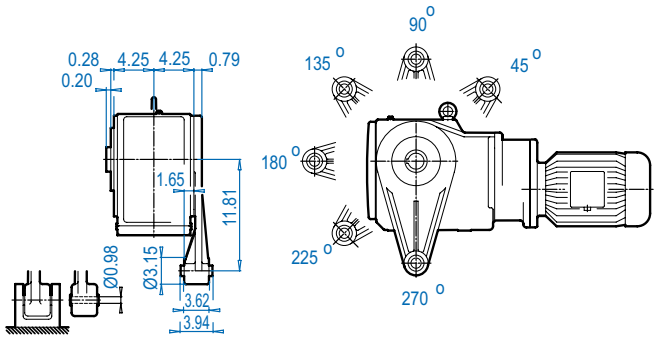


## SK 9043.1AZ**B** ⇨🕮 574

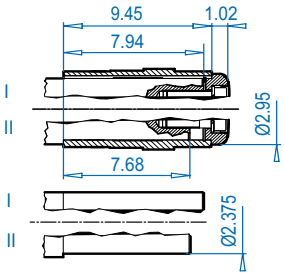


## SK 9043.1AZ**S** ⇨🕮 571

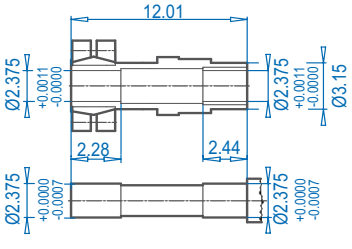


## SK 9043.1AZ**SH**

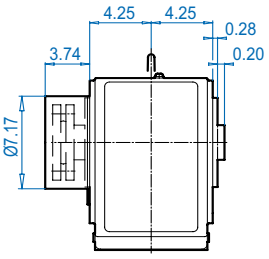


### Motor dimensions

| Standard efficiency | 71S/L | 80S/L | 90S/L | 100L | | | For Other Connection Possibilities please see ⇨🕮 555 & 557 |
|---|---|---|---|---|---|---|---|
| Energy efficiency | | 80LH | 90SH/LH | 100LH | | | |
| AB | 4.88 | 5.59 | 5.79 | 6.65 | | | 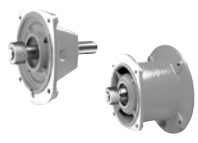 |
| AB (BR) | 5.24 | 5.63 | 5.83 | 6.26 | | | |
| C1 | 27.56 | 28.54 | 30.16 | 31.34 | | | |
| C1 (BR) | 29.84 | 31.06 | 33.11 | 34.92 | | | |
| FP | 5.71 | 6.50 | 7.20 | 7.91 | | | |

**(BR )**denotes Brakemotor




Send Quote Requests to info@automatedpt.com
Call +1(800)985-6929 To Order or Order Online At Nordgearmotors.com

# SK 9043.1 + NEMA




DRIVESYSTEMS

## SK 9043.1

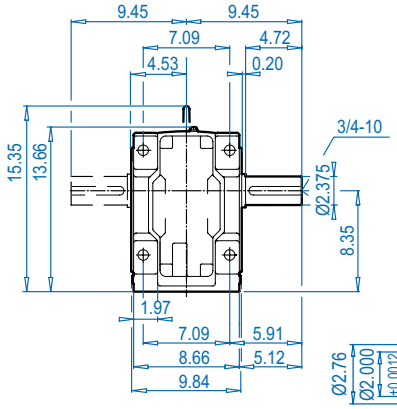


## SK 9043.1AX

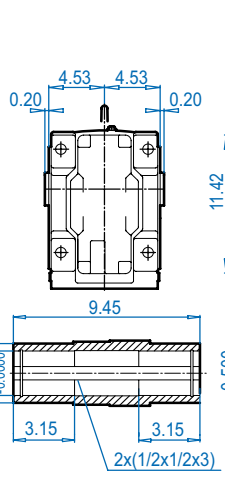


## NEMA Input

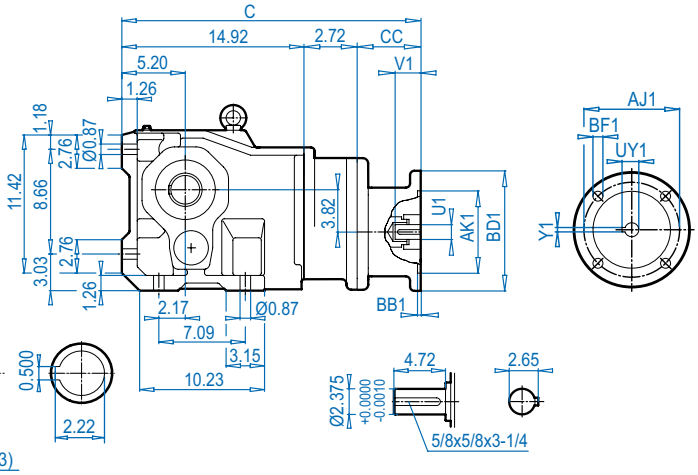


DIMENSIONS
Dimensions in Inches

## SK 9043.1VF

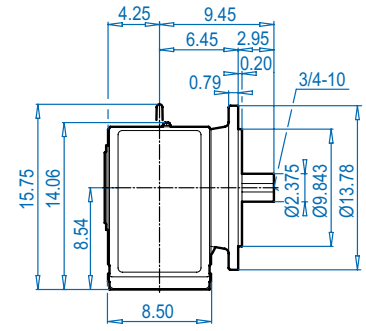


## SK 9043.1AF

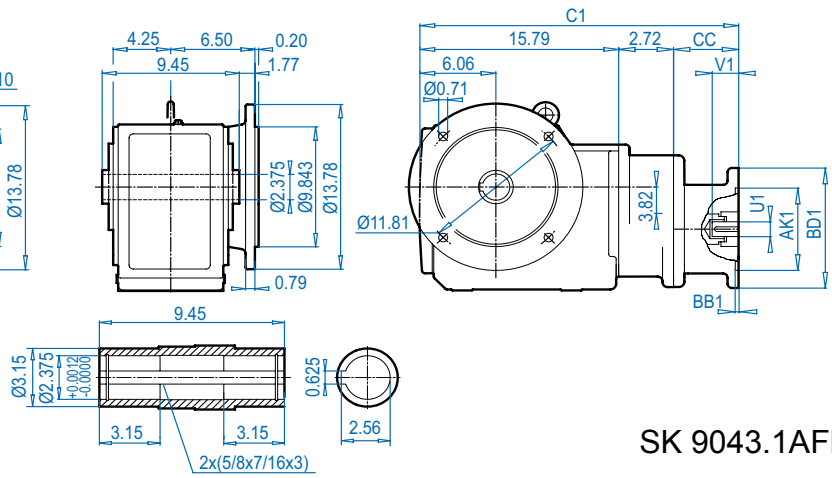


ALTERNATE SHAFTS SEE PAGES 566 - 573

## SK 9043.1AX**B** ⇨🕮 574

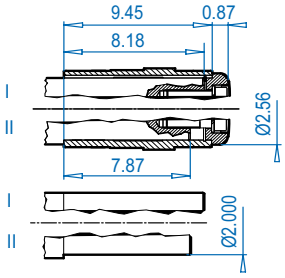


## SK 9043.1AF**B** ⇨🕮 574

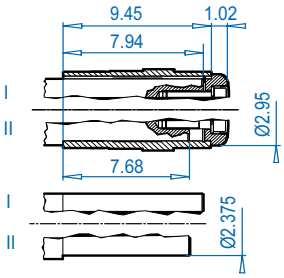


### NEMA Dimensions

| Type | AJ1 | AK1 | BB1 | BD1 | BF1 | U1 | V1 | UY1 | Y1 | C | C1 | CC |
|---|---|---|---|---|---|---|---|---|---|---|---|---|
| **56C** | 5.88 | 4.500 | 0.18 | 6.54 | 0.43 | 0.625 | 2.06 | 0.71 | 0.188 | 22.24 | 23.11 | 460 |
| **140TC** | 5.88 | 4.500 | 0.18 | 6.54 | 0.43 | 0.875 | 2.12 | 0.96 | 0.188 | 22.24 | 23.11 | 4.60 |
| **180 TC** | 7.25 | 8.500 | 0.23 | 9.17 | 0.59 | 1.125 | 2.62 | 1.24 | 0.250 | 24.24 | 25.11 | 6.60 |


Send Quote Requests to info@automatedpt.com
Call +1(800)985-6929 To Order or Order Online At Nordgearmotors.com

DRIVESYSTEMS

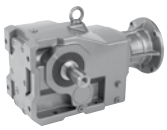



# SK 9043.1 + NEMA

## SK 9043.1AZ

**NEMA Input**

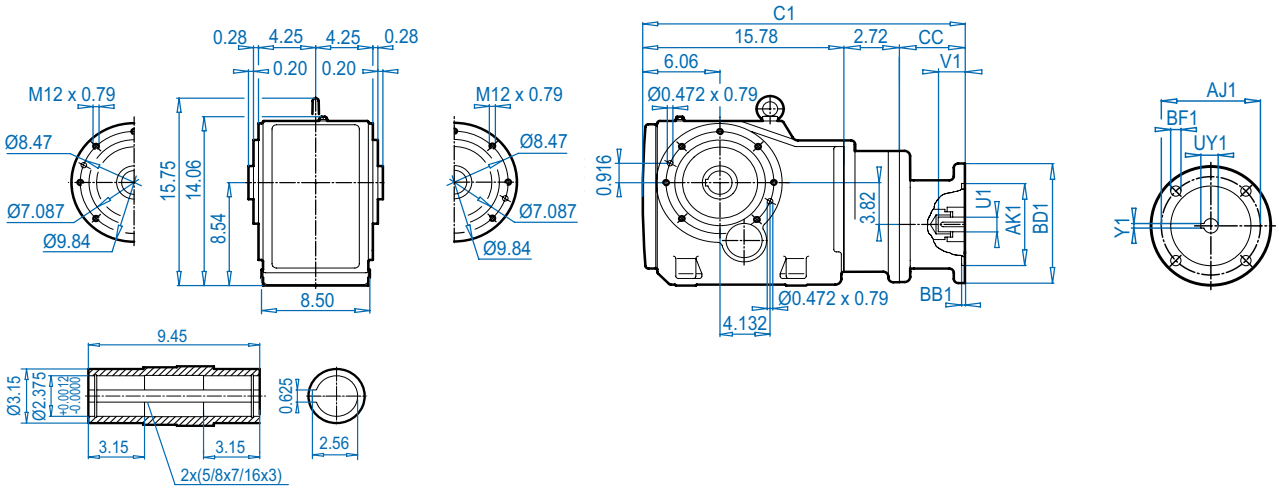


Dimensions in Inches
DIMENSIONS

## SK 9043.1AZ**K**

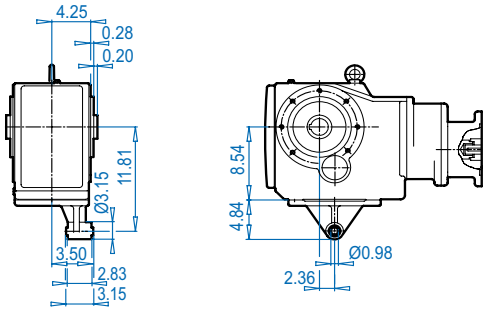


## SK 9043.1AZ**D**

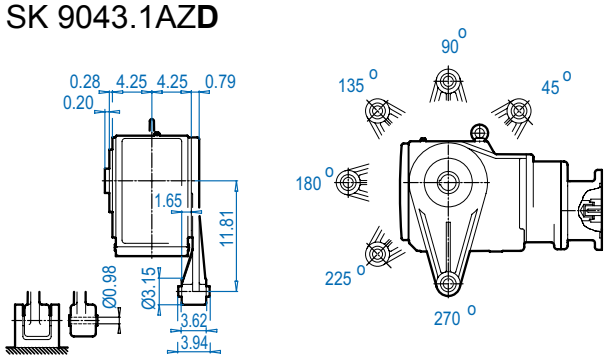


## SK 9043.1AZ**B** ⇨🕮 574

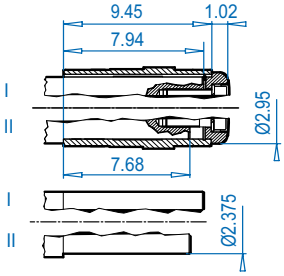


## SK 9043.1AZ**S** ⇨🕮 571

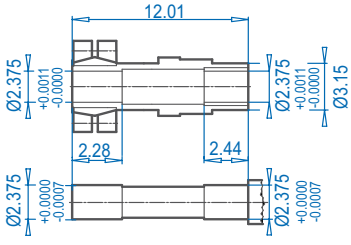


## SK 9043.1AZ**SH**

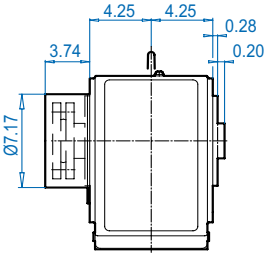


ALTERNATE SHAFTS SEE PAGES 566 - 573

**NEMA Dimensions**

| Type | AJ1 | AK1 | BB1 | BD1 | BF1 | U1 | V1 | UY1 | Y1 | C1 | CC |
|---|---|---|---|---|---|---|---|---|---|---|---|
| **56C** | 5.88 | 4.500 | 0.18 | 6.54 | 0.43 | 0.625 | 2.06 | 0.71 | 0.188 | 23.11 | 460 |
| **140TC** | 5.88 | 4.500 | 0.18 | 6.54 | 0.43 | 0.875 | 2.12 | 0.96 | 0.188 | 23.11 | 4.60 |
| **180 TC** | 7.25 | 8.500 | 0.23 | 9.17 | 0.59 | 1.125 | 2.62 | 1.24 | 0.250 | 25.11 | 6.60 |


Send Quote Requests to info@automatedpt.com
Call +1(800)985-6929 To Order or Order Online At Nordgearmotors.com

# SK 9052.1 + Motor




DRIVESYSTEMS



## SK 9052.1

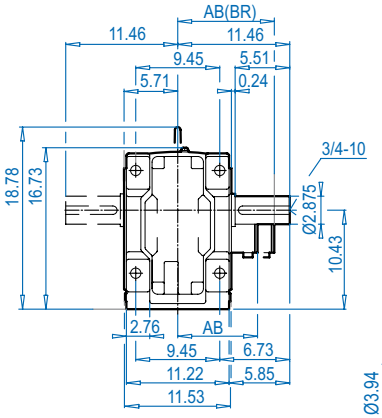


## SK 9052.1AX

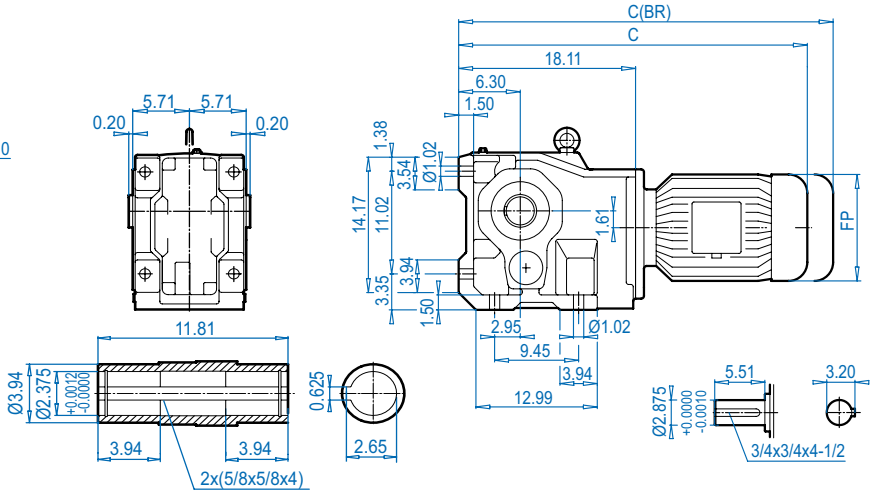


## SK 9052.1VF

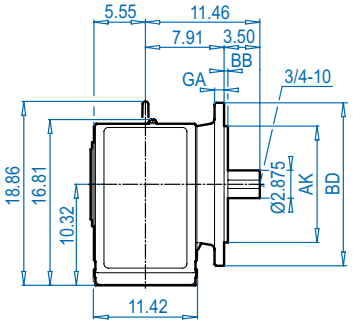


## SK 9052.1AF

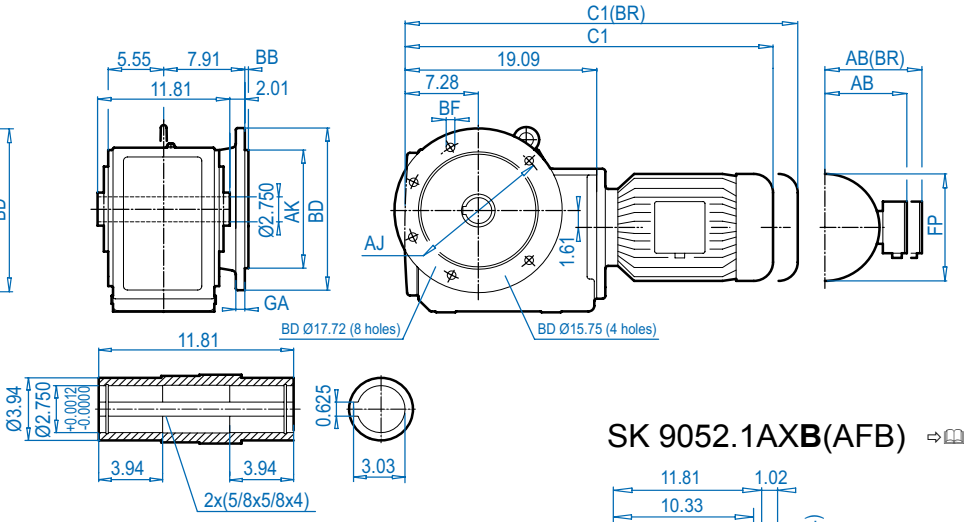


## SK 9052.1AX**B**(AFB) ⇨📖 574

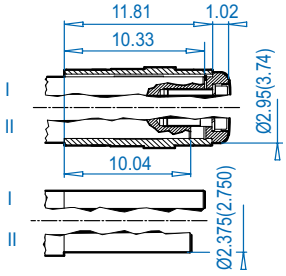


### Mounting flange

| BD (mm) | AJ | AK | BB | BF | GA |
|---|---|---|---|---|---|
| 15.75 (400) | 13.78 | 11.811 + 0.0000 - 0.0014 | 0.20 | 0.69 | 0.79 |
| 17.72 (450) | 15.75 | 13.780 + 0.0000 - 0.0014 | 0.20 | 0.69 | 0.87 |

### Motor dimensions

| Standard eff. | 90S/L | 100L | | 132S/M | 160M/L | | 180MX/LX | | For Other Connection Possibilities please see ⇨📖 555 & 557 |
|---|---|---|---|---|---|---|---|---|---|
| Energy eff. | 90SH/LH | 100LH | 112MH | 132SH/MH | 160MH | 160LH | | 180MH/LH | |
| AB | 5.79 | 6.65 | 7.05 | 8.03 | 8.90 | 8.90 | 10.20 | 10.20 |  |
| AB (BR) | 5.83 | 6.26 | 6.69 | 7.72 | 8.90 | 8.90 | 10.20 | 10.20 | |
| C1 | 30.04 | 31.22 | 32.13 | 35.51 | 37.91 | 37.91 | 42.79 | 42.79 | |
| C1 (BR) | 32.99 | 34.80 | 35.79 | 39.72 | 44.49 | 44.49 | 46.92 | 46.92 | |
| C | 28.98 | 30.16 | 31.06 | 34.45 | 36.93 | 36.93 | 41.81 | 41.81 | |
| C (BR) | 31.93 | 33.74 | 34.72 | 38.66 | 43.51 | 43.51 | 45.94 | 45.94 | |
| FP | 7.20 | 7.91 | 8.98 | 10.47 | 12.60 | 12.60 | 14.09 | 14.09 | |

**(BR)** denotes Brakemotor


Send Quote Requests to info@automatedpt.com
Call +1(800)985-6929 To Order or Order Online At Nordgearmotors.com

DRIVESYSTEMS



# SK 9052.1 + Motor

## SK 9052.1AZ

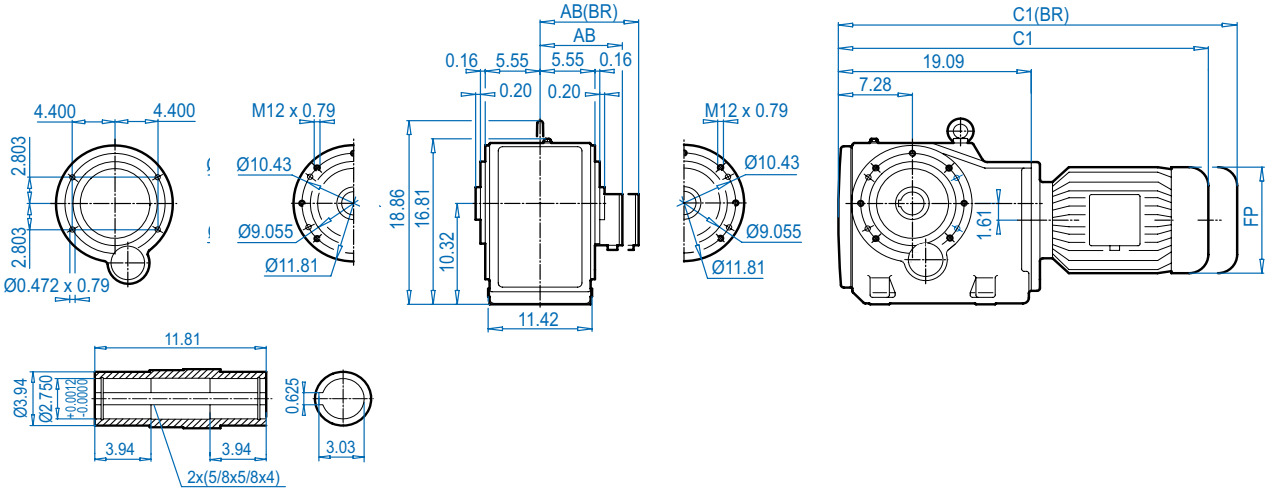


## SK 9052.1AZ**K**

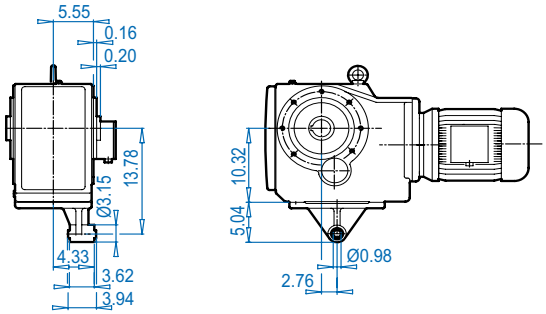


## SK 9052.1AZ**D**

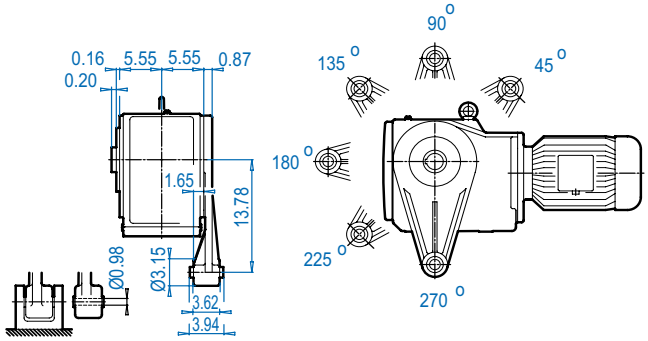


## SK 9052.1AZ**B** ⇨🕮 574

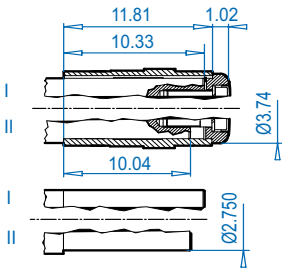


## SK 9052.1AZ**S** ⇨🕮 571

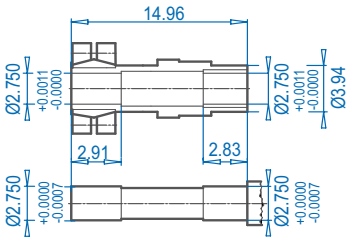


## SK 9052.1AZ**SH**

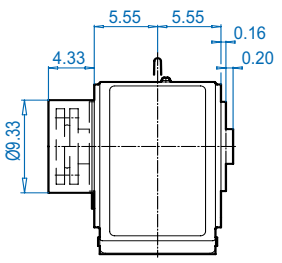


### Motor dimensions

| Standard eff. | 90S/L | 100L | | 132S/M | 160M/L | | 180MX/LX | | For Other Connection Possibilities please see ⇨🕮 555 & 557 |
|---|---|---|---|---|---|---|---|---|---|
| Energy eff. | 90SH/LH | 100LH | 112MH | 132SH/MH | 160MH | 160LH | | 180MH/LH | |
| AB | 5.79 | 6.65 | 7.05 | 8.03 | 8.90 | 8.90 | 10.20 | 10.20 | 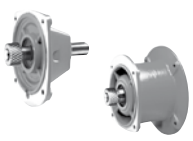 |
| AB (BR) | 5.83 | 6.26 | 6.69 | 7.72 | 8.90 | 8.90 | 10.20 | 10.20 | |
| C1 | 30.04 | 31.22 | 32.13 | 35.51 | 37.91 | 37.91 | 42.79 | 42.79 | |
| C1 (BR) | 32.99 | 34.80 | 35.79 | 39.72 | 44.49 | 44.49 | 46.92 | 46.92 | |
| FP | 7.20 | 7.91 | 8.98 | 10.47 | 12.60 | 12.60 | 14.09 | 14.09 | |

**(BR)** denotes Brakemotor

Dimensions in Inches
DIMENSIONS
ALTERNATE SHAFTS SEE PAGES 566 - 573


Send Quote Requests to info@automatedpt.com
Call +1(800)985-6929 To Order or Order Online At Nordgearmotors.com

# SK 9052.1 + NEMA




## SK 9052.1

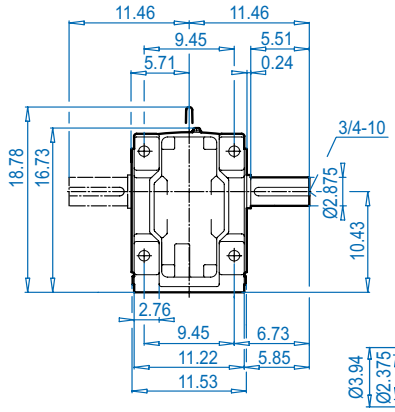


## SK 9052.1AX

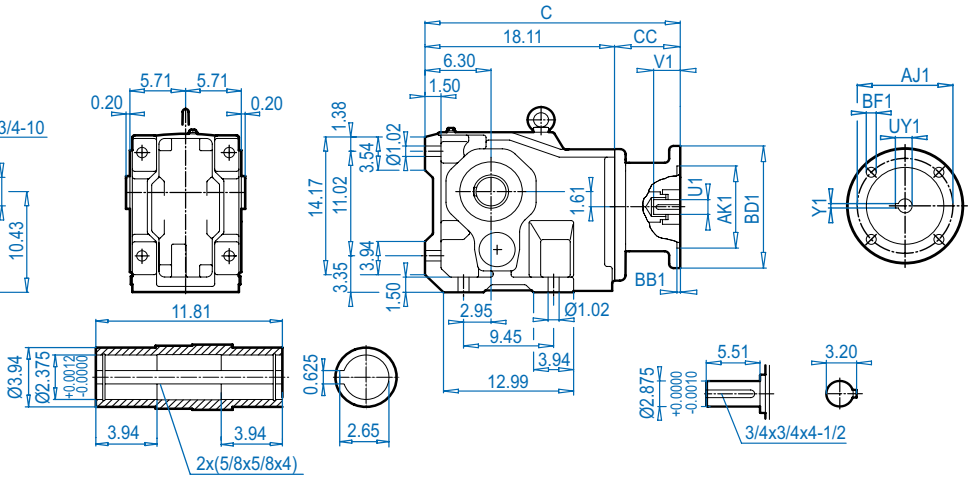


## NEMA Input

DIMENSIONS — Dimensions in Inches

## SK 9052.1VF

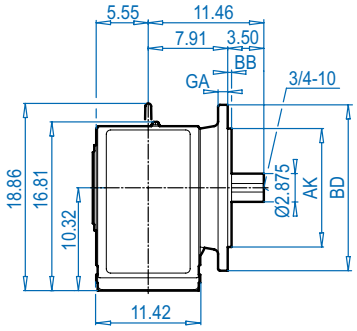


## SK 9052.1AF

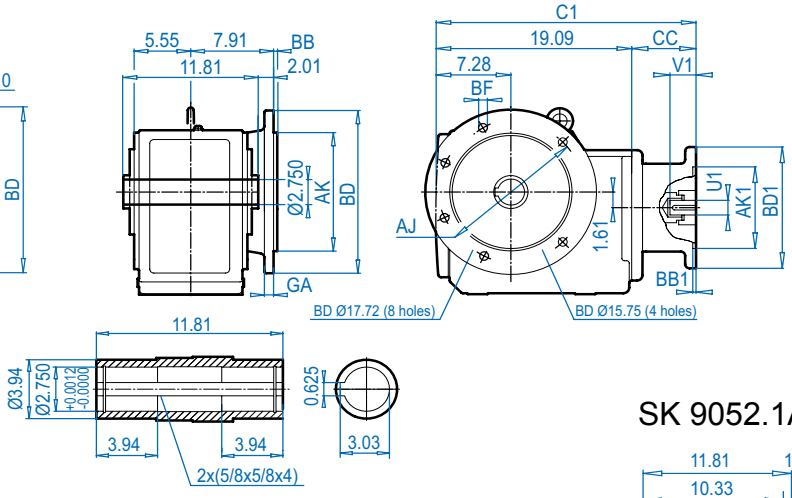


ALTERNATE SHAFTS SEE PAGES 566 - 573

## SK 9052.1AX**B**(AFB) ⇨🕮 574

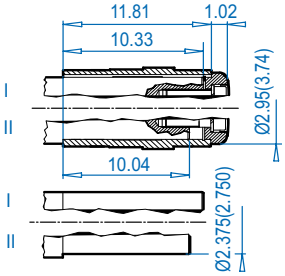


### Mounting flange

| BD (mm) | AJ | AK | BB | BF | GA |
|---|---|---|---|---|---|
| 15.75 (400) | 13.78 | 11.811 + 0.0000 - 0.0014 | 0.20 | 0.69 | 0.79 |
| 17.72 (450) | 15.75 | 13.780 + 0.0000 - 0.0014 | 0.20 | 0.69 | 0.87 |

### NEMA Dimensions

| Type | AJ1 | AK1 | BB1 | BD1 | BF1 | U1 | V1 | UY1 | Y1 | C | C1 | CC |
|---|---|---|---|---|---|---|---|---|---|---|---|---|
| **56C** | 5.88 | 4.500 | 0.18 | 6.54 | 0.43 | 0.625 | 2.06 | 0.71 | 0.188 | 22.41 | 23.39 | 4.30 |
| **140TC** | 5.88 | 4.500 | 0.18 | 6.54 | 0.43 | 0.875 | 2.12 | 0.96 | 0.188 | 22.41 | 23.39 | 4.30 |
| **180TC** | 7.25 | 8.500 | 0.23 | 9.17 | 0.59 | 1.125 | 2.62 | 1.24 | 0.250 | 26.01 | 26.99 | 7.90 |
| **210TC** | 7.25 | 8.500 | 0.23 | 9.17 | 0.59 | 1.375 | 3.12 | 1.52 | 0.312 | 26.01 | 26.99 | 7.90 |
| **250TC** | 7.25 | 8.500 | 0.23 | 9.17 | 0.59 | 1.625 | 3.75 | 1.80 | 0.375 | 26.01 | 26.99 | 7.90 |
| **280TC** | 9.00 | 10.500 | 0.23 | 13.78 | 0.59 | 1.875 | 4.38 | 2.10 | 0.500 | 26.42 | 27.40 | 8.31 |


Send Quote Requests to info@automatedpt.com
Call +1(800)985-6929 To Order or Order Online At Nordgearmotors.com

DRIVESYSTEMS





# SK 9052.1 + NEMA

## SK 9052.1AZ

**NEMA Input**

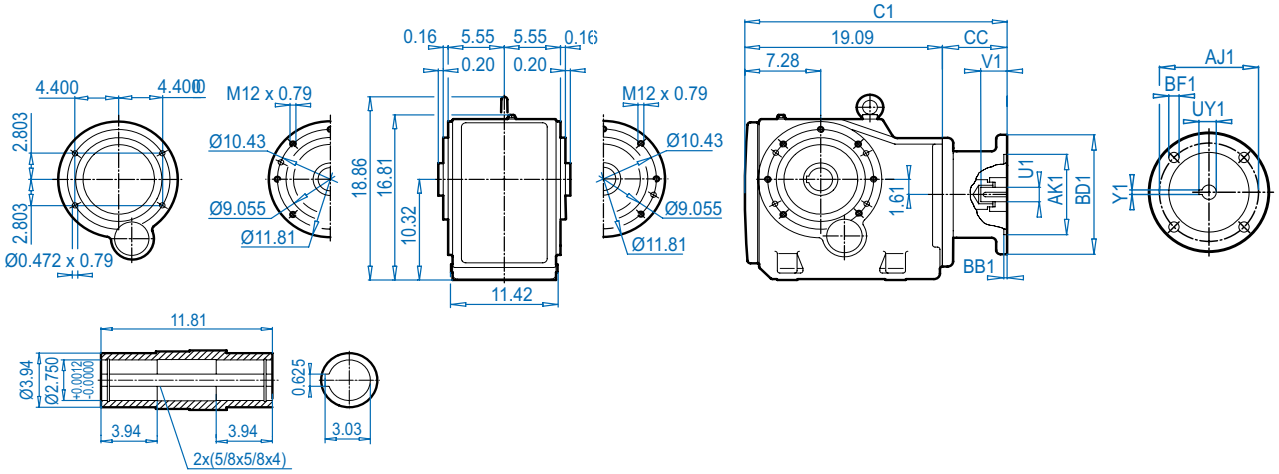


Dimensions in Inches
DIMENSIONS

## SK 9052.1AZ**K**

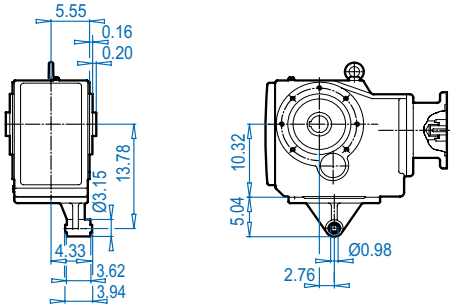


## SK 9052.1AZ**D**

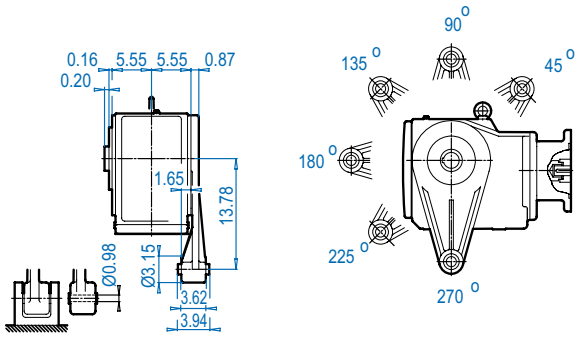


## SK 9052.1AZ**B** ⇨🕮 574

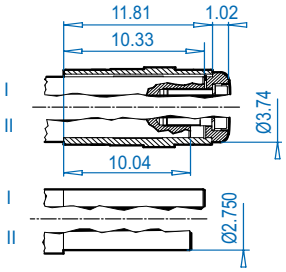


## SK 9052.1AZ**S** ⇨🕮 571

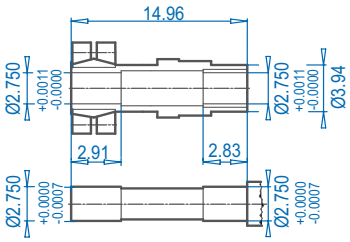


## SK 9052.1AZ**SH**

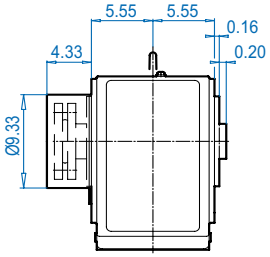


ALTERNATE SHAFTS SEE PAGES 566 - 573

**NEMA Dimensions**

| Type | AJ1 | AK1 | BB1 | BD1 | BF1 | U1 | V1 | UY1 | Y1 | C1 | CC |
|---|---|---|---|---|---|---|---|---|---|---|---|
| **56C** | 5.88 | 4.500 | 0.18 | 6.54 | 0.43 | 0.625 | 2.06 | 0.71 | 0.188 | 23.39 | 4.30 |
| **140TC** | 5.88 | 4.500 | 0.18 | 6.54 | 0.43 | 0.875 | 2.12 | 0.96 | 0.188 | 23.39 | 4.30 |
| **180TC** | 7.25 | 8.500 | 0.23 | 9.17 | 0.59 | 1.125 | 2.62 | 1.24 | 0.250 | 26.99 | 7.90 |
| **210TC** | 7.25 | 8.500 | 0.23 | 9.17 | 0.59 | 1.375 | 3.12 | 1.52 | 0.312 | 26.99 | 7.90 |
| **250TC** | 7.25 | 8.500 | 0.23 | 9.17 | 0.59 | 1.625 | 3.75 | 1.80 | 0.375 | 26.99 | 7.90 |
| **280TC** | 9.00 | 10.500 | 0.23 | 13.78 | 0.59 | 1.875 | 4.38 | 2.10 | 0.500 | 27.40 | 8.31 |


Send Quote Requests to info@automatedpt.com
Call +1(800)985-6929 To Order or Order Online At Nordgearmotors.com

# SK 9053.1 + Motor




DRIVESYSTEMS

## SK 9053.1

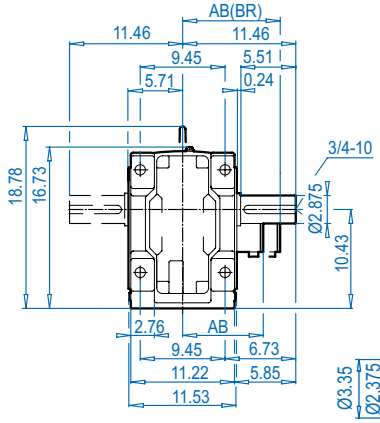


## SK 9053.1AX

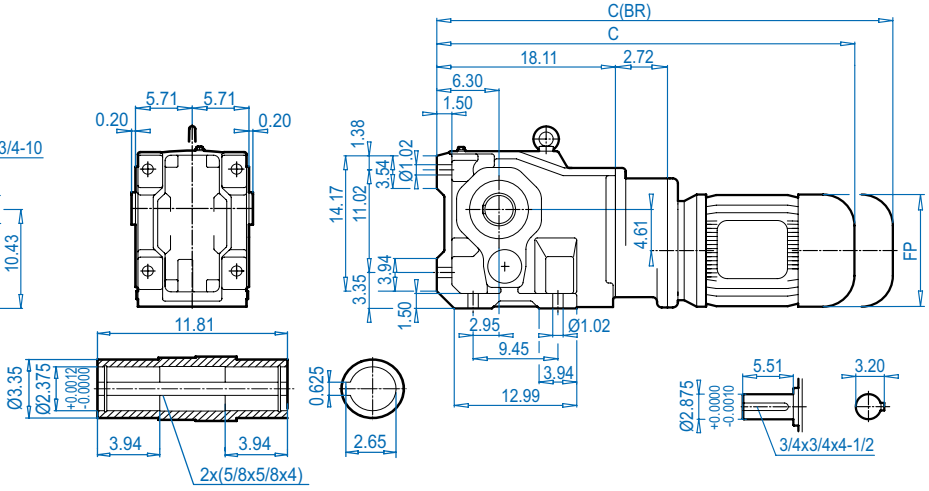


## SK 9053.1VF

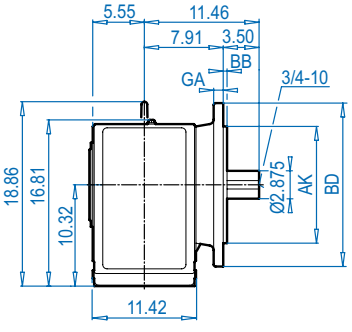


## SK 9053.1AF

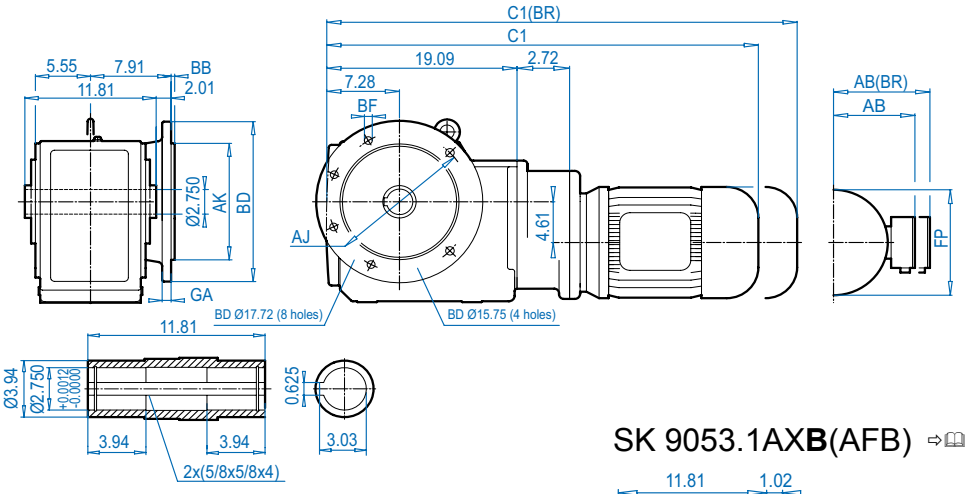


## SK 9053.1AX**B**(AFB) ⇨🕮 574

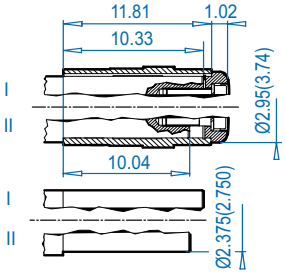


### Mounting flange

| BD (mm) | AJ | AK | BB | BF | GA |
|---|---|---|---|---|---|
| 15.75 (400) | 13.78 | 11.811 $^{+\ 0.0000}_{-\ 0.0014}$ | 0.20 | 069 | 0.79 |
| 17.72 (450) | 15.75 | 13.780 $^{+\ 0.0000}_{-\ 0.0014}$ | 0.20 | 0.69 | 0.87 |

### Motor dimensions

| Standard efficiency | 71S/L | 80S/L | 90S/L | 100L | | | For Other Connection Possibilities please see ⇨🕮 555 & 557 |
|---|---|---|---|---|---|---|---|
| Energy efficiency | | 80LH | 90SH/LH | 100LH | | | |
| AB | 4.88 | 5.59 | 5.79 | 6.65 | | |  |
| AB (BR) | 5.24 | 5.63 | 5.83 | 6.26 | | | |
| C1 | 30.95 | 31.93 | 33.54 | 34.72 | | | |
| C1 (BR) | 33.23 | 34.45 | 36.50 | 38.31 | | | |
| C | 29.88 | 30.87 | 32.48 | 33.66 | | | |
| C (BR) | 32.17 | 33.39 | 35.43 | 37.24 | | | |
| FP | 5.71 | 6.50 | 7.20 | 7.91 | | | |

**(BR)** denotes Brakemotor

DIMENSIONS Dimensions in Inches
ALTERNATE SHAFTS SEE PAGES 566 - 573


Send Quote Requests to info@automatedpt.com
Call +1(800)985-6929 To Order or Order Online At Nordgearmotors.com



# SK 9053.1 + Motor

## SK 9053.1AZ

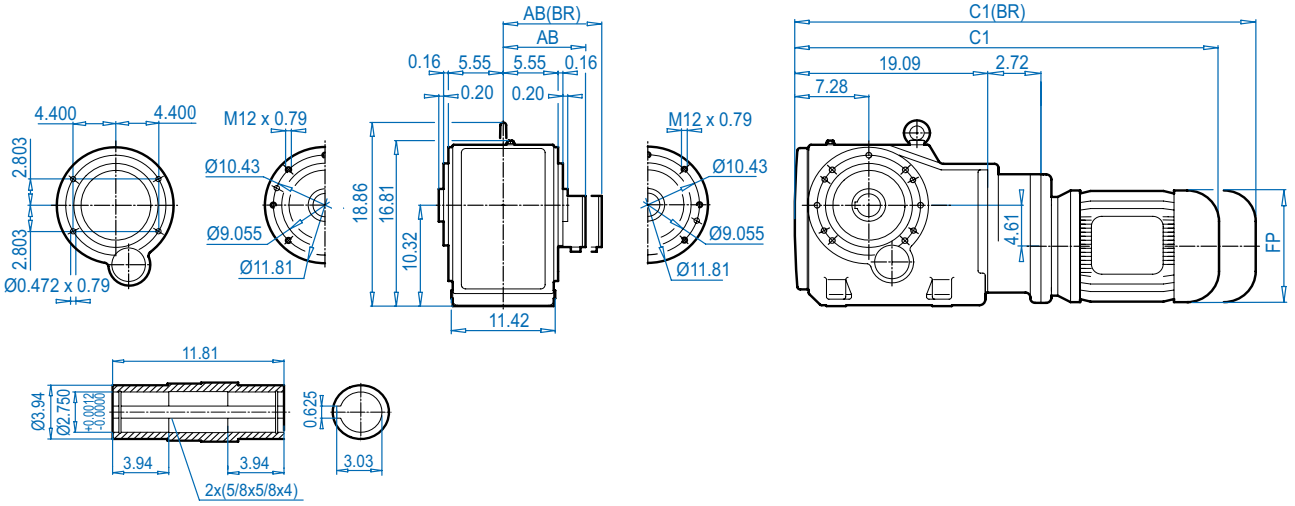


## SK 9053.1AZ**K**

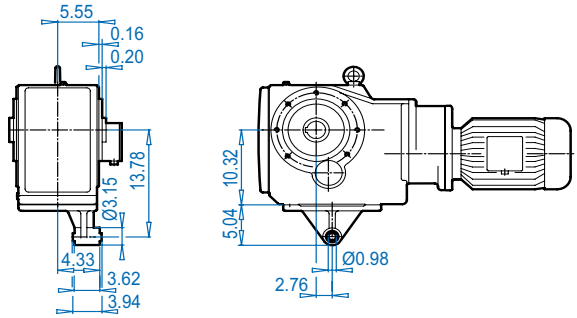


## SK 9053.1AZ**D**

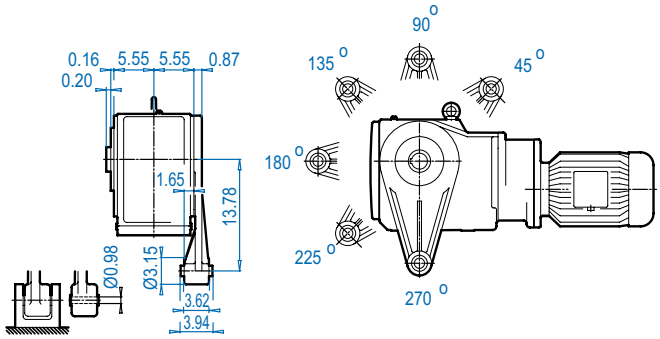


## SK 9053.1AZ**B** ⇨📖 574

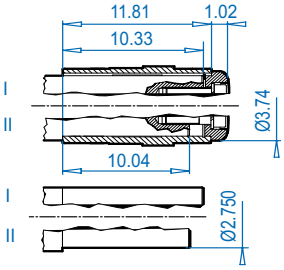


## SK 9053.1AZ**S** ⇨📖 571

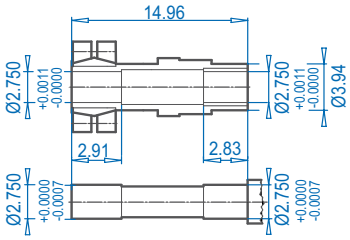


## SK 9053.1AZ**SH**

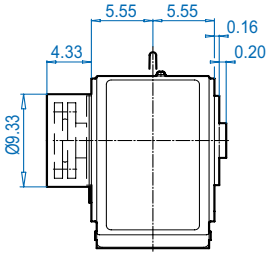


### Motor dimensions

| Standard efficiency | 71S/L | 80S/L | 90S/L | 100L | | | For Other Connection Possibilities please see ⇨📖 555 & 557 |
|---|---|---|---|---|---|---|---|
| Energy efficiency | | 80LH | 90SH/LH | 100LH | | | |
| AB | 4.88 | 5.59 | 5.79 | 6.65 | | | |
| AB (BR) | 5.24 | 5.63 | 5.83 | 6.26 | | | |
| C1 | 30.95 | 31.93 | 33.54 | 34.72 | | | |
| C1 (BR) | 33.23 | 34.45 | 36.50 | 38.31 | | | |
| FP | 5.71 | 6.50 | 7.20 | 7.91 | | | |

**(BR)** denotes Brakemotor




Send Quote Requests to info@automatedpt.com
Call +1(800)985-6929 To Order or Order Online At Nordgearmotors.com

# SK 9053.1 + NEMA




DRIVESYSTEMS

## SK 9053.1

## SK 9053.1AX

## NEMA Input

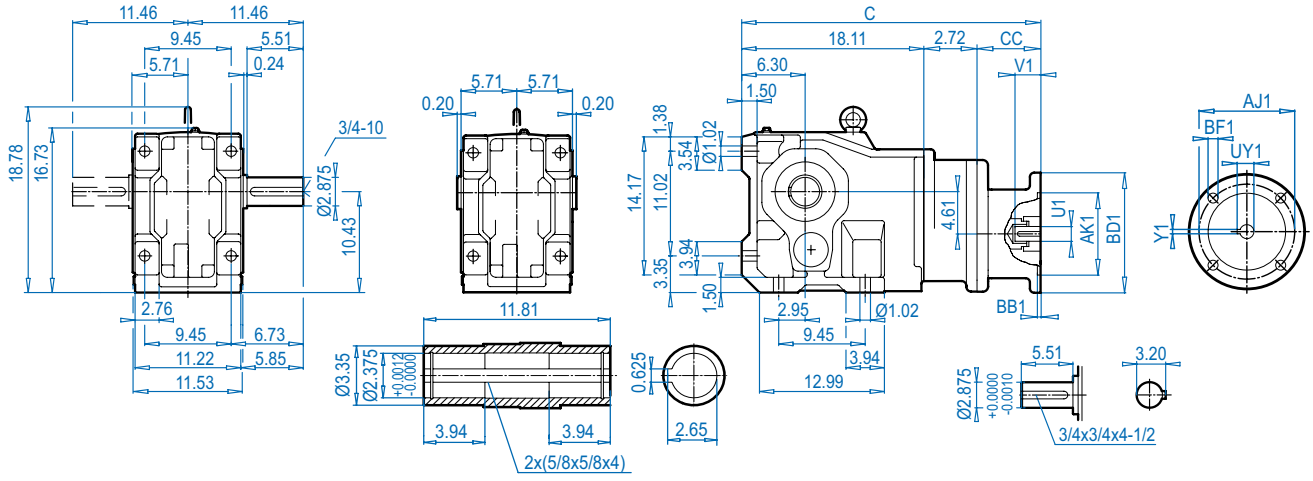


## SK 9053.1VF

## SK 9053.1AF

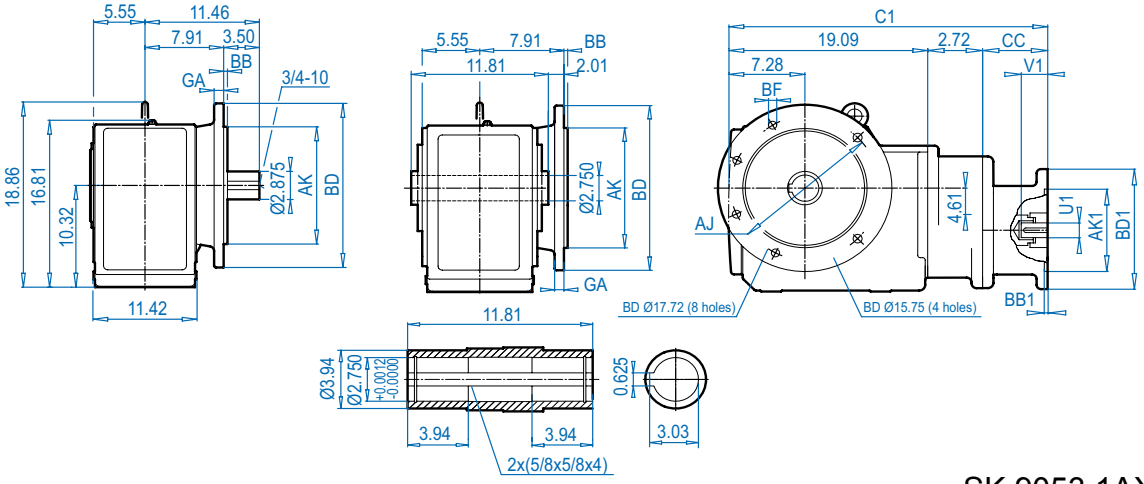


DIMENSIONS
Dimensions in Inches
ALTERNATE SHAFTS SEE PAGES 566 - 573

## SK 9053.1AX**B**(AFB) ⇨🕮 574

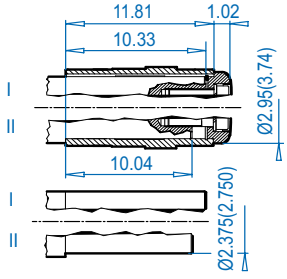


### Mounting flange

| BD (mm) | AJ | AK | BB | BF | GA |
|---|---|---|---|---|---|
| 15.75 (400) | 13.78 | 11.811 $^{+\ 0.0000}_{-\ 0.0014}$ | 0.20 | 0.69 | 0.79 |
| 17.72 (450) | 15.75 | 13.780 $^{+\ 0.0000}_{-\ 0.0014}$ | 0.20 | 0.69 | 0.87 |

### NEMA Dimensions

| Type | AJ1 | AK1 | BB1 | BD1 | BF1 | U1 | V1 | UY1 | Y1 | C | C1 | CC |
|---|---|---|---|---|---|---|---|---|---|---|---|---|
| **56C** | 5.88 | 4.500 | 0.18 | 6.54 | 0.43 | 0.625 | 2.06 | 0.71 | 0.188 | 25.43 | 26.41 | 4.60 |
| **140TC** | 5.88 | 4.500 | 0.18 | 6.54 | 0.43 | 0.875 | 2.12 | 0.96 | 0.188 | 25.43 | 26.41 | 4.60 |
| **180 TC** | 7.25 | 8.500 | 0.23 | 9.17 | 0.59 | 1.125 | 2.62 | 1.24 | 0.250 | 27.43 | 28.41 | 6.60 |


Send Quote Requests to info@automatedpt.com
Call +1(800)985-6929 To Order or Order Online At Nordgearmotors.com

DRIVESYSTEMS

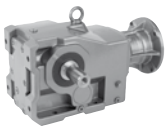



# SK 9053.1 + NEMA

## SK 9053.1AZ

**NEMA Input**

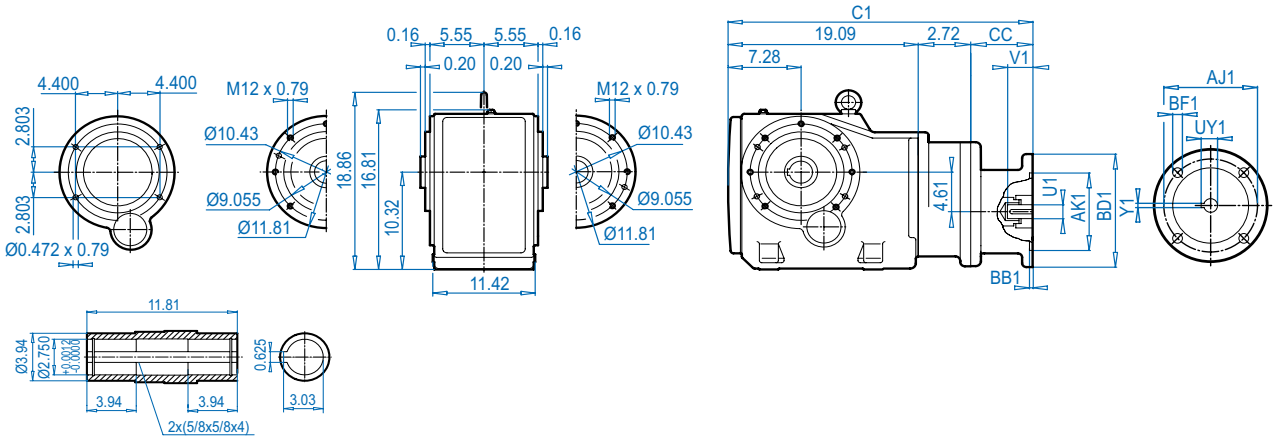


Dimensions in Inches
DIMENSIONS

## SK 9053.1AZ**K**

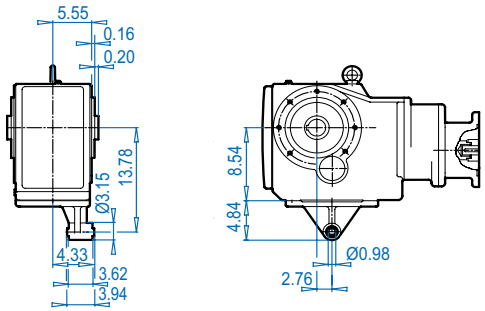


## SK 9053.1AZ**D**

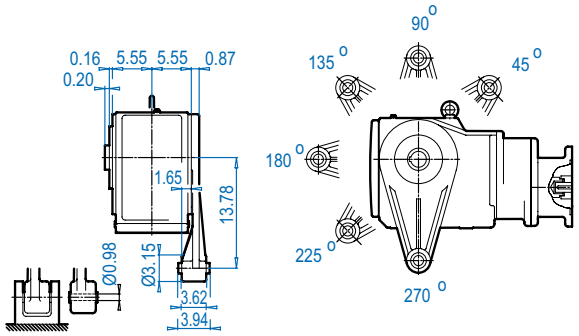


## SK 9053.1AZ**B** ⇨🕮 574

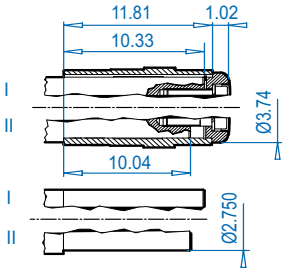


## SK 9053.1AZ**S** ⇨🕮 571

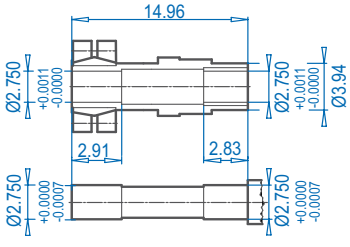


## SK 9053.1AZ**SH**

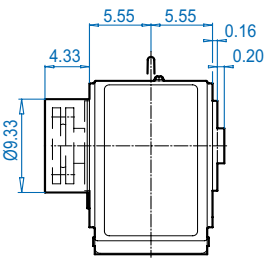


ALTERNATE SHAFTS SEE PAGES 566 - 573

**NEMA Dimensions**

| Type | AJ1 | AK1 | BB1 | BD1 | BF1 | U1 | V1 | UY1 | Y1 | C1 | CC |
|---|---|---|---|---|---|---|---|---|---|---|---|
| **56C** | 5.88 | 4.500 | 0.18 | 6.54 | 0.43 | 0.625 | 2.06 | 0.71 | 0.188 | 26.41 | 4.60 |
| **140TC** | 5.88 | 4.500 | 0.18 | 6.54 | 0.43 | 0.875 | 2.12 | 0.96 | 0.188 | 26.41 | 4.60 |
| **180 TC** | 7.25 | 8.500 | 0.23 | 9.17 | 0.59 | 1.125 | 2.62 | 1.24 | 0.250 | 28.41 | 6.60 |


Send Quote Requests to info@automatedpt.com
Call +1(800)985-6929 To Order or Order Online At Nordgearmotors.com

# SK 9072.1 + Motor




DRIVESYSTEMS

## SK 9072.1

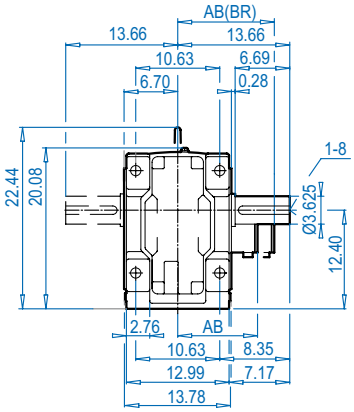


## SK 9072.1AX

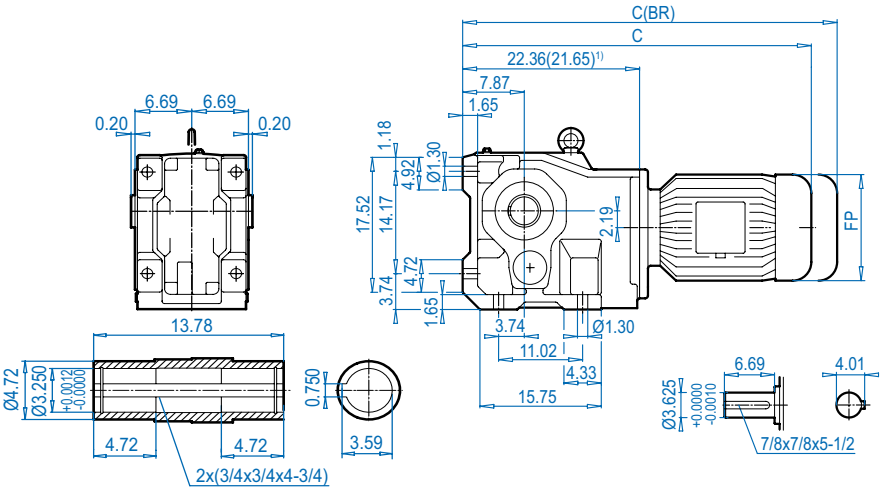


## SK 9072.1VF

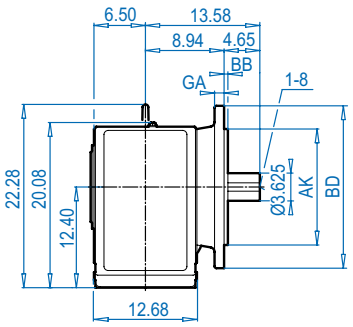


## SK 9072.1AF

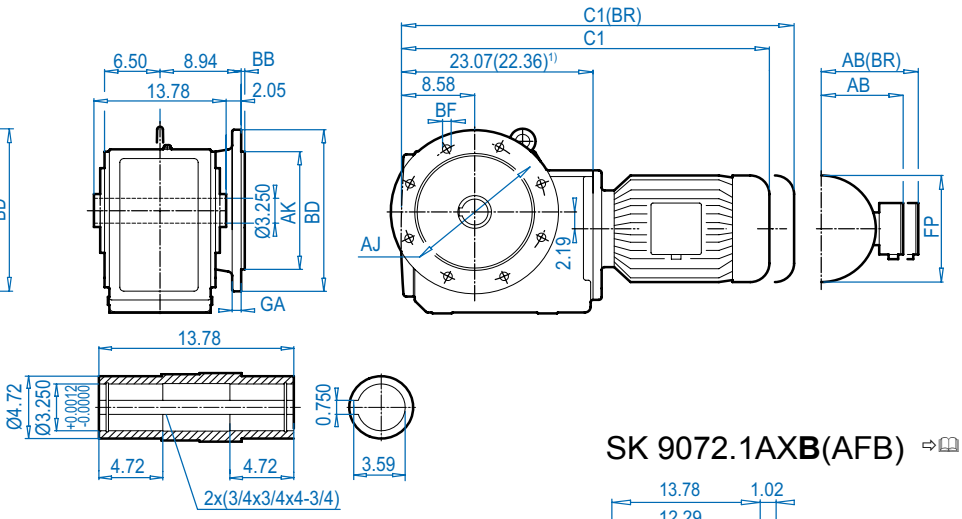


## SK 9072.1AX**B**(AFB) ⇨📖 574

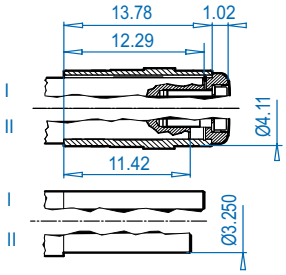


### Mounting flange

| BD (mm) | AJ | AK | BB | BF | GA |
|---|---|---|---|---|---|
| 17.72 (450) | 15.75 | 13.780 $^{+0.0000}_{-0.0014}$ | 0.20 | 0.71 | 0.87 |
| 21.65 (550) | 19.69 | 17.717 $^{+0.0000}_{-0.0014}$ | 0.20 | 0.71 | 1.10 |

### Motor dimensions

| Standard eff. | 100L | | 132S/M | 160M/L[1)] | | 180MX/LX[1)] | | 200L[1)] | 225S/M[1)] | | For Other Connection Possibilities please see ⇨📖 555 & 557 |
|---|---|---|---|---|---|---|---|---|---|---|---|
| Energy eff. | 100LH | 112MH | 132SH/MH | 160MH[1)] | 160LH[1)] | | 180MH/LH[1)] | 200LH[1)] | | 225SH/MH[1)] | |
| AB | 6.65 | 7.05 | 8.03 | 8.90 | 8.90 | 10.20 | 10.20 | 12.05 | 12.05 | 13.19 |  |
| AB (BR) | 6.26 | 6.69 | 7.72 | 8.90 | 8.90 | 10.20 | 10.20 | 12.05 | 12.05 | - | |
| C1 | 35.12 | 35.91 | 40.20 | 41.89 | 41.89 | 46.77 | 46.77 | 49.45 | 49.45 | 50.43 | |
| C1 (BR) | 38.70 | 39.57 | 44.41 | 48.47 | 48.47 | 50.90 | 50.90 | 56.02 | 56.02 | - | |
| C | 34.41 | 35.20 | 39.49 | 41.18 | 41.18 | 46.06 | 46.06 | 48.74 | 48.74 | 49.72 | |
| C (BR) | 37.99 | 38.86 | 43.70 | 47.05 | 47.05 | 50.19 | 50.19 | 55.31 | 55.31 | - | |
| FP | 7.91 | 8.98 | 10.47 | 12.60 | 12.60 | 14.09 | 14.09 | 15.67 | 15.67 | 18.50 | |

**(BR)** denotes Brakemotor

DIMENSIONS
Dimensions in Inches
ALTERNATE SHAFTS SEE PAGES 566 - 573


Send Quote Requests to info@automatedpt.com
Call +1(800)985-6929 To Order or Order Online At Nordgearmotors.com



# SK 9072.1 + Motor

## SK 9072.1AZ

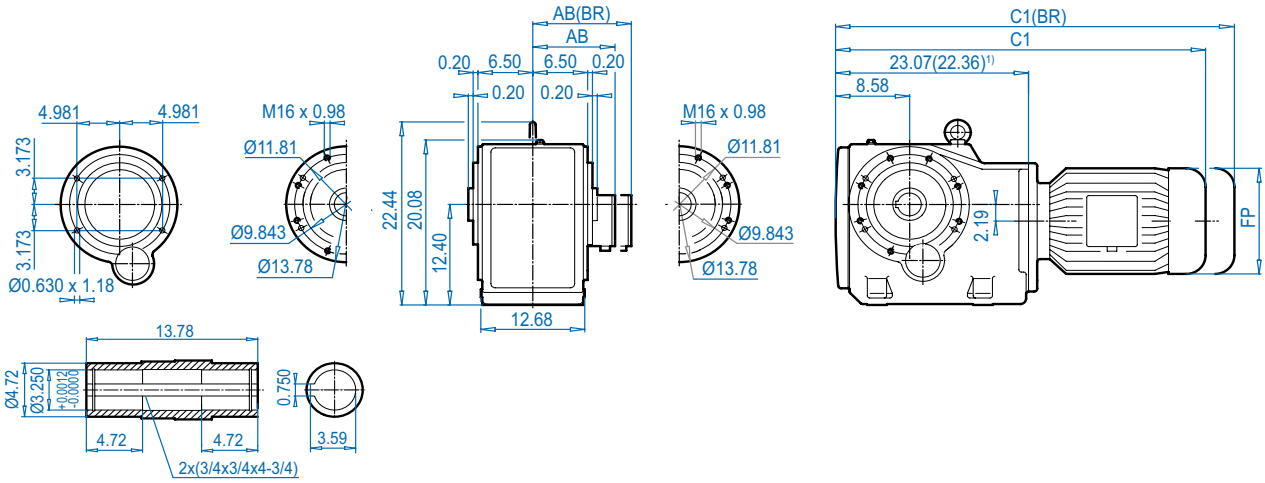


## SK 9072.1AZ**K**

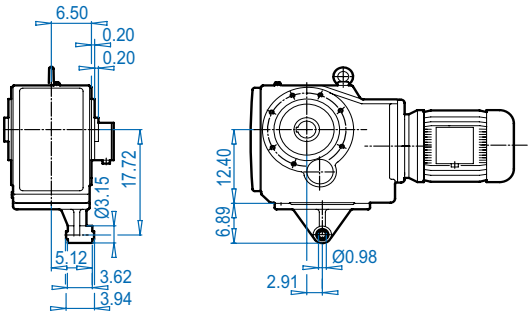


## SK 9072.1AZ**D**

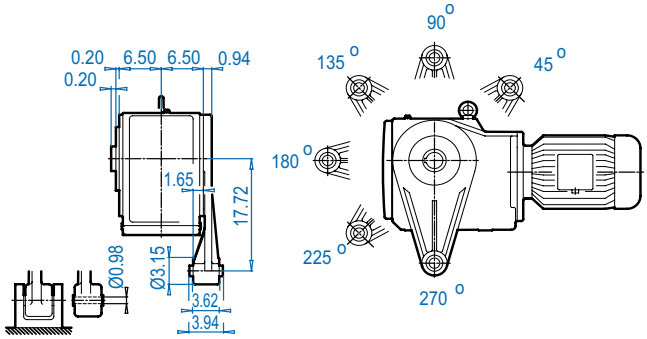


## SK 9072.1AZ**B** ⇨🕮 574

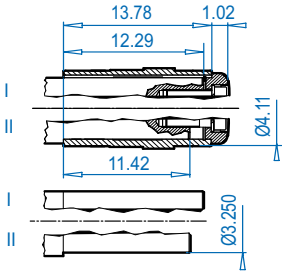


## SK 9072.1AZ**S** ⇨🕮 571

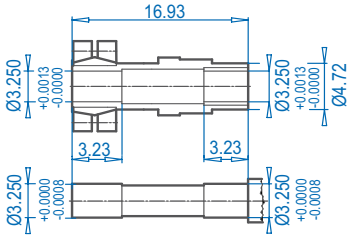


## SK 9072.1AZ**SH**

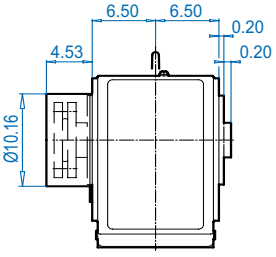


### Motor dimensions

| Standard eff. | 100L | | 132S/M | 160M/L[1] | | 180MX/LX[1] | | 200L[1] | 225S/M[1] | | For Other Connection Possibilities please see ⇨🕮 555 & 557 |
|---|---|---|---|---|---|---|---|---|---|---|---|
| Energy eff. | 100LH | 112MH | 132SH/MH | 160MH[1] | 160LH[1] | | 180MH/LH[1] | 200LH[1] | | 225SH/MH[1] | |
| AB | 6.65 | 7.05 | 8.03 | 8.90 | 8.90 | 10.20 | 10.20 | 12.05 | 12.05 | 13.19 | 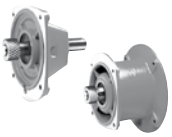 |
| AB (BR) | 6.26 | 6.69 | 7.72 | 8.90 | 8.90 | 10.20 | 10.20 | 12.05 | 12.05 | - | |
| C1 | 35.12 | 35.91 | 40.20 | 41.89 | 41.89 | 46.77 | 46.77 | 49.45 | 49.45 | 50.43 | |
| C1 (BR) | 38.70 | 39.57 | 44.41 | 48.47 | 48.47 | 50.90 | 50.90 | 56.02 | 56.02 | - | |
| FP | 7.91 | 8.98 | 10.47 | 12.60 | 12.60 | 14.09 | 14.09 | 15.67 | 15.67 | 18.50 | |

**(BR)** denotes Brakemotor

Dimensions in Inches DIMENSIONS
ALTERNATE SHAFTS SEE PAGES 566 - 573


Send Quote Requests to info@automatedpt.com
Call +1(800)985-6929 To Order or Order Online At Nordgearmotors.com

# SK 9072.1 + NEMA




## SK 9072.1

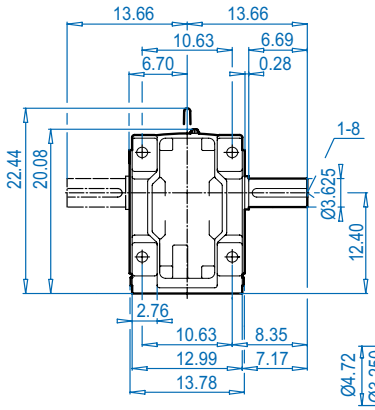


## SK 9072.1AX

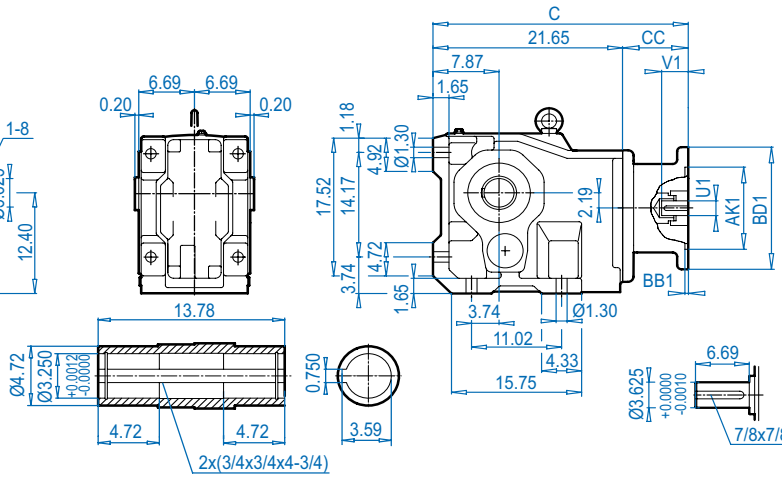


## NEMA Input

## SK 9072.1VF

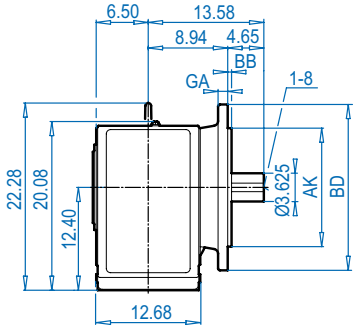


## SK 9072.1AF

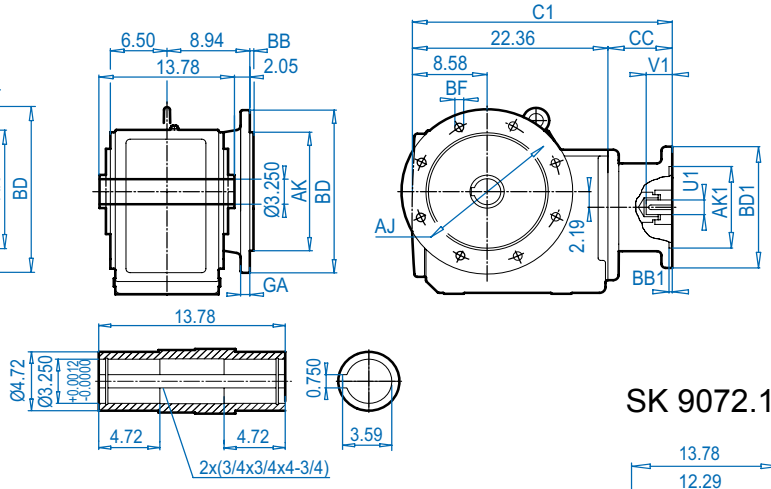


## SK 9072.1AX**B**(AFB) ⇨🕮 574

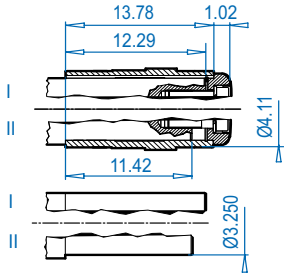


### Mounting flange

| BD (mm) | AJ | AK | BB | BF | GA |
|---|---|---|---|---|---|
| 17.72 (450) | 15.75 | 13.780 $^{+0.0000}_{-0.0014}$ | 0.20 | 0.71 | 0.87 |
| 21.65 (550) | 19.69 | 17.717 $^{+0.0000}_{-0.0014}$ | 0.20 | 0.71 | 1.10 |

### NEMA Dimensions

| Type | AJ1 | AK1 | BB1 | BD1 | BF1 | U1 | V1 | UY1 | Y1 | C | C1 | CC |
|---|---|---|---|---|---|---|---|---|---|---|---|---|
| **180TC** | 7.25 | 8.500 | 0.23 | 9.17 | 0.59 | 1.125 | 2.62 | 1.24 | 0.250 | 29.17 | 28.48 | 7.52 |
| **210TC** | 7.25 | 8.500 | 0.23 | 9.17 | 0.59 | 1.375 | 3.12 | 1.52 | 0.312 | 29.17 | 28.48 | 7.52 |
| **250TC** | 7.25 | 8.500 | 0.23 | 9.17 | 0.59 | 1.625 | 3.75 | 1.80 | 0.375 | 33.03 | 32.36 | 11.38 |
| **280TC** | 9.00 | 10.500 | 0.23 | 13.78 | 0.59 | 1.875 | 4.38 | 2.10 | 0.500 | 33.03 | 32.36 | 11.38 |
| **320TC** | 11.00 | 12.500 | 0.24 | 15.75 | 0.75 | 2.125 | 5.00 | 2.35 | 0.500 | 32.00 | 31.33 | 10.35 |
| **360TC** | 11.00 | 12.500 | 0.24 | 17.71 | 0.75 | 2.375 | 5.62 | 2.65 | 0.625 | 34.92 | 34.25 | 13.27 |

DIMENSIONS
Dimensions in Inches
ALTERNATE SHAFTS SEE PAGES 566 - 573


Send Quote Requests to info@automatedpt.com
Call +1(800)985-6929 To Order or Order Online At Nordgearmotors.com




# SK 9072.1 + NEMA

## SK 9072.1AZ

**NEMA Input**

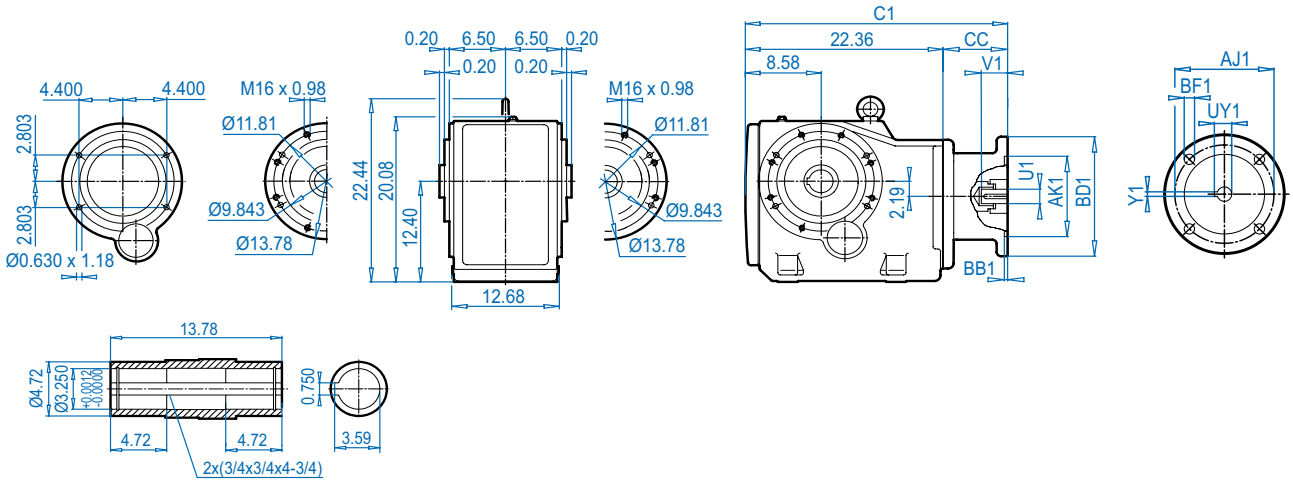


## SK 9072.1AZ**K**

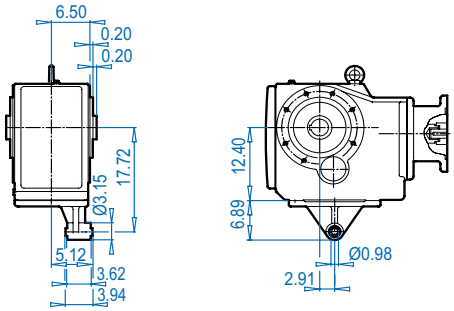


## SK 9072.1AZ**D**

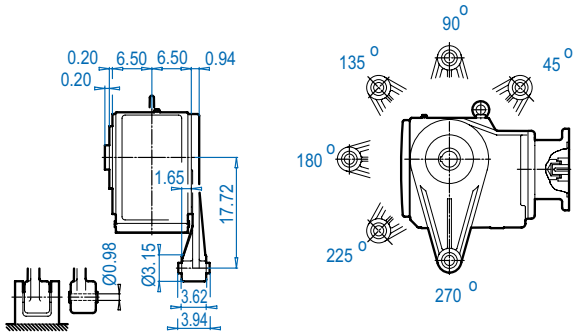


## SK 9072.1AZ**B** ⇨🕮 574

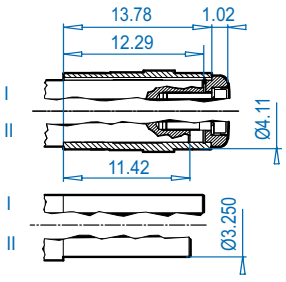


## SK 9072.1AZ**S** ⇨🕮 571

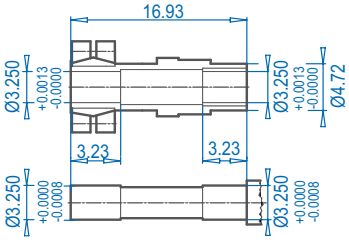


## SK 9072.1AZ**SH**

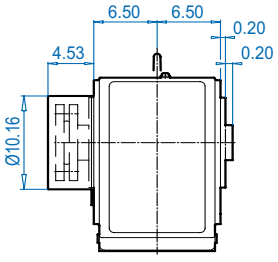


**NEMA Dimensions**

| Type | AJ1 | AK1 | BB1 | BD1 | BF1 | U1 | V1 | UY1 | Y1 | C1 | CC |
|---|---|---|---|---|---|---|---|---|---|---|---|
| **180TC** | 7.25 | 8.500 | 0.23 | 9.17 | 0.59 | 1.125 | 2.62 | 1.24 | 0.250 | 29.86 | 7.50 |
| **210TC** | 7.25 | 8.500 | 0.23 | 9.17 | 0.59 | 1.375 | 3.12 | 1.52 | 0.312 | 29.86 | 7.50 |
| **250TC** | 7.25 | 8.500 | 0.23 | 9.17 | 0.59 | 1.625 | 3.75 | 1.80 | 0.375 | 32.36 | 11.38 |
| **280TC** | 9.00 | 10.500 | 0.23 | 13.78 | 0.59 | 1.875 | 4.38 | 2.10 | 0.500 | 32.36 | 11.38 |
| **320TC** | 11.00 | 12.500 | 0.24 | 15.75 | 0.75 | 2.125 | 5.00 | 2.35 | 0.500 | 31.33 | 10.35 |
| **360TC** | 11.00 | 12.500 | 0.24 | 17.71 | 0.75 | 2.375 | 5.62 | 2.65 | 0.625 | 34.25 | 13.27 |




Send Quote Requests to info@automatedpt.com
Call +1(800)985-6929 To Order or Order Online At Nordgearmotors.com

# SK 9082.1 + Motor




DRIVESYSTEMS

## SK 9082.1

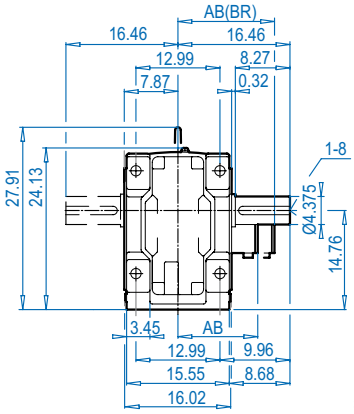


## SK 9082.1AX

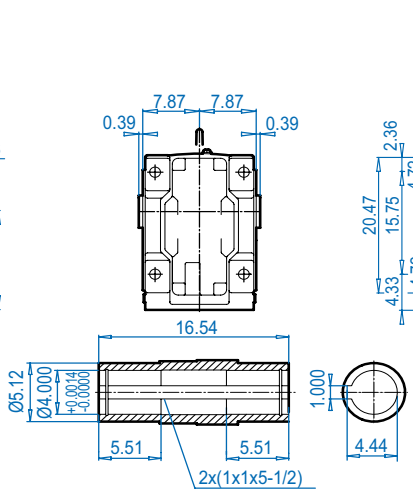


## SK 9082.1VF

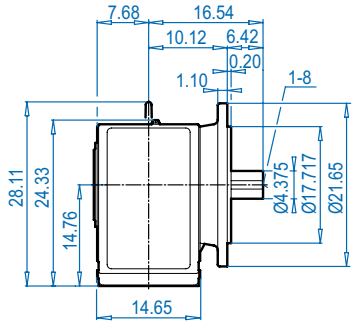


## SK 9082.1AF

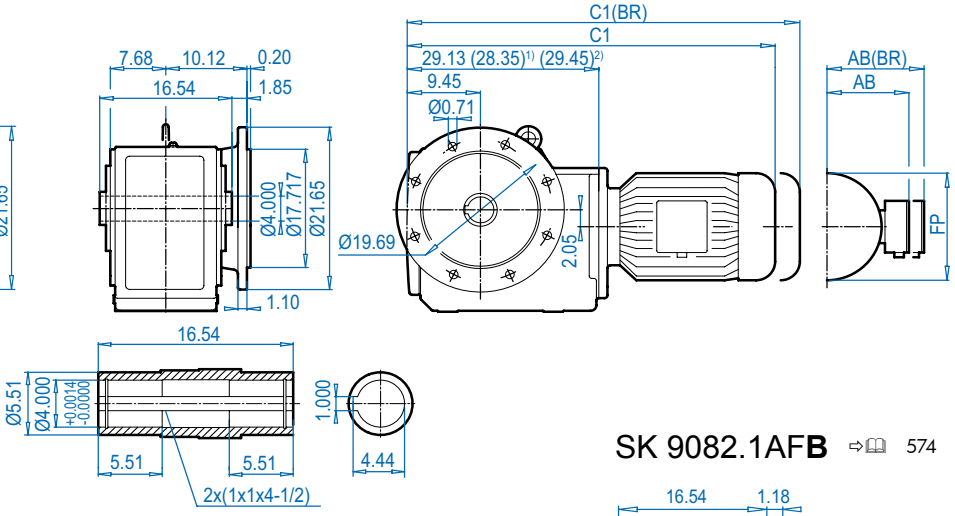


## SK 9082.1AX**B** ⇨🕮 574

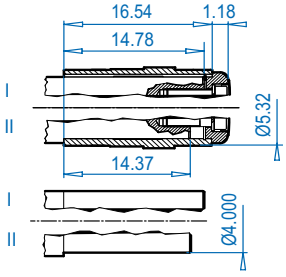


## SK 9082.1AF**B** ⇨🕮 574

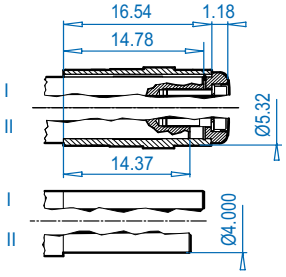


### Motor dimensions

| Standard eff. | 132S/M | 160M/L | | 180MX/LX | | 200L | 225S/M | | 250M[1)] | 280S[1)] | 280M[2)] | For Other Connection Possibilities please see ⇨🕮 555 & 557 |
|---|---|---|---|---|---|---|---|---|---|---|---|---|
| Energy eff. | 132SH/MH | 160MH | 160LH | | 180MH/LH | 200LH | | 225SH/MH | 250MH[1)] | 280SH[1)] | 280MH[2)] | |
| **AB** | 8.03 | 8.90 | 9.53 | 10.20 | 10.20 | 12.05 | 12.05 | 13.19 | 15.43 | 17.01 | 17.01 |  |
| **AB (BR)** | 7.72 | 8.90 | 9.53 | 10.20 | 10.20 | 12.05 | 12.05 | - | 15.43 | 17.01 | 17.01 | |
| **C1** | 46.26 | 47.95 | 48.50 | 52.83 | 52.83 | 56.22 | 56.22 | 56.49 | 58.27 | 61.02 | 61.73 | |
| **C1 (BR)** | 50.47 | 54.53 | 55.55 | 56.97 | 56.97 | 62.80 | 62.80 | - | 68.11 | 68.11 | 73.15 | |
| **C** | 45.67 | 47.36 | 47.91 | 52.24 | 52.24 | 55.63 | 55.63 | 55.90 | 57.68 | 60.43 | 61.14 | |
| **C (BR)** | 49.88 | 53.94 | 54.96 | 56.38 | 56.38 | 62.20 | 62.20 | - | 67.52 | 67.52 | 72.56 | |
| **FP** | 10.47 | 12.60 | 12.60 | 12.60 | 14.09 | 15.67 | 15.67 | 18.50 | 19.49 | 21.85 | 21.85 | |

**(BR)** denotes Brakemotor




Send Quote Requests to info@automatedpt.com
Call +1(800)985-6929 To Order or Order Online At Nordgearmotors.com

DRIVESYSTEMS



# SK 9082.1 + Motor

## SK 9082.1AZ

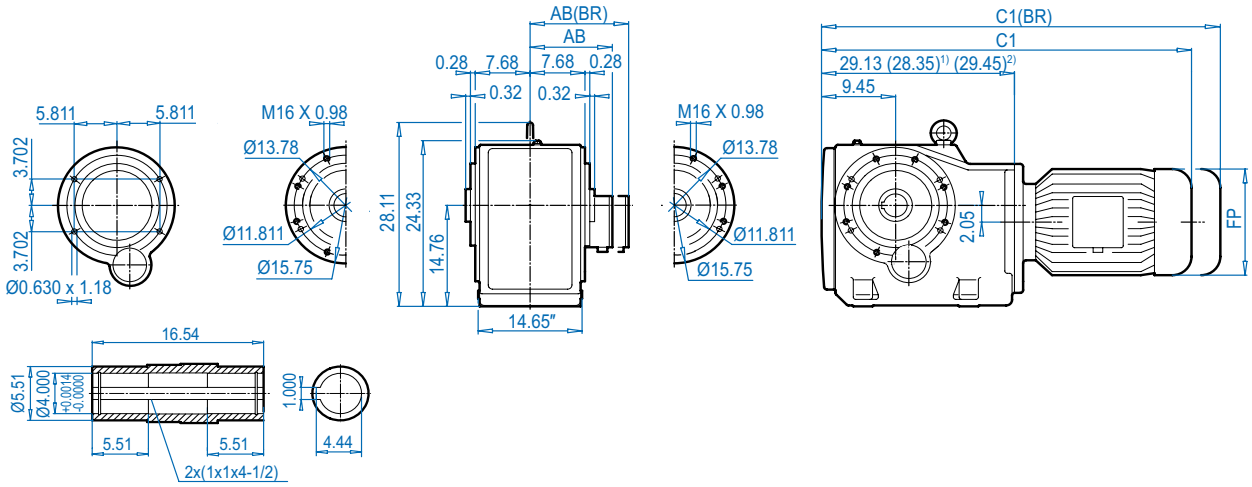


## SK 9082.1AZ**K**

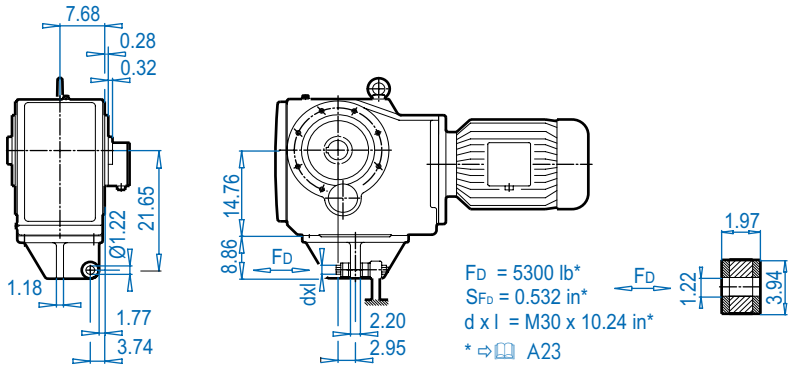


## SK 9082.1AZ**B** ⇨ 574

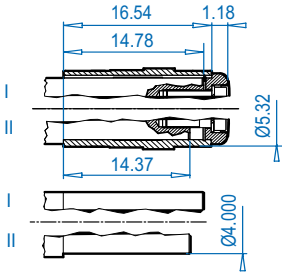


## SK 9082.1AZ**S** ⇨ 571

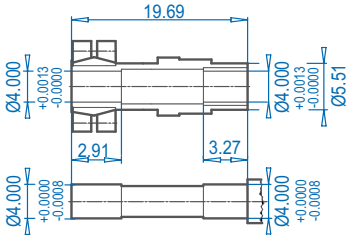


## SK 9082.1AZ**SH**

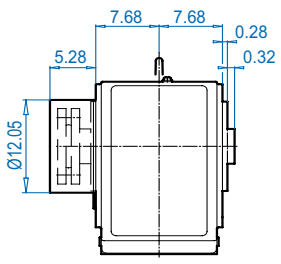


### Motor dimensions

| Standard eff. | 132S/M | 160M/L | | 180MX/LX | | 200L | 225S/M | | 250M1) | 280S1) | 280M2) | For Other Connection Possibilities please see ⇨ 555 & 557 |
|---|---|---|---|---|---|---|---|---|---|---|---|---|
| Energy eff. | 132SH/MH | 160MH | 160LH | | 180MH/LH | 200LH | | 225SH/MH | 250MH1) | 280SH1) | 280MH2) | |
| AB | 8.03 | 8.90 | 8.90 | 10.20 | 10.20 | 12.05 | 12.05 | 13.19 | 15.43 | 17.01 | 17.01 |  |
| AB (BR) | 7.72 | 8.90 | 8.90 | 10.20 | 10.20 | 12.05 | 12.05 | - | 15.43 | 17.01 | 17.01 | |
| C1 | 46.26 | 47.95 | 47.95 | 52.83 | 52.83 | 56.22 | 56.22 | 56.49 | 58.27 | 61.02 | 61.73 | |
| C1 (BR) | 50.47 | 54.53 | 54.53 | 56.97 | 56.97 | 62.80 | 62.80 | - | 68.11 | 68.11 | 73.15 | |
| FP | 10.47 | 12.60 | 12.60 | 12.60 | 14.09 | 15.67 | 15.67 | 18.50 | 19.49 | 21.85 | 21.85 | |

**(BR)** denotes Brakemotor

Dimensions in Inches
DIMENSIONS
ALTERNATE SHAFTS SEE PAGES 566 - 573


Send Quote Requests to info@automatedpt.com
Call +1(800)985-6929 To Order or Order Online At Nordgearmotors.com

# SK 9082.1 + NEMA





DRIVESYSTEMS

## SK 9082.1

## SK 9082.1AX

## NEMA Input

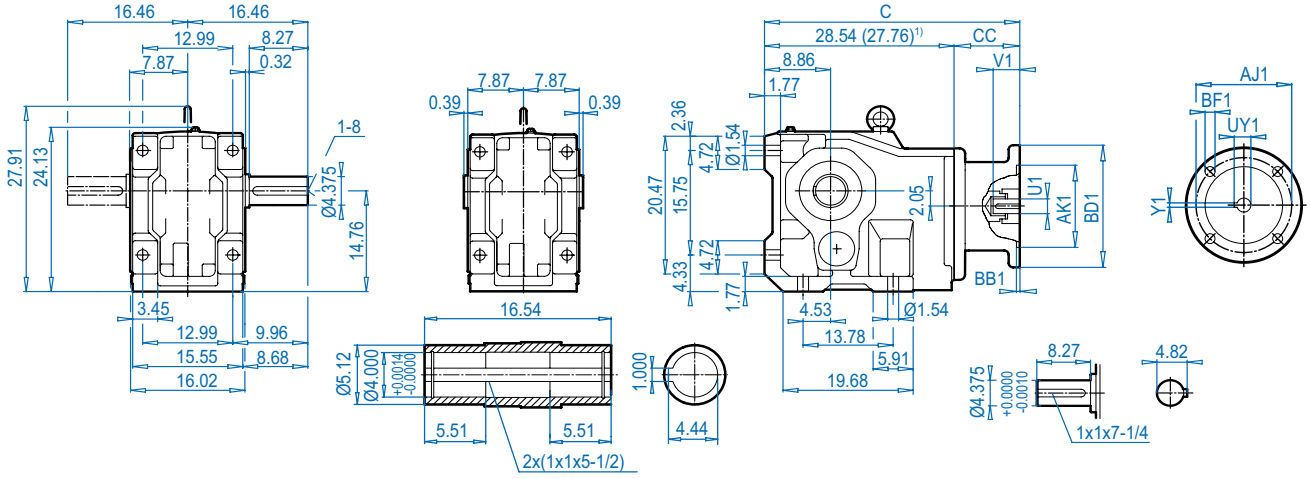


## SK 9082.1VF

## SK 9082.1AF

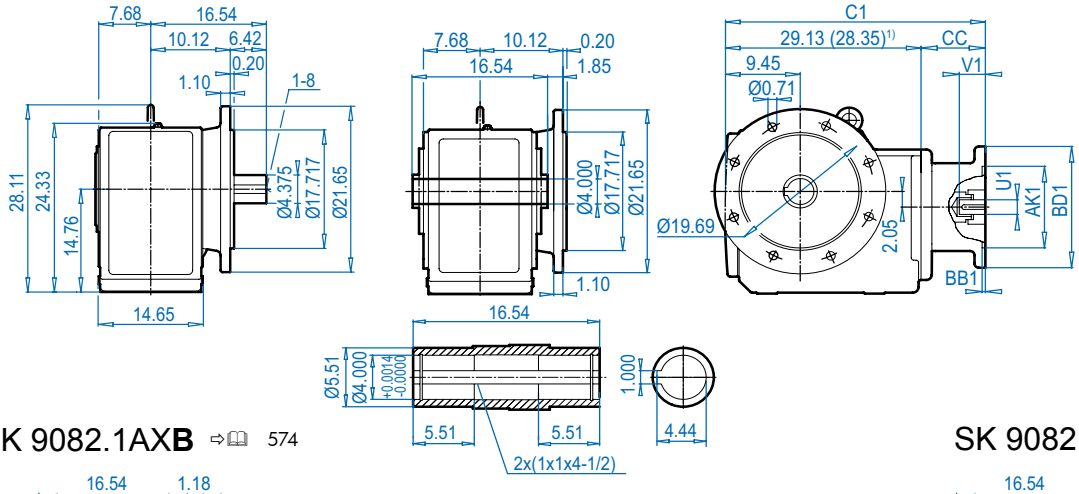


## SK 9082.1AXB ⇨🕮 574

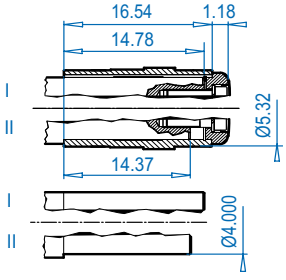


## SK 9082.1AFB ⇨🕮 574

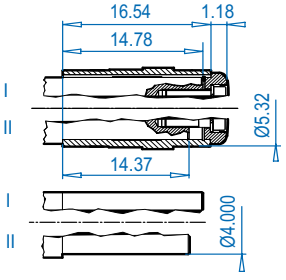


### NEMA Dimensions

| Type | AJ1 | AK1 | BB1 | BD1 | BF1 | U1 | V1 | UY1 | Y1 | C | C1 | CC |
|---|---|---|---|---|---|---|---|---|---|---|---|---|
| **180TC** | 7.25 | 8.500 | 0.23 | 9.17 | 0.59 | 1.125 | 2.62 | 1.24 | 0.250 | 36.06 | 36.65 | 7.52 |
| **210TC** | 7.25 | 8.500 | 0.23 | 9.17 | 0.59 | 1.375 | 3.12 | 1.52 | 0.312 | 36.06 | 36.65 | 7.52 |
| **250TC** | 7.25 | 8.500 | 0.23 | 9.17 | 0.59 | 1.625 | 3.75 | 1.80 | 0.375 | 39.92 | 40.51 | 11.38 |
| **280TC** | 9.00 | 10.500 | 0.23 | 13.78 | 0.59 | 1.875 | 4.38 | 2.10 | 0.500 | 39.92 | 40.51 | 11.38 |
| **320TC** | 11.00 | 12.500 | 0.24 | 15.75 | 0.75 | 2.125 | 5.00 | 2.35 | 0.500 | 38.89 | 39.48 | 10.35 |
| **360TC1)** | 11.00 | 12.500 | 0.24 | 21.65 | 0.75 | 2.375 | 5.62 | 2.65 | 0.625 | 41.05 | 41.64 | 13.29 |




Send Quote Requests to info@automatedpt.com
Call +1(800)985-6929 To Order or Order Online At Nordgearmotors.com

DRIVESYSTEMS





# SK 9082.1 + NEMA

## SK 9082.1AZ

**NEMA Input**

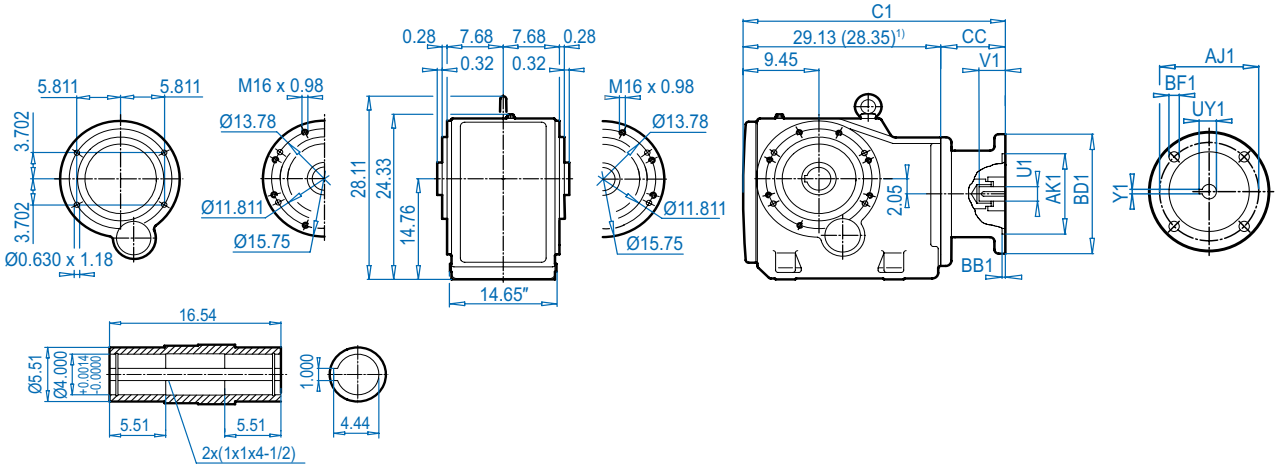


Dimensions in inches
DIMENSIONS

## SK 9082.1AZ**K**

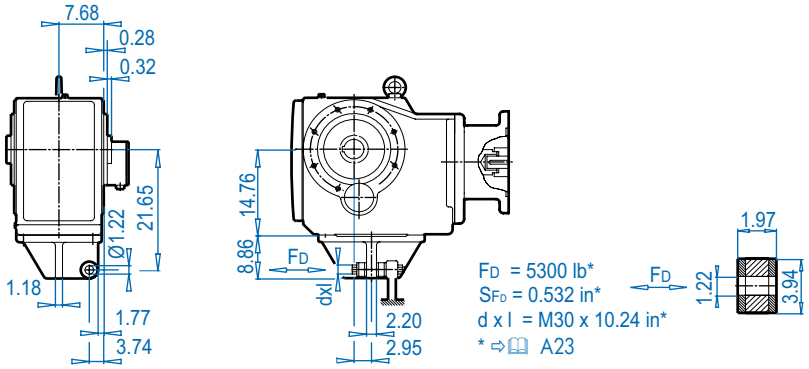


## SK 9082.1AZ**B** ⇨ 574

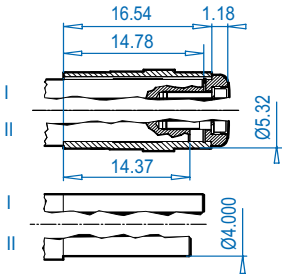


## SK 9082.1AZ**S** ⇨ 571

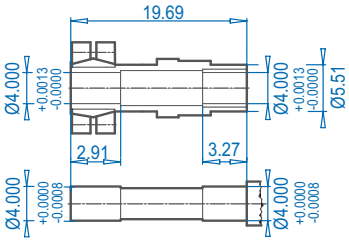


## SK 9082.1AZ**SH**

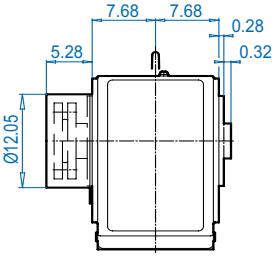


### NEMA Dimensions

| Type | AJ1 | AK1 | BB1 | BD1 | BF1 | U1 | V1 | UY1 | Y1 | C1 | CC |
|---|---|---|---|---|---|---|---|---|---|---|---|
| **180TC** | 7.25 | 8.500 | 0.23 | 9.17 | 0.59 | 1.125 | 2.62 | 1.24 | 0.250 | 36.65 | 7.52 |
| **210TC** | 7.25 | 8.500 | 0.23 | 9.17 | 0.59 | 1.375 | 3.12 | 1.52 | 0.312 | 36.65 | 7.52 |
| **250TC** | 7.25 | 8.500 | 0.23 | 9.17 | 0.59 | 1.625 | 3.75 | 1.80 | 0.375 | 40.51 | 11.38 |
| **280TC** | 9.00 | 10.500 | 0.23 | 13.78 | 0.59 | 1.875 | 4.38 | 2.10 | 0.500 | 40.51 | 11.38 |
| **320TC** | 11.00 | 12.500 | 0.24 | 15.75 | 0.75 | 2.125 | 5.00 | 2.35 | 0.500 | 39.48 | 10.35 |
| **360TC**1) | 11.00 | 12.500 | 0.24 | 21.65 | 0.75 | 2.375 | 5.62 | 2.65 | 0.625 | 41.64 | 13.29 |

ALTERNATE SHAFTS SEE PAGES 566 - 573


Send Quote Requests to info@automatedpt.com
Call +1(800)985-6929 To Order or Order Online At Nordgearmotors.com

# SK 9086.1 + Motor






## SK 9086.1

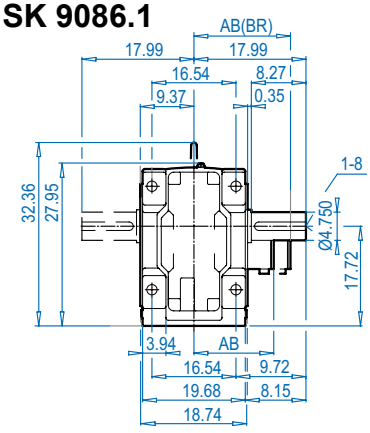


## SK 9086.1AX

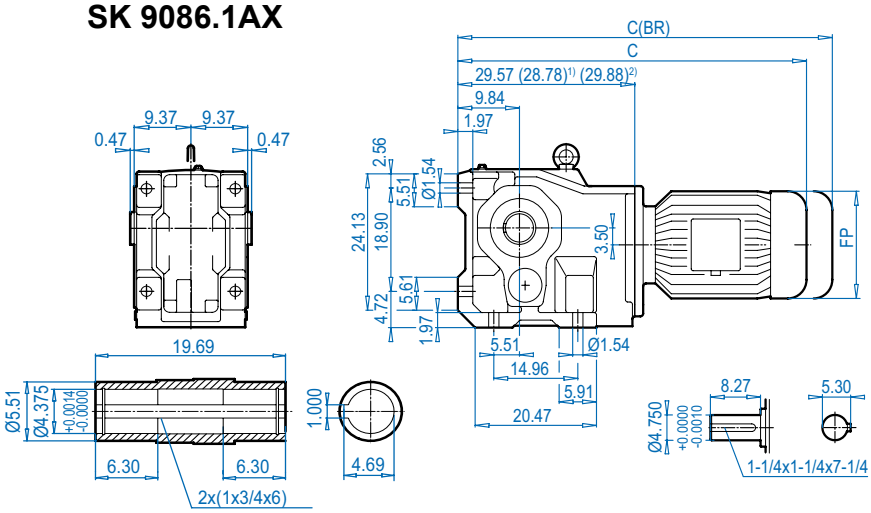


## SK 9086.1VF

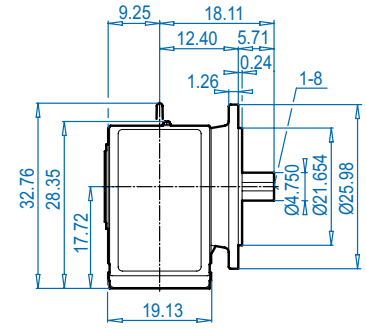


## SK 9086.1AF

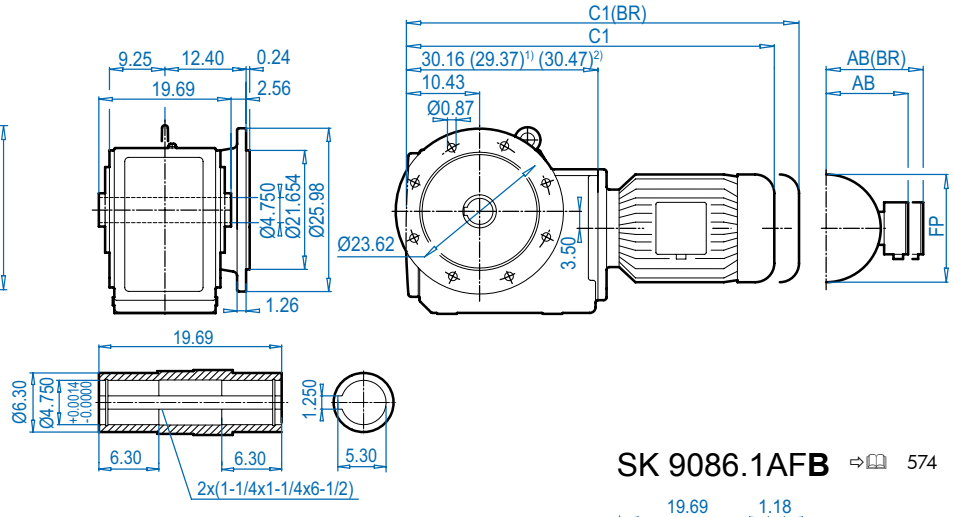


## SK 9086.1AXB ⇨🕮 574

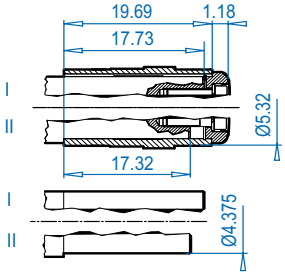


## SK 9086.1AFB ⇨🕮 574

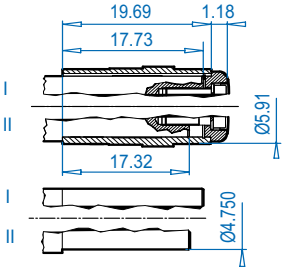


**Motor dimensions**.

| Standard eff. | 132S/M | 160M/L | | 180MX/LX | | 200L | 225S/M | | 250M[1)] | 280S[1)] | 280M[2)] | 315S[2)] | 315Ma[2)] | For Other Connection Possibilities please see ⇨🕮 555 & 557 |
|---|---|---|---|---|---|---|---|---|---|---|---|---|---|---|
| Energy eff. | 132SH/MH | 160MH | 160LH | | 180MH/LH | 200LH | | 225SH/MH | 250MH[1)] | 280SH[1)] | 280MH[2)] | 315SH[2)] | 315MHa[2)] | |
| AB | 8.03 | 8.90 | 8.90 | 10.20 | 10.20 | 12.05 | 12.05 | 13.19 | 15.43 | 17.01 | 17.01 | 19.69 | 19.69 |  |
| AB (BR) | 7.72 | 8.90 | 8.90 | 10.20 | 10.20 | 12.05 | 12.05 | - | 15.43 | 17.01 | 17.01 | - | - | |
| C1 | 47.28 | 48.98 | 48.98 | 53.86 | 53.86 | 57.20 | 57.20 | 57.52 | 59.29 | 62.05 | 62.76 | 67.17 | 73.46 | |
| C1 (BR) | 51.50 | 56.56 | 56.56 | 57.99 | 57.99 | 63.78 | 63.78 | - | 69.13 | 69.13 | 74.17 | - | - | |
| C | 46.69 | 48.39 | 48.39 | 53.27 | 53.27 | 56.66 | 56.66 | 56.93 | 55.95 | 61.46 | 62.17 | 66.58 | 72.87 | |
| C (BR) | 50.91 | 54.97 | 54.97 | 57.40 | 57.40 | 63.23 | 63.23 | - | 68.54 | 68.54 | 73.58 | - | - | |
| FP | 10.47 | 12.60 | 12.60 | 14.09 | 14.09 | 15.67 | 15.67 | 18.50 | 19.49 | 21.85 | 21.85 | 24.02 | 24.02 | |

**(BR)** denotes Brakemotor


Send Quote Requests to info@automatedpt.com
Call +1(800)985-6929 To Order or Order Online At Nordgearmotors.com

DRIVESYSTEMS



# SK 9086.1 + Motor

## SK 9086.1AZ

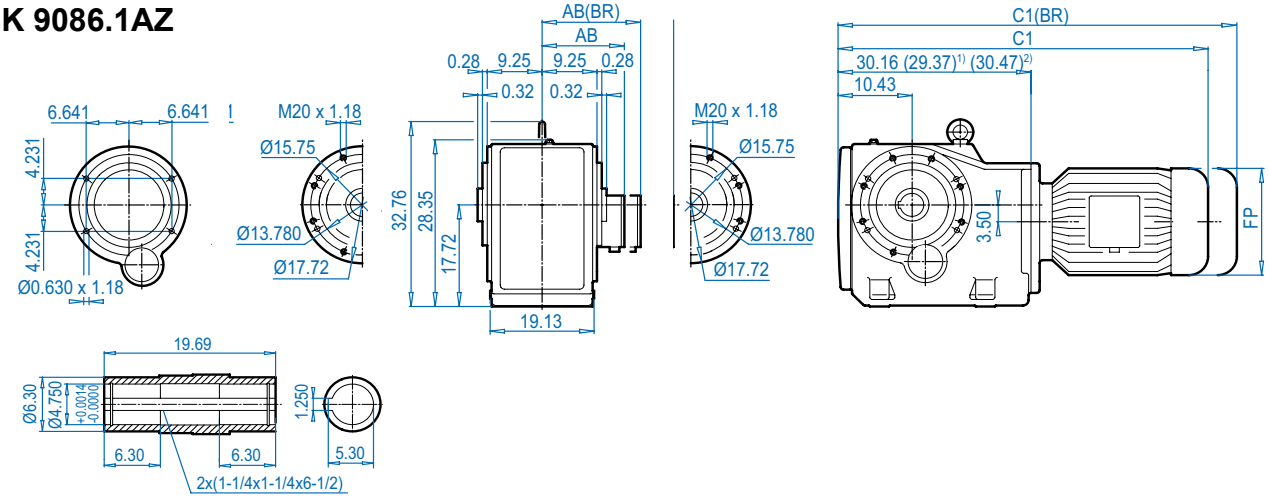


## SK 9086.1AZ**K**

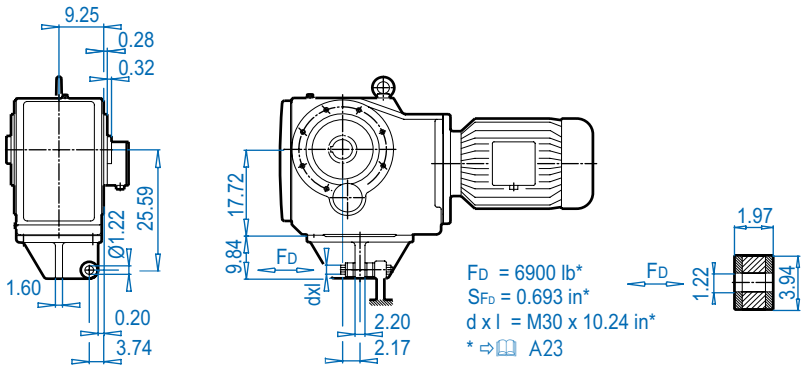


## SK 9086.1AZ**B** ⇨ 574

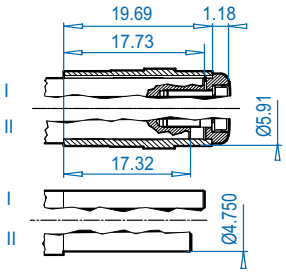


## SK 9086.1AZ**S** ⇨ 571

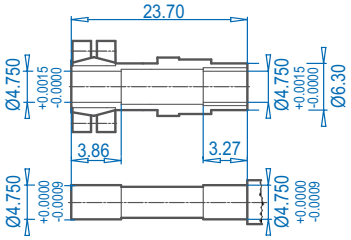


## SK 9086.1AZ**SH**

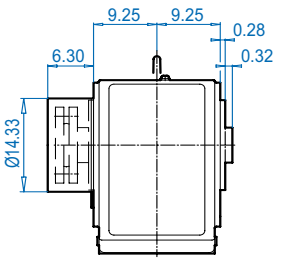


**Motor dimensions**.

| Standard eff. | 132S/M | 160M/L | | 180MX/LX | | 200L | 225S/M | | 250M1) | 280S1) | 280M2) | 315S2) | 315Ma2) | For Other Connection Possibilities please see ⇨ 555 & 557 |
|---|---|---|---|---|---|---|---|---|---|---|---|---|---|---|
| Energy eff. | 132SH/MH | 160MH | 160LH | | 180MH/LH | 200LH | | 225SH/MH | 250MH1) | 280SH1) | 280MH2) | 315SH2) | 315MHa2) | |
| AB | 8.03 | 8.90 | 8.90 | 10.20 | 10.20 | 12.05 | 12.05 | 13.19 | 15.43 | 17.01 | 17.01 | 19.69 | 19.69 | 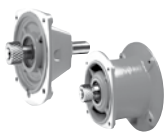 |
| AB (BR) | 7.72 | 8.90 | 8.90 | 10.20 | 10.20 | 12.05 | 12.05 | - | 15.43 | 17.01 | 17.01 | - | - | |
| C1 | 47.28 | 48.98 | 48.98 | 53.86 | 53.86 | 57.20 | 57.20 | 57.52 | 59.29 | 62.05 | 62.76 | 67.17 | 73.46 | |
| C1 (BR) | 51.50 | 56.56 | 56.56 | 57.99 | 57.99 | 63.78 | 63.78 | - | 69.13 | 69.13 | 74.17 | - | - | |
| FP | 10.47 | 12.60 | 12.60 | 14.09 | 14.09 | 15.67 | 15.67 | 18.50 | 19.49 | 21.85 | 21.85 | 24.02 | 24.02 | |

**(BR)** denotes Brakemotor

Dimensions in Inches
DIMENSIONS
ALTERNATE SHAFTS SEE PAGES 566 - 573


Send Quote Requests to info@automatedpt.com
Call +1(800)985-6929 To Order or Order Online At Nordgearmotors.com

# SK 9086.1 + NEMA




DRIVESYSTEMS

## SK 9086.1

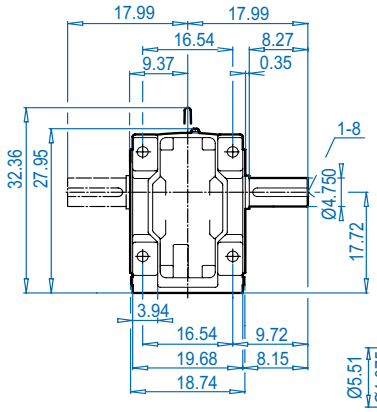


## SK 9086.1AX

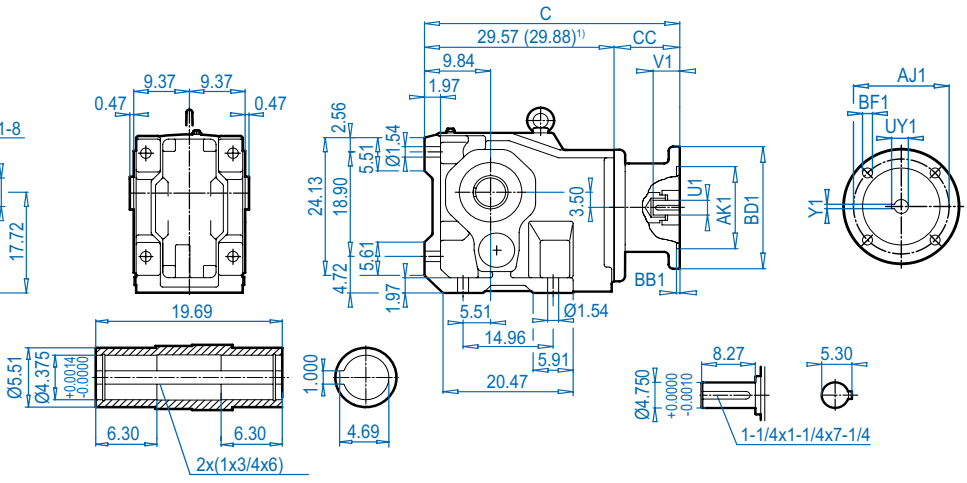


DIMENSIONS — Dimensions in Inches

## SK 9086.1VF

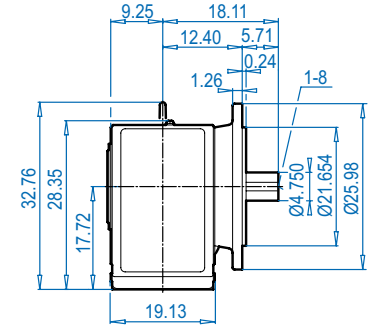


## SK 9086.1AF

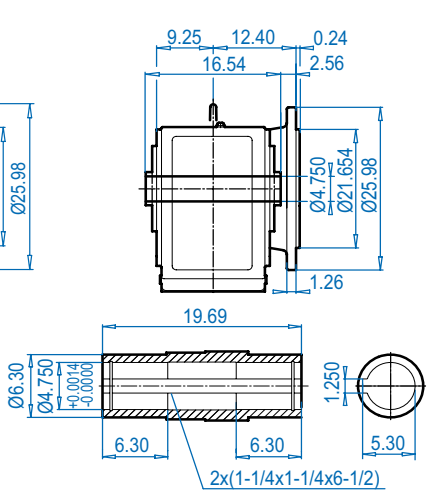


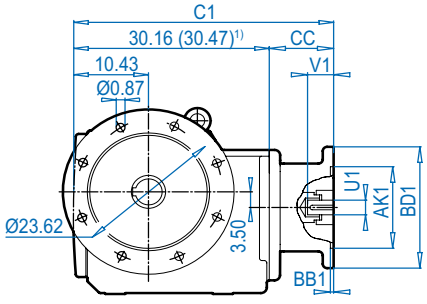


## SK 9086.1AXB ⇨🕮 574

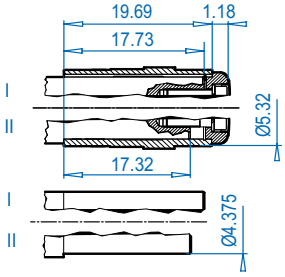


## SK 9086.1AFB ⇨🕮 574

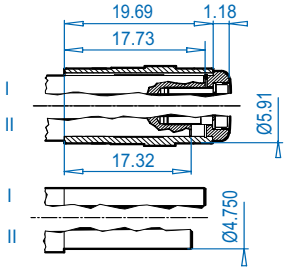


ALTERNATE SHAFTS SEE PAGES 566 - 573

### NEMA Dimensions

| Type | AJ1 | AK1 | BB1 | BD1 | BF1 | U1 | V1 | UY1 | Y1 | C | C1 | CC |
|---|---|---|---|---|---|---|---|---|---|---|---|---|
| **180TC** | 7.25 | 8.500 | 0.23 | 9.17 | 0.59 | 1.125 | 2.62 | 1.24 | 0.250 | 37.07 | 37.68 | 7.52 |
| **210TC** | 7.25 | 8.500 | 0.23 | 9.17 | 0.59 | 1.375 | 3.12 | 1.52 | 0.312 | 37.07 | 37.68 | 7.52 |
| **250TC** | 7.25 | 8.500 | 0.23 | 9.17 | 0.59 | 1.625 | 3.75 | 1.80 | 0.375 | 40.95 | 41.54 | 11.38 |
| **280TC** | 9.00 | 10.500 | 0.23 | 13.78 | 0.59 | 1.875 | 4.38 | 2.10 | 0.500 | 40.95 | 41.54 | 11.38 |
| **320TC** | 11.00 | 12.500 | 0.24 | 15.75 | 0.75 | 2.125 | 5.00 | 2.35 | 0.500 | 39.92 | 40.51 | 10.35 |
| **360TC1)** | 11.00 | 12.500 | 0.24 | 21.65 | 0.75 | 2.375 | 5.62 | 2.65 | 0.625 | 43.17 | 43.76 | 13.29 |


Send Quote Requests to info@automatedpt.com
Call +1(800)985-6929 To Order or Order Online At Nordgearmotors.com

DRIVESYSTEMS

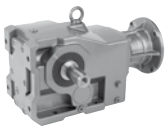



# SK 9086.1 + NEMA

## SK 9086.1AZ

**NEMA Input**

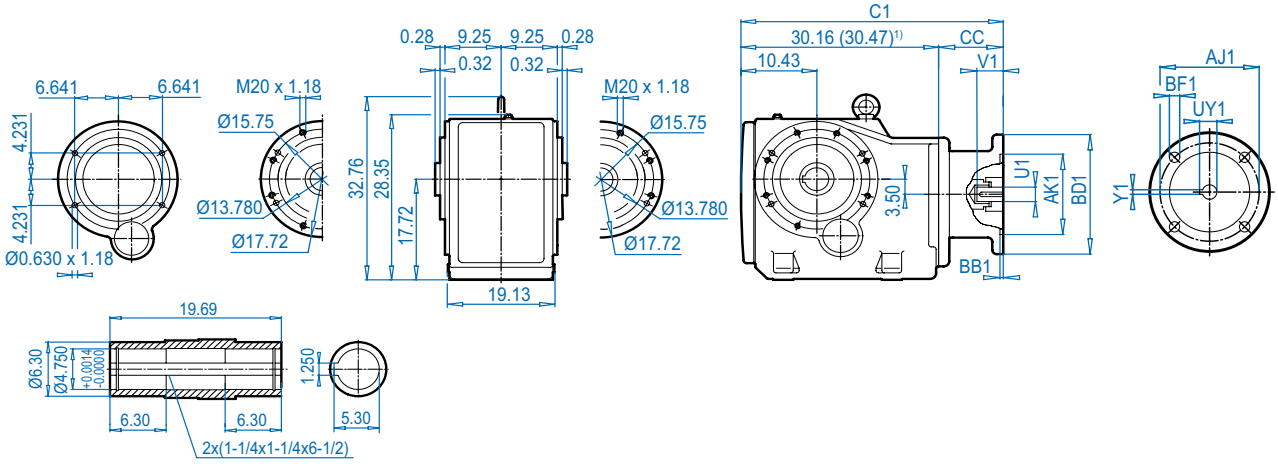


Dimensions in inches
DIMENSIONS

## SK 9086.1AZ**K**

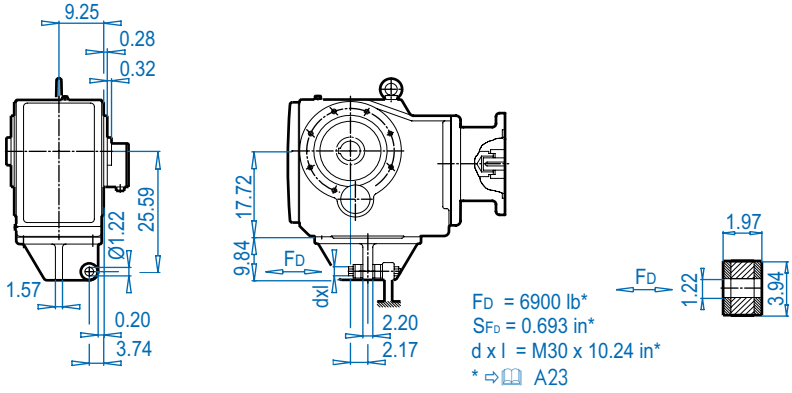


FD = 6900 lb*
SFD = 0.693 in*
d x l = M30 x 10.24 in*
* ⇨🕮 A23

## SK 9086.1AZ**B** ⇨🕮 574

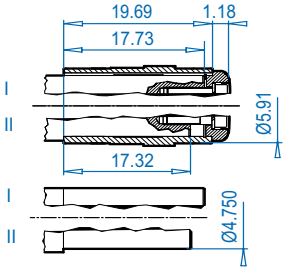


## SK 9086.1AZ**S** ⇨🕮 571

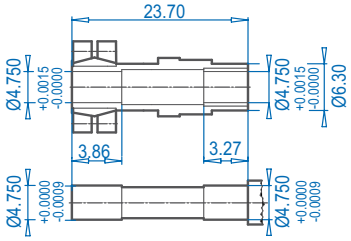


## SK 9086.1AZ**SH**

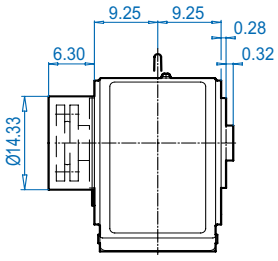


ALTERNATE SHAFTS SEE PAGES 566 - 573

**NEMA Dimensions**

| Type | AJ1 | AK1 | BB1 | BD1 | BF1 | U1 | V1 | UY1 | Y1 | C1 | CC |
|---|---|---|---|---|---|---|---|---|---|---|---|
| **180TC** | 7.25 | 8.500 | 0.23 | 9.17 | 0.59 | 1.125 | 2.62 | 1.24 | 0.250 | 37.68 | 7.52 |
| **210TC** | 7.25 | 8.500 | 0.23 | 9.17 | 0.59 | 1.375 | 3.12 | 1.52 | 0.312 | 37.68 | 7.52 |
| **250TC** | 7.25 | 8.500 | 0.23 | 9.17 | 0.59 | 1.625 | 3.75 | 1.80 | 0.375 | 41.54 | 11.38 |
| **280TC** | 9.00 | 10.500 | 0.23 | 13.78 | 0.59 | 1.875 | 4.38 | 2.10 | 0.500 | 41.54 | 11.38 |
| **320TC** | 11.00 | 12.500 | 0.24 | 15.75 | 0.75 | 2.125 | 5.00 | 2.35 | 0.500 | 40.51 | 10.35 |
| **360TC1)** | 11.00 | 12.500 | 0.24 | 21.65 | 0.75 | 2.375 | 5.62 | 2.65 | 0.625 | 43.76 | 13.29 |


Send Quote Requests to info@automatedpt.com
Call +1(800)985-6929 To Order or Order Online At Nordgearmotors.com

# SK 9092.1 + Motor




## SK 9092.1

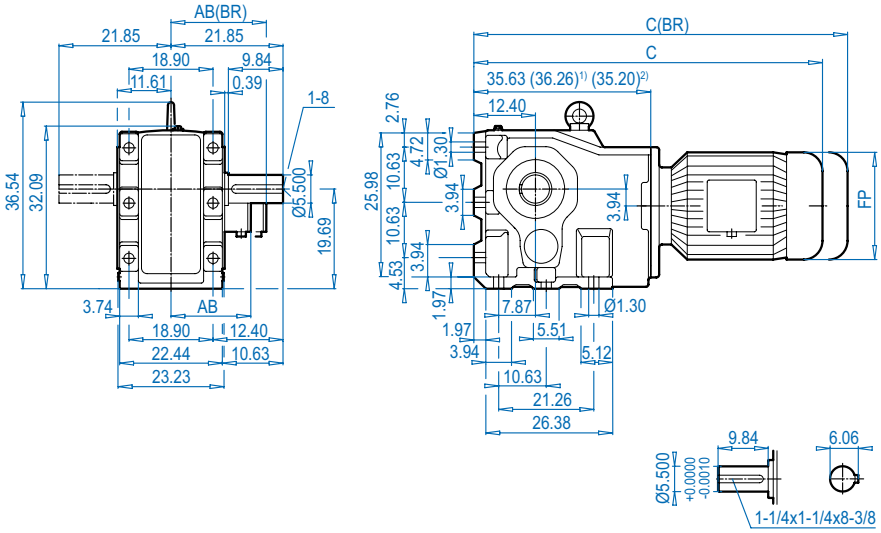


DIMENSIONS
Dimensions in Inches

## SK 9092.1VF

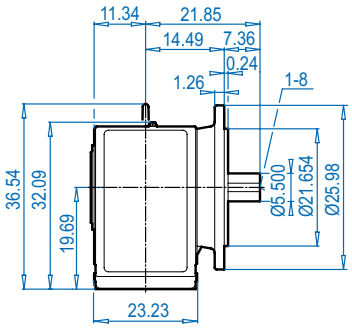


## SK 9092.1AFS

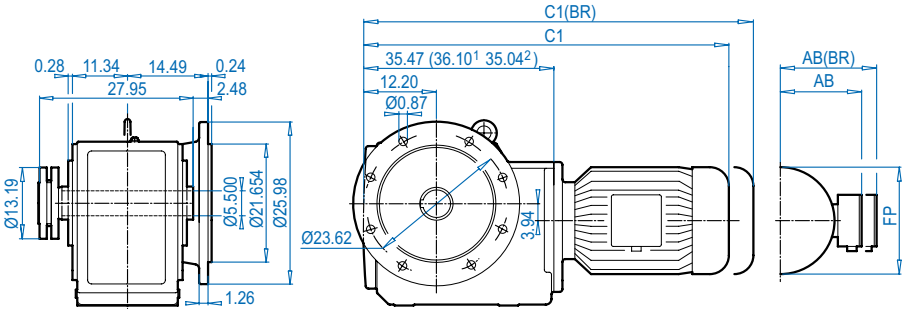


ALTERNATE SHAFTS SEE PAGES 566 - 573

**Motor dimensions**.

| Standard eff. | 160M/L | | 180MX/LX | | 200L | 225S/M | | 250M1) | 280S2) | 280M2) | 315S2) | 315Ma2) | For Other Connection Possibilities please see ⇨ 555 & 557 |
|---|---|---|---|---|---|---|---|---|---|---|---|---|---|
| Energy eff. | 160MH | 160LH | | 180MH/LH | 200LH | | 225SH/MH | 250MH1) | 280SH2) | 280MH2) | 315SH2) | 315MHa2) | |
| AB | 8.90 | 8.90 | 10.20 | 10.20 | 12.05 | 12.05 | 13.19 | 15.43 | 17.01 | 17.01 | 19.69 | 19.69 |  |
| AB (BR) | 8.90 | 8.90 | 10.20 | 10.20 | 12.05 | 12.05 | - | 15.43 | 17.01 | 17.01 | - | - | |
| C1 | 54.29 | 54.29 | 59.17 | 59.17 | 62.52 | 62.52 | 62.83 | 66.02 | 68.78 | 67.32 | 71.73 | 78.03 | |
| C1 (BR) | 60.87 | 60.87 | 63.30 | 63.30 | 69.10 | 69.10 | - | 75.87 | 75.87 | 78.74 | - | - | |
| C | 54.45 | 54.45 | 59.33 | 59.33 | 62.68 | 62.68 | 62.99 | 66.18 | 68.94 | 67.48 | 71.89 | 78.19 | |
| C (BR) | 61.03 | 61.03 | 63.46 | 63.46 | 69.25 | 69.25 | - | 76.02 | 76.02 | 78.90 | - | - | |
| FP | 12.60 | 12.60 | 12.60 | 14.09 | 15.67 | 15.67 | 18.50 | 19.49 | 21.85 | 21.85 | 24.02 | 24.02 | |

**(BR)** denotes Brakemotor


Send Quote Requests to info@automatedpt.com
Call +1(800)985-6929 To Order or Order Online At Nordgearmotors.com

DRIVESYSTEMS



# SK 9092.1 + Motor

## SK 9092.1AZS

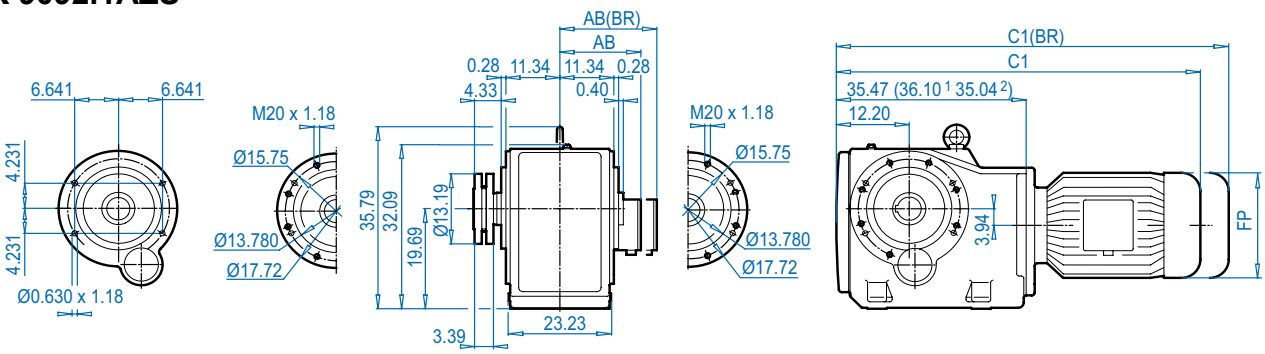


## SK 9092.1AZ**K**

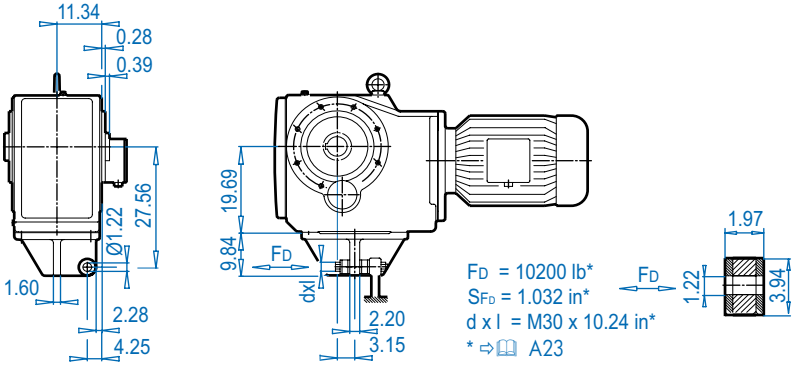


## SK 9092.1AZ**S** ⇨ 571

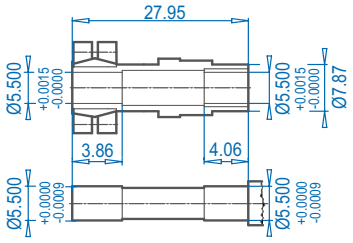


## SK 9092.1AZ**SH**

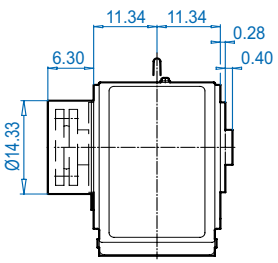


**Motor dimensions**.

| Standard eff. | 160M/L | | 180MX/LX | | 200L | 225S/M | | 250M[1)] | 280S[2)] | 280M[2)] | 315S[2)] | 315Ma[2)] | For Other Connection Possibilities please see ⇨ 555 & 557 |
|---|---|---|---|---|---|---|---|---|---|---|---|---|---|
| Energy eff. | 160MH | 160LH | | 180MH/LH | 200LH | | 225SH/MH | 250MH[1)] | 280SH[2)] | 280MH[2)] | 315SH[2)] | 315MHa[2)] | |
| AB | 8.90 | 8.90 | 10.20 | 10.20 | 12.05 | 12.05 | 13.19 | 15.43 | 17.01 | 17.01 | 19.69 | 19.69 | 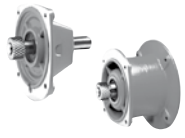 |
| AB (BR) | 8.90 | 8.90 | 10.20 | 10.20 | 12.05 | 12.05 | - | 15.43 | 17.01 | 17.01 | - | - | |
| C1 | 54.29 | 54.29 | 59.17 | 59.17 | 62.52 | 62.52 | 62.83 | 66.02 | 68.78 | 67.32 | 71.73 | 78.03 | |
| C1 (BR) | 60.87 | 60.87 | 63.30 | 63.30 | 69.10 | 69.10 | - | 75.87 | 75.87 | 78.74 | - | - | |
| FP | 12.60 | 12.60 | 12.60 | 14.09 | 15.67 | 15.67 | 18.50 | 19.49 | 21.85 | 21.85 | 24.02 | 24.02 | |

**(BR)** denotes Brakemotor

Dimensions in Inches DIMENSIONS
ALTERNATE SHAFTS SEE PAGES 566 - 573


Send Quote Requests to info@automatedpt.com
Call +1(800)985-6929 To Order or Order Online At Nordgearmotors.com

# SK 9092.1 + NEMA




## SK 9092.1

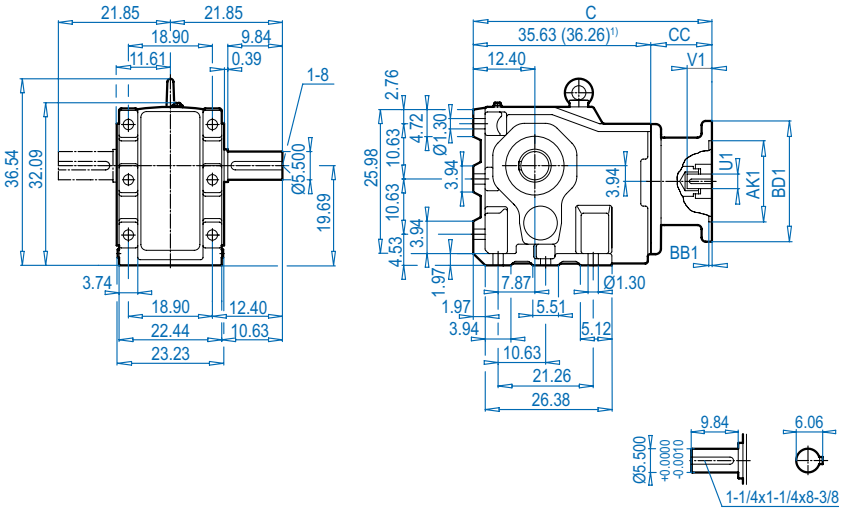


## NEMA Input

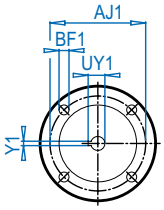


DIMENSIONS
Dimensions in Inches

## SK 9092.1VF

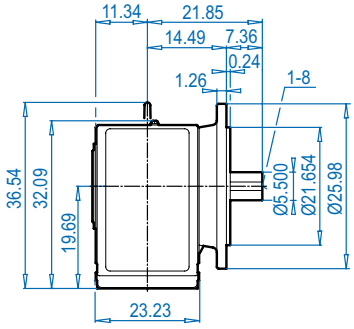


## SK 9092.1AFS

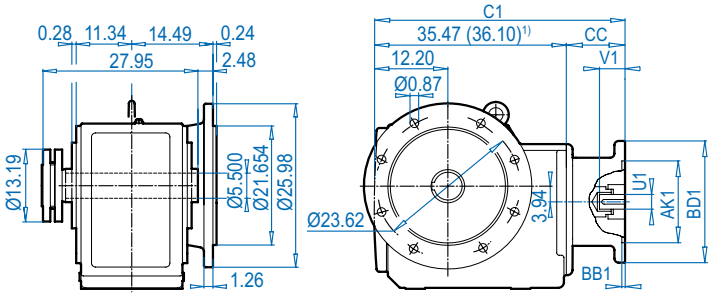


ALTERNATE SHAFTS SEE PAGES 566 - 573

### NEMA Dimensions

| Type | AJ1 | AK1 | BB1 | BD1 | BF1 | U1 | V1 | UY1 | Y1 | C | C1 | CC |
|---|---|---|---|---|---|---|---|---|---|---|---|---|
| **180TC** | 7.25 | 8.500 | 0.23 | 9.17 | 0.59 | 1.125 | 2.62 | 1.24 | 0.250 | 43.15 | 42.99 | 7.52 |
| **210TC** | 7.25 | 8.500 | 0.23 | 9.17 | 0.59 | 1.375 | 3.12 | 1.52 | 0.312 | 43.15 | 42.99 | 7.52 |
| **250TC** | 7.25 | 8.500 | 0.23 | 9.17 | 0.59 | 1.625 | 3.75 | 1.80 | 0.375 | 47.01 | 46.85 | 11.38 |
| **280TC1)** | 9.00 | 10.500 | 0.23 | 13.78 | 0.59 | 1.875 | 4.38 | 2.10 | 0.500 | 47.01 | 47.48 | 11.38 |
| **320TC1)** | 11.00 | 12.500 | 0.24 | 15.75 | 0.75 | 2.125 | 5.00 | 2.35 | 0.500 | 46.61 | 46.45 | 10.35 |
| **360TC1)** | 11.00 | 12.500 | 0.24 | 21.65 | 0.75 | 2.375 | 5.62 | 2.65 | 0.625 | 49.55 | 49.39 | 13.29 |


Send Quote Requests to info@automatedpt.com
Call +1(800)985-6929 To Order or Order Online At Nordgearmotors.com

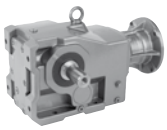


# SK 9092.1 + NEMA

## SK 9092.1AZS

**NEMA Input**

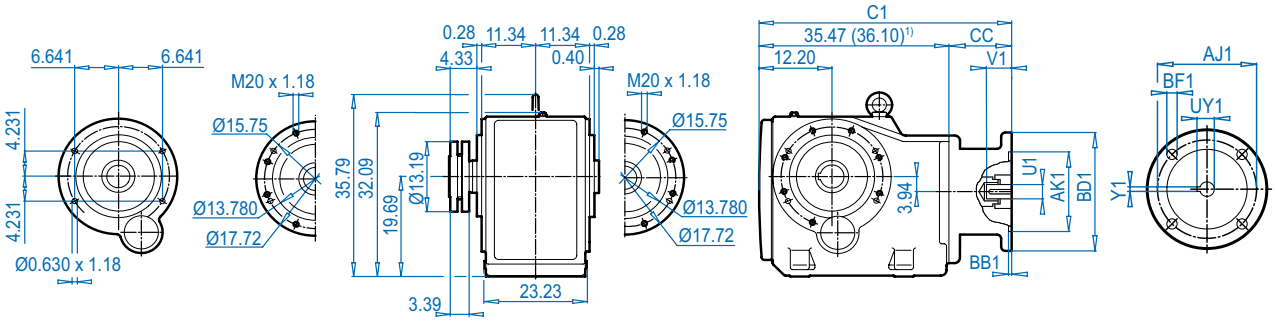


## SK 9092.1AZ**K**

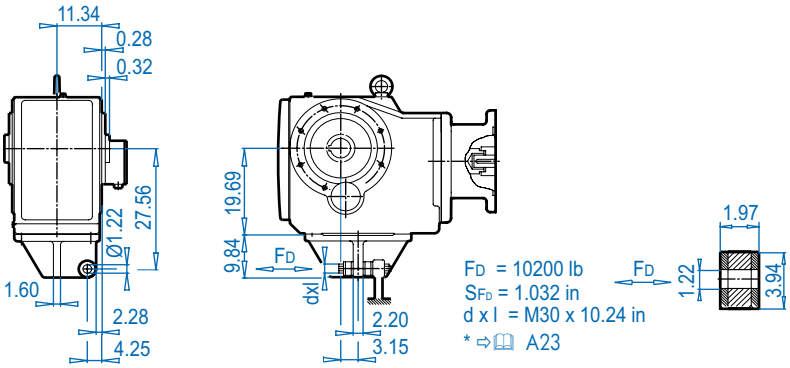


## SK 9092.1AZ**S** ⇨ 571

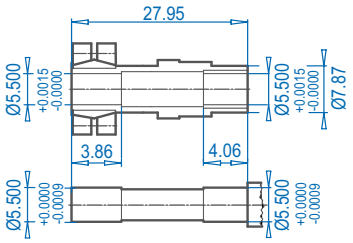


## SK 9092.1AZ**SH**

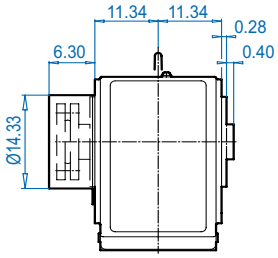


**NEMA Dimensions**

| Type | AJ1 | AK1 | BB1 | BD1 | BF1 | U1 | V1 | UY1 | Y1 | C1 | CC |
|---|---|---|---|---|---|---|---|---|---|---|---|
| **180TC** | 7.25 | 8.500 | 0.23 | 9.17 | 0.59 | 1.125 | 2.62 | 1.24 | 0.250 | 42.99 | 7.52 |
| **210TC** | 7.25 | 8.500 | 0.23 | 9.17 | 0.59 | 1.375 | 3.12 | 1.52 | 0.312 | 42.99 | 7.52 |
| **250TC** | 7.25 | 8.500 | 0.23 | 9.17 | 0.59 | 1.625 | 3.75 | 1.80 | 0.375 | 46.85 | 11.38 |
| **280TC**[1)] | 9.00 | 10.500 | 0.23 | 13.78 | 0.59 | 1.875 | 4.38 | 2.10 | 0.500 | 47.48 | 11.38 |
| **320TC**[1)] | 11.00 | 12.500 | 0.24 | 15.75 | 0.75 | 2.125 | 5.00 | 2.35 | 0.500 | 46.45 | 10.35 |
| **360TC**[1)] | 11.00 | 12.500 | 0.24 | 21.65 | 0.75 | 2.375 | 5.62 | 2.65 | 0.625 | 49.39 | 13.29 |




Send Quote Requests to info@automatedpt.com
Call +1(800)985-6929 To Order or Order Online At Nordgearmotors.com

# SK 9096.1 + Motor




## SK 9096.1

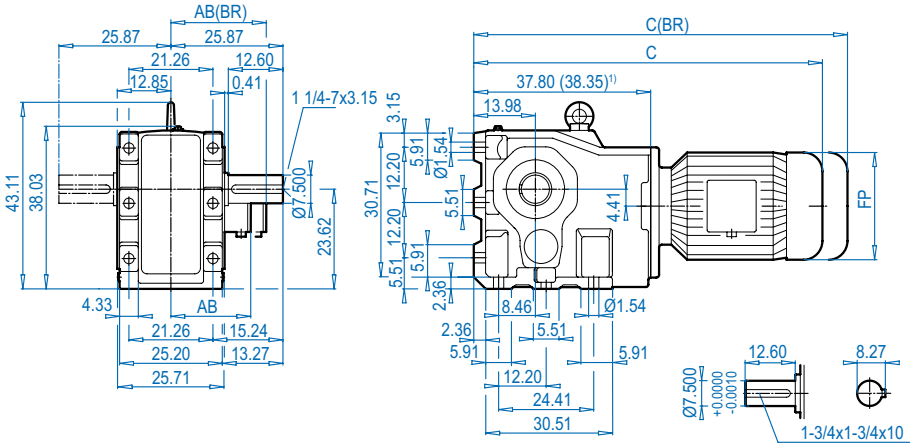


DIMENSIONS — Dimensions in Inches

## SK 9096.1VF

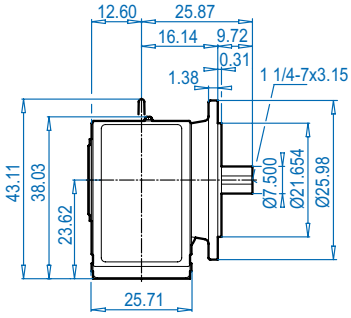


## SK 9096.1AFS

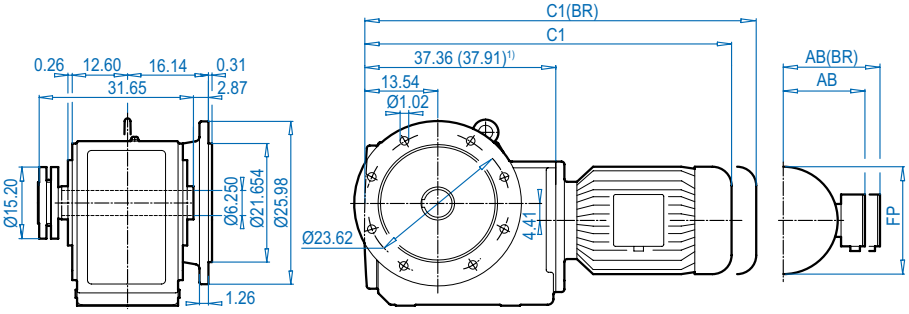


## SK 9096.1AZ**S** ⇨🕮 571

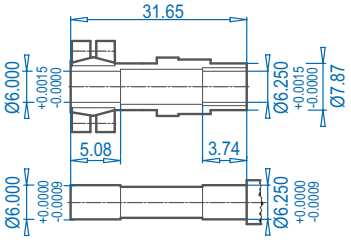


## SK 9096.1AZ**SH**

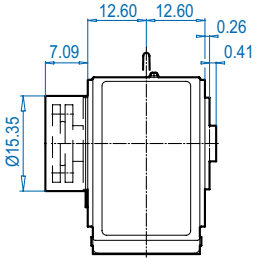


**Motor dimensions**.

| Standard eff. | 160M/L | | 180MX/LX | | 200L | 225S/M | | 250M[1)] | 280S[1)] | 280M[1)] | 315S[1)] | 315Ma[1)] | For Other Connection Possibilities please see ⇨🕮 555 & 557 |
|---|---|---|---|---|---|---|---|---|---|---|---|---|---|
| Energy eff. | 160MH | 160LH | | 180MH/LH | 200LH | | 225SH/MH | 250MH[1)] | 280SH[1)] | 280MH[1)] | 315SH[1)] | 315MHa[1)] | |
| **AB** | 8.90 | 8.90 | 10.20 | 10.20 | 12.05 | 12.05 | 13.19 | 15.43 | 17.01 | 17.01 | 19.69 | 19.69 |  |
| **AB (BR)** | 8.90 | 8.90 | 10.20 | 10.20 | 12.05 | 12.05 | - | 15.43 | 17.01 | 17.01 | - | - | |
| **C1** | 56.18 | 56.18 | 61.06 | 61.06 | 64.45 | 64.45 | 64.72 | 67.83 | 70.60 | 70.20 | 74.61 | 80.91 | |
| **C1 (BR)** | 62.76 | 62.76 | 65.20 | 65.20 | 71.02 | 71.02 | - | 77.68 | 77.68 | 81.61 | - | - | |
| **C** | 56.62 | 56.62 | 61.50 | 61.50 | 64.84 | 64.84 | 65.16 | 68.27 | 71.02 | 70.63 | 75.04 | 81.34 | |
| **C (BR)** | 63.20 | 63.20 | 65.63 | 65.63 | 71.42 | 71.42 | - | 78.11 | 78.11 | 82.05 | - | - | |
| **FP** | 12.60 | 12.60 | 12.60 | 14.09 | 15.67 | 15.67 | 18.50 | 19.49 | 21.85 | 21.85 | 24.02 | 24.02 | |

**(BR)** denotes Brakemotor

ALTERNATE SHAFTS SEE PAGES 566 - 573


Send Quote Requests to info@automatedpt.com
Call +1(800)985-6929 To Order or Order Online At Nordgearmotors.com

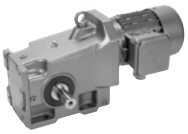

# SK 9096.1 + Motor

## SK 9096.1AZS

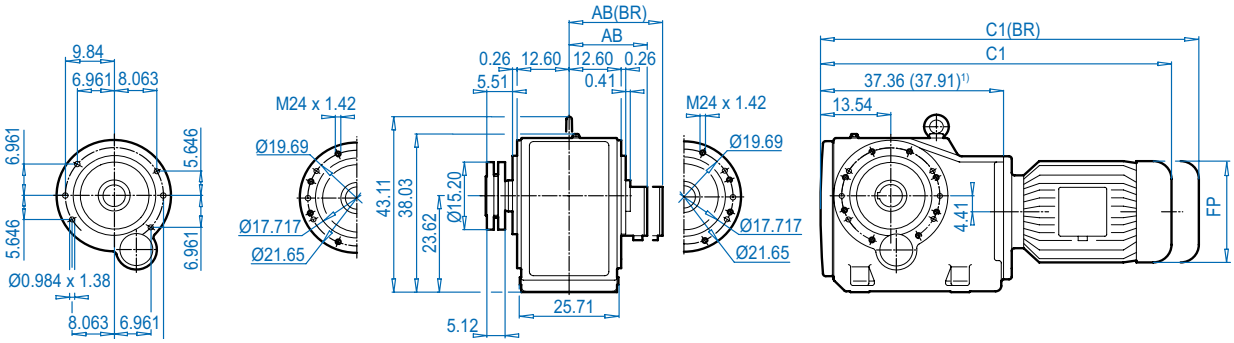


## SK 9096.1AZ**K**

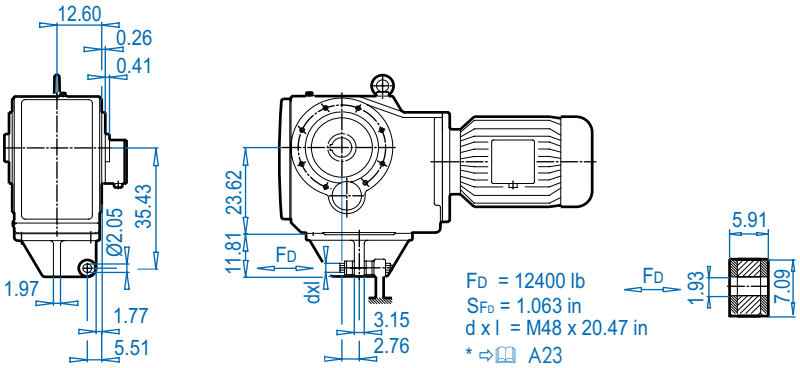


## SK 9096.1AZ**S** ⇨ 571

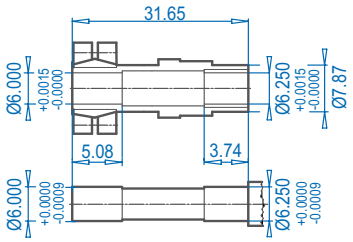


## SK 9096.1AZ**SH**

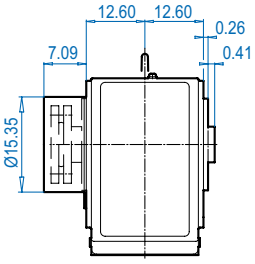


**Motor dimensions**.

| Standard eff. | 160M/L | | 180MX/LX | | 200L | 225S/M | | 250M[1)] | 280S[1)] | 280M[1)] | 315S[1)] | 315Ma[1)] | For Other Connection Possibilities please see ⇨ 555 & 557 |
|---|---|---|---|---|---|---|---|---|---|---|---|---|---|
| Energy eff. | 160MH | 160LH | | 180MH/LH | 200LH | | 225SH/MH | 250MH[1)] | 280SH[1)] | 280MH[1)] | 315SH[1)] | 315MHa[1)] | |
| **AB** | 8.90 | 8.90 | 10.20 | 10.20 | 12.05 | 12.05 | 13.19 | 15.43 | 17.01 | 17.01 | 19.69 | 19.69 | 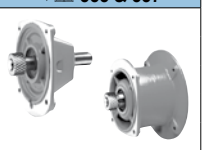 |
| **AB (BR)** | 8.90 | 8.90 | 10.20 | 10.20 | 12.05 | 12.05 | - | 15.43 | 17.01 | 17.01 | - | - | |
| **C1** | 56.18 | 56.18 | 61.06 | 61.06 | 64.45 | 64.45 | 64.72 | 67.83 | 70.60 | 70.20 | 74.61 | 80.91 | |
| **C1 (BR)** | 62.76 | 62.76 | 65.20 | 65.20 | 71.02 | 71.02 | - | 77.68 | 77.68 | 81.61 | - | - | |
| **FP** | 12.60 | 12.60 | 12.60 | 14.09 | 15.67 | 15.67 | 18.50 | 19.49 | 21.85 | 21.85 | 24.02 | 24.02 | |

**(BR)** denotes Brakemotor

Dimensions in Inches
DIMENSIONS
ALTERNATE SHAFTS SEE PAGES 566 - 573


Send Quote Requests to info@automatedpt.com
Call +1(800)985-6929 To Order or Order Online At Nordgearmotors.com

# SK 9096.1 + NEMA






## SK 9096.1

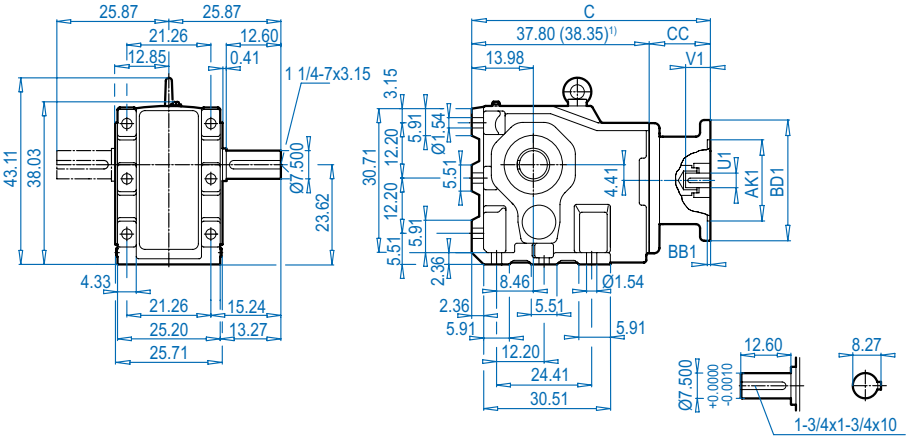


## NEMA Input

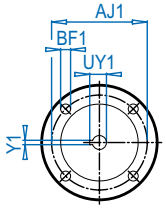


## SK 9096.1VF

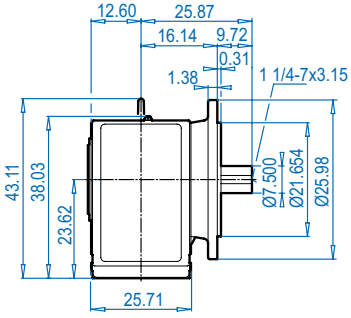


## SK 9096.1AFS

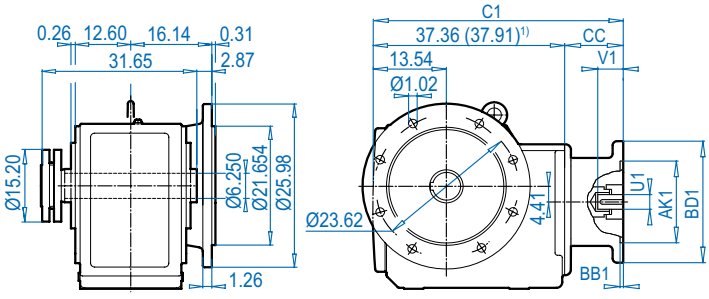


## SK 9096.1AZ**S** ⇨🕮 571

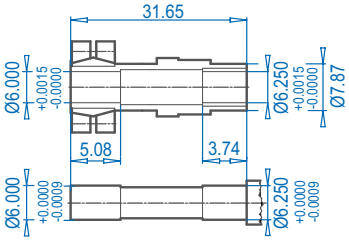


## SK 9096.1AZ**SH**

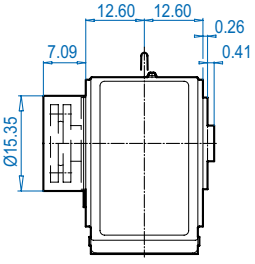


### NEMA Dimensions

| Type | AJ1 | AK1 | BB1 | BD1 | BF1 | U1 | V1 | UY1 | Y1 | C | C1 | CC |
|---|---|---|---|---|---|---|---|---|---|---|---|---|
| **180TC** | 7.25 | 8.500 | 0.23 | 9.17 | 0.59 | 1.125 | 2.62 | 1.24 | 0.250 | 45.32 | 44.88 | 7.52 |
| **210TC** | 7.25 | 8.500 | 0.23 | 9.17 | 0.59 | 1.375 | 3.12 | 1.52 | 0.312 | 45.32 | 44.88 | 7.52 |
| **250TC** | 7.25 | 8.500 | 0.23 | 9.17 | 0.59 | 1.625 | 3.75 | 1.80 | 0.375 | 49.18 | 48.47 | 11.38 |
| **280TC**1) | 9.00 | 10.500 | 0.23 | 13.78 | 0.59 | 1.875 | 4.38 | 2.10 | 0.500 | 49.18 | 48.47 | 11.38 |
| **320TC**1) | 11.00 | 12.500 | 0.24 | 15.75 | 0.75 | 2.125 | 5.00 | 2.35 | 0.500 | 48.70 | 48.26 | 10.35 |
| **360TC**1) | 11.00 | 12.500 | 0.24 | 21.65 | 0.75 | 2.375 | 5.62 | 2.65 | 0.625 | 51.64 | 51.20 | 13.29 |

ALTERNATE SHAFTS SEE PAGES 566 - 573


Send Quote Requests to info@automatedpt.com
Call +1(800)985-6929 To Order or Order Online At Nordgearmotors.com

DRIVESYSTEMS

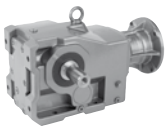



# SK 9096.1 + NEMA

## SK 9096.1AZS

**NEMA Input**

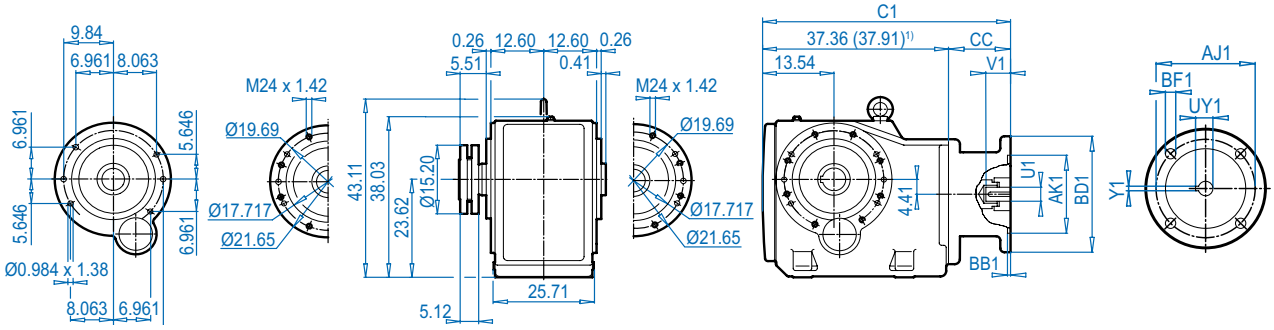


## SK 9096.1AZ**K**

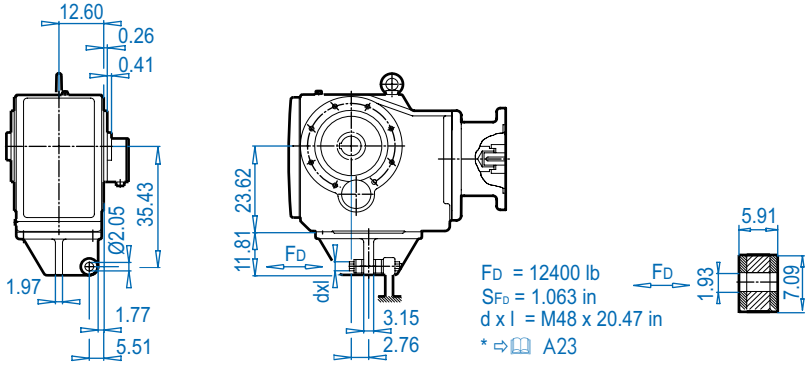


## SK 9096.1AZ**S** ⇨ 571

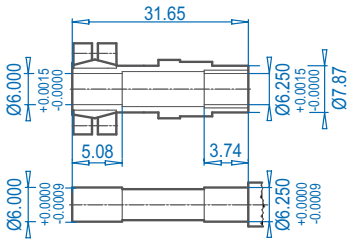


## SK 9096.1AZ**SH**

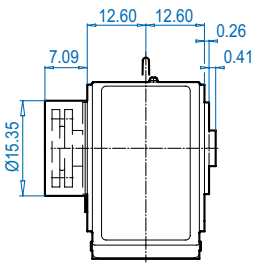


**NEMA Dimensions**

| Type | AJ1 | AK1 | BB1 | BD1 | BF1 | U1 | V1 | UY1 | Y1 | C1 | CC |
|---|---|---|---|---|---|---|---|---|---|---|---|
| **180TC** | 7.25 | 8.500 | 0.23 | 9.17 | 0.59 | 1.125 | 2.62 | 1.24 | 0.250 | 44.88 | 7.52 |
| **210TC** | 7.25 | 8.500 | 0.23 | 9.17 | 0.59 | 1.375 | 3.12 | 1.52 | 0.312 | 44.88 | 7.52 |
| **250TC** | 7.25 | 8.500 | 0.23 | 9.17 | 0.59 | 1.625 | 3.75 | 1.80 | 0.375 | 48.47 | 11.38 |
| **280TC**[1)] | 9.00 | 10.500 | 0.23 | 13.78 | 0.59 | 1.875 | 4.38 | 2.10 | 0.500 | 48.47 | 11.38 |
| **320TC**[1)] | 11.00 | 12.500 | 0.24 | 15.75 | 0.75 | 2.125 | 5.00 | 2.35 | 0.500 | 48.26 | 10.35 |
| **360TC**[1)] | 11.00 | 12.500 | 0.24 | 21.65 | 0.75 | 2.375 | 5.62 | 2.65 | 0.625 | 51.20 | 13.29 |

Dimensions in Inches
DIMENSIONS
ALTERNATE SHAFTS SEE PAGES 566 - 573


Send Quote Requests to info@automatedpt.com
Call +1(800)985-6929 To Order or Order Online At Nordgearmotors.com

# SK 9072.1/32 - SK 9092.1/52




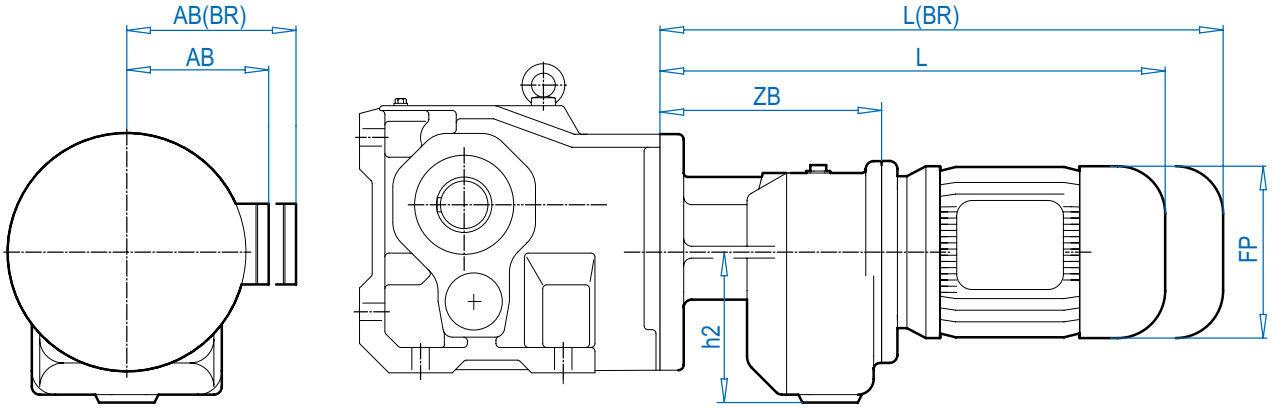




## Motor dimensions

| Type | SK 9072.1/32 | | | | | SK 9072.1/42 | | | | For Other Connection Possibilities please see ⇨🕮 555 & 557 |
|---|---|---|---|---|---|---|---|---|---|---|
| Standard eff. | 71S/L | 80S/L | 90S/L | 100L | | 90S/L | 100L | | 132S/M | |
| Energy eff. | | 80LH | 90SH/LH | 100LH | 112MH | 90SH/LH | 100LH | 112MH | 132SH/MH | |
| AB | 4.88 | 5.59 | 5.79 | 6.65 | 7.05 | 5.79 | 6.65 | 7.05 | 8.03 |  |
| AB (BR) | 5.24 | 5.63 | 5.83 | 6.26 | 6.69 | 5.83 | 6.26 | 6.69 | 7.72 | |
| L | 18.39 | 19.37 | 20.98 | 22.17 | 23.07 | 21.86 | 23.03 | 23.94 | 27.32 | |
| L (BR) | 20.67 | 21.89 | 23.94 | 25.75 | 26.73 | 24.80 | 26.61 | 27.60 | 31.54 | |
| ZB | 9.33 | | | | | 10.98 | | | | |
| h2 | 6.10 | | | | | 6.89 | | | | |
| FP | 5.71 | 6.50 | 7.20 | 7.91 | 8.98 | 7.20 | 7.91 | 8.98 | 10.47 | |
| | SK 9072.1 ⇨🕮 532 | | | | | SK 9072.1 ⇨🕮 532 | | | | |

ALTERNATE SHAFTS SEE PAGES 566 - 573

| Type | SK 9082.1/42 | | | | SK 9082.1/52, SK 9086.1/52 | | | | | | | | For Other Connection Possibilities please see ⇨🕮 555 & 557 |
|---|---|---|---|---|---|---|---|---|---|---|---|---|---|
| Standard eff. | 90S/L | 100L | | 132S/M | 90S/L | 100L | | 132S/M | 160M/L | | 180MX/LX | | |
| Energy eff. | 90SH/LH | 100LH | 112MH | 132SH/MH | 90SH/LH | 100LH | 112MH | 132SH/MH | 160MH | 160LH | | 180MH/LH | |
| AB | 5.79 | 6.65 | 7.05 | 8.03 | 5.79 | 6.65 | 7.05 | 8.03 | 8.90 | 8.90 | 10.20 | 10.20 |  |
| AB (BR) | 5.83 | 6.26 | 6.69 | 7.72 | 5.83 | 6.26 | 6.69 | 7.72 | 8.90 | 8.90 | 10.20 | 10.20 | |
| L | 21.10 | 22.28 | 23.19 | 26.57 | 23.46 | 23.86 | 24.76 | 28.15 | 30.63 | 30.63 | 35.51 | 35.51 | |
| L (BR) | 24.06 | 25.87 | 26.86 | 30.79 | 26.42 | 27.44 | 28.43 | 32.36 | 37.21 | 37.21 | 39.64 | 39.64 | |
| ZB | 10.24 | | | | 11.81 | | | | | | | | |
| h2 | 6.89 | | | | 8.35 | | | | | | | | |
| FP | 7.20 | 7.91 | 8.98 | 10.47 | 7.20 | 7.91 | 8.98 | 10.47 | 12.60 | 12.60 | 14.09 | 14.09 | |
| | SK 9082.1 ⇨🕮 536 | | | | SK 9082.1 ⇨🕮 536, SK 9086.1 ⇨🕮 540 | | | | | | | | |

| Type | SK 9092.1/52 | | | | | | | | For Other Connection Possibilities please see ⇨🕮 555 & 557 |
|---|---|---|---|---|---|---|---|---|---|
| Standard eff. | 90S/L | 100L | | 132S/M | 160M/L | | 180MX/LX | | |
| Energy eff. | 90SH/LH | 100LH | 112MH | 132SH/MH | 160MH | 160LH | | 180MH/LH | |
| AB | 5.79 | 6.65 | 7.05 | 8.03 | 8.90 | 8.90 | 10.20 | 10.20 |  |
| AB (BR) | 5.83 | 6.26 | 6.69 | 7.72 | 8.90 | 8.90 | 10.20 | 10.20 | |
| L | 22.68 | 23.86 | 24.76 | 28.15 | 30.63 | 30.63 | 35.51 | 35.51 | |
| L (BR) | 25.63 | 27.44 | 28.43 | 32.36 | 37.21 | 37.21 | 39.64 | 39.64 | |
| ZB | 11.81 | | | | | | | | |
| h2 | 8.35 | | | | | | | | |
| FP | 7.20 | 7.91 | 8.98 | 10.47 | 12.60 | 12.60 | 12.60 | 14.09 | |
| | SK 9092.1 ⇨🕮 544 | | | | | | | | |

**(BR)** denotes Brakemotor


Send Quote Requests to info@automatedpt.com
Call +1(800)985-6929 To Order or Order Online At Nordgearmotors.com

DRIVESYSTEMS





# SK 9096.1/62
# SK 9096.1/63

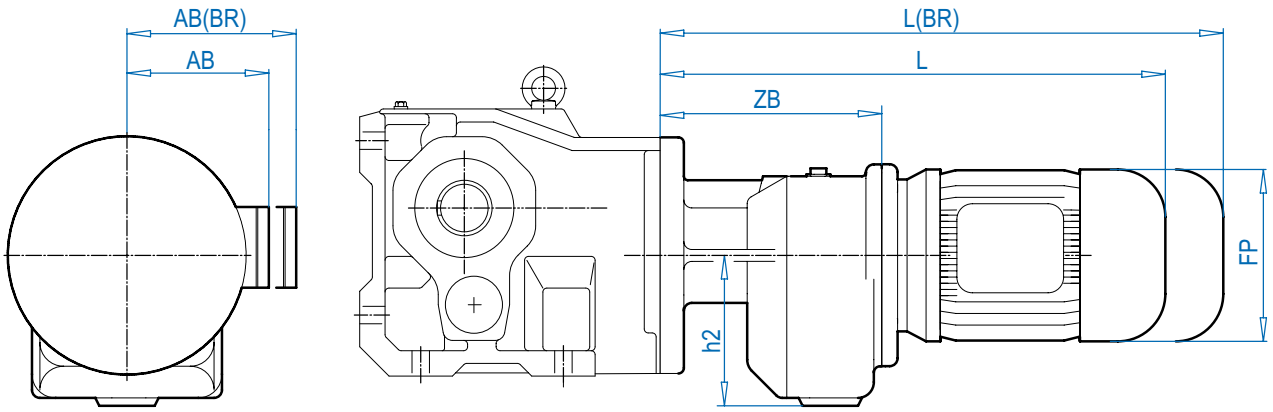


Dimensions in Inches
DIMENSIONS

ALTERNATE SHAFTS SEE PAGES 566 - 573

## Motor dimensions

| Type | SK9096.1/62 | | | | | | | | | | For Other Connection Possibilities please see ⇨🕮 555 & 557 |
|---|---|---|---|---|---|---|---|---|---|---|---|
| Standard eff. | 100L | | 132S/M | 160M/L | | 180MX/LX | | 200L | 225S/M | | |
| Energy eff. | 100LH | 112MH | 132SH/MH | 160MH | 160LH | | 180MH/LH | 200LH | | 225SH/MH | |
| AB | 6.65 | 7.05 | 8.03 | 8.90 | 8.90 | 10.20 | 10.20 | 12.05 | 12.05 | 13.19 |  |
| AB (BR) | 6.26 | 6.69 | 7.72 | 8.90 | 8.90 | 10.20 | 10.20 | 12.05 | 12.05 | - | |
| L | 28.11 | 28.62 | 32.91 | 34.61 | 34.61 | 39.49 | 39.49 | 42.88 | 42.88 | 43.15 | |
| L (BR) | 31.70 | 32.28 | 37.13 | 41.19 | 41.19 | 43.62 | 43.62 | 49.45 | 49.45 | - | |
| ZB | 15.79 | | | | | | | | | | |
| h2 | 9.65 | | | | | | | | | | |
| FP | 7.91 | 8.98 | 10.47 | 12.60 | 12.60 | 12.60 | 14.09 | 15.67 | 15.67 | 18.50 | |
| | SK 9096.1 ⇨🕮 548 | | | | | | | | | | |

| Type | SK 9096.1/63 | | | | | | | | | | For Other Connection Possibilities please see ⇨🕮 555 & 557 |
|---|---|---|---|---|---|---|---|---|---|---|---|
| Standard eff. | 90S/L | 100L | | 132S/M | 160M/L | | 180MX/LX | | | | |
| Energy eff. | 90SH/LH | 100LH | 112MH | 132SH/MH | 160MH | 160LH | | 180MH/LH | | | |
| AB | 5.79 | 6.65 | 7.05 | 8.03 | 8.90 | 8.90 | 10.20 | 10.20 | | |  |
| AB (BR) | 5.83 | 6.26 | 6.69 | 7.72 | 8.90 | 8.90 | 10.20 | 10.20 | | | |
| L | 25.63 | 27.09 | 27.60 | 31.89 | 33.58 | 33.58 | 38.46 | 38.46 | | | |
| L (BR) | 28.58 | 30.67 | 31.26 | 36.10 | 40.16 | 40.16 | 42.59 | 42.59 | | | |
| ZB | 14.76 | | | | | | | | | | |
| h2 | 9.65 | | | | | | | | | | |
| FP | 7.20 | 7.91 | 8.98 | 10.47 | 12.60 | 12.60 | 14.09 | 14.09 | | | |
| | SK 9096.1 ⇨🕮 548 | | | | | | | | | | |

**BR)** denotes Brakemotor


Send Quote Requests to info@automatedpt.com
Call +1(800)985-6929 To Order or Order Online At Nordgearmotors.com

# Solid Input Shaft
# Type - W


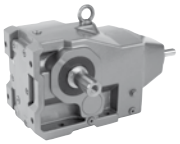



## SK 92072

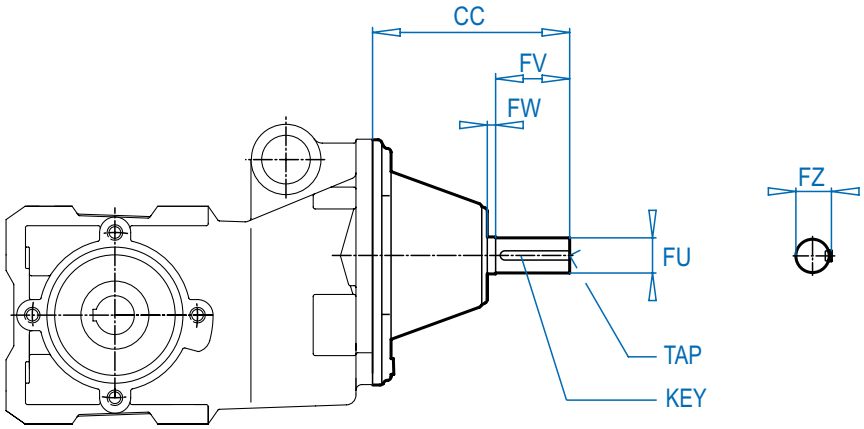


## SK 92172 - SK 92772

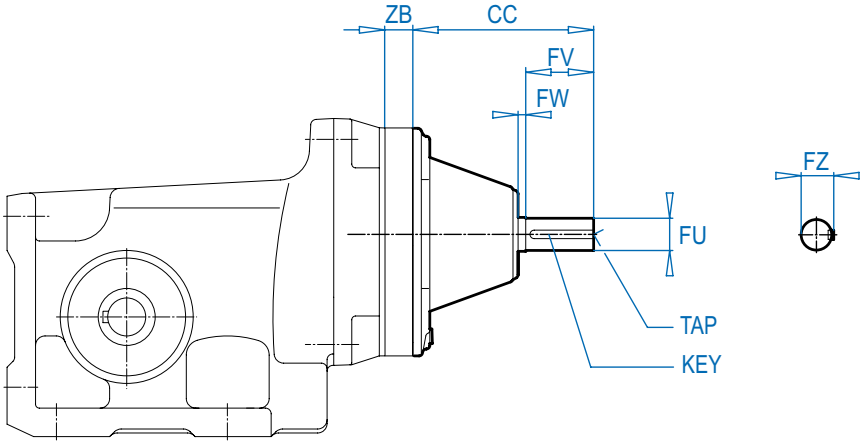


| Unit | CC | FW | FV | FU | FZ | TAP | KEY | Unit Dimensions |
|---|---|---|---|---|---|---|---|---|
| **SK 92072** | 3.89 | 0.16 | 1.13 | 0.500 +0.0000 - 0.0005 | 0.56 | 1/4-20 | 1/8 x 1/8 x 7/8 | ⇨🕮 464 |
| **SK 92172** | 3.89 | 0.16 | 1.13 | 0.500 +0.0000 - 0.0005 | 0.56 | 1/4-20 | 1/8 x 1/8 x 7/8 | ⇨🕮 468 |
| **SK 92372** | 4.33 | 0.16 | 1.57 | 0.625 +0.0000 - 0.0005 | 0.70 | 1/4-20 | 3/16 x 3/16 x 1 1/4 | ⇨🕮 472 |
| **SK 92672** | 4.33 | 0.16 | 1.57 | 0.750 +0.0000 - 0.0005 | 0.83 | 1/4-20 | 3/16 x 3/16 x 1 1/4 | ⇨🕮 476 |
| **SK 92772** | 4.84 | 0.12 | 1.97 | 0.875 +0.0000 - 0.0005 | 0.96 | 1/4-20 | 3/16 x 3/16 x 1 5/8 | ⇨🕮 480 |


Send Quote Requests to info@automatedpt.com
Call +1(800)985-6929 To Order or Order Online At Nordgearmotors.com

DRIVESYSTEMS

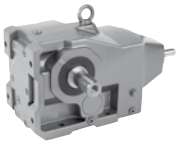



# Solid Input Shaft Type - W

## SK 9012.1 - SK 9086.1

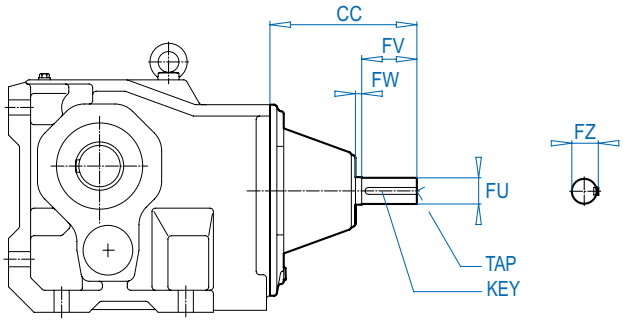


## SK 9092.1 - SK 9096.1

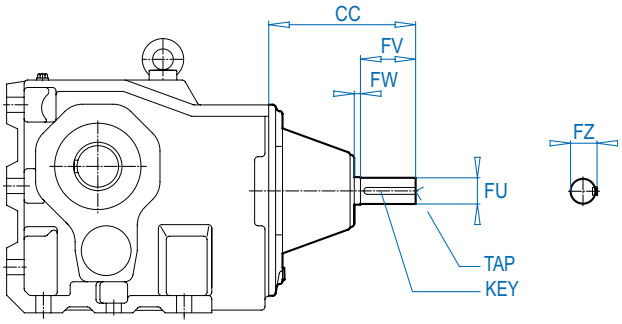


Dimensions in Inches
DIMENSIONS

| Unit | CC | FW | FV | FU | FZ | TAP | KEY | Unit Dimensions |
|---|---|---|---|---|---|---|---|---|
| **SK 9012.1** | 4.73 | 0.28 | 1.50 | 0.625 +0.0000 -0.0005 | 0.70 | 1/4-20 | 3/16 x 3/16 x 1 1/4 | ⇨🕮 484 |
| **SK 9013.1** | 4.73 | 0.28 | 1.50 | 0.625 +0.0000 -0.0005 | 0.70 | 1/4-20 | 3/16 x 3/16 x 1 1/4 | ⇨🕮 488 |
| **SK 9016.1** | 4.73 | 0.28 | 1.50 | 0.625 +0.0000 -0.0005 | 0.70 | 1/4-20 | 3/16 x 3/16 x 1 1/4 | ⇨🕮 492 |
| **SK 9017.1** | 4.73 | 0.28 | 1.50 | 0.625 +0.0000 -0.0005 | 0.70 | 1/4-20 | 3/16 x 3/16 x 1 1/4 | ⇨🕮 496 |
| **SK 9022.1** | 4.73 | 0.28 | 1.50 | 0.625 +0.0000 -0.0005 | 0.70 | 1/4-20 | 3/16 x 3/16 x 1 1/4 | ⇨🕮 500 |
| **SK 9023.1** | 4.73 | 0.28 | 1.50 | 0.625 +0.0000 -0.0005 | 0.70 | 1/4-20 | 3/16 x 3/16 x 1 1/4 | ⇨🕮 504 |
| **SK 9032.1** | 6.80 | 0.31 | 2.00 | 0.875 +0.0000 -0.0005 | 0.96 | 1/4-20 | 3/16 x 3/16 x 1 5/8 | ⇨🕮 508 |
| **SK 9033.1** | 4.73 | 0.28 | 1.50 | 0.625 +0.0000 -0.0005 | 0.70 | 1/4-20 | 3/16 x 3/16 x 1 1/4 | ⇨🕮 512 |
| **SK 9042.1** | 8.36 | 0.31 | 3.12 | 1.500 +0.0000 -0.0005 | 1.66 | 5/8-11 | 3/8 x 3/8 x 2 1/2 | ⇨🕮 516 |
| **SK 9043.1** | 6.80 | 0.31 | 2.00 | 0.875 +0.0000 -0.0005 | 0.96 | 1/4-20 | 3/16 x 3/16 x 1 5/8 | ⇨🕮 520 |
| **SK 9052.1** | 8.36 | 0.31 | 3.12 | 1.500 +0.0000 -0.0005 | 1.66 | 5/8-11 | 3/8 x 3/8 x 2 1/2 | ⇨🕮 524 |
| **SK 9053.1** | 6.80 | 0.31 | 2.00 | 0.875 +0.0000 -0.0005 | 0.96 | 1/4-20 | 3/16 x 3/16 x 1 5/8 | ⇨🕮 528 |
| **SK 9072.1** | 11.38 | 0.31 | 4.38 | 1.625 +0.0000 -0.0005 | 1.79 | 5/8-11 | 3/8 x 3/8 x 3 5/8 | ⇨🕮 532 |
| **SK 9072.1/32** | 6.80 | 0.31 | 2.00 | 0.875 +0.0000 -0.0005 | 0.96 | 1/4-20 | 3/16 x 3/16 x 1 5/8 | ⇨🕮 552 |
| **SK 9072.1/42** | 8.36 | 0.31 | 3.12 | 1.500 +0.0000 -0.0005 | 1.66 | 5/8-11 | 3/8 x 3/8 x 2 1/2 | ⇨🕮 552 |
| **SK 9082.1** | 15.61 | 0.47 | 5.50 | 2.500 +0.0000 -0.0010 | 2.77 | 3/4-10 | 5/8 x 5/8 x 4 5/8 | ⇨🕮 536 |
| **SK 9082.1/42** | 8.36 | 0.31 | 3.12 | 1.500 +0.0000 -0.0005 | 1.66 | 5/8-11 | 3/8 x 3/8 x 2 1/2 | ⇨🕮 552 |
| **SK 9082.1/52** | 8.36 | 0.31 | 3.12 | 1.500 +0.0000 -0.0005 | 1.66 | 5/8-11 | 3/8 x 3/8 x 2 1/2 | ⇨🕮 552 |
| **SK 9086.1** | 15.61 | 0.47 | 5.50 | 2.500 +0.0000 -0.0010 | 2.77 | 3/4-10 | 5/8 x 5/8 x 4 5/8 | ⇨🕮 540 |
| **SK 9086.1/52** | 8.36 | 0.31 | 3.12 | 1.500 +0.0000 -0.0005 | 1.66 | 5/8-11 | 3/8 x 3/8 x 2 1/2 | ⇨🕮 552 |
| **SK 9092.1** | 15.61 | 0.47 | 5.50 | 2.500 +0.0000 -0.0010 | 2.77 | 3/4-10 | 5/8 x 5/8 x 4 5/8 | ⇨🕮 544 |
| **SK 9092.1/52** | 8.36 | 0.31 | 3.12 | 1.500 +0.0000 -0.0005 | 1.66 | 5/8-11 | 3/8 x 3/8 x 2 1/2 | ⇨🕮 552 |
| **SK 9096.1** | 9.96 | 0.51 | 5.51 | 2.750 +0.0000 -0.0010 | 3.03 | 3/4-10 | 5/8 x 5/8 x 4 5/8 | ⇨🕮 548 |
| **SK 9096.1/62** | 11.38 | 0.31 | 4.38 | 1.625 +0.0000 -0.0005 | 1.79 | 5/8-11 | 3/8 x 3/8 x 3 5/8 | ⇨🕮 553 |
| **SK 9096.1/63** | 8.36 | 0.31 | 3.12 | 1.500 +0.0000 -0.0005 | 1.66 | 5/8-11 | 3/8 x 3/8 x 2 1/2 | ⇨🕮 553 |


Send Quote Requests to info@automatedpt.com
Call +1(800)985-6929 To Order or Order Online At Nordgearmotors.com

# IEC Inputs



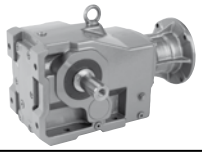

## SK 92072 - SK 92772

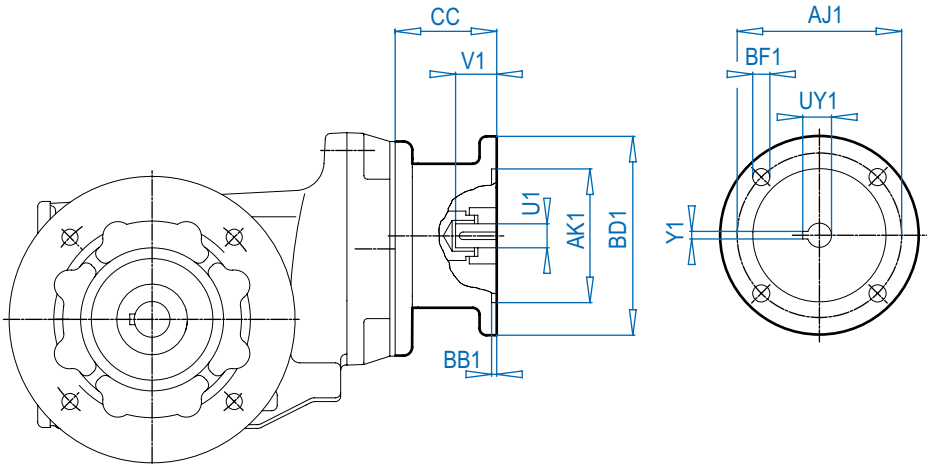


DIMENSIONS – Dimensions in Inches

**IEC Dimensions (mm)**

| Input | CC | AJ1 | AK1 | BB1 | BD1 | BF1 | U1 | V1 | UY1 | Y1 |
|---|---|---|---|---|---|---|---|---|---|---|
| **IEC 63** | 85 | 115 | 95 | 3.5 | 140 | M8 | 11 | 23 | 12.8 | 4 |
| **IEC 71** | 85 | 130 | 110 | 4.0 | 160 | M8 | 14 | 30 | 16.3 | 5 |
| **IEC 80** | 102.5 | 165 | 130 | 4.0 | 200 | M10 | 19 | 40 | 21.8 | 6 |
| **IEC 90** | 102.5 | 165 | 130 | 4.0 | 200 | M10 | 24 | 50 | 27.3 | 8 |
| **IEC 100** | 125.5 | 215 | 180 | 5.0 | 250 | M12 | 28 | 60 | 31.3 | 8 |
| **IEC 112** | 125.5 | 215 | 180 | 5.0 | 250 | M12 | 28 | 60 | 31.3 | 8 |
| **IEC 132** | 175 | 265 | 230 | 5.0 | 300 | M12 | 38 | 80 | 41.3 | 10 |
| **IEC 160** | – | 300 | 250 | 6.0 | 350 | M16 | 42 | 110 | 45.3 | 12 |
| **IEC 180** | – | 300 | 250 | 6.0 | 350 | M16 | 48 | 110 | 51.8 | 14 |
| **IEC 200** | – | 350 | 300 | 6.0 | 400 | M16 | 55 | 110 | 59.3 | 16 |


Send Quote Requests to info@automatedpt.com
Call +1(800)985-6929 To Order or Order Online At Nordgearmotors.com



# IEC Inputs

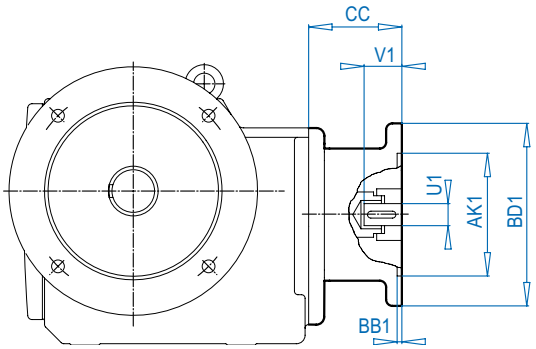


Figure 1
4 Bolt Flange

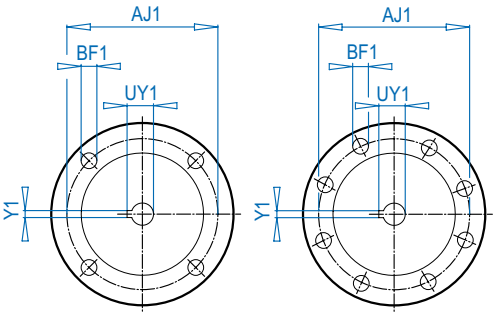


Figure 2
8 Bolt Flange
(for IEC 225 - 315)

## IEC Dimensions (mm)

| Input | AJ1 | AK1 | BB1 | BD1 | BF1 | U1 | V1 | UY1 | Y1 | Flange |
|---|---|---|---|---|---|---|---|---|---|---|
| IEC 63 | 115 | 95 | 3.5 | 140 | M8 | 11 | 23 | 12.8 | 4 | Fig. 1 |
| IEC 71 | 130 | 110 | 4.0 | 160 | M8 | 14 | 30 | 16.3 | 5 | Fig. 1 |
| IEC 80 | 165 | 130 | 4.0 | 200 | M10 | 19 | 40 | 21.8 | 6 | Fig. 1 |
| IEC 90 | 165 | 130 | 4.0 | 200 | M10 | 24 | 50 | 27.3 | 8 | Fig. 1 |
| IEC 100 | 215 | 180 | 5.0 | 250 | M12 | 28 | 60 | 31.3 | 8 | Fig. 1 |
| IEC 112 | 215 | 180 | 5.0 | 250 | M12 | 28 | 60 | 31.3 | 8 | Fig. 1 |
| IEC 132 | 265 | 230 | 5.0 | 300 | M12 | 38 | 80 | 41.3 | 10 | Fig. 1 |
| IEC 160 | 300 | 250 | 6.0 | 350 | M16 | 42 | 110 | 45.3 | 12 | Fig. 1 |
| IEC 180 | 300 | 250 | 6.0 | 350 | M16 | 48 | 110 | 51.8 | 14 | Fig. 1 |
| IEC 200 | 350 | 300 | 6.0 | 400 | M16 | 55 | 110 | 59.3 | 16 | Fig. 1 |
| IEC 225 | 400 | 350 | 6.0 | 450 | M16 | 60 | 140 | 64.4 | 18 | Fig. 2 |
| IEC 250 | 500 | 450 | 6.0 | 550 | M16 | 65 | 140 | 69.4 | 18 | Fig. 2 |
| IEC 280 | 500 | 450 | 6.0 | 550 | M16 | 75 | 140 | 79.9 | 20 | Fig. 2 |
| IEC 315 | 600 | 550 | 7.0 | 660 | M20 | 80 | 170 | 85.4 | 22 | Fig. 2 |



## CC Dimensions

| Unit | IEC63 | IEC 71 | IEC 80 | IEC 90 | IEC 100 | IEC 112 | IEC 132 | IEC 160 | IEC 180 | IEC 200 | IEC 225 | IEC 250 | IEC 280 | IEC 315 |
|---|---|---|---|---|---|---|---|---|---|---|---|---|---|---|
| SK 9012.1<br>SK 9013.1 | 85 | 89 | 105 | 105 | 130 | 130 | – | – | – | – | – | – | – | – |
| SK 9016.1<br>SK 9017.1 | 85 | 89 | 105 | 105 | 130 | 130 | – | – | – | – | – | – | – | – |
| SK 9022.1<br>SK 9023.1 | 85 | 89 | 105 | 105 | 130 | 130 | – | – | – | – | – | – | – | – |
| SK 9032.1 | – | 88 | 107 | 107 | 124 | 124 | 156 | – | – | – | – | – | – | – |
| SK 9033.1 | 85 | 89 | 105 | 105 | 130 | 130 | – | – | – | – | – | – | – | – |
| SK 9042.1 | – | – | – | 109 | 133 | 133 | 190 | 194 | 194 | – | – | – | – | – |
| SK 9043.1 | – | 88 | 107 | 107 | 124 | 124 | 156 | – | – | – | – | – | – | – |
| SK 9052.1 | – | – | – | 109 | 133 | 133 | 190 | 194 | 194 | – | – | – | – | – |
| SK 9053.1 | – | 88 | 107 | 107 | 124 | 124 | 156 | – | – | – | – | – | – | – |
| SK 9072.1 | – | – | – | – | 127 | 127 | 177 | 266 | 266 | 229 | 303 | – | – | – |
| SK 9072.1/32 | – | 88 | 107 | 107 | 124 | 124 | 156 | – | – | – | – | – | – | – |
| SK 9072.1/42 | – | – | – | 109 | 133 | 133 | 190 | 194 | 194 | – | – | – | – | – |
| SK 9082.1 | – | – | – | – | – | – | 177 | 266 | 266 | 229 | 303 | 303.5 | 303.5 | 381.5 |
| SK 9082.1/42/52 | – | – | – | 109 | 133 | 133 | 190 | 194 | 194 | – | – | – | – | – |
| SK 9086.1 | – | – | – | – | – | – | 177 | 266 | 266 | 229 | 303 | 303.5 | 303.5 | 381.5 |
| SK 9086.1/52 | – | – | – | 109 | 133 | 133 | 190 | 194 | 194 | – | – | – | – | – |
| SK 9092.1 | – | – | – | – | – | – | 177 | 266 | 266 | 229 | 303 | 303.5 | 303.5 | 381.5 |
| SK 9092.1/52 | – | – | – | 109 | 133 | 133 | 190 | 194 | 194 | – | – | – | – | – |
| SK 9096.1 | – | – | – | – | – | – | 177 | 266 | 266 | 229 | 303 | 303.5 | 303.5 | 381.5 |
| SK 9096.1/62 | – | – | – | – | 127 | 127 | 177 | 266 | 266 | 229 | 303 | – | – | – |
| SK 9096.1/63 | – | – | – | 109 | 133 | 133 | 190 | 194 | 194 | – | – | – | – | – |


Send Quote Requests to info@automatedpt.com
Call +1(800)985-6929 To Order or Order Online At Nordgearmotors.com

# B14 Flange Design Option VZ





DRIVESYSTEMS

## SK 92072 VZ

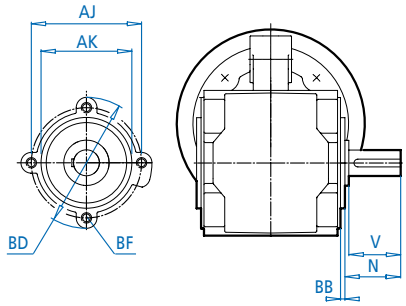


## SK 92172 VZ - SK 92772 VZ

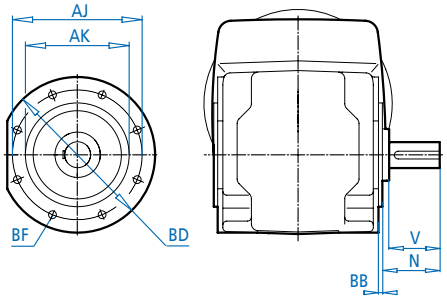


## SK 9072.1 - SK 9096.1/63 VZ

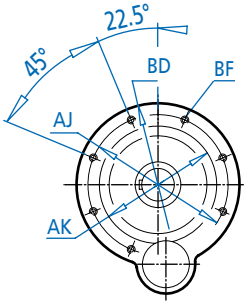


## SK 9012.1 - SK 9052.1 VZ

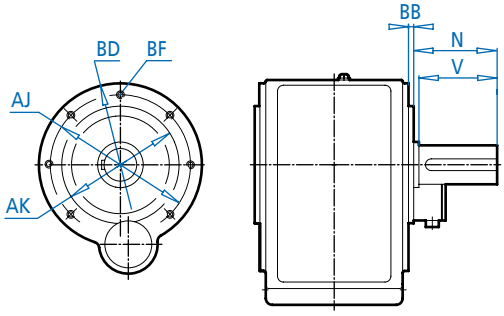


DIMENSIONS — Dimensions in Inches

ALTERNATE SHAFTS SEE PAGES 566 - 573

| Type | Mounting dimensions flange B14 | | | | | Shaft dimensions | |
|---|---|---|---|---|---|---|---|
| | BD | AK | AJ | BB | BF(mm) | V | N |
| SK 92072 VZ | 4.04 | 2.756 | 3.35 | 0.10 | M8 x 13 | 1.50 | 1.69 |
| SK 92172 VZ | 4.72 | 3.150 | 3.94 | 0.12 | M6 x 13 | 1.50 | 1.73 |
| SK 92372 VZ | 5.51 | 3.740 | 4.53 | 0.12 | M8 x 13 | 1.97 | 2.20 |
| SK 92672 VZ | 5.51 | 3.740 | 4.53 | 0.12 | M8 x 13 | 2.36 | 2.52 |
| SK 92772 VZ | 6.30 | 4.331 | 5.12 | 0.16 | M8 x 13 | 2.76 | 2.95 |
| SK 9012.1 VZ<br>SK 9013.1 VZ | 5.51 | 3.740 | 4.53 | 0.12 | M8 x 13 | 2.36 | 2.52 |
| SK 9016.1 VZ<br>SK 9017.1 VZ | 5.51 | 3.740 | 4.53 | 0.12 | M8 x 13 | 2.76 | 2.91 |
| SK 9022.1 VZ<br>SK 9023.1 VZ | 6.30 | 4.331 | 5.12 | 0.16 | M8 x 13 | 2.76 | 2.95 |
| SK 9032.1 VZ<br>SK 9033.1 VZ | 7.87 | 5.118 | 6.50 | 0.12 | M10 x 16 | 3.54 | 3.78 |
| SK 9042.1 VZ<br>SK 9043.1 VZ | 9.84 | 7.087 | 8.46 | 0.28 | M12 x 20 | 4.72 | 4.92 |
| SK 9052.1 VZ<br>SK 9053.1 VZ | 11.81 | 9.055 | 10.43 | 0.16 | M12 x 20 | 5.51 | 5.75 |
| SK 9072.1 VZ<br>SK 9072.1/32 VZ<br>SK 9072.1/42 VZ | 13.78 | 9.843 | 11.81 | 0.20 | M16 x 25 | 6.69 | 6.97 |
| SK 9082.1 VZ<br>SK 9082.1/42 VZ<br>SK 9082.1/52 VZ | 15.75 | 11.811 | 13.78 | 0.28 | M16 x 25 | 8.27 | 8.58 |
| SK 9086.1 VZ<br>SK 9086.1/52 VZ | 17.72 | 13.780 | 15.75 | 0.28 | M20 x 30 | 8.27 | 8.58 |
| SK 9092.1 VZ<br>SK 9092.1/52 VZ | 17.72 | 13.780 | 15.75 | 0.28 | M20 x 30 | 9.84 | 10.24 |
| SK 9096.1 VZ<br>SK 9096.1/62 VZ<br>SK 9096.1/63 VZ | 21.65 | 17.717 | 19.69 | 0.26 | M24 x 30 | 12.60 | 13.01 |


Send Quote Requests to info@automatedpt.com
Call +1(800)985-6929 To Order or Order Online At Nordgearmotors.com

DRIVESYSTEMS





# B14 Flange Foot Mounted Option VXZ

## SK ... VXZ

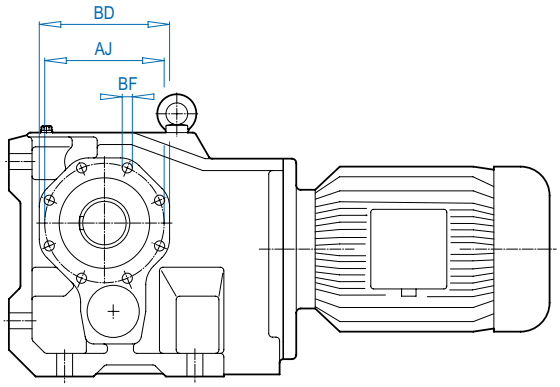


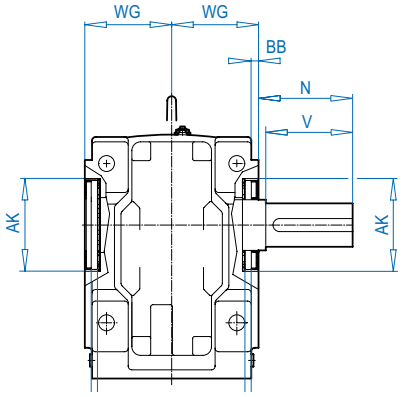


## SK ... AXZ

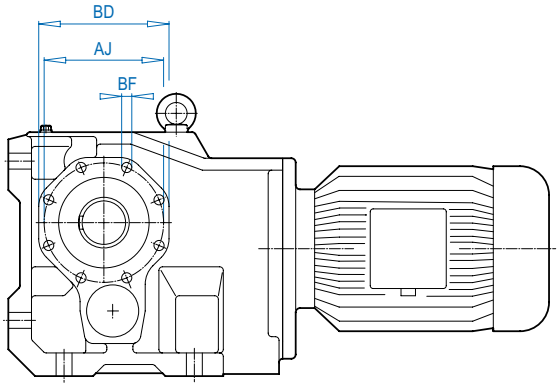


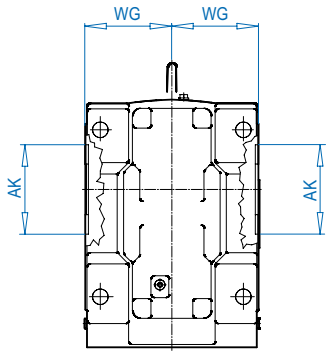


Dimensions in Inches
DIMENSIONS

| Type | Mounting dimensions flange B14 | | | | | Outline dimensions | | |
|---|---|---|---|---|---|---|---|---|
| | BD | AK | AJ | BB | BF(mm) | WG | V | N |
| SK 9012.1 VXZ/AXZ<br>SK 9013.1 VXZ/AXZ | 4.33 | 2.953 | 3.94 | 0.16 | M8 x 13 | 2.80 | 2.36 | 2.52 |
| SK 9016.1 VXZ/AXZ<br>SK 9017.1 VXZ/AXZ | 4.33 | 2.953 | 3.94 | 0.16 | M8 x 13 | 2.80 | 2.76 | 2.91 |
| SK 9022.1 VXZ/AXZ<br>SK 9023.1 VXZ/AXZ | 4.92 | 3.543 | 4.53 | 0.16 | M8 x 13 | 3.39 | 2.76 | 2.91 |
| SK 9032.1 VXZ/AXZ<br>SK 9033.1 VXZ/AXZ | 5.91 | 3.937 | 5.12 | 0.20 | M10 x 16 | 3.94 | 3.54 | 3.78 |
| SK 9042.1 VXZ/AXZ<br>SK 9043.1 VXZ/AXZ | 7.09 | 4.921 | 6.50 | 0.20 | M12 x 20 | 4.53 | 4.72 | 4.92 |
| SK 9052.1 VXZ/AXZ<br>SK 9053.1 VXZ/AXZ | 8.66 | 5.906 | 7.64 | 0.20 | M12 x 20 | 5.71 | 5.51 | 5.75 |
| SK 9072.1 VXZ/AXZ<br>SK 9072.1/32 VXZ/AXZ<br>SK 9072.1/42 VXZ/AXZ | 9.84 | 7.087 | 8.46 | 0.20 | M12 x 20 | 6.69 | 6.69 | 6.97 |
| SK 9082.1 VXZ/AXZ<br>SK 9082.1/42 VXZ/AXZ<br>SK 9082.1/52 VXZ/AXZ | 11.81 | 9.055 | 10.43 | 0.20 | M12 x 20 | 7.87 | 8.27 | 8.58 |
| SK 9086.1 VXZ/AXZ<br>SK 9086.1/52 VXZ/AXZ | 13.78 | 9.843 | 11.81 | 0.20 | M16 x 25 | 9.37 | 8.27 | 8.62 |
| SK 9092.1 VXZ/AXZ<br>SK 9092.1/52 VXZ/AXZ | 15.75 | 11.417 | 13.78 | 0.20 | M20 x 30 | 11.61 | 9.84 | 10.24 |
| SK 9096.1 VXZ/AXZ<br>SK 9096.1/62 VXZ/AXZ<br>SK 9096.1/63 VXZ/AXZ | 17.72 | 12.205 | 15.75 | 0.20 | M20 x 30 | 12.85 | 12.60 | 13.01 |

ALTERNATE SHAFTS SEE PAGES 566 - 573


Send Quote Requests to info@automatedpt.com
Call +1(800)985-6929 To Order or Order Online At Nordgearmotors.com

Send Quote Requests to info@automatedpt.com
Call +1(800)985-6929 To Order or Order Online At Nordgearmotors.com

# B5 Flange Foot Mounted Option VXF





## SK ... VXF

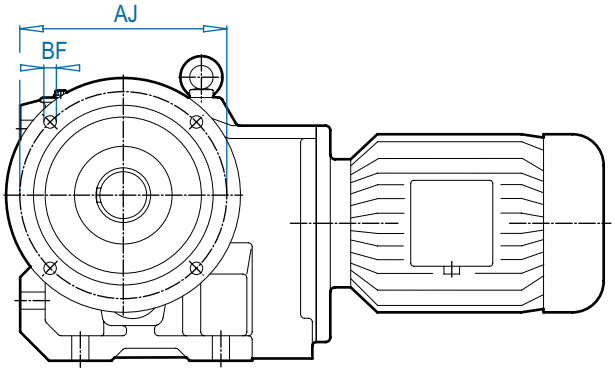


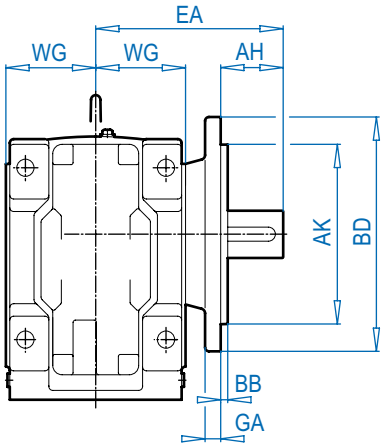


DIMENSIONS
Dimensions in Inches
ALTERNATE SHAFTS SEE PAGES 566 - 573

| Type | Mounting dimensions flange B5 | | | | | | Outline dimensions | | |
|---|---|---|---|---|---|---|---|---|---|
| | BD | AK | AJ | BB | BF | GA | AH | WG | EA |
| SK 9012.1 VXF<br>SK 9013.1 VXF | 6.30 | 4.331 | 5.12 | 0.14 | 0.35 | 0.47 | 1.34 | 2.80 | 5.32 |
| SK 9016.1 VXF<br>SK 9017.1 VXF | 6.30 | 4.331 | 5.12 | 0.14 | 0.35 | 0.47 | 1.73<br>1.34 | 2.80 | 5.71<br>5.32 |
| SK 9022.1 VXF<br>SK 9023.1 VXF | 7.87 | 5.118 | 6.50 | 0.14 | 0.43 | 0.47 | 1.54 | 3.39 | 6.30 |
| SK 9032.1 VXF<br>SK 9033.1 VXF | 9.84 | 7.087 | 8.46 | 0.16 | 0.53 | 0.63 | 2.21 | 3.94 | 7.72 |
| SK 9042.1 VXF<br>SK 9043.1 VXF | 11.81 | 9.055 | 10.43 | 0.16 | 0.69 | 0.79 | 3.15 | 4.53 | 9.45 |
| SK 9052.1 VXF<br>SK 9053.1 VXF | 13.78 | 9.843 | 11.81 | 0.20 | 0.69 | 0.79 | 3.39 | 5.71 | 11.46 |
| SK 9072.1 VXF<br>SK 9072.1/32 VXF<br>SK 9072.1/42 VXF | 15.75 | 11.811 | 13.78 | 0.20 | 0.71 | 0.79 | 4.41 | 6.69 | 13.66 |


Send Quote Requests to info@automatedpt.com
Call +1(800)985-6929 To Order or Order Online At Nordgearmotors.com

DRIVESYSTEMS



# Output Shaft Protection Covers Option AXH / AZH

## SK ... AXZH

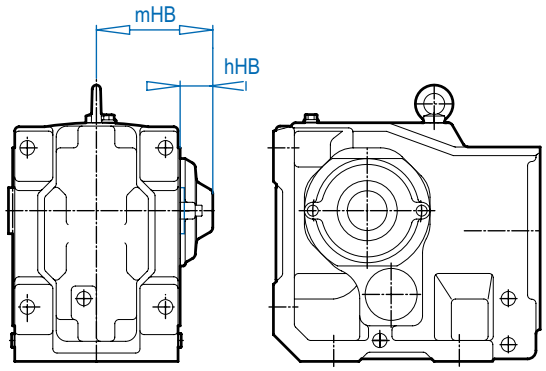


## SK ... AZH

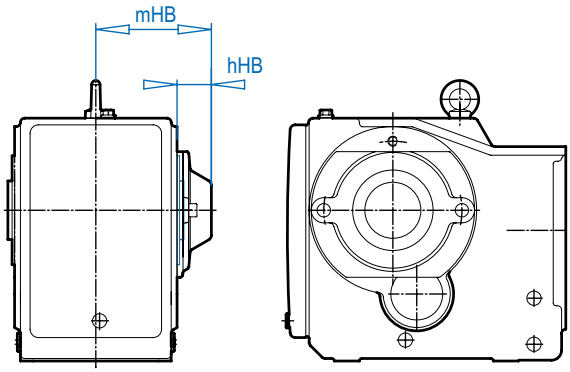


## SK ... AZH66
## SK ... AXH66

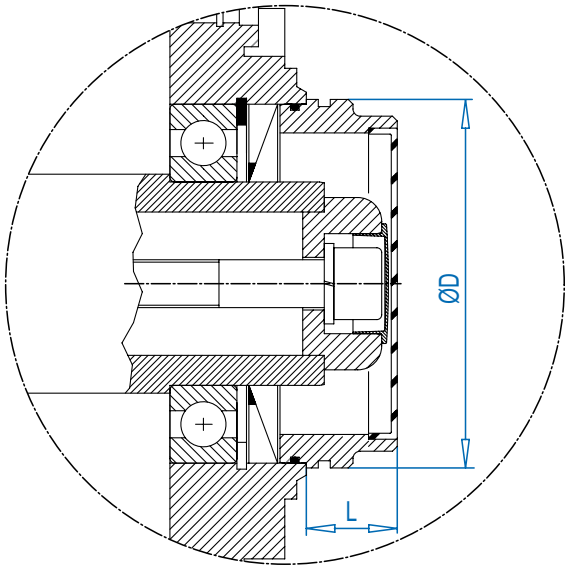


Dimensions in Inches
DIMENSIONS

**Type**

| | hHB | mHB |
|---|---|---|
| SK 92072 AZH | 1.34 | 3.41 |
| SK 92172 AZH | 1.46 | 3.90 |
| SK 92372 AZH | 1.65 | 4.61 |
| SK 92672 AZH | 1.65 | 4.72 |
| SK 9012.1 AXZH | 1.46 | 4.25 |
| SK 9012.1 AZH | 1.65 | 4.33 |
| SK 9013.1 AXZH | 1.46 | 4.25 |
| SK 9013.1 AZH | 1.65 | 4.33 |
| SK 9016.1 AXZH | 1.46 | 4.25 |
| SK 9016.1 AZH | 1.65 | 4.33 |
| SK 9017.1 AXZH | 1.46 | 4.25 |
| SK 9017.1 AZH | 1.65 | 4.33 |
| SK 92772 AXZH | - | - |
| SK 92772 AZH | 1.73 | 5.16 |
| SK 9022.1 AXZH | 1.65 | 5.04 |
| SK 9022.1 AZH | 1.73 | 4.96 |
| SK 9023.1 AXZH | 1.65 | 5.04 |
| SK 9023.1 AZH | 1.73 | 4.96 |
| SK 9032.1 AXZH | 1.73 | 5.67 |
| SK 9032.1 AZH | 1.85 | 5.67 |
| SK 9033.1 AXZH | 1.73 | 5.67 |
| SK 9033.1 AZH | 1.85 | 5.67 |
| SK 9042.1 AXZH | 1.77 | 6.30 |
| SK 9042.1 AZH | 2.17 | 6.42 |
| SK 9043.1 AXZH | 1.77 | 6.30 |
| SK 9043.1 AZH | 2.17 | 6.42 |
| SK 9052.1 AXZH | 1.85 | 7.56 |
| SK 9052.1 AZH | 2.36 | 7.91 |
| SK 9053.1 AXZH | 1.85 | 7.56 |
| SK 9053.1 AZH | 2.36 | 7.91 |
| SK 9072.1 AXZH | 2.09 | 8.78 |
| SK 9072.1 AZH | 2.44 | 8.94 |
| SK 9082.1 AXZH | 2.36 | 10.24 |
| SK 9082.1 AZH | 2.56 | 10.24 |
| SK 9086.1 AXZH | 2.09 | 11.46 |
| SK 9086.1 AZH | 3.31 | 12.56 |

**Type**

| | | ØD | L |
|---|---|---|---|
| SK 9012.1 AXH66 | SK 9013.1 AXH66 | 3.15 | 0.98 |
| SK 9012.1 AZH66 | SK 9013.1 AZH66 | 3.35 | 1.10 |
| SK 9016.1 AXH66 | SK 9017.1 AXH66 | 3.15 | 0.98 |
| SK 9016.1 AZH66 | SK 9017.1 AZH66 | 3.35 | 1.10 |
| SK 9022.1 AXH66 | SK 9023.1 AXH66 | 3.74 | 1.18 |
| SK 9022.1 AZH66 | SK 9023.1 AZH66 | 4.09 | 1.34 |
| SK 9032.1 AXH66 | SK 9033.1 AXH66 | 4.09 | 1.34 |
| SK 9032.1 AZH66 | SK 9033.1 AZH66 | 4.53 | 1.38 |
| SK 9042.1 AXH66 | SK 9043.1 AXH66 | 4.09 | 1.38 |
| SK 9042.1 AZH66 | SK 9043.1 AZH66 | 5.71 | 1.50 |
| SK 9052.1 AXH66 | SK 9053.1 AXH66 | 6.14 | 1.50 |
| SK 9052.1 AZH66 | SK 9053.1 AZH66 | 7.40 | 1.73 |
| SK 9072.1 AXH66 | | 7.40 | 1.73 |
| SK 9072.1 AZH66 | | 7.40 | 1.73 |
| SK 9082.1 AXH66 | | 9.65 | 1.97 |
| SK 9082.1 AZH66 | | 10.24 | 2.13 |
| SK 9086.1 AXH66 | | 10.24 | 2.13 |
| SK 9086.1 AZH66 | | 12.40 | 1.97 |


Send Quote Requests to info@automatedpt.com
Call +1(800)985-6929 To Order or Order Online At Nordgearmotors.com

# Agitator Design Option VL 2 & VL 3 with Hollow Shaft




NORD DRIVESYSTEMS

## SK ... AFVL2
## SK ... AFVL3



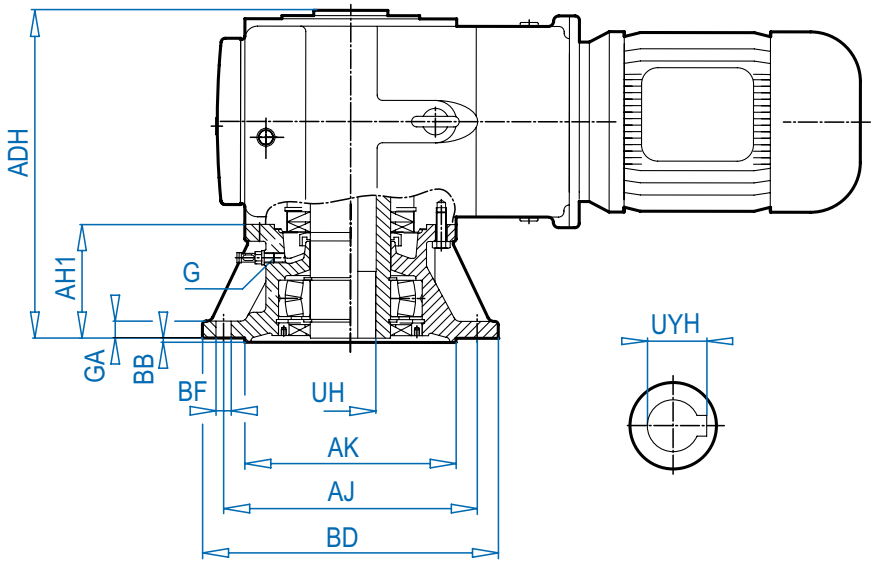


Hollow Shaft

| Type | Outline dimensions | | | | | | | | Shaft dimensions | | |
|---|---|---|---|---|---|---|---|---|---|---|---|
| | BD | AK | GA | AJ | BB | AH1 | BF | G(mm) | UH | UYH | ADH |
| SK 9012.1 AF..<br>SK 9013.1 AF.. | 7.87 | 5.118 | 0.47 | 6.50 | 0.14 | 2.95 | 0.43 | M12 x 1.5 | 1.375 | 1.52 | 8.58 |
| SK 9016.1 AF..<br>SK 9017.1 AF.. | 7.87 | 5.118 | 0.47 | 6.50 | 0.14 | 2.95 | 0.43 | M12 x 1.5 | 1.500 | 1.67 | 8.58 |
| SK 9022.1 AF..<br>SK 9023.1 AF.. | 9.84 | 7.087 | 0.63 | 8.46 | 0.16 | 3.39 | 0.55 | M12 x 1.5 | 1.500 | 1.67 | 10.47 |
| SK 9032.1 AF..<br>SK 9033.1 AF.. | 11.81 | 9.055 | 0.79 | 10.43 | 0.16 | 3.35 | 0.55 | M12 x 1.5 | 2.000 | 2.22 | 11.42 |
| SK 9042.1 AF..<br>SK 9043.1 AF.. | 13.78 | 9.843 | 0.79 | 11.81 | 0.20 | 5.32 | 0.71 | M24 x 1.5 | 2.375 | 2.55 | 14.25 |
| SK 9052.1 AF..<br>SK 9053.1 AF.. | 15.75 | 11.811 | 0.87 | 13.78 | 0.20 | 6.54 | 0.71 | M24 x 1.5 | 2.750 | 3.04 | 17.99 |
| SK 9072.1 AF..<br>SK 9072.1/32 AF..<br>SK 9072.1/42 AF.. | 17.72 | 13.780 | 0.94 | 15.75 | 0.20 | 7.24 | 0.71 | M24 x 1.5 | 3.250 | 3.59 | 20.63 |
| SK 9082.1 AF..<br>SK 9082.1/42 AF..<br>SK 9082.1/52 AF.. | 21.65 | 17.717 | 1.10 | 19.69 | 0.20 | 8.27 | 0.71 | M30 x 2 | 4.000 | 4.44 | 24.21 |
| SK 9086.1 AF..<br>SK 9086.1/52 AF.. | 25.98 | 21.654 | 1.26 | 23.62 | 0.24 | 10.32 | 0.87 | M30 x 2 | 4.750 | 5.30 | 29.37 |


Send Quote Requests to info@automatedpt.com
Call +1(800)985-6929 To Order or Order Online At Nordgearmotors.com

DRIVESYSTEMS





# Agitator Design Option VL 2 & VL 3 with Solid Shaft

## SK ... VFVL2
## SK ... VFVL3

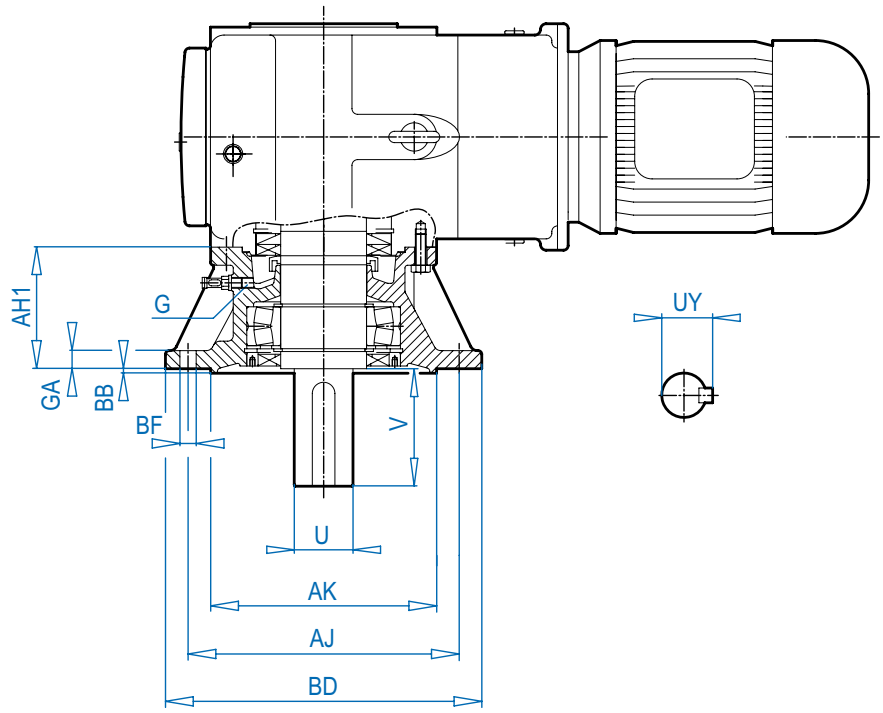


Solid Shaft

DIMENSIONS
Dimensions in Inches

| Type | Outline dimensions | | | | | | | | Shaft dimensions | | |
|---|---|---|---|---|---|---|---|---|---|---|---|
| | BD | AK | GA | AJ | BB | AH1 | BF | G(mm) | U | V | UY |
| SK 9012.1 AF..<br>SK 9013.1 AF.. | 7.87 | 5.118 | 0.47 | 6.50 | 0.14 | 2.95 | 0.43 | M12 x 1.5 | 1.250 | 2.36 | 1.36 |
| SK 9016.1 AF..<br>SK 9017.1 AF.. | 7.87 | 5.118 | 0.47 | 6.50 | 0.14 | 2.95 | 0.43 | M12 x 1.5 | 1.375 | 2.76 | 1.51 |
| SK 9022.1 AF..<br>SK 9023.1 AF.. | 9.84 | 7.087 | 0.63 | 8.46 | 0.16 | 3.39 | 0.55 | M12 x 1.5 | 1.375 | 2.76 | 1.51 |
| SK 9032.1 AF..<br>SK 9033.1 AF.. | 11.81 | 9.055 | 0.79 | 10.43 | 0.16 | 3.35 | 0.55 | M12 x 1.5 | 1.750 | 3.54 | 1.92 |
| SK 9042.1 AF..<br>SK 9043.1 AF.. | 13.78 | 9.843 | 0.79 | 11.81 | 0.20 | 5.32 | 0.71 | M24 x 1.5 | 2.375 | 4.72 | 2.65 |
| SK 9052.1 AF..<br>SK 9053.1 AF.. | 15.75 | 11.811 | 0.87 | 13.78 | 0.20 | 6.54 | 0.71 | M24 x 1.5 | 2.875 | 5.51 | 3.20 |
| SK 9072.1 AF..<br>SK 9072.1/32 AF..<br>SK 9072.1/42 AF.. | 17.72 | 13.780 | 0.94 | 15.75 | 0.20 | 7.24 | 0.71 | M24 x 1.5 | 3.625 | 6.69 | 4.01 |
| SK 9082.1 AF..<br>SK 9082.1/42 AF..<br>SK 9082.1/52 AF.. | 21.65 | 17.717 | 1.10 | 19.69 | 0.20 | 8.27 | 0.71 | M30 x 2 | 4.375 | 8.27 | 4.82 |
| SK 9086.1 AF..<br>SK 9086.1/52 AF.. | 25.98 | 21.654 | 1.26 | 23.62 | 0.24 | 10.32 | 0.87 | M30 x 2 | 4.750 | 8.27 | 5.30 |
| SK 9092.1 AF..<br>SK 9092.1/52 AF.. | 25.98 | 21.654 | 1.26 | 23.62 | 0.24 | 10.32 | 0.87 | M30 x 2 | 5.500 | 9.84 | 6.06 |
| SK 9096.1 AF..<br>SK 9096.1/62 AF..<br>SK 9096.1/63 AF.. | 25.98 | 21.654 | 1.38 | 23.62 | 0.32 | 11.89 | 1.02 | M30 x 2 | 7.500 | 12.60 | 8.27 |


Send Quote Requests to info@automatedpt.com
Call +1(800)985-6929 To Order or Order Online At Nordgearmotors.com

# Agitator Design Option VL 2 & VL 3 with Shrink Disc




## SK ... AFSHVL2
## SK ... AFSHVL3

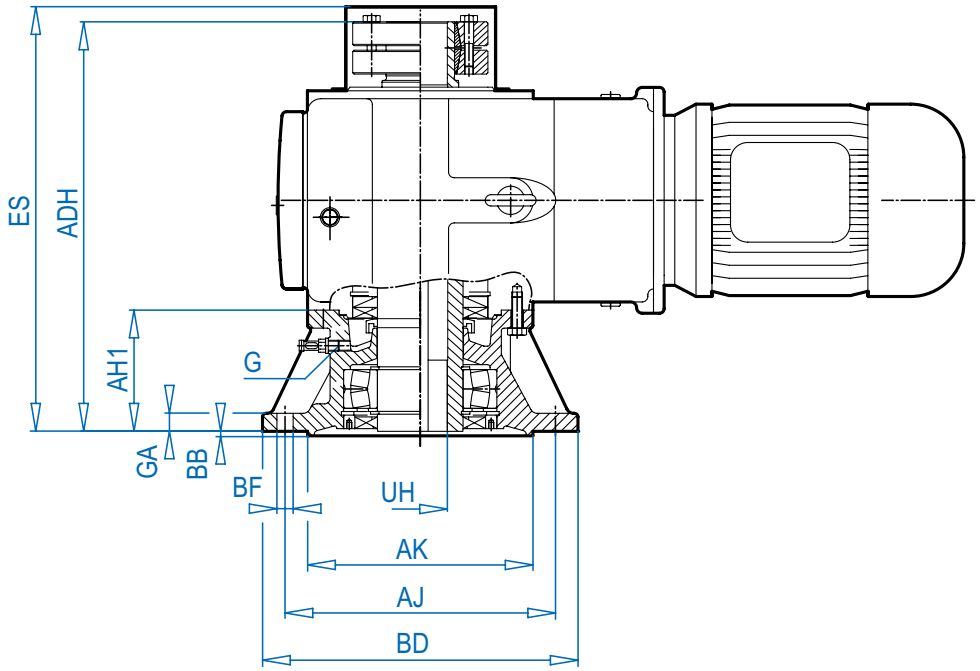


Shrink Disc

| Type | Outline dimensions | | | | | | | | Shaft dimensions | | |
|---|---|---|---|---|---|---|---|---|---|---|---|
| | BD | AK | GA | AJ | BB | AH1 | BF | G(mm) | ES | UH | ADH |
| SK 9012.1 AFSH..<br>SK 9013.1 AFSH.. | 7.87 | 5.118 | 0.47 | 6.50 | 0.14 | 2.95 | 0.43 | M12 x 1.5 | 10.95 | 1.375 | 10.35 |
| SK 9016.1 AFSH..<br>SK 9017.1 AFSH.. | 7.87 | 5.118 | 0.47 | 6.50 | 0.14 | 2.95 | 0.43 | M12 x 1.5 | 12.56 | 1.500 | 10.35 |
| SK 9022.1 AFSH..<br>SK 9023.1 AF.. | 9.84 | 7.087 | 0.63 | 8.46 | 0.16 | 3.39 | 0.55 | M12 x 1.5 | 13.98 | 1.500 | 12.44 |
| SK 9032.1 AFSH..<br>SK 9033.1 AFSH.. | 11.81 | 9.055 | 0.79 | 10.43 | 0.16 | 3.35 | 0.55 | M12 x 1.5 | 17.56 | 2.000 | 14.02 |
| SK 9042.1 AFSH..<br>SK 9043.1 AFSH.. | 13.78 | 9.843 | 0.79 | 11.81 | 0.20 | 5.32 | 0.71 | M24 x 1.5 | 21.97 | 2.375 | 16.81 |
| SK 9052.1 AFSH..<br>SK 9053.1 AFSH.. | 15.75 | 11.811 | 0.87 | 13.78 | 0.20 | 6.54 | 0.71 | M24 x 1.5 | 24.76 | 2.750 | 21.10 |
| SK 9072.1 AFSH..<br>SK 9072.1/32 AF.SH.<br>SK 9072.1/42 AFSH.. | 17.72 | 13.780 | 0.94 | 15.75 | 0.20 | 7.24 | 0.71 | M24 x 1.5 | 28.90 | 3.250 | 23.98 |
| SK 9082.1 AFSH..<br>SK 9082.1/42 AFSH..<br>SK 9082.1/52 AFSH.. | 21.65 | 17.717 | 1.10 | 19.69 | 0.20 | 8.27 | 0.71 | M30 x 2 | 35.12 | 4.000 | 27.76 |
| SK 9086.1 AFSH..<br>SK 9086.1/52 AFSH.. | 25.98 | 21.654 | 1.26 | 23.62 | 0.24 | 10.32 | 0.87 | M30 x 2 | 39.29 | 4.750 | 33.50 |
| SK 9092.1 AFSH..<br>SK 9092.1/52 AFSH.. | 25.98 | 21.654 | 1.26 | 23.62 | 0.24 | 10.32 | 0.87 | M30 x 2 | 44.65 | 5.500 | 37.60 |


Send Quote Requests to info@automatedpt.com
Call +1(800)985-6929 To Order or Order Online At Nordgearmotors.com

DRIVESYSTEMS





# Hollow Shaft Design
# Tapped holes
# Option A..

## SK ... A

SK 9012.1 - SK 9052.1

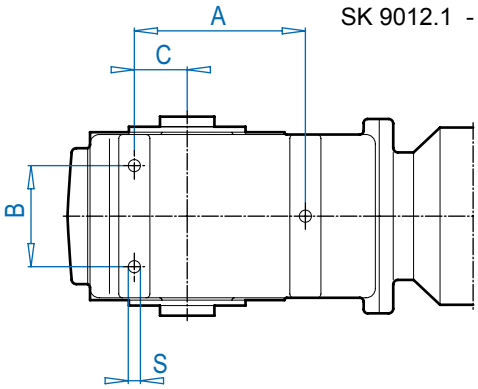


SK 9072.1 - SK 9096.1

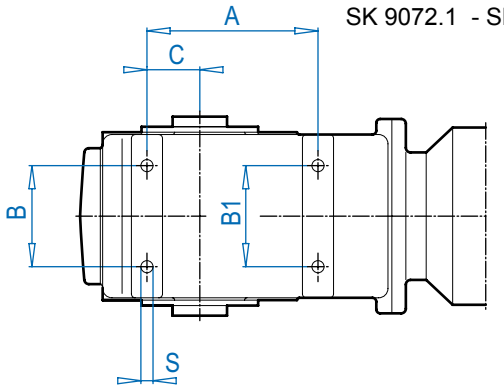


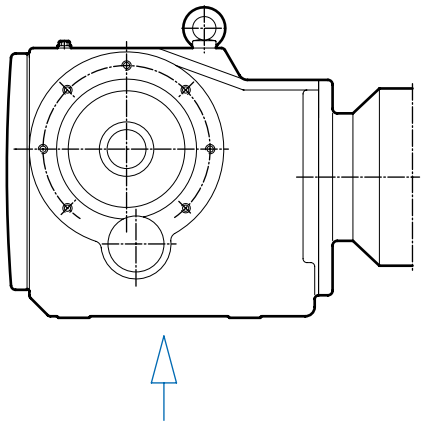

**Type** **Mounting dimensions**

| | A | B | B1 | C | S(mm) |
|---|---|---|---|---|---|
| **SK 9012.1 A..**<br>**SK 9013.1 A..** | 5.98 | 2.36 | NA | 1.81 | M10 x 16 |
| **SK 9016.1 A..**<br>**SK 9017.1 A..** | 5.98 | 2.36 | NA | 1.81 | M10 x 16 |
| **SK 9022.1 A..**<br>**SK 9023.1 A..** | 5.98 | 3.94 | NA | 1.65 | M12 x 20 |
| **SK 9032.1 A..**<br>**SK 9033.1 A..** | 7.48 | 4.33 | NA | 2.17 | M12 x 20 |
| **SK 9042.1 A..**<br>**SK 9043.1 A..** | 8.66 | 5.12 | NA | 2.68 | M16 x 25 |
| **SK 9052.1 A..**<br>**SK 9053.1 A..** | 10.91 | 7.28 | NA | 3.62 | M16 x 25 |
| **SK 9072.1 A..**<br>**SK 9072.1/32 A..**<br>**SK 9072.1/42 A..** | 11.42 | 7.48 | 7.48 | 3.94 | M24 x 36 |
| **SK 9082.1 A..**<br>**SK 9082.1/42 A..**<br>**SK 9082.1/52 A..** | 16.93 | 10.24 | 10.24 | 5.51 | M24 x 36 |
| **SK 9086.1 A..**<br>**SK 9086.1/52 A..** | 16.93 | 12.60 | 12.60 | 6.30 | M36 x 58 |
| **SK 9092.1 A..**<br>**SK 9092.1/52 A..** | 20.47 | 15.75 | 15.75 | 7.09 | M36 x 58 |
| **SK 9096.1 A..**<br>**SK 9096.1/62 A..**<br>**SK 9096.1/63 A..** | 22.83 | 17.32 | 17.32 | 8.66 | M42 x 71 |


Send Quote Requests to info@automatedpt.com
Call +1(800)985-6929 To Order or Order Online At Nordgearmotors.com

Send Quote Requests to info@automatedpt.com
Call +1(800)985-6929 To Order or Order Online At Nordgearmotors.com

# Solid Shaft Dimensions

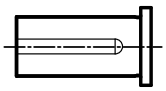

DRIVESYSTEMS

## Solid Shaft Dimensions (VF/VZ)

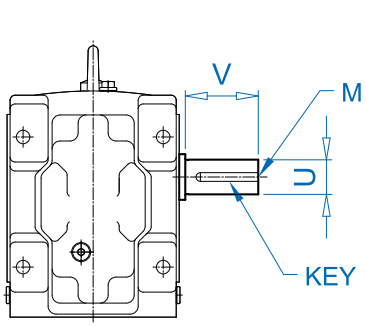


FOOTED

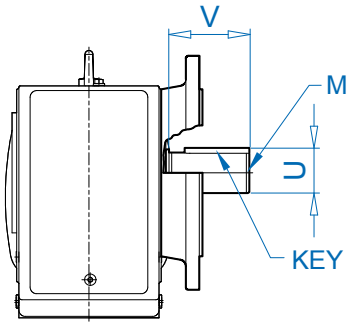


VF

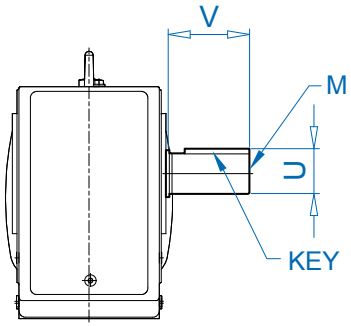


VZ

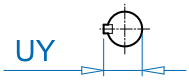


DIMENSIONS — Dimensions in Inches

| UNIT | U | Diameter Tolerance | V | UY | KEY SIZE | KEY QTY | DRILL & TAP M |
|---|---|---|---|---|---|---|---|
| **SK 92072** | 0.750 | +0.0000 / -0.0005 | 1.50 | 0.83 | 3/16 x 3/16 x 1-1/4 | 1 | 1/4-20 |
| | 20mm | +0.015 / +0.002mm | 40mm | 22.5mm | 6 x 6 x 32mm | 1 | M6 |
| **SK 92172** | 0.750 | +0.0000 / -0.0005 | 1.50 | 0.83 | 3/16 x 3/16 x 1 | 1 | 1/4-20 |
| | 20mm | +0.015 / +0.002mm | 40mm | 22.5mm | 6 x 6 x 32mm | 1 | M6 |
| **SK 92372** | 1.000 | +0.0000 / -0.0005 | 2.13 | 1.11 | 1/4 x 1/4 x 1-5/8 | 1 | 3/8-16 |
| | 25mm | +0.015 / +0.002mm | 50mm | 28.0mm | 8 x 7 x 40mm | 1 | M10 |
| **SK 92672** | 1.250 | +0.0000 / -0.0005 | 2.75 | 1.36 | 1/4 x 1/4 x 2-1/4 | 1 | 1/2-13 |
| | 30mm | +0.015 / +0.002mm | 60mm | 33.0mm | 8 x 7 x 50mm | 1 | M10 |
| **SK 92772** | 1.375 | +0.0000 / -0.0005 | 3.00 | 1.51 | 5/16 x 5/16 x 2-1/2 | 1 | 5/8-11 |
| | 35mm | -0.018 / +0.002mm | 70mm | 38.0mm | 10 x 8 x 56mm | 1 | M12 |
| **SK 9012.1** | 1.250 | +0.0000 / -0.0005 | 2.36 | 1.36 | 1/4 x 1/4 x 2 | 1 | 1/2-13 |
| **SK 9013.1** | 30mm | +0.015 / +0.002mm | 60mm | 33.0mm | 8 x 7 x 50mm | 1 | M10 |
| **SK 9016.1** | 1.375 | +0.0000 / -0.0005 | 2.76 | 1.52 | 5/16 x 5/16 x 2-1/8 | 1 | 5/8-11 |
| **SK 9017.1** | 35mm | -0.018 / +0.002mm | 70mm | 38.0mm | 10 x 8 x 56mm | 1 | M12 |
| **SK 9022.1** | 1.375 | +0.0000 / -0.0005 | 2.76 | 1.52 | 5/16 x 5/16 x 2-1/8 | 1 | 5/8-11 |
| **SK 9023.1** | 35mm | -0.018 / +0.002mm | 70mm | 38.0mm | 10 x 8 x 56mm | 1 | M12 |
| **SK 9032.1** | 1.750 | +0.0000 / -0.0005 | 3.54 | 1.92 | 3/8 x 3/8 x 2-3/4 | 1 | 5/8-11 |
| **SK 9033.1** | 45mm | -0.018 / +0.002mm | 90mm | 48.5mm | 14 x 9 x 80mm | 1 | M16 |
| **SK 9042.1** | 2.375 | +0.0000 / -0.0010 | 4.72 | 2.65 | 5/8 x 5/8 x 3-1/4 | 1 | 3/4-10 |
| **SK 9043.1** | 60mm | +0.030 / +0.011mm | 120mm | 64.0mm | 18 x 11 x 100mm | 1 | M20 |
| **SK 9052.1** | 2.875 | +0.0000 / -0.0010 | 5.51 | 3.20 | 3/4 x 3/4 x 4-1/2 | 1 | 3/4-10 |
| **SK 9053.1** | 70mm | +0.030 / +0.011mm | 140mm | 74.5mm | 20 x 12 x 110mm | 1 | M20 |
| **SK 9072.1** | 3.625 | +0.0000 / -0.0010 | 6.69 | 4.01 | 7/8 x 7/8 x 5-1/2 | 1 | 1-8 |
| **SK 9073.1** | 90mm | +0.035 / +0.013mm | 170mm | 95.0mm | 25 x 14 x 140mm | 1 | M24 |
| **SK 9082.1** | 4.375 | +0.0000 / -0.0010 | 8.27 | 4.82 | 1 x 1 x 7-1/4 | 1 | 1-8 |
| | 110mm | +0.035 / +0.013mm | 210mm | 116mm | 28 x 16 x 180mm | 1 | M24 |
| **SK 9086.1** | 4.750 | +0.0000 / -0.0010 | 8.27 | 5.30 | 1-1/4 x 1-1/4 x 7-1/4 | 1 | 1-8 |
| | 120mm | +0.035 / +0.013mm | 210mm | 127mm | 32 x 18 x 180mm | 1 | M24 |
| **SK 9092.1** | 5.500 | +0.0000 / -0.0010 | 9.84 | 6.06 | 1-1/4 x 1-1/4 x 8-3/8 | 1 | 1-8 |
| | 140mm | +0.040 / +0.015mm | 250mm | 148mm | 36 x 20 x 220mm | 1 | M24 |
| **SK 9096.1** | 7.500 | +0.0000 / -0.0010 | 12.60 | 7.87 | 1-1/4 x 1-1/4 x 10 | 1 | 1 1/4 - 7 x 3.15 |
| | 190mm | +0.046 / +0.017mm | 320mm | 200mm | 36 x 20 x 220mm | 1 | M30 |

- Dimensions are in inches unless otherwise noted.
- Metric Keys are captured in keyways.
- For shaft sizes not shown, consult NORD.


Send Quote Requests to info@automatedpt.com
Call +1(800)985-6929 To Order or Order Online At Nordgearmotors.com

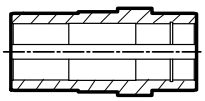



## Hollow Shaft Dimensions (AZ-AF)

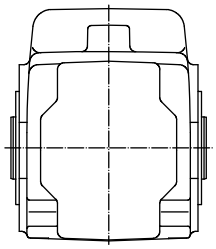

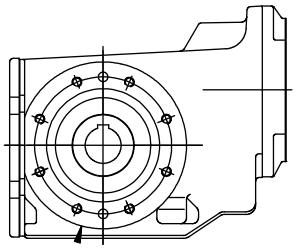

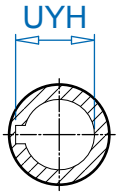


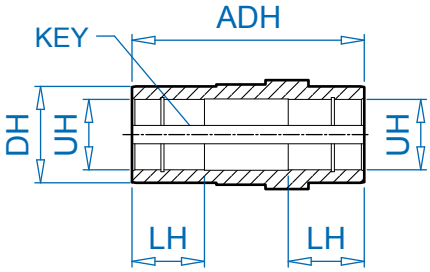


| TYPE | UH | DIAMETER TOLERANCE | ADH | LH | DH | UYH | KEY SIZE w x h x l | KEY QTY |
|---|---|---|---|---|---|---|---|---|
| **SK 92072 AZ/AF** | 0.750* | +0.0010 / -0.0000 | 4.57 | 0.98 | 1.38 | 0.84 | 3/16 x 3/16 x 2 | 2 |
| | 0.500 | +0.0010 / -0.0000 | 4.57 | 0.98 | 1.38 | 0.56 | 1/8 x 1/8 x 7/8 | 2 |
| | 25mm | +0.021 / -0.000mm | 116mm | 30mm | 35mm | 28.3mm | 8 x7 x 25mm | 2 |
| **SK 92172 AZ/AF** | 1.000* | +0.0010 / -0.0000 | 5.43 | 1.18 | 1.57 | 1.09 | 1/4 x 3/16 x 2 | 2 |
| | 25mm | +0.021 / -0.000mm | 138mm | 30mm | 40mm | 28.3mm | 8 x7 x 32mm | 2 |
| **SK 92372 AZ/AF** | 1.1875* | +0.0010 / -0.0000 | 6.46 | 1.97 | 1.97 | 1.30 | 1/4 x 1/4 x 2-1/4 | 2 |
| | 1.250 | +0.0010 / -0.0000 | 6.46 | 1.97 | 1.97 | 1.37 | 1/4 x 1/4 x 2-1/4 | 2 |
| | 1.4375 | +0.0010 / -0.0000 | 6.46 | 1.97 | 1.97 | 1.61 | 3/8 x 3/8 x 2-1/2 | 2 |
| | 30mm | +0.021 / -0.000mm | 164mm | 50mm | 50mm | 33.3mm | 8 x 7 x 60mm | 2 |
| **SK 92672 AZ/AF** | 1.375* | +0.0010 / -0.0000 | 6.69 | 2.36 | 2.17 | 1.52 | 5/16 x 5/16 x 2-1/2 | 2 |
| | 1.4375 | +0.0010 / -0.0000 | 6.69 | 2.36 | 2.17 | 1.61 | 3/8 x 3/8 x 2-1/2 | 2 |
| | 1.500 | +0.0010 / -0.0000 | 6.69 | 2.36 | 2.17 | 1.67 | 3/8 x 3/8 x 2-1/2 | 2 |
| | 35mm | +0.025 / -0.000mm | 170mm | 55mm | 60mm | 38.3mm | 10 x 8 x 60mm | 2 |
| **SK 92772 AZ/AF** | 1.500* | +0.0010 / -0.0000 | 7.56 | 2.36 | 2.17 | 1.67 | 3/8 x 3/8 x 2-1/4 | 2 |
| | 1.4375 | +0.0010 / -0.0000 | 7.56 | 2.36 | 2.17 | 1.61 | 3/8 x 3/8 x 2-1/4 | 2 |
| | 40mm | +0.025 / -0.000mm | 192mm | 60mm | 55mm | 43.3mm | 12 x 8 x 60mm | 2 |

* standard size

- Dimensions are in inches unless otherwise noted.
- For shaft sizes not shown, consult NORD.




Send Quote Requests to info@automatedpt.com
Call +1(800)985-6929 To Order or Order Online At Nordgearmotors.com

# Hollow Shaft Dimensions

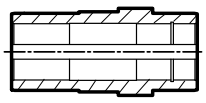

DRIVESYSTEMS

## Hollow Shaft Dimensions (AZ-AF)

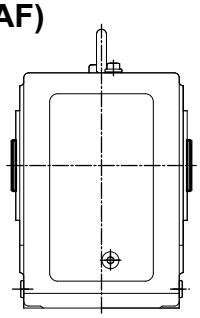

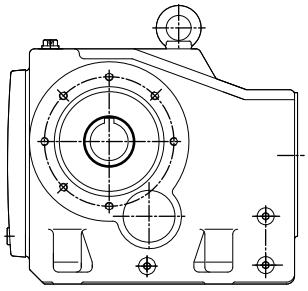

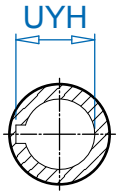


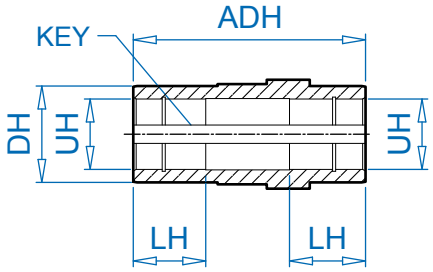


DIMENSIONS — Dimensions in Inches

| TYPE | UH | DIAMETER TOLERANCE | ADH | LH | DH | UYH | KEY SIZE w x h x l | KEY QTY |
|---|---|---|---|---|---|---|---|---|
| **SK 9012.1 AZ/AF** | 1.375* | +0.0010 / -0.0000 | 5.83 | 1.97 | 1.97 | 1.52 | 5/16 x 5/16 x 2 | 2 |
| **SK 9013.1 AZ/AF** | 1.4375 | +0.0010 / -0.0000 | 5.83 | 1.97 | 1.97 | 1.61 | 3/8 x 3/8 x 2 | 2 |
| | 1.250 | +0.0010 / -0.0000 | 5.83 | 1.97 | 1.97 | 1.37 | 1/4 x 1/4 x 2 | 2 |
| | 35mm | +0.025 / -0.000mm | 148mm | 50mm | 50mm | 38.3mm | 10 x 8 x 60mm | 2 |
| **SK 9016.1 AZ/AF** | 1.375 | +0.0010 / -0.0000 | 5.83 | 1.97 | 1.97 | 1.52 | 5/16 x 5/16 x 2 | 2 |
| **SK 9017.1 AZ/AF** | 1.500* | +0.0010 / -0.0000 | 5.83 | 1.97 | 1.97 | 1.61 | 3/8 x 1/4 x 2 | 2 |
| | 1.4375 | +0.0010 / -0.0000 | 5.83 | 1.97 | 1.97 | 1.61 | 3/8 x 3/8 x 2 | 2 |
| | 1.250 | +0.0010 / -0.0000 | 5.83 | 1.97 | 1.97 | 1.37 | 1/4 x 1/4 x 2 | 2 |
| | 35mm | +0.025 / -0.000mm | 148mm | 50mm | 50mm | 38.3mm | 10 x 8 x 60mm | 2 |
| | 40mm | +0.025 / -0.000mm | 148mm | 50mm | 50mm | 42.2mm | 12 x 7 x 60mm | 2 |
| **SK 9022.1 AZ/AF** | 1.500* | +0.0010 / -0.0000 | 7.09 | 2.36 | 2.17 | 1.67 | 3/8 x 3/8 x 2-1/4 | 2 |
| **SK 9023.1 AZ/AF** | 1.4375 | +0.0010 / -0.0000 | 7.09 | 2.36 | 2.17 | 1.61 | 3/8 x 3/8 x 2-1/4 | 2 |
| | 40mm | +0.025 / -0.000mm | 180mm | 60mm | 55mm | 43.3mm | 12 x 8 x 60mm | 2 |
| **SK 9032.1 AZ/AF** | 2.000* | +0.0012 / -0.0000 | 8.27 | 2.76 | 2.76 | 2.22 | 1/2 x 1/2 x 2-3/4 | 2 |
| **SK 9033.1 AZ/AF** | 1.9375 | +0.0012 / -0.0000 | 8.27 | 2.76 | 2.76 | 2.16 | 1/2 x 1/2 x 2-3/4 | 2 |
| | 1.6875 | +0.0012 / -0.0000 | 8.27 | 2.76 | 2.76 | 1.86 | 3/8 x 3/8 x 2-3/4 | 2 |
| | 50mm | +0.025 / -0.000mm | 210mm | 70mm | 70mm | 53.8mm | 14 x 9 x 70mm | 2 |
| **SK 9042.1 AZ/AF** | 2.375* | +0.0012 / -0.0000 | 9.45 | 3.15 | 3.15 | 2.56 | 5/8 x 7/16 x 3 | 2 |
| **SK 9043.1 AZ/AF** | 2.4375 | +0.0012 / -0.0000 | 9.45 | 3.15 | 3.15 | 2.62 | 5/8 x 7/16 x 3 | 2 |
| | 2.1875 | +0.0012 / -0.0000 | 9.45 | 3.15 | 3.15 | 2.41 | 1/2 x 1/2 x 3 | 2 |
| | 60mm | +0.030 / -0.000mm 2 | 40mm | 80mm | 80mm | 64.4mm | 18 x 11 x 80mm | 2 |
| **SK 9052.1 AZ/AF** | 2.750* | +0.0012 / -0.0000 | 11.81 | 3.94 | 3.94 | 3.03 | 5/8 x 5/8 x 4 | 2 |
| **SK 9053.1 AZ/AF** | 2.9375 | +0.0012 / -0.0000 | 11.81 | 3.94 | 3.94 | 3.14 | 3/4 x 1/2 x 4-1/2 | 2 |
| | 70mm | +0.030 / -0.000mm | 300mm | 100mm | 100mm | 74.9mm | 20 x 12 x 100mm | 2 |
| **SK 9072.1 AZ/AF** | 3.250* | +0.0012 / -0.0000 1 | 3.78 | 4.72 | 4.72 | 3.59 | 3/4 x 3/4 x 4-3/4 | 2 |
| | 2.9375 | +0.0012 / -0.0000 | 13.78 | 4.72 | 4.72 | 3.14 | 3/4 x 1/2 x 4-1/2 | 2 |
| | 2.750 | +0.0012 / -0.0000 | 13.78 | 4.72 | 4.72 | 3.03 | 5/8 x 5/8 x 4-1/2 | 2 |
| | 3.4375 | +0.0014 / -0.0000 | 13.78 | 4.72 | 4.72 | 3.82 | 7/8 x 7/8 x 4-3/4 | 2 |
| | 3.625 | +0.0014 / -0.0000 | 13.78 | 4.72 | 4.72 | 4.01 | 7/8 x 7/8 x 4-3/4 | 2 |
| | 80mm | +0.030 / -0.000mm | 350mm | 120mm | 120mm | 85.4mm | 22 x 14 x 110mm | 2 |
| | 90mm | +0.035 / -0.000mm | 350mm | 120mm | 120mm | 95.4mm | 25 x 14 x 140mm | 2 |
| **SK 9082.1 AZ/AF** | 4.000* | +0.0014 / -0.0000 | 16.54 | 5.51 | 5.51 | 4.44 | 1 x 1 x 4-1/2 | 2 |
| | 3.9375 | +0.0014 / -0.0000 | 16.54 | 5.51 | 5.51 | 4.38 | 1 x 1 x 4-1/2 | 2 |
| | 4.4375 | +0.0014 / -0.0000 | 16.54 | 5.51 | 5.51 | 4.76 | 1 x 3/4 x 6 | 2 |
| | 110mm | +0.035 / -0.000mm | 420mm | 140mm | 140mm | 116.4mm | 28 x 16 x 120mm | 2 |
| **SK 9086.1 AZ/AF** | 4.500 | +0.0014 / -0.0000 | 19.69 | 6.30 | 6.30 | 4.95 | 1 x 1 x 6-1/2 | 2 |
| | 4.750* | +0.0014 / -0.0000 | 19.69 | 6.30 | 6.30 | 5.30 | 1-1/4 x 1-1/4 x 6-1/2 | 2 |
| | 120mm | +0.035 / -0.000mm | 500mm | 160mm | 160mm | 127.4mm | 32 x 18 x 150mm | 2 |
| **SK 9092.1 AZ/AF** | 5.500 | +0.0016 / -0.0000 | 24.02 | 6.50 | 7.87 | 6.06 | 1-1/4 x 1-1/4 x 7 | 2 |
| | 150mm | +0.040 / -0.000mm | 610mm | 186mm | 200mm | 158.4mm | 36 x 20 x 180 | 2 |
| **SK 9096.1 AZ/AF** | 6.000 | +0.0016 / -0.0000 | 26.54 | 7.09 | 7.87 | 6.41 | 1-1/2 x 1 x 7 | 2 |
| | 160mm | +0.040 / -0.000mm | 674mm | 180mm | 200mm | 169.4mm | 40 x 22 x 180 | 2 |

* standard size: • Dimensions are in inches unless otherwise noted. • For shaft sizes not shown, consult NORD.


Send Quote Requests to info@automatedpt.com
Call +1(800)985-6929 To Order or Order Online At Nordgearmotors.com

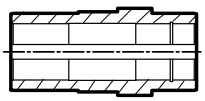

# Hollow Shaft Dimensions

## Hollow Shaft Foot Mount Dimensions (AX)

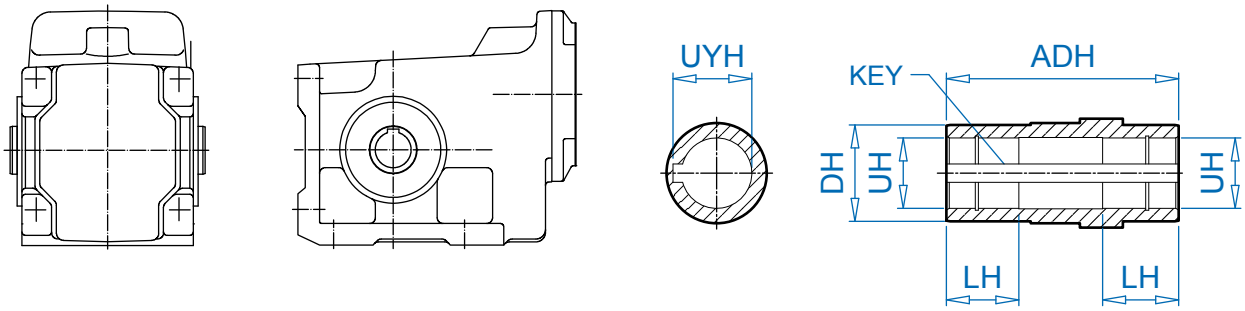


| TYPE | UH | DIAMETER TOLERANCE | ADH | LH | DH | UYH | KEY SIZE w x h x l | KEY QTY |
|---|---|---|---|---|---|---|---|---|
| **SK 92072 AX** | 0.750* | +0.0010 / -0.0000 | 4.57 | 0.98 | 1.38 | 0.84 | 3/16 x 3/16 x 2 | 2 |
| | 0.500 | +0.0010 / -0.0000 | 4.57 | 0.98 | 1.38 | 0.56 | 1/8 x 1/8 x 7/8 | 2 |
| | 25mm | +0.021 / -0.000mm | 116mm | 30mm | 35mm | 28.3mm | 8 X 7 x 25mm | 2 |
| **SK 92172 AX** | 0.750 | +0.0010 / -0.0000 | 5.28 | 1.18 | 1.38 | 0.84 | 3/16 x 3/16 x 2 | 2 |
| | 20mm | +0.021 / -0.000mm | 134 | 40 | 35 | 22.8 | 6 x 6 x 50mm | 2 |
| **SK 92372 AX** | 1.1875* | +0.0010 / -0.0000 | 6.46 | 1.97 | 1.97 | 1.30 | 1/4 x 1/4 x 2-1/4 | 2 |
| | 1.250 | +0.0010 / -0.0000 | 6.46 | 1.97 | 1.97 | 1.37 | 1/4 x 1/4 x 2-1/4 | 2 |
| | 1.4375 | +0.0010 / -0.0000 | 6.46 | 1.97 | 1.97 | 1.61 | 3/8 x 3/8 x 2-1/2 | 2 |
| | 30mm | +0.021 / -0.000mm | 164mm | 50mm | 50mm | 33.3mm | 8 x 7 x 60mm | 2 |
| **SK 92672 AX** | 1.375* | +0.0010 / -0.0000 | 6.69 | 2.36 | 2.17 | 1.52 | 5/16 x 5/16 x 2-1/2 | 2 |
| | 1.4375 | +0.0010 / -0.0000 | 6.69 | 2.36 | 2.17 | 1.61 | 3/8 x 3/8 x 2-1/2 | 2 |
| | 1.500 | +0.0010 / -0.0000 | 6.69 | 2.36 | 2.17 | 1.67 | 3/8 x 3/8 x 2-1/2 | 2 |
| | 35mm | +0.025 / -0.000mm | 170mm | 60mm | 55mm | 38.3mm | 10 x 8 x 60mm | 2 |
| **SK 92772 AX** | 1.500* | +0.0010 / -0.0000 | 7.56 | 2.36 | 2.17 | 1.67 | 3/8 x 3/8 x 2-1/4 | 2 |
| | 1.4375 | +0.0010 / -0.0000 | 7.56 | 2.36 | 2.17 | 1.61 | 3/8 x 3/8 x 2-1/4 | 2 |
| | 40mm | +0.025 / -0.000mm | 192mm | 60mm | 55mm | 43.3mm | 12 x 8 x 60mm | 2 |

* standard size

- Dimensions are in inches unless otherwise noted.
- For shaft sizes not shown, consult NORD.




Send Quote Requests to info@automatedpt.com
Call +1(800)985-6929 To Order or Order Online At Nordgearmotors.com

# Hollow Shaft Dimensions

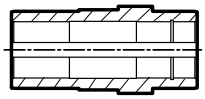

## Hollow Shaft Foot Mount Dimensions (AX)

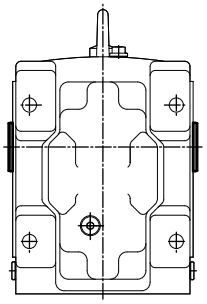

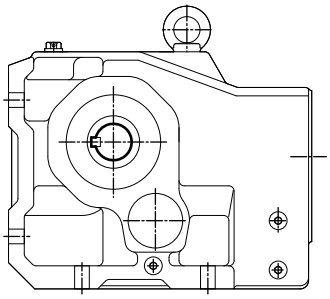

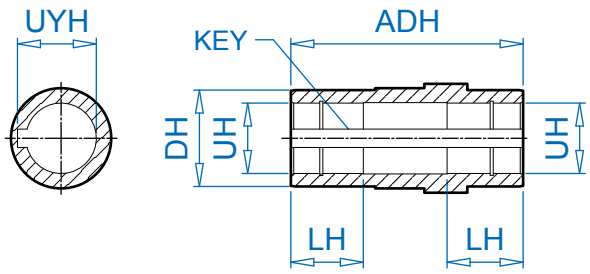


DIMENSIONS — Dimensions in Inches

| TYPE | UH | DIAMETER TOLERANCE | ADH | LH | DH | UYH | KEY SIZE w x h x l | KEY QTY |
|---|---|---|---|---|---|---|---|---|
| **SK 9012.1 AX** | 1.1875* | +0.0010 / -0.0000 | 5.83 | 1.97 | 1.77 | 1.30 | 1/4 x 1/4 x 2 | 2 |
| **SK 9013.1 AX** | 1.250 | +0.0010 / -0.0000 | 5.83 | 1.97 | 1.77 | 1.37 | 1/4 x 1/4 x2 | 2 |
| | 30mm | +0.021 / -0.000mm | 148mm | 50mm | 45mm | 33.3mm | 8 x 7 x 60mm | 2 |
| **SK 9016.1 AX** | 1.1875* | +0.0010 / -0.0000 | 5.83 | 1.97 | 1.77 | 1.30 | 1/4 x 1/4 x 2 | 2 |
| **SK 9017.1 AX** | 1.250 | +0.0010 / -0.0000 | 5.83 | 1.97 | 1.77 | 1.37 | 1/4 x 1/4 x 2 | 2 |
| | 30mm | +0.021 / -0.000mm | 148mm | 50mm | 45mm | 33.3mm | 8 x 7 x 60mm | 2 |
| **SK 9022.1 AX** | 1.375 | +0.0010 / -0.0000 | 7.09 | 2.36 | 1.97 | 1.53 | 5/16 x 5/16 x 2-1/2 | 2 |
| **SK 9023.1 AX** | 35mm | +0.025 / -0.000mm | 180mm | 60mm | 50mm | 38.3mm | 10 x 8 x 60mm | 2 |
| **SK 9032.1 AX** | 1.500* | +0.0010 / -0.0000 | 8.27 | 2.76 | 2.17 | 1.67 | 3/8 x 3/8 x 2-3/4 | 2 |
| **SK 9033.1 AX** | 1.4375 | +0.0010 / -0.0000 | 8.27 | 2.76 | 2.17 | 1.61 | 3/8 x 3/8 x 2-3/4 | 2 |
| | 40mm | +0.025 / -0.000mm | 210mm | 70mm | 55mm | 43.3mm | 12 x 8 x 70mm | 2 |
| **SK 9042.1 AX** | 2.000* | +0.0012 / -0.0000 | 9.45 | 3.15 | 2.76 | 2.22 | 1/2 x 1/2 x 3 | 2 |
| **SK 9043.1 AX** | 1.9375 | +0.0012 / -0.0000 | 9.45 | 3.15 | 2.76 | 2.16 | 1/2 x 1/2 x 3 | 2 |
| | 50mm | +0.025 / -0.000mm | 240mm | 80mm | 70mm | 53.8mm | 14 x 9 x 80mm | 2 |
| **SK 9052.1 AX** | 2.375* | +0.0012 / -0.0000 | 11.81 | 3.94 | 3.35 | 2.65 | 5/8 x 5/8 x 4 | 2 |
| **SK 9053.1 AX** | 2.4375 | +0.0012 / -0.0000 | 11.81 | 3.94 | 3.35 | 2.62 | 5/8 x 7/16 x 4 | 2 |
| | 60mm | +0.030 / -0.000mm | 300mm | 100mm | 85mm | 64.4mm | 18 x 11 x 80mm | 2 |
| **SK 9072.1 AX** | 3.250* | +0.0012 / -0.0000 | 13.78 | 4.72 | 4.72 | 3.59 | 3/4 x 3/4 x 4-3/4 | 2 |
| | 2.9375 | +0.0012 / -0.0000 | 13.78 | 4.72 | 4.72 | 3.14 | 3/4 x 1/2 x 41/2 | 2 |
| | 2.750 | +0.0012 / -0.0000 | 13.78 | 4.72 | 4.72 | 3.03 | 5/8 x 5/8 x 4-1/2 | 2 |
| | 3.4375 | +0.0014 / -0.0000 | 13.78 | 4.72 | 4.72 | 3.82 | 7/8 x 7/8 x 4-3/4 | 2 |
| | 3.625 | +0.0014 / -0.0000 | 13.78 | 4.72 | 4.72 | 4.01 | 7/8 x 7/8 x 4-3/4 | 2 |
| | 90mm | +0.035 / -0.000mm | 350mm | 120mm | 120mm | 95.4mm | 22 x 14 x 120mm | 2 |
| **SK 9082.1 AX** | 4.000* | +0.0014 / -0.0000 | 16.54 | 5.51 | 5.12 | 4.44 | 1 x 1 x 5-1/2 | 2 |
| | 3.9375 | +0.0014 / -0.0000 | 16.54 | 5.51 | 5.12 | 4.25 | 1 x 3/4 x 6 | 2 |
| | 100mm | +0.035 / -0.000mm | 420mm | 140mm | 130mm | 106.4mm | 28 x 16 x 135mm | 2 |
| **SK 9086.1 AX** | 4.375* | +0.0014 / -0.0000 | 19.69 | 6.30 | 5.51 | 4.69 | 1 x 3/4 x 6 | 2 |
| | 4.4375 | +0.0014 / -0.0000 | 19.69 | 6.30 | 5.51 | 4.76 | 1 x 3/4 x 6 | 2 |
| | 110mm | +0.035 / -0.000mm | 500mm | 160mm | 140mm | 116.4mm | 28 x 16 x 180mm | 2 |

* standard size

- Dimensions are in inches unless otherwise noted.
- For shaft sizes not shown, consult NORD.


Send Quote Requests to info@automatedpt.com
Call +1(800)985-6929 To Order or Order Online At Nordgearmotors.com

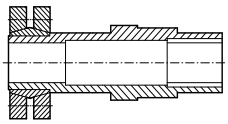

# Shrink Disc Shaft Dimensions

## Shrink Disc Shaft Dimensions (AZSH)

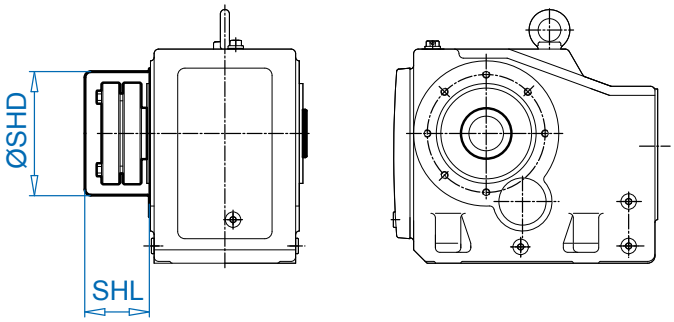


BEVEL (AZSH)

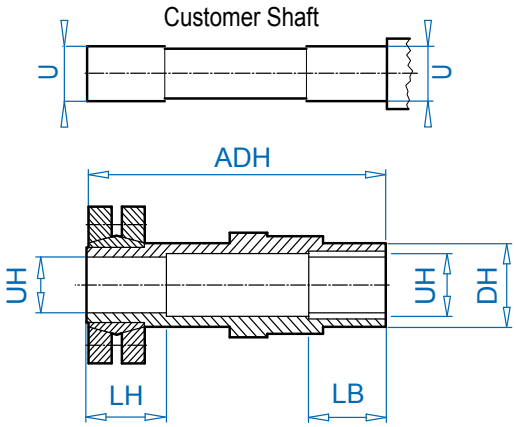


| Type | HOLLOW SHAFT | | ADH | LB | LH | DH | CUSTOMER SHAFT | |
|---|---|---|---|---|---|---|---|---|
| | UH | TOLERANCE | | | | | U | TOLERANCE |
| **SK 92072 AZSH** | 1.000 | +0.0008 / -0.0000 | 5.67 | 1.22 | 1.26 | 1.38 | 1.000 | +0.0000 / -0.0005 |
| | 25mm | +0.021 / -0.000mm | 144mm | 31mm | 32mm | 35mm | 25 mm | +0.000 / -0.013mm |
| **SK 92172 AZSH** | 1.000 | +0.0008 / -0.0000 | 6.69 | 1.22 | 1.38 | 1.57 | 1.000 | +0.0000 / -0.0005 |
| | 25mm | +0.021 / -0.000mm | 170mm | 31mm | 35mm | 40mm | 25mm | +0.000 / -0.013mm |
| **SK 92372 AZSH** | 1.1875 | +0.0009 / -0.0000 | 7.87 | 1.24 | 1.42 | 1.97 | 1.1875 | +0.0000 / -0.0006 |
| | 30mm | +0.021 / -0.000mm | 200mm | 31.5mm | 36mm | 50mm | 30 mm | +0.000 / -0.013mm |
| **SK 92672 AZSH** | 1.375 | +0.0009 / -0.0000 | 8.27 | 1.63 | 1.57 | 2.17 | 1.375 | +0.0000 / -0.0006 |
| | 35mm | +0.025 / -0.000mm | 210mm | 41.5mm | 40mm | 55mm | 35 mm | +0.000 / -0.016mm |
| **SK 92772 AZSH** | 1.500 | +0.0009 / -0.0000 | 9.37 | 1.63 | 1.73 | 2.17 | 1.500 | +0.0000 / -0.0006 |
| | 40mm | +0.025 / -0.000mm | 238mm | 41.5mm | 44mm | 55mm | 40 mm | +0.000 / -0.016mm |
| **SK 9012.1 AZSH** | 1.375 | +0.0009 / -0.0000 | 7.40 | 1.63 | 1.57 | 1.97 | 1.375 | +0.0000 / -0.0006 |
| **SK 9013.1 AZSH** | 35mm | +0.025 / -0.000mm | 188mm | 41.5mm | 40mm | 50mm | 35mm | +0.000 / -0.016mm |
| **SK 9016.1 AZSH** | 1.500 | +0.0009 / -0.0000 | 7.40 | 1.57 | 1.57 | 1.97 | 1.500 | +0.0000 / -0.0006 |
| **SK 9017.1 AZSH** | 40mm | +0.025 / -0.000mm | 188mm | 41.5mm | 40mm | 50mm | 40mm | +0.000 / -0.016mm |
| **SK 9022.1 AZSH** | 1.500 | +0.0009 / -0.0000 | 8.90 | 1.63 | 1.73 | 2.17 | 1.500 | +0.0000 / -0.0006 |
| **SK 9023.1 AZSH** | 40mm | +0.025 / -0.000mm | 226mm | 41.5mm | 44mm | 55mm | 40mm | +0.000 / -0.016mm |
| **SK 9032.1 AZSH** | 2.000 | +0.0011 / -0.0000 | 10.24 | 2.03 | 1.81 | 2.76 | 2.000 | +0.0000 / -0.0007 |
| **SK 9033.1 AZSH** | 50mm | +0.025 / -0.000mm | 260mm | 52mm | 46mm | 70mm | 50mm | +0.000 / -0.016mm |
| **SK 9042.1 AZSH** | 2.375 | +0.0011 / -0.0000 | 12.01 | 2.44 | 2.28 | 3.15 | 2.375 | +0.0000 / -0.0007 |
| **SK 9043.1 AZSH** | 60mm | +0.030 / -0.000mm | 305mm | 62mm | 58mm | 80mm | 60mm | +0.000 / -0.019mm |
| **SK 9052.1 AZSH** | 2.750 | +0.0011 / -0.0000 | 14.96 | 2.83 | 2.91 | 3.94 | 2.750 | +0.0000 / -0.0007 |
| **SK 9053.1 AZSH** | 70mm | +0.030 / -0.000mm | 380mm | 72mm | 74mm | 100mm | 70mm | +0.000 / -0.019mm |
| **SK 9072.1 AZSH** | 3.250 | +0.0013 / -0.0000 | 16.93 | 3.23 | 3.23 | 4.72 | 3.250 | +0.0000 / -0.0008 |
| | 95mm | +0.035 / -0.000mm | 430mm | 82mm | 82mm | 120mm | 95mm | +0.000 / -0.022mm |
| **SK 9082.1 AZSH** | 4.000 | +0.0013 / -0.0000 | 19.69 | 3.27 | 2.91 | 5.51 | 4.000 | +0.0000 / -0.0008 |
| | 110mm | +0.035 / -0.000mm | 500mm | 83mm | 74mm | 140mm | 110mm | +0.000 / -0.022mm |
| **SK 9086.1 AZSH** | 4.750 | +0.0015 / -0.0000 | 23.70 | 3.27 | 3.86 | 6.30 | 4.750 | +0.0000 / -0.0009 |
| | 125mm | +0.040 / -0.000mm | 602mm | 83mm | 98mm | 160mm | 125mm | +0.000 / -0.025mm |
| **SK 9092.1 AZSH** | 5.500 | +0.0015 / -0.0000 | 27.95 | 4.06 | 3.86 | 7.87 | 5.500 | +0.0000 / -0.0009 |
| | 150mm | +0.040 / -0.000mm | 710mm | 104mm | 98mm | 200mm | 150 mm | +0.000 / -0.025mm |
| **SK 9096.1 AZSH** | 6.00/6.250* | +0.0015 / -0.0000 | 31.65 | 3.74 | 5.08 | 7.87 | 6.00/6.250 | +0.0000 / -0.0009 |
| | 155/160mm* | +0.040 / -0.000mm | 804mm | 95mm | 129mm | 200mm | 155/160mm | +0.000 / -0.025mm |

* Non-shrink disc side diameter larger for clearance.




Send Quote Requests to info@automatedpt.com
Call +1(800)985-6929 To Order or Order Online At Nordgearmotors.com

# Shrink Disc Shaft Dimensions

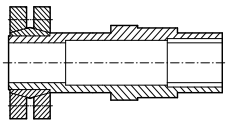

## Heavy Duty Shrink Disc Shaft Dimensions (AZVSH)

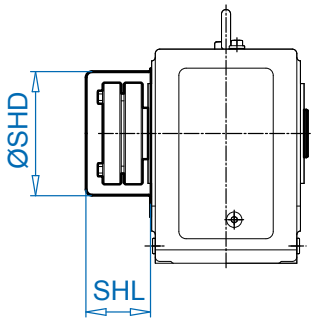


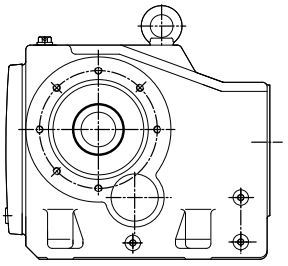

BEVEL (AZSH)

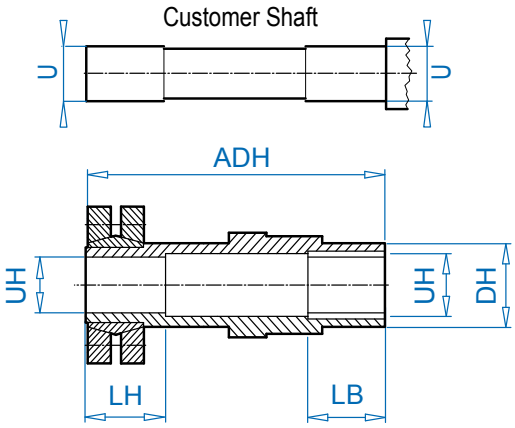


DIMENSIONS — Dimensions in Inches

| TYPE | HOLLOW SHAFT | | ADH | LB | LH | DH | CUSTOMER SHAFT | |
|---|---|---|---|---|---|---|---|---|
| | UH | TOLERANCE | | | | | U | TOLERANCE |
| **SK 9072.1 AZVSH** | 3.250 | +0.0013 / -0.0000 | 18.27 | 3.23 | 4.33 | 4.72 | 3.250 | +0.0000 / -0.0008 |
| | 85mm | +0.035 / -0.000mm | 464mm | 82mm | 110mm | 120mm | 85mm | +0.000 / -0.022mm |
| | 95mm | +0.035 / -0.000mm | 464mm | 82mm | 110mm | 120mm | 95mm | +0.000 / -0.022mm |
| **SK 9082.1 AZVSH** | 4.375 | +0.0013 / -0.0000 | 23.11 | 3.27 | 6.30 | 5.51 | 4.375 | +0.0000 / -0.0008 |
| | 110mm | +0.035 / -0.000mm | 587mm | 83mm | 160mm | 140mm | 110mm | +0.000 / -0.022mm |
| **SK 9086.1 AZVSH** | 4.750 | +0.0015 / -0.0000 | 26.54 | 3.27 | 6.69 | 6.30 | 4.750 | +0.0000 / -0.0009 |
| | 130mm | +0.040 / -0.000mm | 674mm | 83mm | 170mm | 160mm | 130mm | +0.000 / -0.025mm |
| **SK 9092.1 AZVSH** | 5.500 | +0.0015 / -0.0000 | 29.69 | 4.06 | 5.12 | 7.87 | 5.500 | +0.0000 / -0.0009 |
| | 150mm | +0.040 / -0.000mm | 754mm | 104mm | 130mm | 200mm | 150mm | +0.000 / -0.025mm |
| **SK 9096.1 AZVSH** | 6.000/6.250* | +0.0015 / -0.0000 | 35.59 | 3.74 | 9.02 | 7.87 | 6.00/6.250 | +0.0000 / -0.0009 |
| | 155/160mm* | +0.040 / -0.000mm | 904mm | 95mm | 229mm | 200mm | 155/160mm | +0.000 / -0.025mm |

* Non-shrink disc side diameter larger for clearance.


Send Quote Requests to info@automatedpt.com
Call +1(800)985-6929 To Order or Order Online At Nordgearmotors.com

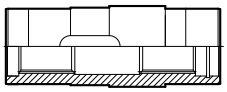

# Splined Hollow Shaft Dimensions

## Splined Hollow Shaft Dimensions (EA)

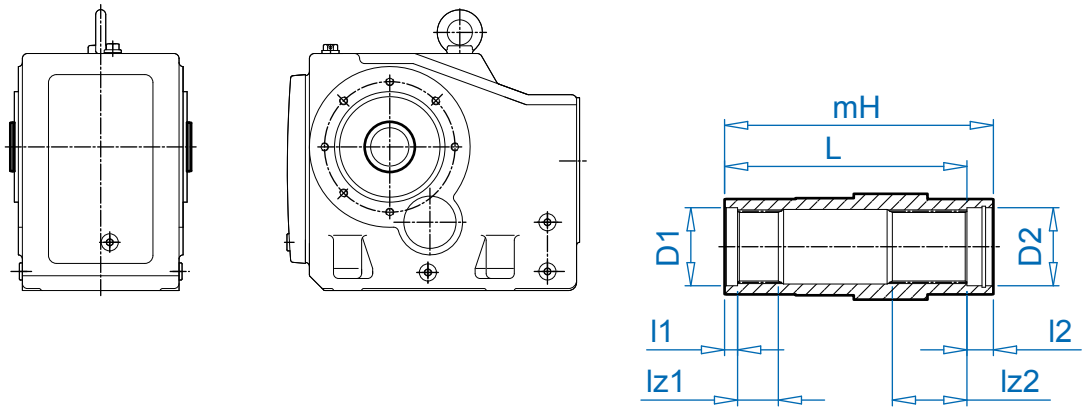


| Type | HUB PROFILE DIN 5480 [mm] | l1 [mm] | l2 [mm] | lz1 [mm] | lz2 [mm] | mH [mm] | D1 / D2 [mm] | L * [mm] |
|---|---|---|---|---|---|---|---|---|
| **SK 9012.1 EA** | N30 x 1.25 x 30 x 22 x 9H | 28 | 28 | 35 | 35 | 148 | 35 | 120 |
| **SK 9016.1 EA** | N30 x 1.25 x 30 x 22 x 9H | 28 | 28 | 35 | 35 | 148 | 35 | 120 |
| **SK 9022.1 EA** | N40 x 2 x 30 x 18 x 9H | 25 | 25 | 42 | 42 | 180 | 40.5 | 155 |
| **SK 9032.1 EA** | N50 x 2 x 30 x 24 x 9H | 23 | 23 | 49 | 49 | 210 | 55 | 187 |
| **SK 9042.1 EA** | N65 x 2 x 30 x 31 x 9H | 25 | 25 | 58 | 58 | 240 | 70 | 215 |
| **SK 9052.1 EA** | N70 x 2 x 30 x 34 x 9H | 25 | 25 | 72 | 72 | 300 | 75 | 275 |
| **SK 9072.1 EA** | N85 x 3 x 30 x 27 x 9H | 26 | 26 | 100 | 100 | 350 | 86 | 324 |
| **SK 9082.1 EA** | N105 x 3 x 30 x 34 x 9H | 60 | 60 | 90 | 90 | 420 | 110 | 360 |
| **SK 9086.1 EA** | N130 x 5 x 30 x 24 x 9H | 60 | 60 | 110 | 110 | 500 | 135 | 440 |
| **SK 9092.1 EA** | N140 x 3 x 30 x 45 x 9H | 60 | 60 | 120 | 120 | 610 | 150 | 550 |




Send Quote Requests to info@automatedpt.com
Call +1(800)985-6929 To Order or Order Online At Nordgearmotors.com

# Fixing Element Kit







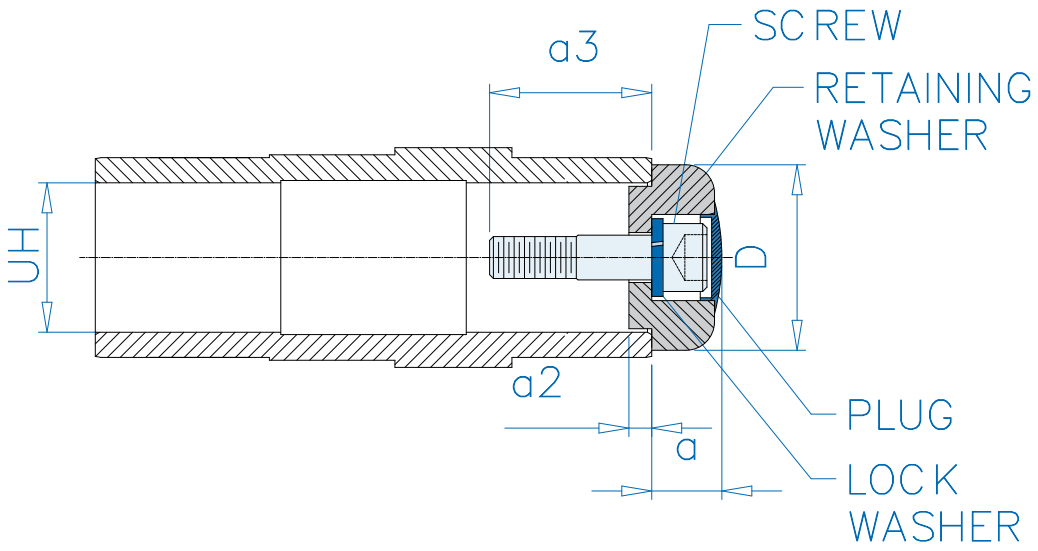


**Inch Shaft Hollow Bore (in)**

| UH | D | a | a2 | Screw ❶ | a3 ❶ | Screw ❷ | a3 ❷ | Screw ❸ | a3 ❸ |
|---|---|---|---|---|---|---|---|---|---|
| 0.5000 | 0.984 | 0.595 | 0.110 | 10 - 32 x 5/8 | 0.499 | - | - | - | - |
| 0.7500 | 1.181 | 0.557 | 0.118 | 1/4 - 20 x 3/4 | 0.652 | 1/4 - 20 x 1 | 0.902 | - | - |
| 1.0000 | 1.496 | 0.767 | 0.150 | 3/8 - 16 x 3/4 | 0.624 | 3/8 - 16 x 1-1/4 | 1.124 | - | - |
| 1.1875 | 1.575 | 0.769 | 0.150 | 7-16 - 14 x 2-1/16 | 2.016 | - | - | - | - |
| 1.2500 | 1.575 | 0.769 | 0.150 | 7-16 - 14 x 2-1/16 | 2.016 | - | - | - | - |
| 1.3750 | 1.772 | 0.946 | 0.197 | 5/8 - 11 x 1-1/2 | 1.461 | 5/8 - 11 x 2-1/4 | 2.211 | 5/8 - 11 x 1 | 0.961 |
| 1.4375 | 1.772 | 0.946 | 0.197 | 5/8 - 11 x 1-1/2 | 1.461 | 5/8 - 11 x 2-1/4 | 2.211 | 5/8 - 11 x 1 | 0.961 |
| 1.5000 | 1.772 | 0.946 | 0.197 | 5/8 - 11 x 1-1/2 | 1.461 | 5/8 - 11 x 2-1/4 | 2.211 | 5/8 - 11 x 1 | 0.961 |
| 1.6875 | 2.165 | 0.927 | 0.315 | 5/8 - 11 x 2 | 2.000 | 5/8 - 11 x 1-1/2 | 1.5 | - | - |
| 1.9375 | 2.362 | 0.966 | 0.315 | 5/8 - 11 x 2-1/4 | 2.250 | - | - | - | - |
| 2.0000 | 2.559 | 0.971 | 0.315 | 5/8 - 11 x 2-1/4 | 2.250 | - | - | - | - |
| 2.1875 | 2.559 | 0.971 | 0.315 | 5/8 - 11 x 2-1/4 | 2.250 | - | - | - | - |
| 2.3750 | 2.953 | 1.129 | 0.354 | 3/4 - 10 x 2-1/2 | 2.500 | - | - | - | - |
| 2.4375 | 2.953 | 1.129 | 0.354 | 3/4 - 10 x 2-1/2 | 2.500 | - | - | - | - |
| 2.7500 | 3.740 | 1.132 | 0.354 | 3/4 - 10 x 2-1/2 | 2.500 | - | - | - | - |
| 2.9375 | 3.740 | 1.132 | 0.354 | 3/4 - 10 x 2-1/2 | 2.500 | - | - | - | - |
| 3.2500 | 4.106 | 1.132 | 0.354 | 3/4 - 10 x 2-1/2 | 2.500 | - | - | - | - |
| 3.4375 | 4.106 | 1.132 | 0.354 | 3/4 - 10 x 2-1/2 | 2.500 | - | - | - | - |
| 3.6250 | 4.106 | 1.132 | 0.354 | 3/4 x 10 x 2-1/2 | 2.500 | - | - | - | - |
| 3.9375 | 4.724 | 1.299 | 0.394 | 7/8 - 9 x 3-1/2 | 3.500 | - | - | - | - |
| 4.0000 | 4.724 | 1.299 | 0.394 | 7/8 - 9 x 3-1/2 | 3.500 | - | - | - | - |
| 4.4375 | 5.315 | 1.299 | 0.386 | 7/8 - 9 x 3-1/2 | 3.500 | - | - | - | - |
| 4.7500 | 5.906 | 1.299 | 0.394 | 7/8 - 9 x 3-1/2 | 3.500 | - | - | - | - |

**Metric Hollow Bore (mm)**

| UH | D | a | a2 | Screw ❶ | a3 ❶ | Screw ❷ | a3 ❷ |
|---|---|---|---|---|---|---|---|
| 25 | 38 | 19 | 3.8 | M10 x 45 | 41.8 | M10 x 30 | 26.8 |
| 30 | 40 | 19 | 3.8 | M10 x 45 | 43.8 | M10 x 30 | 28.8 |
| 35 | 45 | 23.5 | 3.8 | M12 x 55 | 54 | M12 x 35 | 34 |
| 40 | 55 | 24 | 8 | M16 x 70 | 70 | M16 x 45 | 45 |
| 50 | 65 | 25 | 8 | M16 x 70 | 70 | M16 x 45 | 45 |
| 60 | 75 | 29 | 9 | M20 x 90 | 90 | M20 x 55 | 55 |
| 70 | 95 | 29 | 9 | M20 x 90 | 90 | M20 x 55 | 55 |
| 80 | 102 | 34 | 9 | M20 x 100 | 100 | M20 x 55 | 55 |
| 90 | 102 | 34 | 9 | M24 x 110 | 110 | - | - |
| 100 | 120 | 34.5 | 10 | M24 x 110 | 110 | M24 x 65 | 65 |
| 110 | 135 | 34.5 | 10 | M24 x 110 | 110 | M24 x 65 | 65 |

❶, ❷, ❸ - Each fixing element kit may contain up to 3 different kinds of screws


Send Quote Requests to info@automatedpt.com
Call +1(800)985-6929 To Order or Order Online At Nordgearmotors.com

Send Quote Requests to info@automatedpt.com
Call +1(800)985-6929 To Order or Order Online At Nordgearmotors.com

# Right-angle Helical-worm Gearmotors

## Selection

- Order Form
- Unit Examples
- 0.16 hp
- 0.25 hp
- 0.33 hp
- 0.50 hp
- 0.75 hp
- 1.0 hp
- 1.5 hp
- 2.0 hp
- 3.0 hp
- 5.0 hp
- 7.5 hp
- 10 hp
- 15 hp
- 20 hp

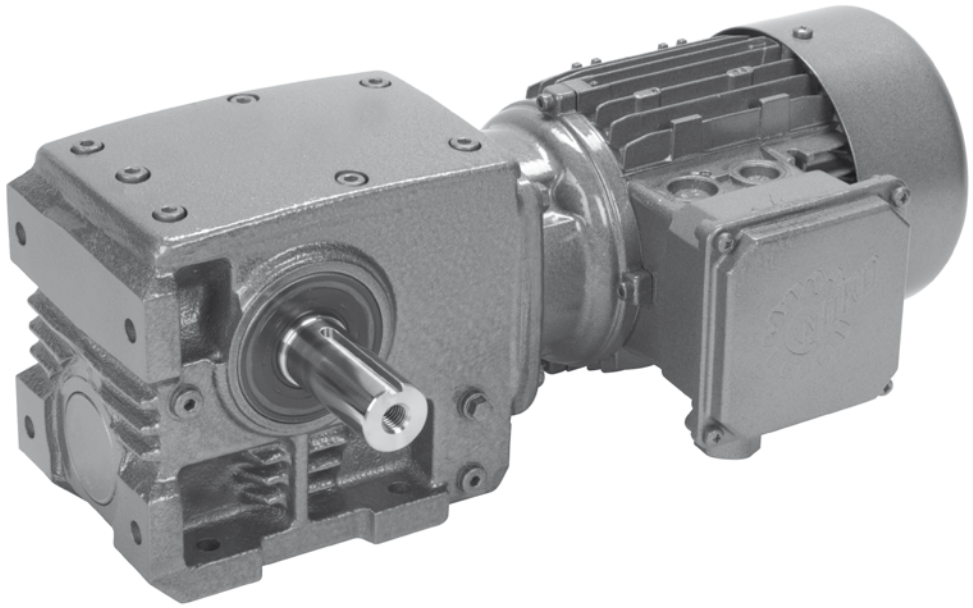

NORD® DRIVESYSTEMS

www.nord.com

UNICASE™

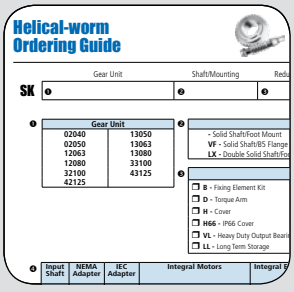


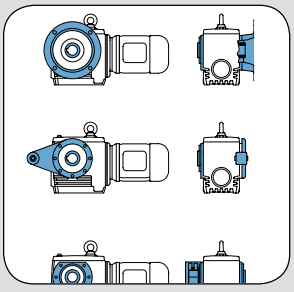

| Motor Power $P_n$ [hp] | Output Speed $n_2$ [rpm] | Output Torque $T_a$ [lb-in] | Service Factor $f_B$ | AGMA Class | Gear Ratio $i_{tot}$ | $F_r$ On [lb] |
|---|---|---|---|---|---|---|
| 1.0 | 18 | 2786 | 3.3 | III | 94.19 | 30 |
| | 13 | 3320 | 3.3 | III | 129.00 | 33 |
| | 10 | 4069 | 2.9 | III | 165.50 | 36 |
| | 9.0 | 4441 | 2.7 | III | 183.50 | 36 |
| | 6.8 | 5567 | 2.3 | III | 241.50 | 36 |
| | 3.2 | 10580 | 1.2 | I | 510.00 | 32 |
| | 2.6 | 12885 | 1.0 | I | 645.00 | 28 |
| | 6.4 | 7027 | 1.9 | II | 257.63 | 36 |
| | 5.5 | 6669 | 2.0 | III | 299.28 | 36 |
| | 4.5 | 7854 | 1.7 | II | 365.07 | 36 |
| | 3.5 | 9716 | 1.4 | II | 468.37 | 34 |
| | 3.2 | 10574 | 1.3 | I | 519.31 | 32 |
| | 2.5 | 13197 | 1.1 | I | 660.60 | 27 |
| | 6.1 | 7565 | 3.3 | III | 269.76 | |

Send Quote Requests to info@automatedpt.com
Call +1(800)985-6929 To Order or Order Online At Nordgearmotors.com

# Helical-worm Ordering Guide

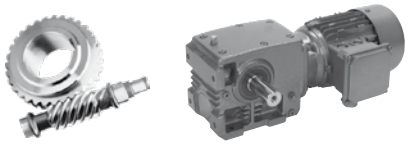

DRIVESYSTEMS

| | Gear Unit | Shaft/Mounting | Reducer Options | | Motor/Input | Motor Options |
|---|---|---|---|---|---|---|
| **SK** | ❶ | ❷ | ❸ | - | ❹ | |
| | | | | | see page 690 | see page 690 |

❶

| Gear Unit | |
|---|---|
| 02040 | 13050 |
| 02050 | 13063 |
| 12063 | 13080 |
| 12080 | 33100 |
| 32100 | 43125 |
| 42125 | |

❷

| Shaft/Mounting | |
|---|---|
| **-** Solid Shaft/Foot Mount | **AZ** - Hollow Shaft/B14 Flange |
| **VF -** Solid Shaft/B5 Flange | **AF** - Hollow Shaft/B5 Flange |
| **LX -** Double Solid Shaft/Foot | |

❸

| Reducer Options | | |
|---|---|---|
| ❒ **B -** Fixing Element Kit | ❒ **SH -** Shrink Disc & Cover | ❒ **VI -** Flouro-rubber Seals |
| ❒ **D -** Torque Arm | ❒ **PR -** Flange Pilot Removal | ❒ **OSG -** Oil Sight Glass |
| ❒ **H -** Hollow Shaft Cover | ❒ **SM5 -** Stainless Steel Shaft | ❒ **OA -** Oil Expansion Chamber |
| ❒ **H66 -** IP66 Hollow Shaft Cover | ❒ **SWA -** Special Hollow Shaft | ❒ **OC -** Oil Cooler |
| ❒ **VL -** Heavy Duty Output Bearings | ❒ **SWV -** Special Solid Shaft | ❒ **MDP -** Magnetic Drain Plug |
| ❒ **LL -** Long Term Storage | ❒ Cross Drilled Shaft | ❒ **ADP -** Additional Drain Plug |

❹

| Input Shaft | NEMA Adapter | IEC Adapter | Integral Motors | | Integral Energy Efficent Motors | | Sugar Scoop | Motor Platform | Servo Adapter (Keyed) |
|---|---|---|---|---|---|---|---|---|---|
| **W** | **N56C** | **IEC 63** | **63S/4** - 0.16hp | **100L/4** - 3hp | **80LH/4** - 1hp | **132SH/4** - 7.5hp | **S56** | **MKN056** | **SEP 100** |
| | **N140TC** | **IEC 71** | **63L/4** - 0.25hp | **100LA/4** - 5hp | **90SH/4** - 1.5hp | **132MH/4** - 10hp | **S140T** | **MKN140** | **SEP 130** |
| | **N180TC** | **IEC 80** | **71S/4** - 0.33hp | **112M/4** - 5.4hp | **90LH/4** - 2hp | **160MH/4** - 15hp | **S180T** | **MKN180** | **SEP 165** |
| | **N210TC** | **IEC 90** | **71L/4** - 0.50hp | **132S/4** - 7.5hp | **100LH/4** - 3hp | **160LH/4** - 20hp | **S210T** | **MKN210** | **SEP 215** |
| | **N250TC** | **IEC 100** | **80S/4** - 0.75hp | **132M/4** - 10hp | **112MH/4** - 5hp | | **S250T** | **MKN250** | **SEP 300** |
| | | **IEC 112** | **80L/4** - 1hp | **160M/4** - 15hp | | | | | **Servo Adapter (Clamp)** |
| | | **IEC 132** | **90S/4** - 1.5hp | **160L/4** - 20hp | | | | | **SEK 100** |
| | | **IEC 160** | **90L/4** - 2hp | | | | | | **SEK 130** |
| | | | | | | | | | **SEK 165** |
| | | | | | | | | | **SEK 215** |
| | | | | | | | | | **SEK 300** |

GEARMOTORS

## Product Specifications

**Ratio**

_____ :1

see pages 578 - 596

**OR**

**Output Speed**

_____ rpm

see pages 578 - 596

**Mounting Position**

- ❍ M1
- ❍ M2
- ❍ M3
- ❍ M4
- ❍ M5
- ❍ M6
- ❍ Special _____

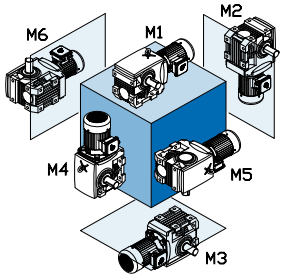


**Paint**

- ❍ Standard Stainles Steel Paint
- ❍ NSD+ (gray)
- ❍ NSD+W (white)
- ❍ NSD-X3 (gray)
- ❍ NSD-X3W (white)
- ❍ Casting Primed
- ❍ Special _____

**Lubricant**

- ❍ Standard
- ❍ Synthetic
- ❍ Food Grade
- ❍ Other _____

**Solid Shaft Side** (if required)

- ❍ Shaft Side A
- ❍ Shaft Side B
- ❍ Shaft Side A&B

see page 18

**Hollow Shaft Diameter** (if required)

see pages 669 - 671

**B5 Flange Side** (if required)

- ❍ Flange Side A
- ❍ Flange Side B
- ❍ Flange Side A&B

see page 18

**B5 Flange Diameter** (if required)

**Torque Arm Side & Location** (if required)

- ❍ Side A
- ❍ Side B

Location

see pages 18

**Shrink Disc Side** (if required)

- ❍ Side A
- ❍ Side B

see pages 18

**H66 Side** (if required)

- ❍ H66 Side A
- ❍ H66 Side B

see pages 18

## Gearmotor Only Details

**Voltage & Frequency**

- ❍ 230/460V-60Hz (460V only ≥ 40 hp)
- ❍ 575V-60Hz
- ❍ 208V-60Hz
- ❍ 400V-50Hz
- ❍ 115/230V-60Hz, 1 ph.
- ❍ Other _____

**Terminal Box Pos.**

- ❍ TB1
- ❍ TB2
- ❍ TB3
- ❍ TB4

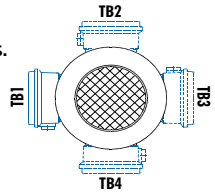


Mtg. Pos. M1 Shown

**Conduit Entry Loc.**

- ❍ CE I *
- ❍ CE II
- ❍ CE III *
- ❍ CE IV

* Brakemotor

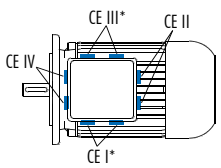


Mtg. Pos. M1 Shown


Send Quote Requests to info@automatedpt.com
Call +1(800)985-6929 To Order or Order Online At Nordgearmotors.com

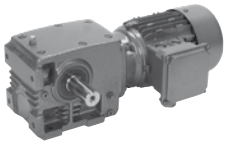



# Unit Examples

## Examples of Available Helical-worm Units with Solid Shaft Design

**SK 12080 - 90 S/4**
Helical Worm Unit
Solid Shaft Side A,
Foot Mounted
Two Stages

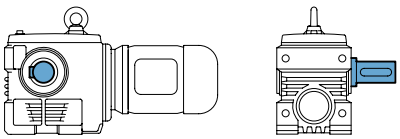

**SK 12080VF - 90 L/4**
Helical Worm Unit
Solid Shaft Side A,
B5 Flange Side A
Two Stages

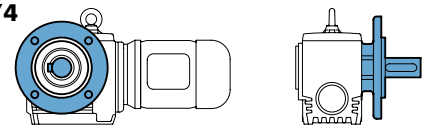

**SK 12080LX - 90 S/4**
Helical Worm Unit
Double Solid Shaft,
Foot Mounted
Two Stages

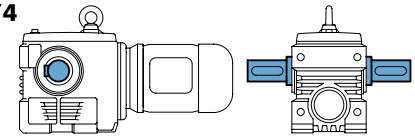

## Examples of Available Helical-worm Units with Hollow Shaft Design

**SK 12080AZ - 90 S/4**
Helical Worm Unit
Hollow Shaft,
B14 Flange Side A & B
Two Stages

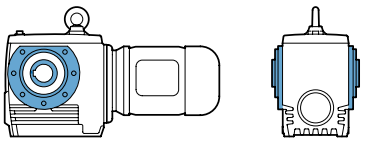

**SK 12080AF - 90 S/4**
Helical Worm Unit
Hollow Shaft,
B5 Flange & Shaft Side A
Two Stage

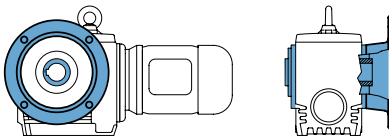

**SK 12080AZD - 90 S/4**
Helical Worm Unit
Hollow Shaft,
B14 Side A & B,
Torque Arm Side A at 180°
Two Stages

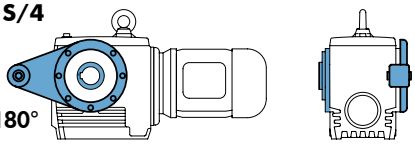

**SK 12080AZSH - 90 S/4**
Helical Worm Unit
Hollow Shaft,
B14 Flange Side A & B,
Shrink Disc & Cover Side B,
Two Stages

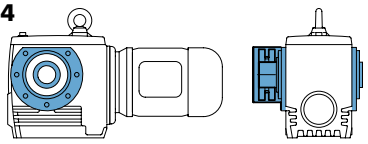

**SK 12080AZB - 90 S/4**
Helical Worm Unit
Hollow Shaft,
B14 Flange Side A & B,
Fixing Element Kit Side B
Two Stages

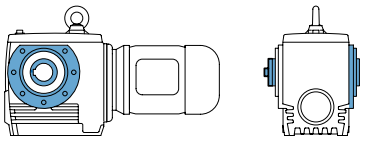

**SK 12080AZH - 90 S/4**
Helical Worm Unit
Hollow Shaft,
B14 Flange Side A & B,
Hollow Shaft Cover Side B
Two Stages

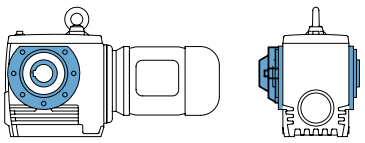




Send Quote Requests to info@automatedpt.com
Call +1(800)985-6929 To Order or Order Online At Nordgearmotors.com

# 0.16 hp Gearmotors

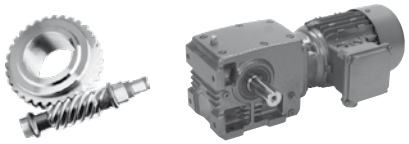

DRIVESYSTEMS

| Motor Power $P_n$ [hp] | Output Speed $n_2$ [rpm] | Output Torque $T_2$ [lb-in] | Service Factor $f_B$ | AGMA Class | Gear Ratio $i_{tot}$ | Standard Bearings $F_{RN}$ OHL [lb] | Standard Bearings $F_{AN}$ Thrust [lb] | Heavy Duty Bearings (VL) $F_{RVL}$ OHL [lb] | Heavy Duty Bearings (VL) $F_{AVL}$ Thrust [lb] | Model Type | Weight [lb] | Dim. Page |
|---|---|---|---|---|---|---|---|---|---|---|---|---|
| 0.16 | 386 | 23 | 17.7 | III | 4.40 | 767 | 698 | | | SK 02040 - 63S/4 | 27 | 622 |
| | 334 | 27 | 15.9 | III | 5.09 | 806 | 740 | | | | | |
| | 256 | 34 | 13.9 | III | 6.63 | 864 | 826 | | | | | |
| | 226 | 39 | 12.9 | III | 7.51 | 864 | 866 | | | | | |
| | 193 | 44 | 13.0 | III | 8.82 | 864 | 900 | | | | | |
| | 167 | 51 | 11.8 | III | 10.20 | 864 | 900 | | | | | |
| | 128 | 66 | 9.8 | III | 13.27 | 864 | 900 | | | | | |
| | 113 | 74 | 9.0 | III | 15.03 | 864 | 900 | | | | | |
| | 99 | 84 | 8.3 | III | 17.10 | 864 | 900 | | | | | |
| | 87 | 96 | 7.4 | III | 19.56 | 864 | 900 | | | | | |
| | 77 | 98 | 6.6 | III | 21.95 | 864 | 900 | | | | | |
| | 60 | 126 | 5.3 | III | 28.55 | 862 | 900 | | | | | |
| | 53 | 141 | 4.9 | III | 32.34 | 862 | 900 | | | | | |
| | 46 | 160 | 4.5 | III | 36.80 | 862 | 900 | | | | | |
| | 40 | 181 | 4.2 | III | 42.08 | 860 | 900 | | | | | |
| | 38 | 161 | 4.5 | III | 44.85 | 862 | 900 | | | | | |
| | 36 | 221 | 4.0 | III | 46.79 | 857 | 900 | | | | | |
| | 33 | 183 | 3.9 | III | 51.87 | 860 | 900 | | | | | |
| | 28 | 282 | 3.1 | III | 59.83 | 853 | 900 | | | | | |
| | 25 | 229 | 3.2 | III | 67.47 | 857 | 900 | | | | | |
| | 22 | 255 | 2.9 | III | 76.44 | 855 | 900 | | | | | |
| | 20 | 285 | 2.7 | III | 86.97 | 853 | 900 | | | | | |
| | 17 | 326 | 2.5 | III | 99.45 | 848 | 900 | | | | | |
| | 17 | 414 | 2.1 | III | 100.65 | 837 | 900 | | | | | |
| | 15 | 371 | 2.2 | III | 115.05 | 844 | 900 | | | | | |
| | 13 | 522 | 1.7 | II | 128.70 | 821 | 900 | | | | | |
| | 7.1 | 710 | 1.2 | I | 237.90 | 783 | 900 | | | | | |
| | 5.6 | 907 | 1.0 | I | 304.20 | 727 | 900 | | | | | |
| | 15 | 390 | 3.8 | III | 114.75 | 1285 | 1800 | 1361 | 1800 | SK 02050 - 63S/4 | 43 | 626 |
| | 13 | 434 | 3.4 | III | 130.05 | 1283 | 1800 | 1361 | 1800 | | | |
| | 11 | 485 | 3.2 | III | 147.90 | 1280 | 1800 | 1361 | 1800 | | | |
| | 10 | 700 | 2.3 | III | 170.10 | 1262 | 1800 | 1361 | 1800 | | | |
| | 8.8 | 788 | 2.1 | III | 194.18 | 1253 | 1800 | 1361 | 1800 | | | |
| | 7.3 | 939 | 1.7 | II | 231.41 | 1235 | 1800 | 1361 | 1800 | | | |
| | 4.4 | 1150 | 1.4 | II | 385.56 | 1206 | 1800 | 1361 | 1800 | | | |
| | 3.9 | 1313 | 1.2 | I | 440.13 | 1177 | 1800 | 1361 | 1800 | | | |
| | 3.2 | 1534 | 1.1 | I | 524.79 | 1130 | 1800 | 1361 | 1800 | | | |
| | 8.1 | 849 | 2.0 | III | 209.25 | 1247 | 1800 | 1361 | 1800 | SK 13050 - 63S/4 | 54 | 630 |
| | 5.8 | 1172 | 1.5 | II | 293.19 | 1202 | 1800 | 1361 | 1800 | | | |
| | 5.1 | 1333 | 1.3 | I | 333.43 | 1172 | 1800 | 1361 | 1800 | | | |
| | 4.1 | 1228 | 1.4 | II | 411.76 | 1193 | 1800 | 1361 | 1800 | | | |
| | 3.6 | 1415 | 1.2 | I | 474.31 | 1157 | 1800 | 1361 | 1800 | | | |
| | 2.9 | 1714 | 1.0 | I | 586.37 | 1085 | 1800 | 1361 | 1800 | | | |
| | 2.6 | 1943 | 0.9 | * | 664.56 | 1017 | 1800 | 1361 | 1800 | | | |
| | 2.2 | 2157 | 0.8 | * | 755.77 | 938 | 1800 | 1361 | 1800 | | | |
| | 2 | 2157 | 0.8 | * | 869.21 | 938 | 1800 | 1361 | 1800 | | | |
| | 1.7 | 2157 | 0.8 | * | 992.23 | 938 | 1800 | 1361 | 1800 | | | |
| | 1.3 | 2157 | 0.8 | * | 1332.04 | 938 | 1800 | 1361 | 1800 | | | |
| | 0.97 | 2157 | 0.8 | * | 1746.09 | 938 | 1800 | 1361 | 1800 | | | |

(AGMA Class I = $f_B$ 1.0 - 1.39 II = $f_B$ 1.4 - 1.99 III = $f_B$ ≥ 2.0 * = $f_B$ < 1.0)


Send Quote Requests to info@automatedpt.com
Call +1(800)985-6929 To Order or Order Online At Nordgearmotors.com

DRIVESYSTEMS

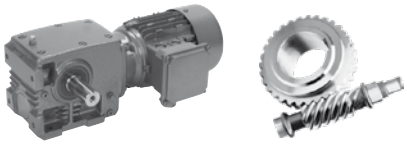

# 0.16 hp, 0.25 hp Gearmotors

| Motor Power $P_n$ [hp] | Output Speed $n_2$ [rpm] | Output Torque $T_2$ [lb-in] | Service Factor $f_B$ | AGMA Class | Gear Ratio $i_{tot}$ | Standard Bearings $F_{RN}$ OHL [lb] | Standard Bearings $F_{AN}$ Thrust [lb] | Heavy Duty Bearings (VL) $F_{RVL}$ OHL [lb] | Heavy Duty Bearings (VL) $F_{AVL}$ Thrust [lb] | Model Type | Weight [lb] | Dim. Page |
|---|---|---|---|---|---|---|---|---|---|---|---|---|
| **0.16** | 9.3 | 613 | 4.7 | III | 183.6.0 | 1789 | 1721 | 2468 | 2250 | **SK 12063 - 63S/4** | 52 | 634 |
| | 8.7 | 795 | 4.0 | III | 195.86◆ | 1780 | 1721 | 2462 | 2250 | | | |
| | 7.6 | 905 | 3.5 | III | 223.17◆ | 1775 | 1721 | 2457 | 2250 | | | |
| | 6.4 | 1056 | 2.9 | III | 264.24◆ | 1764 | 1721 | 2450 | 2250 | | | |
| | 3.7 | 1386 | 2.3 | III | 464.61◆ | 1739 | 1721 | 2432 | 2250 | | | |
| | 3.2 | 1548 | 2.1 | III | 529.38◆ | 1724 | 1721 | 2421 | 2250 | | | |
| | 2.7 | 1832 | 1.7 | II | 626.79◆ | 1692 | 1721 | 2399 | 2250 | | | |
| | 2.3 | 2112 | 1.6 | II | 737.53 | 1654 | 1721 | 2372 | 2250 | **SK 13063 - 63S/4** | 63 | 638 |
| | 1.8 | 2631 | 1.3 | I | 938.20 | 1566 | 1721 | 2313 | 2250 | | | |
| | 1.5 | 4204 | 0.8 | * | 1140.40◆ | 1109 | 1721 | 2030 | 2250 | | | |
| | 1.3 | 4204 | 0.8 | * | 1343.63◆ | 1109 | 1721 | 2030 | 2250 | | | |
| | 5.0 | 1377 | 4.5 | III | 339.48 | 2318 | 2025 | 2925 | 2700 | **SK 13080 - 63S/4** | 85 | 646 |
| | 4.2 | 1636 | 4.2 | III | 403.20 | 2304 | 2025 | 2925 | 2700 | | | |
| | 3.5 | 1467 | 4.6 | III | 482.13 | 2313 | 2025 | 2925 | 2700 | | | |
| | 3.1 | 1649 | 4.1 | III | 542.07 | 2302 | 2025 | 2925 | 2700 | | | |
| | 2.7 | 1881 | 3.6 | III | 630.68 | 2288 | 2025 | 2925 | 2700 | | | |
| | 2.4 | 2065 | 3.3 | III | 706.25 | 2275 | 2025 | 2925 | 2700 | | | |
| | 2.1 | 2354 | 2.9 | III | 805.28 | 2252 | 2025 | 2925 | 2700 | | | |
| | 1.8 | 2739 | 2.5 | III | 956.44 | 2219 | 2025 | 2925 | 2700 | | | |
| | 1.4 | 3361 | 2.0 | III | 1198.81 | 2149 | 2025 | 2925 | 2700 | | | |
| | 1.4 | 3435 | 4.1 | III | 1175.19 | 3645 | 2700 | 3645 | 3600 | **SK 33100 - 63S/4** | 149 | 654 |
| | 1.1 | 4318 | 3.3 | III | 1507.71 | 3645 | 2700 | 3645 | 3600 | | | |
| | 1.0 | 4787 | 2.9 | III | 1671.69 | 3645 | 2700 | 3645 | 3600 | | | |
| **0.25** | 382 | 36 | 11.2 | III | 4.40 | 763 | 686 | | | **SK 02040 - 63L/4** | 28 | 622 |
| | 330 | 43 | 9.9 | III | 5.09 | 799 | 727 | | | | | |
| | 253 | 55 | 8.7 | III | 6.63 | 864 | 806 | | | | | |
| | 224 | 62 | 8.1 | III | 7.51 | 864 | 842 | | | | | |
| | 190 | 71 | 8.1 | III | 8.82 | 864 | 900 | | | | | |
| | 165 | 82 | 7.3 | III | 10.20 | 864 | 900 | | | | | |
| | 127 | 105 | 6.1 | III | 13.27 | 864 | 900 | | | | | |
| | 112 | 118 | 5.6 | III | 15.03 | 862 | 900 | | | | | |
| | 98 | 134 | 5.2 | III | 17.10 | 862 | 900 | | | | | |
| | 86 | 153 | 4.6 | III | 19.56 | 862 | 900 | | | | | |
| | 77 | 157 | 4.1 | III | 21.95 | 862 | 900 | | | | | |
| | 59 | 202 | 3.3 | III | 28.55 | 860 | 900 | | | | | |
| | 52 | 226 | 3.1 | III | 32.34 | 857 | 900 | | | | | |
| | 46 | 257 | 2.8 | III | 36.80 | 855 | 900 | | | | | |
| | 40 | 290 | 2.6 | III | 42.08 | 853 | 900 | | | | | |
| | 37 | 257 | 2.8 | III | 44.85 | 855 | 900 | | | | | |
| | 36 | 353 | 2.5 | III | 46.79 | 846 | 900 | | | | | |
| | 32 | 293 | 2.5 | III | 51.87 | 853 | 900 | | | | | |
| | 28 | 452 | 2.0 | III | 59.83 | 833 | 900 | | | | | |
| | 25 | 368 | 2.0 | III | 67.47 | 844 | 900 | | | | | |
| | 22 | 409 | 1.8 | II | 76.44 | 839 | 900 | | | | | |
| | 19 | 457 | 1.7 | II | 86.97 | 833 | 900 | | | | | |
| | 17 | 523 | 1.6 | II | 99.45 | 821 | 900 | | | | | |
| | 17 | 664 | 1.3 | I | 100.65 | 794 | 900 | | | | | |
| | 15 | 594 | 1.4 | II | 115.05 | 808 | 900 | | | | | |
| | 13 | 837 | 1.1 | I | 128.70 | 749 | 900 | | | | | |
| | 7.1 | 1137 | 0.8 | * | 237.90 | 635 | 900 | | | | | |

◆ **Non-Footed units only**

(AGMA Class I = $f_B$ 1.0 - 1.39 II = $f_B$ 1.4 - 1.99 III = $f_B$ ≥ 2.0 * = $f_B$ < 1.0)

GEARMOTORS


Send Quote Requests to info@automatedpt.com
Call +1(800)985-6929 To Order or Order Online At Nordgearmotors.com

# 0.25 hp Gearmotors

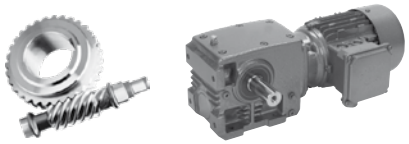

DRIVESYSTEMS

| Motor Power $P_n$ [hp] | Output Speed $n_2$ [rpm] | Output Torque $T_2$ [lb-in] | Service Factor $f_B$ | AGMA Class | Gear Ratio $i_{tot}$ | Standard Bearings $F_{RN}$ OHL [lb] | Standard Bearings $F_{AN}$ Thrust [lb] | Heavy Duty Bearings (VL) $F_{RVL}$ OHL [lb] | Heavy Duty Bearings (VL) $F_{AVL}$ Thrust [lb] | Model Type | Weight [lb] | Dim. Page |
|---|---|---|---|---|---|---|---|---|---|---|---|---|
| **0.25** | 29 | 400 | 3.7 | III | 57.38 | 1285 | 1800 | 1361 | 1800 | **SK 02050 - 63L/4** | 45 | 626 |
| | 26 | 449 | 3.3 | III | 65.25 | 1283 | 1800 | 1361 | 1800 | | | |
| | 21 | 454 | 3.3 | III | 80.58 | 1283 | 1800 | 1361 | 1800 | | | |
| | 18 | 515 | 2.9 | III | 92.82 | 1278 | 1800 | 1361 | 1800 | | | |
| | 15 | 625 | 2.4 | III | 114.75 | 1269 | 1800 | 1361 | 1800 | | | |
| | 13 | 696 | 2.1 | III | 130.05 | 1262 | 1800 | 1361 | 1800 | | | |
| | 11 | 778 | 2.0 | III | 147.90 | 1256 | 1800 | 1361 | 1800 | | | |
| | 9.9 | 1122 | 1.5 | II | 170.10 | 1211 | 1800 | 1361 | 1800 | | | |
| | 8.7 | 1262 | 1.3 | I | 194.18 | 1186 | 1800 | 1361 | 1800 | | | |
| | 7.3 | 1504 | 1.1 | I | 231.41 | 1136 | 1800 | 1361 | 1800 | | | |
| | 4.4 | 1843 | 0.9 | * | 385.56 | 1046 | 1800 | 1361 | 1800 | | | |
| | 3.8 | 2103 | 0.8 | * | 440.13 | 959 | 1800 | 1361 | 1800 | | | |
| | 16 | 597 | 4.4 | III | 104.04 | 1789 | 1721 | 2468 | 2250 | **SK 12063 - 63L/4** | 53 | 634 |
| | 14 | 667 | 3.9 | III | 118.32 | 1787 | 1721 | 2466 | 2250 | | | |
| | 12 | 786 | 3.4 | III | 144.33 | 1782 | 1721 | 2462 | 2250 | | | |
| | 10 | 884 | 3.1 | III | 162.18 | 1775 | 1721 | 2459 | 2250 | | | |
| | 9.2 | 983 | 2.9 | III | 183.60 | 1771 | 1721 | 2455 | 2250 | | | |
| | 8.6 | 1273 | 2.5 | III | 195.86◆ | 1748 | 1721 | 2439 | 2250 | | | |
| | 7.5 | 1451 | 2.2 | III | 223.17◆ | 1733 | 1721 | 2428 | 2250 | | | |
| | 6.4 | 1692 | 1.8 | II | 264.24◆ | 1708 | 1721 | 2410 | 2250 | | | |
| | 3.6 | 2220 | 1.4 | II | 464.61◆ | 1638 | 1721 | 2360 | 2250 | | | |
| | 3.2 | 2479 | 1.3 | I | 529.38◆ | 1595 | 1721 | 2331 | 2250 | | | |
| | 2.7 | 2936 | 1.1 | I | 626.79◆ | 1503 | 1721 | 2270 | 2250 | | | |
| | 7.2 | 1278 | 4.9 | III | 234.60 | 2322 | 2025 | 2925 | 2700 | **SK 12080 - 63L/4** | 75 | 642 |
| | 6.1 | 1826 | 3.4 | III | 276.92◆ | 2293 | 2025 | 2925 | 2700 | | | |
| | 2.6 | 3139 | 2.0 | III | 656.88◆ | 2176 | 2025 | 2925 | 2700 | | | |
| | 5.6 | 1964 | 2.7 | III | 297.73 | 2284 | 2025 | 2925 | 2700 | **SK 13080 - 63L/4** | 86 | 646 |
| | 4.9 | 2207 | 2.8 | III | 339.48 | 2266 | 2025 | 2925 | 2700 | | | |
| | 4.2 | 2621 | 2.6 | III | 403.20 | 2230 | 2025 | 2925 | 2700 | | | |
| | 3.5 | 2350 | 2.9 | III | 482.13 | 2255 | 2025 | 2925 | 2700 | | | |
| | 3.1 | 2643 | 2.6 | III | 542.07 | 2228 | 2025 | 2925 | 2700 | | | |
| | 2.7 | 3014 | 2.3 | III | 630.68 | 2189 | 2025 | 2925 | 2700 | | | |
| | 2.4 | 3308 | 2.1 | III | 706.25 | 2156 | 2025 | 2925 | 2700 | | | |
| | 2.1 | 3772 | 1.8 | II | 805.28 | 2093 | 2025 | 2925 | 2700 | | | |
| | 1.8 | 4388 | 1.6 | II | 956.44 | 1994 | 2025 | 2925 | 2700 | | | |
| | 1.4 | 5386 | 1.3 | I | 1198.81 | 1789 | 2025 | 2855 | 2700 | | | |
| | 0.82 | 9052 | 0.8 | * | 2058.82◆ | | 2025 | 1978 | 2700 | | | |
| | 2.5 | 3283 | 4.3 | III | 660.60 | 3645 | 2700 | 3645 | 3600 | **SK 33100 - 63L/4** | 150 | 654 |
| | 1.4 | 5504 | 2.6 | III | 1175.19 | 3645 | 2700 | 3645 | 3600 | | | |
| | 1.1 | 6918 | 2.0 | III | 1507.71 | 3645 | 2700 | 3645 | 3600 | | | |
| | 1.0 | 7670 | 1.8 | II | 1671.69 | 3645 | 2700 | 3645 | 3600 | | | |
| | 0.76 | 9884 | 1.4 | II | 2200.07 | 3404 | 2700 | 3645 | 3600 | | | |
| | 0.45 | 16423 | 0.9 | * | 3735.10 | 1582 | 2700 | 3645 | 3600 | | | |

◆ **Non-Footed units only**

(AGMA Class I = $f_B$ 1.0 - 1.39 II = $f_B$ 1.4 - 1.99 III = $f_B$ ≥ 2.0 * = $f_B$ < 1.0)


Send Quote Requests to info@automatedpt.com
Call +1(800)985-6929 To Order or Order Online At Nordgearmotors.com

DRIVESYSTEMS

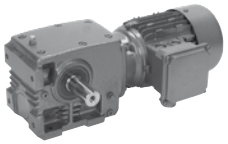



# 0.33 hp Gearmotors

| Motor Power $P_n$ [hp] | Output Speed $n_2$ [rpm] | Output Torque $T_2$ [lb-in] | Service Factor $f_B$ | AGMA Class | Gear Ratio $i_{tot}$ | Standard Bearings $F_{R\,N}$ OHL [lb] | Standard Bearings $F_{A\,N}$ Thrust [lb] | Heavy Duty Bearings (VL) $F_{R\,VL}$ OHL [lb] | Heavy Duty Bearings (VL) $F_{A\,VL}$ Thrust [lb] | Model Type | Weight [lb] | Dim. Page |
|---|---|---|---|---|---|---|---|---|---|---|---|---|
| **0.33** | 389 | 47 | 8.6 | III | 4.40 | 754 | 666 | | | **SK 02040 - 71S/4** | 31 | 622 |
| | 336 | 55 | 7.7 | III | 5.09 | 790 | 704 | | | | | |
| | 258 | 71 | 6.7 | III | 6.63 | 855 | 776 | | | | | |
| | 228 | 81 | 6.2 | III | 7.51 | 864 | 812 | | | | | |
| | 194 | 92 | 6.3 | III | 8.82 | 864 | 900 | | | | | |
| | 168 | 106 | 5.7 | III | 10.20 | 864 | 900 | | | | | |
| | 129 | 136 | 4.7 | III | 13.27 | 862 | 900 | | | | | |
| | 114 | 152 | 4.4 | III | 15.03 | 862 | 900 | | | | | |
| | 100 | 173 | 4.0 | III | 17.10 | 860 | 900 | | | | | |
| | 87 | 198 | 3.6 | III | 19.56 | 860 | 900 | | | | | |
| | 78 | 203 | 3.2 | III | 21.95 | 860 | 900 | | | | | |
| | 60 | 261 | 2.5 | III | 28.55 | 855 | 900 | | | | | |
| | 53 | 292 | 2.4 | III | 32.34 | 853 | 900 | | | | | |
| | 46 | 332 | 2.2 | III | 36.80 | 848 | 900 | | | | | |
| | 41 | 374 | 2.0 | III | 42.08 | 844 | 900 | | | | | |
| | 38 | 333 | 2.2 | III | 44.85 | 848 | 900 | | | | | |
| | 37 | 457 | 1.9 | II | 46.79 | 833 | 900 | | | | | |
| | 33 | 378 | 1.9 | II | 51.87 | 842 | 900 | | | | | |
| | 29 | 584 | 1.5 | II | 59.83 | 810 | 900 | | | | | |
| | 25 | 475 | 1.5 | II | 67.47 | 830 | 900 | | | | | |
| | 22 | 529 | 1.4 | II | 76.44 | 821 | 900 | | | | | |
| | 20 | 591 | 1.3 | I | 86.97 | 810 | 900 | | | | | |
| | 17 | 676 | 1.2 | I | 99.45 | 792 | 900 | | | | | |
| | 17 | 858 | 1.0 | I | 100.65 | 743 | 900 | | | | | |
| | 15 | 768 | 1.1 | I | 115.05 | 770 | 900 | | | | | |
| | 13 | 1081 | 0.8 | * | 128.70 | 659 | 900 | | | | | |
| | 42 | 379 | 3.6 | III | 40.95 | 1262 | 1800 | 1361 | 1800 | **SK 02050 - 71S/4** | 47 | 626 |
| | 34 | 463 | 3.0 | III | 50.63 | 1280 | 1800 | 1361 | 1800 | | | |
| | 30 | 518 | 2.9 | III | 57.38 | 1278 | 1800 | 1361 | 1800 | | | |
| | 26 | 581 | 2.6 | III | 65.25 | 1274 | 1800 | 1361 | 1800 | | | |
| | 21 | 587 | 2.5 | III | 80.58 | 1274 | 1800 | 1361 | 1800 | | | |
| | 18 | 665 | 2.2 | III | 92.82 | 1267 | 1800 | 1361 | 1800 | | | |
| | 15 | 808 | 1.8 | II | 114.75 | 1251 | 1800 | 1361 | 1800 | | | |
| | 13 | 900 | 1.7 | II | 130.05 | 1240 | 1800 | 1361 | 1800 | | | |
| | 12 | 1005 | 1.5 | II | 147.90 | 1226 | 1800 | 1361 | 1800 | | | |
| | 10 | 1450 | 1.1 | I | 170.10 | 1148 | 1800 | 1361 | 1800 | | | |
| | 8.8 | 1632 | 1.0 | I | 194.18 | 1105 | 1800 | 1361 | 1800 | | | |
| | 7.4 | 1944 | 0.8 | * | 231.41 | 1015 | 1800 | 1361 | 1800 | | | |
| | 41 | 438 | 2.2 | III | 41.74 | 1220 | 1742 | 1361 | 1800 | **SK 13050 - 71S/4** | 58 | 630 |
| | 36 | 499 | 2.0 | III | 48.08 | 1267 | 1800 | 1361 | 1800 | | | |
| | 29 | 617 | 1.9 | II | 59.44 | 1269 | 1800 | 1361 | 1800 | | | |
| | 25 | 699 | 1.6 | II | 67.37 | 1262 | 1800 | 1361 | 1800 | | | |
| | 22 | 795 | 1.6 | II | 76.61 | 1253 | 1800 | 1361 | 1800 | | | |
| | 20 | 841 | 1.9 | II | 86.15 | 1249 | 1800 | 1361 | 1800 | | | |
| | 17 | 969 | 1.7 | II | 99.23 | 1233 | 1800 | 1361 | 1800 | | | |
| | 14 | 1182 | 1.5 | II | 122.68 | 1199 | 1800 | 1361 | 1800 | | | |
| | 12 | 1340 | 1.3 | I | 139.04 | 1170 | 1800 | 1361 | 1800 | | | |
| | 11 | 1524 | 1.1 | I | 158.12 | 1132 | 1800 | 1361 | 1800 | | | |
| | 9.4 | 1526 | 1.1 | I | 181.66 | 1132 | 1800 | 1361 | 1800 | | | |
| | 8.2 | 1758 | 1.0 | I | 209.25 | 1071 | 1800 | 1361 | 1800 | | | |

(AGMA Class I = $f_B$ 1.0 - 1.39 II = $f_B$ 1.4 - 1.99 III = $f_B$ ≥ 2.0 * = $f_B$ < 1.0)




Send Quote Requests to info@automatedpt.com
Call +1(800)985-6929 To Order or Order Online At Nordgearmotors.com

# 0.33 hp Gearmotors

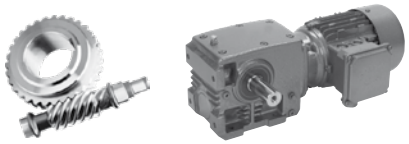

DRIVESYSTEMS

| Motor Power $P_n$ [hp] | Output Speed $n_2$ [rpm] | Output Torque $T_2$ [lb-in] | Service Factor $f_B$ | AGMA Class | Gear Ratio $i_{tot}$ | Standard Bearings $F_{RN}$ OHL [lb] | Standard Bearings $F_{AN}$ Thrust [lb] | Heavy Duty Bearings (VL) $F_{RVL}$ OHL [lb] | Heavy Duty Bearings (VL) $F_{AVL}$ Thrust [lb] | Model Type | Weight [lb] | Dim. Page |
|---|---|---|---|---|---|---|---|---|---|---|---|---|
| 0.33 | 25 | 625 | 4.2 | III | 68.37 | 1789 | 1721 | 2468 | 2250 | SK 12063 - 71S/4 | 56 | 634 |
| | 22 | 698 | 3.9 | III | 77.40 | 1784 | 1721 | 2466 | 2250 | | | |
| | 19 | 696 | 3.8 | III | 92.31 | 1784 | 1721 | 2466 | 2250 | | | |
| | 16 | 771 | 3.4 | III | 104.04 | 1782 | 1721 | 2464 | 2250 | | | |
| | 14 | 863 | 3.0 | III | 118.32 | 1778 | 1721 | 2459 | 2250 | | | |
| | 12 | 1017 | 2.6 | III | 144.33 | 1769 | 1721 | 2453 | 2250 | | | |
| | 11 | 1142 | 2.4 | III | 162.18 | 1760 | 1721 | 2446 | 2250 | | | |
| | 9.3 | 1270 | 2.3 | III | 183.60 | 1748 | 1721 | 2439 | 2250 | | | |
| | 8.7 | 1646 | 1.9 | II | 195.86◆ | 1712 | 1721 | 2414 | 2250 | | | |
| | 7.7 | 1875 | 1.7 | II | 223.17◆ | 1685 | 1721 | 2394 | 2250 | | | |
| | 6.5 | 2188 | 1.4 | II | 264.24◆ | 1643 | 1721 | 2365 | 2250 | | | |
| | 3.7 | 2870 | 1.1 | I | 464.61◆ | 1519 | 1721 | 2279 | 2250 | | | |
| | 3.2 | 3205 | 1.0 | I | 529.38◆ | 1440 | 1721 | 2228 | 2250 | | | |
| | 2.7 | 3795 | 0.8 | * | 626.79◆ | 1267 | 1721 | 2120 | 2250 | | | |
| | 26 | 677 | 2.2 | III | 65.20 | 1787 | 1721 | 2466 | 2250 | SK 13063 - 71S/4 | 67 | 638 |
| | 21 | 826 | 2.1 | III | 79.54 | 1780 | 1721 | 2462 | 2250 | | | |
| | 18 | 935 | 2.2 | III | 97.03 | 1773 | 1721 | 2457 | 2250 | | | |
| | 15 | 1099 | 2.1 | III | 114.04 | 1762 | 1721 | 2448 | 2250 | | | |
| | 13 | 1223 | 2.2 | III | 128.53 | 1753 | 1721 | 2441 | 2250 | | | |
| | 12 | 1391 | 2.1 | III | 146.17 | 1739 | 1721 | 2432 | 2250 | | | |
| | 9.6 | 1674 | 1.8 | II | 178.31 | 1710 | 1721 | 2412 | 2250 | | | |
| | 8.6 | 1671 | 1.9 | II | 198.86 | 1710 | 1721 | 2412 | 2250 | | | |
| | 7.6 | 1883 | 1.7 | II | 224.12 | 1685 | 1721 | 2394 | 2250 | | | |
| | 6.7 | 2110 | 1.6 | II | 254.89 | 1654 | 1721 | 2372 | 2250 | | | |
| | 5.5 | 2574 | 1.3 | I | 310.92 | 1577 | 1721 | 2320 | 2250 | | | |
| | 4.9 | 2892 | 1.2 | I | 349.37 | 1512 | 1721 | 2277 | 2250 | | | |
| | 4.3 | 3225 | 1.0 | I | 395.51 | 1433 | 1721 | 2225 | 2250 | | | |
| | 3.6 | 2914 | 1.2 | I | 471.70 | 1508 | 1721 | 2273 | 2250 | | | |
| | 3.2 | 3219 | 1.0 | I | 531.64 | 1436 | 1721 | 2225 | 2250 | | | |
| | 2.8 | 3661 | 0.9 | * | 604.62 | 1310 | 1721 | 2147 | 2250 | | | |
| | 2.3 | 4374 | 0.8 | * | 737.53 | 1031 | 1721 | 1989 | 2250 | | | |
| | 9.1 | 1365 | 4.3 | III | 187.17 | 2318 | 2025 | 2925 | 2700 | SK 12080 - 71S/4 | 78 | 642 |
| | 7.3 | 1652 | 3.8 | III | 234.60 | 2302 | 2025 | 2925 | 2700 | | | |
| | 6.2 | 2361 | 2.7 | III | 276.92◆ | 2252 | 2025 | 2925 | 2700 | | | |
| | 2.6 | 4058 | 1.5 | II | 656.88◆ | 2050 | 2025 | 2925 | 2700 | | | |
| | 5.7 | 2538 | 2.1 | III | 297.73 | 2237 | 2025 | 2925 | 2700 | SK 13080 - 71S/4 | 89 | 646 |
| | 5.0 | 2852 | 2.2 | III | 339.48 | 2207 | 2025 | 2925 | 2700 | | | |
| | 4.2 | 3388 | 2.0 | III | 403.20 | 2144 | 2025 | 2925 | 2700 | | | |
| | 3.5 | 3038 | 2.2 | III | 482.13 | 2187 | 2025 | 2925 | 2700 | | | |
| | 3.2 | 3416 | 2.0 | III | 542.07 | 2142 | 2025 | 2925 | 2700 | | | |
| | 2.7 | 3896 | 1.7 | II | 630.68 | 2075 | 2025 | 2925 | 2700 | | | |
| | 2.4 | 4276 | 1.6 | II | 706.25 | 2014 | 2025 | 2925 | 2700 | | | |
| | 2.1 | 4876 | 1.4 | II | 805.28 | 1901 | 2025 | 2925 | 2700 | | | |
| | 1.8 | 5673 | 1.2 | I | 956.44 | 1717 | 2025 | 2810 | 2700 | | | |
| | 1.4 | 6962 | 1.0 | I | 1198.81 | 1280 | 2025 | 2567 | 2700 | | | |

◆ **Non-Footed units only**

(AGMA Class I = $f_B$ 1.0 - 1.39 II = $f_B$ 1.4 - 1.99 III = $f_B$ ≥ 2.0 * = $f_B$ < 1.0)


Send Quote Requests to info@automatedpt.com
Call +1(800)985-6929 To Order or Order Online At Nordgearmotors.com

DRIVESYSTEMS

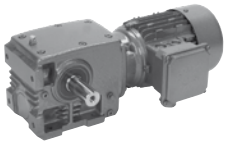



# 0.33 hp, 0.5 hp Gearmotors

| Motor Power $P_n$ [hp] | Output Speed $n_2$ [rpm] | Output Torque $T_2$ [lb-in] | Service Factor $f_B$ | AGMA Class | Gear Ratio $i_{tot}$ | Standard Bearings $F_{R\,N}$ OHL [lb] | Standard Bearings $F_{A\,N}$ Thrust [lb] | Heavy Duty Bearings (VL) $F_{R\,VL}$ OHL [lb] | Heavy Duty Bearings (VL) $F_{A\,VL}$ Thrust [lb] | Model Type | Weight [lb] | Dim. Page |
|---|---|---|---|---|---|---|---|---|---|---|---|---|
| **0.33** | 4.7 | 2526 | 5.3 | III | 365.07 | 3645 | 2700 | 3645 | 3600 | **SK 33100 - 71S/4** | 153 | 654 |
| | 3.7 | 3125 | 4.5 | III | 468.37 | 3645 | 2700 | 3645 | 3600 | | | |
| | 3.3 | 3401 | 4.1 | III | 519.31 | 3645 | 2700 | 3645 | 3600 | | | |
| | 2.6 | 4245 | 3.3 | III | 660.60 | 3645 | 2700 | 3645 | 3600 | | | |
| | 1.5 | 7115 | 2.0 | III | 1175.19 | 3645 | 2700 | 3645 | 3600 | | | |
| | 1.1 | 8942 | 1.6 | II | 1507.71 | 3539 | 2700 | 3645 | 3600 | | | |
| | 1.0 | 9915 | 1.4 | II | 1671.69 | 3400 | 2700 | 3645 | 3600 | | | |
| | 1.4 | 7701 | 3.6 | III | 1198.5 | 5963 | 4669 | 5963 | 6300 | **SK 43125 - 71S/4** | 261 | 662 |
| | 1.2 | 9305 | 2.9 | III | 1476.55 | 5963 | 4669 | 5963 | 6300 | | | |
| | 1.0 | 10129 | 2.7 | III | 1639.55 | 5963 | 4669 | 5963 | 6300 | | | |
| **0.5** | 391 | 71 | 5.7 | III | 4.40 | 738 | 637 | | | **SK 02040 - 71L/4** | 33 | 622 |
| | 338 | 81 | 5.2 | III | 5.09 | 772 | 671 | | | | | |
| | 259 | 105 | 4.6 | III | 6.63 | 833 | 734 | | | | | |
| | 229 | 119 | 4.2 | III | 7.51 | 862 | 765 | | | | | |
| | 195 | 135 | 4.3 | III | 8.82 | 862 | 875 | | | | | |
| | 169 | 156 | 3.9 | III | 10.20 | 862 | 900 | | | | | |
| | 130 | 200 | 3.2 | III | 13.27 | 860 | 900 | | | | | |
| | 114 | 224 | 3.0 | III | 15.03 | 857 | 900 | | | | | |
| | 101 | 255 | 2.7 | III | 17.10 | 855 | 900 | | | | | |
| | 88 | 292 | 2.4 | III | 19.56 | 853 | 900 | | | | | |
| | 78 | 299 | 2.2 | III | 21.95 | 851 | 900 | | | | | |
| | 60 | 384 | 1.7 | II | 28.55 | 842 | 900 | | | | | |
| | 53 | 429 | 1.6 | II | 32.34 | 837 | 900 | | | | | |
| | 47 | 488 | 1.5 | II | 36.80 | 828 | 900 | | | | | |
| | 41 | 551 | 1.4 | II | 42.08 | 817 | 900 | | | | | |
| | 38 | 489 | 1.5 | II | 44.85 | 828 | 900 | | | | | |
| | 37 | 672 | 1.3 | I | 46.79 | 792 | 900 | | | | | |
| | 33 | 556 | 1.3 | I | 51.87 | 817 | 900 | | | | | |
| | 29 | 859 | 1.0 | I | 59.83 | 743 | 900 | | | | | |
| | 25 | 699 | 1.0 | I | 67.47 | 785 | 900 | | | | | |
| | 23 | 778 | 1.0 | I | 76.44 | 765 | 900 | | | | | |
| | 20 | 870 | 0.9 | * | 86.97 | 738 | 900 | | | | | |
| | 17 | 994 | 0.8 | * | 99.45 | 695 | 900 | | | | | |
| | 72 | 362 | 3.8 | III | 24.01 | 1044 | 1505 | 1361 | 1800 | **SK 02050 - 71L/4** | 49 | 626 |
| | 63 | 406 | 3.4 | III | 27.21 | 1085 | 1573 | 1361 | 1800 | | | |
| | 56 | 461 | 3.0 | III | 30.94 | 1123 | 1649 | 1361 | 1800 | | | |
| | 48 | 491 | 2.8 | III | 35.55 | 1181 | 1800 | 1361 | 1800 | | | |
| | 42 | 558 | 2.5 | III | 40.95 | 1226 | 1800 | 1361 | 1800 | | | |
| | 34 | 681 | 2.0 | III | 50.63 | 1265 | 1800 | 1361 | 1800 | | | |
| | 30 | 762 | 2.0 | III | 57.38 | 1256 | 1800 | 1361 | 1800 | | | |
| | 26 | 854 | 1.7 | II | 65.25 | 1247 | 1800 | 1361 | 1800 | | | |
| | 21 | 864 | 1.7 | II | 80.58 | 1244 | 1800 | 1361 | 1800 | | | |
| | 19 | 979 | 1.5 | II | 92.82 | 1231 | 1800 | 1361 | 1800 | | | |
| | 15 | 1189 | 1.3 | I | 114.75 | 1199 | 1800 | 1361 | 1800 | | | |
| | 13 | 1324 | 1.1 | I | 130.05 | 1175 | 1800 | 1361 | 1800 | | | |
| | 12 | 1479 | 1.0 | I | 147.90 | 1141 | 1800 | 1361 | 1800 | | | |
| | 10 | 2134 | 0.8 | * | 170.10 | 947 | 1800 | 1361 | 1800 | | | |

(AGMA Class I = $f_B$ 1.0 - 1.39 II = $f_B$ 1.4 - 1.99 III = $f_B$ ≥ 2.0 * = $f_B$ < 1.0)




Send Quote Requests to info@automatedpt.com
Call +1(800)985-6929 To Order or Order Online At Nordgearmotors.com

# 0.5 hp Gearmotors

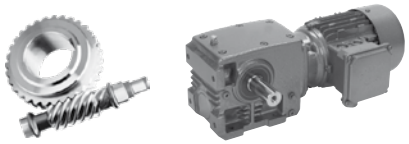

DRIVESYSTEMS

| Motor Power $P_n$ [hp] | Output Speed $n_2$ [rpm] | Output Torque $T_2$ [lb-in] | Service Factor $f_B$ | AGMA Class | Gear Ratio $i_{tot}$ | Standard Bearings $F_{RN}$ OHL [lb] | Standard Bearings $F_{AN}$ Thrust [lb] | Heavy Duty Bearings (VL) $F_{RVL}$ OHL [lb] | Heavy Duty Bearings (VL) $F_{AVL}$ Thrust [lb] | Model Type | Weight [lb] | Dim. Page |
|---|---|---|---|---|---|---|---|---|---|---|---|---|
| 0.5 | 39 | 606 | 3.7 | III | 43.86 | 1694 | 1721 | 2468 | 2250 | SK 12063 - 71L/4 | 58 | 634 |
| | 34 | 689 | 3.4 | III | 49.88 | 1760 | 1721 | 2466 | 2250 | | | |
| | 28 | 819 | 3.0 | III | 60.85 | 1780 | 1721 | 2462 | 2250 | | | |
| | 25 | 920 | 2.8 | III | 68.37 | 1773 | 1721 | 2457 | 2250 | | | |
| | 22 | 1027 | 2.6 | III | 77.40 | 1766 | 1721 | 2453 | 2250 | | | |
| | 19 | 1024 | 2.6 | III | 92.31 | 1766 | 1721 | 2453 | 2250 | | | |
| | 17 | 1135 | 2.3 | III | 104.04 | 1760 | 1721 | 2448 | 2250 | | | |
| | 15 | 1269 | 2.1 | III | 118.32 | 1748 | 1721 | 2439 | 2250 | | | |
| | 12 | 1496 | 1.8 | II | 144.33 | 1728 | 1721 | 2426 | 2250 | | | |
| | 11 | 1681 | 1.6 | II | 162.18 | 1710 | 1721 | 2412 | 2250 | | | |
| | 9.4 | 1869 | 1.5 | II | 183.60 | 1688 | 1721 | 2394 | 2250 | | | |
| | 8.8 | 2421 | 1.3 | I | 195.86◆ | 1604 | 1721 | 2338 | 2250 | | | |
| | 7.7 | 2759 | 1.2 | I | 223.17◆ | 1541 | 1721 | 2295 | 2250 | | | |
| | 4.2 | 3755 | 0.8 | * | 413.10◆ | 1280 | 1721 | 2129 | 2250 | | | |
| | 3.7 | 4224 | 0.8 | * | 464.61◆ | 1100 | 1721 | 2025 | 2250 | | | |
| | 14 | 1414 | 3.9 | III | 123.42 | 2315 | 2025 | 2925 | 2700 | SK 12080 - 71L/4 | 80 | 642 |
| | 12 | 1533 | 3.7 | III | 138.21 | 2309 | 2025 | 2925 | 2700 | | | |
| | 11 | 1719 | 3.4 | III | 157.59 | 2300 | 2025 | 2925 | 2700 | | | |
| | 9.2 | 2008 | 3.0 | III | 187.17 | 2279 | 2025 | 2925 | 2700 | | | |
| | 7.3 | 2431 | 2.6 | III | 234.60 | 2248 | 2025 | 2925 | 2700 | | | |
| | 6.2 | 3474 | 1.8 | II | 276.92◆ | 2133 | 2025 | 2925 | 2700 | | | |
| | 3.3 | 4823 | 1.3 | I | 520.20◆ | 1913 | 2025 | 2925 | 2700 | | | |
| | 2.6 | 5971 | 1.1 | I | 656.88◆ | 1634 | 2025 | 2761 | 2700 | | | |
| | 2.4 | 6292 | 1.1 | I | 706.25 | 1532 | 2025 | 2702 | 2700 | SK 13080 - 71L/4 | 91 | 646 |
| | 2.1 | 7174 | 0.9 | * | 805.28 | 1184 | 2025 | 2520 | 2700 | | | |
| | 1.8 | 8347 | 0.8 | * | 956.44 | | 2025 | 2212 | 2700 | | | |
| | 7.1 | 2634 | 4.8 | III | 241.50 | 3645 | 2700 | 3645 | 3600 | SK 32100 - 71L/4 | 137 | 650 |
| | 2.7 | 6098 | 2.1 | III | 645.00 | 3645 | 2700 | 3645 | 3600 | | | |
| | 6.7 | 3326 | 4.0 | III | 257.63 | 3645 | 2700 | 3645 | 3600 | SK 33100 - 71L/4 | 155 | 654 |
| | 5.7 | 3156 | 4.2 | III | 299.28 | 3645 | 2700 | 3645 | 3600 | | | |
| | 4.7 | 3717 | 3.6 | III | 365.07 | 3645 | 2700 | 3645 | 3600 | | | |
| | 3.7 | 4598 | 3.1 | III | 468.37 | 3645 | 2700 | 3645 | 3600 | | | |
| | 3.3 | 5004 | 2.8 | III | 519.31 | 3645 | 2700 | 3645 | 3600 | | | |
| | 2.6 | 6245 | 2.3 | III | 660.60 | 3645 | 2700 | 3645 | 3600 | | | |
| | 1.5 | 10469 | 1.3 | I | 1175.19 | 3312 | 2700 | 3645 | 3600 | | | |
| | 1.1 | 13158 | 1.1 | I | 1507.71 | 2759 | 2700 | 3645 | 3600 | | | |
| | 1.0 | 14589 | 1.0 | I | 1671.69 | 2347 | 2700 | 3645 | 3600 | | | |
| | 1.4 | 11331 | 2.4 | III | 1198.50 | 5963 | 4669 | 5963 | 6300 | SK 43125 - 71L/4 | 263 | 662 |
| | 1.2 | 13691 | 2.0 | III | 1476.55 | 5963 | 4669 | 5963 | 6300 | | | |
| | 1.0 | 14904 | 1.8 | II | 1639.55 | 5963 | 4669 | 5963 | 6300 | | | |

◆ **Non-Footed units only**

(AGMA Class I = $f_B$ 1.0 - 1.39 II = $f_B$ 1.4 - 1.99 III = $f_B$ ≥ 2.0 * = $f_B$ < 1.0)


Send Quote Requests to info@automatedpt.com
Call +1(800)985-6929 To Order or Order Online At Nordgearmotors.com

DRIVESYSTEMS

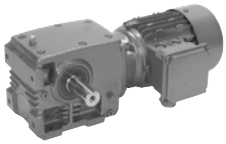



# 0.75 hp Gearmotors

| Motor Power $P_n$ [hp] | Output Speed $n_2$ [rpm] | Output Torque $T_2$ [lb-in] | Service Factor $f_B$ | AGMA Class | Gear Ratio $i_{tot}$ | Standard Bearings $F_{R\,N}$ OHL [lb] | Standard Bearings $F_{A\,N}$ Thrust [lb] | Heavy Duty Bearings (VL) $F_{R\,VL}$ OHL [lb] | Heavy Duty Bearings (VL) $F_{A\,VL}$ Thrust [lb] | Model Type | Weight [lb] | Dim. Page |
|---|---|---|---|---|---|---|---|---|---|---|---|---|
| 0.75 | 389 | 107 | 3.8 | III | 4.40 | 720 | 594 | | | SK 02040 - 80S/4 | 37 | 622 |
| | 336 | 124 | 3.4 | III | 5.09 | 749 | 619 | | | | | |
| | 258 | 160 | 3.0 | III | 6.63 | 806 | 666 | | | | | |
| | 228 | 181 | 2.8 | III | 7.51 | 830 | 686 | | | | | |
| | 194 | 205 | 2.8 | III | 8.82 | 860 | 824 | | | | | |
| | 168 | 237 | 2.5 | III | 10.20 | 857 | 864 | | | | | |
| | 129 | 305 | 2.1 | III | 13.27 | 851 | 900 | | | | | |
| | 114 | 341 | 1.9 | II | 15.03 | 846 | 900 | | | | | |
| | 100 | 388 | 1.8 | II | 17.10 | 842 | 900 | | | | | |
| | 87 | 444 | 1.6 | II | 19.56 | 835 | 900 | | | | | |
| | 78 | 456 | 1.4 | II | 21.95 | 833 | 900 | | | | | |
| | 60 | 585 | 1.1 | I | 28.55 | 810 | 900 | | | | | |
| | 53 | 653 | 1.1 | I | 32.34 | 797 | 900 | | | | | |
| | 46 | 744 | 1.0 | I | 36.80 | 774 | 900 | | | | | |
| | 41 | 839 | 0.9 | * | 42.08 | 749 | 900 | | | | | |
| | 38 | 745 | 1.0 | I | 44.85 | 774 | 900 | | | | | |
| | 37 | 1023 | 0.9 | * | 46.79 | 684 | 900 | | | | | |
| | 33 | 847 | 0.8 | * | 51.87 | 747 | 900 | | | | | |
| | 116 | 342 | 2.9 | III | 14.72 | 884 | 1204 | 1361 | 1800 | SK 02050 - 80S/4 | 53 | 626 |
| | 101 | 392 | 2.7 | III | 16.86 | 916 | 1256 | 1361 | 1800 | | | |
| | 88 | 446 | 2.9 | III | 19.42 | 956 | 1321 | 1361 | 1800 | | | |
| | 71 | 552 | 2.5 | III | 24.01 | 1010 | 1402 | 1361 | 1800 | | | |
| | 63 | 618 | 2.2 | III | 27.21 | 1042 | 1460 | 1361 | 1800 | | | |
| | 55 | 702 | 2.0 | III | 30.94 | 1078 | 1508 | 1361 | 1800 | | | |
| | 48 | 748 | 1.8 | II | 35.55 | 1130 | 1724 | 1361 | 1800 | | | |
| | 42 | 850 | 1.6 | II | 40.95 | 1172 | 1800 | 1361 | 1800 | | | |
| | 34 | 1037 | 1.3 | I | 50.63 | 1222 | 1800 | 1361 | 1800 | | | |
| | 30 | 1159 | 1.3 | I | 57.38 | 1204 | 1800 | 1361 | 1800 | | | |
| | 26 | 1300 | 1.1 | I | 65.25 | 1179 | 1800 | 1361 | 1800 | | | |
| | 21 | 1316 | 1.1 | I | 80.58 | 1175 | 1800 | 1361 | 1800 | | | |
| | 18 | 1490 | 1.0 | I | 92.82 | 1139 | 1800 | 1361 | 1800 | | | |
| | 15 | 1810 | 0.8 | * | 114.75 | 1058 | 1800 | 1361 | 1800 | | | |
| | 77 | 519 | 4.2 | III | 22.32 | 1350 | 1721 | 2471 | 2250 | SK 12063 - 80S/4 | 62 | 634 |
| | 68 | 585 | 3.7 | III | 25.15 | 1395 | 1721 | 2468 | 2250 | | | |
| | 60 | 657 | 3.3 | III | 28.61 | 1451 | 1721 | 2466 | 2250 | | | |
| | 49 | 792 | 2.9 | III | 34.89 | 1535 | 1721 | 2462 | 2250 | | | |
| | 44 | 829 | 2.6 | III | 38.92 | 1593 | 1721 | 2462 | 2250 | | | |
| | 39 | 923 | 2.4 | III | 43.86 | 1654 | 1721 | 2457 | 2250 | | | |
| | 34 | 1049 | 2.2 | III | 49.88 | 1708 | 1721 | 2453 | 2250 | | | |
| | 28 | 1246 | 2.0 | III | 60.85 | 1751 | 1721 | 2441 | 2250 | | | |
| | 25 | 1400 | 1.9 | II | 68.37 | 1737 | 1721 | 2432 | 2250 | | | |
| | 22 | 1564 | 1.7 | II | 77.40 | 1721 | 1721 | 2421 | 2250 | | | |
| | 19 | 1559 | 1.7 | II | 92.31 | 1721 | 1721 | 2421 | 2250 | | | |
| | 16 | 1728 | 1.5 | II | 104.04 | 1703 | 1721 | 2408 | 2250 | | | |
| | 14 | 1932 | 1.4 | II | 118.32 | 1679 | 1721 | 2390 | 2250 | | | |
| | 12 | 2277 | 1.2 | I | 144.33 | 1629 | 1721 | 2354 | 2250 | | | |
| | 11 | 2559 | 1.1 | I | 162.18 | 1580 | 1721 | 2322 | 2250 | | | |
| | 9.3 | 2846 | 1.0 | I | 183.60 | 1523 | 1721 | 2284 | 2250 | | | |

(AGMA Class I = $f_B$ 1.0 - 1.39 II = $f_B$ 1.4 - 1.99 III = $f_B$ ≥ 2.0 * = $f_B$ < 1.0)


Send Quote Requests to info@automatedpt.com
Call +1(800)985-6929 To Order or Order Online At Nordgearmotors.com

# 0.75 hp, 1.0 hp Gearmotors

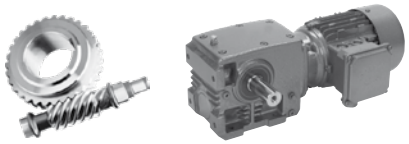

DRIVESYSTEMS

| Motor Power $P_n$ [hp] | Output Speed $n_2$ [rpm] | Output Torque $T_2$ [lb-in] | Service Factor $f_B$ | AGMA Class | Gear Ratio $i_{tot}$ | Standard Bearings $F_{RN}$ OHL [lb] | Standard Bearings $F_{AN}$ Thrust [lb] | Heavy Duty Bearings (VL) $F_{RVL}$ OHL [lb] | Heavy Duty Bearings (VL) $F_{AVL}$ Thrust [lb] | Model Type | Weight [lb] | Dim. Page |
|---|---|---|---|---|---|---|---|---|---|---|---|---|
| **0.75** | 33 | 1138 | 4.5 | III | 52.03 | 2158 | 2025 | 2925 | 2700 | **SK 12080 - 80S/4** | 84 | 642 |
| | 29 | 1258 | 4.2 | III | 58.27 | 2232 | 2025 | 2925 | 2700 | | | |
| | 26 | 1416 | 3.9 | III | 66.44 | 2315 | 2025 | 2925 | 2700 | | | |
| | 22 | 1660 | 3.5 | III | 78.91 | 2302 | 2025 | 2925 | 2700 | | | |
| | 18 | 1697 | 2.9 | III | 94.35 | 2300 | 2025 | 2925 | 2700 | | | |
| | 16 | 1879 | 2.8 | III | 106.08 | 2288 | 2025 | 2925 | 2700 | | | |
| | 14 | 2152 | 2.5 | III | 123.42 | 2270 | 2025 | 2925 | 2700 | | | |
| | 12 | 2334 | 2.4 | III | 138.21 | 2255 | 2025 | 2925 | 2700 | | | |
| | 11 | 2617 | 2.3 | III | 157.59 | 2230 | 2025 | 2925 | 2700 | | | |
| | 9.1 | 3057 | 1.9 | II | 187.17 | 2185 | 2025 | 2925 | 2700 | | | |
| | 7.3 | 3701 | 1.7 | II | 234.60 | 2104 | 2025 | 2925 | 2700 | | | |
| | 4.2 | 5799 | 1.1 | I | 402.90◆ | 1681 | 2025 | 2790 | 2700 | | | |
| | 3.3 | 7343 | 0.9 | * | 520.20◆ | 1096 | 2025 | 2482 | 2700 | | | |
| | 10 | 2932 | 4.0 | III | 165.50 | 3645 | 2700 | 3645 | 3600 | **SK 32100 - 80S/4** | 141 | 654 |
| | 9.3 | 3200 | 3.8 | III | 183.50 | 3645 | 2700 | 3645 | 3600 | | | |
| | 7.1 | 4011 | 3.1 | III | 241.50 | 3645 | 2700 | 3645 | 3600 | | | |
| | 3.4 | 7623 | 1.6 | II | 510.00 | 3645 | 2700 | 3645 | 3600 | | | |
| | 2.7 | 9283 | 1.4 | II | 645.00 | 3494 | 2700 | 3645 | 3600 | | | |
| | 6.6 | 5063 | 2.6 | III | 257.63 | 3645 | 2700 | 3645 | 3600 | **SK 33100 - 80S/4** | 159 | 654 |
| | 5.7 | 4804 | 2.8 | III | 299.28 | 3645 | 2700 | 3645 | 3600 | | | |
| | 4.7 | 5659 | 2.4 | III | 365.07 | 3645 | 2700 | 3645 | 3600 | | | |
| | 3.7 | 7000 | 2.0 | III | 468.37 | 3645 | 2700 | 3645 | 3600 | | | |
| | 3.3 | 7618 | 1.8 | II | 519.31 | 3645 | 2700 | 3645 | 3600 | | | |
| | 2.6 | 9508 | 1.5 | II | 660.60 | 3461 | 2700 | 3645 | 3600 | | | |
| | 4.5 | 7475 | 3.1 | III | 380.39 | 5963 | 4669 | 5963 | 6300 | **SK 43125 - 80S/4** | 267 | 662 |
| | 3.8 | 8610 | 3.1 | III | 444.38 | 5963 | 4669 | 5963 | 6300 | | | |
| | 3.1 | 10456 | 2.6 | III | 547.47 | 5963 | 4669 | 5963 | 6300 | | | |
| | 2.8 | 11610 | 2.0 | III | 607.91 | 5963 | 4669 | 5963 | 6300 | | | |
| | 2.5 | 13171 | 1.9 | II | 689.67 | 5963 | 4669 | 5963 | 6300 | | | |
| | 2.2 | 11876 | 2.3 | III | 794.58 | 5963 | 4669 | 5963 | 6300 | | | |
| | 1.8 | 13617 | 2.0 | III | 928.25 | 5963 | 4669 | 5963 | 6300 | | | |
| | 1.4 | 17250 | 1.6 | II | 1198.50 | 5963 | 4669 | 5963 | 6300 | | | |
| | 1.2 | 20843 | 1.3 | I | 1476.55 | 5769 | 4669 | 5963 | 6300 | | | |
| | 1.0 | 22690 | 1.2 | I | 1639.55 | 5567 | 4669 | 5963 | 6300 | | | |
| **1.0** | 375 | 148 | 2.8 | III | 4.40 | 707 | 554 | | | **SK 02040 - 80L/4** | 39 | 622 |
| | 324 | 172 | 2.5 | III | 5.09 | 731 | 572 | | | **SK 02040 - 80LH/4** | | |
| | 249 | 222 | 2.2 | III | 6.63 | 781 | 601 | | | | | |
| | 220 | 251 | 2.0 | III | 7.51 | 801 | 612 | | | | | |
| | 187 | 285 | 2.0 | III | 8.82 | 853 | 781 | | | | | |
| | 162 | 329 | 1.8 | II | 10.20 | 848 | 806 | | | | | |
| | 124 | 423 | 1.5 | II | 13.27 | 837 | 857 | | | | | |
| | 110 | 473 | 1.4 | II | 15.03 | 830 | 882 | | | | | |
| | 96 | 539 | 1.3 | I | 17.10 | 819 | 900 | | | | | |
| | 84 | 616 | 1.1 | I | 19.56 | 803 | 900 | | | | | |
| | 75 | 632 | 1.0 | I | 21.95 | 801 | 900 | | | | | |
| | 58 | 812 | 0.8 | * | 28.55 | 756 | 900 | | | | | |
| | 51 | 907 | 0.8 | * | 32.34 | 727 | 900 | | | | | |

◆ **Non-Footed units only**

(AGMA Class I = $f_B$ 1.0 - 1.39 II = $f_B$ 1.4 - 1.99 III = $f_B$ ≥ 2.0 * = $f_B$ < 1.0) **(Model Type in blue is an Energy Efficient motor)**


Send Quote Requests to info@automatedpt.com
Call +1(800)985-6929 To Order or Order Online At Nordgearmotors.com

DRIVESYSTEMS

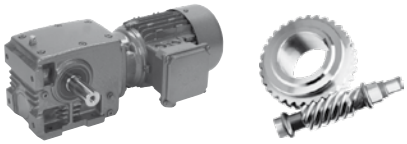

# 1.0 hp Gearmotors

| Motor Power $P_n$ [hp] | Output Speed $n_2$ [rpm] | Output Torque $T_2$ [lb-in] | Service Factor $f_B$ | AGMA Class | Gear Ratio $i_{tot}$ | Standard Bearings $F_{R\,N}$ OHL [lb] | Standard Bearings $F_{A\,N}$ Thrust [lb] | Heavy Duty Bearings (VL) $F_{R\,VL}$ OHL [lb] | Heavy Duty Bearings (VL) $F_{A\,VL}$ Thrust [lb] | Model Type | Weight [lb] | Dim. Page |
|---|---|---|---|---|---|---|---|---|---|---|---|---|
| 1.0 | 231 | 244 | 3.4 | III | 7.13 | 689 | 810 | 1361 | 1800 | **SK 02050 - 80L/4** | 55 | 626 |
| | 202 | 276 | 3.3 | III | 8.17 | 713 | 844 | 1361 | 1800 | SK 02050 - 80LH/4 | | |
| | 175 | 318 | 3.1 | III | 9.41 | 738 | 869 | 1361 | 1800 | | | |
| | 142 | 393 | 2.5 | III | 11.63 | 779 | 909 | 1361 | 1800 | | | |
| | 125 | 441 | 2.4 | III | 13.18 | 801 | 934 | 1361 | 1800 | | | |
| | 112 | 475 | 2.1 | III | 14.72 | 866 | 1148 | 1361 | 1800 | | | |
| | 98 | 544 | 2.0 | III | 16.86 | 898 | 1193 | 1361 | 1800 | | | |
| | 85 | 619 | 2.1 | III | 19.42 | 929 | 1242 | 1361 | 1800 | | | |
| | 69 | 766 | 1.8 | II | 24.01 | 979 | 1307 | 1361 | 1800 | | | |
| | 61 | 857 | 1.6 | II | 27.21 | 1006 | 1348 | 1361 | 1800 | | | |
| | 53 | 975 | 1.4 | II | 30.94 | 1037 | 1379 | 1361 | 1800 | | | |
| | 46 | 1038 | 1.3 | I | 35.55 | 1087 | 1634 | 1361 | 1800 | | | |
| | 40 | 1180 | 1.2 | I | 40.95 | 1123 | 1701 | 1361 | 1800 | | | |
| | 33 | 1439 | 1.0 | I | 50.63 | 1150 | 1791 | 1361 | 1800 | | | |
| | 29 | 1609 | 0.9 | * | 57.38 | 1112 | 1800 | 1361 | 1800 | | | |
| | 25 | 1805 | 0.8 | * | 65.25 | 1058 | 1800 | 1361 | 1800 | | | |
| | 20 | 1826 | 0.8 | * | 80.58 | 1053 | 1800 | 1361 | 1800 | | | |
| | 129 | 436 | 3.5 | III | 12.76 | 1112 | 1721 | 2432 | 2250 | **SK 12063 - 80L/4** | 64 | 634 |
| | 106 | 526 | 3.2 | III | 15.57 | 1172 | 1721 | 2471 | 2250 | SK 12063 - 80LH/4 | | |
| | 87 | 620 | 3.1 | III | 18.99 | 1274 | 1721 | 2468 | 2250 | | | |
| | 74 | 720 | 3.0 | III | 22.32 | 1334 | 1721 | 2464 | 2250 | | | |
| | 66 | 812 | 2.7 | III | 25.15 | 1382 | 1721 | 2462 | 2250 | | | |
| | 58 | 912 | 2.4 | III | 28.61 | 1429 | 1721 | 2457 | 2250 | | | |
| | 47 | 1099 | 2.1 | III | 34.89 | 1505 | 1721 | 2448 | 2250 | | | |
| | 42 | 1151 | 1.9 | II | 38.92 | 1564 | 1721 | 2446 | 2250 | | | |
| | 38 | 1281 | 1.7 | II | 43.86 | 1613 | 1721 | 2439 | 2250 | | | |
| | 33 | 1456 | 1.6 | II | 49.88 | 1667 | 1721 | 2428 | 2250 | | | |
| | 27 | 1730 | 1.4 | II | 60.85 | 1703 | 1721 | 2408 | 2250 | | | |
| | 24 | 1944 | 1.3 | I | 68.37 | 1676 | 1721 | 2387 | 2250 | | | |
| | 21 | 2171 | 1.2 | I | 77.40 | 1645 | 1721 | 2367 | 2250 | | | |
| | 18 | 2163 | 1.2 | I | 92.31 | 1647 | 1721 | 2367 | 2250 | | | |
| | 16 | 2398 | 1.1 | I | 104.04 | 1609 | 1721 | 2340 | 2250 | | | |
| | 14 | 2682 | 1.0 | I | 118.32 | 1557 | 1721 | 2306 | 2250 | | | |
| | 11 | 3160 | 0.8 | * | 144.33 | 1451 | 1721 | 2234 | 2250 | | | |
| | 10 | 3551 | 0.8 | * | 162.18 | 1343 | 1721 | 2167 | 2250 | | | |
| | 52 | 1042 | 3.5 | III | 31.92 | 1847 | 2025 | 2925 | 2700 | **SK 12080 - 80L/4** | 86 | 642 |
| | 44 | 1223 | 3.3 | III | 37.91 | 1935 | 2025 | 2925 | 2700 | SK 12080 - 80LH/4 | | |
| | 37 | 1374 | 3.5 | III | 44.72 | 2041 | 2025 | 2925 | 2700 | | | |
| | 32 | 1579 | 3.2 | III | 52.03 | 2129 | 2025 | 2925 | 2700 | | | |
| | 28 | 1746 | 3.0 | III | 58.27 | 2196 | 2025 | 2925 | 2700 | | | |
| | 25 | 1965 | 2.8 | III | 66.44 | 2284 | 2025 | 2925 | 2700 | | | |
| | 21 | 2304 | 2.5 | III | 78.91 | 2257 | 2025 | 2925 | 2700 | | | |
| | 17 | 2356 | 2.1 | III | 94.35 | 2252 | 2025 | 2925 | 2700 | | | |
| | 16 | 2608 | 2.0 | III | 106.08 | 2230 | 2025 | 2925 | 2700 | | | |
| | 13 | 2987 | 1.8 | II | 123.42 | 2192 | 2025 | 2925 | 2700 | | | |
| | 12 | 3239 | 1.8 | II | 138.21 | 2165 | 2025 | 2925 | 2700 | | | |
| | 10 | 3632 | 1.6 | II | 157.59 | 2113 | 2025 | 2925 | 2700 | | | |
| | 8.8 | 4242 | 1.4 | II | 187.17 | 2021 | 2025 | 2925 | 2700 | | | |
| | 7 | 5137 | 1.2 | I | 234.60 | 1845 | 2025 | 2891 | 2700 | | | |
| | 4.1 | 8049 | 0.8 | * | 402.90 ◆ | 578 | 2025 | 2300 | 2700 | | | |

◆ **Non-Footed units only**

(AGMA Class I = $f_B$ 1.0 - 1.39 II = $f_B$ 1.4 - 1.99 III = $f_B$ ≥ 2.0 * = $f_B$ < 1.0) **(Model Type in blue is an Energy Efficient motor)**




Send Quote Requests to info@automatedpt.com
Call +1(800)985-6929 To Order or Order Online At Nordgearmotors.com

# 1.0 hp, 1.5 hp Gearmotors

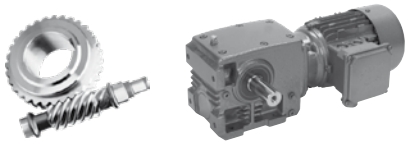

DRIVESYSTEMS

| Motor Power $P_n$ [hp] | Output Speed $n_2$ [rpm] | Output Torque $T_2$ [lb-in] | Service Factor $f_B$ | AGMA Class | Gear Ratio $i_{tot}$ | Standard Bearings $F_{RN}$ OHL [lb] | Standard Bearings $F_{AN}$ Thrust [lb] | Heavy Duty Bearings (VL) $F_{RVL}$ OHL [lb] | Heavy Duty Bearings (VL) $F_{AVL}$ Thrust [lb] | Model Type | Weight [lb] | Dim. Page |
|---|---|---|---|---|---|---|---|---|---|---|---|---|
| 1.0 | 18 | 2786 | 3.3 | III | 94.19 | 3074 | 2700 | 3645 | 3600 | **SK 32100 - 80L/4** | 143 | 654 |
| | 13 | 3320 | 3.3 | III | 129.00 | 3389 | 2700 | 3645 | 3600 | SK 32100 - 80LH/4 | | |
| | 10 | 4069 | 2.9 | III | 165.50 | 3638 | 2700 | 3645 | 3600 | | | |
| | 9.0 | 4441 | 2.7 | III | 183.50 | 3645 | 2700 | 3645 | 3600 | | | |
| | 6.8 | 5567 | 2.3 | III | 241.50 | 3645 | 2700 | 3645 | 3600 | | | |
| | 3.2 | 10580 | 1.2 | I | 510.00 | 3292 | 2700 | 3645 | 3600 | | | |
| | 2.6 | 12885 | 1.0 | I | 645.00 | 2826 | 2700 | 3645 | 3600 | | | |
| | 6.4 | 7027 | 1.9 | II | 257.63 | 3645 | 2700 | 3645 | 3600 | **SK 33100 - 80L/4** | 161 | 654 |
| | 5.5 | 6669 | 2.0 | III | 299.28 | 3645 | 2700 | 3645 | 3600 | SK 33100 - 80LH/4 | | |
| | 4.5 | 7854 | 1.7 | II | 365.07 | 3645 | 2700 | 3645 | 3600 | | | |
| | 3.5 | 9716 | 1.4 | II | 468.37 | 3431 | 2700 | 3645 | 3600 | | | |
| | 3.2 | 10574 | 1.3 | I | 519.31 | 3294 | 2700 | 3645 | 3600 | | | |
| | 2.5 | 13197 | 1.1 | I | 660.60 | 2747 | 2700 | 3645 | 3600 | | | |
| | 6.1 | 7565 | 3.3 | III | 269.76 | 5963 | 4669 | 5963 | 6300 | **SK 43125 - 80L/4** | 269 | 662 |
| | 5.1 | 8948 | 2.4 | III | 323.51 | 5963 | 4669 | 5963 | 6300 | SK 43125 - 80LH/4 | | |
| | 4.3 | 10376 | 2.2 | III | 380.39 | 5963 | 4669 | 5963 | 6300 | | | |
| | 3.7 | 11950 | 2.2 | III | 444.38 | 5963 | 4669 | 5963 | 6300 | | | |
| | 3.0 | 14512 | 1.9 | II | 547.47 | 5963 | 4669 | 5963 | 6300 | | | |
| | 2.7 | 16114 | 1.5 | II | 607.91 | 5963 | 4669 | 5963 | 6300 | | | |
| | 2.4 | 18282 | 1.4 | II | 689.67 | 5963 | 4669 | 5963 | 6300 | | | |
| | 2.1 | 16484 | 1.7 | II | 794.58 | 5963 | 4669 | 5963 | 6300 | | | |
| | 1.8 | 18900 | 1.4 | II | 928.25 | 5958 | 4669 | 5963 | 6300 | | | |
| | 1.4 | 23942 | 1.1 | I | 1198.5 | 5416 | 4669 | 5963 | 6300 | | | |
| | 1.1 | 28930 | 0.9 | * | 1476.55 | 4671 | 4669 | 5963 | 6300 | | | |
| | 1.0 | 31493 | 0.9 | * | 1639.55 | 4172 | 4669 | 5963 | 6300 | | | |
| | 0.89 | 35729 | 0.8 | * | 1860.07 | 3049 | 4669 | 5963 | 6300 | | | |
| 1.5 | 377 | 221 | 1.8 | II | 4.40 | 666 | 464 | | | **SK 02040 - 90S/4** | 46 | 622 |
| | 326 | 255 | 1.7 | II | 5.09 | 684 | 468 | | | SK 02040 - 90SH/4 | | |
| | 250 | 329 | 1.5 | II | 6.63 | 716 | 464 | | | | | |
| | 221 | 373 | 1.4 | II | 7.51 | 727 | 459 | | | | | |
| | 188 | 422 | 1.4 | II | 8.82 | 803 | 671 | | | | | |
| | 163 | 489 | 1.2 | I | 10.20 | 821 | 684 | | | | | |
| | 125 | 628 | 1.0 | I | 13.27 | 801 | 698 | | | | | |
| | 110 | 703 | 0.9 | * | 15.03 | 785 | 698 | | | | | |
| | 233 | 362 | 2.6 | III | 7.13 | 653 | 702 | 1361 | 1703 | **SK 02050 - 90S/4** | 62 | 626 |
| | 203 | 410 | 2.4 | III | 8.17 | 673 | 718 | 1361 | 1746 | SK 02050 - 90SH/4 | | |
| | 176 | 472 | 2.1 | III | 9.41 | 693 | 725 | 1361 | 1784 | | | |
| | 143 | 584 | 1.7 | II | 11.63 | 720 | 731 | 1361 | 1800 | | | |
| | 126 | 654 | 1.6 | II | 13.18 | 736 | 731 | 1361 | 1800 | | | |
| | 113 | 705 | 1.4 | II | 14.72 | 817 | 1019 | 1361 | 1800 | | | |
| | 98 | 808 | 1.3 | I | 16.86 | 842 | 1044 | 1361 | 1800 | | | |
| | 85 | 919 | 1.4 | II | 19.42 | 864 | 1076 | 1361 | 1800 | | | |
| | 69 | 1136 | 1.2 | I | 24.01 | 896 | 1100 | 1361 | 1800 | | | |
| | 61 | 1272 | 1.1 | I | 27.21 | 914 | 1109 | 1361 | 1800 | | | |
| | 54 | 1447 | 0.9 | * | 30.94 | 927 | 1109 | 1361 | 1800 | | | |
| | 47 | 1541 | 0.9 | * | 35.55 | 983 | 1415 | 1361 | 1800 | | | |
| | 41 | 1751 | 0.8 | * | 40.95 | 1001 | 1460 | 1361 | 1800 | | | |

(AGMA Class I = $f_B$ 1.0 - 1.39 II = $f_B$ 1.4 - 1.99 III = $f_B$ ≥ 2.0 * = $f_B$ < 1.0) **(Model Type in blue is an Energy Efficient motor)**


Send Quote Requests to info@automatedpt.com
Call +1(800)985-6929 To Order or Order Online At Nordgearmotors.com

DRIVESYSTEMS

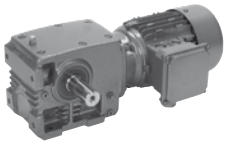



# 1.5 hp Gearmotors

| Motor Power $P_n$ [hp] | Output Speed $n_2$ [rpm] | Output Torque $T_2$ [lb-in] | Service Factor $f_B$ | AGMA Class | Gear Ratio $i_{tot}$ | Standard Bearings $F_{RN}$ OHL [lb] | Standard Bearings $F_{AN}$ Thrust [lb] | Heavy Duty Bearings (VL) $F_{RVL}$ OHL [lb] | Heavy Duty Bearings (VL) $F_{AVL}$ Thrust [lb] | Model Type | Weight [lb] | Dim. Page |
|---|---|---|---|---|---|---|---|---|---|---|---|---|
| 1.5 | 223 | 381 | 3.6 | III | 7.43 | 920 | 1348 | 2061 | 2250 | **SK 12063 - 90S/4** | 71 | 634 |
| | 196 | 435 | 3.4 | III | 8.47 | 956 | 1406 | 2138 | 2250 | SK 12063 - 90SH/4 | | |
| | 167 | 505 | 3.0 | III | 9.96 | 999 | 1476 | 2234 | 2250 | | | |
| | 148 | 569 | 2.7 | III | 11.22 | 1028 | 1526 | 2304 | 2250 | | | |
| | 130 | 648 | 2.5 | III | 12.76 | 1064 | 1577 | 2385 | 2250 | | | |
| | 107 | 781 | 2.2 | III | 15.57 | 1116 | 1658 | 2464 | 2250 | | | |
| | 87 | 920 | 2.1 | III | 18.99 | 1222 | 1721 | 2457 | 2250 | | | |
| | 74 | 1069 | 2.0 | III | 22.32 | 1276 | 1721 | 2450 | 2250 | | | |
| | 66 | 1205 | 1.8 | II | 25.15 | 1312 | 1721 | 2444 | 2250 | | | |
| | 58 | 1354 | 1.6 | II | 28.61 | 1352 | 1721 | 2435 | 2250 | | | |
| | 48 | 1631 | 1.4 | II | 34.89 | 1415 | 1721 | 2414 | 2250 | | | |
| | 43 | 1709 | 1.3 | I | 38.92 | 1472 | 1721 | 2410 | 2250 | | | |
| | 38 | 1901 | 1.2 | I | 43.86 | 1512 | 1721 | 2392 | 2250 | | | |
| | 33 | 2162 | 1.1 | I | 49.88 | 1548 | 1721 | 2367 | 2250 | | | |
| | 27 | 2568 | 1.0 | I | 60.85 | 1580 | 1721 | 2320 | 2250 | | | |
| | 24 | 2885 | 0.9 | * | 68.37 | 1514 | 1721 | 2277 | 2250 | | | |
| | 21 | 3222 | 0.8 | * | 77.40 | 1436 | 1721 | 2225 | 2250 | | | |
| | 18 | 3211 | 0.8 | * | 92.31 | 1438 | 1721 | 2228 | 2250 | | | |
| | 118 | 719 | 3.8 | III | 14.01 | 1382 | 1973 | 2925 | 2700 | **SK 12080 - 90S/4** | 93 | 642 |
| | 104 | 811 | 3.6 | III | 15.98 | 1427 | 2025 | 2925 | 2700 | SK 12080 - 90SH/4 | | |
| | 87 | 948 | 4.2 | III | 19.11 | 1541 | 2025 | 2925 | 2700 | | | |
| | 77 | 1066 | 3.9 | III | 21.49 | 1591 | 2025 | 2925 | 2700 | | | |
| | 66 | 1226 | 3.5 | III | 25.00 | 1663 | 2025 | 2925 | 2700 | | | |
| | 59 | 1357 | 3.3 | III | 27.99 | 1712 | 2025 | 2925 | 2700 | | | |
| | 52 | 1547 | 3.0 | III | 31.92 | 1775 | 2025 | 2925 | 2700 | | | |
| | 44 | 1816 | 2.7 | III | 37.91 | 1852 | 2025 | 2925 | 2700 | | | |
| | 37 | 2040 | 2.4 | III | 44.72 | 1949 | 2025 | 2925 | 2700 | | | |
| | 32 | 2344 | 2.2 | III | 52.03 | 2025 | 2025 | 2925 | 2700 | | | |
| | 28 | 2592 | 2.0 | III | 58.27 | 2079 | 2025 | 2925 | 2700 | | | |
| | 25 | 2917 | 1.9 | II | 66.44 | 2144 | 2025 | 2925 | 2700 | | | |
| | 21 | 3420 | 1.7 | II | 78.91 | 2142 | 2025 | 2925 | 2700 | | | |
| | 18 | 3497 | 1.4 | II | 94.35 | 2131 | 2025 | 2925 | 2700 | | | |
| | 16 | 3871 | 1.3 | I | 106.08 | 2079 | 2025 | 2925 | 2700 | | | |
| | 13 | 4434 | 1.2 | I | 123.42 | 1987 | 2025 | 2925 | 2700 | | | |
| | 12 | 4808 | 1.2 | I | 138.21 | 1915 | 2025 | 2925 | 2700 | | | |
| | 11 | 5392 | 1.1 | I | 157.59 | 1787 | 2025 | 2855 | 2700 | | | |
| | 8.9 | 6297 | 0.9 | * | 187.17 | 1532 | 2025 | 2702 | 2700 | | | |
| | 7.1 | 7625 | 0.8 | * | 234.6 | 929 | 2025 | 2412 | 2700 | | | |
| | 33 | 2352 | 4.2 | III | 50.31 | 2473 | 2700 | 3645 | 3600 | **SK 32100 - 90S/4** | 150 | 654 |
| | 26 | 2945 | 3.6 | III | 64.55 | 2644 | 2700 | 3645 | 3600 | SK 32100 - 90SH/4 | | |
| | 23 | 3224 | 3.3 | III | 71.57 | 2718 | 2700 | 3645 | 3600 | | | |
| | 18 | 4136 | 2.8 | III | 94.19 | 2912 | 2700 | 3645 | 3600 | | | |
| | 16 | 4092 | 2.5 | III | 104.0 | 3038 | 2700 | 3645 | 3600 | | | |
| | 13 | 4929 | 2.2 | III | 129.0 | 3215 | 2700 | 3645 | 3600 | | | |
| | 10 | 6040 | 1.9 | II | 165.5 | 3416 | 2700 | 3645 | 3600 | | | |
| | 9.0 | 6592 | 1.8 | II | 183.5 | 3492 | 2700 | 3645 | 3600 | | | |
| | 6.9 | 8263 | 1.5 | II | 241.5 | 3627 | 2700 | 3645 | 3600 | | | |
| | 5.5 | 10401 | 1.2 | I | 304.0 | 3323 | 2700 | 3645 | 3600 | | | |
| | 4.0 | 12859 | 0.9 | * | 410.0 | 2833 | 2700 | 3645 | 3600 | | | |
| | 3.3 | 15704 | 0.8 | * | 510.0 | 1928 | 2700 | 3645 | 3600 | | | |

(AGMA Class I = $f_B$ 1.0 - 1.39 II = $f_B$ 1.4 - 1.99 III = $f_B$ ≥ 2.0 * = $f_B$ < 1.0) **(Model Type in blue is an Energy Efficient motor)**




Send Quote Requests to info@automatedpt.com
Call +1(800)985-6929 To Order or Order Online At Nordgearmotors.com

# 1.5 hp, 2.0 hp Gearmotors

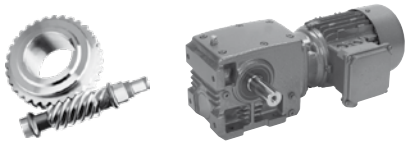

DRIVESYSTEMS

| Motor Power $P_n$ [hp] | Output Speed $n_2$ [rpm] | Output Torque $T_2$ [lb-in] | Service Factor $f_B$ | AGMA Class | Gear Ratio $i_{tot}$ | Standard Bearings $F_{RN}$ OHL [lb] | Standard Bearings $F_{AN}$ Thrust [lb] | Heavy Duty Bearings (VL) $F_{RVL}$ OHL [lb] | Heavy Duty Bearings (VL) $F_{AVL}$ Thrust [lb] | Model Type | Weight [lb] | Dim. Page |
|---|---|---|---|---|---|---|---|---|---|---|---|---|
| 1.5 | 14 | 4824 | 4.1 | III | 117.50 | 5605 | 4669 | 5963 | 6300 | **SK 42125 - 90S/4** | 238 | 658 |
| | 11 | 5778 | 3.7 | III | 144.76 | 5958 | 4669 | 5963 | 6300 | SK 42125 - 90SH/4 | | |
| | 10 | 6325 | 3.5 | III | 160.74 | 5963 | 4669 | 5963 | 6300 | | | |
| | 9.1 | 7071 | 3.2 | III | 182.36 | 5963 | 4669 | 5963 | 6300 | | | |
| | 8.2 | 7703 | 3.0 | III | 201.63 | 5963 | 4669 | 5963 | 6300 | | | |
| | 3.3 | 16117 | 1.6 | II | 495.85 | 5963 | 4669 | 5963 | 6300 | | | |
| | 2.4 | 21816 | 1.2 | I | 695.60 | 5666 | 4669 | 5963 | 6300 | | | |
| | 7.0 | 9983 | 2.5 | III | 236.58 | 5963 | 4669 | 5963 | 6300 | **SK 43125 - 90S/4** | 276 | 662 |
| | 6.2 | 11229 | 2.2 | III | 269.76 | 5963 | 4669 | 5963 | 6300 | SK 43125 - 90SH/4 | | |
| | 5.1 | 13282 | 1.6 | II | 323.51 | 5963 | 4669 | 5963 | 6300 | | | |
| | 4.4 | 15401 | 1.5 | II | 380.39 | 5963 | 4669 | 5963 | 6300 | | | |
| | 3.7 | 17738 | 1.5 | II | 444.38 | 5963 | 4669 | 5963 | 6300 | | | |
| | 3.0 | 21541 | 1.3 | I | 547.47 | 5697 | 4669 | 5963 | 6300 | | | |
| | 2.7 | 23919 | 1.0 | I | 607.91 | 5418 | 4669 | 5963 | 6300 | | | |
| | 2.4 | 27136 | 0.9 | * | 689.67 | 4968 | 4669 | 5963 | 6300 | | | |
| | 2.1 | 24467 | 1.1 | I | 794.58 | 5348 | 4669 | 5963 | 6300 | | | |
| | 1.8 | 28054 | 1.0 | I | 928.25 | 4822 | 4669 | 5963 | 6300 | | | |
| | 1.4 | 35538 | 0.8 | * | 1198.5 | 3112 | 4669 | 5963 | 6300 | | | |
| 2.0 | 233 | 482 | 1.9 | II | 7.13 | 617 | 596 | 1361 | 1602 | **SK 02050 - 90L/4** | 66 | 626 |
| | 203 | 545 | 1.8 | II | 8.17 | 632 | 592 | 1361 | 1629 | SK 02050 - 90LH/4 | | |
| | 176 | 628 | 1.5 | II | 9.41 | 646 | 585 | 1361 | 1649 | | | |
| | 143 | 776 | 1.3 | I | 11.63 | 641 | 556 | 1361 | 1665 | | | |
| | 126 | 870 | 1.2 | I | 13.18 | 612 | 529 | 1361 | 1670 | | | |
| | 113 | 938 | 1.1 | I | 14.72 | 767 | 896 | 1361 | 1800 | | | |
| | 98 | 1074 | 1.0 | I | 16.86 | 781 | 900 | 1361 | 1800 | | | |
| | 85 | 1223 | 1.0 | I | 19.42 | 799 | 909 | 1361 | 1800 | | | |
| | 69 | 1512 | 0.9 | * | 24.01 | 812 | 889 | 1361 | 1800 | | | |
| | 61 | 1693 | 0.8 | * | 27.21 | 821 | 869 | 1361 | 1800 | | | |
| | 223 | 507 | 2.7 | III | 7.43 | 896 | 1269 | 2039 | 2194 | **SK 12063 - 90L/4** | 75 | 634 |
| | 196 | 578 | 2.5 | III | 8.47 | 925 | 1307 | 2106 | 2250 | SK 12063 - 90LH/4 | | |
| | 167 | 672 | 2.2 | III | 9.96 | 961 | 1364 | 2198 | 2250 | | | |
| | 148 | 758 | 2.0 | III | 11.22 | 990 | 1393 | 2266 | 2250 | | | |
| | 130 | 862 | 1.8 | II | 12.76 | 1017 | 1433 | 2340 | 2250 | | | |
| | 107 | 1039 | 1.6 | II | 15.57 | 1058 | 1476 | 2453 | 2250 | | | |
| | 87 | 1225 | 1.6 | II | 18.99 | 1175 | 1721 | 2441 | 2250 | | | |
| | 74 | 1422 | 1.5 | II | 22.32 | 1217 | 1721 | 2430 | 2250 | | | |
| | 66 | 1603 | 1.4 | II | 25.15 | 1244 | 1721 | 2417 | 2250 | | | |
| | 58 | 1801 | 1.2 | I | 28.61 | 1278 | 1721 | 2401 | 2250 | | | |
| | 48 | 2170 | 1.1 | I | 34.89 | 1323 | 1721 | 2367 | 2250 | | | |
| | 43 | 2273 | 1.0 | I | 38.92 | 1382 | 1721 | 2356 | 2250 | | | |
| | 38 | 2529 | 0.9 | * | 43.86 | 1409 | 1721 | 2324 | 2250 | | | |
| | 33 | 2876 | 0.8 | * | 49.88 | 1431 | 1721 | 2279 | 2250 | | | |

(AGMA Class I = $f_B$ 1.0 - 1.39 II = $f_B$ 1.4 - 1.99 III = $f_B$ ≥ 2.0 * = $f_B$ < 1.0) **(Model Type in blue is an Energy Efficient motor)**


Send Quote Requests to info@automatedpt.com
Call +1(800)985-6929 To Order or Order Online At Nordgearmotors.com

DRIVESYSTEMS

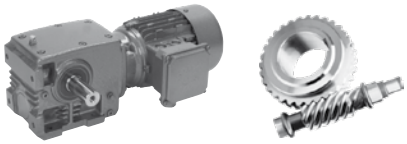

# 2.0 hp Gearmotors

| Motor Power $P_n$ [hp] | Output Speed $n_2$ [rpm] | Output Torque $T_2$ [lb-in] | Service Factor $f_B$ | AGMA Class | Gear Ratio $i_{tot}$ | Standard Bearings $F_{RN}$ OHL [lb] | Standard Bearings $F_{AN}$ Thrust [lb] | Heavy Duty Bearings (VL) $F_{RVL}$ OHL [lb] | Heavy Duty Bearings (VL) $F_{AVL}$ Thrust [lb] | Model Type | Weight [lb] | Dim. Page |
|---|---|---|---|---|---|---|---|---|---|---|---|---|
| **2.0** | 220 | 521 | 3.4 | III | 7.55 | 1132 | 1539 | 2588 | 2633 | **SK 12080 - 90L/4** | 97 | 642 |
| | 174 | 660 | 3.2 | III | 9.56 | 1211 | 1654 | 2752 | 2700 | SK 12080 - 90LH/4 | | |
| | 154 | 742 | 3.1 | III | 10.75 | 1249 | 1706 | 2842 | 2700 | | | |
| | 133 | 854 | 3.0 | III | 12.51 | 1298 | 1782 | 2925 | 2700 | | | |
| | 118 | 957 | 2.8 | III | 14.01 | 1337 | 1836 | 2925 | 2700 | | | |
| | 104 | 1079 | 2.7 | III | 15.98 | 1379 | 1904 | 2925 | 2700 | | | |
| | 87 | 1261 | 3.2 | III | 19.11 | 1501 | 2025 | 2925 | 2700 | | | |
| | 77 | 1418 | 2.9 | III | 21.49 | 1544 | 2025 | 2925 | 2700 | | | |
| | 66 | 1631 | 2.7 | III | 25.00 | 1604 | 2025 | 2925 | 2700 | | | |
| | 59 | 1805 | 2.5 | III | 27.99 | 1647 | 2025 | 2925 | 2700 | | | |
| | 52 | 2058 | 2.3 | III | 31.92 | 1697 | 2025 | 2925 | 2700 | | | |
| | 44 | 2416 | 2.0 | III | 37.91 | 1764 | 2025 | 2925 | 2700 | | | |
| | 37 | 2714 | 1.8 | II | 44.72 | 1859 | 2025 | 2925 | 2700 | | | |
| | 32 | 3118 | 1.6 | II | 52.03 | 1919 | 2025 | 2925 | 2700 | | | |
| | 28 | 3448 | 1.5 | II | 58.27 | 1962 | 2025 | 2925 | 2700 | | | |
| | 25 | 3881 | 1.4 | II | 66.44 | 2014 | 2025 | 2925 | 2700 | | | |
| | 21 | 4550 | 1.3 | I | 78.91 | 1967 | 2025 | 2925 | 2700 | | | |
| | 18 | 4652 | 1.1 | I | 94.35 | 1946 | 2025 | 2925 | 2700 | | | |
| | 16 | 5150 | 1.0 | I | 106.08 | 1843 | 2025 | 2889 | 2700 | | | |
| | 13 | 5899 | 0.9 | * | 123.42 | 1654 | 2025 | 2772 | 2700 | | | |
| | 12 | 6396 | 0.9 | * | 138.21 | 1499 | 2025 | 2684 | 2700 | | | |
| | 11 | 7173 | 0.8 | * | 157.59 | 1184 | 2025 | 2520 | 2700 | | | |
| | 55 | 1987 | 3.3 | III | 30.11 | 2081 | 2700 | 3645 | 3600 | **SK 32100 - 90L/4** | 154 | 654 |
| | 48 | 2187 | 3.6 | III | 34.32 | 2167 | 2700 | 3645 | 3600 | SK 32100 - 90LH/4 | | |
| | 43 | 2520 | 3.0 | III | 38.63 | 2221 | 2700 | 3645 | 3600 | | | |
| | 39 | 2794 | 2.9 | III | 42.83 | 2277 | 2700 | 3645 | 3600 | | | |
| | 33 | 3130 | 3.1 | III | 50.31 | 2385 | 2700 | 3645 | 3600 | | | |
| | 26 | 3918 | 2.7 | III | 64.55 | 2536 | 2700 | 3645 | 3600 | | | |
| | 23 | 4289 | 2.5 | III | 71.57 | 2599 | 2700 | 3645 | 3600 | | | |
| | 18 | 5502 | 2.1 | III | 94.19 | 2759 | 2700 | 3645 | 3600 | | | |
| | 16 | 5444 | 1.9 | II | 104.0 | 2891 | 2700 | 3645 | 3600 | | | |
| | 13 | 6557 | 1.7 | II | 129.0 | 3031 | 2700 | 3645 | 3600 | | | |
| | 10 | 8035 | 1.5 | II | 165.5 | 3204 | 2700 | 3645 | 3600 | | | |
| | 9.0 | 8770 | 1.4 | II | 183.5 | 3256 | 2700 | 3645 | 3600 | | | |
| | 6.9 | 10992 | 1.1 | I | 241.5 | 3220 | 2700 | 3645 | 3600 | | | |
| | 5.5 | 13837 | 0.9 | * | 304.0 | 2576 | 2700 | 3645 | 3600 | | | |
| | 6.4 | 13876 | 1.0 | I | 257.63 | 2565 | 2700 | 3645 | 3600 | **SK 33100 - 90L/4** | 172 | 654 |
| | 5.5 | 13168 | 1.0 | I | 299.28 | 2756 | 2700 | 3645 | 3600 | SK 33100 - 90L/4 | | |
| | 4.5 | 15509 | 0.9 | * | 365.07 | 2012 | 2700 | 3645 | 3600 | | | |
| | 22 | 4787 | 3.3 | III | 76.95 | 4815 | 4669 | 5963 | 6300 | **SK 42125 - 90L/4** | 243 | 658 |
| | 19 | 5364 | 3.2 | III | 87.30 | 4993 | 4669 | 5963 | 6300 | SK 42125 - 90LH/4 | | |
| | 17 | 5646 | 3.3 | III | 100.58 | 5243 | 4669 | 5963 | 6300 | | | |
| | 14 | 6418 | 3.1 | III | 117.50 | 5468 | 4669 | 5963 | 6300 | | | |
| | 11 | 7687 | 2.8 | III | 144.76 | 5796 | 4669 | 5963 | 6300 | | | |
| | 10 | 8414 | 2.6 | III | 160.74 | 5963 | 4669 | 5963 | 6300 | | | |
| | 9.1 | 9407 | 2.4 | III | 182.36 | 5963 | 4669 | 5963 | 6300 | | | |
| | 8.2 | 10248 | 2.3 | III | 201.63 | 5963 | 4669 | 5963 | 6300 | | | |
| | 3.3 | 21441 | 1.2 | I | 495.85 | 5706 | 4669 | 5963 | 6300 | | | |
| | 2.4 | 29023 | 0.9 | * | 695.60 | 4655 | 4669 | 5963 | 6300 | | | |

(AGMA Class I = $f_B$ 1.0 - 1.39 II = $f_B$ 1.4 - 1.99 III = $f_B$ ≥ 2.0 * = $f_B$ < 1.0) **(Model Type in blue is an Energy Efficient motor)**




Send Quote Requests to info@automatedpt.com
Call +1(800)985-6929 To Order or Order Online At Nordgearmotors.com

# 2.0 hp, 3.0 hp Gearmotors

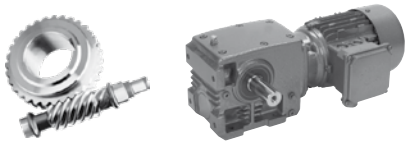

DRIVESYSTEMS

| Motor Power $P_n$ [hp] | Output Speed $n_2$ [rpm] | Output Torque $T_2$ [lb-in] | Service Factor $f_B$ | AGMA Class | Gear Ratio $i_{tot}$ | Standard Bearings $F_{RN}$ OHL [lb] | Standard Bearings $F_{AN}$ Thrust [lb] | Heavy Duty Bearings (VL) $F_{RVL}$ OHL [lb] | Heavy Duty Bearings (VL) $F_{AVL}$ Thrust [lb] | Model Type | Weight [lb] | Dim. Page |
|---|---|---|---|---|---|---|---|---|---|---|---|---|
| **2.0** | 7.0 | 13281 | 1.9 | II | 236.58 | 5963 | 4669 | 5963 | 6300 | **SK 43125 - 90L/4** | 280 | 662 |
| | 6.2 | 14939 | 1.7 | II | 269.76 | 5963 | 4669 | 5963 | 6300 | SK 43125 - 90LH/4 | | |
| | 5.1 | 17670 | 1.2 | I | 323.51 | 5963 | 4669 | 5963 | 6300 | | | |
| | 4.4 | 20489 | 1.1 | I | 380.39 | 5805 | 4669 | 5963 | 6300 | | | |
| | 3.7 | 23598 | 1.1 | I | 444.38 | 5459 | 4669 | 5963 | 6300 | | | |
| | 3.0 | 28657 | 1.0 | I | 547.47 | 4718 | 4669 | 5963 | 6300 | | | |
| | 2.1 | 32550 | 0.8 | * | 794.58 | 3935 | 4669 | 5963 | 6300 | | | |
| **3.0** | 229 | 742 | 1.9 | II | 7.43 | 837 | 1089 | 1971 | 2036 | **SK 12063 - 100L/4** | 84 | 634 |
| | 201 | 846 | 1.7 | II | 8.47 | 857 | 1103 | 2036 | 2070 | SK 12063 - 100LH/4 | | |
| | 171 | 984 | 1.5 | II | 9.96 | 884 | 1123 | 2115 | 2111 | | | |
| | 152 | 1109 | 1.4 | II | 11.22 | 900 | 1127 | 2174 | 2133 | | | |
| | 134 | 1261 | 1.3 | I | 12.76 | 916 | 1127 | 2237 | 2156 | | | |
| | 110 | 1521 | 1.1 | I | 15.57 | 938 | 1112 | 2331 | 2169 | | | |
| | 90 | 1792 | 1.1 | I | 18.99 | 1064 | 1618 | 2401 | 2250 | | | |
| | 76 | 2082 | 1.0 | I | 22.32 | 1094 | 1652 | 2376 | 2250 | | | |
| | 68 | 2346 | 0.9 | * | 25.15 | 1105 | 1670 | 2347 | 2250 | | | |
| | 60 | 2637 | 0.8 | * | 28.61 | 1121 | 1688 | 2311 | 2250 | | | |
| | 226 | 763 | 3.3 | III | 7.55 | 1078 | 1382 | 2518 | 2486 | **SK 12080 - 100L/4** | 106 | 642 |
| | 178 | 966 | 3.0 | III | 9.56 | 1141 | 1465 | 2678 | 2599 | SK 12080 - 100LH/4 | | |
| | 159 | 1086 | 2.8 | III | 10.75 | 1170 | 1492 | 2759 | 2651 | | | |
| | 136 | 1250 | 2.4 | III | 12.51 | 1213 | 1539 | 2867 | 2700 | | | |
| | 122 | 1400 | 2.3 | III | 14.01 | 1240 | 1555 | 2925 | 2700 | | | |
| | 107 | 1579 | 1.8 | II | 15.98 | 1269 | 1586 | 2925 | 2700 | | | |
| | 89 | 1846 | 2.2 | III | 19.11 | 1400 | 2025 | 2925 | 2700 | | | |
| | 79 | 2076 | 2.0 | III | 21.49 | 1433 | 2025 | 2925 | 2700 | | | |
| | 68 | 2387 | 1.8 | II | 25.00 | 1478 | 2025 | 2925 | 2700 | | | |
| | 61 | 2642 | 1.7 | II | 27.99 | 1517 | 2025 | 2925 | 2700 | | | |
| | 53 | 3013 | 1.5 | II | 31.92 | 1541 | 2025 | 2925 | 2700 | | | |
| | 45 | 3536 | 1.4 | II | 37.91 | 1584 | 2025 | 2925 | 2700 | | | |
| | 38 | 3972 | 1.2 | I | 44.72 | 1667 | 2025 | 2925 | 2700 | | | |
| | 33 | 4564 | 1.1 | I | 52.03 | 1699 | 2025 | 2925 | 2700 | | | |
| | 29 | 5047 | 1.1 | I | 58.27 | 1721 | 2025 | 2905 | 2700 | | | |
| | 26 | 5681 | 1.0 | I | 66.44 | 1715 | 2025 | 2810 | 2700 | | | |
| | 22 | 6659 | 0.9 | * | 78.91 | 1404 | 2025 | 2630 | 2700 | | | |
| | 128 | 1348 | 3.1 | III | 13.34 | 1539 | 1922 | 3632 | 3600 | **SK 32100 - 100L/4** | 163 | 654 |
| | 105 | 1621 | 3.7 | III | 16.22 | 1674 | 2322 | 3645 | 3600 | SK 32100 - 100LH/4 | | |
| | 100 | 1729 | 2.7 | III | 17.11 | 1634 | 2032 | 3645 | 3600 | | | |
| | 90 | 1896 | 2.5 | III | 18.97 | 1672 | 2075 | 3645 | 3600 | | | |
| | 83 | 2030 | 3.6 | III | 20.54 | 1787 | 2502 | 3645 | 3600 | | | |
| | 70 | 2371 | 3.4 | III | 24.27 | 1859 | 2630 | 3645 | 3600 | | | |
| | 57 | 2909 | 3.1 | III | 30.11 | 1953 | 2700 | 3645 | 3600 | | | |
| | 50 | 3201 | 3.0 | III | 34.32 | 2030 | 2700 | 3645 | 3600 | | | |
| | 44 | 3689 | 2.6 | III | 38.63 | 2061 | 2700 | 3645 | 3600 | | | |
| | 40 | 4090 | 2.4 | III | 42.83 | 2102 | 2700 | 3645 | 3600 | | | |
| | 34 | 4581 | 2.1 | III | 50.31 | 2201 | 2700 | 3645 | 3600 | | | |
| | 26 | 5734 | 1.8 | II | 64.55 | 2309 | 2700 | 3645 | 3600 | | | |
| | 24 | 6278 | 1.7 | II | 71.57 | 2354 | 2700 | 3645 | 3600 | | | |
| | 18 | 8053 | 1.4 | II | 94.19 | 2435 | 2700 | 3645 | 3600 | | | |

(AGMA Class I = $f_B$ 1.0 - 1.39 II = $f_B$ 1.4 - 1.99 III = $f_B$ ≥ 2.0 * = $f_B$ < 1.0) **(Model Type in blue is an Energy Efficient motor)**


Send Quote Requests to info@automatedpt.com
Call +1(800)985-6929 To Order or Order Online At Nordgearmotors.com

DRIVESYSTEMS

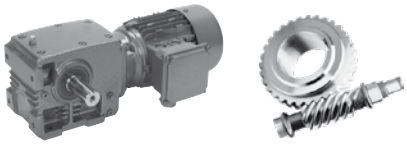

# 3.0 hp, 5.0 hp Gearmotors

| Motor Power $P_n$ [hp] | Output Speed $n_2$ [rpm] | Output Torque $T_2$ [lb-in] | Service Factor $f_B$ | AGMA Class | Gear Ratio $i_{tot}$ | Standard Bearings $F_{R\,N}$ OHL [lb] | Standard Bearings $F_{A\,N}$ Thrust [lb] | Heavy Duty Bearings (VL) $F_{R\,VL}$ OHL [lb] | Heavy Duty Bearings (VL) $F_{A\,VL}$ Thrust [lb] | Model Type | Weight [lb] | Dim. Page |
|---|---|---|---|---|---|---|---|---|---|---|---|---|
| **3.0** | 16 | 7968 | 1.3 | I | 104.0 | 2594 | 2700 | 3645 | 3600 | **SK 32100 - 100L/4** | 163 | 654 |
| | 13 | 9597 | 1.1 | I | 129.0 | 2664 | 2700 | 3645 | 3600 | SK 32100 - 100LH/4 | | |
| | 10 | 11761 | 1.0 | I | 165.5 | 2752 | 2700 | 3645 | 3600 | | | |
| | 9.3 | 12837 | 0.9 | * | 183.5 | 2765 | 2700 | 3645 | 3600 | | | |
| | 7.1 | 16089 | 0.8 | * | 241.5 | 1753 | 2700 | 3645 | 3600 | | | |
| | 48 | 3452 | 3.3 | III | 35.33 | 3690 | 4669 | 5963 | 6300 | **SK 42125 - 100L/4** | 251 | 658 |
| | 42 | 3910 | 4.2 | III | 40.95 | 3861 | 4669 | 5963 | 6300 | SK 42125 - 100LH/4 | | |
| | 35 | 4544 | 3.8 | III | 48.15 | 4046 | 4669 | 5963 | 6300 | | | |
| | 30 | 5247 | 3.5 | III | 56.25 | 4214 | 4669 | 5963 | 6300 | | | |
| | 25 | 6387 | 3.1 | III | 69.30 | 4453 | 4669 | 5963 | 6300 | | | |
| | 22 | 7006 | 2.9 | III | 76.95 | 4579 | 4669 | 5963 | 6300 | | | |
| | 20 | 7852 | 2.7 | III | 87.30 | 4739 | 4669 | 5963 | 6300 | | | |
| | 17 | 8264 | 2.3 | III | 100.58 | 4955 | 4669 | 5963 | 6300 | | | |
| | 15 | 9394 | 2.1 | III | 117.50 | 5157 | 4669 | 5963 | 6300 | | | |
| | 12 | 11252 | 1.9 | II | 144.76 | 5427 | 4669 | 5963 | 6300 | | | |
| | 11 | 12315 | 1.8 | II | 160.74 | 5564 | 4669 | 5963 | 6300 | | | |
| | 9.3 | 13769 | 1.6 | II | 182.36 | 5735 | 4669 | 5963 | 6300 | | | |
| | 8.5 | 15000 | 1.6 | II | 201.63 | 5848 | 4669 | 5963 | 6300 | | | |
| | 5.1 | 22857 | 1.1 | I | 337.46 | 5549 | 4669 | 5963 | 6300 | | | |
| | 3.4 | 31383 | 0.8 | * | 495.85 | 4196 | 4669 | 5963 | 6300 | | | |
| | 9.1 | 15640 | 1.5 | II | 187.80 | 5623 | 4669 | 5963 | 6300 | **SK 43125 - 100L/4** | 289 | 662 |
| | 7.2 | 19439 | 1.3 | I | 236.58 | 5823 | 4669 | 5963 | 6300 | SK 43125 - 100LH/4 | | |
| | 6.3 | 21866 | 1.1 | I | 269.76 | 5661 | 4669 | 5963 | 6300 | | | |
| **5.0** | 228 | 1255 | 2.0 | III | 7.55 | 983 | 1103 | 2421 | 2239 | **SK 12080 - 100LA/4** | 112 | 642 |
| | 180 | 1590 | 1.8 | II | 9.56 | 1019 | 1103 | 2556 | 2286 | SK 12080 - 112MH/4 | | |
| | 160 | 1788 | 1.7 | II | 10.75 | 1033 | 1091 | 2624 | 2297 | | | |
| | 138 | 2058 | 1.5 | II | 12.51 | 1053 | 1067 | 2711 | 2309 | | | |
| | 123 | 2304 | 1.4 | II | 14.01 | 1058 | 1035 | 2779 | 2297 | | | |
| | 108 | 2599 | 1.1 | I | 15.98 | 1053 | 995 | 2849 | 2286 | | | |
| | 90 | 3038 | 1.3 | I | 19.11 | 1220 | 1620 | 2925 | 2700 | | | |
| | 80 | 3417 | 1.2 | I | 21.49 | 1226 | 1620 | 2925 | 2700 | | | |
| | 69 | 3929 | 1.1 | I | 25.00 | 1240 | 1604 | 2925 | 2700 | | | |
| | 62 | 4348 | 1.0 | I | 27.99 | 1244 | 1604 | 2925 | 2700 | | | |
| | 54 | 4958 | 0.9 | * | 31.92 | 1233 | 1541 | 2916 | 2700 | | | |
| | 46 | 5820 | 0.8 | * | 37.91 | 1213 | 1465 | 2786 | 2700 | | | |
| | 240 | 1222 | 2.3 | III | 7.19 | 1233 | 1397 | 2993 | 3308 | **SK 32100 - 100LA/4** | 170 | 654 |
| | 190 | 1530 | 2.2 | III | 9.10 | 1298 | 1467 | 3179 | 3454 | SK 32100 - 112MH/4 | | |
| | 160 | 1807 | 2.1 | III | 10.75 | 1346 | 1499 | 3312 | 3555 | | | |
| | 129 | 2219 | 1.9 | II | 13.34 | 1397 | 1530 | 3485 | 3600 | | | |
| | 106 | 2668 | 2.3 | III | 16.22 | 1548 | 2041 | 3645 | 3600 | | | |
| | 101 | 2845 | 1.6 | II | 17.11 | 1451 | 1519 | 3645 | 3600 | | | |
| | 91 | 3120 | 1.5 | II | 18.97 | 1474 | 1512 | 3645 | 3600 | | | |
| | 84 | 3341 | 2.2 | III | 20.54 | 1622 | 2147 | 3645 | 3600 | | | |
| | 71 | 3903 | 2.1 | III | 24.27 | 1670 | 2210 | 3645 | 3600 | | | |
| | 57 | 4787 | 1.9 | II | 30.11 | 1724 | 2273 | 3645 | 3600 | | | |
| | 50 | 5269 | 1.8 | II | 34.32 | 1791 | 2648 | 3645 | 3600 | | | |
| | 45 | 6071 | 1.6 | II | 38.63 | 1764 | 2300 | 3645 | 3600 | | | |
| | 40 | 6732 | 1.4 | II | 42.83 | 1773 | 2295 | 3645 | 3600 | | | |

(AGMA Class I = $f_B$ 1.0 - 1.39 II = $f_B$ 1.4 - 1.99 III = $f_B$ ≥ 2.0 * = $f_B$ < 1.0) **(Model Type in blue is an Energy Efficient motor)**




Send Quote Requests to info@automatedpt.com
Call +1(800)985-6929 To Order or Order Online At Nordgearmotors.com

# 5.0 hp, 7.5 hp Gearmotors

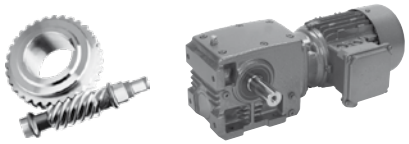

DRIVESYSTEMS

| Motor Power $P_n$ [hp] | Output Speed $n_2$ [rpm] | Output Torque $T_2$ [lb-in] | Service Factor $f_B$ | AGMA Class | Gear Ratio $i_{tot}$ | Standard Bearings $F_{RN}$ OHL [lb] | Standard Bearings $F_{AN}$ Thrust [lb] | Heavy Duty Bearings (VL) $F_{RVL}$ OHL [lb] | Heavy Duty Bearings (VL) $F_{AVL}$ Thrust [lb] | Model Type | Weight [lb] | Dim. Page |
|---|---|---|---|---|---|---|---|---|---|---|---|---|
| **5.0** | 34 | 7539 | 1.3 | I | 50.31 | 1845 | 2700 | 3645 | 3600 | **SK 32100 - 100LA/4** | 170 | 654 |
| | 27 | 9437 | 1.1 | I | 64.55 | 1856 | 2700 | 3645 | 3600 | SK 32100 - 112MH/4 | | |
| | 24 | 10333 | 1.0 | I | 71.57 | 1852 | 2700 | 3645 | 3600 | | | |
| | 18 | 13254 | 0.9 | * | 94.19 | 1789 | 2700 | 3645 | 3600 | | | |
| | 17 | 13114 | 0.8 | * | 104.00 | 2003 | 2700 | 3645 | 3600 | | | |
| | 183 | 1599 | 2.5 | III | 9.41 | 2381 | 2954 | 5162 | 5270 | **SK 42125 - 100LA/4** | 258 | 658 |
| | 156 | 1880 | 2.4 | III | 11.06 | 2489 | 3096 | 5389 | 5459 | SK 42125 - 112MH/4 | | |
| | 133 | 2198 | 2.3 | III | 12.93 | 2599 | 3245 | 5627 | 5654 | | | |
| | 108 | 2677 | 2.1 | III | 15.92 | 2747 | 3443 | 5949 | 5906 | | | |
| | 92 | 3127 | 2.5 | III | 18.80 | 2945 | 4034 | 5963 | 6300 | | | |
| | 78 | 3637 | 2.4 | III | 22.11 | 3083 | 4259 | 5963 | 6300 | | | |
| | 67 | 4248 | 2.3 | III | 25.83 | 3204 | 4462 | 5963 | 6300 | | | |
| | 54 | 5176 | 2.1 | III | 31.82 | 3380 | 4669 | 5963 | 6300 | | | |
| | 49 | 5682 | 2.0 | III | 35.33 | 3465 | 4669 | 5963 | 6300 | | | |
| | 42 | 6436 | 2.5 | III | 40.95 | 3627 | 4669 | 5963 | 6300 | | | |
| | 36 | 7480 | 2.3 | III | 48.15 | 3769 | 4669 | 5963 | 6300 | | | |
| | 31 | 8635 | 2.1 | III | 56.25 | 3899 | 4669 | 5963 | 6300 | | | |
| | 25 | 10512 | 1.9 | II | 69.30 | 4070 | 4669 | 5963 | 6300 | | | |
| | 22 | 11532 | 1.8 | II | 76.95 | 4156 | 4669 | 5963 | 6300 | | | |
| | 20 | 12923 | 1.6 | II | 87.30 | 4264 | 4669 | 5963 | 6300 | | | |
| | 17 | 13602 | 1.4 | II | 100.58 | 4466 | 4669 | 5963 | 6300 | | | |
| | 15 | 15461 | 1.3 | I | 117.50 | 4604 | 4669 | 5963 | 6300 | | | |
| | 12 | 18519 | 1.1 | I | 144.76 | 4763 | 4669 | 5963 | 6300 | | | |
| | 11 | 20269 | 1.1 | I | 160.74 | 4831 | 4669 | 5963 | 6300 | | | |
| | 9.5 | 22662 | 1.0 | I | 182.36 | 4907 | 4669 | 5963 | 6300 | | | |
| | 8.6 | 24689 | 0.9 | * | 201.63 | 4957 | 4669 | 5963 | 6300 | | | |
| | 28 | 9823 | 1.4 | II | 62.50 | 3915 | 4669 | 5963 | 6300 | **SK 43125 - 100LA/4** | 295 | 662 |
| | 25 | 10872 | 1.3 | I | 69.99 | 3994 | 4669 | 5963 | 6300 | SK 43125 - 112MH/4 | | |
| | 20 | 13236 | 1.2 | I | 86.22 | 4129 | 4669 | 5963 | 6300 | | | |
| | 16 | 16021 | 1.3 | I | 110.97 | 4430 | 4669 | 5963 | 6300 | | | |
| | 13 | 18601 | 1.2 | I | 130.49 | 4514 | 4669 | 5963 | 6300 | | | |
| | 11 | 21451 | 1.1 | I | 152.44 | 4581 | 4669 | 5963 | 6300 | | | |
| | 9.2 | 25741 | 0.9 | * | 187.80 | 4649 | 4669 | 5963 | 6300 | | | |
| | 7.3 | 31995 | 0.8 | * | 236.58 | 4064 | 4669 | 5963 | 6300 | | | |
| **7.5** | 241 | 1822 | 3.3 | III | 7.19 | 1136 | 1139 | 2898 | 3053 | **SK 32100 - 132S/4** | 221 | 654 |
| | 191 | 2280 | 2.8 | III | 9.10 | 1179 | 1139 | 3056 | 3148 | SK 32100 - 132SH/4 | | |
| | 161 | 2693 | 2.4 | III | 10.75 | 1202 | 1107 | 3166 | 3179 | | | |
| | 130 | 3306 | 1.9 | II | 13.34 | 1226 | 1049 | 3305 | 3209 | | | |
| | 107 | 3975 | 1.7 | II | 16.22 | 1388 | 1708 | 3573 | 3600 | | | |
| | 101 | 4240 | 1.1 | I | 17.11 | 1040 | 900 | 3449 | 3179 | | | |
| | 91 | 4649 | 1.0 | I | 18.97 | 954 | 821 | 3510 | 3148 | | | |
| | 84 | 4978 | 1.5 | II | 20.54 | 1424 | 1715 | 3645 | 3600 | | | |
| | 71 | 5816 | 1.6 | II | 24.27 | 1431 | 1708 | 3645 | 3600 | | | |
| | 58 | 7133 | 1.3 | I | 30.11 | 1431 | 1643 | 3645 | 3600 | | | |
| | 51 | 7850 | 1.2 | I | 34.32 | 1478 | 2095 | 3645 | 3600 | | | |
| | 45 | 9047 | 1.1 | I | 38.63 | 1377 | 1499 | 3645 | 3600 | | | |
| | 41 | 10030 | 1.0 | I | 42.83 | 1343 | 1395 | 3645 | 3600 | | | |
| | 34 | 11234 | 0.9 | * | 50.31 | 1395 | 1971 | 3645 | 3600 | | | |

(AGMA Class I = $f_B$ 1.0 - 1.39 II = $f_B$ 1.4 - 1.99 III = $f_B$ ≥ 2.0 * = $f_B$ < 1.0) **(Model Type in blue is an Energy Efficient motor)**


Send Quote Requests to info@automatedpt.com
Call +1(800)985-6929 To Order or Order Online At Nordgearmotors.com

DRIVESYSTEMS

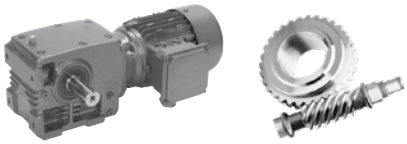

# 7.5 hp, 10 hp Gearmotors

| Motor Power $P_n$ [hp] | Output Speed $n_2$ [rpm] | Output Torque $T_2$ [lb-in] | Service Factor $f_B$ | AGMA Class | Gear Ratio $i_{tot}$ | Standard Bearings $F_{RN}$ OHL [lb] | Standard Bearings $F_{AN}$ Thrust [lb] | Heavy Duty Bearings (VL) $F_{RVL}$ OHL [lb] | Heavy Duty Bearings (VL) $F_{AVL}$ Thrust [lb] | Model Type | Weight [lb] | Dim. Page |
|---|---|---|---|---|---|---|---|---|---|---|---|---|
| **7.5** | 238 | 1866 | 4.0 | III | 7.29 | 2138 | 2489 | 4725 | 4757 | **SK 42125 - 132S/4** | 309 | 658 |
| | 224 | 1986 | 3.9 | III | 7.76 | 2171 | 2538 | 4811 | 4817 | SK 42125 - 132SH/4 | | |
| | 206 | 2158 | 3.9 | III | 8.43 | 2221 | 2592 | 4919 | 4903 | | | |
| | 184 | 2383 | 3.7 | III | 9.41 | 2286 | 2671 | 5063 | 5006 | | | |
| | 157 | 2801 | 3.5 | III | 11.06 | 2376 | 2781 | 5274 | 5162 | | | |
| | 134 | 3274 | 3.2 | III | 12.93 | 2468 | 2867 | 5497 | 5303 | | | |
| | 119 | 3610 | 3.3 | III | 14.57 | 2635 | 3443 | 5785 | 5886 | | | |
| | 109 | 3988 | 2.8 | III | 15.92 | 2590 | 2966 | 5792 | 5486 | | | |
| | 92 | 4659 | 2.9 | III | 18.80 | 2806 | 3699 | 5963 | 6197 | | | |
| | 78 | 5419 | 2.6 | III | 22.11 | 2914 | 3850 | 5963 | 6300 | | | |
| | 67 | 6330 | 2.4 | III | 25.83 | 3002 | 4007 | 5963 | 6300 | | | |
| | 55 | 7712 | 2.1 | III | 31.82 | 3130 | 4178 | 5963 | 6300 | | | |
| | 49 | 8466 | 1.3 | I | 35.33 | 3195 | 4259 | 5963 | 6300 | | | |
| | 42 | 9590 | 1.7 | II | 40.95 | 3339 | 4669 | 5963 | 6300 | | | |
| | 36 | 11145 | 1.6 | II | 48.15 | 3429 | 4669 | 5963 | 6300 | | | |
| | 31 | 12867 | 1.4 | II | 56.25 | 3519 | 4669 | 5963 | 6300 | | | |
| | 25 | 15663 | 1.3 | I | 69.30 | 3593 | 4669 | 5963 | 6300 | | | |
| | 23 | 17182 | 1.2 | I | 76.95 | 3636 | 4669 | 5963 | 6300 | | | |
| | 20 | 19256 | 1.1 | I | 87.30 | 3663 | 4669 | 5963 | 6300 | | | |
| | 17 | 20268 | 0.9 | * | 100.58 | 3859 | 4669 | 5963 | 6300 | | | |
| | 15 | 23037 | 0.9 | * | 117.50 | 3915 | 4669 | 5963 | 6300 | | | |
| | 12 | 27593 | 0.8 | * | 144.76 | 3931 | 4669 | 5963 | 6300 | | | |
| **10** | 241 | 2429 | 2.5 | III | 7.19 | 1042 | 884 | 2806 | 2815 | **SK 32100 - 132M/4** | 245 | 654 |
| | 191 | 3042 | 2.1 | III | 9.10 | 983 | 815 | 2936 | 2828 | SK 32100 - 132MH/4 | | |
| | 161 | 3594 | 1.8 | II | 10.75 | 873 | 727 | 3026 | 2815 | | | |
| | 130 | 4411 | 1.4 | II | 13.34 | 684 | 565 | 3123 | 2756 | | | |
| | 107 | 5305 | 1.3 | I | 16.22 | 1229 | 1368 | 3409 | 3591 | | | |
| | 101 | 5658 | 0.8 | * | 17.11 | 349 | 281 | 3215 | 2592 | | | |
| | 91 | 6204 | 0.8 | * | 18.97 | 176 | 140 | 3245 | 2500 | | | |
| | 84 | 6643 | 1.1 | I | 20.54 | 1208 | 1298 | 3537 | 3600 | | | |
| | 71 | 7761 | 1.2 | I | 24.27 | 1181 | 1211 | 3611 | 3600 | | | |
| | 58 | 9520 | 1.0 | I | 30.11 | 1109 | 1017 | 3645 | 3539 | | | |
| | 51 | 10476 | 0.9 | * | 34.32 | 1152 | 1544 | 3645 | 3600 | | | |
| | 45 | 12073 | 0.8 | * | 38.63 | 837 | 707 | 3645 | 3362 | | | |
| | 238 | 2490 | 3.0 | III | 7.29 | 2066 | 2279 | 4655 | 4570 | **SK 42125 - 132M/4** | 333 | 658 |
| | 224 | 2651 | 3.0 | III | 7.76 | 2097 | 2315 | 4730 | 4613 | SK 42125 - 132MH/4 | | |
| | 206 | 2880 | 2.9 | III | 8.43 | 2142 | 2347 | 4838 | 4673 | | | |
| | 184 | 3180 | 2.7 | III | 9.41 | 2192 | 2392 | 4970 | 4757 | | | |
| | 157 | 3738 | 2.6 | III | 11.06 | 2273 | 2446 | 5168 | 4871 | | | |
| | 134 | 4370 | 2.4 | III | 12.93 | 2338 | 2489 | 5369 | 4966 | | | |
| | 119 | 4818 | 2.5 | III | 14.57 | 2522 | 3182 | 5693 | 5654 | | | |
| | 109 | 5323 | 2.1 | III | 15.92 | 2428 | 2513 | 5634 | 5063 | | | |
| | 92 | 6217 | 2.1 | III | 18.80 | 2651 | 3355 | 5963 | 5906 | | | |
| | 78 | 7231 | 2.0 | III | 22.11 | 2734 | 3458 | 5963 | 6068 | | | |
| | 67 | 8448 | 1.8 | II | 25.83 | 2801 | 3526 | 5963 | 6197 | | | |
| | 55 | 10291 | 1.6 | II | 31.82 | 2878 | 3593 | 5963 | 6300 | | | |
| | 49 | 11298 | 1.0 | I | 35.33 | 2916 | 3629 | 5963 | 6300 | | | |
| | 42 | 12798 | 1.3 | I | 40.95 | 3053 | 4484 | 5963 | 6300 | | | |
| | 36 | 14873 | 1.2 | I | 48.15 | 3089 | 4579 | 5963 | 6300 | | | |
| | 31 | 17171 | 1.1 | I | 56.25 | 3123 | 4631 | 5963 | 6300 | | | |

(AGMA Class I = $f_B$ 1.0 - 1.39 II = $f_B$ 1.4 - 1.99 III = $f_B$ ≥ 2.0 * = $f_B$ < 1.0) **(Model Type in blue is an Energy Efficient motor)**


Send Quote Requests to info@automatedpt.com
Call +1(800)985-6929 To Order or Order Online At Nordgearmotors.com

# 10 hp, 15 hp, 20 hp Gearmotors

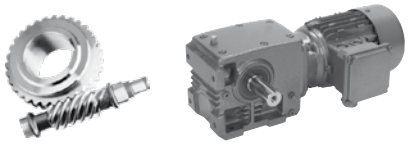

DRIVESYSTEMS

| Motor Power $P_n$ [hp] | Output Speed $n_2$ [rpm] | Output Torque $T_2$ [lb-in] | Service Factor $f_B$ | AGMA Class | Gear Ratio $i_{tot}$ | Standard Bearings $F_{RN}$ OHL [lb] | Standard Bearings $F_{AN}$ Thrust [lb] | Heavy Duty Bearings (VL) $F_{RVL}$ OHL [lb] | Heavy Duty Bearings (VL) $F_{AVL}$ Thrust [lb] | Model Type | Weight [lb] | Dim. Page |
|---|---|---|---|---|---|---|---|---|---|---|---|---|
| **10** | 25 | 20902 | 0.9 | * | 69.30 | 3103 | 4669 | 5963 | 6300 | **SK 42125 - 132M/4** | 333 | 658 |
| | 23 | 22930 | 0.9 | * | 76.95 | 3085 | 4669 | 5963 | 6300 | SK 42125 - 132MH/4 | | |
| | 20 | 25697 | 0.8 | * | 87.30 | 3058 | 4624 | 5963 | 6300 | | | |
| **15** | 243 | 3660 | 2.3 | III | 7.29 | 1910 | 1872 | 4496 | 4169 | **SK 42125 - 160M/4** | 373 | 658 |
| | 228 | 3898 | 2.3 | III | 7.76 | 1931 | 1872 | 4561 | 4190 | SK 42125 - 160MH/4 | | |
| | 210 | 4234 | 2.4 | III | 8.43 | 1958 | 1872 | 4649 | 4223 | | | |
| | 188 | 4676 | 2.2 | III | 9.41 | 1994 | 1856 | 4766 | 4257 | | | |
| | 160 | 5496 | 2.0 | III | 11.06 | 2041 | 1816 | 4937 | 4300 | | | |
| | 137 | 6425 | 1.7 | II | 12.93 | 2061 | 1744 | 5096 | 4284 | | | |
| | 121 | 7084 | 1.7 | II | 14.57 | 2291 | 2675 | 5454 | 5186 | | | |
| | 111 | 7826 | 1.4 | II | 15.92 | 1901 | 1607 | 5306 | 4230 | | | |
| | 94 | 9141 | 1.5 | II | 18.80 | 2347 | 2698 | 5765 | 5321 | | | |
| | 80 | 10632 | 1.3 | I | 22.11 | 2383 | 2698 | 5960 | 5373 | | | |
| | 69 | 12421 | 1.2 | I | 25.83 | 2376 | 2624 | 5963 | 5373 | | | |
| | 56 | 15132 | 1.1 | I | 31.82 | 2360 | 2489 | 5963 | 5337 | | | |
| | 43 | 18817 | 0.9 | * | 40.95 | 2466 | 3443 | 5963 | 6300 | | | |
| | 37 | 21868 | 0.8 | * | 48.15 | 2396 | 3375 | 5963 | 6300 | | | |
| **20** | 242 | 4894 | 1.7 | II | 7.29 | 1760 | 1467 | 4370 | 3782 | **SK 42125 - 160L/4** | 410 | 658 |
| | 227 | 5208 | 1.7 | II | 7.76 | 1773 | 1438 | 4415 | 3787 | SK 42125 - 160LH/4 | | |
| | 209 | 5658 | 1.8 | II | 8.43 | 1751 | 1395 | 4498 | 3782 | | | |
| | 188 | 6248 | 1.6 | II | 9.41 | 1663 | 1339 | 4595 | 3769 | | | |
| | 160 | 7344 | 1.5 | II | 11.06 | 1492 | 1197 | 4725 | 3728 | | | |
| | 137 | 8585 | 1.3 | I | 12.93 | 1274 | 1017 | 4847 | 3616 | | | |
| | 121 | 9466 | 1.3 | I | 14.57 | 2050 | 2178 | 5256 | 4734 | | | |
| | 111 | 10457 | 1.0 | I | 15.92 | 873 | 704 | 4984 | 3407 | | | |
| | 94 | 12215 | 1.1 | I | 18.80 | 2034 | 2054 | 5504 | 4725 | | | |
| | 80 | 14207 | 1.0 | I | 22.11 | 2007 | 1928 | 5650 | 4687 | | | |
| | 68 | 16598 | 0.9 | * | 25.83 | 1935 | 1744 | 5769 | 4583 | | | |
| | 55 | 20219 | 0.8 | * | 31.82 | 1708 | 1409 | 5909 | 4367 | | | |



(AGMA Class I = $f_B$ 1.0 - 1.39 II = $f_B$ 1.4 - 1.99 III = $f_B$ ≥ 2.0 * = $f_B$ < 1.0) **(Model Type in blue is an Energy Efficient motor)**


Send Quote Requests to info@automatedpt.com
Call +1(800)985-6929 To Order or Order Online At Nordgearmotors.com

Send Quote Requests to info@automatedpt.com
Call +1(800)985-6929 To Order or Order Online At Nordgearmotors.com

# Right-angle Helical-worm Reducers
# Selection & Combinations

## Selection

- SK 02040
- SK 02050
- SK 13050
- SK 12063
- SK 13063
- SK 12080
- SK 13080
- SK 32100
- SK 33100
- SK 42125
- SK 43125

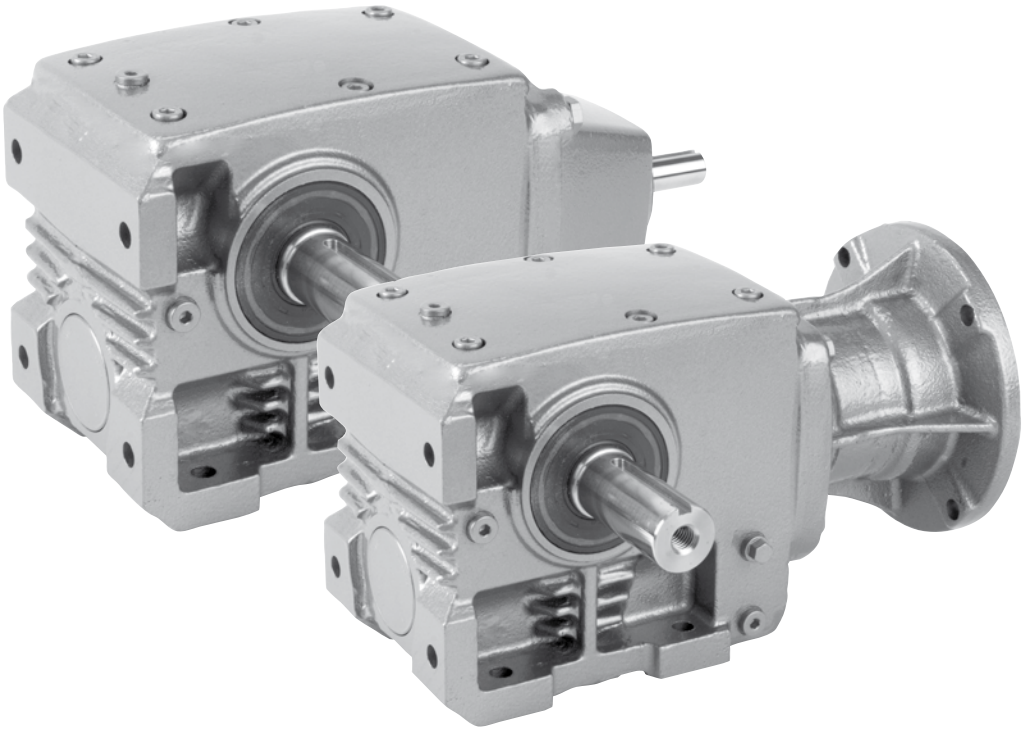

NORD® DRIVESYSTEMS

www.nord.com

UNICASE™

| Model Type | Gear Ratio Total $i_{tot}$ | Helical Gears $i_1$ | Worm Gears $z_2 = i_2$ | $n_1$=1750 rpm $n_2$ [rpm] | $T_{2\,max}$ [lb-in] | $HP_{max}$ [hp] | # [%] |
|---|---|---|---|---|---|---|---|
| SK 33100 | 53.70 | 10.39 | 31/6 | 33 | 6106 | 2.00 | 87 |
| | 69.85 | 5.99 | 35/3 | 25 | 9558 | 2.00 | 83 |
| | 85.21 | 7.30 | 35/3 | 21 | 9558 | 2.00 | 82 |
| | 109.32 | 9.37 | 35/3 | 16 | 10532 | 2.00 | 81 |
| | 121.21 | 10.39 | 35/3 | 14 | 10532 | 2.00 | 81 |
| | 142.38 | 7.30 | 39/2 | 12 | 11594 | 2.00 | 75 |
| | 182.66 | 9.37 | 39/2 | 9.6 | 12567 | 2.00 | 73 |
| | 257.63 | 13.21 | 39/2 | 6.8 | 13364 | 2.00 | 71 |
| | 299.28 | 5.99 | 50/1 | 5.8 | 13364 | 2.00 | 58 |
| | 365.07 | 7.30 | 50/1 | 4.8 | 13364 | 1.78 | 57 |
| | 468.37 | 9.37 | 50/1 | 3.7 | 14072 | 1.53 | 54 |
| | 519.31 | 10.39 | 50/1 | 3.4 | 14072 | 1.41 | 54 |
| | 660.60 | 13.21 | 50/1 | 2.6 | 14072 | 1.11 | 52 |
| | **1175.19** | 23.50 | 50/1 | 1.5 | 14072 | 0.68 | 49 |
| | **1507.71** | 30.15 | 50/1 | 1.2 | 14072 | 0.56 | |





Send Quote Requests to info@automatedpt.com
Call +1(800)985-6929 To Order or Order Online At Nordgearmotors.com

# SK 02040
# NEMA-C + W
# Ratings & Combinations

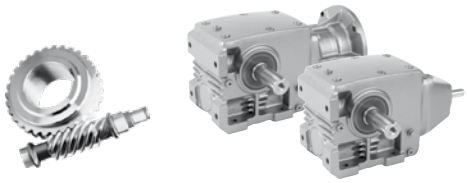

DRIVESYSTEMS

| Model Type | Gear Ratio | | | $n_2$ = Output Speed<br>$T_{2\,max}$ = Output Torque*<br>$HP_{max}$ = Input power ◈<br>$\eta$ = Efficiencies | | | | | | | | NEMA C-Face* Available Combinations | | | | |
|---|---|---|---|---|---|---|---|---|---|---|---|---|---|---|---|---|
| | | | | $n_1$ =1750 rpm | | | | $n_1$ =1150 rpm | | | | | | | | |
| | Total | Helical Gears | Worm Gears | $n_2$ | $T_{2\,max}$ | $HP_{max}$ | $\eta$ | $n_2$ | $T_{2\,max}$ | $HP_{max}$ | $\eta$ | | | | | |
| | $i_{tot}$ | $i_1$ | $\frac{z_2}{z_1} = i_2$ | [rpm] | [lb-in] | [hp] | [%] | [rpm] | [lb-in] | [hp] | [%] | 56C | 140TC | 180TC | 210TC | 250TC |
| SK 02040 | 4.40 | 1.15 | 23/6 | 398 | 407 | 1.50 | 88 | 262 | 469 | 0.99 | 88 | X | | | | |
| | 5.09 | 1.33 | 23/6 | 344 | 425 | 1.50 | 88 | 227 | 487 | 0.99 | 87 | X | | | | |
| | 6.63 | 1.73 | 23/6 | 264 | 478 | 1.50 | 88 | 174 | 540 | 0.99 | 87 | X | | | | |
| | 7.51 | 1.96 | 23/6 | 233 | 504 | 1.50 | 87 | 154 | 566 | 0.99 | 86 | X | | | | |
| | 8.82 | 1.15 | 23/3 | 198 | 575 | 1.50 | 84 | 131 | 664 | 0.99 | 83 | X | | | | |
| | 10.20 | 1.33 | 23/3 | 172 | 602 | 1.50 | 84 | 113 | 690 | 0.99 | 82 | X | | | | |
| | 13.27 | 1.73 | 23/3 | 132 | 646 | 1.50 | 83 | 87 | 726 | 0.99 | 82 | X | | | | |
| | 15.03 | 1.96 | 23/3 | 116 | 664 | 1.47 | 83 | 77 | 743 | 1.13 | 81 | X | | | | |
| | 17.10 | 2.23 | 23/3 | 102 | 690 | 1.37 | 82 | 68 | 761 | 1.02 | 81 | X | | | | |
| | 19.56 | 2.55 | 23/3 | 89 | 708 | 1.22 | 82 | 59 | 770 | 0.90 | 80 | X | | | | |
| | 21.95 | 1.33 | 33/2 | 80 | 646 | 1.10 | 75 | 53 | 743 | 0.86 | 73 | X | | | | |
| | 28.55 | 1.73 | 33/2 | 61 | 664 | 0.87 | 74 | 40 | 752 | 0.66 | 72 | X* | | | | |
| | 32.34 | 1.96 | 33/2 | 54 | 690 | 0.80 | 73 | 36 | 770 | 0.62 | 72 | X* | | | | |
| | 36.80 | 2.23 | 33/2 | 48 | 717 | 0.75 | 73 | 31 | 788 | 0.55 | 71 | X* | | | | |
| | 42.08 | 2.55 | 33/2 | 42 | 752 | 0.70 | 72 | 27 | 823 | 0.51 | 70 | X* | | | | |
| | 44.85 | 1.15 | 39/1 | 39 | 717 | 0.74 | 60 | 26 | 823 | 0.59 | 57 | X* | | | | |
| | **46.79** | 6.10 | 23/3 | 37 | 885 | 0.66 | 79 | 25 | 938 | 0.48 | 78 | X* | | | | |
| | 51.87 | 1.33 | 39/1 | 34 | 717 | 0.66 | 59 | 22 | 823 | 0.51 | 56 | X* | | | | |
| | **59.83** | 7.80 | 23/3 | 29 | 885 | 0.51 | 79 | 19 | 938 | 0.36 | 78 | X* | | | | |
| | 67.47 | 1.73 | 39/1 | 26 | 726 | 0.52 | 57 | 17 | 814 | 0.40 | 55 | X* | | | | |
| | 76.44 | 1.96 | 39/1 | 23 | 752 | 0.48 | 57 | 15 | 841 | 0.38 | 54 | X* | | | | |
| | 86.97 | 2.23 | 39/1 | 20 | 770 | 0.44 | 56 | 13 | 850 | 0.34 | 53 | X* | | | | |
| | 99.45 | 2.55 | 39/1 | 18 | 814 | 0.43 | 55 | 12 | 894 | 0.32 | 53 | X* | | | | |
| | **100.65** | 6.10 | 33/2 | 17 | 885 | 0.35 | 69 | 11 | 938 | 0.24 | 68 | X* | | | | |
| | 115.05 | 2.95 | 39/1 | 15 | 832 | 0.36 | 54 | 10 | 903 | 0.28 | 52 | X* | | | | |
| | **128.70** | 7.80 | 33/2 | 14 | 885 | 0.29 | 68 | 9.0 | 938 | 0.20 | 67 | X* | | | | |
| | **237.90** | 6.10 | 39/1 | 7.4 | 885 | 0.20 | 51 | 4.9 | 938 | 0.15 | 49 | X* | | | | |
| | **304.20** | 7.80 | 39/1 | 5.8 | 885 | 0.16 | 50 | 3.8 | 938 | 0.12 | 49 | X* | | | | |



* Caution - The motor power may exceed the gear unit's mechanical torque capacity. Limits Based on 1750rpm input speed.
◈ The mechanical power limit of the solid input shaft type "W" may limit the reducer rating.
All ratings are mechanical. See page 14 for thermal considerations.

| lb | W | 56C |
|---|---|---|
| SK 02040 | 24 | 33 |


Send Quote Requests to info@automatedpt.com
Call +1(800)985-6929 To Order or Order Online At Nordgearmotors.com




# SK 02040 NEMA-C + W Ratings & Combinations

| Model Type | Gear Ratio | | | $n_2$ = Output Speed<br>$T_{2\,max}$ = Output Torque*<br>$HP_{max}$ = Input power ◈<br>$\eta$ = Efficiencies | | | | | | | | | | | | NEMA C-Face* Available Combinations | | | | |
|---|---|---|---|---|---|---|---|---|---|---|---|---|---|---|---|---|---|---|---|---|
| | Total | Helical Gears | Worm Gears | $n_1$ = 875 rpm | | | | $n_1$ = 580 rpm | | | | $n_1$ = 300 rpm | | | | | | | | |
| | $i_{tot}$ | $i_1$ | $\frac{z_2}{z_1} = i_2$ | $n_2$ [rpm] | $T_{2\,max}$ [lb-in] | $HP_{max}$ [hp] | $\eta$ [%] | $n_2$ [rpm] | $T_{2\,max}$ [lb-in] | $HP_{max}$ [hp] | $\eta$ [%] | $n_2$ [rpm] | $T_{2\,max}$ [lb-in] | $HP_{max}$ [hp] | $\eta$ [%] | 56C | 140TC | 180TC | 210TC | 250TC |
| **SK 02040** | 4.40 | 1.15 | 23/6 | 199 | 504 | 0.75 | 87 | 132 | 558 | 0.50 | 86 | 68 | 620 | 0.27 | 85 | X | | | | |
| | 5.09 | 1.33 | 23/6 | 172 | 531 | 0.75 | 87 | 114 | 575 | 0.50 | 86 | 59 | 628 | 0.27 | 84 | X | | | | |
| | 6.63 | 1.73 | 23/6 | 132 | 575 | 0.75 | 86 | 87 | 611 | 0.50 | 85 | 45 | 673 | 0.27 | 84 | X | | | | |
| | 7.51 | 1.96 | 23/6 | 117 | 593 | 0.75 | 86 | 77 | 637 | 0.50 | 85 | 40 | 690 | 0.27 | 84 | X | | | | |
| | 8.82 | 1.15 | 23/3 | 99 | 717 | 0.75 | 82 | 66 | 788 | 0.50 | 81 | 34 | 876 | 0.27 | 79 | X | | | | |
| | 10.20 | 1.33 | 23/3 | 86 | 743 | 0.75 | 82 | 57 | 814 | 0.50 | 80 | 29 | 894 | 0.27 | 79 | X | | | | |
| | 13.27 | 1.73 | 23/3 | 66 | 770 | 0.75 | 81 | 44 | 832 | 0.50 | 80 | 23 | 912 | 0.27 | 78 | X | | | | |
| | 15.03 | 1.96 | 23/3 | 58 | 779 | 0.90 | 80 | 39 | 832 | 0.66 | 79 | 20 | 912 | 0.38 | 78 | X | | | | |
| | 17.10 | 2.23 | 23/3 | 51 | 805 | 0.82 | 80 | 34 | 850 | 0.58 | 79 | 18 | 929 | 0.34 | 78 | X | | | | |
| | 19.56 | 2.55 | 23/3 | 45 | 814 | 0.72 | 80 | 30 | 858 | 0.52 | 79 | 15 | 929 | 0.28 | 78 | X | | | | |
| | 21.95 | 1.33 | 33/2 | 40 | 805 | 0.71 | 72 | 26 | 876 | 0.52 | 70 | 14 | 965 | 0.31 | 68 | X | | | | |
| | 28.55 | 1.73 | 33/2 | 31 | 796 | 0.55 | 71 | 20 | 850 | 0.39 | 69 | 11 | 938 | 0.24 | 67 | X* | | | | |
| | 32.34 | 1.96 | 33/2 | 27 | 814 | 0.50 | 70 | 18 | 867 | 0.36 | 69 | 9.30 | 947 | 0.21 | 67 | X* | | | | |
| | 36.80 | 2.23 | 33/2 | 24 | 832 | 0.46 | 70 | 16 | 885 | 0.32 | 69 | 8.20 | 965 | 0.19 | 67 | X* | | | | |
| | 42.08 | 2.55 | 33/2 | 21 | 858 | 0.42 | 69 | 14 | 912 | 0.29 | 68 | 7.10 | 982 | 0.16 | 67 | X* | | | | |
| | 44.85 | 1.15 | 39/1 | 20 | 894 | 0.51 | 56 | 13 | 982 | 0.39 | 53 | 6.70 | 1089 | 0.23 | 50 | X* | | | | |
| | **46.79** | 6.10 | 23/3 | 19 | 974 | 0.38 | 78 | 12 | 1009 | 0.25 | 77 | 6.40 | 1071 | 0.15 | 77 | X* | | | | |
| | 51.87 | 1.33 | 39/1 | 17 | 885 | 0.43 | 55 | 11 | 965 | 0.32 | 52 | 5.80 | 1062 | 0.20 | 50 | X* | | | | |
| | **59.83** | 7.80 | 23/3 | 15 | 956 | 0.29 | 78 | 9.7 | 1000 | 0.20 | 77 | 5.00 | 1071 | 0.11 | 77 | X* | | | | |
| | 67.47 | 1.73 | 39/1 | 13 | 867 | 0.34 | 53 | 8.6 | 929 | 0.25 | 51 | 4.40 | 1027 | 0.15 | 49 | X* | | | | |
| | 76.44 | 1.96 | 39/1 | 11 | 885 | 0.29 | 53 | 7.6 | 947 | 0.23 | 51 | 3.90 | 1035 | 0.13 | 49 | X* | | | | |
| | 86.97 | 2.23 | 39/1 | 10 | 894 | 0.27 | 52 | 6.7 | 947 | 0.20 | 50 | 3.40 | 1035 | 0.12 | 48 | X* | | | | |
| | 99.45 | 2.55 | 39/1 | 8.8 | 929 | 0.25 | 51 | 5.8 | 982 | 0.17 | 50 | 3.00 | 1062 | 0.11 | 48 | X* | | | | |
| | **100.65** | 6.10 | 33/2 | 8.7 | 974 | 0.20 | 67 | 5.8 | 1009 | 0.13 | 66 | 3.00 | 1071 | 0.08 | 66 | X* | | | | |
| | 115.05 | 2.95 | 39/1 | 7.6 | 938 | 0.23 | 51 | 5.0 | 991 | 0.16 | 49 | 2.60 | 1062 | 0.09 | 48 | X* | | | | |
| | **128.70** | 7.80 | 33/2 | 6.8 | 956 | 0.15 | 67 | 4.5 | 1000 | 0.11 | 66 | 2.30 | 1071 | 0.05 | 66 | X* | | | | |
| | **237.90** | 6.10 | 39/1 | 3.7 | 974 | 0.12 | 49 | 2.4 | 1009 | 0.08 | 48 | 1.30 | 1071 | 0.05 | 47 | X* | | | | |
| | **304.20** | 7.80 | 39/1 | 2.9 | 956 | 0.09 | 48 | 1.9 | 1000 | 0.07 | 47 | 0.99 | 1071 | 0.04 | 47 | X* | | | | |

W + NEMA

* Caution - The motor power may exceed the gear unit's mechanical torque capacity. Limits Based on 1750rpm input speed.
◈ The mechanical power limit of the solid input shaft type "W" may limit the reducer rating.
All ratings are mechanical. See page 14 for thermal considerations.

| lb | W | 56C |
|---|---|---|
| **SK 02040** | 24 | 33 |


Send Quote Requests to info@automatedpt.com
Call +1(800)985-6929 To Order or Order Online At Nordgearmotors.com

# SK 02050
# NEMA-C + W
# Ratings & Combinations





DRIVESYSTEMS

| Model Type | Gear Ratio | | | $n_2$ = Output Speed<br>$T_{2\,max}$ = Output Torque*<br>$HP_{max}$ = Input power ◈<br>η = Efficiencies | | | | | | | | NEMA C-Face* Available Combinations | | | | |
|---|---|---|---|---|---|---|---|---|---|---|---|---|---|---|---|---|
| | | | | $n_1$ =1750 rpm | | | | $n_1$ =1150 rpm | | | | | | | | |
| | $i_{tot}$ | $i_1$ | $\frac{z_2}{z_1} = i_2$ | $n_2$ [rpm] | $T_{2\,max}$ [lb-in] | $HP_{max}$ [hp] | η [%] | $n_2$ [rpm] | $T_{2\,max}$ [lb-in] | $HP_{max}$ [hp] | η [%] | 56C | 140TC | 180TC | 210TC | 250TC |
| SK 02050 | 7.13 | 1.38 | 31/6 | 245 | 929 | 2.00 | 89 | 162 | 1062 | 1.32 | 88 | X | X | | | |
| | 8.17 | 1.58 | 31/6 | 214 | 974 | 2.00 | 89 | 141 | 1097 | 1.32 | 88 | X | X | | | |
| | 9.41 | 1.82 | 31/6 | 186 | 974 | 2.00 | 88 | 123 | 1089 | 1.32 | 87 | X | X | | | |
| | 11.63 | 2.25 | 31/6 | 150 | 1000 | 2.00 | 88 | 99 | 1106 | 1.32 | 87 | X | X | | | |
| | 13.18 | 2.55 | 31/6 | 133 | 1062 | 2.00 | 87 | 88 | 1159 | 1.32 | 86 | X | X | | | |
| | 14.72 | 1.38 | 32/3 | 119 | 1000 | 2.00 | 85 | 78 | 1150 | 1.32 | 83 | X | X | | | |
| | 16.86 | 1.58 | 32/3 | 104 | 1062 | 2.00 | 84 | 69 | 1204 | 1.32 | 83 | X | X | | | |
| | 19.42 | 1.82 | 32/3 | 90 | 1283 | 2.00 | 84 | 59 | 1443 | 1.32 | 82 | X | X | | | |
| | 24.01 | 2.25 | 32/3 | 73 | 1372 | 1.92 | 83 | 48 | 1513 | 1.41 | 82 | X | X* | | | |
| | 27.21 | 2.55 | 32/3 | 64 | 1372 | 1.68 | 83 | 42 | 1496 | 1.23 | 81 | X | X* | | | |
| | 30.94 | 2.90 | 32/3 | 57 | 1372 | 1.51 | 82 | 37 | 1487 | 1.07 | 81 | X | X* | | | |
| | 35.55 | 1.58 | 45/2 | 49 | 1372 | 1.41 | 76 | 32 | 1549 | 1.06 | 74 | X | X* | | | |
| | 40.95 | 1.82 | 45/2 | 43 | 1372 | 1.25 | 75 | 28 | 1540 | 0.94 | 73 | X | X* | | | |
| | 50.63 | 2.25 | 45/2 | 35 | 1372 | 1.03 | 74 | 23 | 1513 | 0.76 | 72 | X | X* | | | |
| | 57.38 | 2.55 | 45/2 | 30 | 1487 | 0.97 | 73 | 20 | 1628 | 0.72 | 71 | X* | X* | | | |
| | 65.25 | 2.90 | 45/2 | 27 | 1487 | 0.87 | 73 | 18 | 1611 | 0.64 | 71 | X* | X* | | | |
| | 80.58 | 1.58 | 51/1 | 22 | 1487 | 0.87 | 60 | 14 | 1682 | 0.66 | 57 | X* | X* | | | |
| | 92.82 | 1.82 | 51/1 | 19 | 1487 | 0.76 | 59 | 12 | 1673 | 0.56 | 56 | X* | X* | | | |
| | 114.75 | 2.25 | 51/1 | 15 | 1487 | 0.62 | 57 | 10 | 1637 | 0.48 | 54 | X* | X* | | | |
| | 130.05 | 2.55 | 51/1 | 13 | 1487 | 0.55 | 56 | 8.9 | 1628 | 0.43 | 54 | X* | X* | | | |
| | 147.90 | 2.90 | 51/1 | 12 | 1549 | 0.54 | 55 | 7.8 | 1682 | 0.39 | 53 | X* | X* | | | |
| | **170.10** | 7.56 | 45/2 | 10 | 1637 | 0.38 | 69 | 6.8 | 1735 | 0.28 | 68 | X* | | | | |
| | **194.18** | 8.63 | 45/2 | 9.0 | 1637 | 0.35 | 68 | 5.9 | 1717 | 0.24 | 67 | X* | | | | |
| | **231.41** | 10.29 | 45/2 | 7.6 | 1637 | 0.29 | 68 | 5.0 | 1708 | 0.20 | 67 | X* | | | | |
| | **341.70** | 6.70 | 51/1 | 5.1 | 1637 | 0.25 | 51 | 3.4 | 1743 | 0.19 | 49 | X* | X* | | | |
| | **385.56** | 7.56 | 51/1 | 4.5 | 1637 | 0.23 | 50 | 3.0 | 1735 | 0.17 | 49 | X* | | | | |
| | **440.13** | 8.63 | 51/1 | 4.0 | 1637 | 0.20 | 50 | 2.6 | 1717 | 0.15 | 49 | X* | | | | |
| | **524.79** | 10.29 | 51/1 | 3.3 | 1637 | 0.17 | 49 | 2.2 | 1708 | 0.12 | 48 | X* | | | | |

W + NEMA

* Caution - The motor power may exceed the gear unit's mechanical torque capacity. Limits Based on 1750rpm input speed.
◈ The mechanical power limit of the solid input shaft type "W" may limit the reducer rating.
All ratings are mechanical. See page 14 for thermal considerations.

| lb | W | 56C | 140TC |
|---|---|---|---|
| SK 02050 | 44 | 55 | 55 |


Send Quote Requests to info@automatedpt.com
Call +1(800)985-6929 To Order or Order Online At Nordgearmotors.com





# SK 02050
# NEMA-C + W
# Ratings & Combinations

| Model Type | Gear Ratio | | | $n_2$ = Output Speed<br>$T_{2\,max}$ = Output Torque*<br>$HP_{max}$ = Input power ◈<br>$\eta$ = Efficiencies | | | | | | | | | | | | NEMA C-Face* Available Combinations | | | | |
|---|---|---|---|---|---|---|---|---|---|---|---|---|---|---|---|---|---|---|---|---|
| | Total | Helical Gears | Worm Gears | $n_1$ = 875 rpm | | | | $n_1$ = 580 rpm | | | | $n_1$ = 300 rpm | | | | | | | | |
| | $i_{tot}$ | $i_1$ | $\frac{z_2}{z_1} = i_2$ | $n_2$ [rpm] | $T_{2\,max}$ [lb-in] | $HP_{max}$ [hp] | $\eta$ [%] | $n_2$ [rpm] | $T_{2\,max}$ [lb-in] | $HP_{max}$ [hp] | $\eta$ [%] | $n_2$ [rpm] | $T_{2\,max}$ [lb-in] | $HP_{max}$ [hp] | $\eta$ [%] | 56C | 140TC | 180TC | 210TC | 250TC |
| **SK 02050** | 7.13 | 1.38 | 31/6 | 123 | 1142 | 1.00 | 87 | 81 | 1204 | 0.66 | 86 | 42 | 1186 | 0.36 | 85 | X | X | | | |
| | 8.17 | 1.58 | 31/6 | 107 | 1177 | 1.00 | 87 | 71 | 1221 | 0.66 | 86 | 37 | 1195 | 0.36 | 84 | X | X | | | |
| | 9.41 | 1.82 | 31/6 | 93 | 1159 | 1.00 | 86 | 62 | 1230 | 0.66 | 85 | 32 | 1212 | 0.36 | 84 | X | X | | | |
| | 11.63 | 2.25 | 31/6 | 75 | 1159 | 1.00 | 86 | 50 | 1230 | 0.66 | 85 | 26 | 1239 | 0.36 | 84 | X | X | | | |
| | 13.18 | 2.55 | 31/6 | 66 | 1212 | 1.00 | 86 | 44 | 1266 | 0.66 | 85 | 23 | 1248 | 0.36 | 84 | X | X | | | |
| | 14.72 | 1.38 | 32/3 | 59 | 1230 | 1.00 | 82 | 39 | 1336 | 0.66 | 81 | 20 | 1478 | 0.36 | 79 | X | X | | | |
| | 16.86 | 1.58 | 32/3 | 52 | 1283 | 1.00 | 82 | 34 | 1389 | 0.66 | 80 | 18 | 1522 | 0.36 | 79 | X | X | | | |
| | 19.42 | 1.82 | 32/3 | 45 | 1522 | 1.00 | 81 | 30 | 1637 | 0.66 | 80 | 15 | 1788 | 0.36 | 79 | X | X | | | |
| | 24.01 | 2.25 | 32/3 | 36 | 1593 | 1.13 | 81 | 24 | 1682 | 0.80 | 80 | 12 | 1841 | 0.46 | 78 | X | X* | | | |
| | 27.21 | 2.55 | 32/3 | 32 | 1575 | 1.01 | 80 | 21 | 1664 | 0.70 | 79 | 11 | 1797 | 0.40 | 78 | X | X* | | | |
| | 30.94 | 2.90 | 32/3 | 28 | 1549 | 0.86 | 80 | 19 | 1646 | 0.63 | 79 | 9.7 | 1761 | 0.35 | 78 | X | X* | | | |
| | 35.55 | 1.58 | 45/2 | 25 | 1655 | 0.91 | 72 | 16 | 1788 | 0.64 | 70 | 8.4 | 1965 | 0.39 | 68 | X | X* | | | |
| | 40.95 | 1.82 | 45/2 | 21 | 1628 | 0.75 | 72 | 14 | 1743 | 0.55 | 70 | 7.3 | 1912 | 0.32 | 68 | X | X* | | | |
| | 50.63 | 2.25 | 45/2 | 17 | 1593 | 0.60 | 71 | 11 | 1682 | 0.43 | 69 | 5.9 | 1841 | 0.25 | 67 | X | X* | | | |
| | 57.38 | 2.55 | 45/2 | 15 | 1699 | 0.58 | 70 | 10 | 1797 | 0.42 | 69 | 5.2 | 1947 | 0.24 | 67 | X* | X* | | | |
| | 65.25 | 2.90 | 45/2 | 13 | 1682 | 0.50 | 70 | 8.9 | 1779 | 0.38 | 68 | 4.6 | 1903 | 0.20 | 67 | X* | X* | | | |
| | 80.58 | 1.58 | 51/1 | 11 | 1797 | 0.58 | 55 | 7.2 | 1938 | 0.43 | 52 | 3.7 | 2133 | 0.25 | 50 | X* | X* | | | |
| | 92.82 | 1.82 | 51/1 | 9.4 | 1770 | 0.48 | 54 | 6.2 | 1894 | 0.36 | 52 | 3.2 | 2071 | 0.21 | 49 | X* | X* | | | |
| | 114.75 | 2.25 | 51/1 | 7.6 | 1726 | 0.39 | 53 | 5.1 | 1823 | 0.29 | 51 | 2.6 | 1991 | 0.17 | 49 | X* | X* | | | |
| | 130.05 | 2.55 | 51/1 | 6.7 | 1699 | 0.35 | 52 | 4.5 | 1797 | 0.25 | 50 | 2.3 | 1947 | 0.15 | 48 | X* | X* | | | |
| | 147.90 | 2.90 | 51/1 | 5.9 | 1752 | 0.32 | 51 | 3.9 | 1850 | 0.23 | 50 | 2.0 | 1982 | 0.13 | 48 | X* | X* | | | |
| | **170.10** | 7.56 | 45/2 | 5.1 | 1779 | 0.21 | 67 | 3.4 | 1850 | 0.15 | 66 | 1.8 | 1974 | 0.08 | 66 | X* | | | | |
| | **194.18** | 8.63 | 45/2 | 4.5 | 1761 | 0.19 | 67 | 3.0 | 1832 | 0.13 | 66 | 1.5 | 1965 | 0.07 | 66 | X* | | | | |
| | **231.41** | 10.29 | 45/2 | 3.8 | 1752 | 0.16 | 66 | 2.5 | 1814 | 0.11 | 66 | 1.3 | 1867 | 0.05 | 65 | X* | | | | |
| | **341.70** | 6.70 | 51/1 | 2.6 | 1797 | 0.15 | 49 | 1.7 | 1867 | 0.11 | 48 | 0.88 | 1982 | 0.05 | 47 | X* | X* | | | |
| | **385.56** | 7.56 | 51/1 | 2.3 | 1779 | 0.13 | 48 | 1.5 | 1850 | 0.09 | 48 | 0.78 | 1974 | 0.05 | 47 | X* | | | | |
| | **440.13** | 8.63 | 51/1 | 2.0 | 1761 | 0.12 | 48 | 1.3 | 1832 | 0.08 | 47 | 0.68 | 1965 | 0.04 | 47 | X* | | | | |
| | **524.79** | 10.29 | 51/1 | 1.7 | 1752 | 0.09 | 48 | 1.1 | 1814 | 0.07 | 47 | 0.57 | 1947 | 0.04 | 47 | X* | | | | |



* Caution - The motor power may exceed the gear unit's mechanical torque capacity. Limits Based on 1750rpm input speed.
◈ The mechanical power limit of the solid input shaft type "W" may limit the reducer rating.
All ratings are mechanical. See page 14 for thermal considerations.

| lb | W | 56C | 140TC |
|---|---|---|---|
| **SK 02050** | 44 | 55 | 55 |


Send Quote Requests to info@automatedpt.com
Call +1(800)985-6929 To Order or Order Online At Nordgearmotors.com

# SK 13050
# NEMA-C + W
# Ratings & Combinations





DRIVESYSTEMS

| Model Type | Gear Ratio | | | $n_2$ = Output Speed<br>$T_{2\,max}$ = Output Torque*<br>$HP_{max}$ = Input power ◈<br>η = Efficiencies | | | | | | | | NEMA C-Face* Available Combinations | | | | |
|---|---|---|---|---|---|---|---|---|---|---|---|---|---|---|---|---|
| | | | | $n_1$ =1750 rpm | | | | $n_1$ =1150 rpm | | | | | | | | |
| | $i_{tot}$ | $i_1$ | $\frac{z_2}{z_1} = i_2$ | $n_2$ [rpm] | $T_{2\,max}$ [lb-in] | $HP_{max}$ [hp] | η [%] | $n_2$ [rpm] | $T_{2\,max}$ [lb-in] | $HP_{max}$ [hp] | η [%] | 56C | 140TC | 180TC | 210TC | 250TC |
| SK 13050 | **41.74** | 8.07 | 31/6 | 42 | 974 | 0.50 | 85 | 28 | 974 | 0.33 | 84 | X* | | | | |
| | **48.08** | 9.30 | 31/6 | 36 | 974 | 0.50 | 84 | 24 | 1018 | 0.33 | 84 | X* | | | | |
| | **59.44** | 11.50 | 31/6 | 29 | 1150 | 0.50 | 84 | 19 | 1195 | 0.33 | 83 | X* | | | | |
| | **67.37** | 13.03 | 31/6 | 26 | 1150 | 0.50 | 84 | 17 | 1195 | 0.33 | 83 | X* | | | | |
| | **76.61** | 14.82 | 31/6 | 23 | 1239 | 0.50 | 84 | 15 | 1248 | 0.33 | 83 | X* | | | | |
| | **86.15** | 8.07 | 32/3 | 20 | 1593 | 0.50 | 79 | 13 | 1682 | 0.33 | 78 | X* | | | | |
| | **99.23** | 9.30 | 32/3 | 18 | 1682 | 0.50 | 79 | 12 | 1761 | 0.33 | 78 | X* | | | | |
| | **122.68** | 11.50 | 32/3 | 14 | 1726 | 0.50 | 78 | 9.4 | 1788 | 0.34 | 78 | X* | | | | |
| | **139.04** | 13.03 | 32/3 | 13 | 1726 | 0.46 | 78 | 8.3 | 1797 | 0.31 | 78 | X* | | | | |
| | **158.12** | 14.82 | 32/3 | 11 | 1726 | 0.39 | 78 | 7.3 | 1797 | 0.27 | 77 | X* | | | | |
| | **181.66** | 8.07 | 45/2 | 9.6 | 1726 | 0.39 | 68 | 6.4 | 1823 | 0.28 | 67 | X* | | | | |
| | **209.25** | 9.30 | 45/2 | 8.4 | 1726 | 0.34 | 68 | 5.5 | 1805 | 0.24 | 67 | X* | | | | |
| | **293.19** | 13.03 | 45/2 | 6.0 | 1726 | 0.24 | 67 | 3.9 | 1797 | 0.16 | 67 | X* | | | | |
| | **333.43** | 14.82 | 45/2 | 5.2 | 1726 | 0.21 | 67 | 3.5 | 1797 | 0.15 | 66 | X* | | | | |
| | **411.76** | 8.07 | 51/1 | 4.3 | 1726 | 0.24 | 50 | 2.8 | 1823 | 0.16 | 49 | X* | | | | |
| | **474.31** | 9.30 | 51/1 | 3.7 | 1726 | 0.20 | 50 | 2.4 | 1805 | 0.13 | 49 | X* | | | | |
| | **586.37** | 11.50 | 51/1 | 3.0 | 1726 | 0.17 | 49 | 2.0 | 1788 | 0.12 | 48 | X* | | | | |
| | **664.56** | 13.03 | 51/1 | 2.6 | 1726 | 0.15 | 49 | 1.7 | 1797 | 0.11 | 48 | X* | | | | |
| | **755.77** | 14.82 | 51/1 | 2.3 | 1726 | 0.13 | 48 | 1.5 | 1797 | 0.09 | 48 | X* | | | | |
| | **869.21** | 38.63 | 45/2 | 2.0 | 1726 | 0.08 | 66 | 1.3 | 1805 | 0.05 | 65 | X* | | | | |
| | **992.23** | 44.10 | 45/2 | 1.8 | 1726 | 0.08 | 66 | 1.2 | 1797 | 0.05 | 65 | X* | | | | |
| | **1332.04** | 59.20 | 45/2 | 1.3 | 1726 | 0.05 | 65 | 0.87 | 1779 | 0.04 | 65 | X* | | | | |
| | **1746.09** | 34.24 | 51/1 | 1.0 | 1726 | 0.05 | 47 | 0.66 | 1814 | 0.04 | 47 | X* | | | | |
| | **1970.21** | 38.63 | 51/1 | 0.89 | 1726 | 0.05 | 47 | 0.59 | 1805 | 0.04 | 47 | X* | | | | |
| | **2249.06** | 44.10 | 51/1 | 0.78 | 1726 | 0.04 | 47 | 0.51 | 1797 | 0.03 | 47 | X* | | | | |
| | **3019.29** | 59.20 | 51/1 | 0.58 | 1726 | 0.04 | 47 | 0.38 | 1779 | 0.03 | 46 | X* | | | | |

W + NEMA

* Caution - The motor power may exceed the gear unit's mechanical torque capacity. Limits Based on 1750rpm input speed.
◈ The mechanical power limit of the solid input shaft type "W" may limit the reducer rating.
All ratings are mechanical. See page 14 for thermal considerations.

| lb | W | 56C |
|---|---|---|
| **SK 13050** | 55 | 66 |


Send Quote Requests to info@automatedpt.com
Call +1(800)985-6929 To Order or Order Online At Nordgearmotors.com




# SK 13050 NEMA-C + W Ratings & Combinations

| Model Type | Gear Ratio | | | $n_2$ = Output Speed<br>$T_{2\,max}$ = Output Torque*<br>$HP_{max}$ = Input power ◈<br>$\eta$ = Efficiencies | | | | | | | | | | | | NEMA C-Face* Available Combinations | | | | |
|---|---|---|---|---|---|---|---|---|---|---|---|---|---|---|---|---|---|---|---|---|
| | Total | Helical Gears | Worm Gears | $n_1$ = 875 rpm | | | | $n_1$ = 580 rpm | | | | $n_1$ = 300 rpm | | | | | | | | |
| | $i_{tot}$ | $i_1$ | $\frac{z_2}{z_1} = i_2$ | $n_2$ [rpm] | $T_{2\,max}$ [lb-in] | $HP_{max}$ [hp] | $\eta$ [%] | $n_2$ [rpm] | $T_{2\,max}$ [lb-in] | $HP_{max}$ [hp] | $\eta$ [%] | $n_2$ [rpm] | $T_{2\,max}$ [lb-in] | $HP_{max}$ [hp] | $\eta$ [%] | 56C | 140TC | 180TC | 210TC | 250TC |
| SK 13050 | **41.74** | 8.07 | 31/6 | 21 | 974 | 0.25 | 84 | 14 | 965 | 0.17 | 83 | 7.2 | 965 | 0.09 | 83 | X* | | | | |
| | **48.08** | 9.30 | 31/6 | 18 | 1044 | 0.25 | 83 | 12 | 1062 | 0.17 | 83 | 6.2 | 1062 | 0.09 | 83 | X* | | | | |
| | **59.44** | 11.50 | 31/6 | 15 | 1221 | 0.25 | 83 | 9.8 | 1221 | 0.17 | 83 | 5.0 | 1221 | 0.09 | 83 | X* | | | | |
| | **67.37** | 13.03 | 31/6 | 13 | 1230 | 0.25 | 83 | 8.6 | 1230 | 0.17 | 83 | 4.5 | 1230 | 0.09 | 83 | X* | | | | |
| | **76.61** | 14.82 | 31/6 | 11 | 1248 | 0.25 | 83 | 7.6 | 1248 | 0.17 | 83 | 3.9 | 1230 | 0.09 | 82 | X* | | | | |
| | **86.15** | 8.07 | 32/3 | 10 | 1717 | 0.25 | 78 | 6.7 | 1761 | 0.17 | 77 | 3.5 | 1761 | 0.09 | 77 | X* | | | | |
| | **99.23** | 9.30 | 32/3 | 8.8 | 1805 | 0.25 | 78 | 5.8 | 1876 | 0.17 | 77 | 3.0 | 2009 | 0.09 | 77 | X* | | | | |
| | **122.68** | 11.50 | 32/3 | 7.1 | 1850 | 0.27 | 77 | 4.7 | 1903 | 0.19 | 77 | 2.4 | 2044 | 0.11 | 77 | X* | | | | |
| | **139.04** | 13.03 | 32/3 | 6.3 | 1841 | 0.24 | 77 | 4.2 | 1912 | 0.16 | 77 | 2.2 | 2044 | 0.09 | 77 | X* | | | | |
| | **158.12** | 14.82 | 32/3 | 5.5 | 1841 | 0.21 | 77 | 3.7 | 1920 | 0.15 | 77 | 1.9 | 2036 | 0.08 | 77 | X* | | | | |
| | **181.66** | 8.07 | 45/2 | 4.8 | 1867 | 0.21 | 67 | 3.2 | 1947 | 0.15 | 66 | 1.7 | 2080 | 0.08 | 66 | X* | | | | |
| | **209.25** | 9.30 | 45/2 | 4.2 | 1850 | 0.19 | 67 | 2.8 | 1929 | 0.13 | 66 | 1.4 | 2062 | 0.07 | 66 | X* | | | | |
| | **293.19** | 13.03 | 45/2 | 3.0 | 1841 | 0.13 | 66 | 2.0 | 1912 | 0.09 | 66 | 1.0 | 2044 | 0.05 | 65 | X* | | | | |
| | **333.43** | 14.82 | 45/2 | 2.6 | 1841 | 0.12 | 66 | 1.7 | 1920 | 0.08 | 66 | 0.90 | 2036 | 0.04 | 65 | X* | | | | |
| | **411.76** | 8.07 | 51/1 | 2.1 | 1867 | 0.13 | 48 | 1.4 | 1947 | 0.09 | 48 | 0.73 | 2080 | 0.05 | 47 | X* | | | | |
| | **474.31** | 9.30 | 51/1 | 1.8 | 1850 | 0.11 | 48 | 1.2 | 1929 | 0.08 | 47 | 0.63 | 2062 | 0.04 | 47 | X* | | | | |
| | **586.37** | 11.50 | 51/1 | 1.5 | 1850 | 0.09 | 48 | 0.99 | 1903 | 0.07 | 47 | 0.51 | 2044 | 0.04 | 47 | X* | | | | |
| | **664.56** | 13.03 | 51/1 | 1.3 | 1841 | 0.08 | 47 | 0.87 | 1912 | 0.05 | 47 | 0.45 | 2044 | 0.03 | 47 | X* | | | | |
| | **755.77** | 14.82 | 51/1 | 1.2 | 1841 | 0.08 | 47 | 0.77 | 1920 | 0.05 | 47 | 0.40 | 2036 | 0.03 | 46 | X* | | | | |
| | **869.21** | 38.63 | 45/2 | 1.0 | 1841 | 0.04 | 65 | 0.67 | 1885 | 0.03 | 65 | 0.35 | 2018 | 0.01 | 65 | X* | | | | |
| | **992.23** | 44.10 | 45/2 | 0.88 | 1832 | 0.04 | 65 | 0.58 | 1858 | 0.03 | 65 | 0.30 | 2027 | 0.01 | 65 | X* | | | | |
| | **1332.04** | 59.20 | 45/2 | 0.66 | 1797 | 0.03 | 65 | 0.44 | 1832 | 0.01 | 65 | 0.23 | 2044 | 0.01 | 65 | X* | | | | |
| | **1746.09** | 34.24 | 51/1 | 0.50 | 1858 | 0.03 | 47 | 0.33 | 1903 | 0.03 | 46 | 0.17 | 2000 | 0.01 | 46 | X* | | | | |
| | **1970.21** | 38.63 | 51/1 | 0.44 | 1841 | 0.03 | 46 | 0.29 | 1885 | 0.01 | 46 | 0.15 | 2018 | 0.01 | 46 | X* | | | | |
| | **2249.06** | 44.10 | 51/1 | 0.39 | 1832 | 0.03 | 46 | 0.26 | 1858 | 0.01 | 46 | 0.13 | 2027 | 0.01 | 46 | X* | | | | |
| | **3019.29** | 59.20 | 51/1 | 0.29 | 1797 | 0.01 | 46 | 0.19 | 1832 | 0.01 | 46 | 0.10 | 2044 | 0.01 | 46 | X* | | | | |



* Caution - The motor power may exceed the gear unit's mechanical torque capacity. Limits Based on 1750rpm input speed.
◈ The mechanical power limit of the solid input shaft type "W" may limit the reducer rating.
All ratings are mechanical. See page 14 for thermal considerations.

| lb | W | 56C |
|---|---|---|
| SK 13050 | 55 | 66 |


Send Quote Requests to info@automatedpt.com
Call +1(800)985-6929 To Order or Order Online At Nordgearmotors.com

# SK 12063
# NEMA-C + W
# Ratings & Combinations





DRIVESYSTEMS

| Model Type | Gear Ratio | | | $n_2$ = Output Speed<br>$T_{2\,max}$ = Output Torque*<br>$HP_{max}$ = Input power ◈<br>η = Efficiencies | | | | | | | | NEMA C-Face* Available Combinations | | | | |
|---|---|---|---|---|---|---|---|---|---|---|---|---|---|---|---|---|
| | | | | $n_1$ =1750 rpm | | | | $n_1$ =1150 rpm | | | | | | | | |
| | Total | Helical Gears | Worm Gears | $n_2$ | $T_{2\,max}$ | $HP_{max}$ | η | $n_2$ | $T_{2\,max}$ | $HP_{max}$ | η | | | | | |
| | $i_{tot}$ | $i_1$ | $\frac{z_2}{z_1} = i_2$ | [rpm] | [lb-in] | [hp] | [%] | [rpm] | [lb-in] | [hp] | [%] | 56C | 140TC | 180TC | 210TC | 250TC |
| SK 12063 | 7.43 | 1.35 | 33/6 | 236 | 1381 | 3.00 | 90 | 155 | 1584 | 1.98 | 89 | X | X | X* | | |
| | 8.47 | 1.54 | 33/6 | 207 | 1469 | 3.00 | 90 | 136 | 1664 | 1.98 | 89 | X | X | X* | | |
| | 9.96 | 1.81 | 33/6 | 176 | 1504 | 3.00 | 89 | 116 | 1690 | 1.98 | 88 | X | X | X* | | |
| | 11.22 | 2.04 | 33/6 | 156 | 1549 | 3.00 | 89 | 103 | 1717 | 1.98 | 88 | X | X | X* | | |
| | 12.76 | 2.32 | 33/6 | 137 | 1593 | 3.00 | 89 | 91 | 1752 | 1.98 | 87 | X | X | X* | | |
| | 15.57 | 2.83 | 33/6 | 112 | 1682 | 3.00 | 88 | 74 | 1823 | 1.98 | 87 | X | X | X* | | |
| | 18.99 | 1.54 | 37/3 | 92 | 1903 | 3.00 | 85 | 61 | 2159 | 1.98 | 83 | X | X | X* | | |
| | 22.32 | 1.81 | 37/3 | 78 | 2168 | 3.00 | 84 | 52 | 2434 | 1.98 | 83 | X | X | X* | | |
| | 25.15 | 2.04 | 37/3 | 70 | 2168 | 2.87 | 84 | 46 | 2407 | 2.14 | 82 | X | X | X* | | |
| | 28.61 | 2.32 | 37/3 | 61 | 2168 | 2.53 | 83 | 40 | 2390 | 1.85 | 82 | X | X | X* | | |
| | 34.89 | 2.83 | 37/3 | 50 | 2319 | 2.24 | 82 | 33 | 2522 | 1.64 | 81 | X | X | X* | | |
| | 38.92 | 1.81 | 43/2 | 45 | 2168 | 2.01 | 77 | 30 | 2434 | 1.54 | 75 | X | X* | X* | | |
| | 43.86 | 2.04 | 43/2 | 40 | 2212 | 1.82 | 77 | 26 | 2460 | 1.37 | 74 | X | X* | X* | | |
| | 49.88 | 2.32 | 43/2 | 35 | 2319 | 1.69 | 76 | 23 | 2549 | 1.27 | 73 | X | X* | X* | | |
| | 60.85 | 2.83 | 43/2 | 29 | 2478 | 1.51 | 75 | 19 | 2690 | 1.13 | 72 | X | X* | X* | | |
| | 68.37 | 3.18 | 43/2 | 26 | 2611 | 1.46 | 74 | 17 | 2823 | 1.06 | 72 | X | X* | | | |
| | 77.40 | 3.60 | 43/2 | 23 | 2699 | 1.35 | 73 | 15 | 2894 | 0.97 | 71 | X | X* | | | |
| | 92.31 | 1.81 | 51/1 | 19 | 2611 | 1.27 | 62 | 13 | 2929 | 1.05 | 58 | X | X* | X* | | |
| | 104.04 | 2.04 | 51/1 | 17 | 2611 | 1.15 | 61 | 11 | 2903 | 0.88 | 57 | X | X* | X* | | |
| | 118.32 | 2.32 | 51/1 | 15 | 2611 | 1.06 | 59 | 9.8 | 2876 | 0.80 | 56 | X | X* | X* | | |
| | 144.33 | 2.83 | 51/1 | 12 | 2655 | 0.87 | 58 | 8.0 | 2885 | 0.67 | 55 | X* | X* | X* | | |
| | 162.18 | 3.18 | 51/1 | 11 | 2744 | 0.84 | 57 | 7.1 | 2965 | 0.62 | 54 | X* | X* | | | |
| | 183.60 | 3.60 | 51/1 | 9.5 | 2876 | 0.78 | 56 | 6.3 | 3089 | 0.58 | 53 | X* | X* | | | |
| | **195.86✦** | 9.11 | 43/2 | 8.9 | 3186 | 0.66 | 69 | 5.9 | 3336 | 0.47 | 67 | X* | | | | |
| | **223.17✦** | 10.38 | 43/2 | 7.8 | 3186 | 0.58 | 68 | 5.2 | 3319 | 0.40 | 67 | X* | | | | |
| | **264.24✦** | 12.29 | 43/2 | 6.6 | 3098 | 0.48 | 67 | 4.4 | 3089 | 0.32 | 66 | X* | | | | |
| | **413.10✦** | 8.10 | 51/1 | 4.2 | 3186 | 0.42 | 51 | 2.8 | 3354 | 0.31 | 49 | X* | X* | | | |
| | **464.61✦** | 9.11 | 51/1 | 3.8 | 3186 | 0.39 | 50 | 2.5 | 3336 | 0.28 | 48 | X* | | | | |
| | **529.38✦** | 10.38 | 51/1 | 3.3 | 3186 | 0.34 | 50 | 2.2 | 3319 | 0.24 | 48 | X* | | | | |
| | **626.79✦** | 12.29 | 51/1 | 2.8 | 3186 | 0.29 | 49 | 1.8 | 3310 | 0.20 | 48 | X* | | | | |



* Caution - The motor power may exceed the gear unit's mechanical torque capacity. Limits Based on 1750rpm input speed.
✦ Non-footed units only.
◈ The mechanical power limit of the solid input shaft type "W" may limit the reducer rating.
All ratings are mechanical. See page 14 for thermal considerations.

| lb | W | 56C | 140TC | 180TC |
|---|---|---|---|---|
| SK 12063 | 53 | 64 | 64 | 79 |


Send Quote Requests to info@automatedpt.com
Call +1(800)985-6929 To Order or Order Online At Nordgearmotors.com





# SK 12063
# NEMA-C + W
# Ratings & Combinations

| Model Type | Gear Ratio | | | $n_2$ = Output Speed<br>$T_{2\,max}$ = Output Torque*<br>$HP_{max}$ = Input power ◈<br>η = Efficiencies | | | | | | | | | | | | NEMA C-Face* Available Combinations | | | | |
|---|---|---|---|---|---|---|---|---|---|---|---|---|---|---|---|---|---|---|---|---|
| | Total | Helical Gears | Worm Gears | $n_1$ = 875 rpm | | | | $n_1$ = 580 rpm | | | | $n_1$ = 300 rpm | | | | | | | | |
| | $i_{tot}$ | $i_1$ | $\frac{z_2}{z_1} = i_2$ | $n_2$ [rpm] | $T_{2\,max}$ [lb-in] | $HP_{max}$ [hp] | η [%] | $n_2$ [rpm] | $T_{2\,max}$ [lb-in] | $HP_{max}$ [hp] | η [%] | $n_2$ [rpm] | $T_{2\,max}$ [lb-in] | $HP_{max}$ [hp] | η [%] | 56C | 140TC | 180TC | 210TC | 250TC |
| SK 12063 | 7.43 | 1.35 | 33/6 | 118 | 1708 | 1.50 | 88 | 78 | 1858 | 0.99 | 87 | 40 | 2044 | 0.54 | 85 | X | X | X* | | |
| | 8.47 | 1.54 | 33/6 | 103 | 1779 | 1.50 | 88 | 68 | 1929 | 0.99 | 87 | 35 | 2115 | 0.54 | 85 | X | X | X* | | |
| | 9.96 | 1.81 | 33/6 | 88 | 1788 | 1.50 | 87 | 58 | 1920 | 0.99 | 86 | 30 | 2097 | 0.54 | 85 | X | X | X* | | |
| | 11.22 | 2.04 | 33/6 | 78 | 1814 | 1.50 | 87 | 52 | 1929 | 0.99 | 86 | 27 | 2106 | 0.54 | 84 | X | X | X* | | |
| | 12.76 | 2.32 | 33/6 | 69 | 1850 | 1.50 | 87 | 45 | 1947 | 0.99 | 86 | 24 | 2124 | 0.54 | 84 | X | X | X* | | |
| | 15.57 | 2.83 | 33/6 | 56 | 1903 | 1.50 | 86 | 37 | 2018 | 0.99 | 85 | 19 | 2159 | 0.54 | 84 | X | X | X* | | |
| | 18.99 | 1.54 | 37/3 | 46 | 2310 | 1.50 | 82 | 31 | 2496 | 0.99 | 80 | 16 | 2735 | 0.54 | 78 | X | X | X* | | |
| | 22.32 | 1.81 | 37/3 | 39 | 2575 | 1.50 | 81 | 26 | 2761 | 0.99 | 80 | 13 | 3027 | 0.54 | 77 | X | X | X* | | |
| | 25.15 | 2.04 | 37/3 | 35 | 2540 | 1.74 | 81 | 23 | 2699 | 1.25 | 79 | 12 | 2956 | 0.74 | 77 | X | X | X* | | |
| | 28.61 | 2.32 | 37/3 | 31 | 2513 | 1.54 | 80 | 20 | 2646 | 1.06 | 79 | 10 | 2885 | 0.59 | 77 | X | X | X* | | |
| | 34.89 | 2.83 | 37/3 | 25 | 2628 | 1.30 | 80 | 17 | 2779 | 0.97 | 78 | 8.6 | 2982 | 0.54 | 76 | X | X | X* | | |
| | 38.92 | 1.81 | 43/2 | 22 | 2575 | 1.23 | 73 | 15 | 2761 | 0.92 | 71 | 7.7 | 3027 | 0.55 | 68 | X | X* | X* | | |
| | 43.86 | 2.04 | 43/2 | 20 | 2593 | 1.14 | 72 | 13 | 2761 | 0.82 | 70 | 6.8 | 3018 | 0.48 | 68 | X | X* | X* | | |
| | 49.88 | 2.32 | 43/2 | 18 | 2690 | 1.07 | 72 | 12 | 2832 | 0.76 | 70 | 6.0 | 3089 | 0.44 | 67 | X | X* | X* | | |
| | 60.85 | 2.83 | 43/2 | 14 | 2805 | 0.87 | 71 | 9.50 | 2974 | 0.64 | 69 | 4.9 | 3186 | 0.38 | 67 | X | X* | | | |
| | 68.37 | 3.18 | 43/2 | 13 | 2920 | 0.86 | 70 | 8.50 | 3106 | 0.62 | 68 | 4.4 | 3310 | 0.35 | 66 | X | X* | | | |
| | 77.40 | 3.60 | 43/2 | 11 | 3000 | 0.75 | 70 | 7.50 | 3177 | 0.55 | 68 | 3.9 | 3390 | 0.32 | 66 | X | X* | | | |
| | 92.31 | 1.81 | 51/1 | 9.5 | 3106 | 0.83 | 56 | 6.30 | 3328 | 0.63 | 53 | 3.2 | 3646 | 0.38 | 49 | X | X* | X* | | |
| | 104.04 | 2.04 | 51/1 | 8.4 | 3062 | 0.74 | 55 | 5.60 | 3257 | 0.55 | 52 | 2.9 | 3558 | 0.34 | 49 | X | X* | X* | | |
| | 118.32 | 2.32 | 51/1 | 7.4 | 3027 | 0.66 | 54 | 4.90 | 3186 | 0.48 | 51 | 2.5 | 3478 | 0.28 | 49 | X | X* | X* | | |
| | 144.33 | 2.83 | 51/1 | 6.1 | 3009 | 0.55 | 53 | 4.00 | 3186 | 0.40 | 50 | 2.1 | 3416 | 0.24 | 48 | X* | X* | X* | | |
| | 162.18 | 3.18 | 51/1 | 5.4 | 3071 | 0.51 | 52 | 3.60 | 3266 | 0.38 | 50 | 1.8 | 3478 | 0.20 | 48 | X* | X* | | | |
| | 183.60 | 3.60 | 51/1 | 4.8 | 3195 | 0.48 | 51 | 3.20 | 3390 | 0.35 | 49 | 1.6 | 3611 | 0.20 | 47 | X* | X* | | | |
| | **195.86✦** | 9.11 | 43/2 | 4.5 | 3416 | 0.38 | 66 | 3.00 | 3558 | 0.25 | 66 | 1.5 | 3814 | 0.13 | 65 | X* | | | | |
| | **223.17✦** | 10.38 | 43/2 | 3.9 | 3407 | 0.32 | 66 | 2.60 | 3540 | 0.23 | 65 | 1.3 | 3797 | 0.12 | 65 | X* | | | | |
| | **264.24✦** | 12.29 | 43/2 | 3.3 | 3089 | 0.24 | 66 | 2.20 | 3044 | 0.16 | 65 | 1.1 | 2991 | 0.08 | 64 | X* | | | | |
| | **413.10✦** | 8.10 | 51/1 | 2.1 | 3443 | 0.24 | 48 | 1.40 | 3584 | 0.17 | 47 | 0.73 | 3832 | 0.09 | 46 | X* | X* | | | |
| | **464.61✦** | 9.11 | 51/1 | 1.9 | 3416 | 0.21 | 48 | 1.20 | 3558 | 0.15 | 47 | 0.65 | 3814 | 0.08 | 46 | X* | | | | |
| | **529.38✦** | 10.38 | 51/1 | 1.7 | 3407 | 0.20 | 47 | 1.10 | 3540 | 0.13 | 46 | 0.57 | 3797 | 0.08 | 46 | X* | | | | |
| | **626.79✦** | 12.29 | 51/1 | 1.4 | 3407 | 0.16 | 47 | 0.93 | 3531 | 0.11 | 46 | 0.48 | 3770 | 0.07 | 45 | X* | | | | |

W + NEMA

* Caution - The motor power may exceed the gear unit's mechanical torque capacity. Limits Based on 1750rpm input speed.
✦ Non-footed units only.
◈ The mechanical power limit of the solid input shaft type "W" may limit the reducer rating.
All ratings are mechanical. See page 14 for thermal considerations.

| lb | W | 56C | 140TC | 180TC |
|---|---|---|---|---|
| **SK 12063** | 53 | 64 | 64 | 79 |


Send Quote Requests to info@automatedpt.com
Call +1(800)985-6929 To Order or Order Online At Nordgearmotors.com

# SK 13063
# NEMA-C + W
# Ratings & Combinations

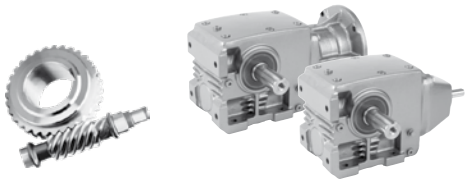

DRIVESYSTEMS

| Model Type | Gear Ratio | | | $n_2$ = Output Speed<br>$T_{2\,max}$ = Output Torque*<br>$HP_{max}$ = Input power ◈<br>η = Efficiencies | | | | | | | | NEMA C-Face* Available Combinations | | | | |
|---|---|---|---|---|---|---|---|---|---|---|---|---|---|---|---|---|
| | | | | $n_1$ =1750 rpm | | | | $n_1$ =1150 rpm | | | | | | | | |
| | Total | Helical Gears | Worm Gears | $n_2$ | $T_{2\,max}$ | $HP_{max}$ | η | $n_2$ | $T_{2\,max}$ | $HP_{max}$ | η | | | | | |
| | $i_{tot}$ | $i_1$ | $\frac{z_2}{z_1} = i_2$ | [rpm] | [lb-in] | [hp] | [%] | [rpm] | [lb-in] | [hp] | [%] | 56C | 140TC | 180TC | 210TC | 250TC |
| SK 13063 | 65.20 | 11.86 | 33/6 | 27 | 1504 | 0.50 | 84 | 18 | 1504 | 0.33 | 84 | X* | | | | |
| | 79.54 | 14.46 | 33/6 | 22 | 1770 | 0.50 | 84 | 15 | 1752 | 0.33 | 83 | X* | | | | |
| | 97.03 | 7.87 | 37/3 | 18 | 2036 | 0.50 | 78 | 12 | 2009 | 0.33 | 77 | X* | | | | |
| | 114.04 | 9.25 | 37/3 | 15 | 2301 | 0.50 | 78 | 10 | 2328 | 0.33 | 77 | X* | | | | |
| | 128.53 | 10.42 | 37/3 | 14 | 2655 | 0.50 | 77 | 9.0 | 2620 | 0.33 | 76 | X* | | | | |
| | 146.17 | 11.86 | 37/3 | 12 | 2920 | 0.50 | 77 | 7.9 | 2947 | 0.33 | 76 | X* | | | | |
| | 178.31 | 14.46 | 37/3 | 9.80 | 3009 | 0.50 | 77 | 6.5 | 3133 | 0.33 | 76 | X* | | | | |
| | 198.86 | 9.25 | 43/2 | 8.80 | 3186 | 0.50 | 69 | 5.8 | 3336 | 0.33 | 67 | X* | | | | |
| | 224.12 | 10.42 | 43/2 | 7.80 | 3274 | 0.50 | 68 | 5.2 | 3407 | 0.33 | 67 | X* | | | | |
| | 254.89 | 11.86 | 43/2 | 6.90 | 3274 | 0.50 | 68 | 4.5 | 3398 | 0.33 | 66 | X* | | | | |
| | 310.92 | 14.46 | 43/2 | 5.60 | 3363 | 0.44 | 67 | 3.7 | 3505 | 0.31 | 66 | X* | | | | |
| | 349.37 | 16.25 | 43/2 | 5.00 | 3363 | 0.40 | 67 | 3.3 | 3513 | 0.28 | 66 | X* | | | | |
| | 395.51 | 18.40 | 43/2 | 4.40 | 3363 | 0.36 | 66 | 2.9 | 3505 | 0.25 | 65 | X* | | | | |
| | 471.70 | 9.25 | 51/1 | 3.70 | 3363 | 0.39 | 50 | 2.4 | 3522 | 0.28 | 48 | X* | | | | |
| | 531.64 | 10.42 | 51/1 | 3.30 | 3363 | 0.35 | 50 | 2.2 | 3496 | 0.25 | 48 | X* | | | | |
| | 604.62 | 11.86 | 51/1 | 2.90 | 3363 | 0.32 | 49 | 1.9 | 3487 | 0.21 | 48 | X* | | | | |
| | 737.53 | 14.46 | 51/1 | 2.40 | 3363 | 0.27 | 48 | 1.6 | 3505 | 0.19 | 47 | X* | | | | |
| | 938.20 | 18.40 | 51/1 | 1.90 | 3363 | 0.21 | 48 | 1.2 | 3505 | 0.15 | 47 | X* | | | | |
| | 1140.40✦ | 53.04 | 43/2 | 1.50 | 3363 | 0.12 | 65 | 1.0 | 3478 | 0.08 | 64 | X* | | | | |
| | 1343.63✦ | 62.49 | 43/2 | 1.30 | 3363 | 0.11 | 65 | 0.86 | 3452 | 0.07 | 64 | X* | | | | |
| | 2110.94✦ | 41.39 | 51/1 | 0.83 | 3363 | 0.09 | 46 | 0.55 | 3505 | 0.07 | 46 | X* | | | | |
| | 2374.16✦ | 46.55 | 51/1 | 0.74 | 3363 | 0.08 | 46 | 0.49 | 3487 | 0.05 | 45 | X* | | | | |
| | 2705.13✦ | 53.04 | 51/1 | 0.65 | 3363 | 0.08 | 46 | 0.43 | 3478 | 0.05 | 45 | X* | | | | |
| | 3631.55✦ | 71.21 | 51/1 | 0.48 | 3363 | 0.05 | 45 | 0.32 | 3443 | 0.04 | 45 | X* | | | | |

W + NEMA

* Caution - The motor power may exceed the gear unit's mechanical torque capacity. Limits Based on 1750rpm input speed.
✦ Non-footed units only.
◈ The mechanical power limit of the solid input shaft type "W" may limit the reducer rating.
All ratings are mechanical. See page 14 for thermal considerations.

| lb | W | 56C |
|---|---|---|
| SK 13063 | 64 | 75 |


Send Quote Requests to info@automatedpt.com
Call +1(800)985-6929 To Order or Order Online At Nordgearmotors.com





# SK 13063 NEMA-C + W Ratings & Combinations

| Model Type | Gear Ratio | | | $n_2$ = Output Speed<br>$T_{2\,max}$ = Output Torque*<br>$HP_{max}$ = Input power ◈<br>$\eta$ = Efficiencies | | | | | | | | | | | | NEMA C-Face* Available Combinations | | | | |
|---|---|---|---|---|---|---|---|---|---|---|---|---|---|---|---|---|---|---|---|---|
| | Total | Helical Gears | Worm Gears | $n_1$ = 875 rpm | | | | $n_1$ = 580 rpm | | | | $n_1$ = 300 rpm | | | | | | | | |
| | $i_{tot}$ | $i_1$ | $\frac{z_2}{z_1} = i_2$ | $n_2$ [rpm] | $T_{2\,max}$ [lb-in] | $HP_{max}$ [hp] | $\eta$ [%] | $n_2$ [rpm] | $T_{2\,max}$ [lb-in] | $HP_{max}$ [hp] | $\eta$ [%] | $n_2$ [rpm] | $T_{2\,max}$ [lb-in] | $HP_{max}$ [hp] | $\eta$ [%] | 56C | 140TC | 180TC | 210TC | 250TC |
| SK 13063 | 65.20 | 11.86 | 33/6 | 13 | 1487 | 0.25 | 83 | 8.9 | 1487 | 0.17 | 83 | 4.6 | 1469 | 0.09 | 82 | X* | | | | |
| | 79.54 | 14.46 | 33/6 | 11 | 1752 | 0.25 | 83 | 7.3 | 1752 | 0.17 | 83 | 3.8 | 1735 | 0.09 | 82 | X* | | | | |
| | 97.03 | 7.87 | 37/3 | 9.0 | 1982 | 0.25 | 76 | 6.0 | 1982 | 0.17 | 76 | 3.1 | 1956 | 0.09 | 75 | X* | | | | |
| | 114.04 | 9.25 | 37/3 | 7.7 | 2301 | 0.25 | 76 | 5.1 | 2274 | 0.17 | 75 | 2.6 | 2274 | 0.09 | 75 | X* | | | | |
| | 128.53 | 10.42 | 37/3 | 6.8 | 2620 | 0.25 | 76 | 4.5 | 2584 | 0.17 | 75 | 2.3 | 2584 | 0.09 | 75 | X* | | | | |
| | 146.17 | 11.86 | 37/3 | 6.0 | 2947 | 0.25 | 76 | 4.0 | 2912 | 0.17 | 75 | 2.1 | 2912 | 0.09 | 75 | X* | | | | |
| | 178.31 | 14.46 | 37/3 | 4.9 | 3213 | 0.25 | 75 | 3.3 | 3354 | 0.17 | 75 | 1.7 | 3505 | 0.09 | 74 | X* | | | | |
| | 198.86 | 9.25 | 43/2 | 4.4 | 3416 | 0.25 | 66 | 2.9 | 3434 | 0.17 | 65 | 1.5 | 3434 | 0.09 | 65 | X* | | | | |
| | 224.12 | 10.42 | 43/2 | 3.9 | 3505 | 0.25 | 66 | 2.6 | 3637 | 0.17 | 65 | 1.3 | 3867 | 0.09 | 65 | X* | | | | |
| | 254.89 | 11.86 | 43/2 | 3.4 | 3505 | 0.25 | 66 | 2.3 | 3620 | 0.17 | 65 | 1.2 | 3885 | 0.09 | 64 | X* | | | | |
| | 310.92 | 14.46 | 43/2 | 2.8 | 3593 | 0.24 | 65 | 1.9 | 3744 | 0.17 | 65 | 0.96 | 3965 | 0.09 | 64 | X* | | | | |
| | 349.37 | 16.25 | 43/2 | 2.5 | 3584 | 0.21 | 65 | 1.7 | 3761 | 0.16 | 65 | 0.86 | 3956 | 0.08 | 64 | X* | | | | |
| | 395.51 | 18.40 | 43/2 | 2.2 | 3584 | 0.19 | 65 | 1.5 | 3761 | 0.13 | 65 | 0.76 | 3929 | 0.08 | 64 | X* | | | | |
| | 471.70 | 9.25 | 51/1 | 1.9 | 3602 | 0.23 | 48 | 1.2 | 3752 | 0.15 | 47 | 0.64 | 4027 | 0.09 | 46 | X* | | | | |
| | 531.64 | 10.42 | 51/1 | 1.6 | 3602 | 0.20 | 47 | 1.1 | 3735 | 0.15 | 46 | 0.56 | 4000 | 0.08 | 46 | X* | | | | |
| | 604.62 | 11.86 | 51/1 | 1.4 | 3593 | 0.17 | 47 | 0.96 | 3717 | 0.12 | 46 | 0.50 | 3982 | 0.07 | 45 | X* | | | | |
| | 737.53 | 14.46 | 51/1 | 1.2 | 3593 | 0.15 | 47 | 0.79 | 3744 | 0.11 | 46 | 0.41 | 3965 | 0.05 | 45 | X* | | | | |
| | 938.20 | 18.40 | 51/1 | 0.93 | 3584 | 0.12 | 46 | 0.62 | 3761 | 0.08 | 46 | 0.32 | 3929 | 0.04 | 45 | X* | | | | |
| | 1140.40✦ | 53.04 | 43/2 | 0.77 | 3522 | 0.07 | 64 | 0.51 | 3584 | 0.04 | 64 | 0.26 | 3788 | 0.03 | 64 | X* | | | | |
| | 1343.63✦ | 62.49 | 43/2 | 0.65 | 3496 | 0.05 | 64 | 0.43 | 3602 | 0.04 | 64 | 0.22 | 4000 | 0.03 | 64 | X* | | | | |
| | 2110.94✦ | 41.39 | 51/1 | 0.41 | 3575 | 0.05 | 45 | 0.27 | 3646 | 0.04 | 45 | 0.14 | 3947 | 0.01 | 45 | X* | | | | |
| | 2374.16✦ | 46.55 | 51/1 | 0.37 | 3549 | 0.04 | 45 | 0.24 | 3611 | 0.03 | 45 | 0.13 | 3965 | 0.01 | 45 | X* | | | | |
| | 2705.13✦ | 53.04 | 51/1 | 0.32 | 3522 | 0.04 | 45 | 0.21 | 3584 | 0.03 | 45 | 0.11 | 3982 | 0.01 | 45 | X* | | | | |
| | 3631.55✦ | 71.21 | 51/1 | 0.24 | 3478 | 0.03 | 45 | 0.16 | 3664 | 0.03 | 45 | 0.08 | 4009 | 0.01 | 45 | X* | | | | |



* Caution - The motor power may exceed the gear unit's mechanical torque capacity. Limits Based on 1750rpm input speed.
✦ Non-footed units only.
◈ The mechanical power limit of the solid input shaft type "W" may limit the reducer rating.
All ratings are mechanical. See page 14 for thermal considerations.

| lb | W | 56C |
|---|---|---|
| SK 13063 | 64 | 75 |


Send Quote Requests to info@automatedpt.com
Call +1(800)985-6929 To Order or Order Online At Nordgearmotors.com

# SK 12080
# NEMA-C + W
# Ratings & Combinations

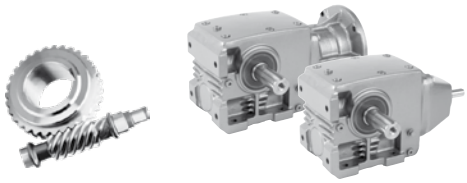

DRIVESYSTEMS

| Model Type | Gear Ratio | | | $n_2$ = Output Speed<br>$T_{2\,max}$ = Output Torque*<br>$HP_{max}$ = Input power ◈<br>η = Efficiencies | | | | | | | | NEMA C-Face* Available Combinations | | | | |
|---|---|---|---|---|---|---|---|---|---|---|---|---|---|---|---|---|
| | | | | $n_1$ =1750 rpm | | | | $n_1$ =1150 rpm | | | | | | | | |
| | $i_{tot}$ | $i_1$ | $\frac{z_2}{z_1} = i_2$ | $n_2$ [rpm] | $T_{2\,max}$ [lb-in] | $HP_{max}$ [hp] | η [%] | $n_2$ [rpm] | $T_{2\,max}$ [lb-in] | $HP_{max}$ [hp] | η [%] | 56C | 140TC | 180TC | 210TC | 250TC |
| SK 12080 | 7.55 | 1.46 | 31/6 | 232 | 2611 | 5.00 | 91 | 153 | 2974 | 3.30 | 90 | X | X | X | | |
| | 9.56 | 1.85 | 31/6 | 183 | 3009 | 5.00 | 91 | 121 | 3372 | 3.30 | 90 | X | X | X | | |
| | 10.75 | 2.08 | 31/6 | 163 | 3009 | 5.00 | 91 | 107 | 3336 | 3.30 | 89 | X | X | X | | |
| | 12.51 | 2.42 | 31/6 | 140 | 3053 | 5.00 | 90 | 92 | 3354 | 3.30 | 89 | X | X | X | | |
| | 14.01 | 2.71 | 31/6 | 125 | 3230 | 5.00 | 90 | 82 | 3522 | 3.30 | 89 | X | X | X | | |
| | 15.98 | 3.09 | 31/6 | 110 | 3496 | 5.00 | 90 | 72 | 3735 | 3.30 | 88 | X | X | X | | |
| | 19.11 | 1.85 | 31/3 | 92 | 4027 | 5.00 | 87 | 60 | 4514 | 3.30 | 86 | X | X | X | | |
| | 21.49 | 2.08 | 31/3 | 81 | 4160 | 5.00 | 87 | 54 | 4611 | 3.30 | 85 | X | X | X | | |
| | 25.00 | 2.42 | 31/3 | 70 | 4336 | 5.00 | 86 | 46 | 4761 | 3.30 | 84 | X | X | X | | |
| | 27.99 | 2.71 | 31/3 | 63 | 4514 | 5.00 | 86 | 41 | 4921 | 3.30 | 84 | X | X | X | | |
| | 31.92 | 3.09 | 31/3 | 55 | 4646 | 4.77 | 85 | 36 | 5027 | 3.46 | 83 | X | X | X* | | |
| | 37.91 | 3.67 | 31/3 | 46 | 4868 | 4.22 | 84 | 30 | 5213 | 3.03 | 82 | X | X | X* | | |
| | 44.72 | 2.08 | 43/2 | 39 | 4868 | 3.77 | 80 | 26 | 5398 | 2.90 | 77 | X | X | X* | | |
| | 52.03 | 2.42 | 43/2 | 34 | 5089 | 3.47 | 79 | 22 | 5584 | 2.56 | 76 | X | X | X* | | |
| | 58.27 | 2.71 | 43/2 | 30 | 5310 | 3.24 | 78 | 20 | 5788 | 2.45 | 75 | X | X | X* | | |
| | 66.44 | 3.09 | 43/2 | 26 | 5576 | 2.99 | 77 | 17 | 6027 | 2.17 | 75 | X | X | X* | | |
| | 78.91 | 3.67 | 43/2 | 22 | 5797 | 2.67 | 76 | 15 | 6213 | 2.02 | 73 | X | X | X* | | |
| | 94.35 | 1.85 | 51/1 | 19 | 4956 | 2.29 | 65 | 12 | 5549 | 1.70 | 62 | X | X | X* | | |
| | 106.08 | 2.08 | 51/1 | 16 | 5222 | 2.06 | 64 | 11 | 5788 | 1.69 | 60 | X | X | X* | | |
| | 123.42 | 2.42 | 51/1 | 14 | 5487 | 1.93 | 63 | 9.4 | 6018 | 1.51 | 59 | X | X* | X* | | |
| | 138.21 | 2.71 | 51/1 | 13 | 5708 | 1.90 | 62 | 8.4 | 6222 | 1.43 | 58 | X | X* | X* | | |
| | 157.59 | 3.09 | 51/1 | 11 | 5930 | 1.70 | 61 | 7.3 | 6416 | 1.30 | 57 | X | X* | X* | | |
| | 187.17 | 3.67 | 51/1 | 9.3 | 5930 | 1.49 | 59 | 6.2 | 6354 | 1.14 | 55 | X | X* | X* | | |
| | 234.60 | 4.60 | 51/1 | 7.5 | 6284 | 1.31 | 57 | 4.9 | 6629 | 0.95 | 54 | X | X* | | | |
| | **276.92✦** | 12.88 | 43/2 | 6.3 | 6284 | 0.91 | 69 | 4.2 | 6531 | 0.64 | 68 | X* | | | | |
| | **402.90✦** | 7.90 | 51/1 | 4.3 | 6284 | 0.80 | 53 | 2.9 | 6638 | 0.62 | 50 | X* | X* | | | |
| | **520.20✦** | 10.20 | 51/1 | 3.4 | 6284 | 0.67 | 51 | 2.2 | 6549 | 0.47 | 49 | X* | X* | | | |
| | **656.88✦** | 12.88 | 51/1 | 2.7 | 6284 | 0.54 | 50 | 1.8 | 6531 | 0.39 | 48 | X* | | | | |

W + NEMA

* Caution - The motor power may exceed the gear unit's mechanical torque capacity. Limits Based on 1750rpm input speed.
✦ Non-footed units only.
◈ The mechanical power limit of the solid input shaft type "W" may limit the reducer rating.
All ratings are mechanical. See page 14 for thermal considerations.

| lb | W | 56C | 140TC | 180TC |
|---|---|---|---|---|
| **SK 12080** | 75 | 86 | 86 | 101 |


Send Quote Requests to info@automatedpt.com
Call +1(800)985-6929 To Order or Order Online At Nordgearmotors.com





# SK 12080
# NEMA-C + W
# Ratings & Combinations

| Model Type | Gear Ratio | | | $n_2$ = Output Speed<br>$T_{2\,max}$ = Output Torque*<br>$HP_{max}$ = Input power ◈<br>$\eta$ = Efficiencies | | | | | | | | | | | | NEMA C-Face* Available Combinations | | | | |
|---|---|---|---|---|---|---|---|---|---|---|---|---|---|---|---|---|---|---|---|---|
| | | | | $n_1$ = 875 rpm | | | | $n_1$ = 580 rpm | | | | $n_1$ = 300 rpm | | | | | | | | |
| | $i_{tot}$ | $i_1$ | $\frac{z_2}{z_1} = i_2$ | $n_2$ [rpm] | $T_{2\,max}$ [lb-in] | $HP_{max}$ [hp] | $\eta$ [%] | $n_2$ [rpm] | $T_{2\,max}$ [lb-in] | $HP_{max}$ [hp] | $\eta$ [%] | $n_2$ [rpm] | $T_{2\,max}$ [lb-in] | $HP_{max}$ [hp] | $\eta$ [%] | 56C | 140TC | 180TC | 210TC | 250TC |
| **SK 12080** | 7.55 | 1.46 | 31/6 | 116 | 3195 | 2.50 | 90 | 77 | 3460 | 1.65 | 88 | 40 | 3452 | 0.90 | 86 | X | X | X | | |
| | 9.56 | 1.85 | 31/6 | 92 | 3567 | 2.50 | 89 | 61 | 3602 | 1.65 | 88 | 31 | 3522 | 0.90 | 86 | X | X | X | | |
| | 10.75 | 2.08 | 31/6 | 81 | 3522 | 2.50 | 89 | 54 | 3593 | 1.65 | 87 | 28 | 3513 | 0.90 | 85 | X | X | X | | |
| | 12.51 | 2.42 | 31/6 | 70 | 3522 | 2.50 | 88 | 46 | 3637 | 1.65 | 87 | 24 | 3549 | 0.90 | 85 | X | X | X | | |
| | 14.01 | 2.71 | 31/6 | 62 | 3673 | 2.50 | 88 | 41 | 3620 | 1.65 | 86 | 21 | 3575 | 0.90 | 85 | X | X | X | | |
| | 15.98 | 3.09 | 31/6 | 55 | 3690 | 2.50 | 87 | 36 | 3655 | 1.65 | 86 | 19 | 3567 | 0.90 | 84 | X | X | X | | |
| | 19.11 | 1.85 | 31/3 | 46 | 4779 | 2.50 | 84 | 30 | 5115 | 1.65 | 82 | 16 | 5593 | 0.90 | 80 | X | X | X | | |
| | 21.49 | 2.08 | 31/3 | 41 | 4868 | 2.50 | 84 | 27 | 5168 | 1.65 | 82 | 14 | 5646 | 0.90 | 79 | X | X | X | | |
| | 25.00 | 2.42 | 31/3 | 35 | 5000 | 2.50 | 83 | 23 | 5275 | 1.65 | 81 | 12 | 5735 | 0.90 | 79 | X | X | X | | |
| | 27.99 | 2.71 | 31/3 | 31 | 5133 | 2.50 | 83 | 21 | 5434 | 1.65 | 81 | 11 | 5850 | 0.90 | 79 | X | X | X | | |
| | 31.92 | 3.09 | 31/3 | 27 | 5213 | 2.72 | 82 | 18 | 5540 | 1.97 | 80 | 9.4 | 5912 | 1.13 | 78 | X | X | X* | | |
| | 37.91 | 3.67 | 31/3 | 23 | 5398 | 2.43 | 81 | 15 | 5726 | 1.70 | 80 | 7.9 | 6106 | 0.98 | 78 | X | X | X* | | |
| | 44.72 | 2.08 | 43/2 | 20 | 5699 | 2.41 | 75 | 13 | 6045 | 1.70 | 73 | 6.7 | 6611 | 1.02 | 69 | X | X | X* | | |
| | 52.03 | 2.42 | 43/2 | 17 | 5868 | 2.13 | 74 | 11 | 6186 | 1.50 | 72 | 5.8 | 6726 | 0.90 | 69 | X | X | X* | | |
| | 58.27 | 2.71 | 43/2 | 15 | 6045 | 1.94 | 74 | 10 | 6390 | 1.42 | 71 | 5.1 | 6876 | 0.82 | 68 | X | X | X* | | |
| | 66.44 | 3.09 | 43/2 | 13 | 6257 | 1.77 | 73 | 8.7 | 6646 | 1.29 | 71 | 4.5 | 7089 | 0.75 | 68 | X | X | X* | | |
| | 78.91 | 3.67 | 43/2 | 11 | 6434 | 1.55 | 72 | 7.4 | 6814 | 1.14 | 70 | 3.8 | 7266 | 0.66 | 67 | X | X | X* | | |
| | 94.35 | 1.85 | 51/1 | 9.3 | 5876 | 1.47 | 59 | 6.1 | 6292 | 1.11 | 55 | 3.2 | 6885 | 0.68 | 51 | X | X | X* | | |
| | 106.08 | 2.08 | 51/1 | 8.2 | 6115 | 1.37 | 58 | 5.5 | 6487 | 1.05 | 54 | 2.8 | 7089 | 0.63 | 50 | X | X | X* | | |
| | 123.42 | 2.42 | 51/1 | 7.1 | 6328 | 1.27 | 56 | 4.7 | 6673 | 0.94 | 53 | 2.4 | 7257 | 0.56 | 49 | X | X* | X* | | |
| | 138.21 | 2.71 | 51/1 | 6.3 | 6496 | 1.15 | 56 | 4.2 | 6868 | 0.88 | 52 | 2.2 | 7390 | 0.52 | 49 | X | X* | X* | | |
| | 157.59 | 3.09 | 51/1 | 5.6 | 6655 | 1.10 | 54 | 3.7 | 7062 | 0.79 | 52 | 1.9 | 7540 | 0.47 | 48 | X | X* | X* | | |
| | 187.17 | 3.67 | 51/1 | 4.7 | 6576 | 0.92 | 53 | 3.1 | 6974 | 0.67 | 51 | 1.6 | 7434 | 0.39 | 48 | X | X* | X* | | |
| | 234.60 | 4.60 | 51/1 | 3.7 | 6930 | 0.78 | 52 | 2.5 | 7248 | 0.59 | 49 | 1.3 | 7717 | 0.34 | 47 | X | X* | | | |
| | **276.92✦** | 12.88 | 43/2 | 3.2 | 6567 | 0.50 | 67 | 2.1 | 6469 | 0.32 | 66 | 1.1 | 6372 | 0.17 | 65 | X* | | | | |
| | **402.90✦** | 7.90 | 51/1 | 2.2 | 6797 | 0.48 | 49 | 1.4 | 7089 | 0.34 | 47 | 0.74 | 7567 | 0.19 | 46 | X* | X* | | | |
| | **520.20✦** | 10.20 | 51/1 | 1.7 | 6726 | 0.38 | 48 | 1.1 | 6983 | 0.25 | 47 | 0.58 | 7487 | 0.15 | 46 | X* | X* | | | |
| | **656.88✦** | 12.88 | 51/1 | 1.3 | 6708 | 0.29 | 47 | 0.88 | 6974 | 0.21 | 46 | 0.46 | 7434 | 0.12 | 45 | X* | | | | |

W + NEMA

* Caution - The motor power may exceed the gear unit's mechanical torque capacity. Limits Based on 1750rpm input speed.
✦ Non-footed units only.
◈ The mechanical power limit of the solid input shaft type "W" may limit the reducer rating.
All ratings are mechanical. See page 14 for thermal considerations.

| lb | W | 56C | 140TC | 180TC |
|---|---|---|---|---|
| **SK 12080** | 75 | 86 | 86 | 101 |


Send Quote Requests to info@automatedpt.com
Call +1(800)985-6929 To Order or Order Online At Nordgearmotors.com

# SK 13080
# NEMA-C + W
# Ratings & Combinations

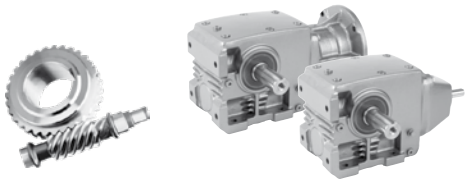

DRIVESYSTEMS

| Model Type | Gear Ratio | | | $n_2$ = Output Speed<br>$T_{2\,max}$ = Output Torque*<br>$HP_{max}$ = Input power ◈<br>$\eta$ = Efficiencies | | | | | | | | NEMA C-Face* Available Combinations | | | | |
|---|---|---|---|---|---|---|---|---|---|---|---|---|---|---|---|---|
| | | | | $n_1$ =1750 rpm | | | | $n_1$ =1150 rpm | | | | | | | | |
| | Total | Helical Gears | Worm Gears | | | | | | | | | | | | | |
| | $i_{tot}$ | $i_1$ | $\frac{z_2}{z_1} = i_2$ | $n_2$ [rpm] | $T_{2\,max}$ [lb-in] | $HP_{max}$ [hp] | $\eta$ [%] | $n_2$ [rpm] | $T_{2\,max}$ [lb-in] | $HP_{max}$ [hp] | $\eta$ [%] | 56C | 140TC | 180TC | 210TC | 250TC |
| SK 13080 | **97.65** | 9.45 | 31/3 | 18 | 2036 | 0.50 | 80 | 12 | 2044 | 0.33 | 79 | X* | | | | |
| | **109.80** | 10.63 | 31/3 | 16 | 2301 | 0.50 | 80 | 11 | 2301 | 0.33 | 79 | X* | | | | |
| | **127.74** | 12.37 | 31/3 | 14 | 2655 | 0.50 | 79 | 9.0 | 2646 | 0.33 | 78 | X* | | | | |
| | **143.05** | 13.85 | 31/3 | 12 | 3009 | 0.50 | 79 | 8.1 | 3009 | 0.33 | 78 | X* | | | | |
| | **163.11** | 15.79 | 31/3 | 11 | 3363 | 0.50 | 79 | 7.1 | 3381 | 0.33 | 78 | X* | | | | |
| | **193.73** | 18.75 | 31/3 | 9.00 | 3982 | 0.50 | 78 | 6.0 | 3965 | 0.33 | 77 | X* | | | | |
| | **228.52** | 10.63 | 43/2 | 7.70 | 5044 | 0.50 | 70 | 5.1 | 4974 | 0.33 | 68 | X* | | | | |
| | **265.87** | 12.37 | 43/2 | 6.60 | 5044 | 0.50 | 69 | 4.3 | 5044 | 0.33 | 68 | X* | | | | |
| | **297.73** | 13.85 | 43/2 | 5.90 | 5398 | 0.50 | 69 | 3.9 | 5319 | 0.33 | 67 | X* | | | | |
| | **339.48** | 15.79 | 43/2 | 5.20 | 6195 | 0.50 | 68 | 3.4 | 6098 | 0.33 | 67 | X* | | | | |
| | **403.20** | 18.75 | 43/2 | 4.30 | 6814 | 0.50 | 68 | 2.9 | 7098 | 0.33 | 67 | X* | | | | |
| | **482.13** | 9.45 | 51/1 | 3.60 | 6814 | 0.50 | 52 | 2.4 | 6682 | 0.33 | 49 | X* | | | | |
| | **542.07** | 10.63 | 51/1 | 3.20 | 6814 | 0.50 | 51 | 2.1 | 7053 | 0.33 | 49 | X* | | | | |
| | **630.68** | 12.37 | 51/1 | 2.80 | 6814 | 0.50 | 50 | 1.8 | 7071 | 0.33 | 48 | X* | | | | |
| | **706.25** | 13.85 | 51/1 | 2.50 | 6814 | 0.50 | 49 | 1.6 | 7089 | 0.33 | 48 | X* | | | | |
| | **805.28** | 15.79 | 51/1 | 2.20 | 6814 | 0.48 | 49 | 1.4 | 7107 | 0.34 | 47 | X* | | | | |
| | **956.44** | 18.75 | 51/1 | 1.80 | 6814 | 0.40 | 48 | 1.2 | 7098 | 0.28 | 47 | X* | | | | |
| | **1198.81** | 23.51 | 51/1 | 1.50 | 6814 | 0.35 | 47 | 0.96 | 7045 | 0.23 | 46 | X* | | | | |
| | **2058.82✦** | 40.37 | 51/1 | 0.85 | 6814 | 0.20 | 46 | 0.56 | 7115 | 0.13 | 46 | X* | | | | |
| | **2658.22✦** | 52.12 | 51/1 | 0.66 | 6814 | 0.16 | 46 | 0.43 | 7045 | 0.11 | 45 | X* | | | | |
| | **3356.66✦** | 65.82 | 51/1 | 0.52 | 6814 | 0.12 | 45 | 0.34 | 6992 | 0.08 | 45 | X* | | | | |

W + NEMA

* Caution - The motor power may exceed the gear unit's mechanical torque capacity. Limits Based on 1750rpm input speed.
✦ Non-footed units only.
◈ The mechanical power limit of the solid input shaft type "W" may limit the reducer rating.
All ratings are mechanical. See page 14 for thermal considerations.

| lb | W | 56C |
|---|---|---|
| **SK 13080** | 86 | 97 |


Send Quote Requests to info@automatedpt.com
Call +1(800)985-6929 To Order or Order Online At Nordgearmotors.com





# SK 13080 NEMA-C + W Ratings & Combinations

| Model Type | Gear Ratio | | | $n_2$ = Output Speed<br>$T_{2\,max}$ = Output Torque*<br>$HP_{max}$ = Input power ◈<br>$\eta$ = Efficiencies | | | | | | | | | | | | NEMA C-Face* Available Combinations | | | | |
|---|---|---|---|---|---|---|---|---|---|---|---|---|---|---|---|---|---|---|---|---|
| | | | | $n_1$ = 875 rpm | | | | $n_1$ = 580 rpm | | | | $n_1$ = 300 rpm | | | | | | | | |
| | $i_{tot}$ | $i_1$ | $\frac{z_2}{z_1} = i_2$ | $n_2$ | $T_{2\,max}$ | $HP_{max}$ | $\eta$ | $n_2$ | $T_{2\,max}$ | $HP_{max}$ | $\eta$ | $n_2$ | $T_{2\,max}$ | $HP_{max}$ | $\eta$ | | | | | |
| | | | | [rpm] | [lb-in] | [hp] | [%] | [rpm] | [lb-in] | [hp] | [%] | [rpm] | [lb-in] | [hp] | [%] | 56C | 140TC | 180TC | 210TC | 250TC |
| SK 13080 | **97.65** | 9.45 | 31/3 | 9.0 | 2027 | 0.25 | 78 | 5.90 | 2000 | 0.17 | 77 | 3.1 | 1974 | 0.09 | 76 | X* | | | | |
| | **109.80** | 10.63 | 31/3 | 8.0 | 2274 | 0.25 | 78 | 5.30 | 2248 | 0.17 | 77 | 2.7 | 2212 | 0.09 | 76 | X* | | | | |
| | **127.74** | 12.37 | 31/3 | 6.8 | 2611 | 0.25 | 77 | 4.50 | 2611 | 0.17 | 77 | 2.3 | 2575 | 0.09 | 76 | X* | | | | |
| | **143.05** | 13.85 | 31/3 | 6.1 | 2965 | 0.25 | 77 | 4.10 | 2965 | 0.17 | 77 | 2.1 | 2929 | 0.09 | 76 | X* | | | | |
| | **163.11** | 15.79 | 31/3 | 5.4 | 3336 | 0.25 | 77 | 3.60 | 3292 | 0.17 | 76 | 1.8 | 3292 | 0.09 | 76 | X* | | | | |
| | **193.73** | 18.75 | 31/3 | 4.5 | 3965 | 0.25 | 77 | 3.00 | 3912 | 0.17 | 76 | 1.5 | 3912 | 0.09 | 76 | X* | | | | |
| | **228.52** | 10.63 | 43/2 | 3.8 | 4903 | 0.25 | 67 | 2.50 | 4823 | 0.17 | 66 | 1.3 | 4752 | 0.09 | 65 | X* | | | | |
| | **265.87** | 12.37 | 43/2 | 3.3 | 4974 | 0.25 | 67 | 2.20 | 4903 | 0.17 | 66 | 1.1 | 4823 | 0.09 | 65 | X* | | | | |
| | **297.73** | 13.85 | 43/2 | 2.9 | 5319 | 0.25 | 67 | 1.90 | 5239 | 0.17 | 66 | 1.0 | 5160 | 0.09 | 65 | X* | | | | |
| | **339.48** | 15.79 | 43/2 | 2.6 | 6009 | 0.25 | 66 | 1.70 | 6009 | 0.17 | 66 | 0.88 | 5921 | 0.09 | 65 | X* | | | | |
| | **403.20** | 18.75 | 43/2 | 2.2 | 7062 | 0.25 | 66 | 1.40 | 6956 | 0.17 | 65 | 0.74 | 6956 | 0.09 | 65 | X* | | | | |
| | **482.13** | 9.45 | 51/1 | 1.8 | 6540 | 0.25 | 48 | 1.20 | 6407 | 0.17 | 47 | 0.62 | 6275 | 0.09 | 46 | X* | | | | |
| | **542.07** | 10.63 | 51/1 | 1.6 | 6912 | 0.25 | 48 | 1.10 | 6761 | 0.17 | 47 | 0.55 | 6478 | 0.09 | 45 | X* | | | | |
| | **630.68** | 12.37 | 51/1 | 1.4 | 7284 | 0.25 | 47 | 0.92 | 7549 | 0.17 | 46 | 0.48 | 7531 | 0.09 | 45 | X* | | | | |
| | **706.25** | 13.85 | 51/1 | 1.2 | 7275 | 0.25 | 47 | 0.82 | 7584 | 0.17 | 46 | 0.42 | 8045 | 0.09 | 45 | X* | | | | |
| | **805.28** | 15.79 | 51/1 | 1.1 | 7266 | 0.27 | 47 | 0.72 | 7620 | 0.19 | 46 | 0.37 | 8018 | 0.11 | 45 | X* | | | | |
| | **956.44** | 18.75 | 51/1 | 0.91 | 7275 | 0.23 | 46 | 0.61 | 7620 | 0.16 | 46 | 0.31 | 7956 | 0.08 | 45 | X* | | | | |
| | **1198.81** | 23.51 | 51/1 | 0.73 | 7301 | 0.19 | 46 | 0.48 | 7576 | 0.13 | 45 | 0.25 | 7832 | 0.07 | 45 | X* | | | | |
| | **2058.82✦** | 40.37 | 51/1 | 0.43 | 7266 | 0.11 | 45 | 0.28 | 7416 | 0.07 | 45 | 0.15 | 7983 | 0.04 | 45 | X* | | | | |
| | **2658.22✦** | 52.12 | 51/1 | 0.33 | 7151 | 0.08 | 45 | 0.22 | 7266 | 0.05 | 45 | 0.11 | 8062 | 0.03 | 44 | X* | | | | |
| | **3356.66✦** | 65.82 | 51/1 | 0.26 | 7071 | 0.07 | 45 | 0.17 | 7354 | 0.04 | 45 | 0.09 | 8115 | 0.03 | 44 | X* | | | | |

W + NEMA

* Caution - The motor power may exceed the gear unit's mechanical torque capacity. Limits Based on 1750rpm input speed.
✦ Non-footed units only.
◈ The mechanical power limit of the solid input shaft type "W" may limit the reducer rating.
All ratings are mechanical. See page 14 for thermal considerations.

| lb | W | 56C |
|---|---|---|
| SK 13080 | 86 | 97 |


Send Quote Requests to info@automatedpt.com
Call +1(800)985-6929 To Order or Order Online At Nordgearmotors.com

# SK 32100
# NEMA-C + W
# Ratings & Combinations

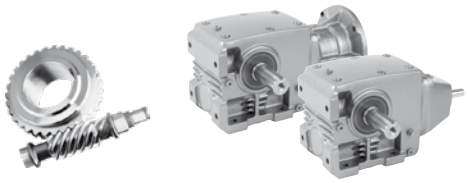

DRIVESYSTEMS

| Model Type | Gear Ratio | | | $n_2$ = Output Speed<br>$T_{2\,max}$ = Output Torque*<br>$HP_{max}$ = Input power ◈<br>η = Efficiencies | | | | | | | | NEMA C-Face* Available Combinations | | | | |
|---|---|---|---|---|---|---|---|---|---|---|---|---|---|---|---|---|
| | | | | $n_1$ =1750 rpm | | | | $n_1$ =1150 rpm | | | | | | | | |
| | $i_{tot}$ | $i_1$ | $\frac{z_2}{z_1} = i_2$ | $n_2$ [rpm] | $T_{2\,max}$ [lb-in] | $HP_{max}$ [hp] | η [%] | $n_2$ [rpm] | $T_{2\,max}$ [lb-in] | $HP_{max}$ [hp] | η [%] | 56C | 140TC | 180TC | 210TC | 250TC |
| SK 32100 | 7.19 | 1.39 | 31/6 | 243 | 6018 | 10.00 | 93 | 161 | 6080 | 6.60 | 92 | X | X | X | X | |
| | 9.10 | 1.76 | 31/6 | 192 | 6416 | 10.00 | 92 | 127 | 6345 | 6.60 | 91 | X | X | X | X | |
| | 10.75 | 2.08 | 31/6 | 163 | 6416 | 10.00 | 92 | 107 | 6416 | 6.60 | 91 | X | X | X | X | |
| | 13.34 | 2.58 | 31/6 | 131 | 6284 | 10.00 | 91 | 87 | 6372 | 6.60 | 90 | X | X | X | X | |
| | 16.22 | 1.39 | 35/3 | 108 | 6638 | 10.00 | 90 | 71 | 7602 | 6.60 | 88 | X | X | X | X | |
| | 17.11 | 3.31 | 31/6 | 102 | 6284 | 10.00 | 91 | 68 | 6416 | 6.60 | 89 | X | X | X | X | |
| | 18.97 | 3.67 | 31/6 | 92 | 6372 | 10.00 | 90 | 61 | 6452 | 6.60 | 89 | X | X | X | X | |
| | 20.54 | 1.76 | 35/3 | 85 | 7434 | 10.00 | 89 | 56 | 8372 | 6.60 | 87 | X | X | X | X | |
| | 24.27 | 2.08 | 35/3 | 72 | 9027 | 10.00 | 88 | 48 | 10009 | 6.60 | 86 | X | X | X | X | |
| | 30.11 | 2.58 | 35/3 | 58 | 9292 | 9.83 | 87 | 38 | 10151 | 7.20 | 85 | X | X | X | X* | |
| | 34.32 | 1.76 | 39/2 | 51 | 9646 | 9.29 | 84 | 34 | 10859 | 7.14 | 82 | X | X | X | X* | |
| | 38.63 | 3.31 | 35/3 | 45 | 9735 | 8.08 | 86 | 30 | 10496 | 5.95 | 84 | X | X | X | X* | |
| | 42.83 | 3.67 | 35/3 | 41 | 9735 | 7.36 | 86 | 27 | 10425 | 5.31 | 84 | X | X | X | X* | |
| | 50.31 | 2.58 | 39/2 | 35 | 9824 | 6.65 | 82 | 23 | 10735 | 4.96 | 79 | X | X | X | X* | |
| | 64.55 | 3.31 | 39/2 | 27 | 10532 | 5.64 | 80 | 18 | 11355 | 4.21 | 77 | X | X | X | X* | |
| | 71.57 | 3.67 | 39/2 | 24 | 10797 | 5.13 | 80 | 16 | 11567 | 3.81 | 77 | X | X | X | X* | |
| | 94.19 | 4.83 | 39/2 | 19 | 11594 | 4.48 | 78 | 12 | 12240 | 3.11 | 75 | X | X | X* | | |
| | 104.00 | 2.08 | 50/1 | 17 | 10354 | 4.05 | 69 | 11 | 11478 | 3.08 | 65 | X | X | X* | X* | |
| | 129.00 | 2.58 | 50/1 | 14 | 10974 | 3.63 | 67 | 9.0 | 11992 | 2.72 | 63 | X | X | X* | X* | |
| | 165.50 | 3.31 | 50/1 | 11 | 11770 | 3.20 | 64 | 7.0 | 12691 | 2.35 | 60 | X | X | X* | X* | |
| | 183.50 | 3.67 | 50/1 | 9.5 | 12080 | 2.90 | 63 | 6.3 | 12939 | 2.18 | 59 | X | X | X* | X* | |
| | 241.50 | 4.83 | 50/1 | 7.2 | 12567 | 2.39 | 60 | 4.8 | 13266 | 1.77 | 57 | X | X | X* | | |
| | **304.00** | 6.08 | 50/1 | 5.8 | 12567 | 2.00 | 58 | 3.8 | 13337 | 1.46 | 55 | X | X | | | |
| | **410.00** | 8.20 | 50/1 | 4.3 | 11992 | 1.46 | 56 | 2.8 | 12629 | 1.07 | 52 | X | X* | X* | | |
| | **510.00** | 10.20 | 50/1 | 3.4 | 12567 | 1.26 | 54 | 2.3 | 13089 | 0.94 | 51 | X | X* | | | |
| | **645.00** | 12.90 | 50/1 | 2.7 | 12567 | 1.03 | 52 | 1.8 | 13054 | 0.75 | 50 | X | X* | | | |

W + NEMA

* Caution - The motor power may exceed the gear unit's mechanical torque capacity. Limits Based on 1750rpm input speed.
◈ The mechanical power limit of the solid input shaft type "W" may limit the reducer rating.
All ratings are mechanical. See page 14 for thermal considerations.

| lb | W | 56C | 140TC | 180TC | 210TC |
|---|---|---|---|---|---|
| **SK 32100** | 146 | 150 | 150 | 159 | 179 |


Send Quote Requests to info@automatedpt.com
Call +1(800)985-6929 To Order or Order Online At Nordgearmotors.com





# SK 32100 NEMA-C + W Ratings & Combinations

| Model Type | Gear Ratio | | | $n_2$ = Output Speed<br>$T_{2\,max}$ = Output Torque*<br>$HP_{max}$ = Input power ◈<br>η = Efficiencies | | | | | | | | | | | | NEMA C-Face* Available Combinations | | | | |
|---|---|---|---|---|---|---|---|---|---|---|---|---|---|---|---|---|---|---|---|---|
| | | | | $n_1$ = 875 rpm | | | | $n_1$ = 580 rpm | | | | $n_1$ = 300 rpm | | | | | | | | |
| | $i_{tot}$ | $i_1$ | $\frac{z_2}{z_1} = i_2$ | $n_2$ [rpm] | $T_{2\,max}$ [lb-in] | $HP_{max}$ [hp] | η [%] | $n_2$ [rpm] | $T_{2\,max}$ [lb-in] | $HP_{max}$ [hp] | η [%] | $n_2$ [rpm] | $T_{2\,max}$ [lb-in] | $HP_{max}$ [hp] | η [%] | 56C | 140TC | 180TC | 210TC | 250TC |
| **SK 32100** | 7.19 | 1.39 | 31/6 | 122 | 6018 | 5.00 | 91 | 81 | 5947 | 3.30 | 90 | 42 | 5814 | 1.80 | 88 | X | X | X | X | |
| | 9.10 | 1.76 | 31/6 | 96 | 6345 | 5.00 | 91 | 64 | 6204 | 3.30 | 89 | 33 | 6071 | 1.80 | 87 | X | X | X | X | |
| | 10.75 | 2.08 | 31/6 | 81 | 6345 | 5.00 | 90 | 54 | 6275 | 3.30 | 89 | 28 | 6062 | 1.80 | 86 | X | X | X | X | |
| | 13.34 | 2.58 | 31/6 | 66 | 6301 | 5.00 | 89 | 43 | 6230 | 3.30 | 88 | 22 | 6089 | 1.80 | 86 | X | X | X | X | |
| | 16.22 | 1.39 | 35/3 | 54 | 8177 | 5.00 | 87 | 36 | 8885 | 3.30 | 85 | 18 | 9762 | 1.80 | 82 | X | X | X | X | |
| | 17.11 | 3.31 | 31/6 | 51 | 6345 | 5.00 | 88 | 34 | 6266 | 3.30 | 87 | 18 | 6124 | 1.80 | 85 | X | X | X | X | |
| | 18.97 | 3.67 | 31/6 | 46 | 6381 | 5.00 | 88 | 31 | 6301 | 3.30 | 87 | 16 | 6160 | 1.80 | 85 | X | X | X | X | |
| | 20.54 | 1.76 | 35/3 | 43 | 8877 | 5.00 | 86 | 28 | 9531 | 3.30 | 84 | 15 | 10443 | 1.80 | 81 | X | X | X | X | |
| | 24.27 | 2.08 | 35/3 | 36 | 10567 | 5.00 | 85 | 24 | 11213 | 3.30 | 83 | 12 | 12248 | 1.80 | 80 | X | X | X | X | |
| | 30.11 | 2.58 | 35/3 | 29 | 10629 | 5.82 | 84 | 19 | 11231 | 4.13 | 82 | 10 | 12133 | 2.44 | 79 | X | X | X | X* | |
| | 34.32 | 1.76 | 39/2 | 25 | 11514 | 5.71 | 80 | 17 | 12372 | 4.33 | 77 | 8.7 | 13549 | 2.56 | 73 | X | X | X | X* | |
| | 38.63 | 3.31 | 35/3 | 23 | 10868 | 4.77 | 83 | 15 | 11549 | 3.39 | 81 | 7.8 | 12319 | 1.96 | 78 | X | X | X | X* | |
| | 42.83 | 3.67 | 35/3 | 20 | 10797 | 4.18 | 82 | 14 | 11452 | 3.18 | 80 | 7.0 | 12204 | 1.74 | 78 | X | X | X | X* | |
| | 50.31 | 2.58 | 39/2 | 17 | 11240 | 3.94 | 77 | 12 | 11877 | 3.06 | 74 | 6.0 | 12832 | 1.72 | 71 | X | X | X | X* | |
| | 64.55 | 3.31 | 39/2 | 14 | 11753 | 3.43 | 76 | 9.0 | 12487 | 2.44 | 73 | 4.6 | 13328 | 1.39 | 70 | X | X | X | X* | |
| | 71.57 | 3.67 | 39/2 | 12 | 11974 | 3.04 | 75 | 8.1 | 12700 | 2.27 | 72 | 4.2 | 13540 | 1.31 | 69 | X | X | X | X* | |
| | 94.19 | 4.83 | 39/2 | 9.3 | 12771 | 2.57 | 73 | 6.2 | 13328 | 1.85 | 71 | 3.2 | 14187 | 1.06 | 68 | X | X | X* | | |
| | 104.00 | 2.08 | 50/1 | 8.4 | 12124 | 2.60 | 62 | 5.6 | 12868 | 1.97 | 58 | 2.9 | 14054 | 1.22 | 53 | X | X | X* | X* | |
| | 129.00 | 2.58 | 50/1 | 6.8 | 12558 | 2.25 | 60 | 4.5 | 13266 | 1.69 | 56 | 2.3 | 14337 | 1.03 | 51 | X | X | X* | X* | |
| | 165.50 | 3.31 | 50/1 | 5.3 | 13133 | 1.93 | 57 | 3.5 | 13956 | 1.43 | 54 | 1.8 | 14895 | 0.84 | 50 | X | X | X* | X* | |
| | 183.50 | 3.67 | 50/1 | 4.8 | 13399 | 1.82 | 56 | 3.2 | 14213 | 1.37 | 53 | 1.6 | 15151 | 0.79 | 49 | X | X | X* | X* | |
| | 241.50 | 4.83 | 50/1 | 3.6 | 13841 | 1.46 | 54 | 2.4 | 14452 | 1.07 | 51 | 1.2 | 15381 | 0.60 | 48 | X | X | X* | | |
| | **304.00** | 6.08 | 50/1 | 2.9 | 13779 | 1.19 | 53 | 1.9 | 14293 | 0.86 | 50 | 0.99 | 15169 | 0.50 | 48 | X | X | | | |
| | **410.00** | 8.20 | 50/1 | 2.1 | 12930 | 0.84 | 51 | 1.4 | 13496 | 0.62 | 49 | 0.73 | 14426 | 0.36 | 47 | X | X* | X* | | |
| | **510.00** | 10.20 | 50/1 | 1.7 | 13452 | 0.72 | 50 | 1.1 | 13956 | 0.51 | 48 | 0.59 | 14974 | 0.29 | 47 | X | X* | | | |
| | **645.00** | 12.90 | 50/1 | 1.4 | 13425 | 0.60 | 49 | 0.9 | 13939 | 0.43 | 47 | 0.47 | 14859 | 0.24 | 46 | X | X* | | | |



* Caution - The motor power may exceed the gear unit's mechanical torque capacity. Limits Based on 1750rpm input speed.
◈ The mechanical power limit of the solid input shaft type "W" may limit the reducer rating.
All ratings are mechanical. See page 14 for thermal considerations.

| lb | W | 56C | 140TC | 180TC | 210TC |
|---|---|---|---|---|---|
| **SK 32100** | 146 | 150 | 150 | 159 | 179 |


Send Quote Requests to info@automatedpt.com
Call +1(800)985-6929 To Order or Order Online At Nordgearmotors.com

# SK 33100
# NEMA-C + W
# Ratings & Combinations

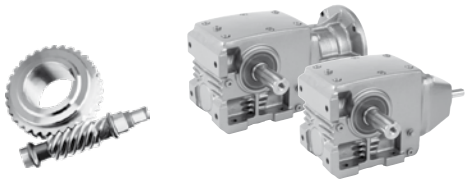

DRIVESYSTEMS

| Model Type | Gear Ratio | | | $n_2$ = Output Speed<br>$T_{2\,max}$ = Output Torque*<br>$HP_{max}$ = Input power ◈<br>$\eta$ = Efficiencies | | | | | | | | NEMA C-Face* Available Combinations | | | | |
|---|---|---|---|---|---|---|---|---|---|---|---|---|---|---|---|---|
| | | | | $n_1$ =1750 rpm | | | | $n_1$ =1150 rpm | | | | | | | | |
| | Total | Helical Gears | Worm Gears | | | | | | | | | | | | | |
| | $i_{tot}$ | $i_1$ | $\frac{z_2}{z_1} = i_2$ | $n_2$ [rpm] | $T_{2\,max}$ [lb-in] | $HP_{max}$ [hp] | $\eta$ [%] | $n_2$ [rpm] | $T_{2\,max}$ [lb-in] | $HP_{max}$ [hp] | $\eta$ [%] | 56C | 140TC | 180TC | 210TC | 250TC |
| SK 33100 | 53.70 | 10.39 | 31/6 | 33 | 6106 | 2.00 | 87 | 22 | 6230 | 1.32 | 86 | X | X | | | |
| | 69.85 | 5.99 | 35/3 | 25 | 9558 | 2.00 | 83 | 17 | 10142 | 1.32 | 81 | X | X | | | |
| | 85.21 | 7.30 | 35/3 | 21 | 9558 | 2.00 | 82 | 14 | 10142 | 1.32 | 80 | X | X | | | |
| | 109.32 | 9.37 | 35/3 | 16 | 10532 | 2.00 | 81 | 11 | 11018 | 1.32 | 79 | X | X | | | |
| | 121.21 | 10.39 | 35/3 | 14 | 10532 | 2.00 | 81 | 9.50 | 10965 | 1.32 | 79 | X | X | | | |
| | 142.38 | 7.30 | 39/2 | 12 | 11594 | 2.00 | 75 | 8.10 | 12302 | 1.32 | 72 | X | X | | | |
| | 182.66 | 9.37 | 39/2 | 9.6 | 12567 | 2.00 | 73 | 6.30 | 13142 | 1.32 | 71 | X | X | | | |
| | 257.63 | 13.21 | 39/2 | 6.8 | 13364 | 2.00 | 71 | 4.50 | 13894 | 1.32 | 70 | X | X | | | |
| | 299.28 | 5.99 | 50/1 | 5.8 | 13364 | 2.00 | 58 | 3.90 | 14178 | 1.32 | 55 | X | X | | | |
| | 365.07 | 7.30 | 50/1 | 4.8 | 13364 | 1.78 | 57 | 3.20 | 14178 | 1.35 | 53 | X | X* | | | |
| | 468.37 | 9.37 | 50/1 | 3.7 | 14072 | 1.53 | 54 | 2.50 | 14718 | 1.13 | 52 | X | X* | | | |
| | 519.31 | 10.39 | 50/1 | 3.4 | 14072 | 1.41 | 54 | 2.20 | 14647 | 1.01 | 51 | X | X* | | | |
| | 660.60 | 13.21 | 50/1 | 2.6 | 14072 | 1.11 | 52 | 1.70 | 14629 | 0.79 | 50 | X | X* | | | |
| | **1175.19** | 23.50 | 50/1 | 1.5 | 14072 | 0.68 | 49 | 0.98 | 14549 | 0.47 | 48 | X* | | | | |
| | **1507.71** | 30.15 | 50/1 | 1.2 | 14072 | 0.56 | 48 | 0.77 | 14726 | 0.39 | 47 | X* | | | | |
| | **1671.69** | 33.43 | 50/1 | 1.0 | 14072 | 0.47 | 48 | 0.69 | 14788 | 0.35 | 47 | X* | | | | |
| | **2200.07** | 44.00 | 50/1 | 0.80 | 14072 | 0.38 | 47 | 0.52 | 14638 | 0.27 | 46 | X* | | | | |
| | **3735.10** | 74.70 | 50/1 | 0.47 | 14072 | 0.23 | 46 | 0.31 | 14390 | 0.15 | 46 | X* | | | | |
| | **4646.10** | 92.92 | 50/1 | 0.38 | 14072 | 0.19 | 46 | 0.25 | 14328 | 0.12 | 45 | X* | | | | |
| | **5875.95** | 117.52 | 50/1 | 0.30 | 14072 | 0.15 | 46 | 0.20 | 14328 | 0.11 | 45 | X* | | | | |

W + NEMA

* Caution - The motor power may exceed the gear unit's mechanical torque capacity. Limits Based on 1750rpm input speed.
◈ The mechanical power limit of the solid input shaft type "W" may limit the reducer rating.
All ratings are mechanical. See page 14 for thermal considerations.

| lb | W | 56C | 140TC |
|---|---|---|---|
| SK 33100 | 150 | 161 | 161 |


Send Quote Requests to info@automatedpt.com
Call +1(800)985-6929 To Order or Order Online At Nordgearmotors.com





# SK 33100 NEMA-C + W Ratings & Combinations

| Model Type | Gear Ratio | | | $n_2$ = Output Speed<br>$T_{2\,max}$ = Output Torque*<br>$HP_{max}$ = Input power ◈<br>$\eta$ = Efficiencies | | | | | | | | | | | | NEMA C-Face* Available Combinations | | | | |
|---|---|---|---|---|---|---|---|---|---|---|---|---|---|---|---|---|---|---|---|---|
| | Total | Helical Gears | Worm Gears | $n_1$ = 875 rpm | | | | $n_1$ = 580 rpm | | | | $n_1$ = 300 rpm | | | | | | | | |
| | $i_{tot}$ | $i_1$ | $\frac{z_2}{z_1} = i_2$ | $n_2$ [rpm] | $T_{2\,max}$ [lb-in] | $HP_{max}$ [hp] | $\eta$ [%] | $n_2$ [rpm] | $T_{2\,max}$ [lb-in] | $HP_{max}$ [hp] | $\eta$ [%] | $n_2$ [rpm] | $T_{2\,max}$ [lb-in] | $HP_{max}$ [hp] | $\eta$ [%] | 56C | 140TC | 180TC | 210TC | 250TC |
| **SK 33100** | 53.70 | 10.39 | 31/6 | 16 | 6160 | 1.00 | 85 | 11 | 6089 | 0.66 | 84 | 5.6 | 6018 | 0.36 | 83 | X | X | | | |
| | 69.85 | 5.99 | 35/3 | 13 | 10487 | 1.00 | 80 | 8.3 | 10868 | 0.66 | 79 | 4.3 | 11540 | 0.36 | 77 | X | X | | | |
| | 85.21 | 7.30 | 35/3 | 10 | 10416 | 1.00 | 79 | 6.8 | 10841 | 0.66 | 78 | 3.5 | 11567 | 0.36 | 76 | X | X | | | |
| | 109.32 | 9.37 | 35/3 | 8.0 | 11284 | 1.00 | 78 | 5.3 | 11753 | 0.66 | 77 | 2.7 | 12363 | 0.36 | 76 | X | X | | | |
| | 121.21 | 10.39 | 35/3 | 7.2 | 11275 | 1.00 | 78 | 4.8 | 11691 | 0.66 | 77 | 2.5 | 12434 | 0.36 | 76 | X | X | | | |
| | 142.38 | 7.30 | 39/2 | 6.1 | 12638 | 1.00 | 71 | 4.1 | 13151 | 0.66 | 69 | 2.1 | 14027 | 0.36 | 67 | X | X | | | |
| | 182.66 | 9.37 | 39/2 | 4.8 | 13470 | 1.00 | 70 | 3.2 | 14027 | 0.66 | 68 | 1.6 | 15027 | 0.36 | 67 | X | X | | | |
| | 257.63 | 13.21 | 39/2 | 3.4 | 14275 | 1.00 | 69 | 2.3 | 14841 | 0.66 | 68 | 1.2 | 15788 | 0.36 | 66 | X | X | | | |
| | 299.28 | 5.99 | 50/1 | 2.9 | 14664 | 1.00 | 53 | 1.9 | 15195 | 0.66 | 50 | 1.0 | 16125 | 0.36 | 48 | X | X | | | |
| | 365.07 | 7.30 | 50/1 | 2.4 | 14567 | 1.09 | 51 | 1.6 | 15160 | 0.79 | 49 | 0.82 | 16169 | 0.44 | 47 | X | X* | | | |
| | 468.37 | 9.37 | 50/1 | 1.9 | 15080 | 0.91 | 50 | 1.2 | 15700 | 0.62 | 48 | 0.64 | 16824 | 0.36 | 47 | X | X* | | | |
| | 519.31 | 10.39 | 50/1 | 1.7 | 15063 | 0.82 | 50 | 1.1 | 15620 | 0.56 | 48 | 0.58 | 16753 | 0.34 | 46 | X | X* | | | |
| | 660.60 | 13.21 | 50/1 | 1.3 | 15027 | 0.63 | 49 | 0.88 | 15629 | 0.47 | 47 | 0.45 | 16629 | 0.25 | 46 | X | X* | | | |
| | **1175.19** | 23.50 | 50/1 | 0.74 | 15080 | 0.38 | 47 | 0.49 | 15647 | 0.27 | 46 | 0.26 | 16178 | 0.15 | 45 | X* | | | | |
| | **1507.71** | 30.15 | 50/1 | 0.58 | 15134 | 0.31 | 46 | 0.38 | 15567 | 0.20 | 46 | 0.20 | 15992 | 0.11 | 45 | X* | | | | |
| | **1671.69** | 33.43 | 50/1 | 0.52 | 15151 | 0.27 | 46 | 0.35 | 15541 | 0.19 | 46 | 0.18 | 16266 | 0.11 | 45 | X* | | | | |
| | **2200.07** | 44.00 | 50/1 | 0.40 | 14912 | 0.20 | 46 | 0.26 | 15195 | 0.13 | 46 | 0.14 | 16550 | 0.08 | 45 | X* | | | | |
| | **3735.10** | 74.70 | 50/1 | 0.23 | 14541 | 0.12 | 45 | 0.16 | 15426 | 0.08 | 45 | 0.08 | 16797 | 0.05 | 45 | X* | | | | |
| | **4646.10** | 92.92 | 50/1 | 0.19 | 14629 | 0.09 | 45 | 0.12 | 15780 | 0.07 | 45 | 0.06 | 16859 | 0.04 | 45 | X* | | | | |
| | **5875.95** | 117.52 | 50/1 | 0.15 | 15178 | 0.08 | 45 | 0.10 | 16072 | 0.05 | 45 | 0.05 | 16921 | 0.03 | 45 | X* | | | | |

W + NEMA

* Caution - The motor power may exceed the gear unit's mechanical torque capacity. Limits Based on 1750rpm input speed.
◈ The mechanical power limit of the solid input shaft type "W" may limit the reducer rating.
All ratings are mechanical. See page 14 for thermal considerations.

| lb | W | 56C | 140TC |
|---|---|---|---|
| **SK 33100** | 150 | 161 | 161 |


Send Quote Requests to info@automatedpt.com
Call +1(800)985-6929 To Order or Order Online At Nordgearmotors.com

# SK 42125
# NEMA-C + W
# Ratings & Combinations





DRIVESYSTEMS

| Model Type | Gear Ratio | | | $n_2$ = Output Speed<br>$T_{2\,max}$ = Output Torque*<br>$HP_{max}$ = Input power ◈<br>η = Efficiencies | | | | | | | | NEMA C-Face* Available Combinations | | | | |
|---|---|---|---|---|---|---|---|---|---|---|---|---|---|---|---|---|
| | | | | $n_1$ =1750 rpm | | | | $n_1$ =1150 rpm | | | | | | | | |
| | Total | Helical Gears | Worm Gears | $n_2$ | $T_{2\,max}$ | $HP_{max}$ | η | $n_2$ | $T_{2\,max}$ | $HP_{max}$ | η | | | | | |
| | $i_{tot}$ | $i_1$ | $\frac{z_2}{z_1} = i_2$ | [rpm] | [lb-in] | [hp] | [%] | [rpm] | [lb-in] | [hp] | [%] | 56C | 140TC | 180TC | 210TC | 250TC |
| SK 42125 | 7.29 | 1.41 | 31/6 | 240 | 8319 | 20.00 | 94 | 158 | 9514 | 13.20 | 93 | | | X | X | X |
| | 7.76 | 1.50 | 31/6 | 226 | 8938 | 20.00 | 94 | 149 | 10151 | 13.20 | 93 | | | X | X | X |
| | 8.43 | 1.63 | 31/6 | 208 | 10089 | 20.00 | 94 | 137 | 11036 | 13.20 | 93 | | | X | X | X |
| | 9.41 | 1.82 | 31/6 | 186 | 10089 | 20.00 | 93 | 123 | 11319 | 13.20 | 93 | X | X | X | X | X |
| | 11.06 | 2.14 | 31/6 | 158 | 10974 | 20.00 | 93 | 104 | 11478 | 13.20 | 92 | X | X | X | X | X |
| | 12.93 | 2.50 | 31/6 | 135 | 10974 | 20.00 | 93 | 89 | 11753 | 13.20 | 92 | X | X | X | X | X |
| | 14.57 | 1.41 | 31/3 | 120 | 11859 | 20.00 | 91 | 79 | 13558 | 13.20 | 90 | | | X | X | X |
| | 15.92 | 3.08 | 31/6 | 110 | 10974 | 20.00 | 92 | 73 | 11629 | 13.20 | 91 | X | X | X | X | X |
| | 18.80 | 1.82 | 31/3 | 93 | 13364 | 20.00 | 91 | 61 | 15001 | 13.20 | 90 | X | X | X | X | X |
| | 22.11 | 2.14 | 31/3 | 79 | 14248 | 19.84 | 90 | 52 | 15762 | 14.61 | 89 | X | X | X | X | X* |
| | 25.83 | 2.50 | 31/3 | 68 | 15134 | 18.14 | 90 | 45 | 16567 | 13.43 | 88 | X | X | X | X | X* |
| | 31.82 | 3.08 | 31/3 | 55 | 16284 | 15.97 | 89 | 36 | 17612 | 11.55 | 87 | X | X | X | X | X* |
| | 35.33 | 3.42 | 31/3 | 50 | 14160 | 12.61 | 89 | 33 | 15249 | 9.17 | 87 | X | X | X | X | |
| | 40.95 | 1.82 | 45/2 | 43 | 16284 | 12.91 | 86 | 28 | 18275 | 9.66 | 84 | X | X | X | X | X* |
| | 48.15 | 2.14 | 45/2 | 36 | 17346 | 11.65 | 85 | 24 | 19196 | 8.91 | 82 | X | X | X | X | X* |
| | 56.25 | 2.50 | 45/2 | 31 | 18231 | 10.67 | 84 | 21 | 19957 | 8.20 | 81 | X | X | X | X | X* |
| | 69.30 | 3.08 | 45/2 | 25 | 19647 | 9.38 | 83 | 17 | 21258 | 7.16 | 80 | X | X | X | X* | X* |
| | 76.95 | 3.42 | 45/2 | 23 | 20266 | 9.02 | 82 | 15 | 21815 | 6.57 | 79 | X | X | X | X* | |
| | 87.30 | 3.88 | 45/2 | 20 | 20886 | 8.18 | 81 | 13 | 22275 | 5.88 | 78 | X | X | X | X* | |
| | 100.58 | 2.14 | 47/1 | 17 | 18850 | 6.86 | 74 | 11 | 20859 | 5.20 | 70 | X | X | X | X* | X* |
| | 117.50 | 2.50 | 47/1 | 15 | 19824 | 6.46 | 73 | 9.8 | 21700 | 4.96 | 68 | X | X | X | X* | X* |
| | 144.76 | 3.08 | 47/1 | 12 | 21152 | 5.67 | 71 | 8.0 | 22877 | 4.40 | 66 | X | X | X | X* | X* |
| | 160.74 | 3.42 | 47/1 | 11 | 21860 | 5.44 | 70 | 7.2 | 23532 | 4.13 | 65 | X | X | X | X* | |
| | 182.36 | 3.88 | 47/1 | 9.6 | 22656 | 5.07 | 68 | 6.3 | 24169 | 3.78 | 64 | X | X | X | X* | |
| | 201.63 | 4.29 | 47/1 | 8.7 | 23276 | 4.80 | 67 | 5.7 | 24656 | 3.54 | 63 | X | X | X* | X* | |
| | **247.69** | 5.27 | 47/1 | 7.1 | 24426 | 4.24 | 65 | 4.7 | 25842 | 3.22 | 60 | | | X* | X* | |
| | **337.46** | 7.18 | 47/1 | 5.2 | 25222 | 3.35 | 62 | 3.4 | 26798 | 2.49 | 58 | | | X* | X* | |
| | **495.85** | 10.55 | 47/1 | 3.5 | 25222 | 2.41 | 58 | 2.3 | 26231 | 1.74 | 55 | X | X | X* | | |
| | **695.60** | 14.80 | 47/1 | 2.5 | 25222 | 1.82 | 55 | 1.7 | 26276 | 1.34 | 53 | X | X* | | | |



* Caution - The motor power may exceed the gear unit's mechanical torque capacity. Limits Based on 1750rpm input speed.
◈ The mechanical power limit of the solid input shaft type "W" may limit the reducer rating.
All ratings are mechanical. See page 14 for thermal considerations.

| lb | W | 56C | 140TC | 180TC | 210TC | 250TC |
|---|---|---|---|---|---|---|
| SK 42125 | 256 | 245 | 245 | 260 | 291 | 313 |


Send Quote Requests to info@automatedpt.com
Call +1(800)985-6929 To Order or Order Online At Nordgearmotors.com





# SK 42125 NEMA-C + W Ratings & Combinations

| Model Type | Gear Ratio | | | $n_2$ = Output Speed<br>$T_{2\,max}$ = Output Torque*<br>$HP_{max}$ = Input power ◈<br>$\eta$ = Efficiencies | | | | | | | | | | | | NEMA C-Face* Available Combinations | | | | |
|---|---|---|---|---|---|---|---|---|---|---|---|---|---|---|---|---|---|---|---|---|
| | | | | $n_1$ = 875 rpm | | | | $n_1$ = 580 rpm | | | | $n_1$ = 300 rpm | | | | | | | | |
| | $i_{tot}$ | $i_1$ | $\frac{z_2}{z_1} = i_2$ | $n_2$ [rpm] | $T_{2\,max}$ [lb-in] | $HP_{max}$ [hp] | $\eta$ [%] | $n_2$ [rpm] | $T_{2\,max}$ [lb-in] | $HP_{max}$ [hp] | $\eta$ [%] | $n_2$ [rpm] | $T_{2\,max}$ [lb-in] | $HP_{max}$ [hp] | $\eta$ [%] | 56C | 140TC | 180TC | 210TC | 250TC |
| **SK 42125** | 7.29 | 1.41 | 31/6 | 120 | 10222 | 10.00 | 93 | 80 | 10523 | 6.60 | 91 | 41 | 10293 | 3.60 | 89 | | | X | X | X |
| | 7.76 | 1.50 | 31/6 | 113 | 10886 | 10.00 | 92 | 75 | 10797 | 6.60 | 91 | 39 | 10558 | 3.60 | 89 | | | X | X | X |
| | 8.43 | 1.63 | 31/6 | 104 | 10921 | 10.00 | 92 | 69 | 10797 | 6.60 | 91 | 36 | 10558 | 3.60 | 89 | | | X | X | X |
| | 9.41 | 1.82 | 31/6 | 93 | 11195 | 10.00 | 92 | 62 | 11071 | 6.60 | 91 | 32 | 10708 | 3.60 | 88 | X | X | X | X | X |
| | 11.06 | 2.14 | 31/6 | 79 | 11355 | 10.00 | 91 | 52 | 11231 | 6.60 | 90 | 27 | 10974 | 3.60 | 88 | X | X | X | X | X |
| | 12.93 | 2.50 | 31/6 | 68 | 11629 | 10.00 | 91 | 45 | 11372 | 6.60 | 89 | 23 | 11116 | 3.60 | 87 | X | X | X | X | X |
| | 14.57 | 1.41 | 31/3 | 60 | 14567 | 10.00 | 89 | 40 | 15824 | 6.60 | 88 | 21 | 15939 | 3.60 | 84 | | | X | X | X |
| | 15.92 | 3.08 | 31/6 | 55 | 11505 | 10.00 | 90 | 36 | 11372 | 6.60 | 89 | 19 | 10992 | 3.60 | 86 | X | X | X | X | X |
| | 18.80 | 1.82 | 31/3 | 47 | 15886 | 10.00 | 88 | 31 | 16983 | 6.60 | 86 | 16 | 16390 | 3.60 | 83 | X | X | X | X | X |
| | 22.11 | 2.14 | 31/3 | 40 | 16638 | 12.00 | 88 | 26 | 17373 | 8.32 | 86 | 14 | 16567 | 4.49 | 82 | X | X | X | X | X* |
| | 25.83 | 2.50 | 31/3 | 34 | 17381 | 10.78 | 87 | 22 | 17452 | 7.16 | 85 | 12 | 16842 | 3.91 | 82 | X | X | X | X | X* |
| | 31.82 | 3.08 | 31/3 | 27 | 17974 | 8.95 | 86 | 18 | 17558 | 5.97 | 84 | 9.4 | 16930 | 3.11 | 81 | X | X | X | X | X* |
| | 35.33 | 3.42 | 31/3 | 25 | 15762 | 7.36 | 85 | 16 | 16762 | 5.12 | 83 | 8.5 | 17063 | 2.84 | 81 | X | X | X | X | |
| | 40.95 | 1.82 | 45/2 | 21 | 19355 | 7.86 | 82 | 14 | 20736 | 5.83 | 79 | 7.3 | 22700 | 3.55 | 74 | X | X | X | X | X* |
| | 48.15 | 2.14 | 45/2 | 18 | 20258 | 7.14 | 81 | 12 | 21452 | 5.31 | 77 | 6.2 | 23426 | 3.15 | 73 | X | X | X | X | X* |
| | 56.25 | 2.50 | 45/2 | 16 | 20939 | 6.73 | 79 | 10 | 22107 | 4.61 | 76 | 5.3 | 23948 | 2.80 | 72 | X | X | X | X | X* |
| | 69.30 | 3.08 | 45/2 | 13 | 22063 | 5.83 | 78 | 8.4 | 23417 | 4.16 | 75 | 4.3 | 24992 | 2.40 | 71 | X | X | X | X* | X* |
| | 76.95 | 3.42 | 45/2 | 11 | 22559 | 5.11 | 77 | 7.5 | 23984 | 3.86 | 74 | 3.9 | 25585 | 2.27 | 70 | X | X | X | X* | |
| | 87.30 | 3.88 | 45/2 | 10 | 23134 | 4.83 | 76 | 6.6 | 24435 | 3.50 | 73 | 3.4 | 26046 | 2.01 | 70 | X | X | X | X* | |
| | 100.58 | 2.14 | 47/1 | 8.7 | 22010 | 4.53 | 67 | 5.8 | 23311 | 3.40 | 63 | 3.0 | 25453 | 2.16 | 56 | X | X | X | X* | X* |
| | 117.50 | 2.50 | 47/1 | 7.4 | 22762 | 4.12 | 65 | 4.9 | 24037 | 3.06 | 61 | 2.6 | 26046 | 1.96 | 55 | X | X | X | X* | X* |
| | 144.76 | 3.08 | 47/1 | 6.0 | 23753 | 3.59 | 63 | 4.0 | 25205 | 2.71 | 59 | 2.1 | 26904 | 1.66 | 54 | X | X | X | X* | X* |
| | 160.74 | 3.42 | 47/1 | 5.4 | 24329 | 3.36 | 62 | 3.6 | 25869 | 2.55 | 58 | 1.9 | 27594 | 1.57 | 53 | X | X | X | X* | |
| | 182.36 | 3.88 | 47/1 | 4.8 | 25090 | 3.14 | 61 | 3.2 | 26506 | 2.36 | 57 | 1.6 | 28249 | 1.38 | 52 | X | X | X | X* | |
| | 201.63 | 4.29 | 47/1 | 4.3 | 25709 | 2.92 | 60 | 2.9 | 27001 | 2.21 | 56 | 1.5 | 28754 | 1.31 | 52 | X | X | X* | X* | |
| | **247.69** | 5.27 | 47/1 | 3.5 | 26860 | 2.57 | 58 | 2.3 | 27922 | 1.85 | 55 | 1.2 | 29709 | 1.11 | 51 | | | X* | X* | |
| | **337.46** | 7.18 | 47/1 | 2.6 | 27532 | 2.06 | 55 | 1.7 | 28656 | 1.46 | 53 | 0.89 | 30550 | 0.86 | 50 | | | X* | X* | |
| | **495.85** | 10.55 | 47/1 | 1.8 | 26992 | 1.45 | 53 | 1.2 | 27966 | 1.05 | 51 | 0.61 | 30019 | 0.59 | 49 | X | X | X* | | |
| | **695.60** | 14.80 | 47/1 | 1.3 | 26913 | 1.09 | 51 | 0.83 | 27700 | 0.72 | 50 | 0.43 | 26594 | 0.38 | 48 | X | X* | | | |

W + NEMA

* Caution - The motor power may exceed the gear unit's mechanical torque capacity. Limits Based on 1750rpm input speed.
◈ The mechanical power limit of the solid input shaft type "W" may limit the reducer rating.
All ratings are mechanical. See page 14 for thermal considerations.

| | W | 56C | 140TC | 180TC | 210TC | 250TC |
|---|---|---|---|---|---|---|
| **SK 42125** | 256 | 245 | 245 | 260 | 291 | 313 |


Send Quote Requests to info@automatedpt.com
Call +1(800)985-6929 To Order or Order Online At Nordgearmotors.com

# SK 43125
# NEMA-C + W
# Ratings & Combinations





DRIVESYSTEMS

| Model Type | Gear Ratio | | | $n_2$ = Output Speed<br>$T_{2\,max}$ = Output Torque*<br>$HP_{max}$ = Input power ◈<br>$\eta$ = Efficiencies | | | | | | | | NEMA C-Face* Available Combinations | | | | |
|---|---|---|---|---|---|---|---|---|---|---|---|---|---|---|---|---|
| | | | | $n_1$ =1750 rpm | | | | $n_1$ =1150 rpm | | | | | | | | |
| | Total | Helical Gears | Worm Gears | $n_2$ | $T_{2\,max}$ | $HP_{max}$ | $\eta$ | $n_2$ | $T_{2\,max}$ | $HP_{max}$ | $\eta$ | | | | | |
| | $i_{tot}$ | $i_1$ | $\frac{z_2}{z_1} = i_2$ | [rpm] | [lb-in] | [hp] | [%] | [rpm] | [lb-in] | [hp] | [%] | 56C | 140TC | 180TC | 210TC | 250TC |
| SK 43125 | 62.50 | 6.05 | 31/3 | 28 | 13894 | 5.00 | 86 | 18 | 14744 | 3.30 | 84 | X | X | X | X | |
| | 69.99 | 6.78 | 31/3 | 25 | 13806 | 5.00 | 85 | 17 | 14682 | 3.30 | 83 | X | X | X | | |
| | 86.22 | 8.35 | 31/3 | 20 | 15576 | 5.00 | 84 | 13 | 16390 | 3.30 | 82 | X | X | X | | |
| | 110.97 | 4.93 | 45/2 | 16 | 20974 | 5.00 | 79 | 10 | 22152 | 3.30 | 76 | X | X | X | | |
| | 130.49 | 5.80 | 45/2 | 13 | 21948 | 5.00 | 78 | 8.9 | 23276 | 3.30 | 75 | X | X | X | | |
| | 152.44 | 6.78 | 45/2 | 11 | 22922 | 5.00 | 77 | 7.6 | 24382 | 3.30 | 74 | X | X | X | | |
| | 187.80 | 8.35 | 45/2 | 9.3 | 22922 | 4.45 | 76 | 6.2 | 24116 | 3.24 | 73 | X | X | X* | | |
| | 236.58 | 10.51 | 45/2 | 7.4 | 24868 | 3.94 | 74 | 4.9 | 25869 | 2.79 | 72 | X | X | X* | | |
| | 269.76 | 11.99 | 45/2 | 6.5 | 24868 | 3.51 | 73 | 4.3 | 25789 | 2.48 | 71 | X | X | X* | | |
| | **323.51** | 14.38 | 45/2 | 5.4 | 21240 | 2.52 | 72 | 3.6 | 20939 | 1.70 | 70 | X | X | | | |
| | **380.39** | 16.91 | 45/2 | 4.6 | 23098 | 2.37 | 71 | 3.0 | 23231 | 1.61 | 69 | X | X | | | |
| | **444.38** | 19.75 | 45/2 | 3.9 | 26462 | 2.33 | 70 | 2.6 | 27134 | 1.62 | 69 | X | X | | | |
| | **547.47** | 24.33 | 45/2 | 3.2 | 27346 | 1.98 | 70 | 2.1 | 28329 | 1.39 | 68 | X | X* | | | |
| | **607.91** | 27.02 | 45/2 | 2.9 | 23630 | 1.58 | 69 | 1.90 | 24612 | 1.09 | 68 | X | X* | | | |
| | **689.67** | 30.65 | 45/2 | 2.5 | 25046 | 1.43 | 69 | 1.70 | 26231 | 1.06 | 67 | X | X* | | | |
| | **794.58** | 16.91 | 47/1 | 2.2 | 27346 | 1.77 | 54 | 1.50 | 28559 | 1.30 | 52 | X | X* | | | |
| | **928.25** | 19.75 | 47/1 | 1.9 | 27346 | 1.55 | 53 | 1.20 | 28417 | 1.06 | 51 | X | X* | | | |
| | **1198.50** | 25.50 | 47/1 | 1.5 | 27346 | 1.25 | 52 | 0.96 | 28400 | 0.87 | 50 | X | X* | | | |
| | **1476.55** | 31.42 | 47/1 | 1.2 | 27346 | 1.02 | 51 | 0.78 | 28665 | 0.72 | 49 | X | X* | | | |
| | **1639.55** | 34.88 | 47/1 | 1.1 | 27346 | 0.94 | 51 | 0.70 | 28780 | 0.66 | 49 | X* | X* | | | |
| | **1860.07** | 39.58 | 47/1 | 0.94 | 27346 | 0.82 | 50 | 0.62 | 28594 | 0.58 | 49 | X* | X* | | | |
| | **2056.63** | 43.76 | 47/1 | 0.85 | 27346 | 0.74 | 50 | 0.56 | 28462 | 0.51 | 49 | X* | X* | | | |
| | **2526.44** | 53.75 | 47/1 | 0.69 | 27346 | 0.62 | 49 | 0.46 | 28232 | 0.43 | 48 | X* | X* | | | |
| | **3442.09** | 73.24 | 47/1 | 0.51 | 27346 | 0.46 | 48 | 0.34 | 27984 | 0.31 | 48 | X* | X* | | | |
| | **5057.67** | 107.61 | 47/1 | 0.35 | 27346 | 0.32 | 48 | 0.23 | 27771 | 0.21 | 47 | X* | X* | | | |
| | **7095.12** | 150.96 | 47/1 | 0.25 | 26550 | 0.23 | 47 | 0.16 | 26550 | 0.15 | 47 | X* | X* | | | |

W + NEMA

* Caution - The motor power may exceed the gear unit's mechanical torque capacity. Limits Based on 1750rpm input speed.
◈ The mechanical power limit of the solid input shaft type "W" may limit the reducer rating.
All ratings are mechanical. See page 14 for thermal considerations.

| lb | W | 56C | 140TC | 180TC | 210TC |
|---|---|---|---|---|---|
| SK 43125 | 271 | 276 | 276 | 284 | 315 |


Send Quote Requests to info@automatedpt.com
Call +1(800)985-6929 To Order or Order Online At Nordgearmotors.com




# SK 43125 NEMA-C + W Ratings & Combinations

| Model Type | Gear Ratio | | | $n_2$ = Output Speed<br>$T_{2\,max}$ = Output Torque*<br>$HP_{max}$ = Input power ◈<br>$\eta$ = Efficiencies | | | | | | | | | | | | NEMA C-Face* Available Combinations | | | | |
|---|---|---|---|---|---|---|---|---|---|---|---|---|---|---|---|---|---|---|---|---|
| | | | | $n_1$ = 875 rpm | | | | $n_1$ = 580 rpm | | | | $n_1$ = 300 rpm | | | | | | | | |
| | $i_{tot}$ | $i_1$ | $\frac{z_2}{z_1} = i_2$ | $n_2$ [rpm] | $T_{2\,max}$ [lb-in] | $HP_{max}$ [hp] | $\eta$ [%] | $n_2$ [rpm] | $T_{2\,max}$ [lb-in] | $HP_{max}$ [hp] | $\eta$ [%] | $n_2$ [rpm] | $T_{2\,max}$ [lb-in] | $HP_{max}$ [hp] | $\eta$ [%] | 56C | 140TC | 180TC | 210TC | 250TC |
| **SK 43125** | 62.50 | 6.05 | 31/3 | 14 | 15240 | 2.50 | 83 | 9.3 | 15797 | 1.65 | 81 | 4.8 | 16222 | 0.90 | 79 | X | X | X | X | |
| | 69.99 | 6.78 | 31/3 | 13 | 15116 | 2.50 | 82 | 8.3 | 15718 | 1.65 | 80 | 4.3 | 16018 | 0.90 | 78 | X | X | X | | |
| | 86.22 | 8.35 | 31/3 | 10 | 16771 | 2.50 | 81 | 6.7 | 16726 | 1.65 | 80 | 3.5 | 16302 | 0.90 | 78 | X | X | X | | |
| | 110.97 | 4.93 | 45/2 | 7.9 | 23090 | 2.50 | 74 | 5.2 | 24081 | 1.65 | 72 | 2.7 | 25630 | 0.90 | 69 | X | X | X | | |
| | 130.49 | 5.80 | 45/2 | 6.7 | 24090 | 2.50 | 73 | 4.4 | 24948 | 1.65 | 71 | 2.3 | 26541 | 0.90 | 68 | X | X | X | | |
| | 152.44 | 6.78 | 45/2 | 5.7 | 25099 | 2.50 | 72 | 3.8 | 26090 | 1.65 | 70 | 2.0 | 27771 | 0.90 | 68 | X | X | X | | |
| | 187.80 | 8.35 | 45/2 | 4.7 | 24683 | 2.59 | 71 | 3.1 | 25762 | 1.84 | 69 | 1.6 | 27541 | 1.05 | 67 | X | X | X* | | |
| | 236.58 | 10.51 | 45/2 | 3.7 | 26621 | 2.23 | 70 | 2.5 | 27577 | 1.58 | 69 | 1.3 | 29603 | 0.91 | 67 | X | X | X* | | |
| | 269.76 | 11.99 | 45/2 | 3.2 | 26585 | 1.93 | 70 | 2.2 | 27497 | 1.41 | 68 | 1.1 | 29470 | 0.76 | 67 | X | X | X* | | |
| | **323.51** | 14.38 | 45/2 | 2.7 | 20638 | 1.29 | 69 | 1.8 | 20337 | 0.86 | 68 | 0.93 | 19744 | 0.44 | 66 | X | X | | | |
| | **380.39** | 16.91 | 45/2 | 2.3 | 22895 | 1.23 | 68 | 1.5 | 22559 | 0.80 | 67 | 0.79 | 22222 | 0.42 | 66 | X | X | | | |
| | **444.38** | 19.75 | 45/2 | 2.0 | 26745 | 1.25 | 68 | 1.3 | 26346 | 0.80 | 67 | 0.68 | 25957 | 0.43 | 66 | X | X | | | |
| | **547.47** | 24.33 | 45/2 | 1.6 | 29329 | 1.11 | 67 | 1.1 | 30055 | 0.79 | 66 | 0.55 | 30055 | 0.40 | 66 | X | X* | | | |
| | **607.91** | 27.02 | 45/2 | 1.4 | 25382 | 0.84 | 67 | 0.95 | 26187 | 0.60 | 66 | 0.49 | 26966 | 0.32 | 66 | X | X* | | | |
| | **689.67** | 30.65 | 45/2 | 1.3 | 26939 | 0.83 | 67 | 0.84 | 27692 | 0.56 | 66 | 0.43 | 28541 | 0.29 | 65 | X | X* | | | |
| | **794.58** | 16.91 | 47/1 | 1.1 | 29152 | 0.99 | 51 | 0.73 | 30630 | 0.72 | 49 | 0.38 | 32126 | 0.40 | 48 | X | X* | | | |
| | **928.25** | 19.75 | 47/1 | 0.94 | 29223 | 0.87 | 50 | 0.62 | 30550 | 0.62 | 49 | 0.32 | 31807 | 0.34 | 48 | X | X* | | | |
| | **1198.50** | 25.50 | 47/1 | 0.73 | 29347 | 0.70 | 49 | 0.48 | 30347 | 0.48 | 48 | 0.25 | 29913 | 0.25 | 47 | X | X* | | | |
| | **1476.55** | 31.42 | 47/1 | 0.59 | 29426 | 0.56 | 49 | 0.39 | 30223 | 0.39 | 48 | 0.20 | 31294 | 0.21 | 47 | X | X* | | | |
| | **1639.55** | 34.88 | 47/1 | 0.53 | 29462 | 0.51 | 49 | 0.35 | 30170 | 0.35 | 48 | 0.18 | 31807 | 0.19 | 47 | X* | X* | | | |
| | **1860.07** | 39.58 | 47/1 | 0.47 | 29178 | 0.46 | 48 | 0.31 | 29798 | 0.31 | 48 | 0.16 | 32010 | 0.17 | 47 | X* | X* | | | |
| | **2056.63** | 43.76 | 47/1 | 0.43 | 28984 | 0.42 | 48 | 0.28 | 29541 | 0.27 | 48 | 0.15 | 32143 | 0.16 | 47 | X* | X* | | | |
| | **2526.44** | 53.75 | 47/1 | 0.35 | 28647 | 0.34 | 48 | 0.23 | 29090 | 0.23 | 47 | 0.12 | 32373 | 0.13 | 47 | X* | X* | | | |
| | **3442.09** | 73.24 | 47/1 | 0.25 | 28285 | 0.24 | 47 | 0.17 | 29913 | 0.17 | 47 | 0.09 | 32630 | 0.09 | 47 | X* | X* | | | |
| | **5057.67** | 107.61 | 47/1 | 0.17 | 29125 | 0.16 | 47 | 0.11 | 31037 | 0.12 | 47 | 0.06 | 32842 | 0.07 | 47 | X* | X* | | | |
| | **7095.12** | 150.96 | 47/1 | 0.12 | 26550 | 0.11 | 47 | 0.08 | 26550 | 0.07 | 47 | 0.04 | 26550 | 0.04 | 47 | X* | X* | | | |



* Caution - The motor power may exceed the gear unit's mechanical torque capacity. Limits Based on 1750rpm input speed.
◈ The mechanical power limit of the solid input shaft type "W" may limit the reducer rating.
All ratings are mechanical. See page 14 for thermal considerations.

| lb | W | 56C | 140TC | 180TC | 210TC |
|---|---|---|---|---|---|
| **SK 43125** | 271 | 276 | 276 | 284 | 315 |


Send Quote Requests to info@automatedpt.com
Call +1(800)985-6929 To Order or Order Online At Nordgearmotors.com

Send Quote Requests to info@automatedpt.com
Call +1(800)985-6929 To Order or Order Online At Nordgearmotors.com

# Notes

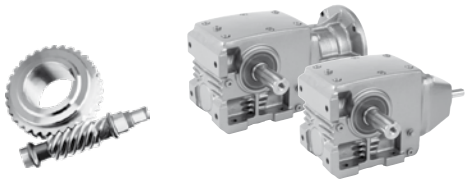

DRIVESYSTEMS

NOTES


Send Quote Requests to info@automatedpt.com
Call +1(800)985-6929 To Order or Order Online At Nordgearmotors.com

Send Quote Requests to info@automatedpt.com
Call +1(800)985-6929 To Order or Order Online At Nordgearmotors.com

# Right-angle Helical-worm Dimensions

## Dimensions

- Gearmotors
- Reducers C-Face
- Options
- Shafts

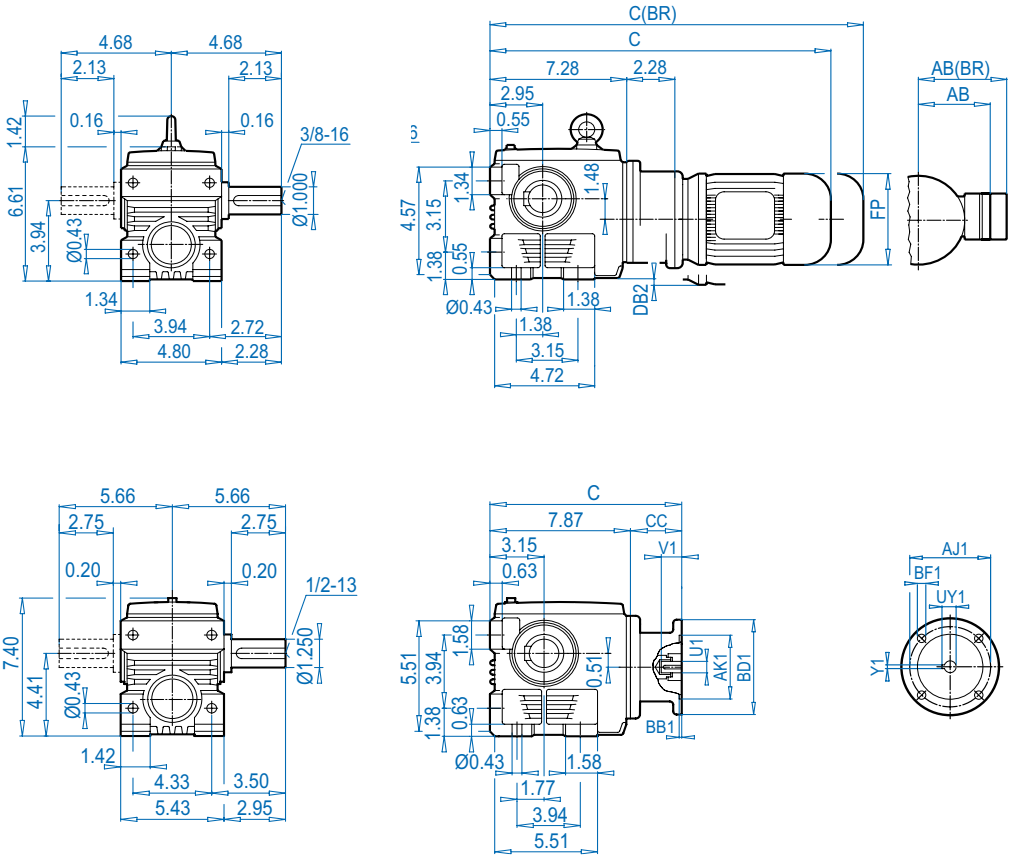


DRIVESYSTEMS

www.nord.com

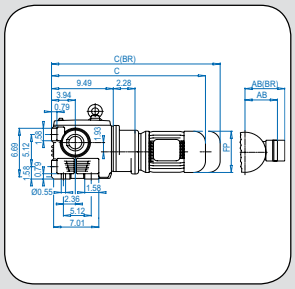

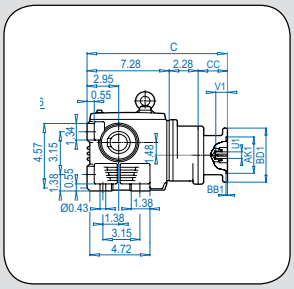

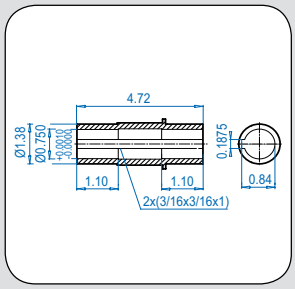


Send Quote Requests to info@automatedpt.com
Call +1(800)985-6929 To Order or Order Online At Nordgearmotors.com

# SK 02040 + Motor



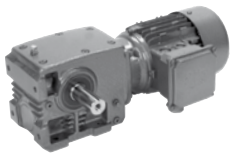

## SK 02040

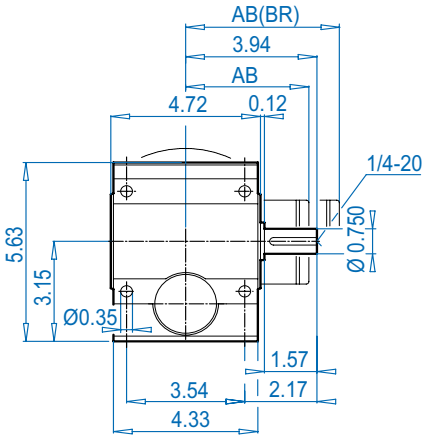


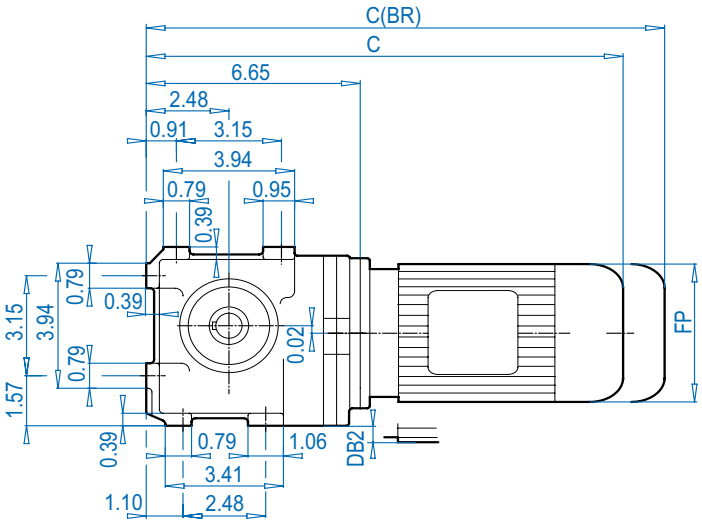


## SK 02040VF

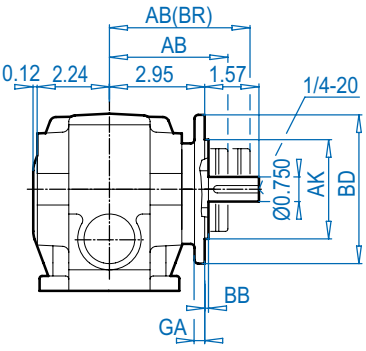


## SK 02040AF

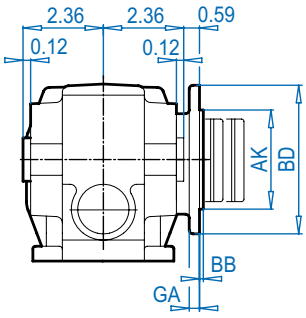


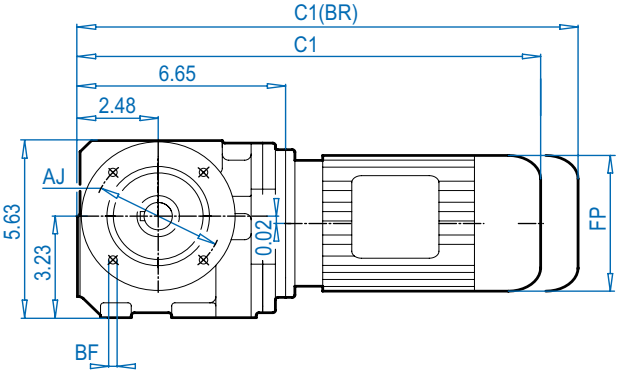


## SK 02040V

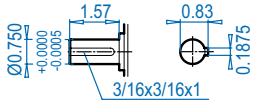


## SK 02040AF

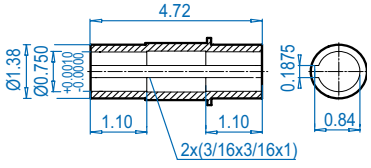


## SK 02040AFB ⇨📖 672

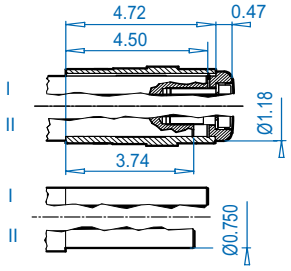


### Mounting flange

| BD (mm) | AJ | AK | | BB | BF | GA |
|---|---|---|---|---|---|---|
| 4.72 (120) | 3.94 | 3.150 | + 0.0005<br>- 0.0004 | 0.12 | 0.26 | 0.32 |
| 6.30 (160) | 5.12 | 4.331 | + 0.0005<br>- 0.0004 | 0.14 | 0.35 | 0.39 |

### Motor dimensions

| Standard efficiency | 63S/L | 71S/L | 80S/L | 90S/L | | | For Other Connection Possibilities please see ⇨📖 666 & 667 |
|---|---|---|---|---|---|---|---|
| Energy efficiency | | | 80LH | 90SH | | | |
| AB | 4.53 | 4.88 | 5.59 | 5.79 | | | |
| AB (BR) | 4.84 | 5.24 | 5.63 | 5.83 | | | |
| C1 | 14.21 | 15.08 | 15.94 | 17.52 | | | |
| C1 (BR) | 16.42 | 17.36 | 18.46 | 20.47 | | | |
| C | 14.21 | 15.08 | 15.94 | 17.52 | | | |
| C (BR) | 16.42 | 17.36 | 18.46 | 20.47 | | | |
| FP | 5.12 | 5.71 | 6.50 | 7.20 | | | |
| DB2 | - | - | 0.12 | 0.47 | | | |



**(BR)** denotes Brakemotor




Send Quote Requests to info@automatedpt.com
Call +1(800)985-6929 To Order or Order Online At Nordgearmotors.com

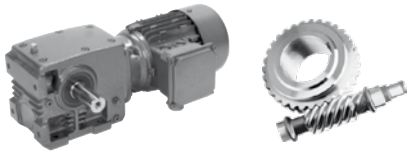

# SK 02040 + Motor

## SK 02040AZ

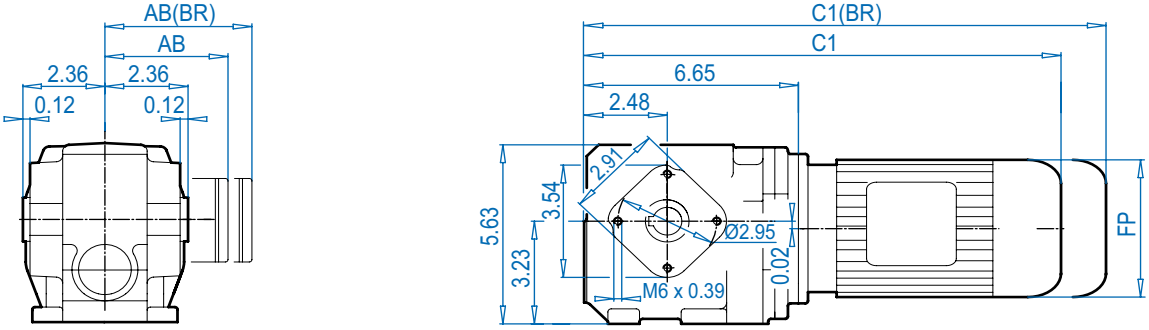


## SK 02040AZ**D**

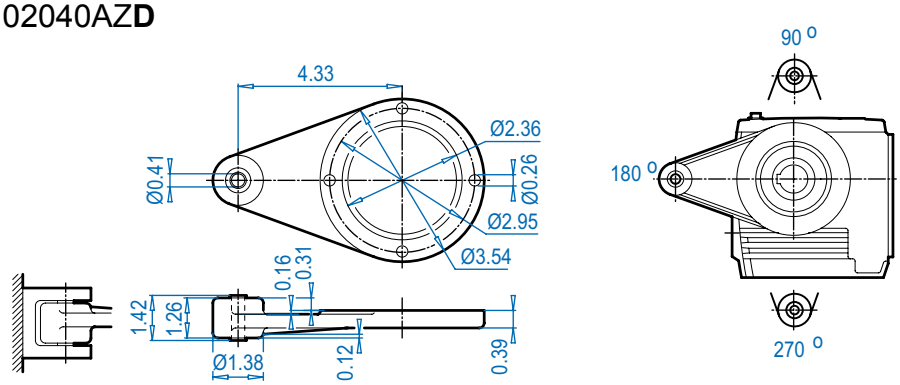


## SK 02040AZ

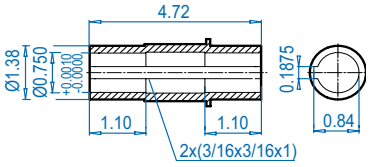


## SK 02040AZ**B** ⇨🕮 672

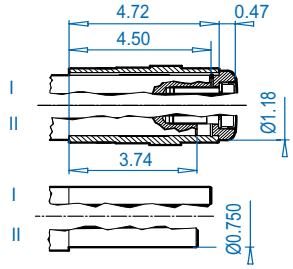


**Motor dimensions**

| Standard efficiency | 63S/L | 71S/L | 80S/L | 90S/L | | | For Other Connection Possibilities please see ⇨🕮 666 & 667 |
|---|---|---|---|---|---|---|---|
| Energy efficiency | | | 80LH | 90SH | | | |
| **AB** | 4.53 | 4.88 | 5.59 | 5.79 | | | 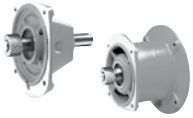 |
| **AB(BR)** | 4.84 | 5.24 | 5.63 | 5.83 | | | |
| **C1** | 14.21 | 15.08 | 15.94 | 17.52 | | | |
| **C1(BR)** | 16.42 | 17.36 | 18.46 | 20.47 | | | |
| **FP** | 5.12 | 5.71 | 6.50 | 7.20 | | | |

**(BR)** denotes Brakemotor

Dimensions in Inches
DIMENSIONS
ALTERNATE SHAFTS SEE PAGES 669 - 671


Send Quote Requests to info@automatedpt.com
Call +1(800)985-6929 To Order or Order Online At Nordgearmotors.com

# SK 02040 + NEMA





## SK 02040

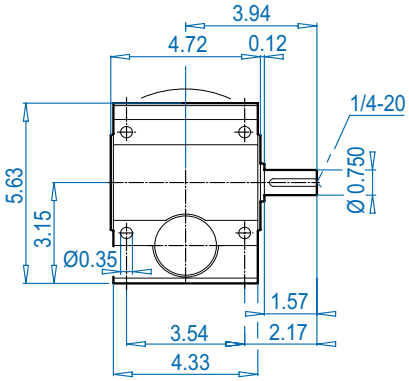


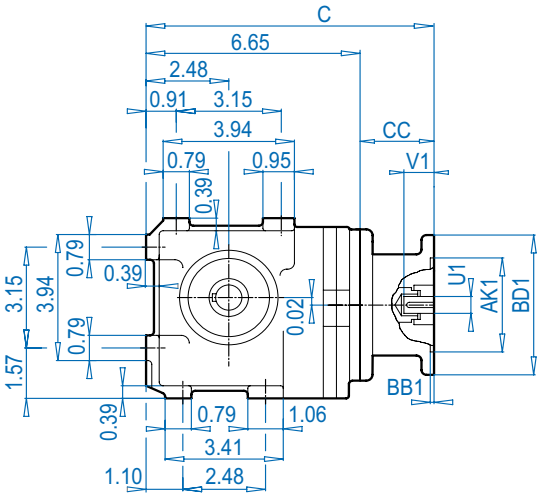


## NEMA Input

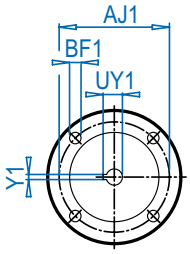


DIMENSIONS

Dimensions in Inches

## SK 02040VF

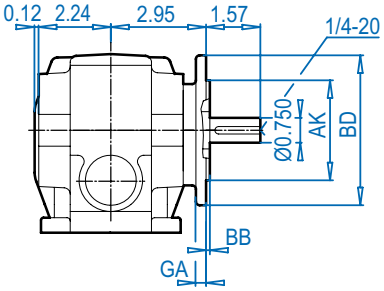


## SK 02040AF

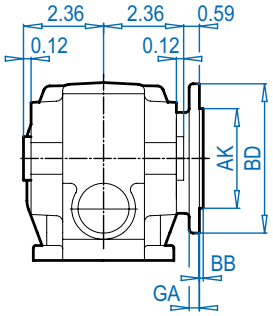


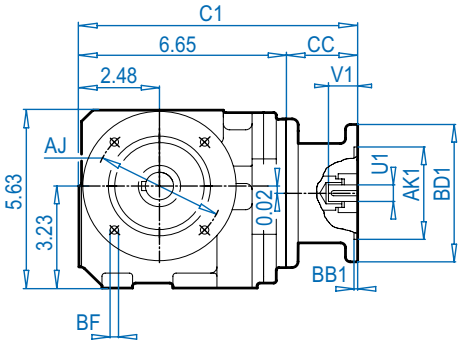


ALTERNATE SHAFTS SEE PAGES 669 - 671

## SK 02040V

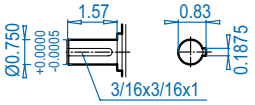


## SK 02040AF

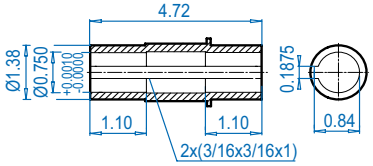


## SK 02040AFB ⇨🕮 672

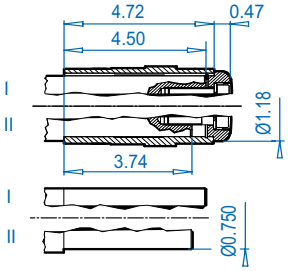


### Mounting flange

| BD (mm) | AJ | AK | BB | BF | GA |
|---|---|---|---|---|---|
| 4.72 (120) | 3.94 | 3.150 + 0.0005 - 0.0004 | 0.12 | 0.26 | 0.32 |
| 6.30 (160) | 5.12 | 4.331 + 0.0005 - 0.0004 | 0.14 | 0.35 | 0.39 |

### NEMA Dimensions

| Type | AJ1 | AK1 | BB1 | BD1 | BF1 | U1 | V1 | UY1 | Y1 | C | C1 | CC |
|---|---|---|---|---|---|---|---|---|---|---|---|---|
| **56C** | 5.88 | 4.500 | 0.18 | 6.61 | 0.43 | 0.625 | 2.06 | 0.71 | 0.188 | 10.94 | 10.94 | 4.29 |
| **140TC** | 5.88 | 4.500 | 0.18 | 6.61 | 0.43 | 0.875 | 2.12 | 0.96 | 0.188 | 10.94 | 10.94 | 4.29 |



Send Quote Requests to info@automatedpt.com
Call +1(800)985-6929 To Order or Order Online At Nordgearmotors.com

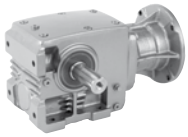


# SK 02040 + NEMA

## SK 02040AZ

### NEMA Input

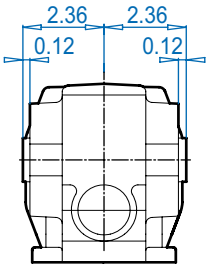


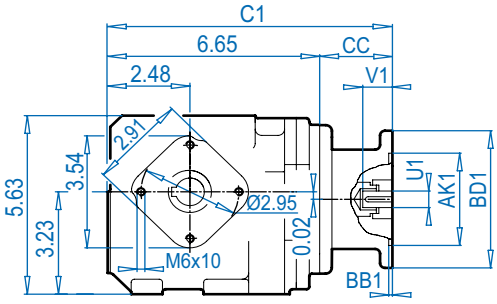


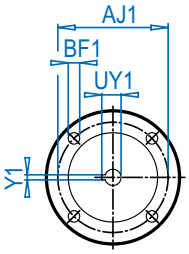


## SK 02040AZ**D**

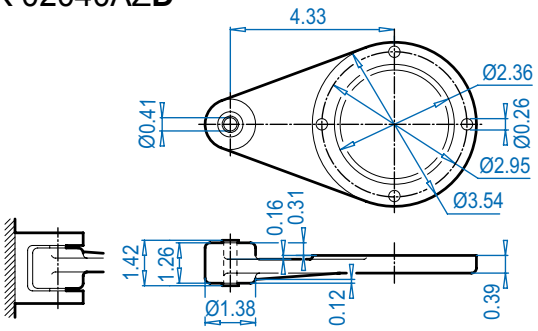


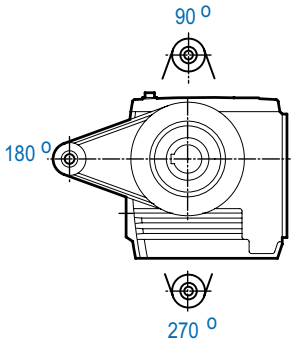


Dimensions in Inches
DIMENSIONS
ALTERNATE SHAFTS SEE PAGES 669 - 671

## SK 02040AZ

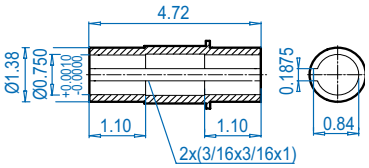


## SK 02040AZ**B**

⇨📖 672

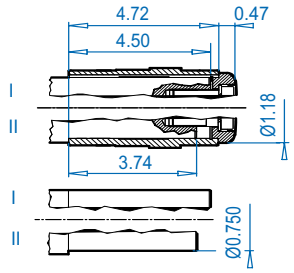


**NEMA Dimensions**

| Type | AJ1 | AK1 | BB1 | BD1 | BF1 | U1 | V1 | UY1 | Y1 | C1 | CC |
|---|---|---|---|---|---|---|---|---|---|---|---|
| **56C** | 5.88 | 4.500 | 0.18 | 6.61 | 0.43 | 0.625 | 2.06 | 0.71 | 0.188 | 10.94 | 4.29 |
| **140TC** | 5.88 | 4.500 | 0.18 | 6.61 | 0.43 | 0.875 | 2.12 | 0.96 | 0.188 | 10.94 | 4.29 |


Send Quote Requests to info@automatedpt.com
Call +1(800)985-6929 To Order or Order Online At Nordgearmotors.com

# SK 02050 + Motor



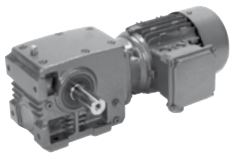

## SK 02050

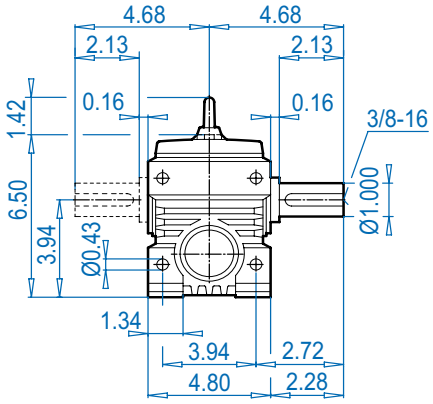


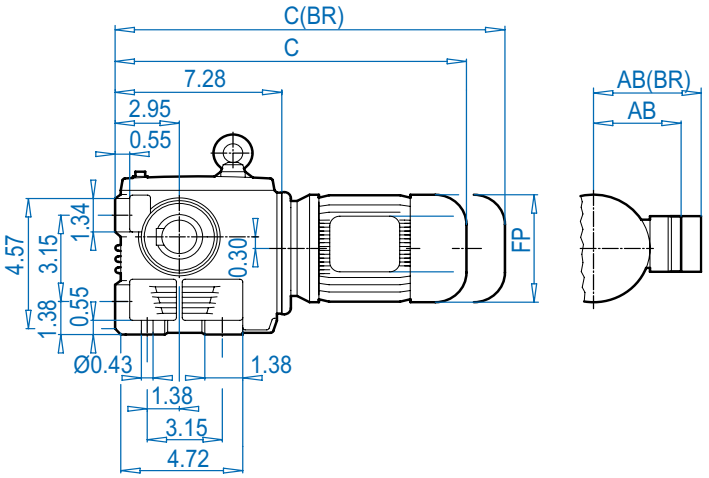


## SK 02050VF

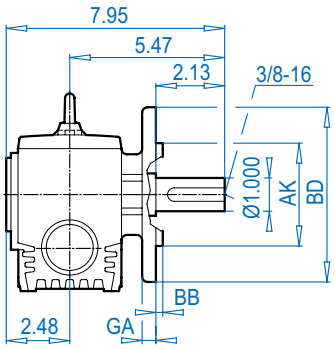


## SK 02050AF

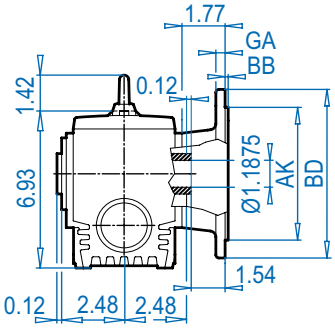


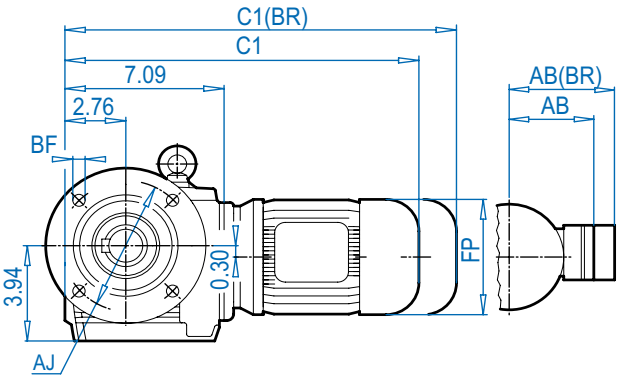


DIMENSIONS

Dimensions in Inches

ALTERNATE SHAFTS SEE PAGES 669 - 671

## SK 02050V

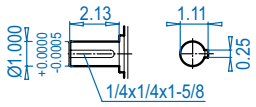


## SK 02050AF

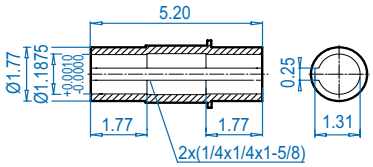


## SK 02050AFB ⇨📖 672

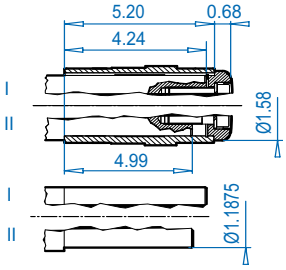


### Mounting flange

| Type | BD (mm) | AJ | AK | BB | BF | GA |
|---|---|---|---|---|---|---|
| SK 02050VF | 6.30 (160) | 5.12 | 4.331 + 0.0005 - 0.0004 | 0.16 | 0.35 | 0.39 |
| SK 02050AF | 7.87 (200) | 6.50 | 5.118 + 0.0005 - 0.0004 | 0.14 | 0.43 | 0.47 |

### Motor dimensions

| Standard efficiency | 63S/L | 71S/L | 80S/L | 90S/L | | | For Other Connection Possibilities please see ⇨📖 666 & 667 |
|---|---|---|---|---|---|---|---|
| Energy efficiency | | | 80LH | 90SH/LH | | | |
| AB | 4.53 | 4.88 | 5.59 | 5.79 | | |  |
| AB (BR) | 4.84 | 5.24 | 5.63 | 5.83 | | | |
| C1 | 14.80 | 16.38 | 17.36 | 18.98 | | | |
| C1 (BR) | 17.01 | 18.66 | 19.89 | 21.93 | | | |
| C | 15.00 | 16.57 | 17.56 | 19.17 | | | |
| C (BR) | 17.20 | 18.86 | 20.08 | 22.13 | | | |
| FP | 5.12 | 5.71 | 6.50 | 7.20 | | | |

**(BR)** denotes Brakemotor



Send Quote Requests to info@automatedpt.com
Call +1(800)985-6929 To Order or Order Online At Nordgearmotors.com

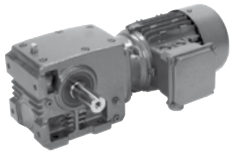

# SK 02050 + Motor

## SK 02050AZ

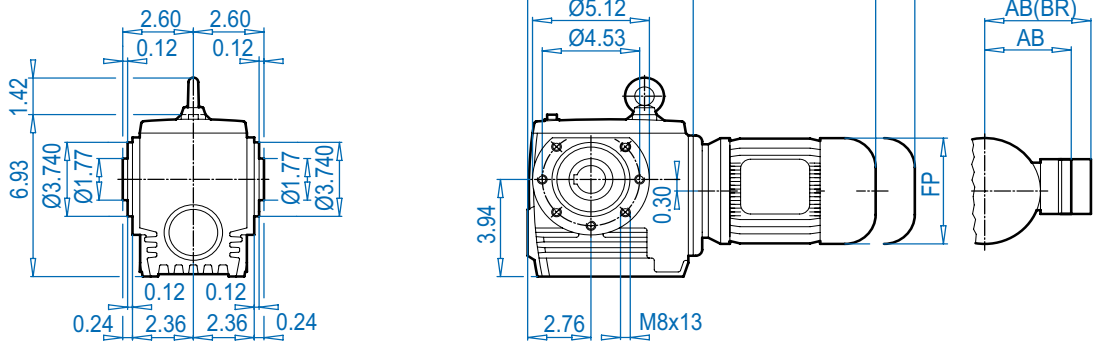


## SK 02050AZ**D**

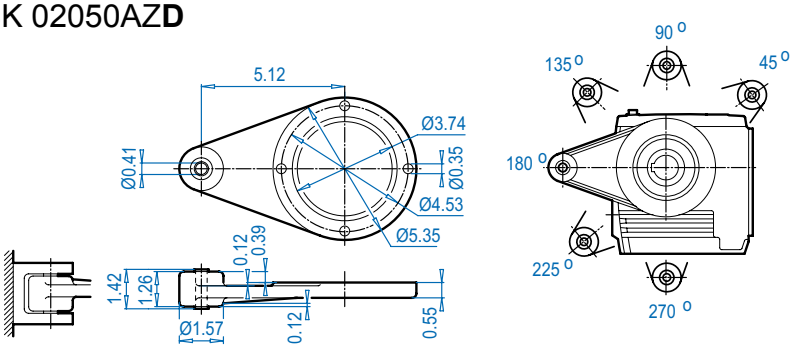


## SK 02050AZ**SH**

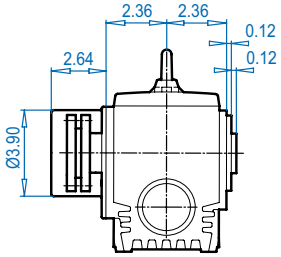


Dimensions in Inches
DIMENSIONS

## SK 02050AZ

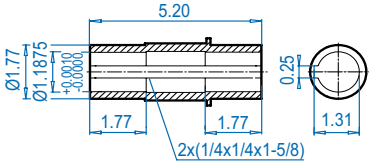


## SK 02050AZ**B** ⇨🕮 672

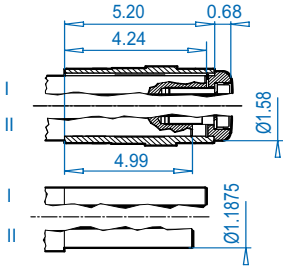


## SK 02050AZ**S** ⇨🕮 671

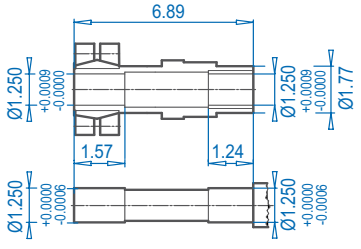


ALTERNATE SHAFTS SEE PAGES 669 - 671

**Motor dimensions**

| Standard efficiency | 63S/L | 71S/L | 80S/L | 90S/L | | | For Other Connection Possibilities please see ⇨🕮 666 & 667 |
|---|---|---|---|---|---|---|---|
| Energy efficiency | | | 80LH | 90SH/LH | | | |
| **AB** | 4.53 | 4.88 | 5.59 | 5.79 | | | 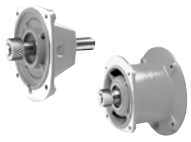 |
| **AB (BR)** | 4.84 | 5.24 | 5.63 | 5.83 | | | |
| **C1** | 14.80 | 16.38 | 17.36 | 18.98 | | | |
| **C1 (BR)** | 17.01 | 18.66 | 19.89 | 21.93 | | | |
| **FP** | 5.12 | 5.71 | 6.50 | 7.20 | | | |

**(BR)** denotes Brakemotor


Send Quote Requests to info@automatedpt.com
Call +1(800)985-6929 To Order or Order Online At Nordgearmotors.com

# SK 02050 + NEMA





## SK 02050

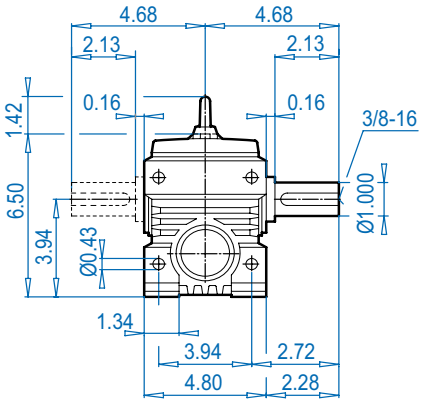


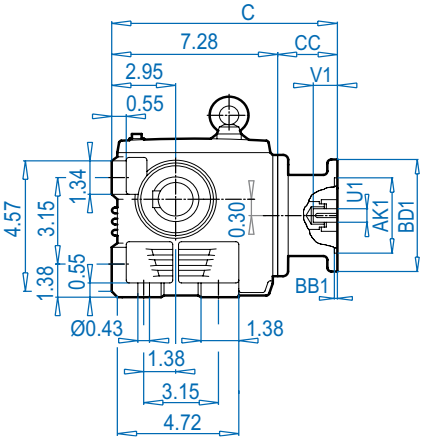


## NEMA Input

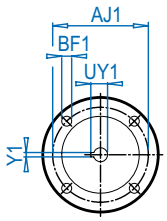


## SK 02050VF

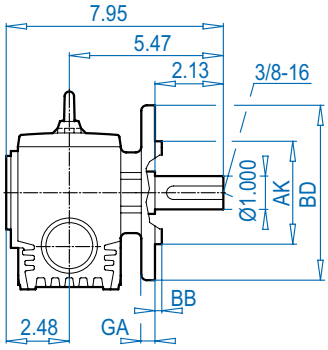


## SK 02050AF

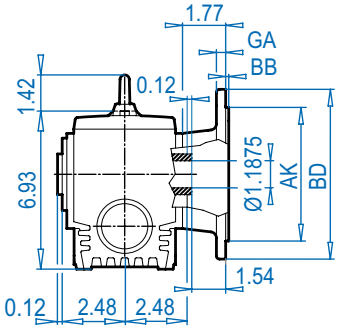


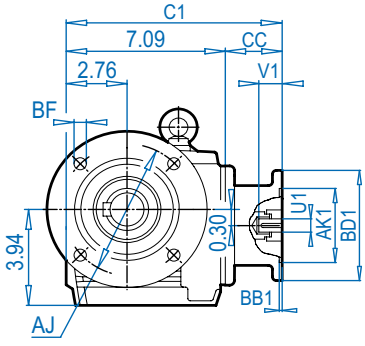


## SK 02050V

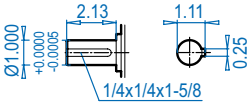


## SK 02050AF

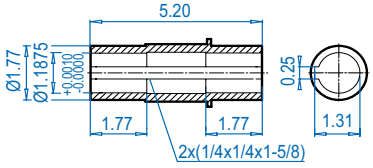


## SK 02050AFB ⇨🕮 672

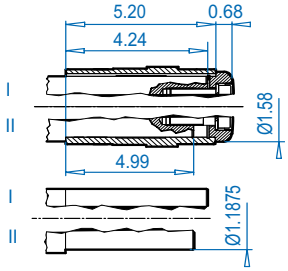


### Mounting flange

| Type | BD (mm) | AJ | AK | | BB | BF | GA |
|---|---|---|---|---|---|---|---|
| SK 02050VF | 6.30 (160) | 5.12 | 4.331 | + 0.0005<br>- 0.0004 | 0.16 | 0.35 | 0.39 |
| SK 02050AF | 7.87 (200) | 6.50 | 5.118 | + 0.0005<br>- 0.0004 | 0.14 | 0.43 | 0.47 |

### NEMA Dimensions

| Type | AJ1 | AK1 | BB1 | BD1 | BF1 | U1 | V1 | UY1 | Y1 | C | C1 | CC |
|---|---|---|---|---|---|---|---|---|---|---|---|---|
| 56C | 5.88 | 4.500 | 0.18 | 6.54 | 0.43 | 0.625 | 2.06 | 0.71 | 0.188 | 11.78 | 11.59 | 4.50 |
| 140TC | 5.88 | 4.500 | 0.18 | 6.54 | 0.43 | 0.875 | 2.12 | 0.96 | 0.188 | 11.78 | 11.59 | 4.50 |




Send Quote Requests to info@automatedpt.com
Call +1(800)985-6929 To Order or Order Online At Nordgearmotors.com

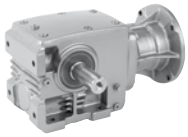


# SK 02050 + NEMA

## SK 02050AZ

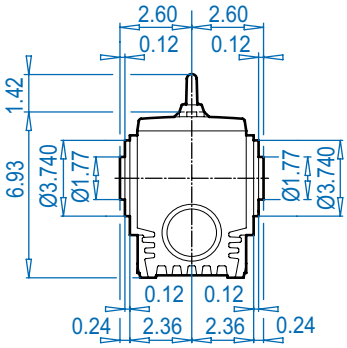


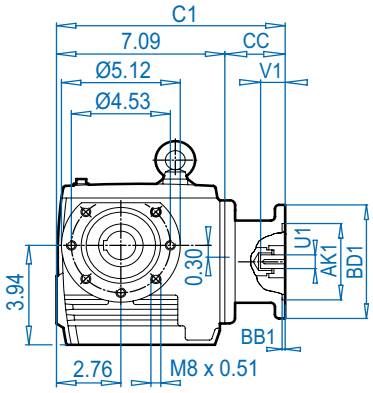


## NEMA Input

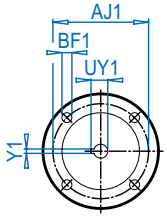


## SK 02050AZ**D**

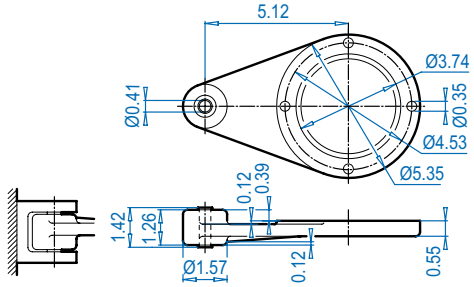


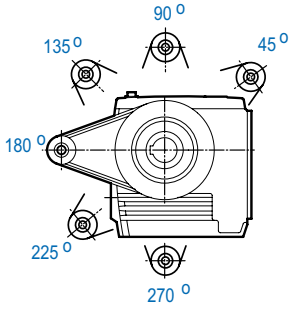


## SK 02050AZ**SH**

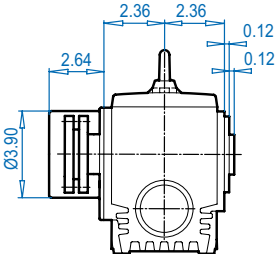


Dimensions in Inches
DIMENSIONS

ALTERNATE SHAFTS SEE PAGES 669 - 671

## SK 02050AZ

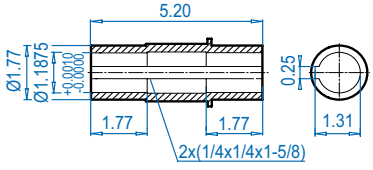


## SK 02050AZ**B** ⇨🕮 672

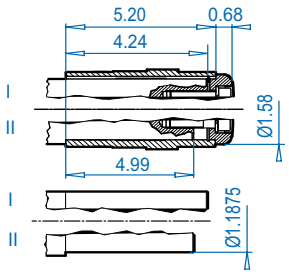


## SK 02050AZ**S** ⇨🕮 671

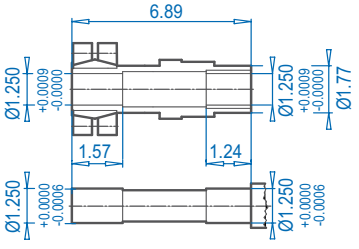


**NEMA Dimensions**

| Type | AJ1 | AK1 | BB1 | BD1 | BF1 | U1 | V1 | UY1 | Y1 | C1 | CC |
|---|---|---|---|---|---|---|---|---|---|---|---|
| **56C** | 5.88 | 4.500 | 0.18 | 6.54 | 0.43 | 0.625 | 2.06 | 0.71 | 0.188 | 11.59 | 4.50 |
| **140TC** | 5.88 | 4.500 | 0.18 | 6.54 | 0.43 | 0.875 | 2.12 | 0.96 | 0.188 | 11.59 | 4.50 |


Send Quote Requests to info@automatedpt.com
Call +1(800)985-6929 To Order or Order Online At Nordgearmotors.com

# SK 13050 + Motor

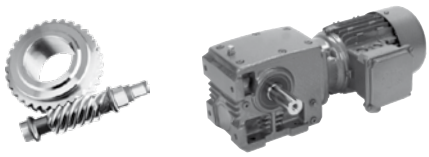

## SK 13050

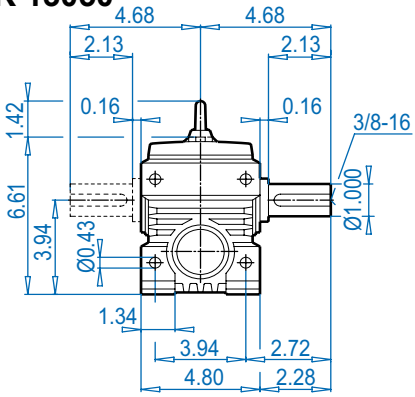


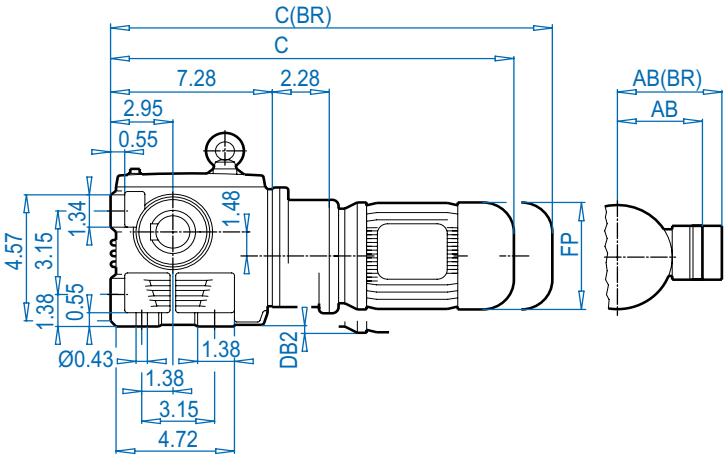


## SK 13050VF

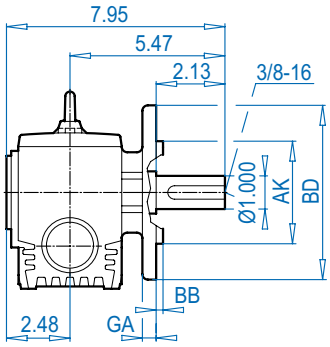


## SK 13050AF

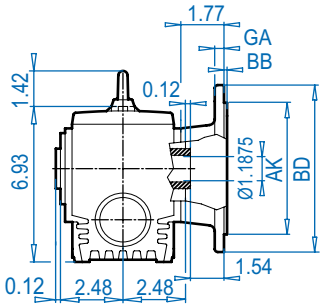


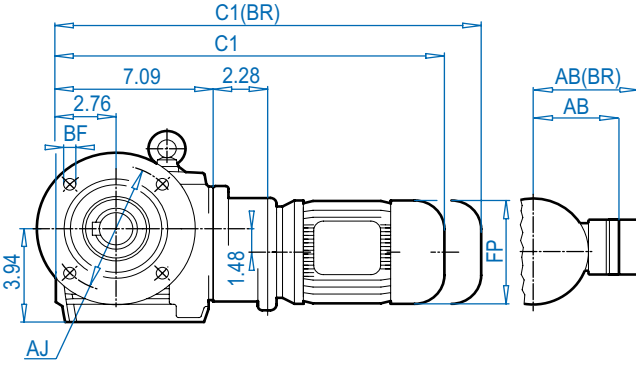


DIMENSIONS
Dimensions in Inches

## SK 13050V

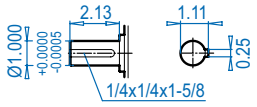


## SK 13050AF

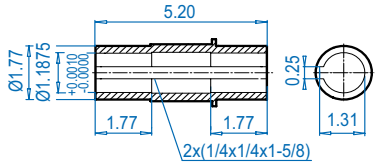


## SK 13050AFB ⇨📖 672

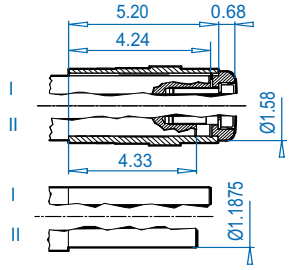


ALTERNATE SHAFTS SEE PAGES 669 - 671

### Mounting flange

| Type | BD (mm) | AJ | AK | BB | BF | GA |
|---|---|---|---|---|---|---|
| SK 13050VF | 6.30 (160) | 5.12 | 4.331 + 0.0005 - 0.0004 | 0.16 | 0.35 | 0.39 |
| SK 13050AF | 7.87 (200) | 6.50 | 5.118 + 0.0005 - 0.0004 | 0.14 | 0.43 | 0.47 |

### Motor dimensions

| Standard efficiency | 63S/L | 71S/L | | | | For Other Connection Possibilities please see ⇨📖 666 & 667 |
|---|---|---|---|---|---|---|
| Energy efficiency | | | | | | |
| AB | 4.53 | 4.88 | | | | |
| AB (BR) | 4.84 | 5.24 | | | | |
| C1 | 17.09 | 18.66 | | | | |
| C1 (BR) | 19.29 | 20.94 | | | | |
| C | 17.28 | 18.86 | | | | |
| C (BR) | 19.49 | 21.14 | | | | |
| FP | 5.12 | 5.71 | | | | |
| DB2 | 0.10 | 0.40 | | | | |



**(BR)** denotes Brakemotor


Send Quote Requests to info@automatedpt.com
Call +1(800)985-6929 To Order or Order Online At Nordgearmotors.com

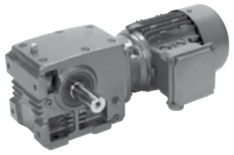

# SK 13050 + Motor

## SK 13050AZ

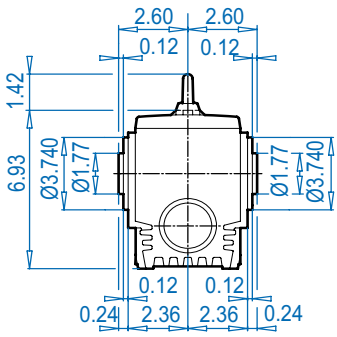


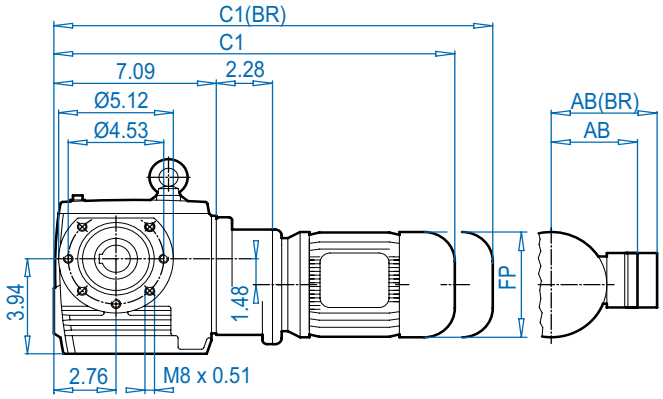


## SK 13050AZ**D**

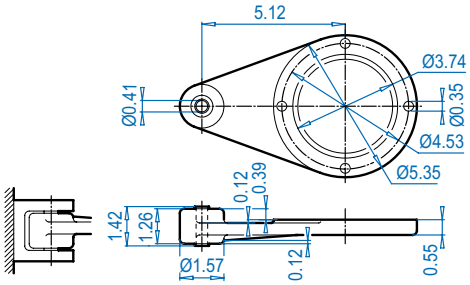


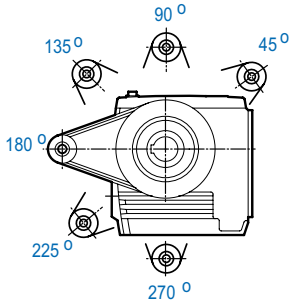


## SK 13050AZ**SH**

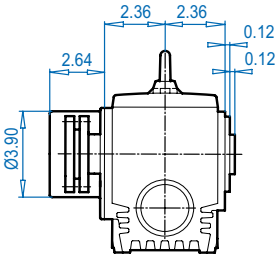


Dimensions in Inches
DIMENSIONS

## SK 13050AZ

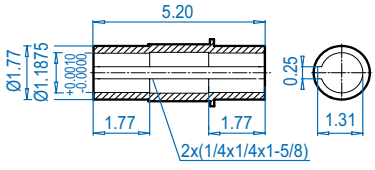


## SK 13050AZ**B** ⇨🕮 672

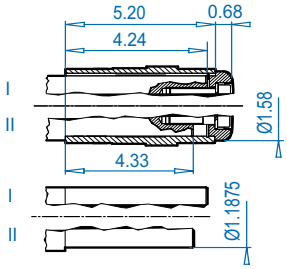


## SK 13050AZ**S** ⇨🕮 671

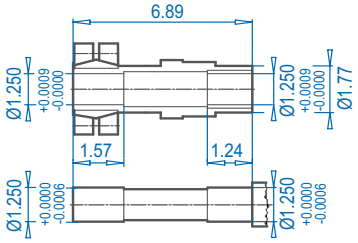


ALTERNATE SHAFTS SEE PAGES 669 - 671

### Motor dimensions

| Standard efficiency | 63S/L | 71S/L | | | | For Other Connection Possibilities please see ⇨🕮 666 & 667 |
|---|---|---|---|---|---|---|
| Energy efficiency | | | | | | |
| AB | 4.53 | 4.88 | | | | 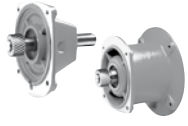 |
| AB (BR) | 4.84 | 5.24 | | | | |
| C1 | 17.09 | 18.66 | | | | |
| C1 (BR) | 19.29 | 20.94 | | | | |
| FP | 5.12 | 5.71 | | | | |

**(BR)** denotes Brakemotor


Send Quote Requests to info@automatedpt.com
Call +1(800)985-6929 To Order or Order Online At Nordgearmotors.com

# SK 13050 + NEMA





## SK 13050

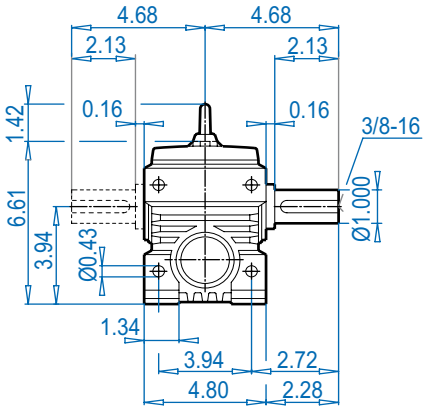


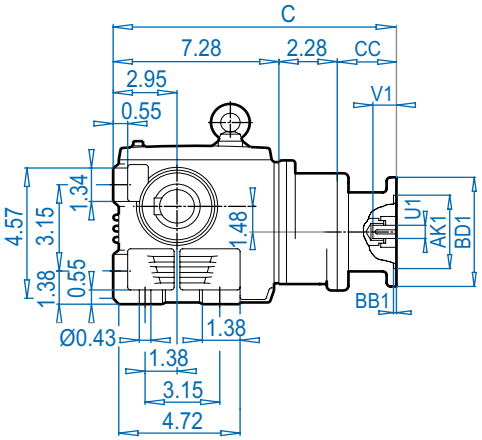


## NEMA Input

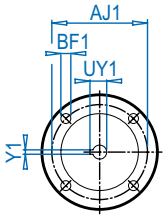


## SK 13050VF

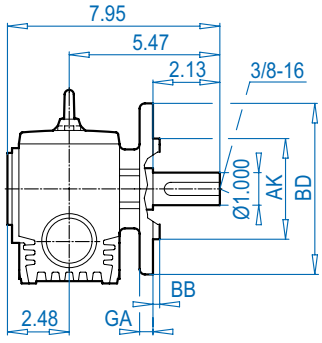


## SK 13050AF

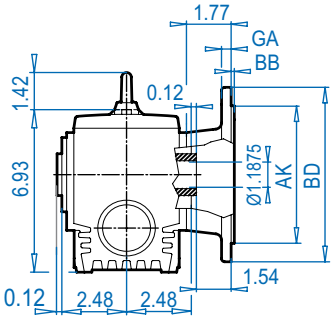


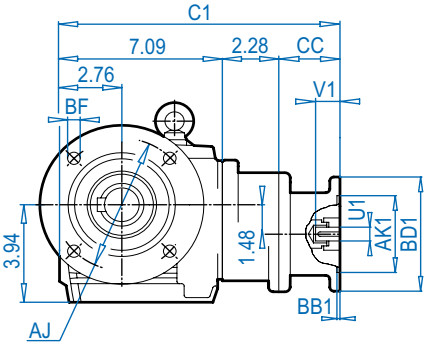


## SK 13050V

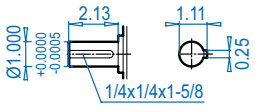


## SK 13050AF

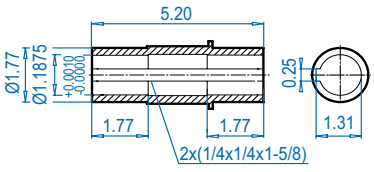


## SK 13050AFB ⇨🕮 672

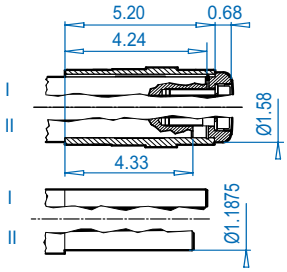


### Mounting flange

| Type | BD (mm) | AJ | AK | | BB | BF | GA |
|---|---|---|---|---|---|---|---|
| SK 13050VF | 6.30 (160) | 5.12 | 4.331 | + 0.0005<br>- 0.0004 | 0.16 | 0.35 | 0.39 |
| SK 13050AF | 7.87 (200) | 6.50 | 5.118 | + 0.0005<br>- 0.0004 | 0.14 | 0.43 | 0.47 |

### NEMA Dimensions

| Type | AJ1 | AK1 | BB1 | BD1 | BF1 | U1 | V1 | UY1 | Y1 | C | C1 | CC |
|---|---|---|---|---|---|---|---|---|---|---|---|---|
| 56C | 5.88 | 4.500 | 0.18 | 6.54 | 0.43 | 0.625 | 2.06 | 0.71 | 0.188 | 14.06 | 13.87 | 4.50 |




Send Quote Requests to info@automatedpt.com
Call +1(800)985-6929 To Order or Order Online At Nordgearmotors.com

DRIVESYSTEMS

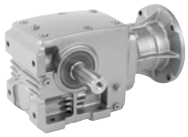



# SK 13050 + NEMA

## SK 13050AZ

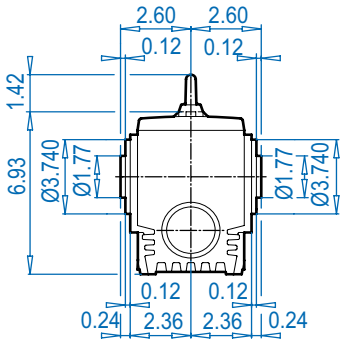


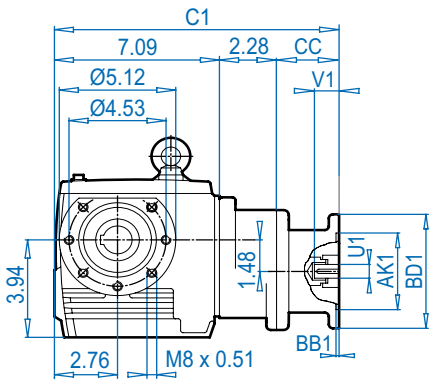


## NEMA Input

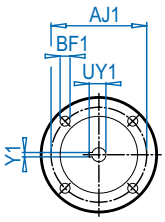


## SK 13050AZ**D**

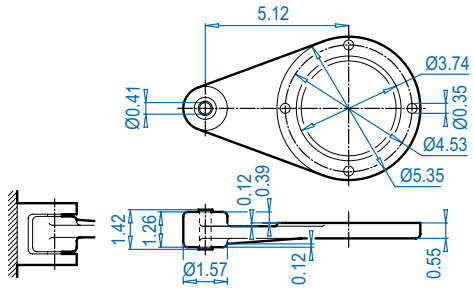


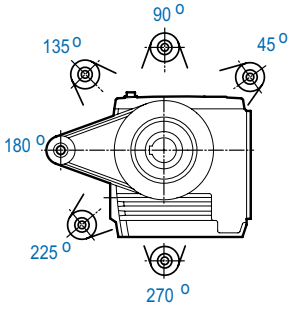


## SK 13050AZ**SH**

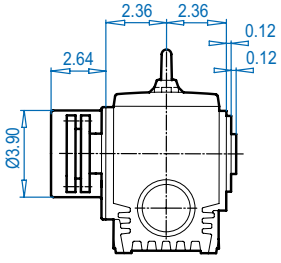


Dimensions in Inches
DIMENSIONS

ALTERNATE SHAFTS SEE PAGES 669 - 671

## SK 13050AZ

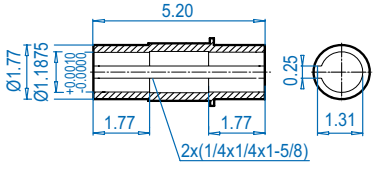


## SK 13050AZ**B** ⇨🕮 672

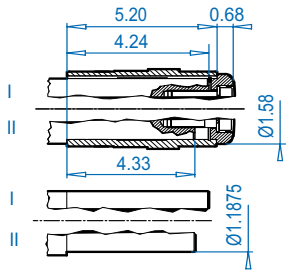


## SK 13050AZ**S** ⇨🕮 671

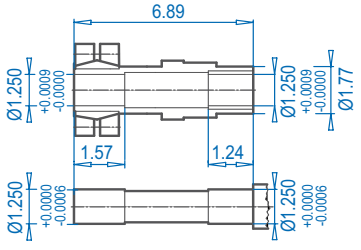


**NEMA Dimensions**

| Type | AJ1 | AK1 | BB1 | BD1 | BF1 | U1 | V1 | UY1 | Y1 | C1 | CC |
|---|---|---|---|---|---|---|---|---|---|---|---|
| **56C** | 5.88 | 4.500 | 0.18 | 6.54 | 0.43 | 0.625 | 2.06 | 0.71 | 0.188 | 13.87 | 4.50 |



Send Quote Requests to info@automatedpt.com
Call +1(800)985-6929 To Order or Order Online At Nordgearmotors.com

# SK 12063 + Motor



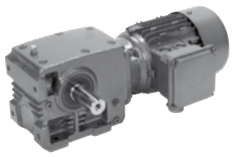

## SK 12063

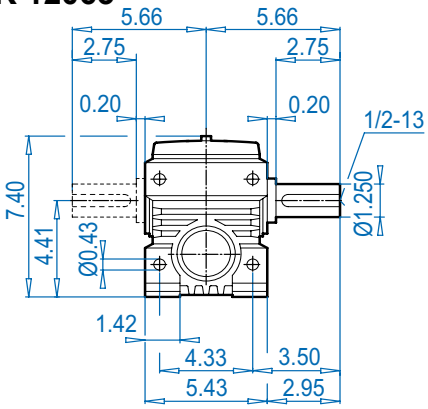


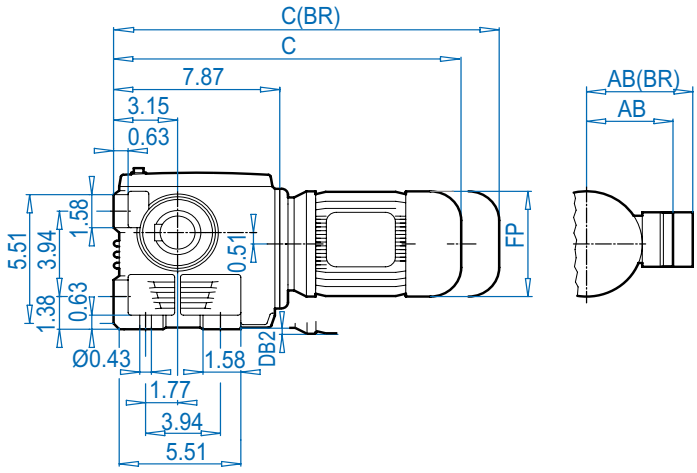


## SK 12063VF

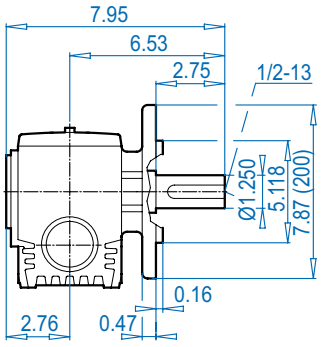


## SK 12063AF

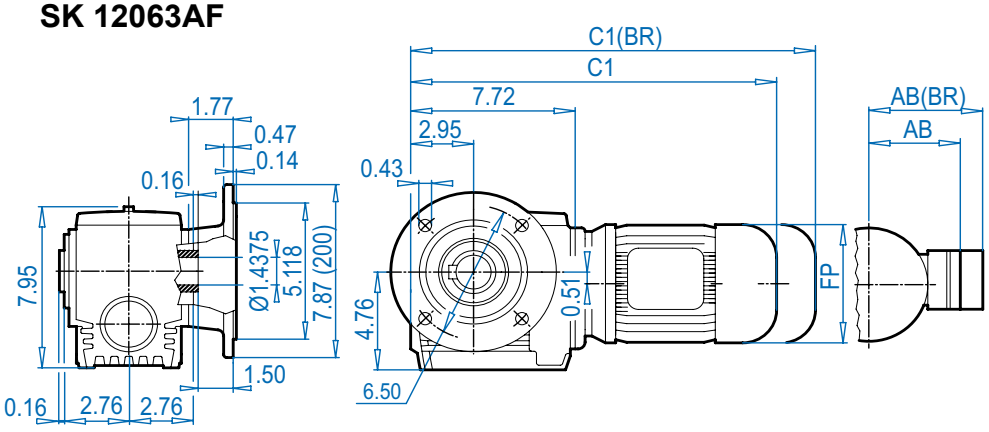


## SK 12063V

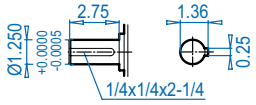


## SK 12063AF

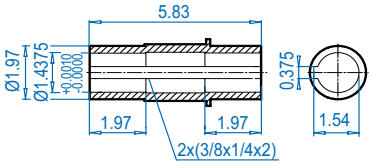


## SK 12063AFB ⇨🕮 672

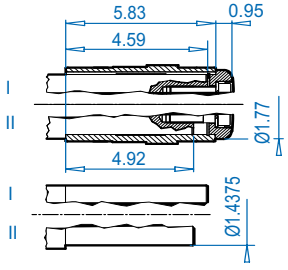


**Motor dimensions**

| Standard efficiency | 63S/L | 71S/L | 80S/L | 90S/L | 100L | | | For Other Connection Possibilities please see ⇨🕮 666 & 667 |
|---|---|---|---|---|---|---|---|---|
| Energy efficiency | | | 80LH | 90SH/LH | 100LH | | | |
| AB | 4.53 | 4.88 | 5.59 | 5.79 | 6.65 | | | |
| AB (BR) | 4.84 | 5.24 | 5.63 | 5.83 | 6.26 | | | |
| C1 | 15.43 | 17.01 | 17.99 | 19.61 | 20.79 | | | |
| C1 (BR) | 17.64 | 19.29 | 20.51 | 22.56 | 24.37 | | | |
| C | 15.59 | 17.17 | 18.15 | 19.76 | 20.94 | | | |
| C (BR) | 17.79 | 19.45 | 20.67 | 22.72 | 24.53 | | | |
| FP | 5.12 | 5.71 | 6.50 | 7.20 | 7.91 | | | |
| DB2 | - | - | - | - | 0.10 | | | |

**(BR)** denotes Brakemotor

DIMENSIONS
Dimensions in Inches
ALTERNATE SHAFTS SEE PAGES 669 - 671


Send Quote Requests to info@automatedpt.com
Call +1(800)985-6929 To Order or Order Online At Nordgearmotors.com

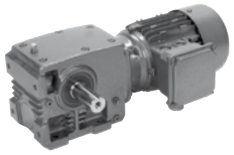

# SK 12063 + Motor

## SK 12063AZ

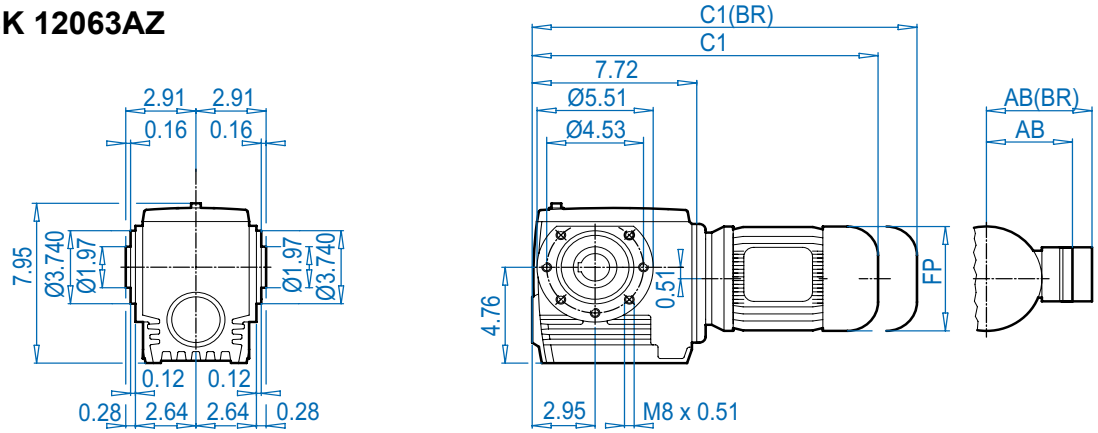


## SK 12063AZ**D**

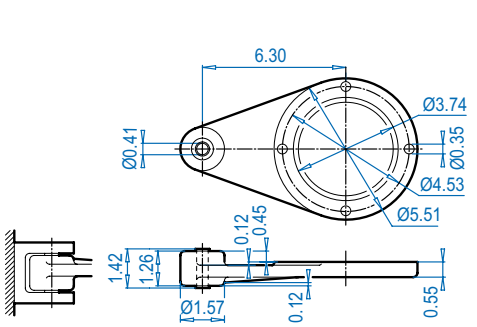


## SK 12063AZ**SH**

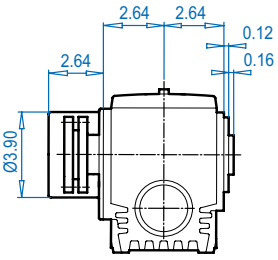


Dimensions in Inches
DIMENSIONS

## SK 12063AZ

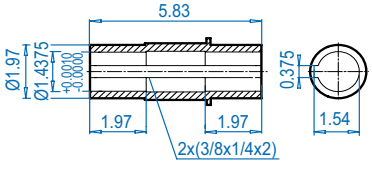


## SK 12063AZ**B** ⇨🕮 672

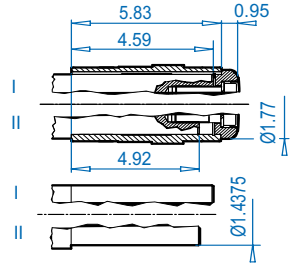


## SK 12063AZ**S** ⇨🕮 671

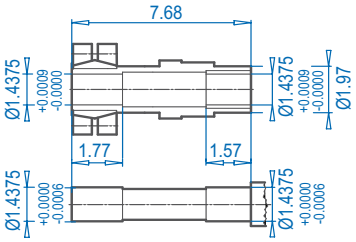


ALTERNATE SHAFTS SEE PAGES 669 - 671

**Motor dimensions**

| Standard efficiency | 63S/L | 71S/L | 80S/L | 90S/L | 100L | | | For Other Connection Possibilities please see ⇨🕮 666 & 667 |
|---|---|---|---|---|---|---|---|---|
| Energy efficiency | | | 80LH | 90SH/LH | 100LH | | | |
| AB | 4.53 | 4.88 | 5.59 | 5.79 | 6.65 | | | |
| AB (BR) | 4.84 | 5.24 | 5.63 | 5.83 | 6.26 | | | |
| C1 | 15.43 | 17.01 | 17.99 | 19.61 | 20.79 | | | |
| C1 (BR) | 17.64 | 19.29 | 20.51 | 22.56 | 24.37 | | | |
| FP | 5.12 | 5.71 | 6.50 | 7.20 | 7.91 | | | |

**(BR)** denotes Brakemotor


Send Quote Requests to info@automatedpt.com
Call +1(800)985-6929 To Order or Order Online At Nordgearmotors.com

# SK 12063 + NEMA

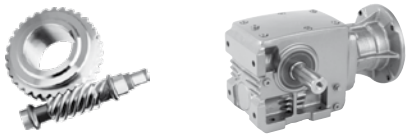

NORD DRIVESYSTEMS

## SK 12063

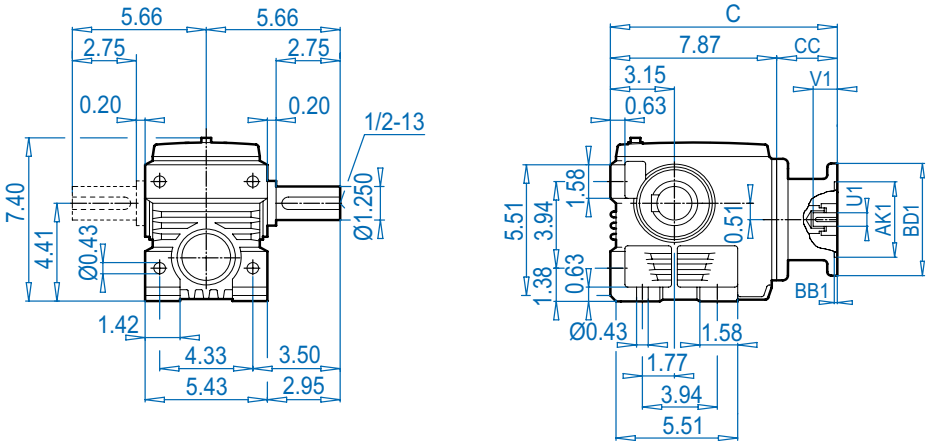


## NEMA Input

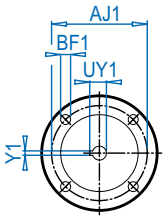


## SK 12063VF

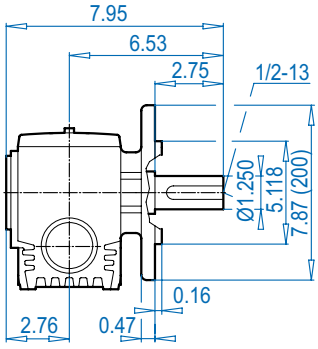


## SK 12063AF

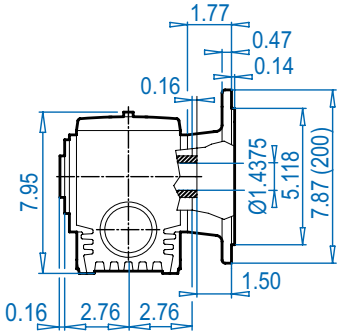


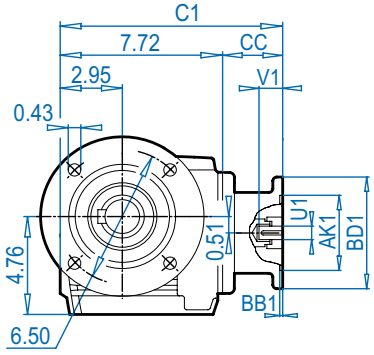


## SK 12063V

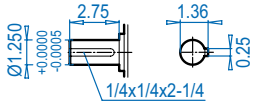


## SK 12063AF

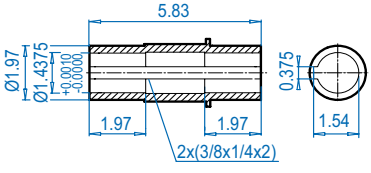


## SK 12063AFB ⇨📖 672

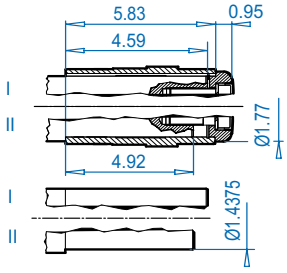


### NEMA Dimensions

| Type | AJ1 | AK1 | BB1 | BD1 | BF1 | U1 | V1 | UY1 | Y1 | C | C1 | CC |
|---|---|---|---|---|---|---|---|---|---|---|---|---|
| **56C** | 5.88 | 4.500 | 0.18 | 6.54 | 0.43 | 0.625 | 2.06 | 0.71 | 0.188 | 12.37 | 12.22 | 4.50 |
| **140TC** | 5.88 | 4.500 | 0.18 | 6.54 | 0.43 | 0.875 | 2.12 | 0.96 | 0.188 | 12.37 | 12.22 | 4.50 |
| **180TC** | 7.25 | 8.500 | 0.23 | 9.17 | 0.59 | 1.125 | 2.62 | 1.24 | 0.250 | 13.52 | 13.37 | 5.65 |

DIMENSIONS
Dimensions in Inches
ALTERNATE SHAFTS SEE PAGES 669 - 671


Send Quote Requests to info@automatedpt.com
Call +1(800)985-6929 To Order or Order Online At Nordgearmotors.com

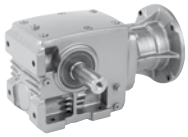


# SK 12063 + NEMA

## SK 12063AZ

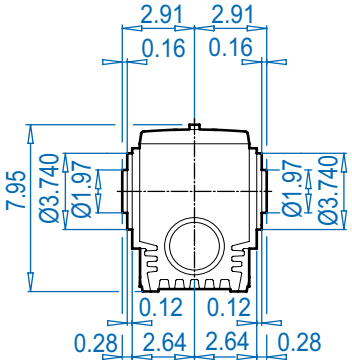


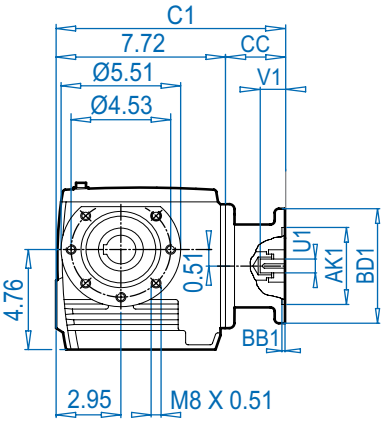


## NEMA Input

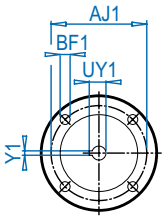


## SK 12063AZ**D**

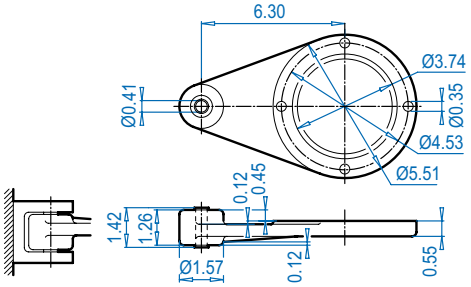


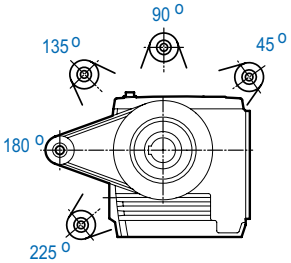


## SK 12063AZ**SH**

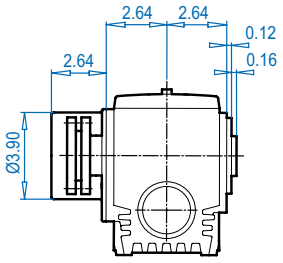


DIMENSIONS
Dimensions in Inches

## SK 12063AZ

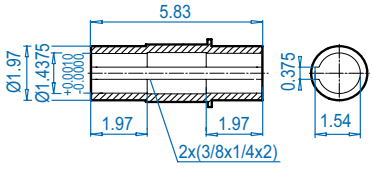


## SK 12063AZ**B** ⇨📖 672

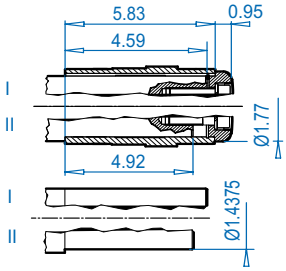


## SK 12063AZ**S** ⇨📖 671

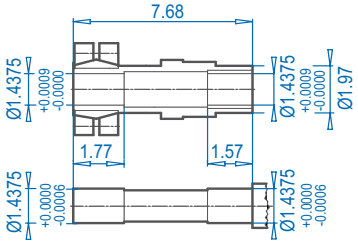


ALTERNATE SHAFTS SEE PAGES 669 - 671

**NEMA Dimensions**

| Type | AJ1 | AK1 | BB1 | BD1 | BF1 | U1 | V1 | UY1 | Y1 | C1 | CC |
|---|---|---|---|---|---|---|---|---|---|---|---|
| **56C** | 5.88 | 4.500 | 0.18 | 6.54 | 0.43 | 0.625 | 2.06 | 0.71 | 0.188 | 12.22 | 4.50 |
| **140TC** | 5.88 | 4.500 | 0.18 | 6.54 | 0.43 | 0.875 | 2.12 | 0.96 | 0.188 | 12.22 | 4.50 |
| **180TC** | 7.25 | 8.500 | 0.23 | 9.17 | 0.59 | 1.125 | 2.62 | 1.24 | 0.250 | 13.37 | 5.65 |


Send Quote Requests to info@automatedpt.com
Call +1(800)985-6929 To Order or Order Online At Nordgearmotors.com

# SK 13063 + Motor



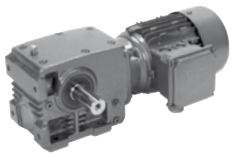

## SK 13063

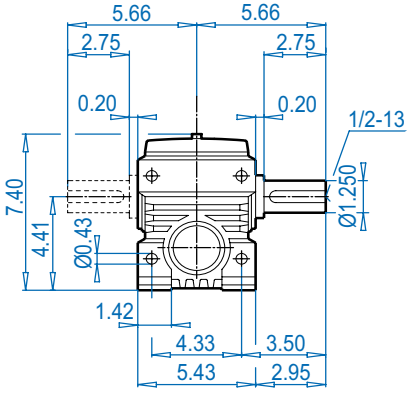


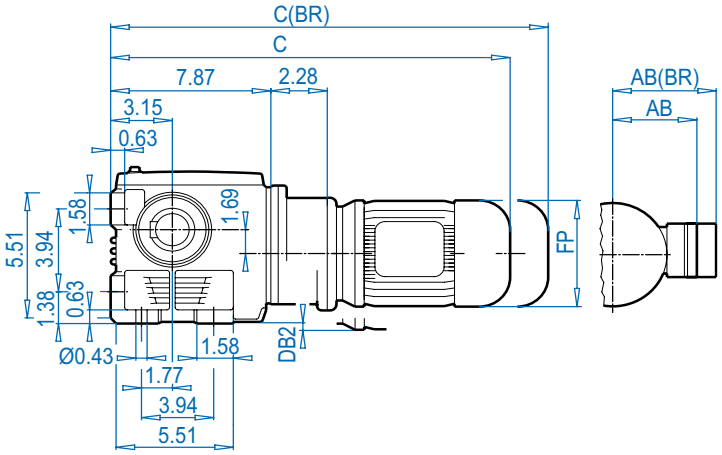


## SK 13063VF

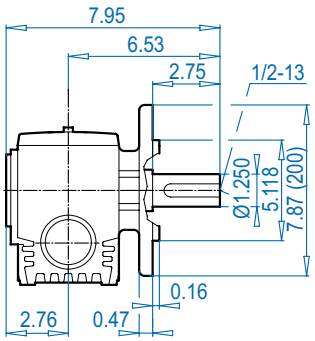


## SK 13063AF

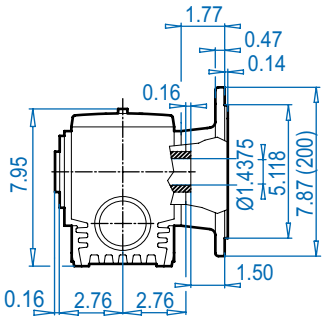


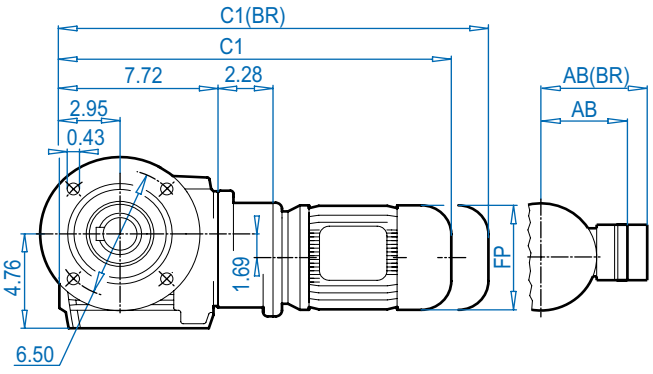


## SK 13063V

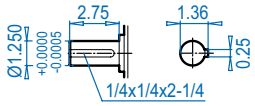


## SK 13063AF

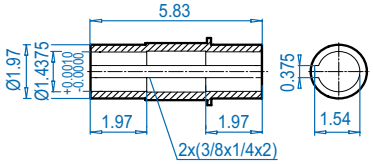


## SK 13063AFB ⇨📖 672

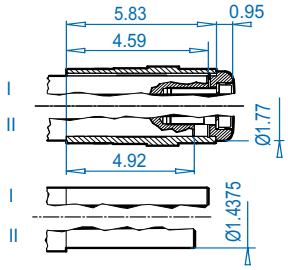


DIMENSIONS — Dimensions in Inches

ALTERNATE SHAFTS SEE PAGES 669 - 671

### Motor dimensions

| Standard efficiency | 63S/L | 71S/L | | | | | For Other Connection Possibilities please see ⇨📖 666 & 667 |
|---|---|---|---|---|---|---|---|
| Energy efficiency | | | | | | | |
| AB | 4.53 | 4.88 | | | | | |
| AB (BR) | 4.84 | 5.24 | | | | | |
| C1 | 17.72 | 19.29 | | | | | |
| C1 (BR) | 19.92 | 21.57 | | | | | |
| C | 17.87 | 19.45 | | | | | |
| C (BR) | 20.08 | 21.73 | | | | | |
| FP | 5.12 | 5.71 | | | | | |
| DB2 | - | 0.14 | | | | | |



**(BR)** denotes Brakemotor


Send Quote Requests to info@automatedpt.com
Call +1(800)985-6929 To Order or Order Online At Nordgearmotors.com

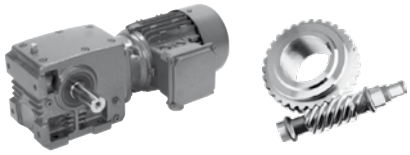

# SK 13063 + Motor

## SK 13063AZ

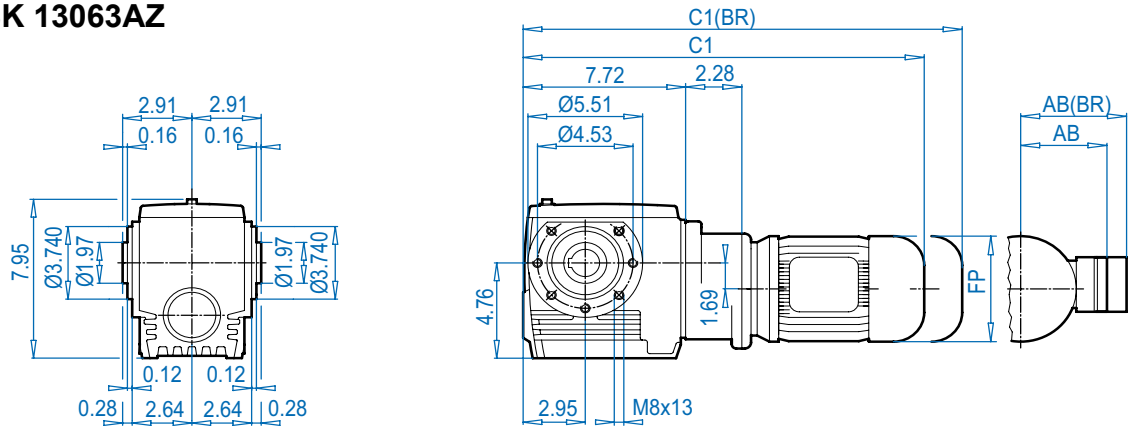


## SK 13063AZ**D**

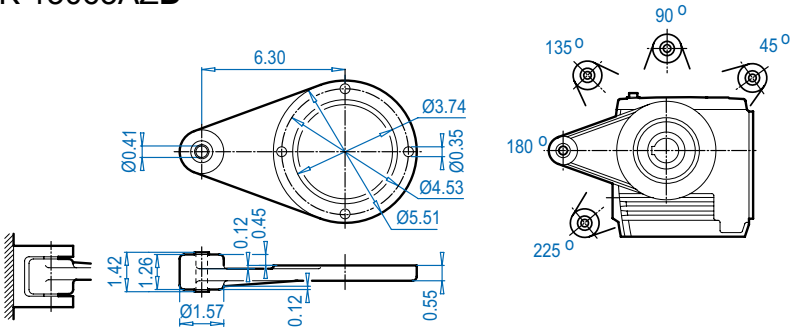


## SK 13063AZ**SH**

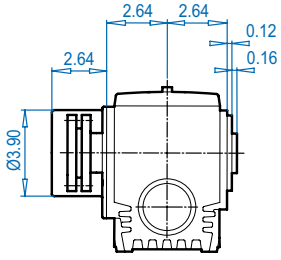


Dimensions in Inches
DIMENSIONS

## SK 13063AZ

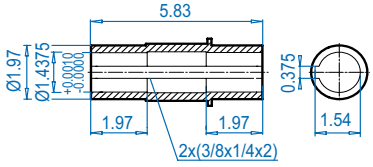


## SK 13063AZ**B** ⇨📖 672

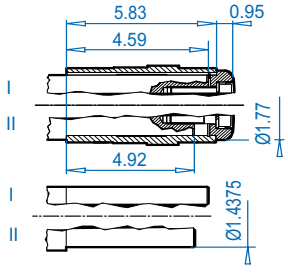


## SK 13063AZ**S** ⇨📖 671

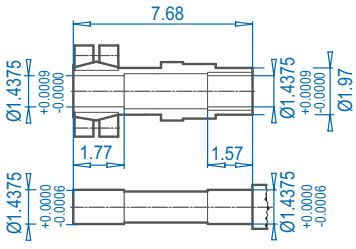


ALTERNATE SHAFTS SEE PAGES 669 - 671

**Motor dimensions**

| Standard efficiency | 63S/L | 71S/L | | | | | For Other Connection Possibilities please see ⇨📖 666 & 667 |
|---|---|---|---|---|---|---|---|
| Energy efficiency | | | | | | | |
| AB | 4.53 | 4.88 | | | | | 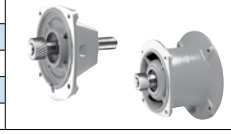 |
| AB (BR) | 4.84 | 5.24 | | | | | |
| C1 | 17.72 | 19.29 | | | | | |
| C1 (BR) | 19.92 | 21.57 | | | | | |
| FP | 5.12 | 5.71 | | | | | |

**(BR)** denotes Brakemotor


Send Quote Requests to info@automatedpt.com
Call +1(800)985-6929 To Order or Order Online At Nordgearmotors.com

# SK 13063 + NEMA





## SK 13063

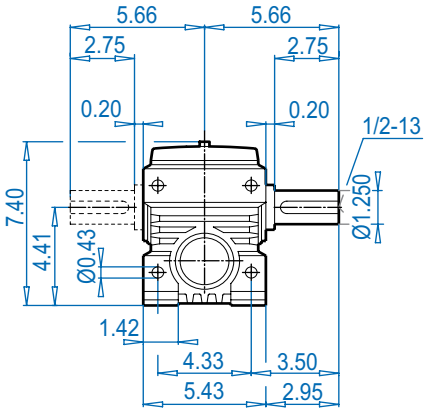


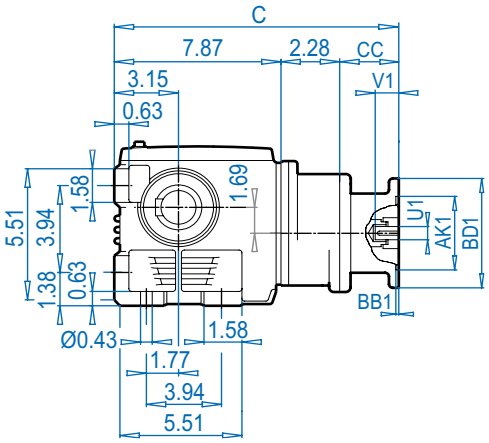


## NEMA Input

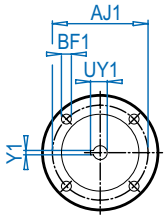


## SK 13063VF

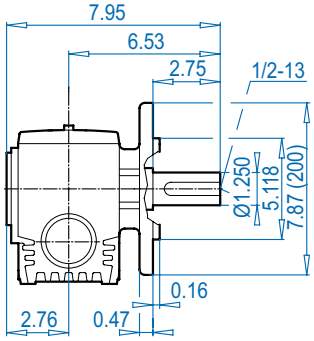


## SK 13063AF

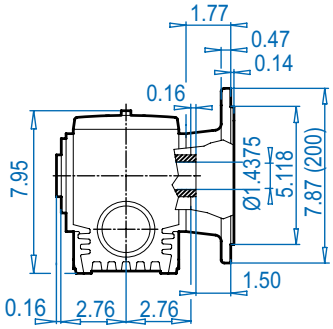


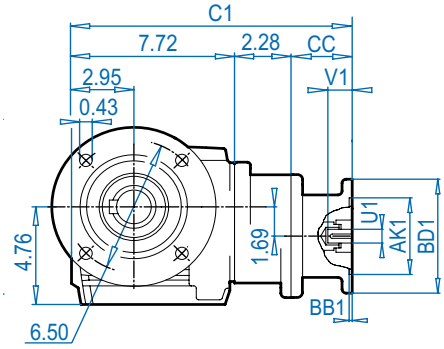


## SK 13063V

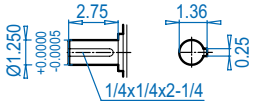


## SK 13063AF

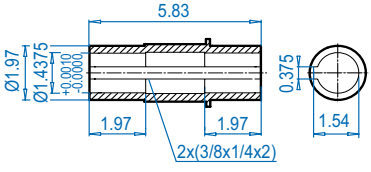


## SK 13063AFB ⇨🕮 672

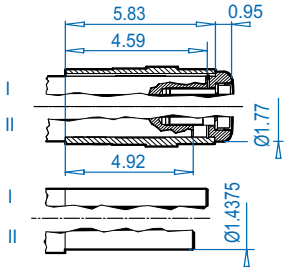


### NEMA Dimensions

| Type | AJ1 | AK1 | BB1 | BD1 | BF1 | U1 | V1 | UY1 | Y1 | C | C1 | CC |
|---|---|---|---|---|---|---|---|---|---|---|---|---|
| **56C** | 5.88 | 4.500 | 0.18 | 6.54 | 0.43 | 0.625 | 2.06 | 0.71 | 0.188 | 14.65 | 15.50 | 4.50 |

DIMENSIONS
Dimensions in Inches
ALTERNATE SHAFTS SEE PAGES 669 - 671


Send Quote Requests to info@automatedpt.com
Call +1(800)985-6929 To Order or Order Online At Nordgearmotors.com

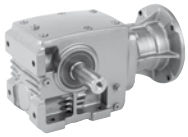


# SK 13063 + NEMA

## SK 13063AZ

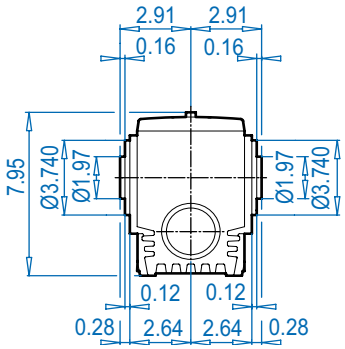


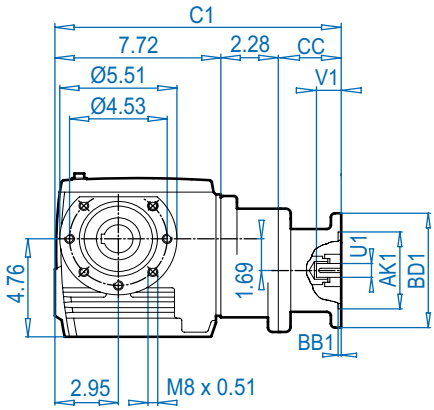


## NEMA Input

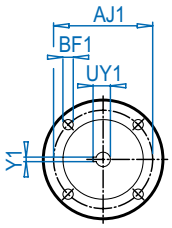


## SK 13063AZ**D**

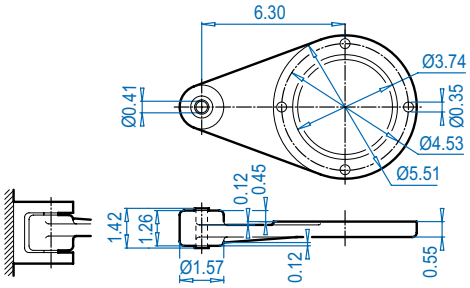


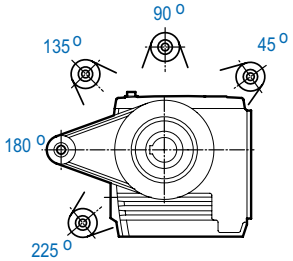


## SK 13063AZ**SH**

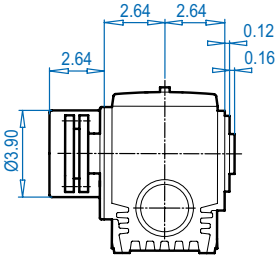


Dimensions in Inches
DIMENSIONS

ALTERNATE SHAFTS SEE PAGES 669 - 671

## SK 13063AZ

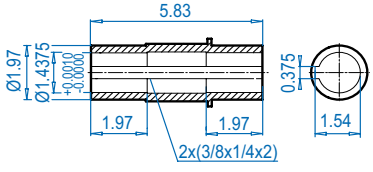


## SK 13063AZ**B** ⇨🕮 672

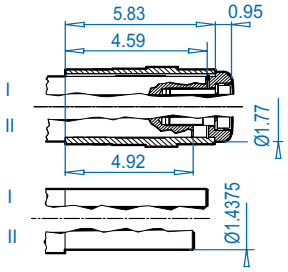


## SK 13063AZ**S** ⇨🕮 671

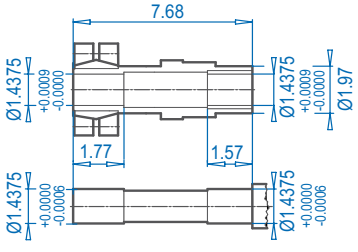


**NEMA Dimensions**

| Type | AJ1 | AK1 | BB1 | BD1 | BF1 | U1 | V1 | UY1 | Y1 | C1 | CC |
|---|---|---|---|---|---|---|---|---|---|---|---|
| **56C** | 5.88 | 4.500 | 0.18 | 6.54 | 0.43 | 0.625 | 2.06 | 0.71 | 0.188 | 15.50 | 4.50 |


Send Quote Requests to info@automatedpt.com
Call +1(800)985-6929 To Order or Order Online At Nordgearmotors.com

# SK 12080 + Motor



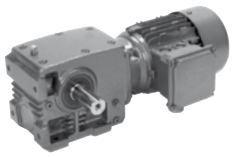

## SK 12080

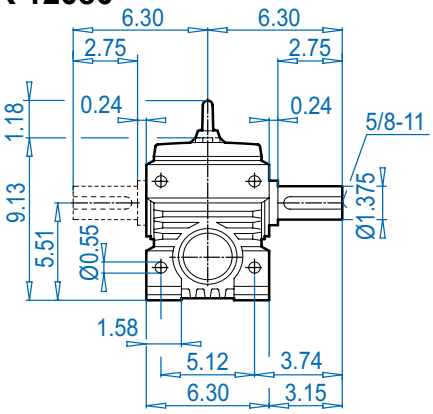


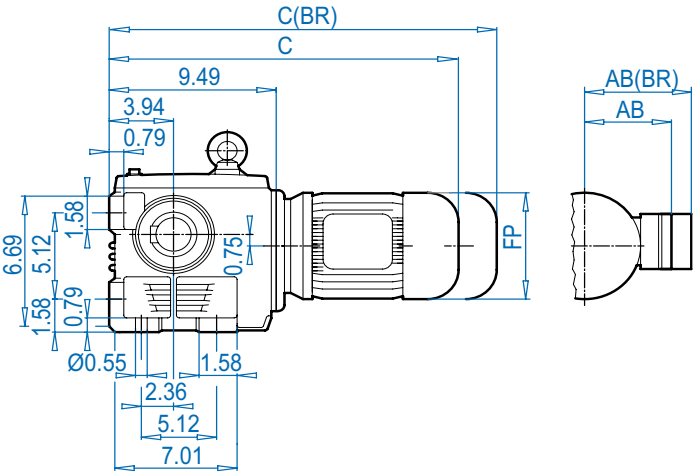


## SK 12080VF

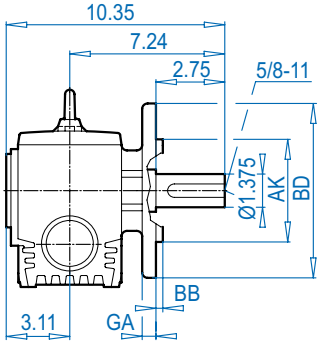


## SK 12080AF

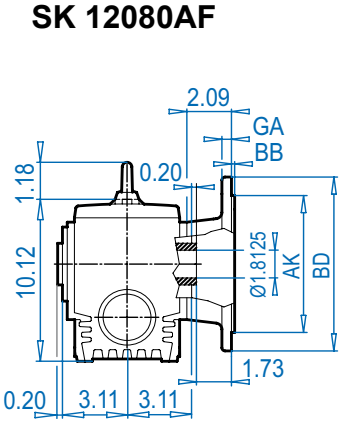


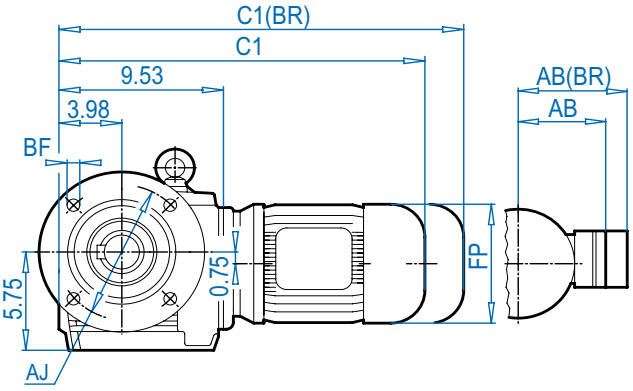


## SK 12080V

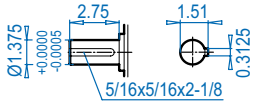


## SK 12080AF

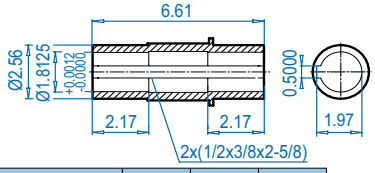


## SK 12080AFB ⇨🕮 672

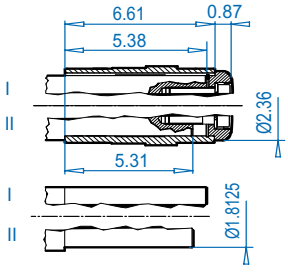


### Mounting flange

| Type | BD (mm) | AJ | AK | BB | BF | GA |
|---|---|---|---|---|---|---|
| SK 12080VF | 7.87 (200) | 6.50 | 5.118 + 0.0005 - 0.0004 | 0.16 | 0.43 | 0.47 |
| SK 12080AF | 9.84 (250) | 8.46 | 7.087 + 0.0006 - 0.0005 | 0.16 | 0.55 | 0.59 |
| SK 12080AF | 11.81 (300) | 10.43 | 9.055 + 0.0000 - 0.0014 | 0.16 | 0.55 | 0.79 |

### Motor dimensions

| Standard efficiency | 63S/L | 71S/L | 80S/L | 90S/L | 100L | | For Other Connection Possibilities please see ⇨🕮 666 & 667 |
|---|---|---|---|---|---|---|---|
| Energy efficiency | | | 80LH | 90SH/LH | 100LH | 112MH | |
| AB | 4.53 | 4.88 | 5.59 | 5.79 | 6.65 | 7.05 |  |
| AB (BR) | 4.84 | 5.24 | 5.63 | 5.83 | 6.26 | 6.69 | |
| C1 | 17.25 | 18.82 | 19.80 | 21.42 | 22.60 | 23.50 | |
| C1 (BR) | 19.45 | 21.10 | 22.32 | 24.37 | 26.18 | 27.17 | |
| C | 17.21 | 18.78 | 19.76 | 21.38 | 22.56 | 23.46 | |
| C (BR) | 19.41 | 21.06 | 22.28 | 24.33 | 26.14 | 27.13 | |
| FP | 5.12 | 5.71 | 6.50 | 7.20 | 7.91 | 8.98 | |

**(BR)** denotes Brakemotor

DIMENSIONS
Dimensions in Inches
ALTERNATE SHAFTS SEE PAGES 669 - 671

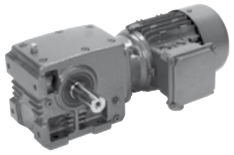

# SK 12080 + Motor

## SK 12080AZ

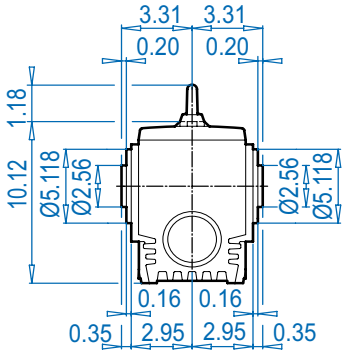


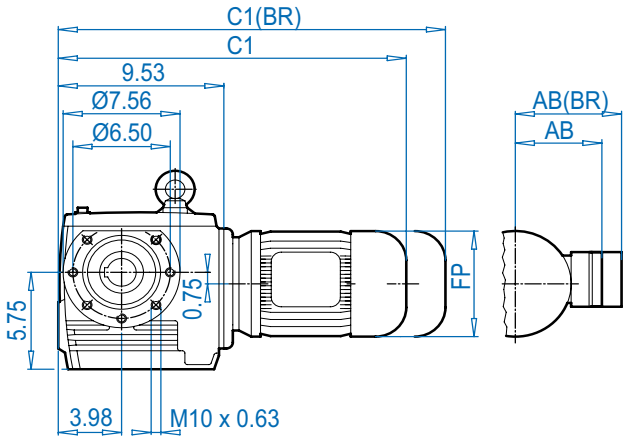


## SK 12080AZ**D**

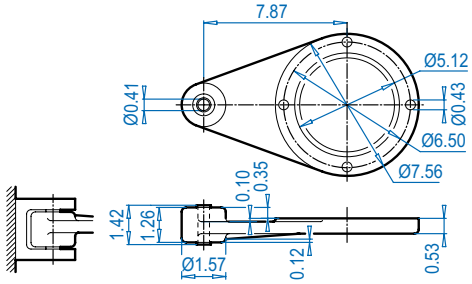


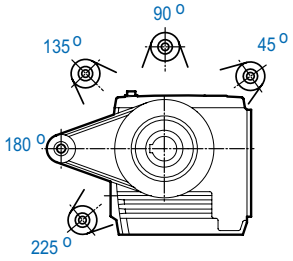


## SK 12080AZ**SH**

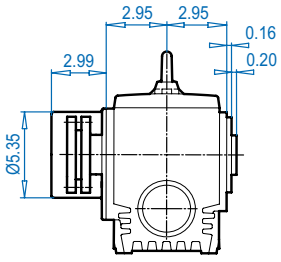


Dimensions in Inches
DIMENSIONS

## SK 12080AZ

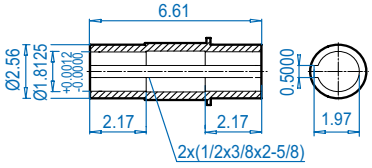


## SK 12080AZ**B** ⇨🕮 672

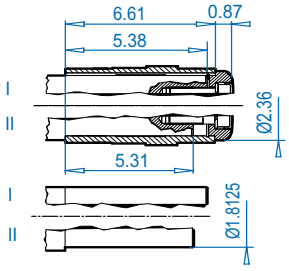


## SK 12080AZ**S** ⇨🕮 671

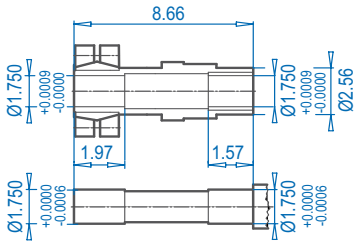


ALTERNATE SHAFTS SEE PAGES 669 - 671

**Motor dimensions**

| Standard efficiency | 63S/L | 71S/L | 80S/L | 90S/L | 100L | | For Other Connection Possibilities please see ⇨🕮 666 & 667 |
|---|---|---|---|---|---|---|---|
| Energy efficiency | | | 80LH | 90SH/LH | 100LH | 112MH | |
| AB | 4.53 | 4.88 | 5.59 | 5.79 | 6.65 | 7.05 | 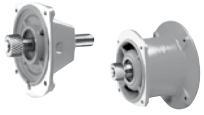 |
| AB (BR) | 4.84 | 5.24 | 5.63 | 5.83 | 6.26 | 6.69 | |
| C1 | 17.25 | 18.82 | 19.80 | 21.42 | 22.60 | 23.50 | |
| C1 (BR) | 19.45 | 21.10 | 22.32 | 24.37 | 26.18 | 27.17 | |
| FP | 5.12 | 5.71 | 6.50 | 7.20 | 7.91 | 8.98 | |

**(BR)** denotes Brakemotor


Send Quote Requests to info@automatedpt.com
Call +1(800)985-6929 To Order or Order Online At Nordgearmotors.com

# SK 12080 + NEMA





## SK 12080

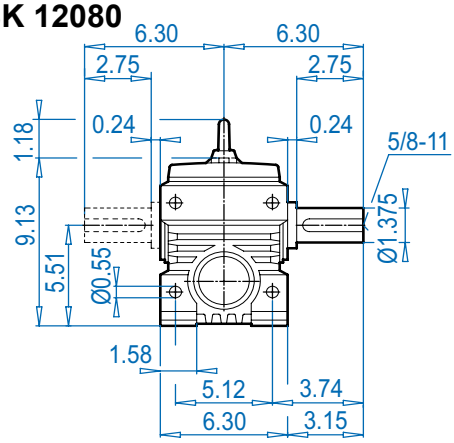


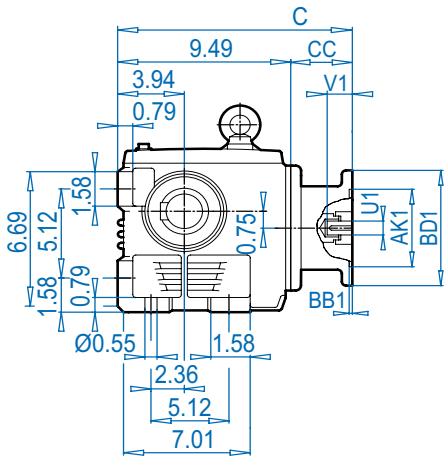


## NEMA Input

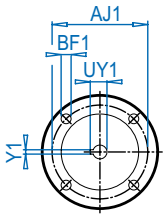


## SK 12080VF

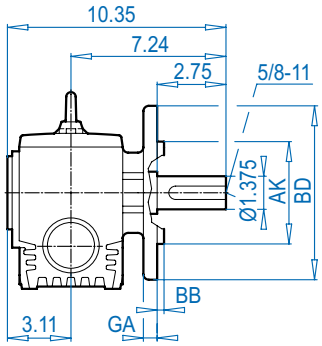


## SK 12080AF

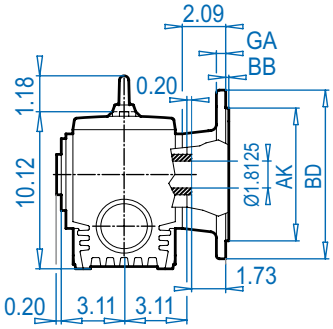


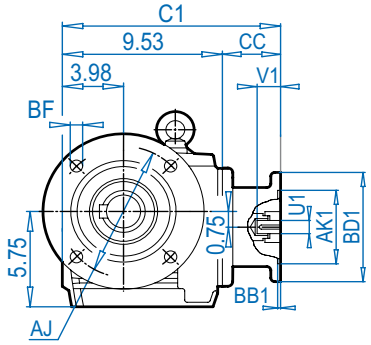


## SK 12080V

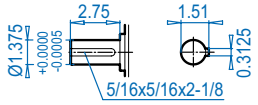


## SK 12080AF

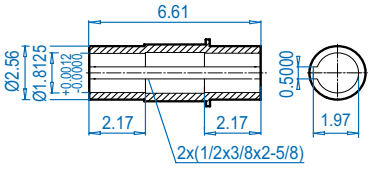


## SK 12080AFB

⇨🕮 672

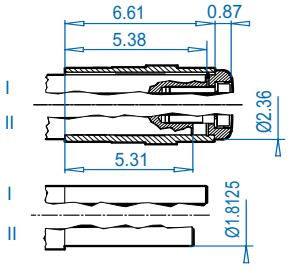


### Mounting flange

| Type | BD (mm) | AJ | AK | BB | BF | GA |
|---|---|---|---|---|---|---|
| SK 12080VF | 7.87 (200) | 6.50 | 5.118 +0.0005 -0.0004 | 0.16 | 0.43 | 0.47 |
| SK 12080AF | 9.84 (250) | 8.46 | 7.087 +0.0006 -0.0005 | 0.16 | 0.55 | 0.59 |
| SK 12080AF | 11.81 (300) | 10.43 | 9.055 +0.0000 -0.0014 | 0.16 | 0.55 | 0.79 |

### NEMA Dimensions

| Type | AJ1 | AK1 | BB1 | BD1 | BF1 | U1 | V1 | UY1 | Y1 | C | C1 | CC |
|---|---|---|---|---|---|---|---|---|---|---|---|---|
| 56C | 5.88 | 4.500 | 0.18 | 6.54 | 0.43 | 0.625 | 2.06 | 0.71 | 0.188 | 13.99 | 14.03 | 4.50 |
| 140TC | 5.88 | 4.500 | 0.18 | 6.54 | 0.43 | 0.875 | 2.12 | 0.96 | 0.188 | 13.99 | 14.03 | 4.50 |
| 180TC | 7.25 | 8.500 | 0.23 | 9.17 | 0.59 | 1.125 | 2.62 | 1.24 | 0.250 | 15.14 | 15.18 | 5.65 |




Send Quote Requests to info@automatedpt.com
Call +1(800)985-6929 To Order or Order Online At Nordgearmotors.com

DRIVESYSTEMS

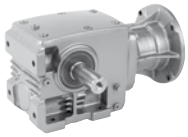



# SK 12080 + NEMA

## SK 12080AZ

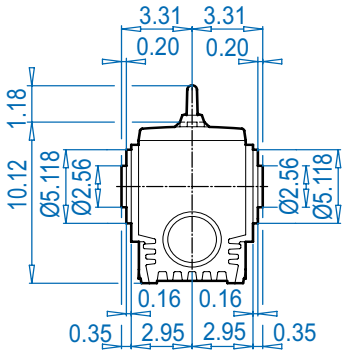


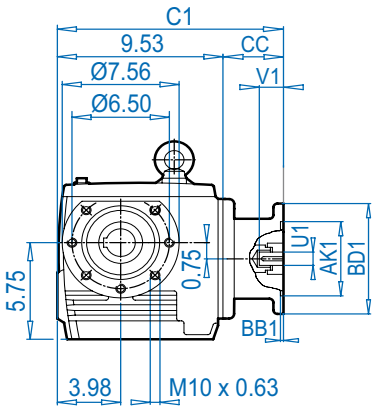


## NEMA Input

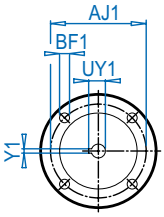


## SK 12080AZ**D**

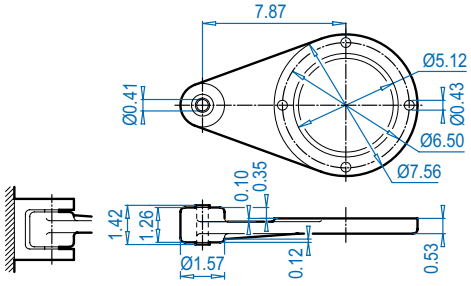


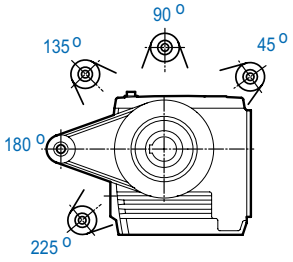


## SK 12080AZ**SH**

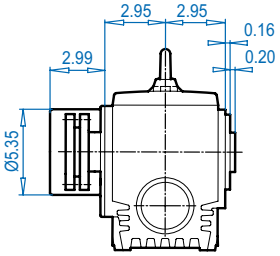


Dimensions in Inches
DIMENSIONS

## SK 12080AZ

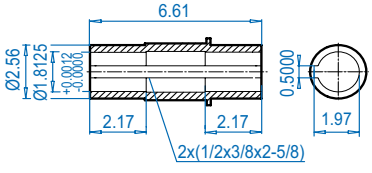


## SK 12080AZ**B** ⇨🕮 672

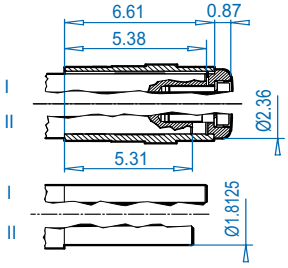


## SK 12080AZ**S** ⇨🕮 671

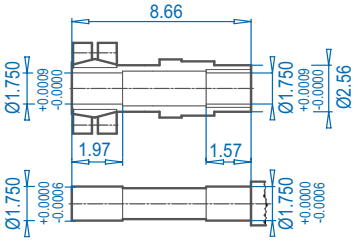


ALTERNATE SHAFTS SEE PAGES 669 - 671

**NEMA Dimensions**

| Type | AJ1 | AK1 | BB1 | BD1 | BF1 | U1 | V1 | UY1 | Y1 | C1 | CC |
|---|---|---|---|---|---|---|---|---|---|---|---|
| **56C** | 5.88 | 4.500 | 0.18 | 6.54 | 0.43 | 0.625 | 2.06 | 0.71 | 0.188 | 14.03 | 4.50 |
| **140TC** | 5.88 | 4.500 | 0.18 | 6.54 | 0.43 | 0.875 | 2.12 | 0.96 | 0.188 | 14.03 | 4.50 |
| **180TC** | 7.25 | 8.500 | 0.23 | 9.17 | 0.59 | 1.125 | 2.62 | 1.24 | 0.250 | 15.18 | 5.65 |



Send Quote Requests to info@automatedpt.com
Call +1(800)985-6929 To Order or Order Online At Nordgearmotors.com

# SK 13080 + Motor



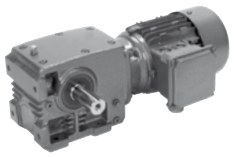

## SK 13080

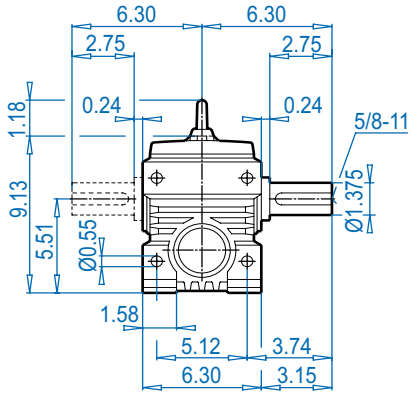


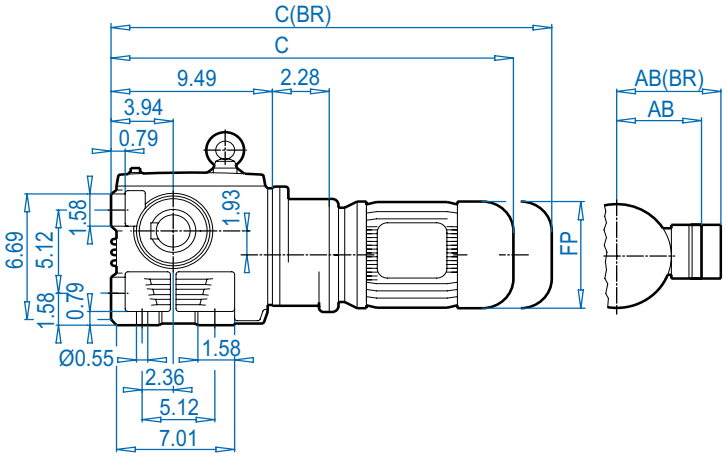


## SK 13080VF

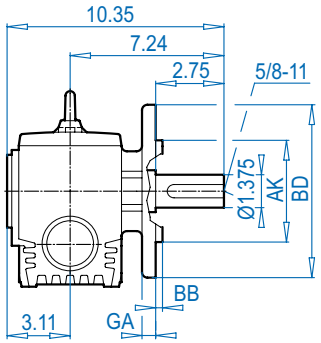


## SK 13080AF

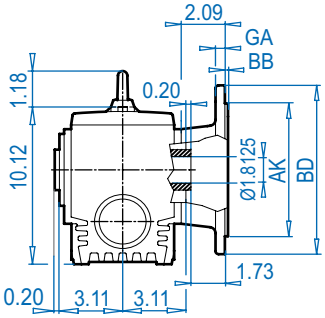


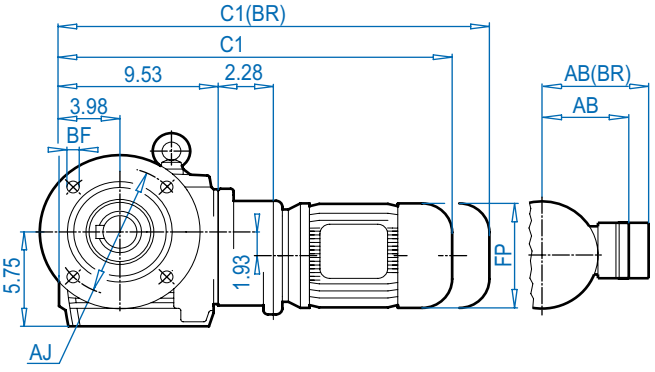


DIMENSIONS
Dimensions in Inches

## SK 13080V

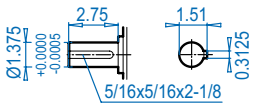


## SK 13080AF

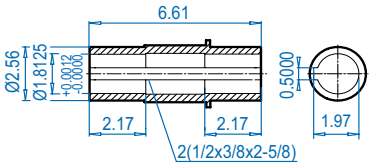


## SK 13080AF**B** ⇨🕮 672

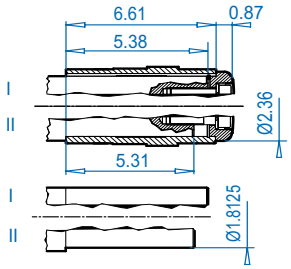


### Mounting flange

| Type | BD (mm) | AJ | AK | BB | BF | GA |
|---|---|---|---|---|---|---|
| SK 13080VF | 7.87 (200) | 6.50 | 5.118 + 0.0005 - 0.0004 | 0.16 | 0.43 | 0.47 |
| SK 13080AF | 9.84 (250) | 8.46 | 7.087 + 0.0006 - 0.0005 | 0.16 | 0.55 | 0.59 |
| SK 13080AF | 11.81 (300) | 10.43 | 9.055 + 0.0000 - 0.0014 | 0.16 | 0.55 | 0.79 |

### Motor dimensions

| Standard efficiency | 63S/L | 71S/L | | | | | For Other Connection Possibilities please see ⇨🕮 666 & 667 |
|---|---|---|---|---|---|---|---|
| Energy efficiency | | | | | | | |
| AB | 4.53 | 4.88 | | | | |  |
| AB (BR) | 4.84 | 5.24 | | | | | |
| C1 | 19.53 | 18.82 | | | | | |
| C1 (BR) | 21.10 | 23.39 | | | | | |
| C | 19.49 | 21.06 | | | | | |
| C (BR) | 21.70 | 23.35 | | | | | |
| FP | 5.12 | 5.71 | | | | | |

**(BR)** denotes Brakemotor

ALTERNATE SHAFTS SEE PAGES 669 - 671


Send Quote Requests to info@automatedpt.com
Call +1(800)985-6929 To Order or Order Online At Nordgearmotors.com

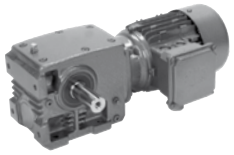

# SK 13080 + Motor

## SK 13080AZ

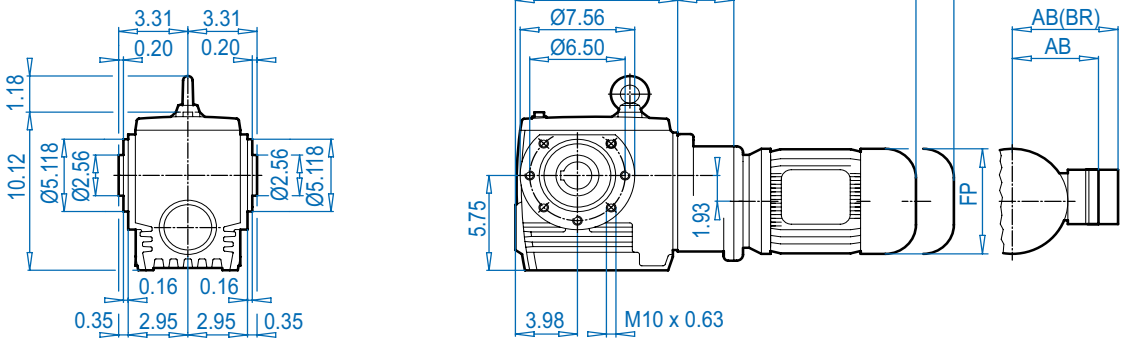


## SK 13080AZ**D**

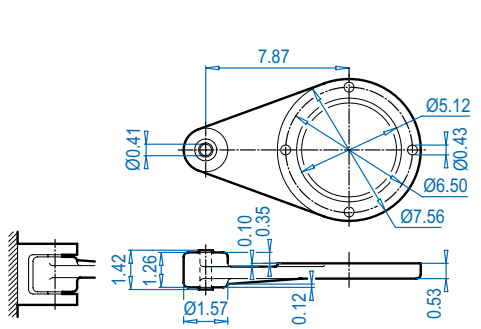


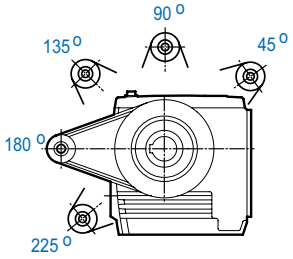


## SK 13080AZ**SH**

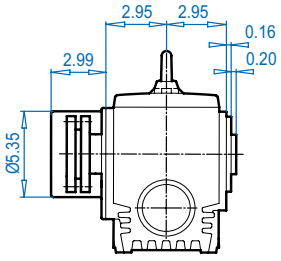


Dimensions in Inches
DIMENSIONS

## SK 13080AZ

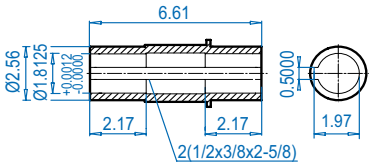


## SK 13080AZ**B** ⇨🕮 672

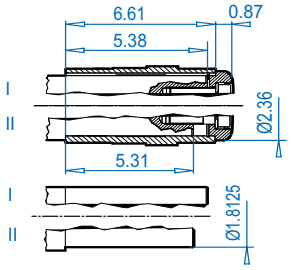


## SK 13080AZ**S** ⇨🕮 671

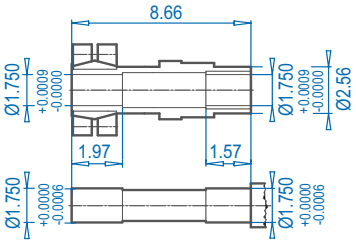


ALTERNATE SHAFTS SEE PAGES 669 - 671

**Motor dimensions**

| Standard efficiency | 63S/L | 71S/L | | | | | For Other Connection Possibilities please see ⇨🕮 666 & 667 |
|---|---|---|---|---|---|---|---|
| Energy efficiency | | | | | | | |
| AB | 4.53 | 4.88 | | | | | |
| AB (BR) | 4.84 | 5.24 | | | | | |
| C1 | 19.53 | 18.82 | | | | | |
| C1 (BR) | 21.10 | 23.39 | | | | | |
| FP | 5.12 | 5.71 | | | | | |

**(BR)** denotes Brakemotor



Send Quote Requests to info@automatedpt.com
Call +1(800)985-6929 To Order or Order Online At Nordgearmotors.com

# SK 13080 + NEMA





## SK 13080

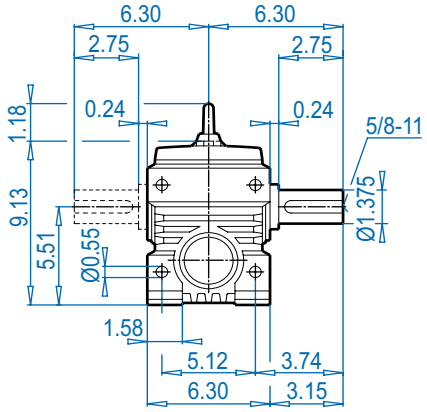


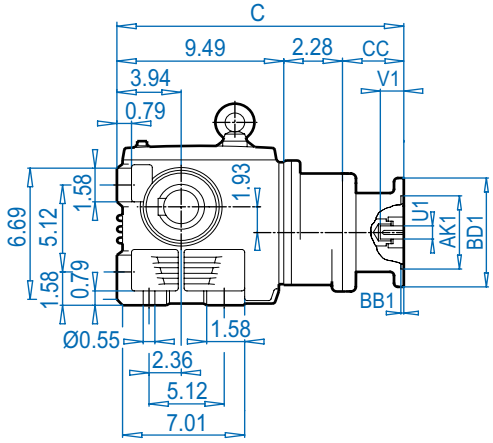


## NEMA Input

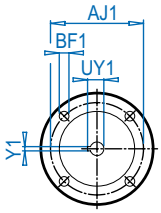


## SK 13080VF

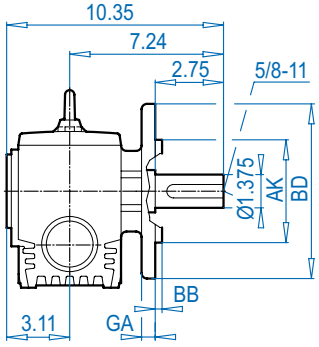


## SK 13080AF

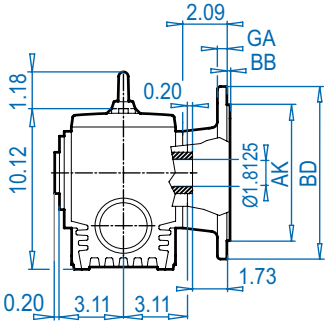


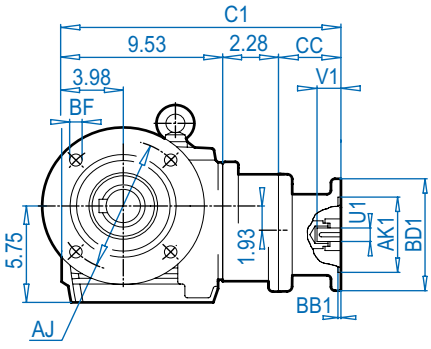


## SK 13080V

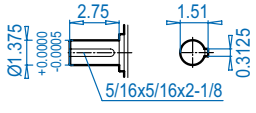


## SK 13080AF

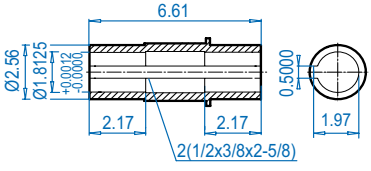


## SK 13080AFB ⇨🕮 672

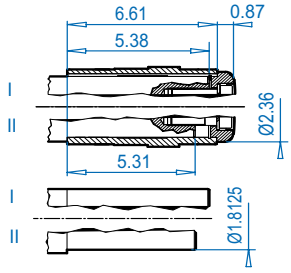


### Mounting flange

| Type | BD (mm) | AJ | AK | BB | BF | GA |
|---|---|---|---|---|---|---|
| **SK 13080VF** | 7.87 (200) | 6.50 | 5.118 $^{+0.0005}_{-0.0004}$ | 0.16 | 0.43 | 0.47 |
| **SK 13080AF** | 9.84 (250) | 8.46 | 7.087 $^{+0.0006}_{-0.0005}$ | 0.16 | 0.55 | 0.59 |
| **SK 13080AF** | 11.81 (300) | 10.43 | 9.055 $^{+0.0000}_{-0.0014}$ | 0.16 | 0.55 | 0.79 |

### NEMA Dimensions

| Type | AJ1 | AK1 | BB1 | BD1 | BF1 | U1 | V1 | UY1 | Y1 | C | C1 | CC |
|---|---|---|---|---|---|---|---|---|---|---|---|---|
| **56C** | 5.88 | 4.500 | 0.18 | 6.54 | 0.43 | 0.625 | 2.06 | 0.71 | 0.188 | 16.27 | 16.31 | 4.50 |

DIMENSIONS
Dimensions in Inches
ALTERNATE SHAFTS SEE PAGES 669 - 671


Send Quote Requests to info@automatedpt.com
Call +1(800)985-6929 To Order or Order Online At Nordgearmotors.com

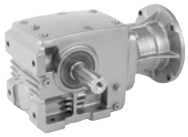


# SK 13080 + NEMA

## SK 13080AZ

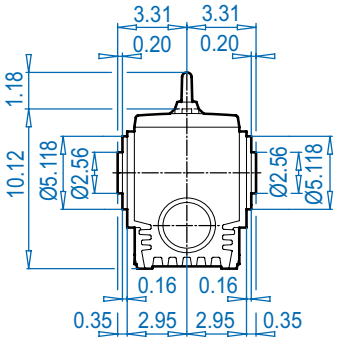


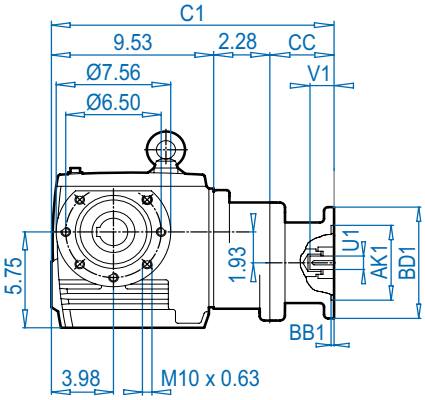


## NEMA Input

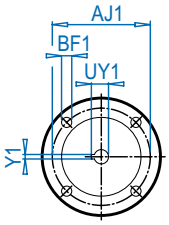


## SK 13080AZ**D**

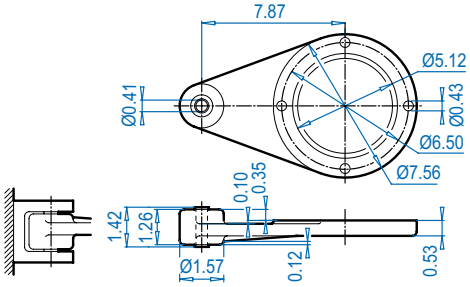


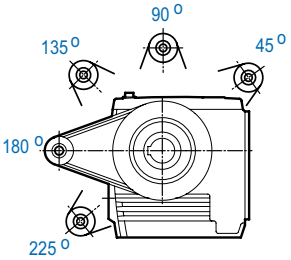


## SK 13080AZ**SH**

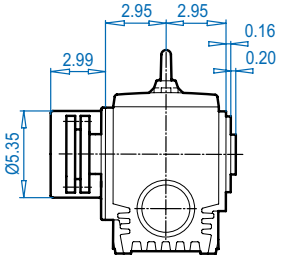


Dimensions in Inches
DIMENSIONS

ALTERNATE SHAFTS SEE PAGES 669 - 671

## SK 13080AZ

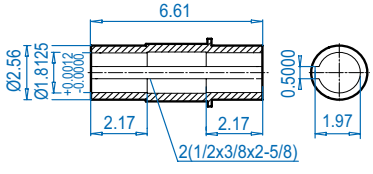


## SK 13080AZ**B** ⇨🕮 672

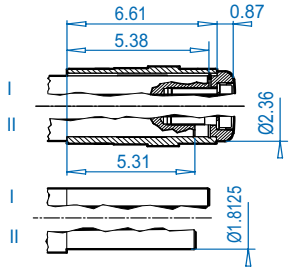


## SK 13080AZ**S** ⇨🕮 671

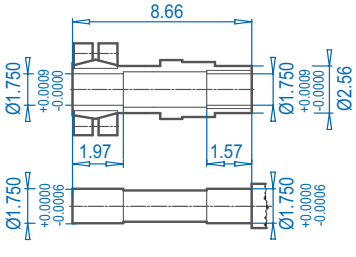


**NEMA Dimensions**

| Type | AJ1 | AK1 | BB1 | BD1 | BF1 | U1 | V1 | UY1 | Y1 | C1 | CC |
|---|---|---|---|---|---|---|---|---|---|---|---|
| **56C** | 5.88 | 4.500 | 0.18 | 6.54 | 0.43 | 0.625 | 2.06 | 0.71 | 0.188 | 16.31 | 4.50 |


Send Quote Requests to info@automatedpt.com
Call +1(800)985-6929 To Order or Order Online At Nordgearmotors.com

# SK 32100 + Motor



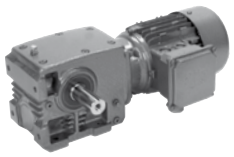

## SK 32100

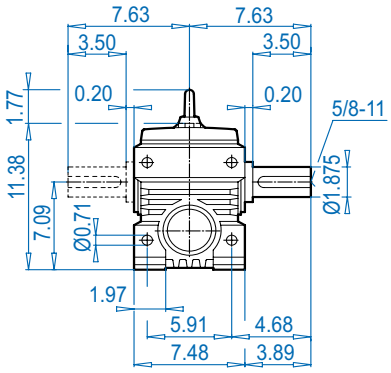


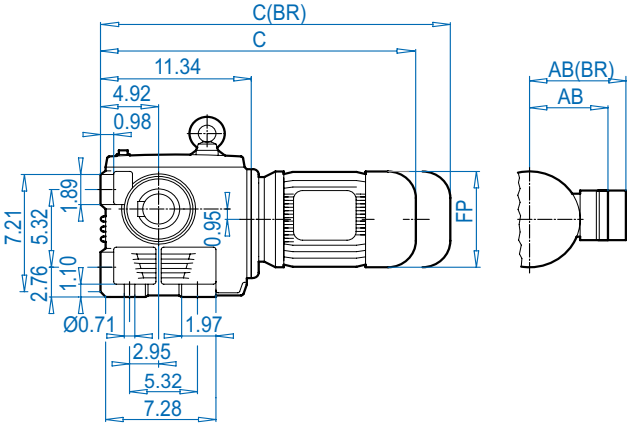


## SK 32100VF

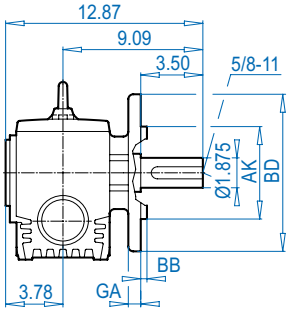


## SK 32100AF

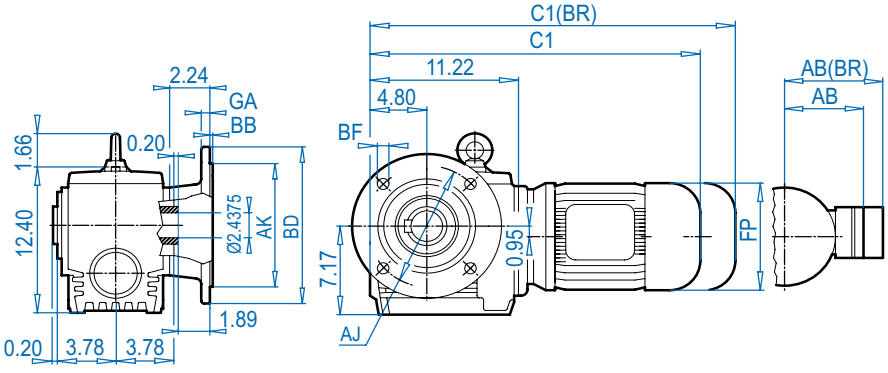


## SK 32100V

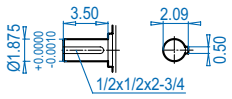


## SK 32100AF

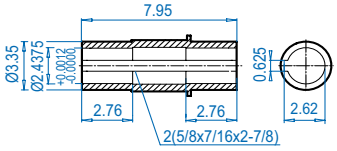


## SK 32100AFB

⇨🕮 672

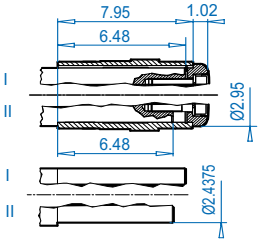


### Mounting flange

| Type | BD (mm) | AJ | AK | BB | BF | GA |
|---|---|---|---|---|---|---|
| SK 32100VF | 9.84 (250) | 8.47 | 7.087 + 0.0006 - 0.0005 | 0.16 | 0.55 | 0.63 |
| SK 32100AF | 13.78 (350) | 11.81 | 9.842 + 0.0000 - 0.0011 | 0.20 | 0.71 | 0.79 |

### Motor dimensions

| Standard efficiency | 71S/L | 80S/L | 90S/L | 100L | | 132S/M | For Other Connection Possibilities please see ⇨🕮 666 & 667 |
|---|---|---|---|---|---|---|---|
| Energy efficiency | | 80LH | 90SH/LH | 100LH | 112MH | 132SH/MH | |
| AB | 4.88 | 5.59 | 5.79 | 6.65 | 7.05 | 8.03 |  |
| AB (BR) | 5.24 | 5.63 | 5.83 | 6.26 | 6.69 | 7.72 | |
| C1 | 20.28 | 21.26 | 22.87 | 24.06 | 24.96 | 28.35 | |
| C1 (BR) | 22.56 | 23.78 | 25.83 | 27.64 | 28.62 | 32.56 | |
| C | 20.39 | 21.38 | 22.99 | 24.17 | 25.08 | 28.46 | |
| C (BR) | 22.68 | 23.90 | 25.95 | 27.76 | 28.74 | 32.68 | |
| FP | 5.71 | 6.50 | 7.20 | 7.91 | 8.98 | 10.47 | |

**(BR)** denotes Brakemotor




Send Quote Requests to info@automatedpt.com
Call +1(800)985-6929 To Order or Order Online At Nordgearmotors.com

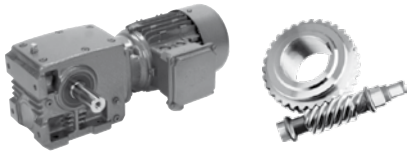

# SK 32100 + Motor

## SK 32100AZ

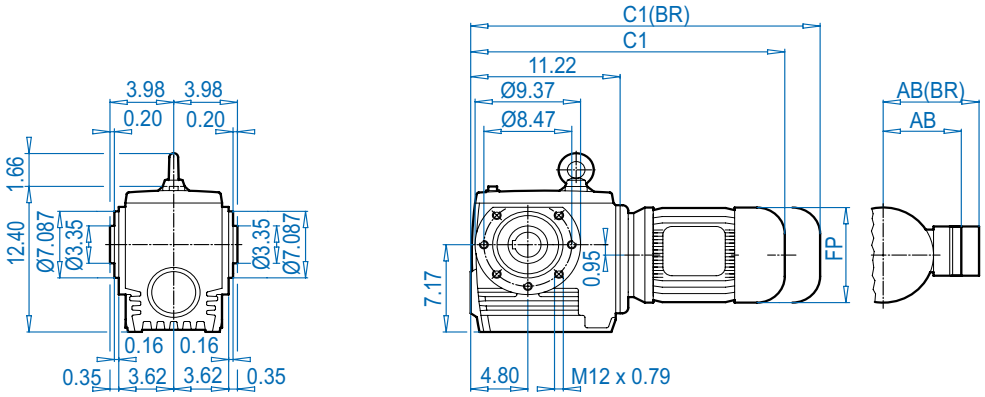


## SK 32100AZ**D**

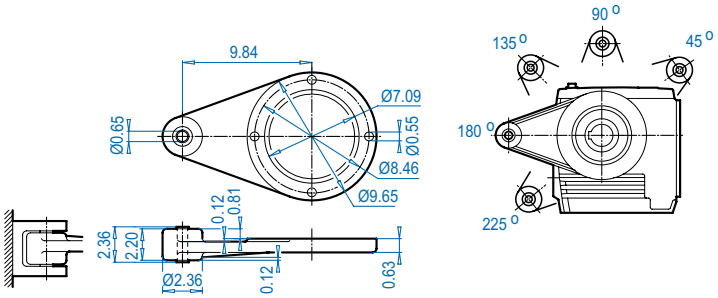


## SK 32100AZ**SH**

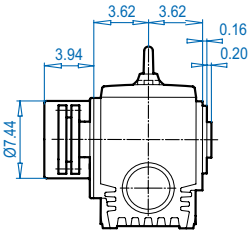


Dimensions in Inches
DIMENSIONS

## SK 32100AZ

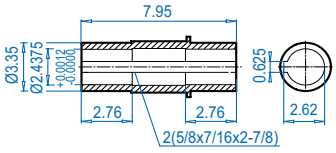


## SK 32100AZ**B** ⇨🕮 672

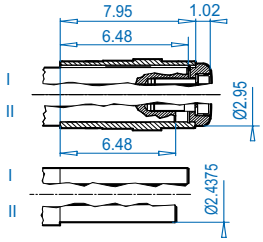


## SK 32100AZ**S** ⇨🕮 671

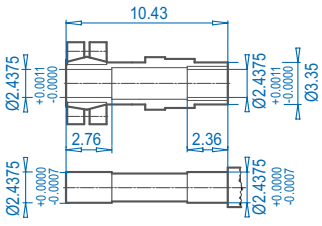


ALTERNATE SHAFTS SEE PAGES 669 - 671

**Motor dimensions**

| Standard efficiency | 71S/L | 80S/L | 90S/L | 100L | | 132S/M | For Other Connection Possibilities please see ⇨🕮 666 & 667 |
|---|---|---|---|---|---|---|---|
| Energy efficiency | | 80LH | 90SH/LH | 100LH | 112MH | 132SH/MH | |
| AB | 4.88 | 5.59 | 5.79 | 6.65 | 7.05 | 8.03 | 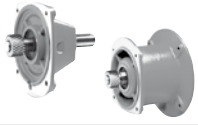 |
| AB (BR) | 5.24 | 5.63 | 5.83 | 6.26 | 6.69 | 7.72 | |
| C1 | 20.28 | 21.26 | 22.87 | 24.06 | 24.96 | 28.35 | |
| C1 (BR) | 22.56 | 23.78 | 25.83 | 27.64 | 28.62 | 32.56 | |
| FP | 5.71 | 6.50 | 7.20 | 7.91 | 8.98 | 10.47 | |

**(BR)** denotes Brakemotor


Send Quote Requests to info@automatedpt.com
Call +1(800)985-6929 To Order or Order Online At Nordgearmotors.com

# SK 32100 + NEMA





## SK 32100

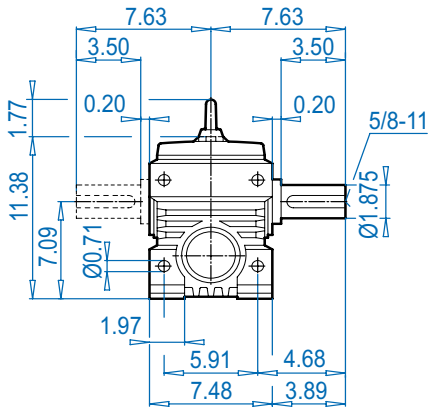


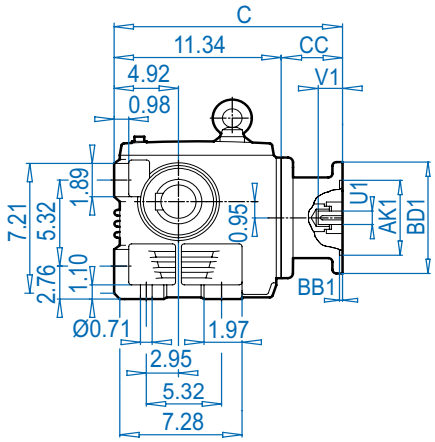


## NEMA Input

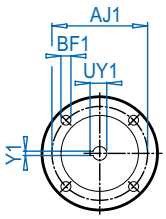


DIMENSIONS

Dimensions in Inches

## SK 32100VF

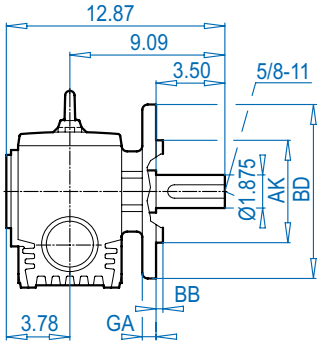


## SK 32100AF

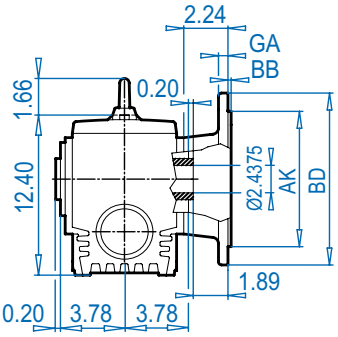


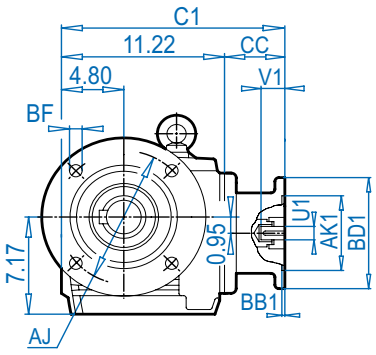


## SK 32100V

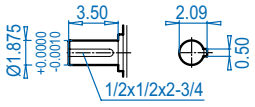


## SK 32100AF

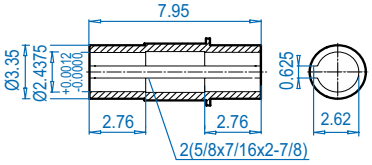


## SK 32100AFB ⇨🕮 672

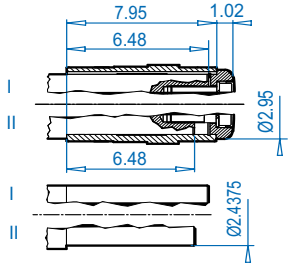


### Mounting flange

| Type | BD (mm) | AJ | AK | BB | BF | GA |
|---|---|---|---|---|---|---|
| SK 32100VF | 9.84 (250) | 8.47 | 7.087 +0.0006 -0.0005 | 0.16 | 0.55 | 0.63 |
| SK 32100AF | 13.78 (350) | 11.81 | 9.842 +0.0000 -0.0011 | 0.20 | 0.71 | 0.79 |

### NEMA Dimensions

| Type | AJ1 | AK1 | BB1 | BD1 | BF1 | U1 | V1 | UY1 | Y1 | C | C1 | CC |
|---|---|---|---|---|---|---|---|---|---|---|---|---|
| 56C | 5.88 | 4.500 | 0.18 | 6.54 | 0.43 | 0.625 | 2.06 | 0.71 | 0.188 | 15.94 | 15.82 | 4.60 |
| 140TC | 5.88 | 4.500 | 0.18 | 6.54 | 0.43 | 0.875 | 2.12 | 0.96 | 0.188 | 15.94 | 15.82 | 4.60 |
| 180TC | 7.25 | 8.500 | 0.23 | 9.17 | 0.59 | 1.125 | 2.62 | 1.24 | 0.250 | 17.94 | 17.82 | 6.60 |
| 210TC | 7.25 | 8.500 | 0.23 | 9.17 | 0.59 | 1.375 | 3.12 | 1.52 | 0.312 | 17.94 | 17.82 | 6.60 |

ALTERNATE SHAFTS SEE PAGES 669 - 671

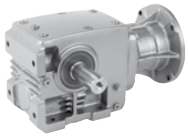


# SK 32100 + NEMA

## SK 32100AZ

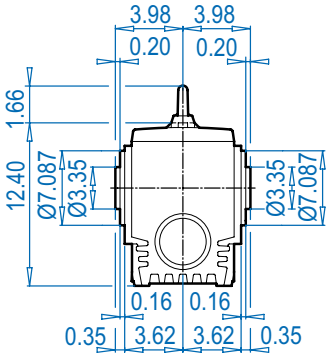


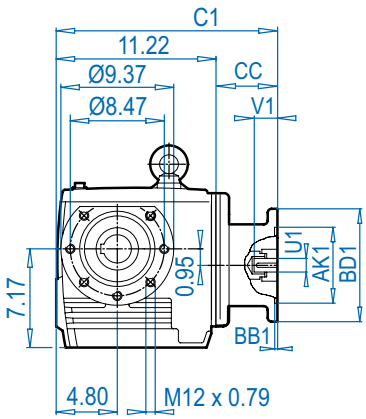


## NEMA Input

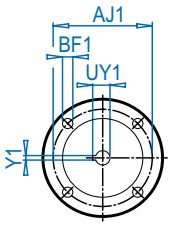


## SK 32100AZ**D**

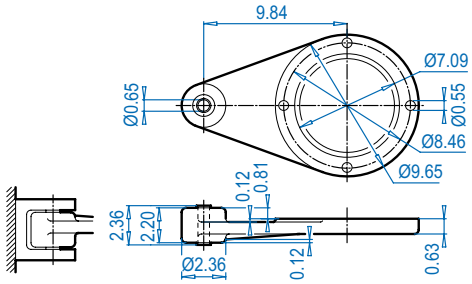


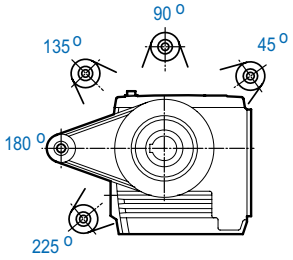


## SK 32100AZ**SH**

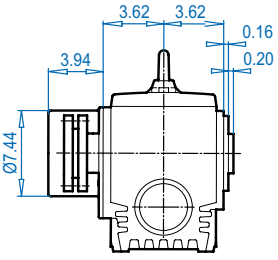


Dimensions in Inches
DIMENSIONS

## SK 32100AZ

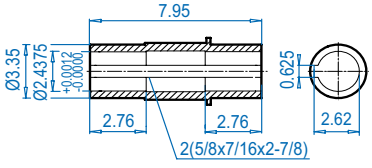


## SK 32100AZ**B** ⇨🕮 672

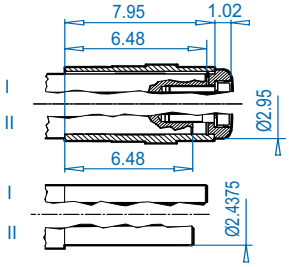


## SK 32100AZ**S** ⇨🕮 671

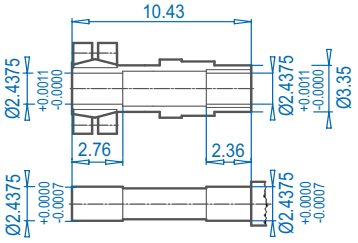


ALTERNATE SHAFTS SEE PAGES 669 - 671

**NEMA Dimensions**

| Type | AJ1 | AK1 | BB1 | BD1 | BF1 | U1 | V1 | UY1 | Y1 | C1 | CC |
|---|---|---|---|---|---|---|---|---|---|---|---|
| **56C** | 5.88 | 4.500 | 0.18 | 6.54 | 0.43 | 0.625 | 2.06 | 0.71 | 0.188 | 15.82 | 4.60 |
| **140TC** | 5.88 | 4.500 | 0.18 | 6.54 | 0.43 | 0.875 | 2.12 | 0.96 | 0.188 | 15.82 | 4.60 |
| **180TC** | 7.25 | 8.500 | 0.23 | 9.17 | 0.59 | 1.125 | 2.62 | 1.24 | 0.250 | 17.82 | 6.60 |
| **210TC** | 7.25 | 8.500 | 0.23 | 9.17 | 0.59 | 1.375 | 3.12 | 1.52 | 0.312 | 17.82 | 6.60 |


Send Quote Requests to info@automatedpt.com
Call +1(800)985-6929 To Order or Order Online At Nordgearmotors.com

# SK 33100 + Motor



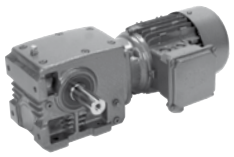

## SK 33100

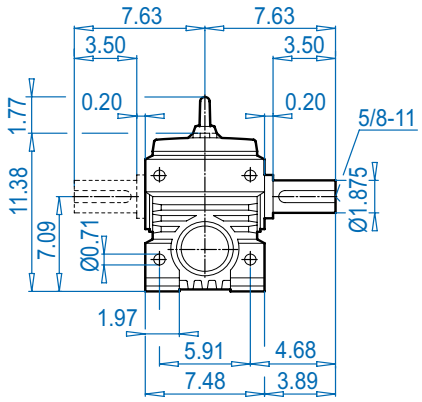


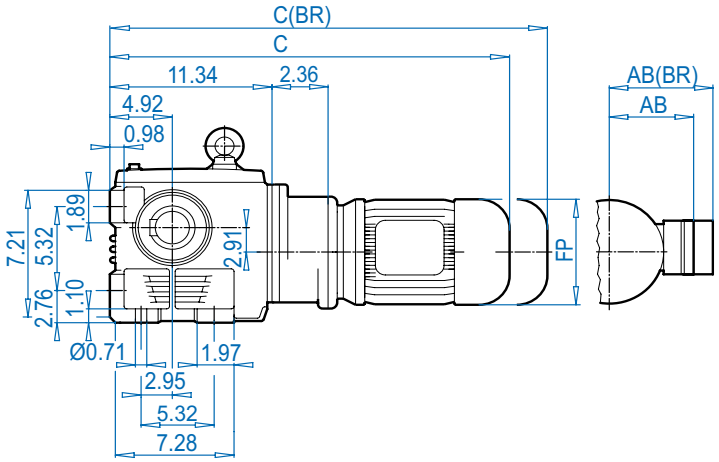


## SK 33100VF

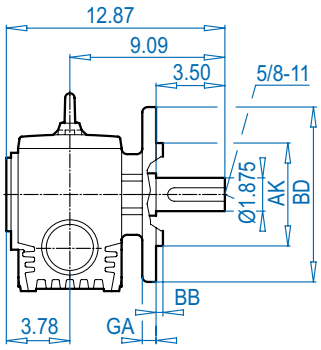


## SK 33100AF

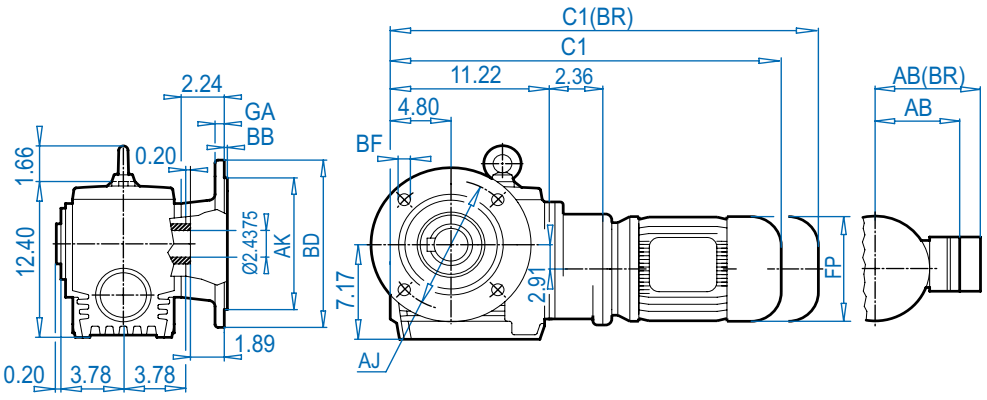


## SK 33100V

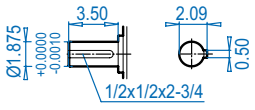


## SK 33100AF

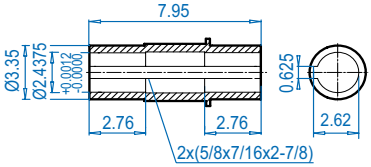


## SK 33100AFB ⇨🕮 672

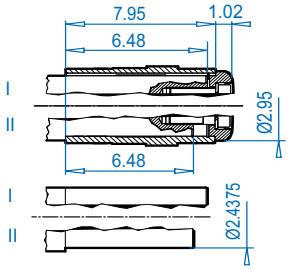


### Mounting flange

| Type | BD (mm) | AJ | AK | BB | BF | GA |
|---|---|---|---|---|---|---|
| SK 33100VF | 9.84 (250) | 8.47 | 7.087 + 0.0006 - 0.0005 | 0.16 | 0.55 | 0.63 |
| SK 33100AF | 13.78 (350) | 11.81 | 9.842 + 0.0000 - 0.0011 | 0.20 | 0.71 | 0.79 |

### Motor dimensions

| Standard efficiency | 63S/L | 71S/L | 80S/L | 90S/L | | | For Other Connection Possibilities please see ⇨🕮 666 & 667 |
|---|---|---|---|---|---|---|---|
| Energy efficiency | | | 80LH | 90SH/LH | | | |
| AB | 4.53 | 4.88 | 5.59 | 5.79 | | |  |
| AB (BR) | 4.84 | 5.24 | 5.63 | 5.83 | | | |
| C1 | 21.34 | 22.91 | 23.90 | 25.51 | | | |
| C1 (BR) | 23.54 | 25.20 | 26.42 | 28.46 | | | |
| C | 21.46 | 23.03 | 24.02 | 25.63 | | | |
| C (BR) | 23.66 | 25.31 | 26.54 | 28.58 | | | |
| FP | 5.12 | 5.71 | 6.50 | 7.20 | | | |

**(BR)** denotes Brakemotor

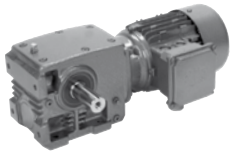

# SK 33100 + Motor

## SK 33100AZ

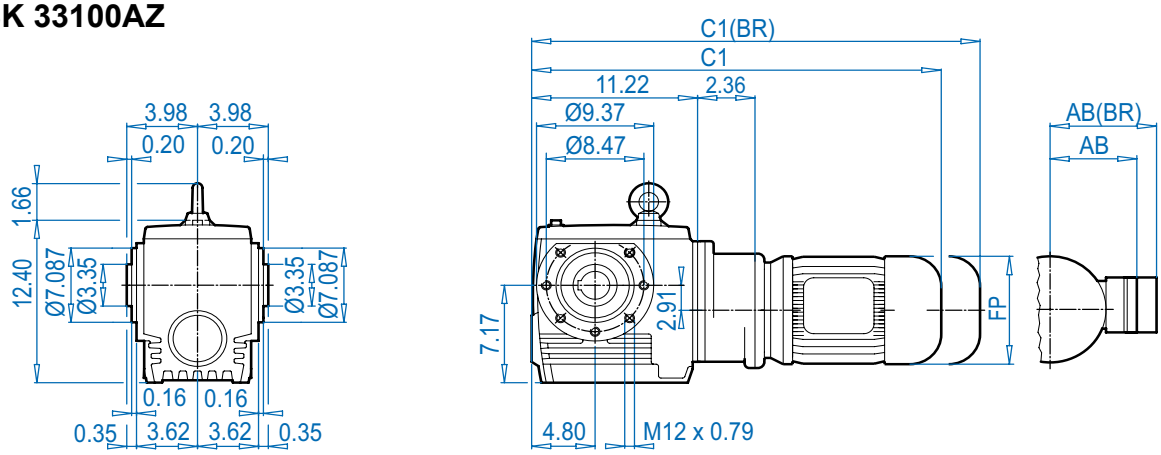


## SK 33100AZ**D**

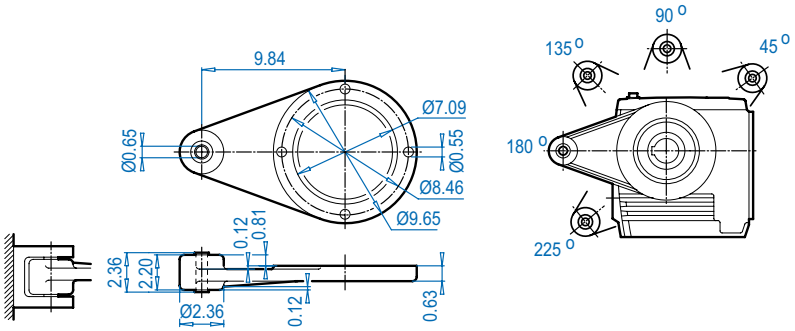


## SK 33100AZ**SH**

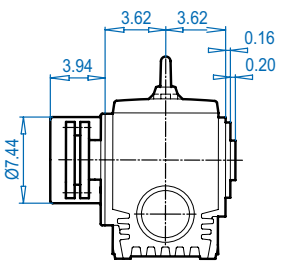


Dimensions in Inches
DIMENSIONS

## SK 33100AZ

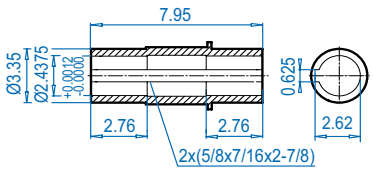


## SK 33100AZ**B** ⇨📖 672

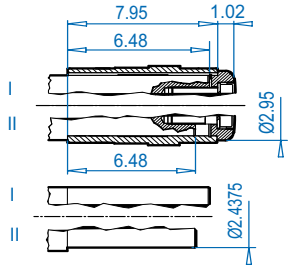


## SK 33100AZ**S** ⇨📖 671

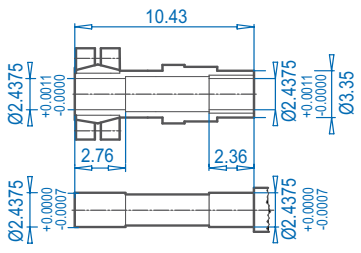


ALTERNATE SHAFTS SEE PAGES 669 - 671

**Motor dimensions**

| Standard efficiency | 63S/L | 71S/L | 80S/L | 90S/L | | | For Other Connection Possibilities please see ⇨📖 666 & 667 |
|---|---|---|---|---|---|---|---|
| Energy efficiency | | | 80LH | 90SH/LH | | | |
| AB | 4.53 | 4.88 | 5.59 | 5.79 | | | 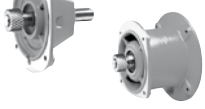 |
| AB (BR) | 4.84 | 5.24 | 5.63 | 5.83 | | | |
| C1 | 21.34 | 22.91 | 23.90 | 25.51 | | | |
| C1 (BR) | 23.54 | 25.20 | 26.42 | 28.46 | | | |
| FP | 5.12 | 5.71 | 6.50 | 7.20 | | | |

**(BR)** denotes Brakemotor


Send Quote Requests to info@automatedpt.com
Call +1(800)985-6929 To Order or Order Online At Nordgearmotors.com

# SK 33100 + NEMA





## SK 33100

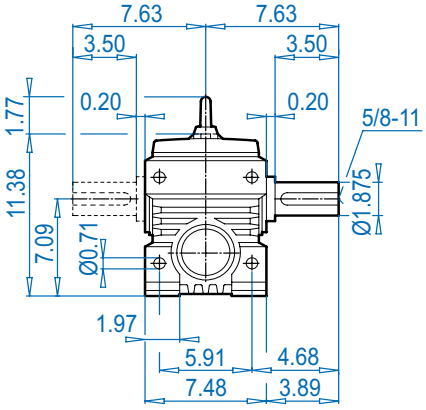


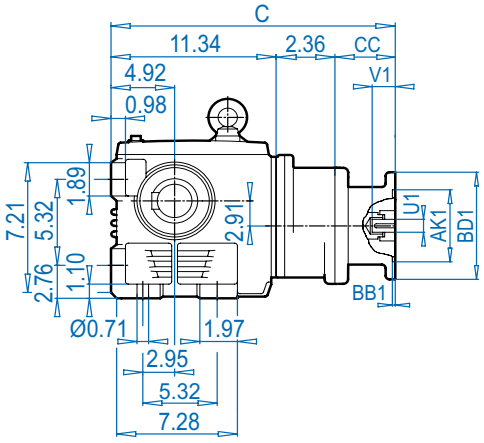


## NEMA Input

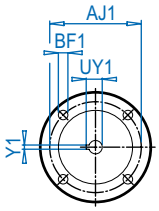


## SK 33100VF

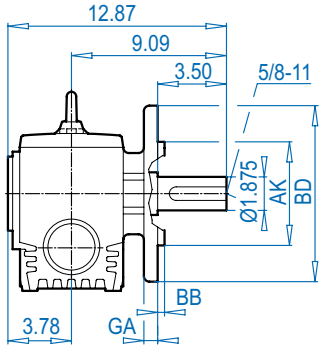


## SK 33100AF

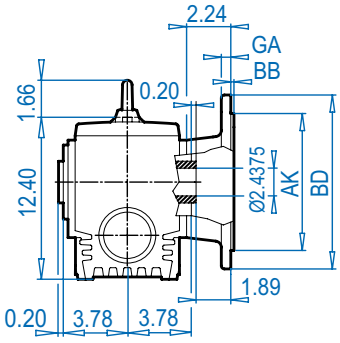


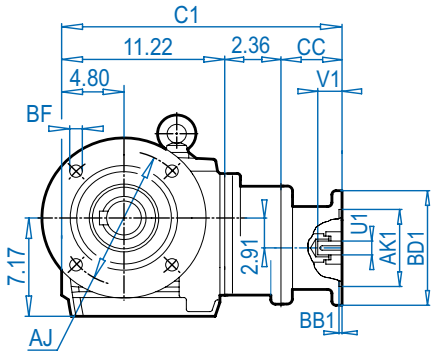


## SK 33100V

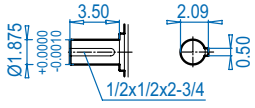


## SK 33100AF

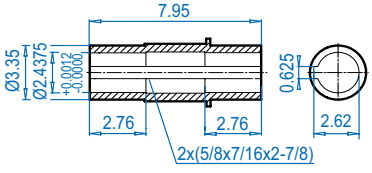


## SK 33100AFB ⇨🕮 672

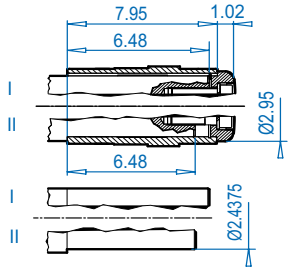


### Mounting flange

| Type | BD (mm) | AJ | AK | BB | BF | GA |
|---|---|---|---|---|---|---|
| SK 33100VF | 9.84 (250) | 8.47 | 7.087 + 0.0006 - 0.0005 | 0.16 | 0.55 | 0.63 |
| SK 33100AF | 13.78 (350) | 11.81 | 9.842 + 0.0000 - 0.0011 | 0.20 | 0.71 | 0.79 |

### NEMA Dimensions

| Type | AJ1 | AK1 | BB1 | BD1 | BF1 | U1 | V1 | UY1 | Y1 | C | C1 | CC |
|---|---|---|---|---|---|---|---|---|---|---|---|---|
| 56C | 5.88 | 4.500 | 0.18 | 6.54 | 0.43 | 0.625 | 2.06 | 0.71 | 0.188 | 18.20 | 18.08 | 4.50 |
| 140TC | 5.88 | 4.500 | 0.18 | 6.54 | 0.43 | 0.875 | 2.12 | 0.96 | 0.188 | 18.20 | 18.08 | 4.50 |

DIMENSIONS
Dimensions in Inches
ALTERNATE SHAFTS SEE PAGES 669 - 671

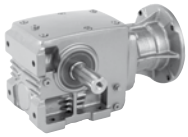


# SK 33100 + NEMA

## SK 33100AZ

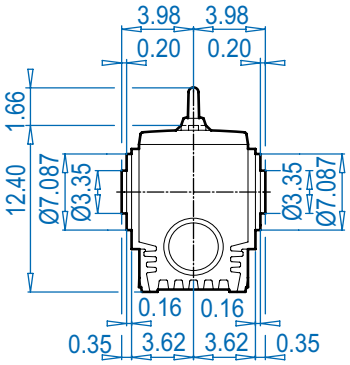


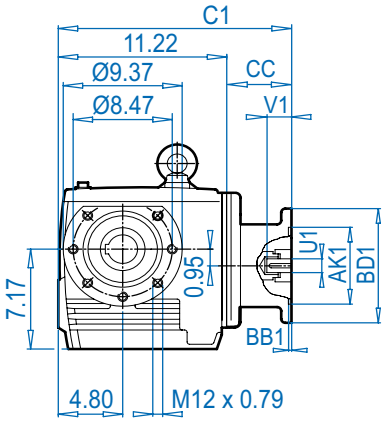


## NEMA Input

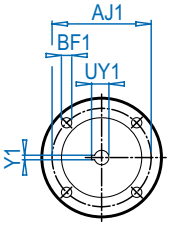


## SK 33100AZ**D**

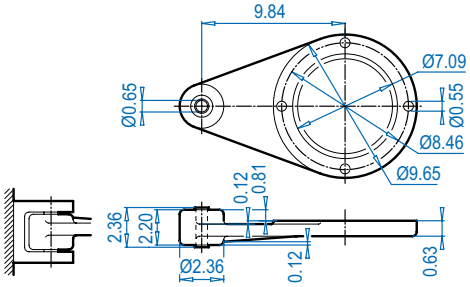


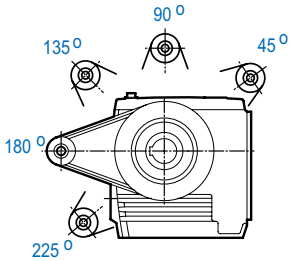


## SK 33100AZ**SH**

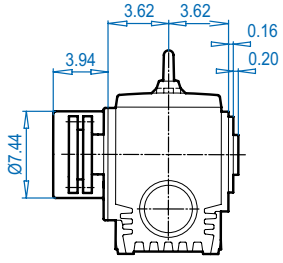


Dimensions in Inches
DIMENSIONS

ALTERNATE SHAFTS SEE PAGES 669 - 671

## SK 33100AZ

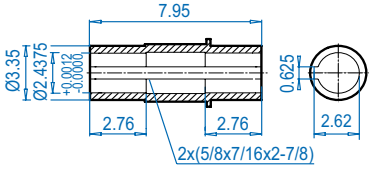


## SK 33100AZ**B** ⇨🕮 672

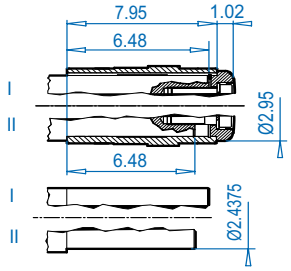


## SK 33100AZ**S** ⇨🕮 671

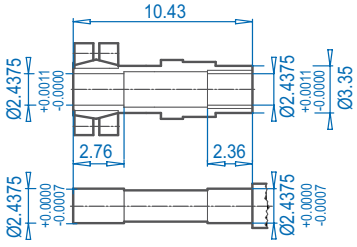


**NEMA Dimensions**

| Type | AJ1 | AK1 | BB1 | BD1 | BF1 | U1 | V1 | UY1 | Y1 | C1 | CC |
|---|---|---|---|---|---|---|---|---|---|---|---|
| **56C** | 5.88 | 4.500 | 0.18 | 6.54 | 0.43 | 0.625 | 2.06 | 0.71 | 0.188 | 18.08 | 4.50 |
| **140TC** | 5.88 | 4.500 | 0.18 | 6.54 | 0.43 | 0.875 | 2.12 | 0.96 | 0.188 | 18.08 | 4.50 |


Send Quote Requests to info@automatedpt.com
Call +1(800)985-6929 To Order or Order Online At Nordgearmotors.com

# SK 42125 + Motor



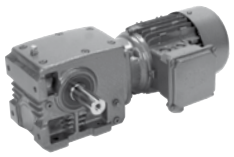

## SK 42125

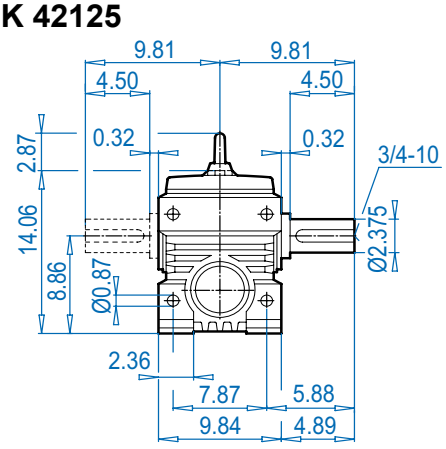


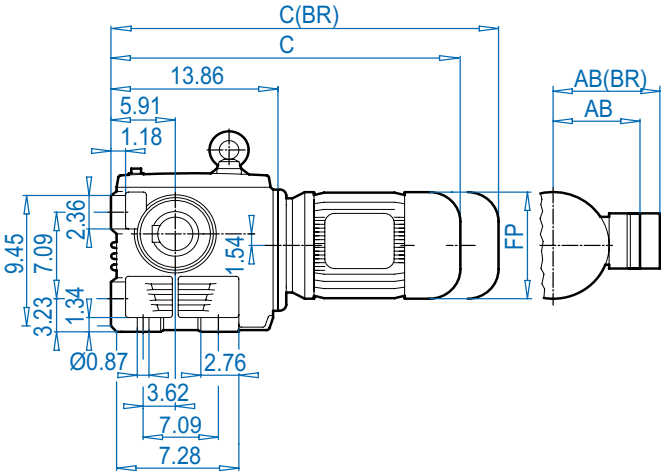


## SK 42125VF

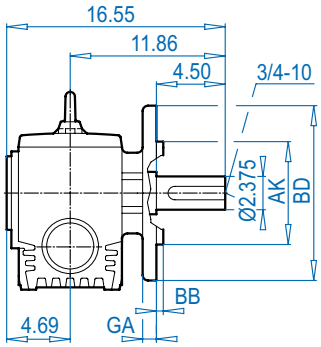


## SK 42125AF

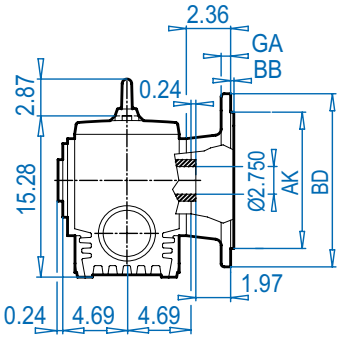


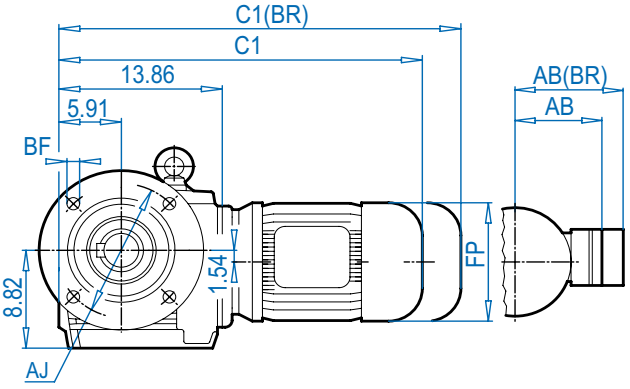


## SK 42125V

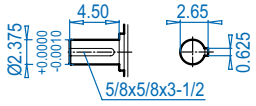


## SK 42125AF

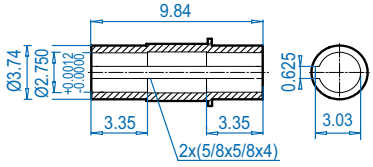


## SK 42125AFB ⇨📖 672

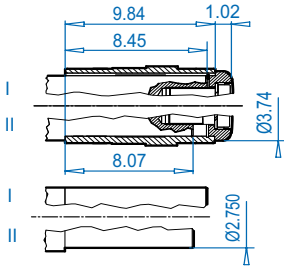


### Mounting flange

| Type | BD (mm) | AJ | AK | BB | BF | GA |
|---|---|---|---|---|---|---|
| SK 42125VF | 13.78 (350) | 11.81 | 9.843 +0.0000 -0.0011 | 0.20 | 0.71 | 0.79 |
| SK 42125AF | 15.75 (400) | 13.78 | 11.811 +0.0000 -0.0013 | 0.20 | 0.71 | 0.79 |
| SK 42125AF | 17.72 (450) | 15.75 | 13.779 +0.0000 -0.0014 | 0.20 | 0.71 | 0.87 |

### Motor dimensions

| Standard efficiency | 90S/L | 100L | 112M | 132S/M | 160M/L | | For Other Connection Possibilities please see ⇨📖 666 & 667 |
|---|---|---|---|---|---|---|---|
| Energy efficiency | 90SH/LH | 100LH | 112MH | 132SH/MH | 160MH | 160LH | |
| AB | 5.79 | 6.65 | 7.05 | 8.03 | 8.90 | 8.90 |  |
| AB (BR) | 5.83 | 6.26 | 6.69 | 7.72 | 8.90 | 8.90 | |
| C1 | 24.73 | 25.91 | 26.81 | 30.20 | 32.68 | 34.25 | |
| C1 (BR) | 27.68 | 29.49 | 30.47 | 34.41 | 39.26 | 40.99 | |
| C | 24.73 | 25.91 | 26.81 | 30.20 | 32.68 | 34.25 | |
| C (BR) | 27.68 | 29.49 | 30.47 | 34.41 | 39.26 | 40.99 | |
| FP | 7.20 | 7.91 | 8.98 | 10.47 | 12.60 | 12.60 | |

**(BR)** denotes Brakemotor

DIMENSIONS
Dimensions in Inches
ALTERNATE SHAFTS SEE PAGES 669 - 671


Send Quote Requests to info@automatedpt.com
Call +1(800)985-6929 To Order or Order Online At Nordgearmotors.com

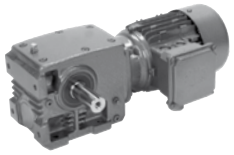

# SK 42125 + Motor

## SK 42125AZ

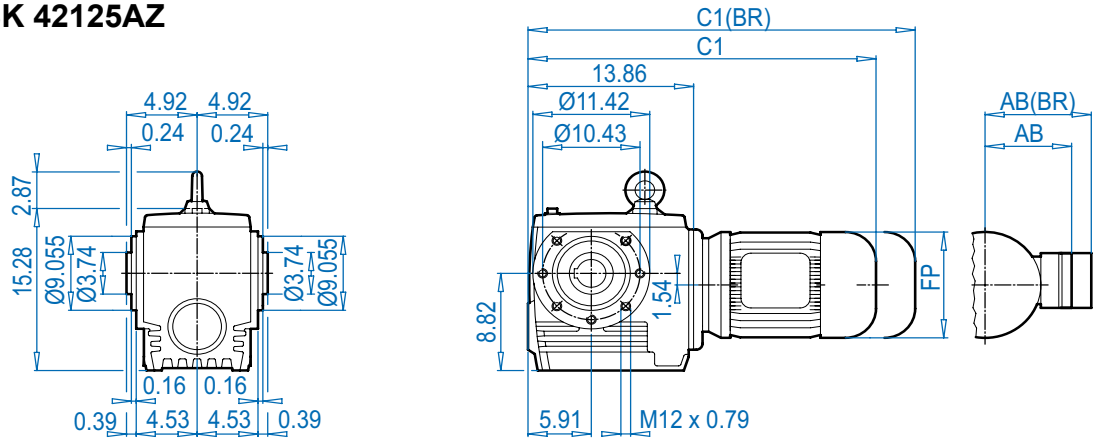


## SK 42125AZ**D**

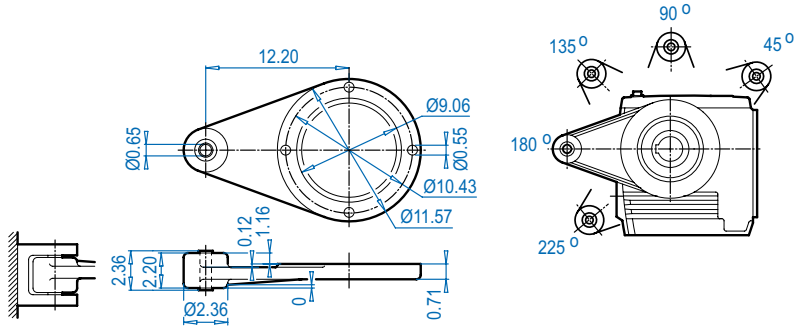


## SK 42125AZ**SH**

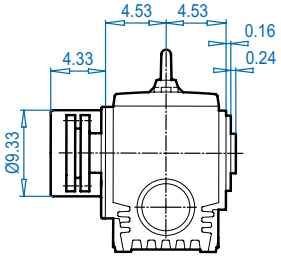


Dimensions in Inches
DIMENSIONS

## SK 42125AZ

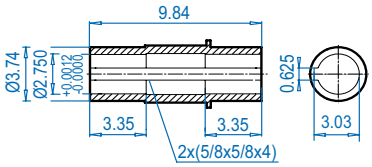


## SK 42125AZ**B** ⇨📖 672

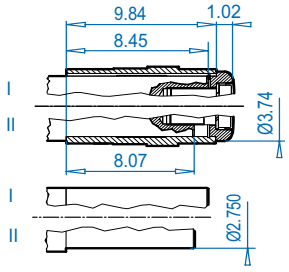


## SK 42125AZ**S** ⇨📖 671

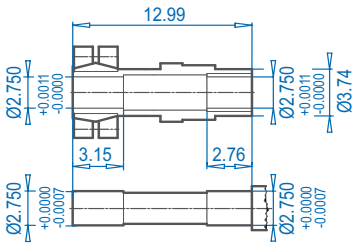


ALTERNATE SHAFTS SEE PAGES 669 - 671

**Motor dimensions**

| Standard efficiency | 90S/L | 100L | 112M | 132S/M | 160M/L | | For Other Connection Possibilities please see ⇨📖 666 & 667 |
|---|---|---|---|---|---|---|---|
| Energy efficiency | 90SH/LH | 100LH | 112MH | 132SH/MH | 160MH | 160LH | |
| AB | 5.79 | 6.65 | 7.05 | 8.03 | 8.90 | 8.90 | 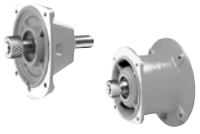 |
| AB (BR) | 5.83 | 6.26 | 6.69 | 7.72 | 8.90 | 8.90 | |
| C1 | 24.73 | 25.91 | 26.81 | 30.20 | 32.68 | 34.25 | |
| C1 (BR) | 27.68 | 29.49 | 30.47 | 34.41 | 39.26 | 40.99 | |
| FP | 7.20 | 7.91 | 8.98 | 10.47 | 12.60 | 12.60 | |

**(BR)** denotes Brakemotor


Send Quote Requests to info@automatedpt.com
Call +1(800)985-6929 To Order or Order Online At Nordgearmotors.com

# SK 42125 + NEMA





## SK 42125

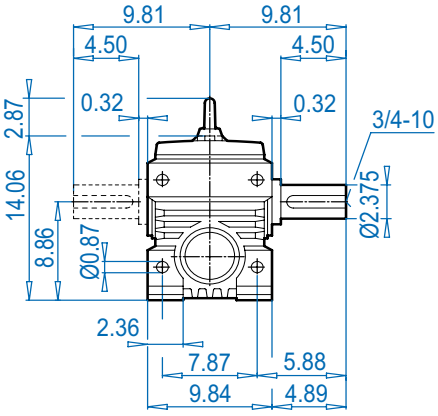


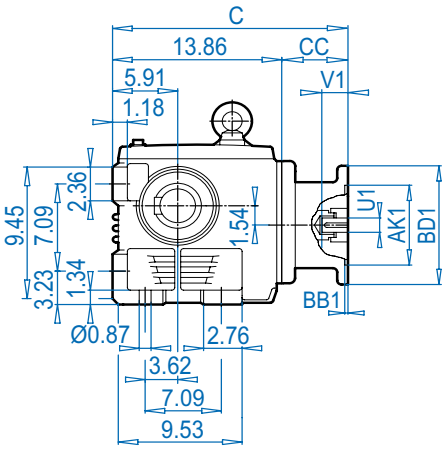


## NEMA Input

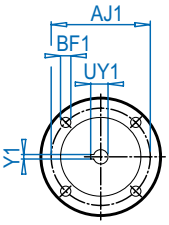


## SK 42125VF

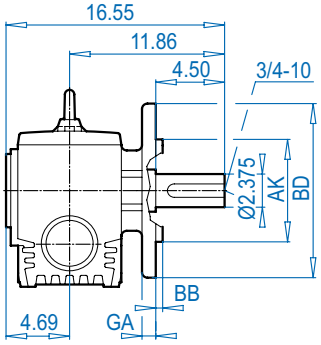


## SK 42125AF

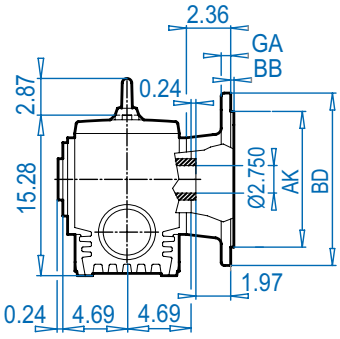


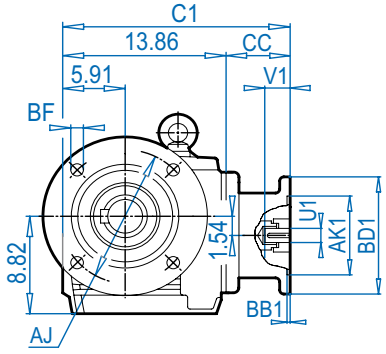


## SK 42125V

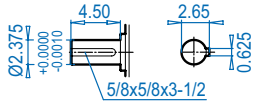


## SK 42125AF

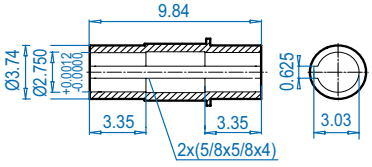


## SK 42125AFB ⇨🕮 672

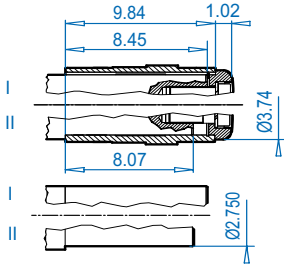


### Mounting flange

| Type | BD (mm) | AJ | AK | BB | BF | GA |
|---|---|---|---|---|---|---|
| SK 42125VF | 13.78 (350) | 11.81 | 9.843 + 0.0000 - 0.0011 | 0.20 | 0.71 | 0.79 |
| SK 42125AF | 15.75 (400) | 13.78 | 11.811 + 0.0000 - 0.0013 | 0.20 | 0.71 | 0.79 |
| SK 42125AF | 17.72 (450) | 15.75 | 13.779 + 0.0000 - 0.0014 | 0.20 | 0.71 | 0.87 |

### NEMA Dimensions

| Type | AJ1 | AK1 | BB1 | BD1 | BF1 | U1 | V1 | UY1 | Y1 | C | C1 | CC |
|---|---|---|---|---|---|---|---|---|---|---|---|---|
| 56C | 5.88 | 4.500 | 0.18 | 6.54 | 0.43 | 0.625 | 2.06 | 0.71 | 0.188 | 18.16 | 18.16 | 4.30 |
| 140TC | 5.88 | 4.500 | 0.18 | 6.54 | 0.43 | 0.875 | 2.12 | 0.96 | 0.188 | 18.16 | 18.16 | 4.30 |
| 180TC | 7.25 | 8.500 | 0.23 | 9.17 | 0.59 | 1.125 | 2.62 | 1.24 | 0.250 | 21.76 | 21.76 | 7.90 |
| 210TC | 7.25 | 8.500 | 0.23 | 9.17 | 0.59 | 1.375 | 3.12 | 1.52 | 0.312 | 21.76 | 21.76 | 7.90 |
| 250TC | 7.25 | 8.500 | 0.23 | 9.17 | 0.59 | 1.625 | 3.75 | 1.80 | 0.375 | 21.76 | 21.76 | 7.90 |

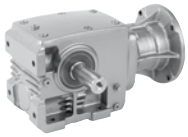


# SK 42125 + NEMA

## SK 42125AZ

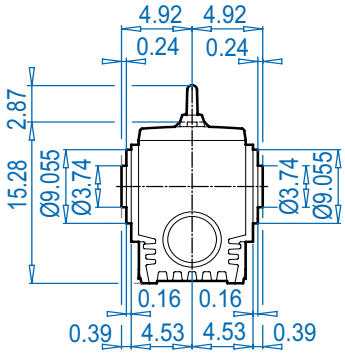


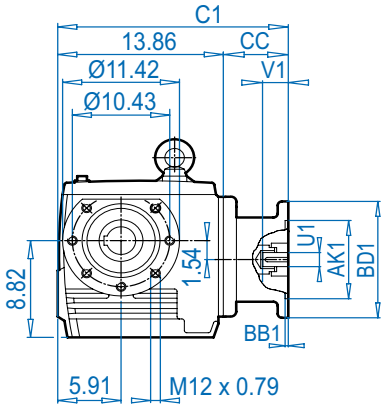


## NEMA Input

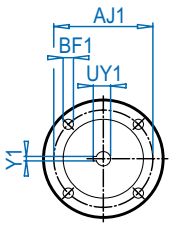


## SK 42125AZ**D**

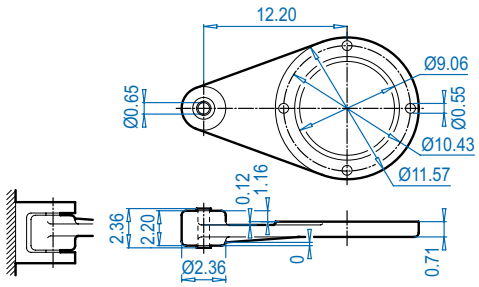


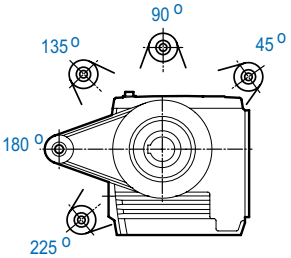


## SK 42125AZ**SH**

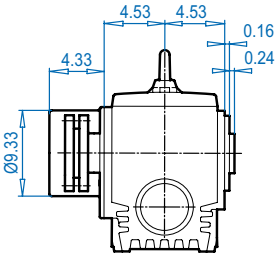


Dimensions in Inches
DIMENSIONS

## SK 42125AZ

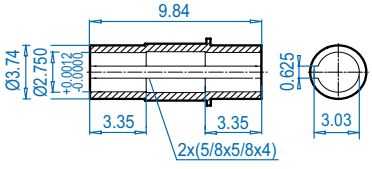


## SK 42125AZ**B** ⇨🕮 672

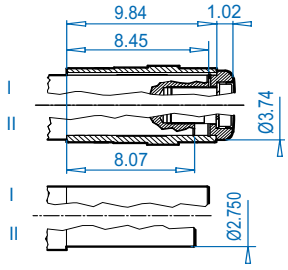


## SK 42125AZ**S** ⇨🕮 671

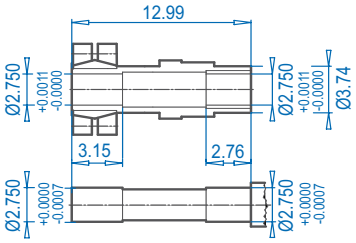


ALTERNATE SHAFTS SEE PAGES 669 - 671

### NEMA Dimensions

| Type | AJ1 | AK1 | BB1 | BD1 | BF1 | U1 | V1 | UY1 | Y1 | C1 | CC |
|---|---|---|---|---|---|---|---|---|---|---|---|
| **56C** | 5.88 | 4.500 | 0.18 | 6.54 | 0.43 | 0.625 | 2.06 | 0.71 | 0.188 | 18.16 | 4.30 |
| **140TC** | 5.88 | 4.500 | 0.18 | 6.54 | 0.43 | 0.875 | 2.12 | 0.96 | 0.188 | 18.16 | 4.30 |
| **180TC** | 7.25 | 8.500 | 0.23 | 9.17 | 0.59 | 1.125 | 2.62 | 1.24 | 0.250 | 21.76 | 7.90 |
| **210TC** | 7.25 | 8.500 | 0.23 | 9.17 | 0.59 | 1.375 | 3.12 | 1.52 | 0.312 | 21.76 | 7.90 |
| **250TC** | 7.25 | 8.500 | 0.23 | 9.17 | 0.59 | 1.625 | 3.75 | 1.80 | 0.375 | 21.76 | 7.90 |


Send Quote Requests to info@automatedpt.com
Call +1(800)985-6929 To Order or Order Online At Nordgearmotors.com

# SK 43125 + Motor

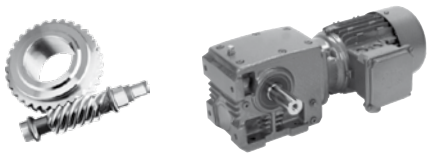

## SK 43125

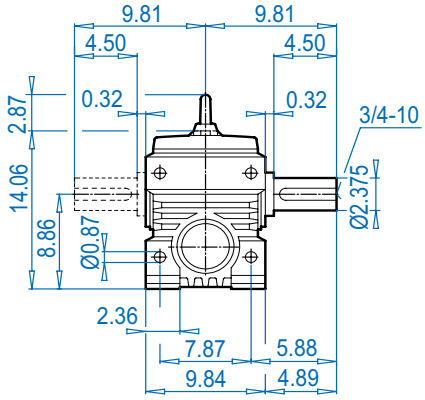


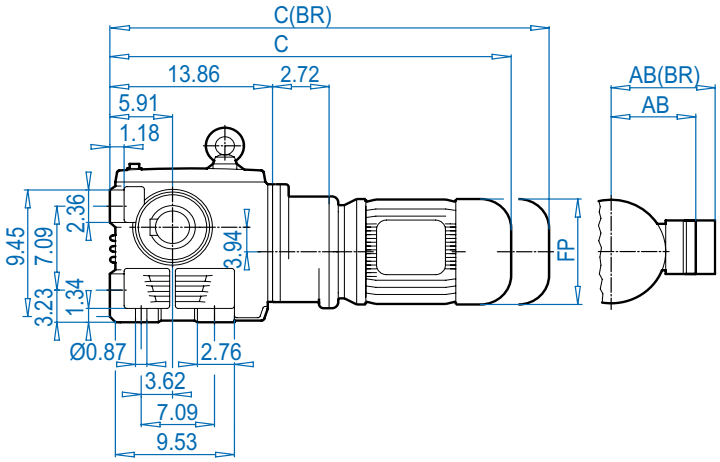


## SK 43125VF

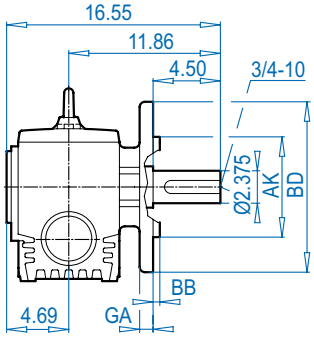


## SK 43125AF

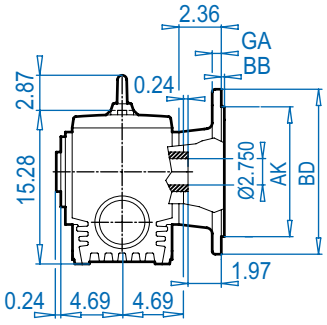


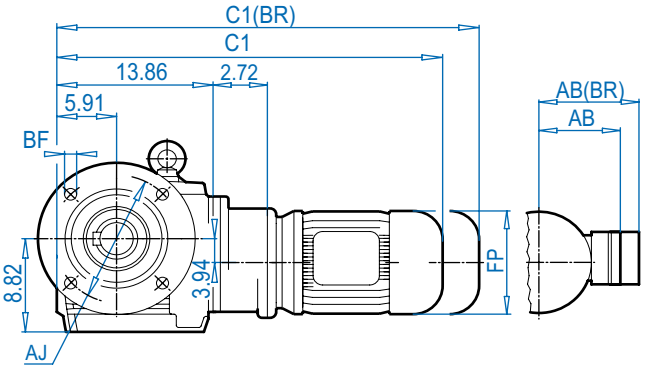


## SK 43125V

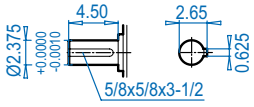


## SK 43125AF

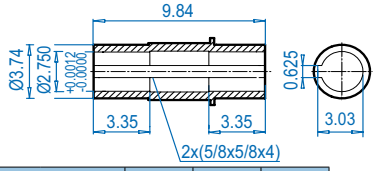


## SK 43125AFB ⇨📖 672

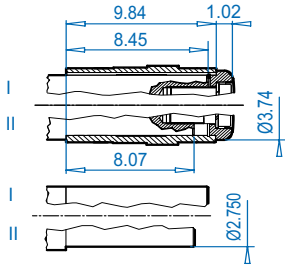


### Mounting flange

| Type | BD (mm) | AJ | AK | BB | BF | GA |
|---|---|---|---|---|---|---|
| SK 42125VF | 13.78 (350) | 11.81 | 9.843 + 0.0000 - 0.0011 | 0.20 | 0.71 | 0.79 |
| SK 42125AF | 15.75 (400) | 13.78 | 11.811 + 0.0000 - 0.0013 | 0.20 | 0.71 | 0.79 |
| SK 42125AF | 17.72 (450) | 15.75 | 13.779 + 0.0000 - 0.0014 | 0.20 | 0.71 | 0.87 |

### Motor dimensions

| Standard efficiency | 71S/L | 80S/L | 90S/L | 100L | | | For Other Connection Possibilities please see ⇨📖 666 & 667 |
|---|---|---|---|---|---|---|---|
| Energy efficiency | | 80LH | 90SH/LH | 100LH | | | |
| AB | 4.88 | 5.59 | 5.79 | 6.65 | | | |
| AB (BR) | 5.24 | 5.63 | 5.83 | 6.26 | | | |
| C1 | 25.67 | 26.65 | 28.27 | 29.44 | | | |
| C1 (BR) | 27.95 | 29.17 | 31.22 | 33.03 | | | |
| C | 25.67 | 26.65 | 28.27 | 29.44 | | | |
| C (BR) | 27.95 | 29.17 | 31.22 | 33.03 | | | |
| FP | 5.71 | 6.50 | 7.20 | 7.91 | | | |

**(BR)** denotes Brakemotor

DIMENSIONS
Dimensions in Inches
ALTERNATE SHAFTS SEE PAGES 669 - 671


Send Quote Requests to info@automatedpt.com
Call +1(800)985-6929 To Order or Order Online At Nordgearmotors.com

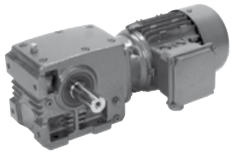

# SK 43125 + Motor

## SK 43125AZ

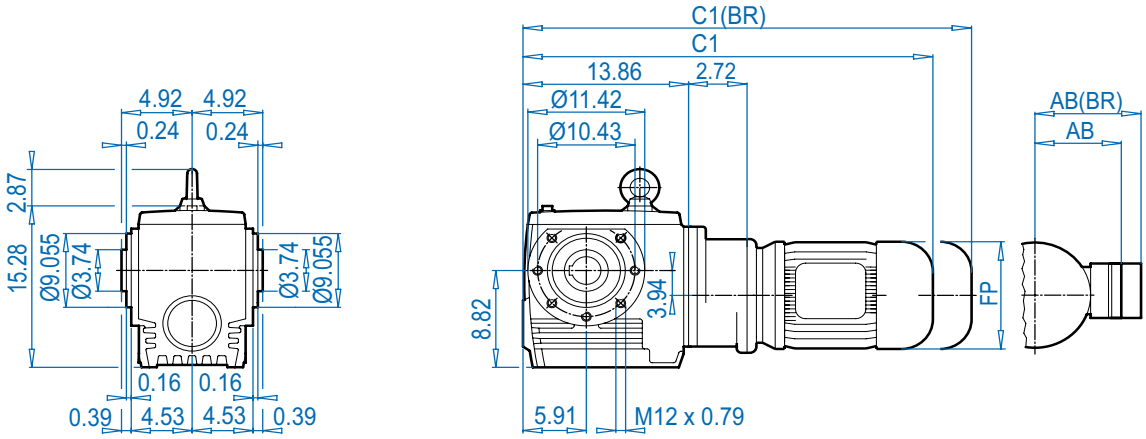


## SK 43125AZ**D**

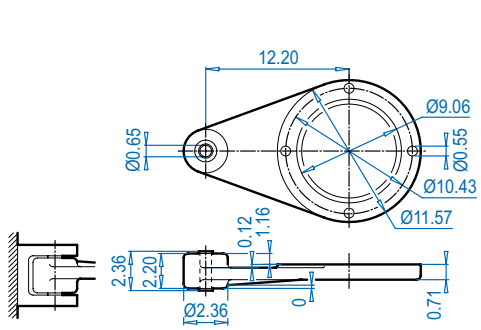


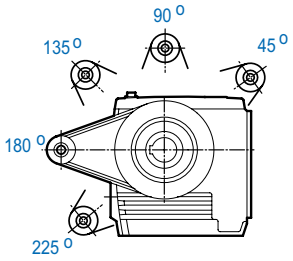


## SK 43125AZ**SH**

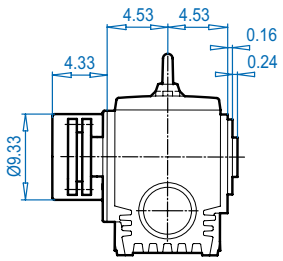


Dimensions in Inches
DIMENSIONS

## SK 43125AZ

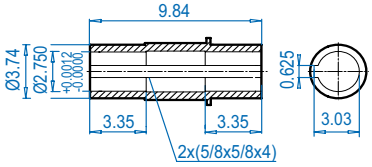


## SK 43125AZ**B** ⇨🕮 672

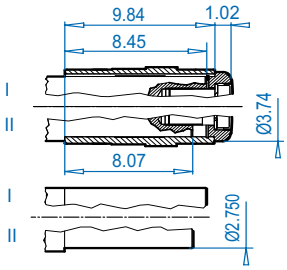


## SK 43125AZ**S** ⇨🕮 671

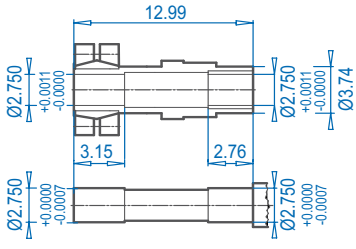


ALTERNATE SHAFTS SEE PAGES 669 - 671

**Motor dimensions**

| Standard efficiency | 71S/L | 80S/L | 90S/L | 100L | | | For Other Connection Possibilities please see ⇨🕮 666 & 667 |
|---|---|---|---|---|---|---|---|
| Energy efficiency | | 80LH | 90SH/LH | 100LH | | | |
| AB | 4.88 | 5.59 | 5.79 | 6.65 | | | 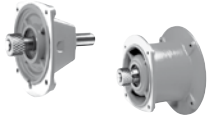 |
| AB (BR) | 5.24 | 5.63 | 5.83 | 6.26 | | | |
| C1 | 25.67 | 26.65 | 28.27 | 29.44 | | | |
| C1 (BR) | 27.95 | 29.17 | 31.22 | 33.03 | | | |
| FP | 5.71 | 6.50 | 7.20 | 7.91 | | | |

**(BR)** denotes Brakemotor


Send Quote Requests to info@automatedpt.com
Call +1(800)985-6929 To Order or Order Online At Nordgearmotors.com

# SK 43125 + NEMA





## SK 43125

## NEMA Input

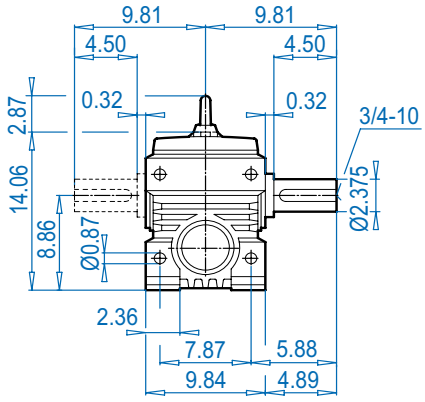


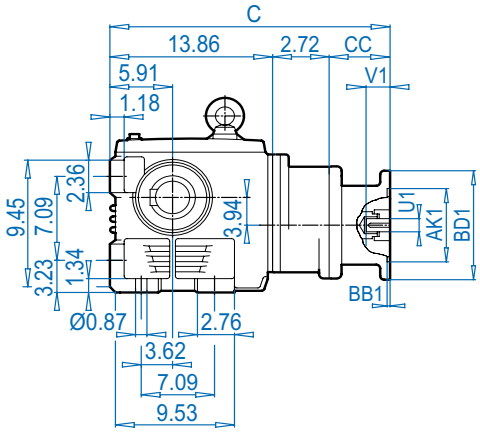


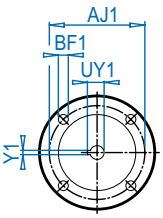


## SK 43125VF

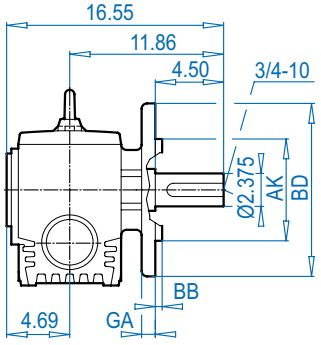


## SK 43125AF

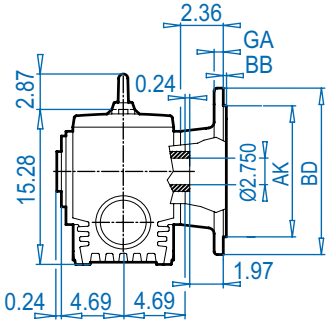


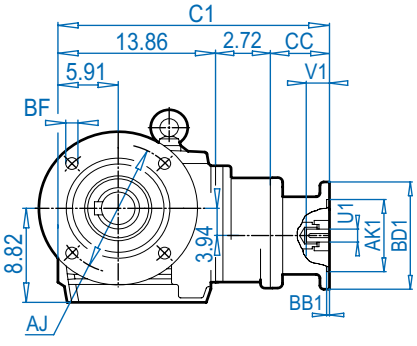


## SK 43125V

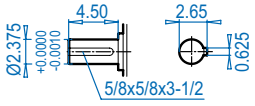


## SK 43125AF

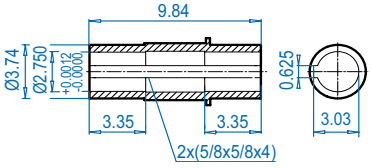


## SK 43125AFB ⇨🕮 672

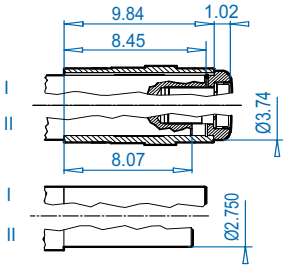


### Mounting flange

| Type | BD (mm) | AJ | AK | BB | BF | GA |
|---|---|---|---|---|---|---|
| SK 43125VF | 13.78 (350) | 11.81 | 9.843 $^{+0.0000}_{-0.0011}$ | 0.20 | 0.71 | 0.79 |
| SK 43125AF | 15.75 (400) | 13.78 | 11.811 $^{+0.0000}_{-0.0013}$ | 0.20 | 0.71 | 0.79 |
| SK 43125AF | 17.72 (450) | 15.75 | 13.779 $^{+0.0000}_{-0.0014}$ | 0.20 | 0.71 | 0.87 |

### NEMA Dimensions

| Type | AJ1 | AK1 | BB1 | BD1 | BF1 | U1 | V1 | UY1 | Y1 | C | C1 | CC |
|---|---|---|---|---|---|---|---|---|---|---|---|---|
| 56C | 5.88 | 4.500 | 0.18 | 6.54 | 0.43 | 0.625 | 2.06 | 0.71 | 0.188 | 21.18 | 21.18 | 4.60 |
| 140TC | 5.88 | 4.500 | 0.18 | 6.54 | 0.43 | 0.875 | 2.12 | 0.96 | 0.188 | 21.18 | 21.18 | 4.60 |
| 180TC | 7.25 | 8.500 | 0.23 | 9.17 | 0.59 | 1.125 | 2.62 | 1.24 | 0.250 | 23.18 | 23.18 | 6.60 |

DIMENSIONS
Dimensions in Inches
ALTERNATE SHAFTS SEE PAGES 669 - 671


Send Quote Requests to info@automatedpt.com
Call +1(800)985-6929 To Order or Order Online At Nordgearmotors.com

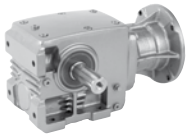


# SK 43125 + NEMA

## SK 43125AZ

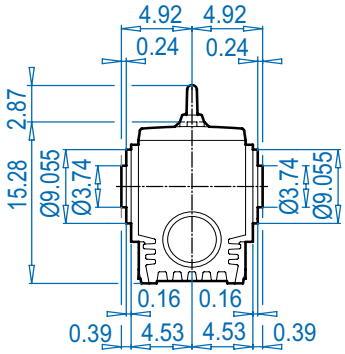


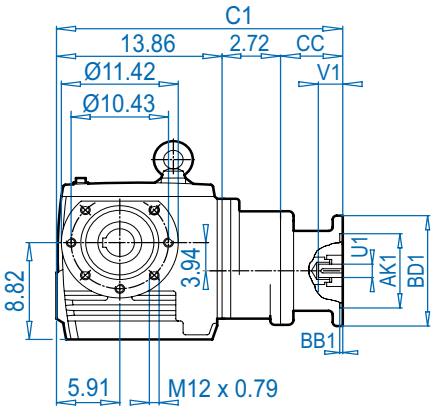


## NEMA Input

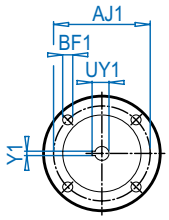


## SK 43125AZ**D**

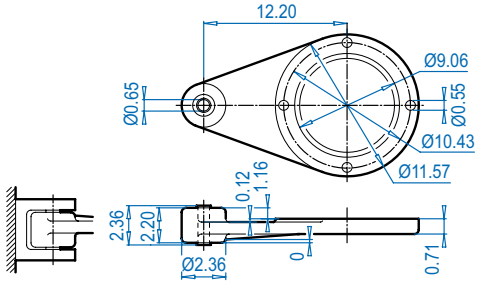


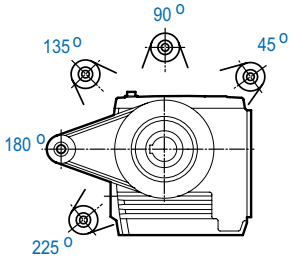


## SK 43125AZ**SH**

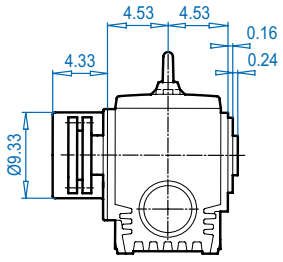


Dimensions in Inches
DIMENSIONS

## SK 43125AZ

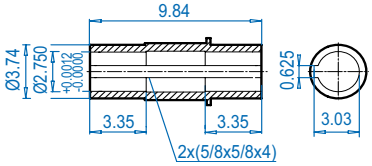


## SK 43125AZ**B** ⇨🕮 672

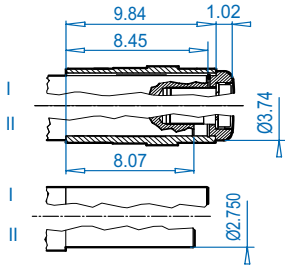


## SK 43125AZ**S** ⇨🕮 671

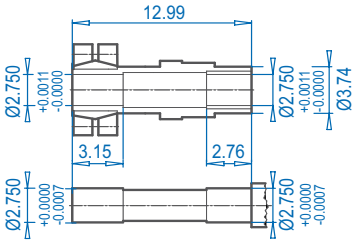


ALTERNATE SHAFTS SEE PAGES 669 - 671

**NEMA Dimensions**

| Type | AJ1 | AK1 | BB1 | BD1 | BF1 | U1 | V1 | UY1 | Y1 | C1 | CC |
|---|---|---|---|---|---|---|---|---|---|---|---|
| **56C** | 5.88 | 4.500 | 0.18 | 6.54 | 0.43 | 0.625 | 2.06 | 0.71 | 0.188 | 21.18 | 4.60 |
| **140TC** | 5.88 | 4.500 | 0.18 | 6.54 | 0.43 | 0.875 | 2.12 | 0.96 | 0.188 | 21.18 | 4.60 |
| **180TC** | 7.25 | 8.500 | 0.23 | 9.17 | 0.59 | 1.125 | 2.62 | 1.24 | 0.250 | 23.18 | 6.60 |


Send Quote Requests to info@automatedpt.com
Call +1(800)985-6929 To Order or Order Online At Nordgearmotors.com

# Solid Input Shaft
# Type - W





DRIVESYSTEMS

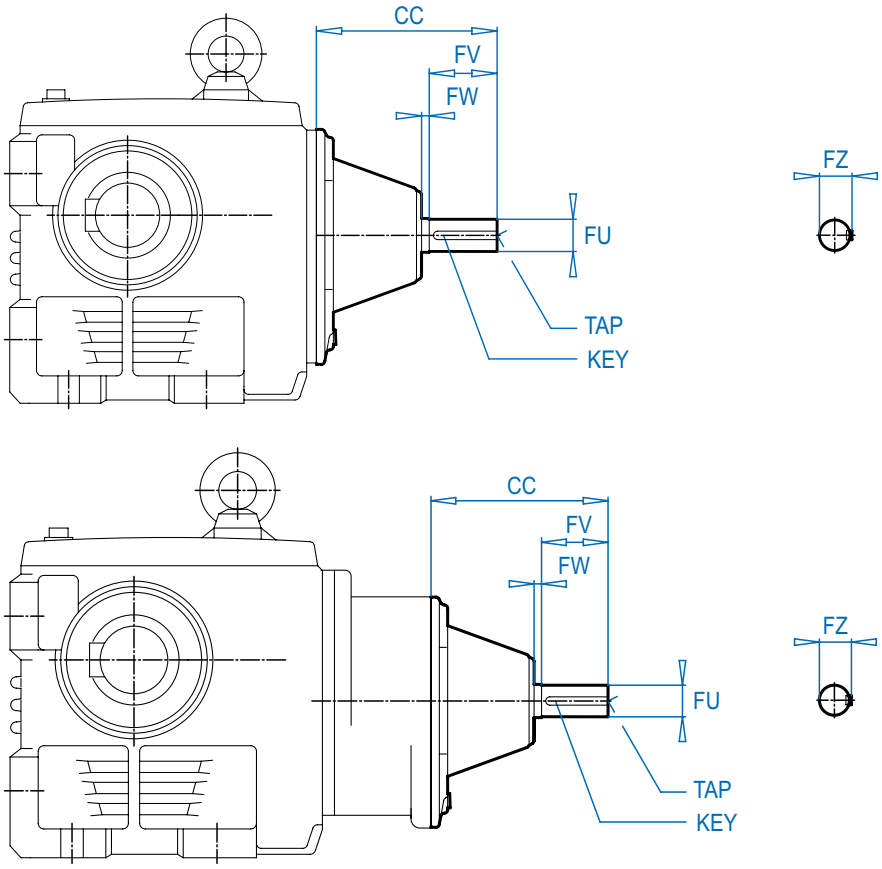


DIMENSIONS
Dimensions in Inches

| Unit | CC | FW | FV | FU | FZ | TAP | KEY | Unit Dimensions |
|---|---|---|---|---|---|---|---|---|
| **SK 02040** | 4.30 | 0.20 | 1.57 | 0.625 +0.0000 -0.0005 | 0.70 | 1/4-20 | $^{3}/_{16}$ x $^{3}/_{16}$ x 1-$^{1}/_{4}$ | ⇨🕮 622 |
| **SK 02050**<br>**SK 13050** | 4.80 | 0.35 | 1.50 | 0.625 +0.0000 -0.0005 | 0.70 | 1/4-20 | $^{3}/_{16}$ x $^{3}/_{16}$ x 1-$^{1}/_{4}$ | ⇨🕮 626<br>⇨🕮 626 |
| **SK 12063**<br>**SK 13063** | 4.80 | 0.35 | 1.50 | 0.625 +0.0000 -0.0005 | 0.70 | 1/4-20 | $^{3}/_{16}$ x $^{3}/_{16}$ x 1-$^{1}/_{4}$ | ⇨🕮 634<br>⇨🕮 638 |
| **SK 12080**<br>**SK 13080** | 4.80 | 0.35 | 1.50 | 0.625 +0.0000 -0.0005 | 0.70 | 1/4-20 | $^{3}/_{16}$ x $^{3}/_{16}$ x 1-$^{1}/_{4}$ | ⇨🕮 642<br>⇨🕮 646 |
| **SK 32100**<br>**SK 33100** | 6.75<br>4.80 | 0.28<br>0.35 | 2.00<br>1.50 | 0.875 +0.0000 -0.0005<br>0.625 +0.0000 -0.0005 | 0.96<br>0.70 | 1/4-20<br>1/4-20 | $^{3}/_{16}$ x $^{3}/_{16}$ x 1-$^{5}/_{8}$<br>$^{3}/_{16}$ x $^{3}/_{16}$ x 1-$^{1}/_{4}$ | ⇨🕮 650<br>⇨🕮 654 |
| **SK 42125**<br>**SK 43125** | 8.39<br>6.75 | 0.35<br>0.28 | 3.12<br>2.00 | 1.500 +0.0000 -0.0005<br>0.875 +0.0000 -0.0005 | 1.66<br>0.96 | 5/8-11<br>1/4-20 | $^{3}/_{8}$ x $^{3}/_{8}$ x 2-$^{1}/_{2}$<br>$^{3}/_{16}$ x $^{3}/_{16}$ x 1-$^{5}/_{8}$ | ⇨🕮 658<br>⇨🕮 662 |


Send Quote Requests to info@automatedpt.com
Call +1(800)985-6929 To Order or Order Online At Nordgearmotors.com




# IEC Inputs

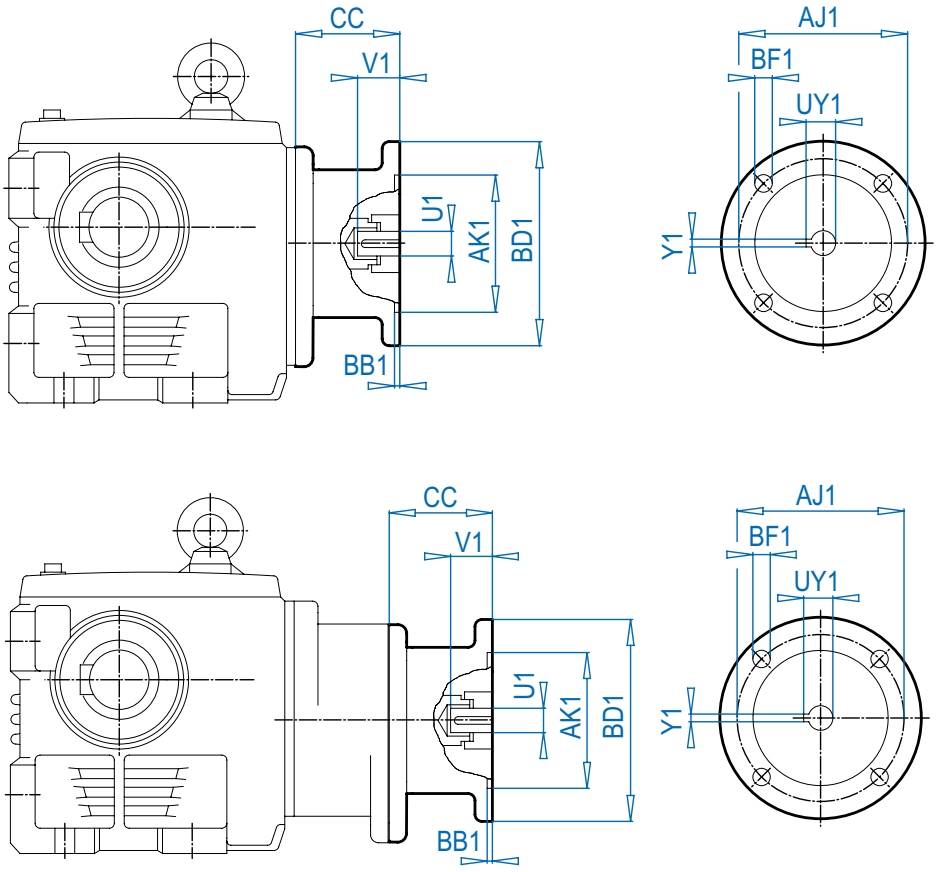




**IEC Dimensions (mm)**

| Input | AJ1 | AK1 | BB1 | BD1 | BF1 | U1 | V1 | UY1 | Y1 |
|---|---|---|---|---|---|---|---|---|---|
| **IEC 63** | 115 | 95 | 3.5 | 140 | M8 | 11 | 23 | 12.8 | 4 |
| **IEC 71** | 130 | 110 | 4.0 | 160 | M8 | 14 | 30 | 16.3 | 5 |
| **IEC 80** | 165 | 130 | 4.0 | 200 | M10 | 19 | 40 | 21.8 | 6 |
| **IEC 90** | 165 | 130 | 4.0 | 200 | M10 | 24 | 50 | 27.3 | 8 |
| **IEC 100** | 215 | 180 | 5.0 | 250 | M12 | 28 | 60 | 31.3 | 8 |
| **IEC 112** | 215 | 180 | 5.0 | 250 | M12 | 28 | 60 | 31.3 | 8 |
| **IEC 132** | 265 | 230 | 5.0 | 300 | M12 | 38 | 80 | 41.3 | 10 |
| **IEC 160** | 300 | 250 | 6.0 | 350 | M16 | 42 | 110 | 45.3 | 12 |

**CC Dimensions**

| Unit | IEC63 | IEC 71 | IEC 80 | IEC 90 | IEC 100 | IEC 112 | IEC 132 | IEC 160 |
|---|---|---|---|---|---|---|---|---|
| **SK 02040** | 3.35 | 3.35 | 4.06 | 4.06 | - | - | - | - |
| **SK 02050** | 3.35 | 3.35 | 4.13 | 4.13 | 5.12 | 5.12 | - | - |
| **SK 13050** | 3.35 | 3.35 | 4.13 | 4.13 | 5.12 | 5.12 | - | - |
| **SK 12063** | 3.35 | 3.35 | 4.13 | 4.13 | 5.12 | 5.12 | - | - |
| **SK 13063** | 3.35 | 3.35 | 4.13 | 4.13 | 5.12 | 5.12 | - | - |
| **SK 12080** | 3.35 | 3.35 | 4.13 | 4.13 | 5.12 | 5.12 | - | - |
| **SK 13080** | 3.35 | 3.35 | 4.13 | 4.13 | 5.12 | 5.12 | - | - |
| **SK 32100** | - | 3.46 | 4.21 | 4.21 | 4.88 | 4.88 | 6.14 | - |
| **SK 33100** | 3.35 | 3.35 | 4.13 | 4.13 | 5.12 | 5.12 | - | - |
| **SK 42125** | - | - | - | 4.29 | 5.24 | 5.24 | 7.48 | 7.64 |
| **SK 43125** | - | 3.46 | 4.21 | 4.21 | 4.88 | 4.88 | 6.14 | - |


Send Quote Requests to info@automatedpt.com
Call +1(800)985-6929 To Order or Order Online At Nordgearmotors.com

# B14 Flange & Protection Covers



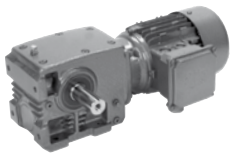

DRIVESYSTEMS

## SK 02050AZ - SK 33100AZ

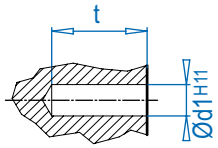


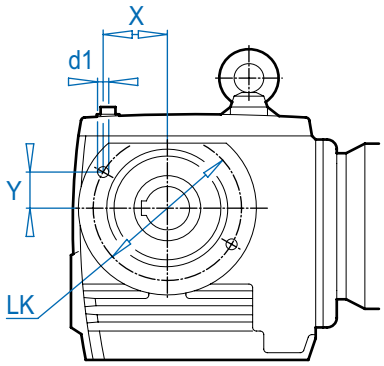


## SK 42125AZ
## SK 43125AZ

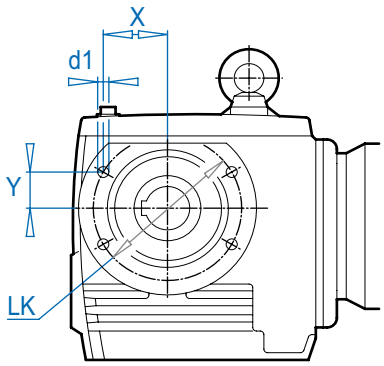


**Type** **Outline dimensions**

| | $d1^{H11}$ x t (mm) | LK | X | Y |
|---|---|---|---|---|
| SK 02050 AZ<br>SK 13050 AZ | Ø 8 x 12 | 4.528 | 2.210 | 0.490 |
| SK 12063 AZ<br>SK 13063 AZ | Ø 8 x 12 | 4.528 | 2.210 | 0.490 |
| SK 12080 AZ<br>SK 13080 AZ | Ø 10 x 15 | 6.496 | 3.171 | 0.703 |
| SK 32100 AZ<br>SK 33100 AZ | Ø 12 x 20 | 8.465 | 4.132 | 0.916 |
| SK 42125 AZ<br>SK 43125 AZ | Ø 12 x 20 | 10.433 | 4.400 | 2.803 |

DIMENSIONS
Dimensions in Inches

## SK ... AZH

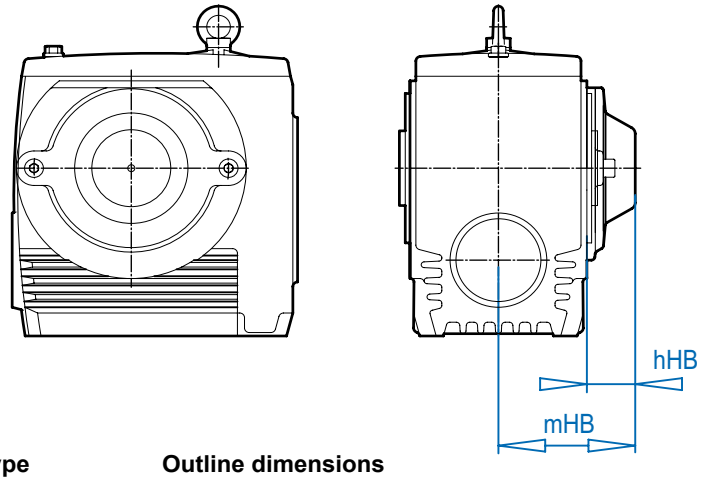


**Type** **Outline dimensions**

| | hHB | mHB |
|---|---|---|
| SK 02050 AZH<br>SK 13050 AZH | 1.46 | 3.82 |
| SK 12063 AZH<br>SK 13063 AZH | 1.46 | 4.09 |
| SK 12080 AZH<br>SK 13080 AZH | 1.61 | 4.57 |
| SK 32100 AZH<br>SK 33100 AZH | 1.93 | 5.55 |
| SK 42125 AZH<br>SK 43125 AZH | 2.09 | 6.61 |

## SK ... AZH66

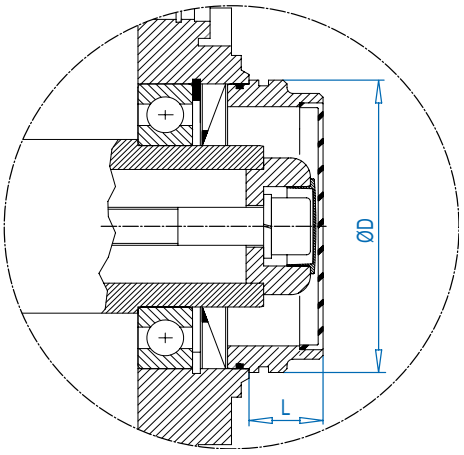


**Type**

| | ØD | L |
|---|---|---|
| SK 02050 AZH66<br>SK 13050 AZH66 | 3.15 | 0.98 |
| SK 12063 AZH66<br>SK 13063 AZH66 | 3.35 | 1.10 |
| SK 12080 AZH66<br>SK 13080 AZH66 | 4.09 | 1.38 |
| SK 32100 AZH66<br>SK 33100 AZH66 | 5.32 | 1.57 |
| SK 42125 AZH66<br>SK 43125 AZH66 | 5.91 | 1.57 |

Send Quote Requests to info@automatedpt.com
Call +1(800)985-6929 To Order or Order Online At Nordgearmotors.com



## Solid Shaft Dimensions

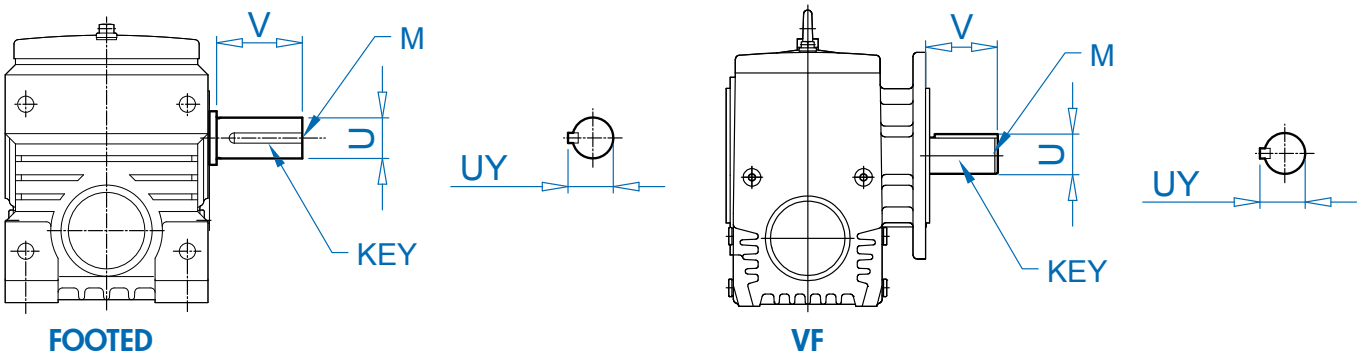


| TYPE | U | DIAMETER TOLERANCE | V | UY | KEY SIZE w x h x l | KEY QTY | DRILL & TAP M |
|---|---|---|---|---|---|---|---|
| **SK 02040** | 0.750 | +0.0000 / -0.0005 | 1.57 | 0.83 | 3/16 x 3/16 x 1 | 1 | 1/4-20 |
| | 20mm | +0.015 / +0.002mm | 40mm | 22.5mm | 6 x 6 x 32mm | 1 | M6 |
| **SK 02050** | 1.000 | +0.0000 / -0.0005 | 2.13 | 1.11 | 1/4 x 1/4 x 1-5/8 | 1 | 3/8-16 |
| **SK 13050** | 25mm | +0.015 / +0.002mm | 50mm | 28mm | 8 x 7 x 40mm | 1 | M10 |
| **SK 12063** | 1.250 | +0.0000 / -0.0005 | 2.75 | 1.36 | 1/4 x 1/4 x 2-1/4 | 1 | 1/2-13 |
| **SK 13063** | 30mm | +0.015 / +0.002mm | 60mm | 33mm | 8 x 7 x 50mm | 1 | M10 |
| **SK 12080** | 1.375 | +0.0000 / -0.0005 | 2.75 | 1.51 | 5/16 x 5/16 x 2-1/8 | 1 | 5/8-11 |
| **SK 13080** | 35mm | +0.018 / +0.002mm | 70mm | 38mm | 10 x 8 x 60mm | 1 | M12 |
| **SK 32100** | 1.875 | +0.0000 / -0.0010 | 3.50 | 2.09 | 1/2 x 1/2 x 2-3/4 | 1 | 5/8-11 |
| **SK 33100** | 45mm | +0.018 / +0.002mm | 90mm | 48.5mm | 14 x 9 x 80mm | 1 | M16 |
| **SK 42125** | 2.375 | +0.0000 / -0.0010 | 4.50 | 2.65 | 5/8 x 5/8 x 3-1/2 | 1 | 3/4-10 |
| **SK 43125** | 60mm | +0.030 / +0.011mm | 120mm | 64mm | 18 x 11 x 110mm | 1 | M20 |

- Dimensions are in inches unless otherwise noted.
- Metric Keys are captured in keyways.
- For shaft sizes not shown, consult NORD.

Dimensions in Inches
DIMENSIONS
ALTERNATE SHAFTS SEE PAGES 669 - 671


Send Quote Requests to info@automatedpt.com
Call +1(800)985-6929 To Order or Order Online At Nordgearmotors.com

# Hollow Shaft Dimensions

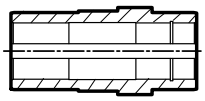

## Hollow Shaft Dimensions (AZ-AF)

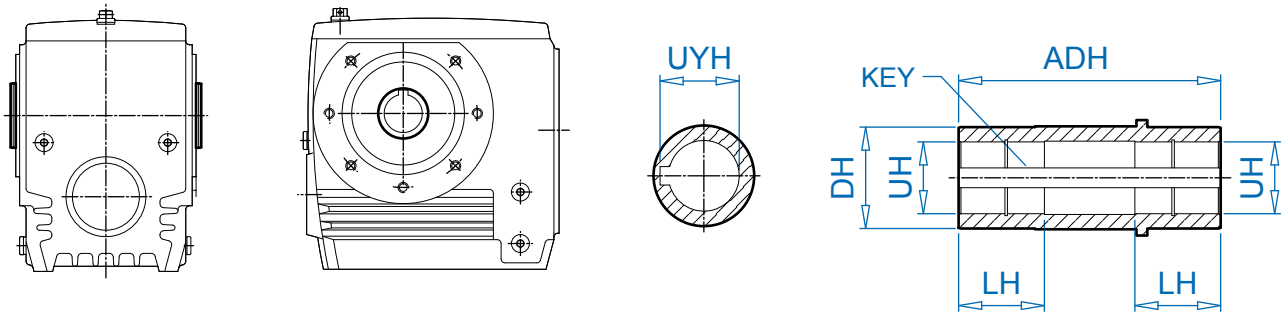


| TYPE | UH | DIAMETER TOLERANCE | ADH | LH | DH | UYH | KEY SIZE w x h x l | KEY QTY |
|---|---|---|---|---|---|---|---|---|
| **SK 02040 AZ/AF** | 0.750* | +0.0010 / -0.0000 | 4.72 | 1.10 | 1.38 | 0.84 | 3/16 x 3/16 x 1 | 2 |
| | 20mm | +0.021 / -0.000mm | 120mm | 28mm | 35mm | 22.8mm | 6 x 6 x 25mm | 2 |
| **SK 02050 AZ/AF** | 1.1875* | +0.0010 / -0.0000 | 5.20 | 1.77 | 1.77 | 1.31 | 1/4 x 1/4 x 1-5/8 | 2 |
| **SK 13050 AZ/AF** | 1.250 | +0.0010 / -0.0000 | 5.20 | 1.77 | 1.77 | 1.37 | 1/4 x 1/4 x 1-5/8 | 2 |
| | 1.000 | +0.0010 / -0.0000 | 5.20 | 1.77 | 1.77 | 1.11 | 1/4 x 1/4 x 1-5/8 | 2 |
| | 25mm | +0.021 / -0.000mm | 132mm | 45mm | 45mm | 28.3mm | 8 x7 x 40mm | 2 |
| | 30mm | +0.021 / -0.000mm | 132mm | 45mm | 45mm | 33.3mm | 8 x7 x 40mm | 2 |
| **SK 12063 AZ/AF** | 1.4375* | +0.0010 / -0.0000 | 5.83 | 1.97 | 1.97 | 1.54 | 3/8 x 1/4 x 2 | 2 |
| **SK 13063 AZ/AF** | 1.375 | +0.0010 / -0.0000 | 5.83 | 1.97 | 1.97 | 1.52 | 5/16 x 5/16 x 2-1/8 | 2 |
| | 30mm | +0.021 / -0.000mm | 148mm | 50mm | 50mm | 33.3mm | 8 x 7 x 40mm | 2 |
| | 35mm | +0.025 / -0.000mm | 148mm | 50mm | 50mm | 38.3mm | 10 x 8 x 42mm | 2 |
| **SK 12080 AZ/AF** | 1.8125* | +0.0012 / -0.0000 | 6.61 | 2.17 | 2.56 | 1.97 | 1/2 x 3/8 x 2-5/8 | 2 |
| **SK 13080 AZ/AF** | 1.750 | +0.0012 / -0.0000 | 6.61 | 2.17 | 2.56 | 1.92 | 3/8 x 3/8 x 2-1/2 | 2 |
| | 1.500 | +0.0010 / -0.0000 | 6.61 | 2.17 | 2.56 | 1.67 | 3/8 x 3/8 x 2-1/2 | 2 |
| | 1.4375 | +0.0010 / -0.0000 | 6.61 | 2.17 | 2.56 | 1.61 | 3/8 x 3/8 x 2-1/2 | 2 |
| | 40mm | +0.025 / -0.000mm | 168mm | 55mm | 65mm | 43.3mm | 12 x 8 x 50mm | 2 |
| | 45mm | +0.025 / -0.000mm | 168mm | 55mm | 65mm | 48.8mm | 14 x 9 x 70mm | 2 |
| **SK 32100 AZ/AF** | 2.4375* | +0.0012 / -0.0000 | 7.95 | 2.76 | 3.35 | 2.62 | 5/8 x 7/16 x 2-7/8 | 2 |
| **SK 33100 AZ/AF** | 2.375 | +0.0012 / -0.0000 | 7.95 | 2.76 | 3.35 | 2.65 | 5/8 x 5/8 x 2-1/4 | 2 |
| | 2.000 | +0.0012 / -0.0000 | 7.95 | 2.76 | 3.35 | 2.22 | 1/2 x 1/2 x 2-3/4 | 2 |
| | 50mm | +0.025 / -0.000mm | 202mm | 70mm | 85mm | 53.8mm | 14 x 9 x 70mm | 2 |
| | 60mm | +0.030 / -0.000mm | 202mm | 70mm | 85mm | 64.4mm | 18 x 11 x 70mm | 2 |
| **SK 42125 AZ/AF** | 2.750* | +0.0012 / -0.0000 | 9.84 | 3.35 | 3.74 | 3.03 | 5/8 x 5/8 x 4 | 2 |
| **SK 43125 AZ/AF** | 2.375 | +0.0012 / -0.0000 | 9.84 | 3.35 | 3.74 | 2.65 | 5/8 x 5/8 x 4 | 2 |
| | 2.9375 | +0.0012 / -0.0000 | 9.84 | 3.35 | 3.74 | 3.14 | 3/4 x 1/2 x 4 | 2 |
| | 60mm | +0.030 / -0.000mm | 250mm | 89mm | 89mm | 64.4mm | 18 x 11 x 70mm | 2 |
| | 70mm | +0.030 / -0.000mm | 250mm | 89mm | 89mm | 74.9mm | 20 x 12 x 90mm | 2 |

* standard size

- All dimensions are in inches unless otherwise noted.
- For bore sizes not shown consult NORD.

DIMENSIONS
Dimensions in Inches
ALTERNATE SHAFTS SEE PAGES 669 - 671

Send Quote Requests to info@automatedpt.com
Call +1(800)985-6929 To Order or Order Online At Nordgearmotors.com



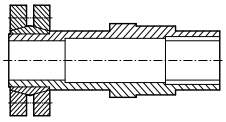

# Shrink Disc Shaft Dimensions

## Shrink Disc Shaft Dimensions (AZSH)

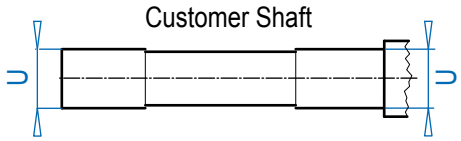


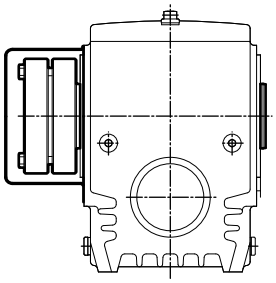

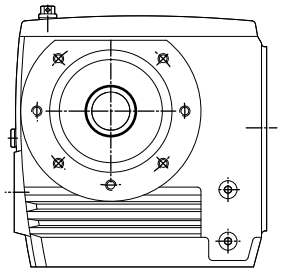

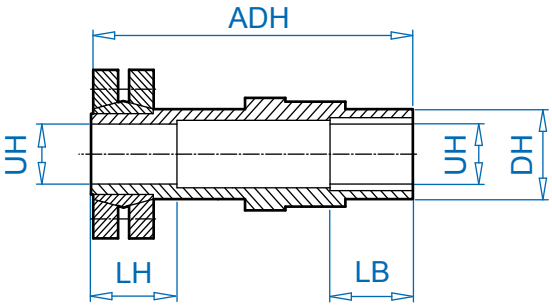


| Type | HOLLOW SHAFT | | ADH | LB | LH | DH | CUSTOMER SHAFT | |
|---|---|---|---|---|---|---|---|---|
| | UH | TOLERANCE | | | | | U | TOLERANCE |
| **SK 02050 AZSH** | 1.250 | +0.0009 / -0.0000 | 6.89 | 1.24 | 1.57 | 1.77 | 1.250 | +0.0000 / -0.0006 |
| **SK 13050 AZSH** | 25mm | +0.021 / -0.000mm | 170mm | 31.5mm | 35mm | 45mm | 25mm | +0.000 / -0.013mm |
| | 30mm | +0.021 / -0.000mm | 175mm | 31.5mm | 40mm | 45mm | 30mm | +0.000 / -0.013mm |
| **SK 12063 AZSH** | 1.4375 | +0.0009 / -0.0000 | 7.68 | 1.57 | 1.77 | 1.97 | 1.4375 | +0.0000 / -0.0006 |
| **SK 13063 AZSH** | 30mm | +0.021 / -0.000mm | 190mm | 31.5mm | 40mm | 50mm | 30mm | +0.000 / -0.013mm |
| | 35mm | +0.025 / -0.000mm | 195mm | 41.5mm | 45mm | 50mm | 35mm | +0.000 / -0.016mm |
| **SK 12080 AZSH** | 1.750 | +0.0009 / -0.0000 | 8.66 | 1.57 | 1.97 | 2.56 | 1.750 | +0.0000 / -0.0006 |
| **SK 13080 AZSH** | 40mm | +0.025 / -0.000mm | 220mm | 41.5mm | 50mm | 65mm | 40mm | +0.000 / -0.016mm |
| | 45mm | +0.025 / -0.000mm | 220mm | 41.5mm | 50mm | 65mm | 45mm | +0.000 / -0.016mm |
| **SK 32100 AZSH** | 2.4375 | +0.0011 / -0.0000 | 10.43 | 2.36 | 2.76 | 3.35 | 2.4375 | +0.0000 / -0.0007 |
| **SK 33100 AZSH** | 60mm | +0.030 / -0.000mm | 265mm | 61.5mm | 70mm | 85mm | 60mm | +0.000 / -0.019mm |
| | 50mm | +0.025 / -0.000mm | 255mm | 51.5mm | 55mm | 85mm | 50mm | +0.000 / -0.016mm |
| **SK 42125 AZSH** | 2.750 | +0.0011 / -0.0000 | 12.99 | 2.76 | 3.15 | 3.74 | 2.750 | +0.0000 / -0.0007 |
| **SK 43125 AZSH** | 70mm | +0.030 / -0.000mm | 330mm | 71.5mm | 80mm | 95mm | 70mm | +0.000 / -0.019mm |
| | 60mm | +0.030 / -0.000mm | 315mm | 61.5mm | 60mm | 95mm | 60mm | +0.000 / -0.019mm |



ALTERNATE SHAFTS SEE PAGES 669 - 671



Send Quote Requests to info@automatedpt.com
Call +1(800)985-6929 To Order or Order Online At Nordgearmotors.com

# Fixing Element Kit

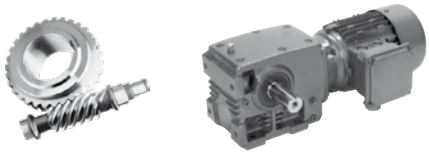

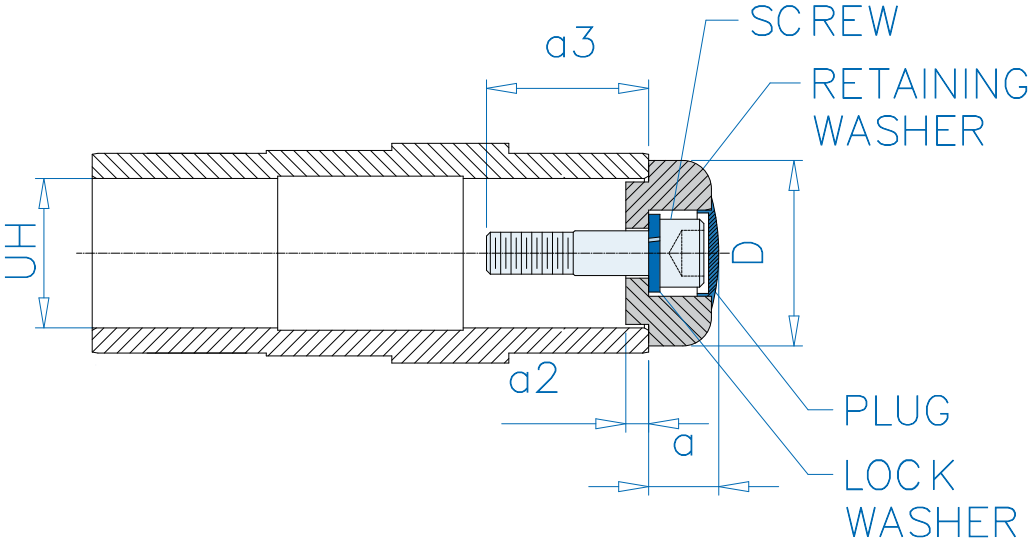


DIMENSIONS
Dimensions in Inches

**Inch Shaft Hollow Bore (in)**

| UH | D | a | a2 | Screw ❶ | a3 ❶ | Screw ❷ | a3 ❷ | Screw ❸ | a3 ❸ |
|---|---|---|---|---|---|---|---|---|---|
| 0.7500 | 1.181 | 0.557 | 0.118 | 1/4 - 20 x 3/4 | 0.652 | 1/4 - 20 x 1 | 0.902 | - | - |
| 1.0000 | 1.496 | 0.767 | 0.150 | 3/8 - 16 x 3/4 | 0.624 | 3/8 - 16 x 1-1/4 | 1.124 | - | - |
| 1.1875 | 1.575 | 0.769 | 0.150 | 7/16 - 14 x 2-1/16 | 2.016 | - | - | - | - |
| 1.2500 | 1.575 | 0.769 | 0.150 | 7/16 - 14 x 2-1/16 | 2.016 | - | - | - | - |
| 1.3750 | 1.772 | 0.946 | 0.197 | 5/8 - 11 x 1-1/2 | 1.461 | 5/8 - 11 x 2-1/4 | 2.211 | 5/8 - 11 x 1 | 0.961 |
| 1.4375 | 1.772 | 0.946 | 0.197 | 5/8 - 11 x 1-1/2 | 1.461 | 5/8 - 11 x 2-1/4 | 2.211 | 5/8 - 11 x 1 | 0.961 |
| 1.5000 | 1.772 | 0.946 | 0.315 | 5/8 - 11 x 1-1/2 | 1.461 | 5/8 - 11 x 2-1/4 | 2.211 | 5/8 - 11 x 1 | 0.961 |
| 1.7500 | 2.165 | 0.927 | 0.315 | 5/8 - 11 x 2 | 2.000 | 5/8 - 11 x 1-1/2 | 1.500 | - | - |
| 1.8125 | 2.362 | 0.966 | 0.315 | 5/8 - 11 x 2-1/4 | 2.250 | - | - | - | - |
| 2.0000 | 2.559 | 0.971 | 0.315 | 5/8 - 11 x 2-1/4 | 2.250 | - | - | - | - |
| 2.3750 | 2.953 | 1.129 | 0.354 | 3/4 - 10 x 2-1/2 | 2.500 | - | - | - | - |
| 2.4375 | 2.953 | 1.129 | 0.354 | 3/4 - 10 x 2-1/2 | 2.500 | - | - | - | - |
| 2.7500 | 3.740 | 1.132 | 0.354 | 3/4 - 10 x 2-1/2 | 2.500 | - | - | - | - |
| 2.9375 | 3.740 | 1.132 | 0.354 | 3/4 - 10 x 2-1/2 | 2.500 | - | - | - | - |

**Metric Shaft Hollow Bore (mm)**

| UH | D | a | a2 | Screw ❶ | a3 ❶ | Screw ❷ | a3 ❷ |
|---|---|---|---|---|---|---|---|
| 20 | 30 | 14 | 3 | M6 x 30 | 27.5 | M6 x 22 | 19.5 |
| 25 | 38 | 19 | 3.8 | M10 x 45 | 41.8 | M10 x 30 | 26.8 |
| 30 | 40 | 19 | 3.8 | M10 x 45 | 43.8 | M10 x 30 | 28.8 |
| 35 | 45 | 23.5 | 5 | M12 x 55 | 54 | M12 x 35 | 34 |
| 40 | 55 | 24 | 8 | M16 x 70 | 70 | M16 x 45 | 45 |
| 45 | 60 | 25 | 8 | M16 x 70 | 70 | M16 x 45 | 45 |
| 50 | 65 | 25 | 8 | M16 x 70 | 70 | M16 x 45 | 45 |
| 60 | 75 | 29 | 9 | M20 x 90 | 90 | M20 x 55 | 55 |
| 70 | 95 | 29 | 9 | M20 x 90 | 90 | M20 x 55 | 55 |

❶, ❷, ❸ - Each fixing element kit may contain up to 3 different kinds of screws

Send Quote Requests to info@automatedpt.com
Call +1(800)985-6929 To Order or Order Online At Nordgearmotors.com



# Inputs

- Solid Input Shaft - W
- NEMA C-Face
- IEC B5 (Metric)
- Servo Input
- Top Mount
- Scoop Mount
- Flange Input Shaft
- Custom Mounting

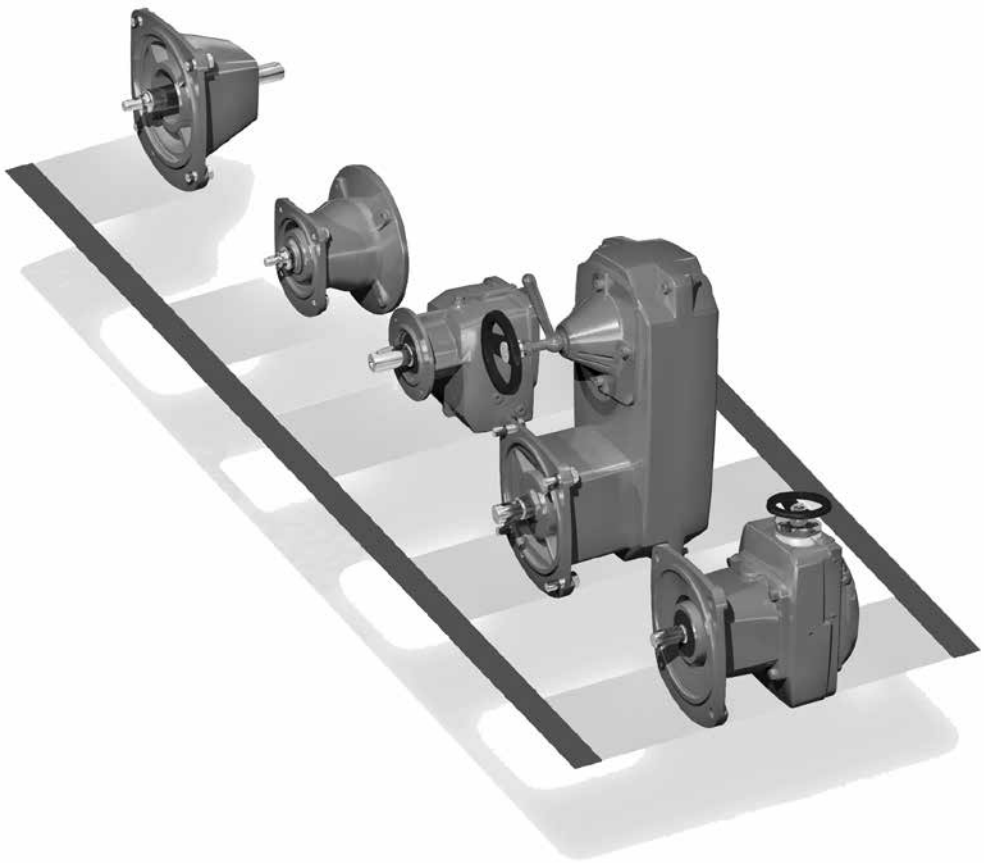

NORD DRIVESYSTEMS

www.nord.com







Send Quote Requests to info@automatedpt.com
Call +1(800)985-6929 To Order or Order Online At Nordgearmotors.com

Send Quote Requests to info@automatedpt.com Call +1(800)985-6929 To Order or Order Online At Nordgearmotors.com

# Input Section

## Input

NORD's modular design allows for many different types of inputs to be added to gear reducers. All inputs are bolt on and include machined pilots to ensure simple and accurate assembly. NORD offers the following different input types:

- Integral motor
- Solid input shaft
- NEMA C-face motor adapter
- IEC B5 motor adapter
- Servo motor adapter
- Top mount motor platform
- Scoop mount motor platform
- Custom mounting interface

## Nomenclature

After the letters, 'SK' Reducer sizes are indicated followed by the dash ( - ), then the input device such as:

- SK32 – 90L/4 (Integral motor)
- SK32 – W (Solid input shaft)
- SK32 – 140TC (NEMA C-face motor adaptor)
- SK32 – IEC80 (IEC B5 motor adaptor)
- SK32 – SEP100 (Servo motor adaptor)
- SK32 – MK140T (Top mount motor platform)
- SK32 – S140T (Scoop mount motor platform)
- SK32 – WII (Custom mounting interface)

## Example Nomenclature

**SK32 - W**

**Solid Input Shaft**

**Gear unit**

Gear unit with solid input shaft.

**SK32 -140TC**

**NEMA 140 TC Motor Adaptor**

**Gear unit**

Gear unit to recieve standard NEMA C-Face motor adaptor.

**SK32 - IEC80**

**IEC 80 B5 Motor Adaptor**

**Gear unit**

Gear unit to recieve standard metric IEC B5 flange mount motor adaptor.

| Solid Input Shaft | NEMA Motor Adapter | IEC Motor Adapter | Integral Motor | | Integral Energy Efficent Motor | | Scoop Mount Motor Platform | Top Mount Motor Platform | Servo Motor Adapter Keyed |
|---|---|---|---|---|---|---|---|---|---|
| W | N56C | IEC 63 | **63S/4** - 0.16hp | **160L/4** - 20hp | **80LH/4** - 1hp | **200LH/4** - 40hp | S56 | MKN056 | SEP 100 |
| | N140 TC | IEC 71 | **63L/4** - 0.25hp | **180MX/4** - 25hp | **90SH/4** - 1.5hp | **225SH/4** - 50hp | S140T | MKN140 | SEP 130 |
| | N180TC | IEC 80 | **71S/4** - 0.33hp | **180LX/4** - 30hp | **90LH/4** - 2hp | **2525MH/4** - 60hp | S180T | MKN180 | SEP 165 |
| | N210TC | IEC 90 | **71L/4** - .05hp | **200L/4** - 40hp | **100LH/4** - 3hp | **250MH/4** - 75hp | S210T | MKN210 | SEP 215 |
| | N250TC | IEC 100 | **80S/4** - 0.75hp | **225S/4** - 50hp | **112MH/4** - 5hp | **280SH/4** - 100hp | S250T | MKN250 | SEP 300 |
| | N280TC | IEC 112 | **80L/4** - 1hp | **2525M/4** - 60hp | **132SH/4** - 7.5hp | **280MH/4** - 125hp | S280T | MKN280 | Servo Motor Adapter Clamp |
| | N320TC | IEC 132 | **90S/4** - 1.5hp | **250M/4** - 75hp | **132MH/4** - 10hp | **315SH/4** - 150hp | S320T | MKN320 | |
| | N360TC | IEC160 | **90L/4** - 2hp | **280S/4** - 100hp | **160MH/4** - 15hp | **315MH/4** - 175hp | S360T | MKN360 | |
| | N400TC | IEC 180 | **100L/4** - 3hp | **280M/4** - 125hp | **160LH/4** - 20hp | **315MAH/4** - 200hp | S400T | MKN400 | SEK 100 |
| | | IEC 200 | **100LA/4** - 5hp | **315S/4** - 150hp | **180MXH/4** - 25hp | **315LH/4** - 250hp | | | SEK 130 |
| | | IEC 225 | **112M/4** - 5hp | **315M/4** - 175hp | **180LH/4** - 30hp | | | | SEK 165 |
| | | IEC 250 | **132S/4** - 7.5hp | **315MA/4** - 200hp | | | | | SEK 215 |
| | | IEC280 | **132M/4** - 10hp | **315L/4** - 250hp | | | | | SEK 300 |
| | | IEC 315 | **160M/4** - 15hp | Other Speeds Available | | Other Speeds Available | | | |


Send Quote Requests to info@automatedpt.com
Call +1(800)985-6929 To Order or Order Online At Nordgearmotors.com

Send Quote Requests to info@automatedpt.com
Call +1(800)985-6929 To Order or Order Online At Nordgearmotors.com



## Integral Motors

NORD provides integral motors that mount directly to the gearbox. Integral motor mounting eliminates the need for costly v-belts or sheaves and directly couples the motor to the reducer. This also results in a dimensionally compact one-piece package.

NORD high performance integral motors are available in many operational voltages, are inverter duty rated, and offer many valuable options including energy efficient motors and power off brakes. For more information on integral motors, see the catalogs motor section (section G).

## Solid Input Shaft

Designed to mount couplings, sheaves or sprockets, which transfer torque from the prime mover. The input shaft is made from ANSI 1045 or stronger material dimensioned with long keys according to ANSI B17 standards. Bearings are sized to handle overhung loads resulting from belt or sprocket inputs. See Section A for more information on the capacity of each input housing assembly. The maximum gearbox input power rating is indicated in the speed reducer performance tables.

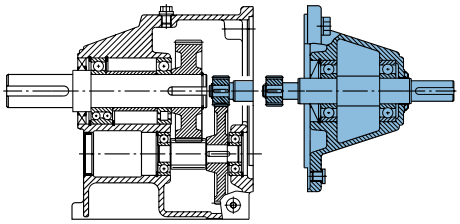

The bearings of solid input shaft type W of the larger gear units require re-lubrication at a regular interval. This is necessary for double-stage gearboxes sizes SK62 or SK6282 and larger, and triple-stage gearboxes from size SK73, SK7382 or SK9072.1 and larger. To lubricate the bearing of the input shaft, approximately 1 oz (25 to 30g) of NIGI 2EP lithium-based grease should be added by the grease zerk approximately every 4000 service hours. To insure adequate service intervals, the grease zerk can be replaced with an Automatic Lubricator.

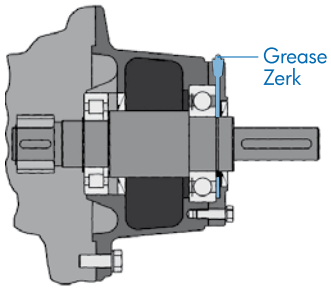


## Automatic Lubricator

Double-reduction gearboxes sizes SK62, SK6282 and larger and triple reduction gearboxes SK73, SK6382, SK9072.1 and larger with NEMA C-face or IEC adapters larger than 250TC/IEC160 are provided with an automatic lubricator. Automatic lubricators contain 120 cm3 (4 oz) of grease that is released over time to the outboard adapter bearing. With 8 hours/day operation the lubricator will last 12 months. The automatic lubricator is designed for ambient temperatures between 32°F (0°C) and 104°F (40°C).

**CAUTION**

The PERMA Automatic Lubrication canister is not recommended for applications where the motor is installed vertically. For alternate solutions, please consult NORD with "the application details."

The automatic lubricator must be activated before the gearbox is put into operation. Activation is accomplished by turning the plastic eyelet in to the canister until the eyelet breaks off. For replacement automatic lubricators order by the part number:

28301000 - Standard canister
28301010 - Food grade canister

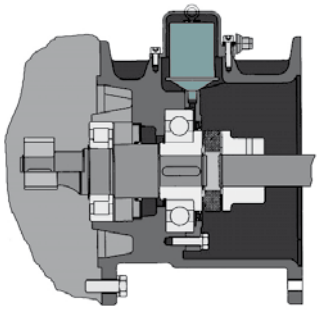

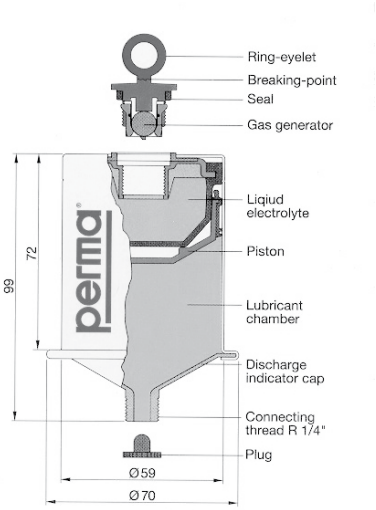






Send Quote Requests to info@automatedpt.com
Call +1(800)985-6929 To Order or Order Online At Nordgearmotors.com

Send Quote Requests to info@automatedpt.com Call +1(800)985-6929 To Order or Order Online At Nordgearmotors.com



## NEMA C-Face Motor Adapter

NEMA C-face motor adapters allow for easy installation and removal of industry standard C-face motors. NEMA C-face motor adapters consist of a coupling and an adapter housing that connects the motor to the gear reducer. Gear units with NEMA C-face adapters are commonly used where applications require specialized motors or the user wants to easily find a replacement motor if failure occurs. NORD also offers high performance NEMA C-face motors and brakemotors, that can be factory installed to the motor adapter.

NORD motor adapters deliver nearly 100% of the torque generated by the motor and can be used from -22°F (-30°C) to 212°F (100°C). Most motor adapters have specially sealed bearings that are lubricated for life. However, some larger adapters are supplied with an automatic lubricator, which provides time released grease to the outboard adapter bearing. The automatic lubricator needs replacement after a specific service interval, see page 675 for more details.

The maximum input power of a gear unit with a NEMA C-face adapter is generally limited by the power rating of the standard NEMA C-face motor size. The power limit is indicated in the ratings table for a standard 4-pole 1750 rpm motor. In some cases the gearbox limit ($T2_{max}$) will be the limiting capacity. Both the NEMA adapter limit and the gearbox torque limit must be considered. If the speeds required exceed those included in the performance and speed reduction tables please contact NORD.



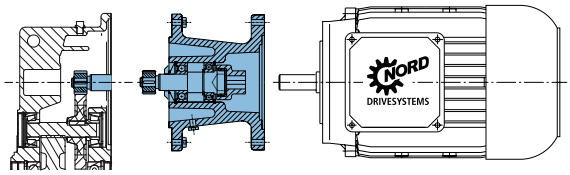


## IEC Motor Adapter (example SK32 – IEC63)

IEC motor adapters allow for easy installation and removal of industry standard IEC motors according to DIN 42677. The IEC adapter is very similar to the NEMA C-face adapter in construction. The maximum input power is generally limited by the IEC motor size. For ratings and dimensions, please consult NORDS's metric catalogs.

## Vertical Motor Adapter Applications

Gear units with motors frame sizes 250TC (IEC160) and larger, in a vertical up motor mounting position, NORD recommends using an integral gearmotor instead of a NEMA or IEC input adapter. If your application requires this mounting position and a NEMA or IEC input, please consult NORD. In vertical down motor mounted applications it is recommended to shorten the maintenance interval.

## Couplings

Couplings are made with tough abrasion resistant materials, which resist most chemicals and petroleum products. They are electrically isolated (prevent metal to metal contact) and require no lubrication or maintenance. Depending on the size of the C-face input, NORD provides either a gear or jaw type coupling.

## Gear Couplings

Gear couplings are used with 56C to 280TC adapters and provide a compact space saving design. C-face adapter input shafts have a machined male spline that meshes with a molded nylon spline on the coupling. This specially designed molded nylon sleeve that exhibits high torsional stiffness, resulting in minimum fit-up backlash and reduced internal frictional losses. Gear couplings lightweight design yields low inertia and use blind assembly and slip together components to make inspection easy without disassembly.

NORD incorporates two styles of gear couplings, the "J" and "M" styles. The "J" style is one-piece couplings consisting of a nylon sleeve and metal hub that are fused together. The "M" style is a two-piece coupling consisting of a separate nylon sleeve and metal hub.

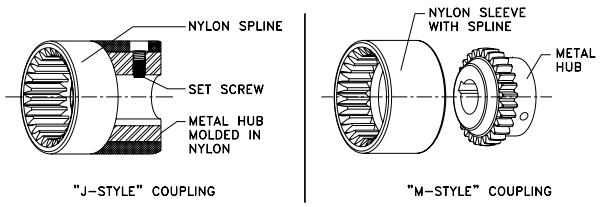


## Jaw Couplings

Jaw couplings are used with 320TC and larger adapters. The cast iron jaw type couplings have a urethane "spider" that provides smooth transmission of the motor torque and has excellent shock and vibration dampening characteristics. A set screw on the coupling prohibits axial movement along the motor shaft.

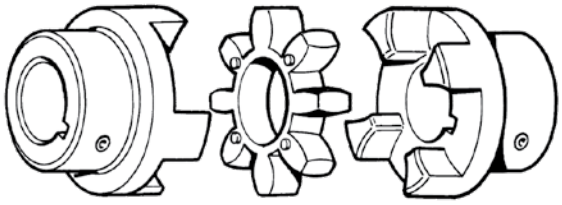


Send Quote Requests to info@automatedpt.com
Call +1(800)985-6929 To Order or Order Online At Nordgearmotors.com

Send Quote Requests to info@automatedpt.com Call +1(800)985-6929 To Order or Order Online At Nordgearmotors.com



### NEMA Motor Adapter Details

| NEMA C-face Motor Frame Size | NEMA Adapter Nomenclature | 4 pole Motor HP | Max Motor Weight [lb] | Coupling Description | Coupling Bore (inches) | Maximum Coupling Torque Capacity (in-lb) | Safety Factor |
|---|---|---|---|---|---|---|---|
| 56 C | - 56C | ≤ 1.0 | 66 | J14 | 0.625 | 177 | 3.3 min |
| 56 C | - 56C | ≤ 1.5 | 66 | J24 | 0.875 | 354 | 6.6 min |
| 143 TC | - 140TC | ≤ 1.5 | 88 | | | | 6.6 min |
| 145 TC | - 140TC | ≤ 2 | 110 | | | | 4.9 min |
| 145 TC | - 140TC | 3 | 110 | | | | 3.3 min |
| 182 TC | - 180TC | 3 | 130 | J28 | 1.125 | 797 | 7.4 min |
| 184 TC | - 180TC | 5 | 175 | | | | 4.4 min |
| 182 TC | - 180TC | 3 | 130 | M38 | 1.125 | 1416 | 13.1 min |
| 184 TC | - 180TC | 5 | 175 | | | | 7.9 min |
| 213 TC | - 210TC | 7.5 | 220 | | 1.375 | | 5.2 min |
| 215 TC | - 210TC | 10 | 220 | | | | 4.0 min |
| 254 TC | - 250TC | 15 | 450 | M42 | 1.625 | 1770 | 3.3 min |
| 256 TC | - 250TC | 20 | 450 | | | | 2.5 min |
| 284 TC | - 280TC | 25 | 550 | M48 | 1.875 | 2478 | 2.8 min |
| 286 TC | - 280TC | 30 | 550 | | | | 2.3 min |
| 324 TC | - 320TC | 40 | 770 | R65 | 2.125 | 11,060 | 8.0 min |
| 326 TC | - 320TC | 50 | 1100 | | | | 6.4 min |
| 364 TC | - 360TC | 60 | 1550 | R90 | 2.375 | 42,480 | 19.9 min |
| 365 TC | - 360TC | 75 | 1550 | | | | 16.1 min |
| 404 TSC | - 400TSC | 100 | 2205 | | 2.875 | | 12.1 min |

### IEC Motor Adapter Details

| IEC Motor B5 4 pole | IEC Adapter Nomenclature | HP / kW | Max Weight Limit [lb] | Coupling Description | Coupling Bore (mm) | Maximum Coupling Torque Capacity (Nm) | Safety Factor |
|---|---|---|---|---|---|---|---|
| 63 S/4 | - IEC 63 | 0.16 / 0.12 | 56 | J14 | 11 | 20 | 23.2 min |
| 63 L/4 | - IEC 63 | 0.25 / 0.18 | 56 | | | | 15.8 min |
| 71 S/4 | - IEC 71 | 0.33 / 0.25 | 67 | | 14 | | 11.5 min |
| 71 L/4 | - IEC 71 | 0.50 / 0.37 | 67 | | | | 7.8 min |
| 80 S/4 | - IEC 80 | 0.75 / 0.55 | 89 | J24 | 19 | 40 | 10.4 min |
| 80 L/4 | - IEC 80 | 1.00 / 0.75 | 89 | | | | 7.6 min |
| 90 S/4 | - IEC 90 | 1.5 / 1.1 | 111 | | 24 | | 5.3 min |
| 90 L/4 | - IEC 90 | 2.0 / 1.5 | 111 | | | | 3.8 min |
| 100 L/4 | - IEC 100 | 3.0 / 2.2 | 133 | J28 | 28 | 90 | 6.1 min |
| 100 L/40 | - IEC 100 | 5.0 / 3.7 | 133 | | | | 4.4 min |
| 112 M/4 | - IEC 112 | 5.3 / 4.0 | 177 | | | | 3.4 min |
| 132 S/4 | - IEC 132 | 7.5 / 5.5 | 221 | M38 | 38 | 160 | 4.3 min |
| 132 M/4 | - IEC 132 | 10 / 7.5 | 221 | | | | 3.2 min |
| 160 M/4 | - IEC 160 | 15 / 11 | 441 | M42 | 42 | 200 | 2.2 min |
| 160 L/4 | - IEC 160 | 20 / 15 | 441 | | | | 1.6 min |
| 180 M/4 | - IEC 180 | 25 / 18.5 | 552 | M48 | 48 | 280 | 2.3 min |
| 180 L/4 | - IEC 180 | 30 / 22 | 552 | | | | 1.9 min |
| 200 L/4 | - IEC 200 | 40 / 30 | 772 | R65 | 55 | 1250 | 6.3 min |
| 225 S/4 | - IEC 225 | 50 / 37.5 | 1103 | | 60 | | 5.2 min |
| 225 M/4 | - IEC 225 | 60 / 45 | 1103 | | | | 4.2 min |
| 250 M/4 | - IEC 250 | 75 / 55 | 1544 | R90 | 70 | 4800 | 13.5 min |
| 280 S/4 | - IEC 280 | 100 / 75 | 1544 | | 80 | | 9.9 min |
| 280 M/4 | - IEC 280 | 125 / 90 | 2205 | | | | 8.2 min |
| 315 S/4 | - IEC 315 | 150 / 110 | 3307 | | 85 | | 6.7 min |
| 315 M/4 | - IEC 315 | 175 / 132 | 3307 | | | | 5.6 min |
| 315 L/4 | - IEC 315 | 250 / 200 | 3307 | | | | 3.7 min |





Send Quote Requests to info@automatedpt.com
Call +1(800)985-6929 To Order or Order Online At Nordgearmotors.com

Send Quote Requests to info@automatedpt.com
Call +1(800)985-6929 To Order or Order Online At Nordgearmotors.com

# Square Flange Servo Adapters

## Servo Motor Adapter

Servo motor adapters are designed to handle the highly dynamic capabilities of servo motors. NORD servo motor adapters have a square mounting flange and are available with either a keyed (SEP) or a key-less (SEK) coupling. They are suitable for speeds up to 3000 rpm and the high torques produced by servo motors. Higher input speeds can be handled for a short duration and the bearings and input shaft are designed to cope with the high torque loads.

Servo adapter inputs are available with helical in-line, Clincher™ shaft mount, helical-bevel and helical-worm units. Compatibility and dimensions are listed in the table below.

View A
Gearbox Flange

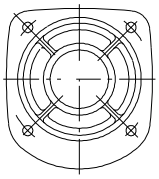

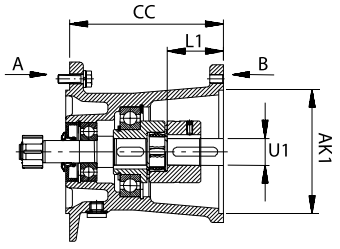


Motor Shaft with Key (SEP)

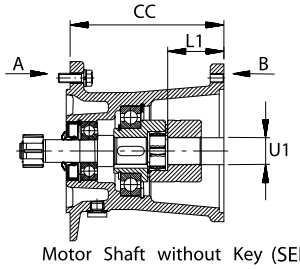


Motor Shaft without Key (SEK)

View B
Motor Flange

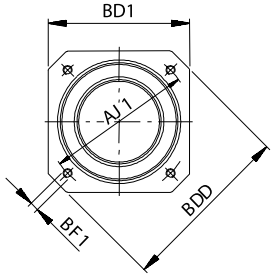


| Reducer type | | | | Servo Adapter | Units | Length | Motor Flange | | | | | Motor Shaft | | Coupling | |
|---|---|---|---|---|---|---|---|---|---|---|---|---|---|---|---|
| In-line | Clincher | H-bevel | H-worm | | | CC | AJ1 | AK1 | BD1 | BDD | BF1 | U1 | L1 | Rotex | Max.Torque |
| SK 11 E<br>SK 02<br>SK 03<br>SK 12 | SK 1282<br>SK 1382<br>SK 2282 | SK 9012.1<br>SK 9013.1<br>SK 9016.1 | SK 02050<br>SK 13050<br>SK12063<br>SK 13063<br>SK 12080<br>SK 13080<br>SK 33100 | -SEP 100 | in | 4.92 | 3.94 | 3.150 | 3.78 | 4.72 | M 6 | 0.748 | 1.57 | 19/24 | 310 lb-in |
| | | | | -SEK 100 | mm | 125 | 100 | 80 | 96 | 120 | | 19 | 40 | | 35 Nm |
| SK 12<br>SK 13<br>SK 23<br>SK 33 | SK 1282<br>SK 2382<br>SK 3382 | SK 9012.1<br>SK 9022.1<br>SK 9023.1<br>SK 9033.1 | SK 02050<br>SK 13050<br>SK 12063<br>SK 12063<br>SK 12080<br>SK 13080<br>SK 33100 | -SEP 130 | in | 5.39 | 5.12 | 4.331 | 4.96 | 6.50 | M 8 | 0.945 | 1.97 | 24/28 | 310 lb-in |
| | | | | -SEK 130 | mm | 137 | 130 | 110 | 126 | 165 | | 24 | 50 | | 35 Nm |
| | | | | -SEP 165 | in | 5.98 | 6.50 | 5.118 | 6.50 | 7.32 | M 10 | 1.260 | 2.28 | 28/38 | 841 lb-in |
| | | | | -SEK 165 | mm | 152 | 165 | 130 | 165 | 186 | | 32 | 58 | | 95 Nm |
| SK 21 E<br>SK 22<br>SK 31 E<br>SK 32<br>SK 43<br>SK 53 | SK 3282<br>SK 4382<br>SK 5382 | SK 9032.1<br>SK 9043.1<br>SK 9053.1 | SK 32100<br>SK 43125 | -SEP 130 | in | 5.94 | 5.12 | 4.331 | 4.96 | 6.10 | M 8 | 0.945 | 1.97 | 24/28 | 310 lb-in |
| | | | | -SEK 130 | mm | 151 | 130 | 110 | 126 | 155 | | 24 | 50 | | 35 Nm |
| | | | | -SEP 165 | in | 6.57 | 6.50 | 5.118 | 6.10 | 7.32 | M 10 | 1.260 | 2.28 | 28/38 | 841 lb-in |
| | | | | -SEK 165 | mm | 167 | 165 | 130 | 155 | 186 | | 32 | 58 | | 95 Nm |
| | | | | -SEP 215 | in | 7.40 | 8.46 | 7.087 | 7.56 | 9.45 | M 12 | 1.496 | 3.15 | 28/38 | 841 lb-in |
| | | | | -SEK 215 | mm | 188 | 215 | 180 | 192 | 240 | | 38 | 80 | | 95 Nm |
| SK 41 E<br>SK 42<br>SK 51 E<br>SK 52<br>SK 63 | SK 4282<br>SK 5282<br>SK 6382 | SK 9042.1<br>SK 9052.1 | SK 42125 | -SEP 215 | in | 9.06 | 8.46 | 7.087 | 7.56 | 9.45 | M 12 | 1.496 | 3.15 | 48 | 2,744 lb-in |
| | | | | -SEK 215 | mm | 230 | 215 | 180 | 192 | 240 | | 38 | 80 | | 310 Nm |
| | | | | -SEP 300 | in | 9.13 | 11.81 | 9.843 | 10.24 | 13.78 | M 16 | 1.890 | 3.23 | 48 | 2,744 lb-in |
| | | | | -SEK 300 | mm | 232 | 300 | 250 | 260 | 350 | | 48 | 82 | | 310 Nm |
| SK 62<br>SK 72<br>SK 73<br>SK 82<br>SK 83<br>SK 92<br>SK 93 | SK 6282<br>SK 7282<br>SK 7382<br>SK 8282<br>SK 8382<br>SK 9382 | SK 9062.1<br>SK 9072.1<br>SK 9082.1<br>SK 9086.1 | | -SEP 300 | in | 9.84 | 11.81 | 9.843 | 10.24 | 13.78 | M 16 | 1.890 | 3.23 | 48 | 2,744 lb-in |
| | | | | -SEK 300 | mm | 250 | 300 | 250 | 260 | 350 | | 48 | 82 | | 310 Nm |

INPUT SECTION


Send Quote Requests to info@automatedpt.com
Call +1(800)985-6929 To Order or Order Online At Nordgearmotors.com

Send Quote Requests to info@automatedpt.com Call +1(800)985-6929 To Order or Order Online At Nordgearmotors.com



## Top Motor Mount Platform

Some applications require the motor to be mounted on top of the reducer with a belt drive connection from the motor to the reducer. MK platforms can be bolted-on to all UNICASE™ gearboxes in any mounting position and offer the following advantages:

- Light, vibration inhibiting aluminum construction
- Corrosion resistant, easily adjustable mechanism for belt tensioning
- Corrosion resistant fasteners
- Available in all mounting positions
- Can be swung 90° to the right or left
- Platform has multiple bolt patterns for various motor sizes

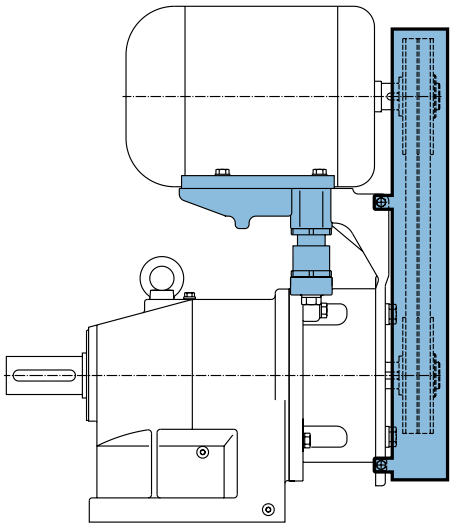

Motor platforms are pre drilled and tapped to bolt on a standard NEMA footed motor. Each platform has belt tension adjusters. See dimension DH for the adjustability range. Motor, belts, sheaves and guard are supplied by the customer.

Availability and nomenclature for each type of speed reducer with top mount platform combination is shown in the chart. Consult NORD for final selection.

**Top Motor Mount Platform Availability**

| Reducer Type | | | | Motor Platform Description | | | | | | | | |
|---|---|---|---|---|---|---|---|---|---|---|---|---|
| | | | | -MKN56 | -MKN140 | -MKN180 | -MKN210 | -MKN250T | -MKN280 | -MKN320 | -MKN360 | -MKN400 |
| | | | | NEMA Footed Motor Frame Size | | | | | | | | |
| | | | | 56 | 143T<br>145T | 182T<br>184T | 213T<br>215T | 254T<br>256T | 284T<br>286T | 324T<br>326T | 364T<br>365T | 404T<br>405T |
| In-line | Clincher™ | Bevel | Worm | HP | | | | | | | | |
| | | | | 1.5 | 1.5<br>2 | 3<br>5 | 7.5<br>10 | 15<br>20 | 25<br>30 | 40<br>50 | 60<br>75 | 100<br>125 |
| SK 11 E<br>SK 02<br>SK 03<br>SK 12<br>SK 13<br>SK 23<br>SK 33 | SK 1282<br>SK 1382<br>SK 2282<br>SK 2382<br>SK 3382 | SK 9012.1<br>SK 9013.1<br>SK 9016.1<br>SK 9022.1<br>SK 9023.1<br>SK 9033.1 | SK 02050<br>SK 13050<br>SK 12063<br>SK 13063<br>SK 12080<br>SK 13080 | X | X | | | | | | | |
| SK 21 E<br>SK 22<br>SK 31 E<br>SK 32<br>SK 43<br>SK 53 | SK 3282<br>SK 4382<br>SK 5382 | SK 9032.1<br>SK 9043.1<br>SK 9053.1 | SK 32100<br>SK 43125 | X | X | X | X | | | | | |
| SK 41 E<br>SK 42<br>SK 51 E<br>SK 52<br>SK 63 | SK 4282<br>SK 5282<br>SK 6382 | SK 9042.1<br>SK 9052.1 | SK 42125 | | X | X | X | X | | | | |
| SK 62<br>SK 72<br>SK 73<br>SK 82<br>SK 83<br>SK 92<br>SK 93 | SK 6282<br>SK 7282<br>SK 7382<br>SK 8282<br>SK 8382<br>SK 9282<br>SK 9382 | SK 9072.1 | | | | X | X | X | X | X | | |
| SK 82<br>SK 92<br>SK 102<br>SK 103 | SK 8282<br>SK 9282<br>SK 10282<br>SK 10382 | SK 9082.1<br>SK 9086.1 | | | | | | | X | X | X | X |





Send Quote Requests to info@automatedpt.com
Call +1(800)985-6929 To Order or Order Online At Nordgearmotors.com

# Top Motor Mount

## Top Motor Mount Platform

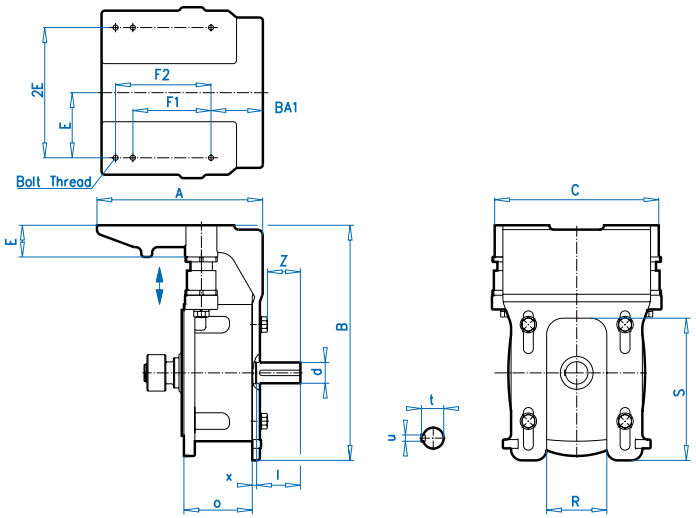


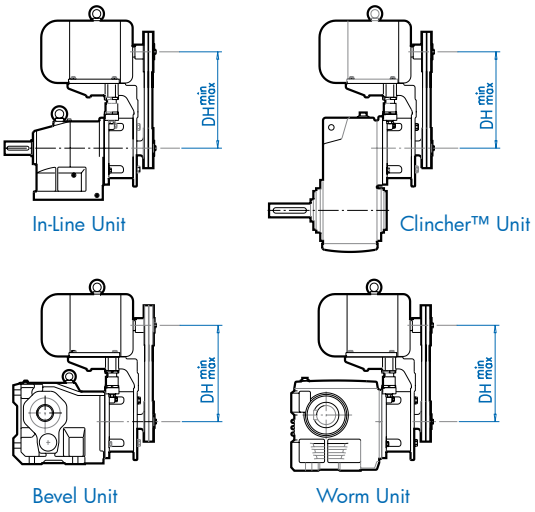


| Reducer Type | | | | MK Platform | F1 | F2 | BA1 | Bolt Thread | E | 2E | A | B | C | G | H | O | R | S | Z |
|---|---|---|---|---|---|---|---|---|---|---|---|---|---|---|---|---|---|---|---|
| Helical In-line | Clincher™ Shaft Mount | Helical Bevel | Helical Worm | | | | | | | | | | | | | | | | |
| SK 11 E | SK 1282 | SK 9012.1 | SK 02050 | 56 | 3 | 5 | 2.87 | 5/16-18 | 2.44 | 4.88 | 8.74 | 9.96 | 8.03 | 1.77 | 6.02 | 4.70 | 2.36 | 5.51 | 1.61 |
| SK 02 | SK 1382 | SK 9013.1 | SK 13050 | 140T | 4 | 5 | 2.37 | 5/16-18 | 2.75 | 5.50 | | | | | | | | | |
| SK 03 | SK 2382 | SK 9016.1 | SK 12063 | | | | | | | | | | | | | | | | |
| SK 12 | SK 3382 | SK 9022.1 | SK 13063 | | | | | | | | | | | | | | | | |
| SK 13 | | SK 9023.1 | SK 12080 | | | | | | | | | | | | | | | | |
| SK 23 | | SK 9033.1 | SK 13080 | | | | | | | | | | | | | | | | |
| SK 33 | | | | | | | | | | | | | | | | | | | |
| SK 21 E | SK 2282 | SK 9032.1 | SK 32100 | 56 | 3 | 5.5 | 2.98 | 5/16-18 | 2.44 | 4.88 | 9.29 | 12.60 | 9.84 | 1.97 | 7.83 | 4.47 | 2.60 | 5.71 | 1.89 |
| SK 22 | SK 3282 | SK 9043.1 | SK 43125 | 140T | 4 | 5 | 2.48 | 5/16-18 | 2.75 | 5.50 | | | | | | | | | |
| SK 31 E | SK 4382 | SK 9053.1 | | 180T | 4.5 | 5 | 2.48 | 3/8-16 | 3.75 | 7.50 | | | | | | | | | |
| SK 32 | SK 5382 | | | 213T | 5.5 | – | 3.38 | 3/8-16 | 4.25 | 8.50 | | | | | | | | | |
| SK 43 | | | | 215T | – | 7 | 3.38 | 3/8-16 | 4.25 | 8.50 | 11.52 | 13.47 | | | | | | | |
| SK 53 | | | | | | | | | | | | | | | | | | | |
| SK 41 E | SK 4282 | SK 9042.1 | SK 42125 | 140T | 4 | 4.5 | 2.68 | 5/16-18 | 2.75 | 5.50 | 11.93 | 16.93 | 11.81 | 2.28 | 10.00 | 4.92 | 4.33 | 10.24 | 2.40 |
| SK 42 | SK 5282 | SK 9052.1 | | 180T | 4.5 | 5.5 | 3.18 | 3/8-16 | 3.75 | 7.50 | | | | | | | | | |
| SK 51 E | SK 6382 | | | 210T | 5.5 | 7 | 3.93 | 3/8-16 | 4.25 | 8.50 | | | | | | | | | |
| SK 52 | | | | 250T | 8.25 | 10 | 4.65 | 1/2-13 | 5 | 10 | 15.90 | 17.68 | 12.50 | | | | | | |
| SK 63 | | | | 250T | 8.25 | 10 | 4.65 | 1/2-13 | 5 | 10 | 15.90 | 17.68 | 12.50 | | | | | | |
| SK 62 | SK 6282 | SK 9072.1 | | 180T | 4.5 | 5.5 | 3.26 | 3/8-16 | 3.75 | 7.50 | 18.74 | 20.87 | 15.75 | 2.95 | 12.40 | 9.92 | 5.12 | 12.40 | 4.57 |
| SK 72 | SK 7282 | | | 210T | 5.5 | 7 | 4.01 | 3/8-16 | 4.25 | 8.50 | | | | | | | | | |
| SK 73 | SK 7382 | | | 250T | 8.25 | 10 | 4.76 | 1/2-13 | 5 | 10 | | | | | | | | | |
| SK 82 | SK 8282 | | | 280T | 9.5 | 11 | 5.26 | 1/2-13 | 5.5 | 11 | | | | | | | | | |
| SK 83 | SK 8382 | | | 320T | 10.5 | 12 | 5.76 | 5/8-11 | 6.25 | 12.5 | | | | | | | | | |
| SK 92 | SK 9282 | | | | | | | | | | | | | | | | | | |
| SK 93 | SK 9382 | | | | | | | | | | | | | | | | | | |
| SK 82 | SK 8282 | SK 9082.1 | | 280T | 9.5 | 11 | 5.26 | 1/2-13 | 5.5 | 11 | 26.06 | 27.17 | 23.70 | 4.13 | 18.31 | 9.65 | 15.04 | 14.37 | 4.67 |
| SK 92 | SK 9282 | SK 9086.1 | | 320T | 10.5 | 12 | 5.76 | 5/8-11 | 6.25 | 12.5 | | | | | | | | | |
| SK 102 | SK 10282 | | | 360T | 11.25 | 12.25 | 6.39 | 5/8-11 | 7 | 14 | | | | | | | | | |
| SK 103 | SK 10382 | | | 400T | 12.25 | 13.75 | 7.13 | 3/4-10 | 8 | 16 | | | | | | | | | |

INPUT SECTION


Send Quote Requests to info@automatedpt.com
Call +1(800)985-6929 To Order or Order Online At Nordgearmotors.com

Send Quote Requests to info@automatedpt.com
Call +1(800)985-6929 To Order or Order Online At Nordgearmotors.com



## Top Motor Mount Platform

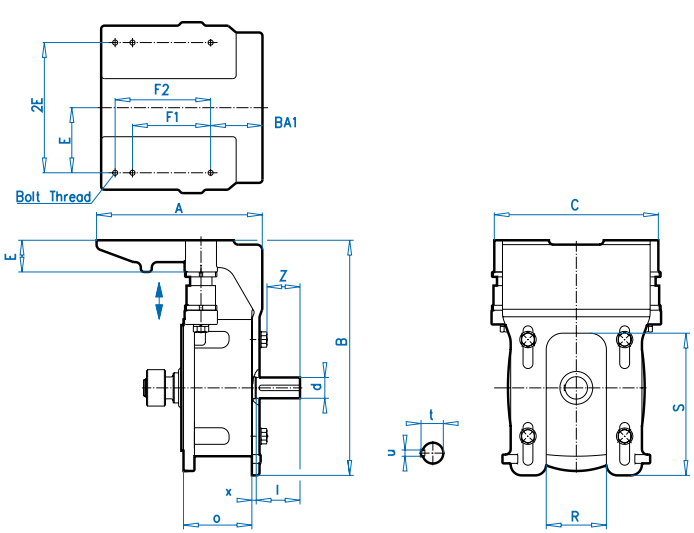


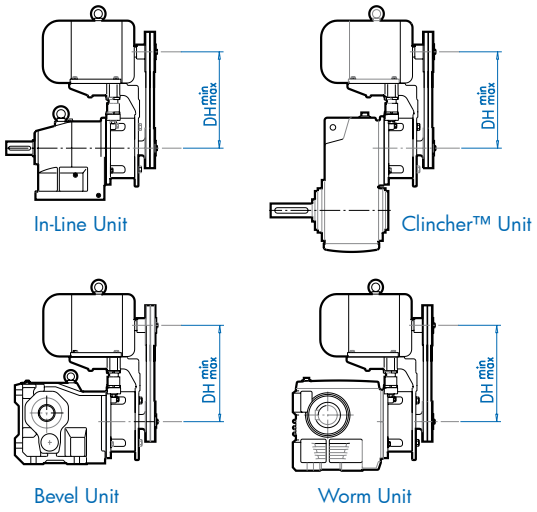


| Reducer Type | | | | MK Platform | DHmin | DHmax | d [mm] | l [mm] | t [mm] | u [mm] | x [mm] |
|---|---|---|---|---|---|---|---|---|---|---|---|
| Helical In-line | Clincher™ Shaft Mount | Helical Bevel | Helical Worm | | | | | | | | |
| SK 11 E | SK 1282 | SK 9012.1 | SK 02050 | 56 | 9.51 | 10.31 | 24 | 50 | 27 | 8 | 8 |
| SK 02 | SK 1382 | SK 9013.1 | SK 13050 | 140T | 9.51 | 10.31 | | | | | |
| SK 03 | SK 2282 | SK 9016.1 | SK 12063 | | | | | | | | |
| SK 12 | SK 2382 | SK 9022.1 | SK 13063 | | | | | | | | |
| SK 13 | SK 3382 | SK 9023.1 | SK 12080 | | | | | | | | |
| SK 23 | | SK 9033.1 | SK 13080 | | | | | | | | |
| SK 33 | | | | | | | | | | | |
| SK 21 E | SK 3282 | SK 9032.1 | SK 32100 | 56 | 11.34 | 12.32 | 28 | 60 | 31 | 8 | 9 |
| SK 22 | SK 4382 | SK 9043.1 | SK 43125 | 140T | 11.34 | 12.32 | | | | | |
| SK 31 E | SK 5382 | SK 9053.1 | | 180T | 12.34 | 13.32 | | | | | |
| SK 32 | | | | 213T | 13.09 | 14.07 | | | | | |
| SK 43 | | | | 215T | 13.96 | 14.94 | | | | | |
| SK 53 | | | | | | | | | | | |
| SK 41 E | SK 4282 | SK 9042.1 | SK 42125 | 140T | 13.5 | 14.76 | 38 | 80 | 41 | 10 | 8 |
| SK 42 | SK 5282 | SK 9052.1 | | 180T | 14.5 | 15.76 | | | | | |
| SK 51 E | SK 6382 | | | 210T | 15.25 | 16.51 | | | | | |
| SK 52 | | | | 250T | 17.0 | 18.26 | | | | | |
| SK 63 | | | | 250T | 17.0 | 18.26 | | | | | |
| SK 62 | SK 6282 | SK 9072.1 | | 180T | 16.9 | 18.48 | 65 | 140 | 69 | 18 | 8 |
| SK 72 | SK 7282 | | | 210T | 17.65 | 19.23 | | | | | |
| SK 73 | SK 7382 | | | 250T | 18.65 | 20.23 | | | | | |
| SK 82 | SK 8282 | | | 280T | 19.4 | 20.98 | | | | | |
| SK 83 | SK 8382 | | | 320T | 20.4 | 21.98 | | | | | |
| SK 92 | SK 9282 | | | | | | | | | | |
| SK 93 | SK 9382 | | | | | | | | | | |
| SK 82 | SK 8282 | SK 9082.1 | | 280T | 25.31 | 27.28 | 65 | 140 | 69 | 18 | 12 |
| SK 92 | SK 9282 | SK 9086.1 | | 320T | 26.31 | 28.28 | | | | | |
| SK 102 | SK 10282 | | | 360T | 27.31 | 29.28 | | | | | |
| SK 103 | SK 10382 | | | 400T | 28.31 | 29.28 | | | | | |




Send Quote Requests to info@automatedpt.com
Call +1(800)985-6929 To Order or Order Online At Nordgearmotors.com

Send Quote Requests to info@automatedpt.com Call +1(800)985-6929 To Order or Order Online At Nordgearmotors.com

# Scoop Motor Platform

## Scoop Motor Platform

Used in industries where quick change of commonly stocked NEMA footed motors is standard practice. NORD Scoops are slotted to allow for motor positioning. An elastomeric coupling and bolt on coupling guard are included. Motors are typically supplied by the customer and must be shimmed to match the shaft height. NORD can supply the motor fully installed.

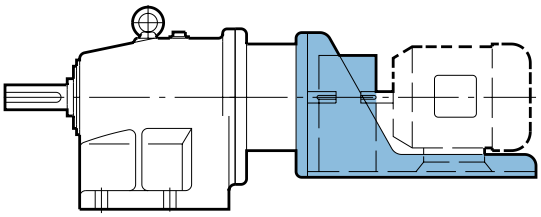

Scoop motor platforms offer the following advantages.

- Heavy duty fabricated steel construction
- Vibration free torsionally stiff design
- Available for mounting in all positions
- Can be swung 90° to the right or left
- Directly mount standard NEMA footed motor
- Motor coupling and safety guard are included

Each Scoop Motor Platform has slotted holes allowing a standard NEMA footed motor to be attached.

**Scoop Availability**

| Reducer Type | | | | Motor Platform Description | | | | | | | |
|---|---|---|---|---|---|---|---|---|---|---|---|
| | | | | -S56 | -S140T | -S180T | -S210T | -S250T | -S280T | -S320T | -S360T |
| | | | | NEMA Footed Motor Frame Size | | | | | | | |
| | | | | 56 | 143T<br>145T | 182T<br>184T | 213T<br>215T | 254T<br>256T | 284T<br>286T | 324T<br>326T | 364T<br>365T |
| | | | | HP | | | | | | | |
| In-line | Clincher™ | Bevel | Worm | 1.5 | 1.5<br>2 | 3<br>5 | 7.5<br>10 | 15<br>20 | 25<br>30 | 40<br>50 | 60<br>75 |
| SK 11 E<br>SK 02<br>SK 03<br>SK 12<br>SK 13<br>SK 23<br>SK 33 | SK 1282<br>SK 1382<br>SK 2282<br>SK 2382<br>SK 3382 | SK 9012.1<br>SK 9013.1<br>SK 9016.1<br>SK 9022.1<br>SK 9023.1<br>SK 9033.1 | SK 02050<br>SK 13050<br>SK 12063<br>SK 13063<br>SK 12080<br>SK 13080 | X | X | | | | | | |
| SK 21 E<br>SK 22<br>SK 31 E<br>SK 32<br>SK 43<br>SK 53 | SK 3282<br>SK 4382<br>SK 5382 | SK 9032.1<br>SK 9043.1<br>SK 9053.1 | SK 32100<br>SK 43125 | X | X | X | X | | | | |
| SK 41 E<br>SK 42<br>SK 51 E<br>SK 52<br>SK 63 | SK 4282<br>SK 5282<br>SK 6382 | SK 9042.1<br>SK 9052.1 | SK 42125 | | X | X | X | X | | | |
| SK 62<br>SK 72<br>SK 73<br>SK 82<br>SK 83<br>SK 92<br>SK 93 | SK 6282<br>SK 7282<br>SK 7382<br>SK 8282<br>SK 8382<br>SK 9282<br>SK 9382 | SK 9072.1 | | | | X | X | X | X | X | |
| SK 82<br>SK 92<br>SK 102<br>SK 103 | SK 8282<br>SK 9282<br>SK 10282<br>SK 10382 | SK 9082.1<br>SK 9086.1 | | | | X | X | X | X | X | X |

INPUT SECTION


Send Quote Requests to info@automatedpt.com
Call +1(800)985-6929 To Order or Order Online At Nordgearmotors.com

Send Quote Requests to info@automatedpt.com
Call +1(800)985-6929 To Order or Order Online At Nordgearmotors.com



## Scoop Motor Platform

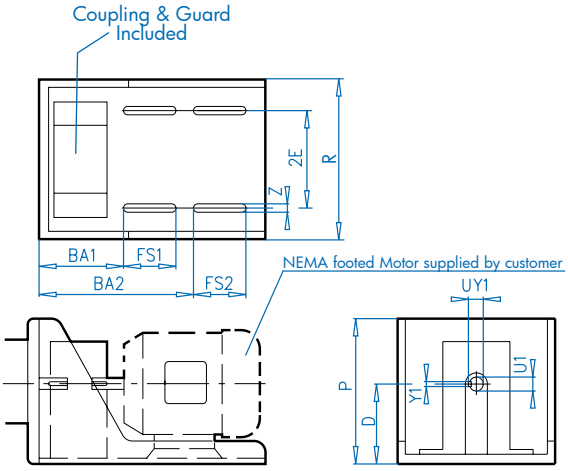


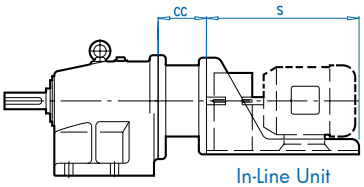


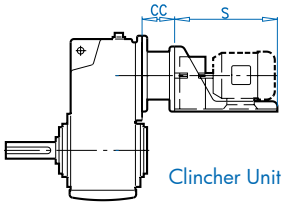


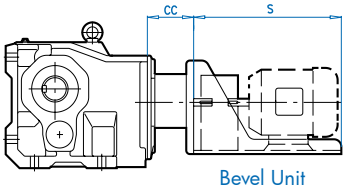


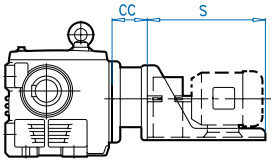


| Reducer Type | | | | Scoop | CC | S | P | D | R | 2E | Z | BA1 | FS1 | BA2 | FS2 | U1 | Y1Z | UY1 |
|---|---|---|---|---|---|---|---|---|---|---|---|---|---|---|---|---|---|---|
| In-line | Clincher™ | Bevel | Worm | | | | | | | | | | | | | | | |
| SK 11 E | SK 1282 | SK 9012.1 | SK 02050 | -S 56 | 2.91 | 13.0 | 6.8 | 3.5 | 8.4 | 4.9 | 0.44 | 6.0 | 3.0 | 9.5 | 3.0 | 0.625 | 0.188 | 0.71 |
| SK 02 | SK 1382 | SK 9013.1 | SK 13050 | -S 140 T | 4.47 | 14.0 | 6.8 | 3.5 | 8.4 | 5.5 | 0.44 | 4.8 | 4.0 | 9.3 | 3.8 | 0.875 | 0.188 | 0.96 |
| SK 03 | SK 2282 | SK 9016.1 | SK 12063 | | | | | | | | | | | | | | | |
| SK 12 | SK 2382 | SK 9022.1 | SK 13063 | | | | | | | | | | | | | | | |
| SK 13 | SK 3382 | SK 9023.1 | SK 12080 | | | | | | | | | | | | | | | |
| SK 23 | | SK 9033.1 | SK 13080 | | | | | | | | | | | | | | | |
| SK 33 | | | | | | | | | | | | | | | | | | |
| SK 21 E | SK 3282 | SK 9032.1 | SK 32100 | -S 56 | 2.91 | 13.0 | 6.8 | 3.5 | 8.4 | 4.9 | 0.44 | 6.0 | 3.0 | 9.5 | 3.0 | 0.625 | 0.188 | 0.71 |
| SK 22 | SK 4382 | SK 9043.1 | SK 43125 | -S 140 T | 4.47 | 14.0 | 6.8 | 3.5 | 8.4 | 5.5 | 0.44 | 4.8 | 4.0 | 8.3 | 3.8 | 0.875 | 0.188 | 0.96 |
| SK 31 E | SK 5382 | SK 9053.1 | | -S 180 T | 4.47 | 19.6 | 8.0 | 4.5 | 10.4 | 7.5 | 0.44 | 7.3 | 2.5 | 12.3 | 2.5 | 1.125 | 0.250 | 1.24 |
| SK 32 | | | | -S 210 T | 4.47 | 20.0 | 8.9 | 5.25 | 12.0 | 8.5 | 0.44 | 8.4 | 3.0 | 14.0 | 4.0 | 1.375 | 0.312 | 1.52 |
| SK 43 | | | | | | | | | | | | | | | | | | |
| SK 53 | | | | | | | | | | | | | | | | | | |
| SK 41 E | SK 4282 | SK 9042.1 | SK 42125 | -S 140 T | 4.88 | 14.8 | 8.8 | 3.5 | 9.5 | 5.5 | 0.44 | 6.8 | 3.0 | 10.8 | 3.5 | 0.875 | 0.188 | 0.96 |
| SK 42 | SK 5282 | SK 9052.1 | | -S 180 T | 4.92 | 20.0 | 9.8 | 4.5 | 10.4 | 7.5 | 0.44 | 8.5 | 3.8 | 13.3 | 4.5 | 1.125 | 0.250 | 1.24 |
| SK 51 E | SK 6382 | | | -S 210 T | 4.92 | 22.0 | 11.6 | 5.25 | 12.0 | 8.5 | 0.44 | 8.5 | 5.0 | 14.5 | 6.0 | 1.375 | 0.312 | 1.52 |
| SK 52 | | | | -S 250 T | 4.92 | 27.3 | 12.6 | 6.25 | 14.4 | 10.0 | 0.56 | 9.0 | 5.0 | 18.6 | 6.8 | 1.625 | 0.375 | 1.80 |
| SK 63 | | | | | | | | | | | | | | | | | | |
| SK 62 | SK 6282 | SK 9072.1 | | -S 180 T | 6.69 | 20.0 | 9.8 | 4.5 | 10.4 | 7.5 | 0.44 | 8.5 | 3.8 | 13.3 | 4.5 | 1.125 | 0.250 | 1.24 |
| SK 72 | SK 7282 | | | -S 210 T | 6.69 | 22.0 | 11.6 | 5.25 | 12.0 | 8.5 | 0.44 | 9.0 | 5.0 | 14.5 | 6.0 | 1.375 | 0.312 | 1.52 |
| SK 73 | SK 7382 | | | -S 250 T | 6.69 | 27.3 | 12.6 | 6.25 | 14.4 | 10.0 | 0.56 | 10.3 | 5.0 | 18.6 | 6.8 | 1.625 | 0.375 | 1.80 |
| SK 82 | SK 8282 | | | -S280 T | 9.29 | 30.0 | 13.3 | 7 | 16.3 | 11.0 | 0.56 | 12.5 | 5.5 | 22.0 | 7.0 | 1.875 | 0.500 | 2.10 |
| SK 83 | SK 8382 | | | -S320 T | 9.29 | 33.0 | 14.3 | 8 | 18.3 | 12.5 | 0.69 | 14.0 | 6.0 | 24.0 | 7.5 | 2.125 | 0.500 | 2.35 |
| SK 92 | SK 9282 | | | -S 360 T | 9.29 | 36.0 | 15.3 | 9 | 20.0 | 14.0 | 0.69 | 14.8 | 6.0 | 26.4 | 6.3 | 2.375 | 0.625 | 2.65 |
| SK 93 | SK 9382 | | | | | | | | | | | | | | | | | |
| SK 82 | SK 8282 | SK 9082.1 | | -S 180 T | 6.69 | 20.0 | 9.8 | 4.5 | 10.4 | 7.5 | 0.44 | 8.5 | 3.8 | 13.3 | 4.5 | 1.125 | 0.250 | 1.24 |
| SK 92 | SK 9282 | SK 9086.1 | | -S 210 T | 9.29 | 22.0 | 11.6 | 5.25 | 12.0 | 8.5 | 0.44 | 9.0 | 5.0 | 14.5 | 6.0 | 1.375 | 0.312 | 1.52 |
| SK 102 | SK 10282 | | | -S 250 T | 9.29 | 27.3 | 12.6 | 6.25 | 14.4 | 10.0 | 0.56 | 10.3 | 5.0 | 18.6 | 6.8 | 1.625 | 0.375 | 1.80 |
| SK 103 | SK 10382 | | | -S 280 T | 9.29 | 30.0 | 13.3 | 7 | 16.3 | 11.0 | 0.56 | 12.5 | 5.5 | 22.0 | 7.0 | 1.875 | 0.500 | 2.10 |
| | | | | -S 320 T | 9.29 | 33.0 | 14.3 | 8 | 18.3 | 12.5 | 0.69 | 14.0 | 6.0 | 24.0 | 7.5 | 2.125 | 0.500 | 2.35 |
| | | | | -S 360 T | 9.29 | 36.0 | 15.3 | 9 | 20.0 | 14.0 | 0.69 | 14.8 | 6.0 | 26.4 | 6.3 | 2.375 | 0.625 | 2.65 |





Send Quote Requests to info@automatedpt.com
Call +1(800)985-6929 To Order or Order Online At Nordgearmotors.com

Send Quote Requests to info@automatedpt.com Call +1(800)985-6929 To Order or Order Online At Nordgearmotors.com

# Flange Face Solid Input Shaft

DRIVESYSTEMS

## Solid Input Shaft With Flange Housing (example SK32 – W II)

Same internal components as the Solid Input Shaft ( -W ) but the housing has a flat machined mounting face with metric drilled and tapped holes. Standard units are available with metric shafts.

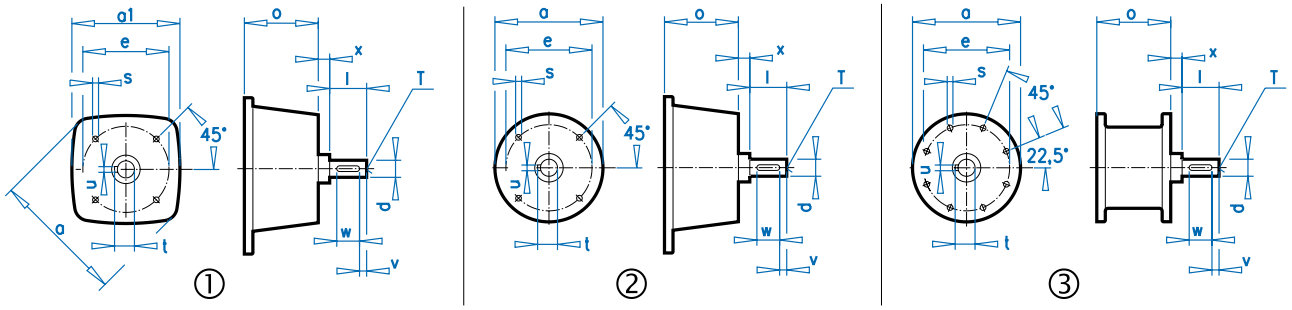


| | Size | Illustration | Outline Dimensions (mm) | | | | | Shaft Dimensions (mm) | | | | | | | |
|---|---|---|---|---|---|---|---|---|---|---|---|---|---|---|---|
| | | | a | a1 | e | o | s | d | l | t | v | x | u | w | T |
| A* | **1** | 2 | 120 | – | 75 | 61.5 | M5 | 14 | 40 | 16 | 5 | 8 | 5 | 30 | M5 |
| B* | **2** | 2 | 120 | – | 100 | 61.5 | M8 | 16 | 40 | 18 | 4 | 8 | 5 | 32 | M5 |
| C* | **3** | 2 | 90 | – | 75 | 70.5 | M5 | 14 | 38.5 | 16 | 5 | 2 | 5 | 30 | M5 |
| D* | **4** | 2 | 120 | – | 100 | 74 | M8 | 16 | 40 | 18 | 4 | 8 | 5 | 32 | M5 |
| E* | **5** | 2 | 120 | – | 100 | 113.5 | M8 | 16 | 40 | 18 | 4 | 8 | 5 | 32 | M5 |
| F* | **6** | 2 | 150 | – | 125 | 119.5 | M8 | 24 | 50 | 27 | 5 | 8 | 8 | 40 | M8 |
| G* | **7** | 1 | 180 | 140 | 125 | 113.5 | M8 | 24 | 50 | 27 | 5 | 8 | 8 | 40 | M8 |
| H* | **8** | 1 | 180 | 140 | 125 | 124 | M8 | 24 | 50 | 27 | 5 | 8 | 8 | 40 | M8 |
| I* | **9** | 1 | 180 | 140 | 150 | 113.5 | M10 | 28 | 60 | 31 | 5 | 9 | 8 | 50 | M10 |
| J* | **10** | 1 | 180 | 140 | 150 | 124 | M10 | 28 | 60 | 31 | 5 | 9 | 8 | 50 | M10 |
| K* | **11** | 2 | 180 | – | 150 | 124 | M10 | 28 | 60 | 31 | 5 | 9 | 8 | 50 | M10 |
| L* | **12** | 1 | 290 | 250 | 215 | 125 | M12 | 38 | 80 | 41 | 5 | 8 | 10 | 70 | M12 |
| M* | **13** | 1 | 290 | 250 | 215 | 170 | M12 | 38 | 80 | 41 | 5 | 8 | 10 | 70 | M12 |
| N* | **14** | 1 | 290 | 250 | 250 | 125 | M16 | 38 | 80 | 41 | 5 | 8 | 10 | 70 | M12 |
| O* | **15** | 1 | 290 | 250 | 250 | 170 | M16 | 38 | 80 | 41 | 5 | 8 | 10 | 70 | M12 |
| P* | **16** | 1 | 290 | 250 | 250 | 170 | M16 | 42 | 110 | 45 | 10 | 8 | 12 | 90 | M16 |
| Q* | **17** | 1 | 350 | 300 | 300 | 252 | M20 | 65 | 140 | 69 | 15 | 8 | 18 | 110 | M20 |
| R* | **18** | 1 | 350 | 300 | 250 | 236 | M16 | 42 | 110 | 45 | 10 | 8 | 12 | 90 | M16 |
| S* | **19** | 1 | 350 | 300 | 300 | 236 | M20 | 65 | 140 | 69 | 15 | 8 | 18 | 110 | M20 |
| T* | **20** | 3 | 550 | – | 500 | 245 | ø18 | 65 | 140 | 69 | 15 | 12 | 18 | 110 | M20 |

*** Refers to the unit compatability tables on the following pages.**




Send Quote Requests to info@automatedpt.com
Call +1(800)985-6929 To Order or Order Online At Nordgearmotors.com

Send Quote Requests to info@automatedpt.com
Call +1(800)985-6929 To Order or Order Online At Nordgearmotors.com



## Solid Input Shaft With Flange Housing (example SK32 – W II)

Same internal components as the Solid Input Shaft ( -W ) but the housing has a flat machined mounting face with metric drilled and tapped holes. Standard units are available with metric shafts.

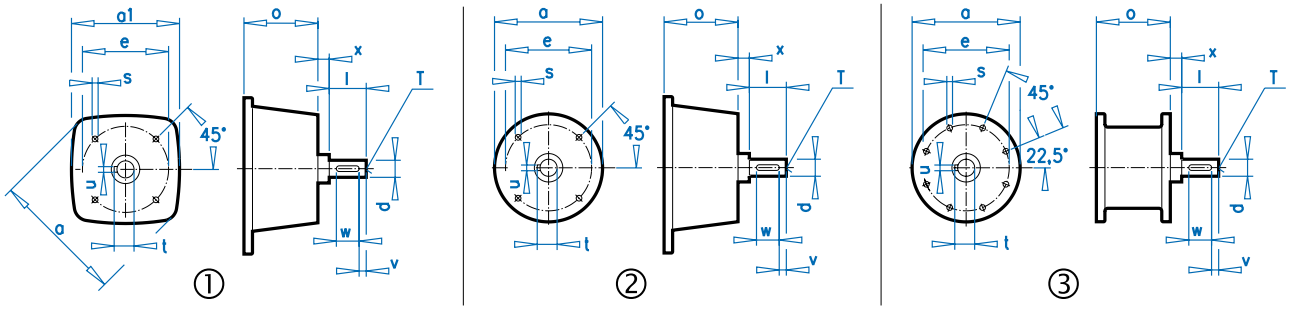


| | Size | Illus-tration | Helical In-line Units | | | Clincher™ Units | | Helical-bevel Units | | | Helical-worm Units | |
|---|---|---|---|---|---|---|---|---|---|---|---|---|
| | | | Single Reduction | Double Reduction | Triple Reduction | Double Reduction | Triple Reduction | Double Reduction | Triple Reduction | Quadruple Reduction | Double Reduction | Triple Reduction |
| A* | 1 | 2 | | | | SK 0182NB WO | SK 1382NB WO | SK 92072 WO | | | SK 02040 WO | |
| | | | | | | SK 0282NB WO | | SK 92172 WO | | | | |
| | | | | | | | | SK 92372 WO | | | | |
| | | | | | | | | SK 92672 WO | | | | |
| | | | | | | | | SK 92772 WO | | | | |
| B* | 2 | 2 | | | | SK 0182NB WII | SK 1382NB WII | SK 92072 WII | | | SK 02040 WII | |
| | | | | | | SK 0282NB WII | | SK 92172 WII | | | | |
| | | | | | | | | SK 92372 WII | | | | |
| | | | | | | | | SK 92672 WII | | | | |
| | | | | | | | | SK 92772 WII | | | | |
| C* | 3 | 2 | SK 11E W0 | SK 02 WO | SK 03 WO | SK 1282 WO | SK 2382 WO | | SK 9012.1 WO | SK 9013.1 WO | SK 02050 WO | SK 13050 WO |
| | | | | SK 12 WO | SK 13 WO | | SK 3382 WO | | SK 9016.1 WO | SK 9017.1 WO | SK 12063 WO | SK 13063 WO |
| | | | | | SK 23 WO | | | | SK 9022.1 WO | SK 9023.1 WO | SK 12080 WO | SK 13080 WO |
| | | | | | SK 33N WO | | | | | SK 9033.1 WO | | SK 33100 WO |
| D* | 4 | 2 | SK 11E WII | SK 02 WII | SK 03 WII | SK 1282 WII | SK 2382 WII | | SK 9012.1 WII | SK 9013.1 WII | SK 02050 WII | SK 13050 WII |
| | | | | SK 12 WII | SK 13 WII | | SK 3382 WII | | SK 9016.1 WII | SK 9017.1 WII | SK 12063 WII | SK 13063 WII |
| | | | | | SK 23 WII | | | | SK 9022.1 WII | SK 9023.1 WII | SK 12080 WII | SK 13080 WII |
| | | | | | SK 33N WII | | | | | SK 9033.1 WII | | SK 33100 WII |
| E* | 5 | 2 | SK 21E WIII | SK 22 WIII | SK 43 WIII | SK 2282 WIII | SK 4382 WIII | | | SK 9043.1 WII | SK 32100 WIII | SK 43125 WIII |
| | | | SK 31E WIII | SK 32 WIII | SK 53 WIII | SK 3282 WIII | SK 5382 WIII | | | SK 9053.1 WII | | |
| F* | 6 | 2 | SK 11E WIII | SK 02 WIII | SK 03 WIII | SK 1282 WIII | SK 2382 WIII | | SK 9012.1 WIII | SK 9013.1 WIII | SK 02050 WIII | SK 13050 WIII |
| | | | | SK 12 WIII | SK 13 WIII | | SK 3382 WIII | | SK 9016.1 WIII | SK 9017.1 WIII | SK 12063 WIII | SK 13063 WIII |
| | | | | | SK 23 WIII | | | | SK 9022.1 WIII | SK 9023.1 WIII | SK 12080 WIII | SK 13080 WIII |
| | | | | | SK 33N WIII | | | | | SK 9033.1 WIII | | SK 33100 WIII |
| G* | 7 | 1 | SK 21E WI | SK 22 WI | SK 43 WI | SK 2282 WI | SK 4382 WI | | SK 9032.1 WI | SK 9043.1 WI | SK 32100 WI | SK 43125 WI |
| | | | SK 31E WI | SK 32 WI | SK 53 WI | SK 3282 WI | SK 5382 WI | | | SK 9053.1 WI | | |
| H* | 8 | 1 | SK 41E WIV | SK 42 WIV | SK 63 WIV | SK 4282 WIV | SK 6382 WIV | | SK 9042.1 WIV | | SK 42125 WIV | |
| | | | SK 51E WIV | SK 52 WIV | | SK 5282 WIV | | | SK 9052.1 WIV | | | |
| I* | 9 | 1 | SK 21E WII | SK 22 WII | SK 43 WII | SK 2282 WII | SK 4382 WII | | SK 9032.1 WII | SK 9043.1 WII | SK 32100 WII | SK 43125 WII |
| | | | SK 31E WII | SK 32 WII | SK 53 WII | SK 3282 WII | SK 5382 WII | | | SK 9053.1 WII | | |
| J* | 10 | 1 | SK 41E WI | SK 42 WI | SK 63 WI | SK 4282 WI | SK 6382 WI | | SK 9042.1 WI | | SK 42125 WI | |
| | | | SK 51E WI | SK 52 WI | | SK 5282 WI | | | SK 9052.1 WI | | | |

*** Refers to the dimensions table on page 684.**




Send Quote Requests to info@automatedpt.com
Call +1(800)985-6929 To Order or Order Online At Nordgearmotors.com

# Flange Face
# Solid Input Shaft

DRIVESYSTEMS

## Solid Input Shaft With Flange Housing (example SK32 – W II)

Same internal components as the Solid Input Shaft ( -W ) but the housing has a flat machined mounting face with metric drilled and tapped holes. Standard units are available with metric shafts.

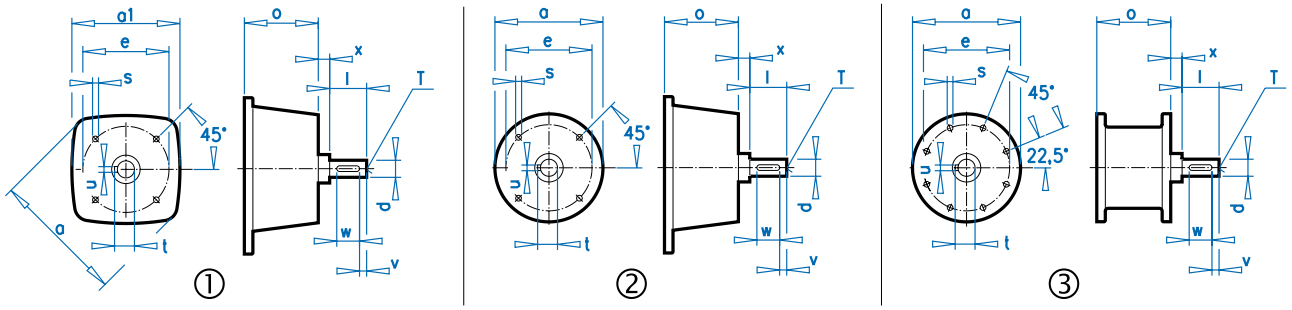


| | | Illustration | Helical In-line Units | | | Clincher™ Units | | Helical-bevel Units | | | Helical-worm Units | |
|---|---|---|---|---|---|---|---|---|---|---|---|---|
| | | | Single Reduction | Double Reduction | Triple Reduction | Double Reduction | Triple Reduction | Double Reduction | Triple Reduction | Quadruple Reduction | Double Reduction | Triple Reduction |
| K* | 11 | 2 | | SK 62 WO | SK 73 WO | SK 6282 WO | SK 7382 WO | | SK 9062.1 WO | | | |
| | | | | SK 72 WO | SK 83 WO | SK 7282 WO | SK 8382 WO | | | | | |
| | | | | | SK 93 WO | | SK 9382 WO | | | | | |
| L* | 12 | 1 | SK 41 WII | SK 42 WII | SK 63 WII | SK 4282 WII | SK 6382 WII | | SK 9042.1 WII | | SK 42125 WII | |
| | | | SK 51 WII | SK 52 WII | | SK 5282 WII | | | SK 9052.1 WII | | | |
| M* | 13 | 1 | | SK 62 WI | SK 73 WI | SK 6282 WI | SK 7382 WI | | SK 9062.1 WI | | | |
| | | | | SK 72 WI | SK 83 WI | SK 7282 WI | SK 8382 WI | | | | | |
| | | | | SK 82 WO | SK 93 WI | | SK 9382 WI | | | | | |
| | | | | | SK 103 WO | | | | | | | |
| N* | 14 | 1 | SK 41E WIII | SK 42 WIII | SK 63 WIII | SK 4282 WIII | SK 6382 WIII | | SK 9042.1 WIII | | SK 42125 WIII | |
| | | | SK 51E WIII | SK 52 WIII | | SK 5282 WIII | | | SK 9052.1 WIII | | | |
| O* | 15 | 1 | | SK 62 WII | SK 73 WII | SK 6282 WII | SK 7382 WII | | SK 9062.1 WII | | | |
| | | | | SK 72 WII | SK 83 WII | SK 7282 WII | SK 8382 WII | | SK 9082.1 WII | | | |
| | | | | SK 82 WII | SK 93 WII | SK 8282 WII | SK 9382 WII | | SK 9086.1 WII | | | |
| | | | | | SK 103 WII | | SK 10382 WII | | | | | |
| | | | | | | | SK 11382 WII | | | | | |
| P* | 16 | 1 | | SK 62 WIII | SK 73 WIII | SK 6282 WIII | SK 7382 WIII | | SK 9062.1 WIII | | | |
| | | | | SK 72 WIII | SK 83 WIII | SK 7282 WIII | SK 8382 WIII | | | | | |
| | | | | | SK 93 WIII | | SK 9382 WIII | | | | | |
| Q* | 17 | 1 | | SK 62 WIV | SK 73 WIV | SK 6282 WIV | SK 7382 WIV | | SK 9062.1 WIV | | | |
| | | | | SK 72 WIV | SK 83 WIV | SK 7282 WIV | SK 8382 WIV | | SK 9082.1 WV | | | |
| | | | | SK 82 WV | SK 93 WIV | SK 8282 WIV | SK 9382 WIV | | SK 9086.1 WV | | | |
| | | | | SK 92 WV | SK 103 WV | | SK 10382 WIV | | | | | |
| R* | 18 | 1 | | SK 82 WI | SK 103 WI | SK 8282 WI | SK 10382 WI | | SK 9082.1 WI | | | |
| | | | | SK 92 WI | | SK 9282 WI | SK 11382 WI | | SK 9086.1 WI | | | |
| | | | | SK 102 WI | | | SK 12382 WI | | SK 9092.1 WI | | | |
| S* | 19 | 1 | | SK 82 WIII | SK 103 WIII | SK 8282 WIII | SK 10382 WIII | | SK 9082.1 WIII | | | |
| | | | | SK 92 WIII | | SK 9282 WIII | SK 11382 WIII | | SK 9086.1 WIII | | | |
| | | | | SK 102 WIII | | | SK 12382 WIII | | SK 9092.1 WIII | | | |
| T* | 20 | 3 | | SK 82 WIV | SK 103 WIV | SK 8282 WIV | SK 10382 WIV | | SK 9082.1 WIV | | | |
| | | | | SK 92 WIV | | SK 9282 WIV | SK 11382 WIV | | SK 9086.1 WIV | | | |
| | | | | SK 102 WIV | | | SK 12382 WIV | | SK 9092.1 WIV | | | |

*** Refers to the dimensions table on page 684.**

INPUT SECTION


Send Quote Requests to info@automatedpt.com
Call +1(800)985-6929 To Order or Order Online At Nordgearmotors.com

Send Quote Requests to info@automatedpt.com Call +1(800)985-6929 To Order or Order Online At Nordgearmotors.com



## Custom Mounting Interface

NORD can provide custom input adapters typically consisting of a special adapter plate and special coupling to mount non-standard dimensioned motors or other devices.

When a custom input adapter is required, special attention needs to be given for each application to be sure the customer receives the performance that is necessary. The following information is required:

- Motor Dimensional Drawing
- Motor Weight
- Motor performance specifications, including torque, horsepower and operating speed ranges.

NORD engineers will review the performance requirements and make a unit selection based on given parameters.

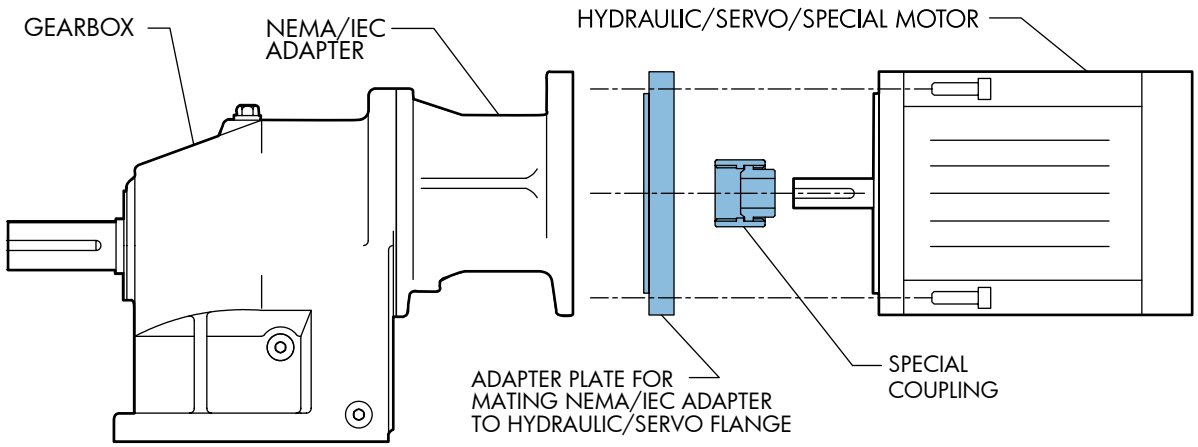





Send Quote Requests to info@automatedpt.com
Call +1(800)985-6929 To Order or Order Online At Nordgearmotors.com

Send Quote Requests to info@automatedpt.com
Call +1(800)985-6929 To Order or Order Online At Nordgearmotors.com

# Notes




Send Quote Requests to info@automatedpt.com
Call +1(800)985-6929 To Order or Order Online At Nordgearmotors.com

Send Quote Requests to info@automatedpt.com
Call +1(800)985-6929 To Order or Order Online At Nordgearmotors.com



# Motors

- Order Form
- NEMA C-Face Motors
- Engineering Information
- Options
- Environmental Options
- Inverter Options
- SK 300E Trio Inverter
- Additional Options
- Ratings Tables
- Dimensions
- Connection Diagrams

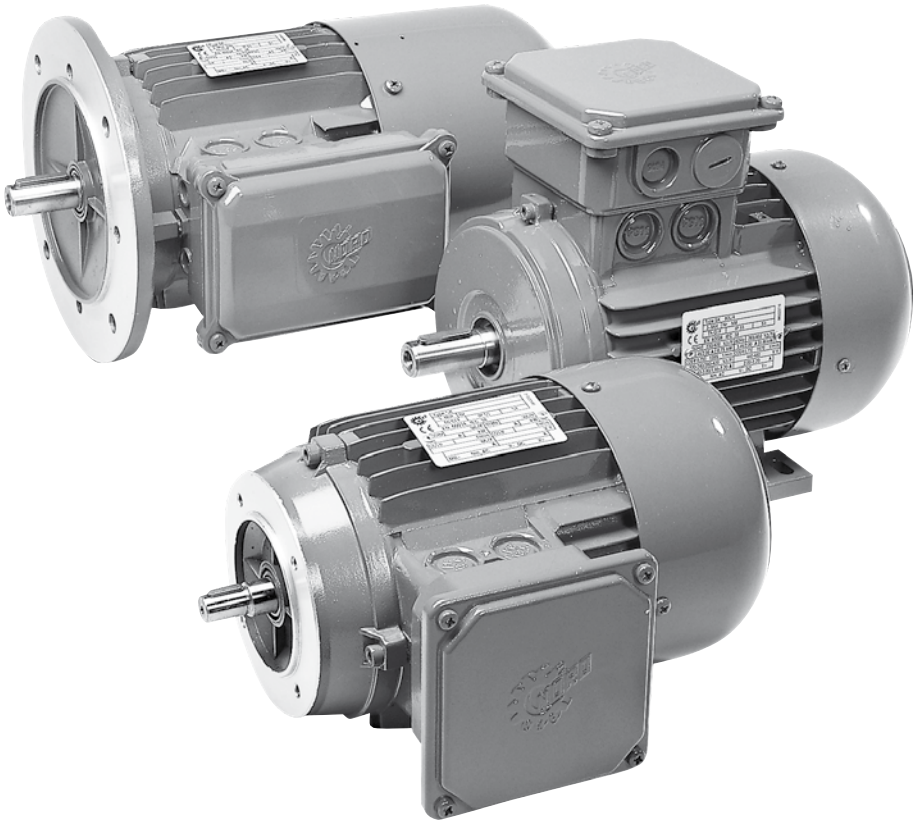

NORD® DRIVESYSTEMS

www.nord.com



| Motor Type | Power Pn | | Nn Full-load | In Full-Load Current 230V[a] | In Full-Load Current 460V[a] |
|---|---|---|---|---|---|
| | [hp] | [kW] | [rpm] | [A] | [A] |
| 63S/4 | 0.16 | 0.12 | 1700 | 0.88 | 0.44 |
| 63L/4 | 0.25 | 0.18 | 1680 | 1.12 | 0.56 |
| 71S/4 | 0.33 | 0.25 | 1710 | 1.56 | 0.78 |
| 71L/4 | 0.5 | 0.37 | 1720 | 1.90 | 0.95 |
| 80S/4 | 0.75 | 0.55 | 1710 | 2.70 | 1.35 |
| 80L/4 | 1 | 0.75 | 1650 | 3.66 | 1.83 |
| 90S/4 | 1.5 | 1.1 | 1660 | 4.84 | 2.42 |
| 90L/4 | 2 | 1.5 | 1660 | 6.34 | 3.17 |
| 100L/4 | 3 | 2.2 | 1705 | 9.0 | 4.50 |
| 100LA/4 | 5 | 3.7 | 1725 | 15.2 | 7.62 |
| 132S/4 | 7.5 | 5.5 | 1735 | 19.8 | 9.9 |
| 132M/4 | 10 | 7.5 | 1735 | 25.8 | 12.9 |
| 160M/4 | 15 | 11 | 1770 | 38.4 | 19.2 |

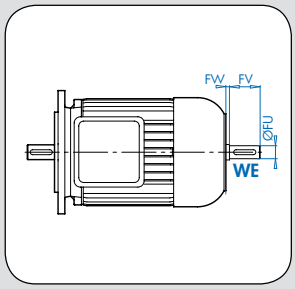


INVERTER DUTY MOTOR

Send Quote Requests to info@automatedpt.com
Call +1(800)985-6929 To Order or Order Online At Nordgearmotors.com

# Motor Order Form



NORD DRIVESYSTEMS

| | Frame | Size | Poles | Motor Options | Brake Size | Brake Options |
|---|---|---|---|---|---|---|
| **SK** | | | | | | |

| Frame | Size | Poles |
|---|---|---|
| 63 | S | 4 |
| 71 | SH | 2 |
| 80 | M | 6 |
| 90 | MH | 4-2 |
| 100 | MX | 8-2 |
| 112 | L | 8-4 |
| 132 | LA | 12-2 |
| | LH | Other |
| | LX | |

**Paint**

- ❍ Unpainted Aluminum Alloy
- ❍ Stainless Steel Paint
- ❍ NSD+ (gray)
- ❍ NSD+W (white)
- ❍ NSD-X3 (gray)
- ❍ NSD-X3W (white)
- ❍ Special _____

**Electrical Motor Options**

- ❒ **H** - Energy Efficient Motor
- ❒ **TW** - Thermostat
- ❒ **TF** - Thermistor
- ❒ **SH** - Space Heater (select voltage)
  - ❍ 110 Volt ❍ 230 Volt ❍ 460 Volt
- ❒ **ISO** H - Class H insulation
- ❒ **WU** - High Resistance Rotor
- ❒ **4-2** - 2-Speed, 4/2 Pole, 1800/3600rpm
- ❒ **8-2** - 2-Speed, 8/2 Pole, 900/3600rpm
- ❒ **ECR** - Single Phase Motor

**Environmental Options**

- ❒ **NSD+** - Nord Severe Duty Paint
- ❒ **NSDx3** - Nord Extreme Duty Paint
- ❒ **RD** - Canopy Drip Cover
- ❒ **RDD** - Double Fan Cover
- ❒ **KB** - Condensation Drain Holes (plugged)
- ❒ **KBO** - Condensation Drain Holes (open)
- ❒ **IP66** - IP66 Enclosure Protection
- ❒ **KKV** - Terminal Box Sealed with Resin
- ❒ **AICM** - Additional Insulation
- ❒ **EP** - Epoxy Dipped Windings

**Frequency Inverter Related Options**

- ❒ **F** - Blower Fan (200-575V 1 & 3 Phase)
- ❒ **FC** - Blower Cooling Fan (115V, 1 Phase)
- ❒ **IG__** - Incremental Encoder
- ❒ **IG__P** - Incremental Encoder with Plug
- ❒ **AG** - Absolute Encoder

**Additional Motor Options**

- ❒ **OL** - Totally Enclosed Non-Ventilated (TENV)
- ❒ **OL/H** - (TENV) Without Fan Cover
- ❒ **WE** - Second Shaft Extension (Fan Side)
- ❒ **HR** - Hand Wheel
- ❒ **Z** - High Inertia Cast Iron Fan
- ❒ **RLS** - Motor Backstop (rotation viewing fan)
  - ❍ Clockwise ❍ Counter-Clockwise
- ❒ **EKK** - Small Terminal Box (not UL approved)
- ❒ **MS** - Quick Power Plug Connector

| Brake Size |
|---|
| BRE 5 |
| BRE 10 |
| BRE 20 |
| BRE 40 |
| BRE 60 |
| BRE 100 |
| BRE 150 |

- ❒ **HL** - Hand Release Lever
- ❒ **FHL** - Locking Hand Release Lever
- ❒ **HLH** - Hand Release Lever with Hole
- ❒ **RG** - Corrosion Protected Brake
- ❒ **SR** - Dust and Corrosion Protected Brake
- ❒ **ADJ_____Nm** - Adjust Brake Torque
- ❒ **BIP66** - IP66 Brake Enclosure
- ❒ **MIK** - Micro-switch
- ❒ **BSH** - Brake Heating/Bifilar Coil
- ❒ **NRB1** - Quiet Brake Release
- ❒ **NRB2** - Quiet Brake Motor Operation
- ❒ **FBR** - Brass Foil
- ❒ **DBR** - Double Brake
- ❒ **G...P** - High Performance Rectifier
- ❒ **G...V** - Sealed Rectifier
- ❒ **IR** - Current Sensing Relay

**Rectifier Selection** ⇨📖 732 - 735

**Rectifier Wiring**

- ❍ Across the line (from motor terminal box)
- ❍ Separate power source (frequency inverter, soft starter)

**Brake Supply Voltage**

- ❍ 24 VDC
- ❍ 115 VAC
- ❍ 200 VAC
- ❍ 230 VAC
- ❍ 400 VAC
- ❍ 460 VAC
- ❍ 500 VAC
- ❍ 575 VAC
- ❍ Other _____

**Braking Method**

- ❍ Method 10
- ❍ Method 15
- ❍ Method 20
- ❍ Method 25
- ❍ Method 30
- ❍ Method 35
- ❍ Method 40
- ❍ Method 45
- ❍ Method 50
- ❍ Method 55

**Hand Release Position**

- ❍ HL1
- ❍ HL2
- ❍ HL3
- ❍ HL4

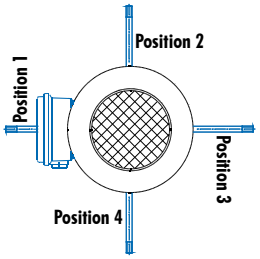


**Mounting**

- ❍ Integral to gearbox
- ❍ NEMA C-Face
- ❍ IEC B5 Mount

**Voltage & Frequency**

- ❍ 230/460V-60Hz
- ❍ 575V-60Hz
- ❍ 208V-60Hz
- ❍ 400V-50Hz
- ❍ 115/230V, 60Hz-1-ph.
- ❍ Other

**Terminal Box Pos.**

- ❍ TB1
- ❍ TB2
- ❍ TB3
- ❍ TB4

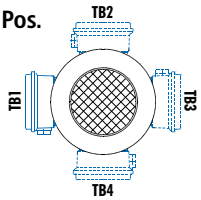


Mtg. Pos. M1 Shown

**Conduit Entry Loc.**

- ❍ CE I *
- ❍ CE II
- ❍ CE III *
- ❍ CE IV

* Brakemotor

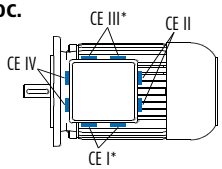


Mtg. Pos. M1 Shown

MOTORS


Send Quote Requests to info@automatedpt.com
Call +1(800)985-6929 To Order or Order Online At Nordgearmotors.com

DRIVESYSTEMS



# Stocked NEMA C-Face Motors

## NEMA C-Face Motors

The National Electrical Manufacturers Association (NEMA) provides standardization of electrical equipment, enabling customers to select from a range of safe, effective and compatible products. A NEMA C-face motor has a machined face with a pilot and threaded holes for direct mounting onto a NORD reducer or other industrial equipment. NORD offers NEMA C-face motors stocked as finished goods and also will assemble NEMA C-face motors to your specifications. For ratings, see page 712.

## Stocked NEMA C-Face Motors

Stocked NEMA C-face motors are offered in a standard efficiency, energy efficient and in a brakemotor design. They are available in 230/460V-60Hz and 575V-60Hz up to 10 hp. Part numbers for stocked NEMA C-face motors are in the table below.

## Assembled per Order NEMA C-Face Motors

NORD will assemble a NEMA C-face motor to your specifications based upon the available motor options from this catalog.

| Motor Type | Power | Part Number 230/460V-60Hz | Part Number 575V-60Hz | Weight [lb] |
|---|---|---|---|---|
| **High Performance Motors** | | | | |
| 63S/4-56C | 1/6 hp | 31110012 | 31110013 | 7.9 |
| 63L/4-56C | 1/4 hp | 31610012 | 31610013 | 9.3 |
| 71S/4-56C | 1/3 hp | 32110012 | 32110013 | 11.9 |
| 71L/4-56C | 1/2 hp | 32610012 | 32610013 | 13.9 |
| 80S/4-56C | 3/4 hp | 33110012 | 33110013 | 17.6 |
| 80L/4-56C | 1 hp | 33610022 | n/a | 19.8 |
| 80L/4-143TC | 1 hp | 33610012 | n/a | 19.8 |
| 90S/4-145TC | 1.5 hp | 34110012 | n/a | 26.5 |
| 90L/4-145TC | 2 hp | 34610012 | n/a | 30.9 |
| 100L/4-182TC | 3 hp | 35110012 | n/a | 39.7 |
| 100LA/4-184TC | 5 hp | 35610012 | n/a | 46.3 |
| 132S/4-213TC | 7.5 hp | 36410012 | n/a | 97.0 |
| 132M/4-215TC | 10 hp | 36710012 | n/a | 121.3 |
| 160M/4-254TC TW | 15 hp | 37310012 | n/a | 160.9 |
| 160L/4-256TC TW | 20 hp | 37510012 | n/a | 178.6 |
| 180MX/4-284TC TW | 25hp | 37610012 | n/a | 276.3 |
| 180LX/4-286TC TW | 30hp | 37810012 | n/a | 307.2 |
| **Energy Efficient Motors** | | | | |
| 80LH/4-56C | 1 hp | 33610094 | 33610095 | 19.8 |
| 80LH/4-143TC | 1 hp | 33610092 | 33610093 | 19.8 |
| 90SH/4-145TC | 1.5 hp | 34110092 | 34110093 | 26.5 |
| 90LH/4-145TC | 2 hp | 34610092 | 34610093 | 30.9 |
| 100LH/4-182TC | 3 hp | 35610092 | 35610093 | 39.7 |
| 112MH/4-184TC | 5 hp | 36110082 | 36110083 | 83.6 |
| 132SH/4-213TC | 7.5 hp | 36410092 | 36410093 | 97.0 |
| 132MH/4-215TC | 10 hp | 36710092 | 36710093 | 121.3 |
| 160MH/4-254TC TW | 15 hp | 37310092 | 37310093 | 160.9 |
| 160LH/4-256TC TW | 20 hp | 37510092 | 37510093 | 198.4 |
| **Brakemotors** | | | | |
| 63S/4-56C BRE5 HL | 1/6 hp | 31110034 ◈ | 31110035 ∗ | 12.4 |
| 63L/4-56C BRE5 HL | 1/4 hp | 31610034 ◈ | 31610035 ∗ | 13.7 |
| 71S/4-56C BRE5 HL | 1/3 hp | 32110034 ◈ | 32110035 ∗ | 16.3 |
| 71L/4-56C BRE5 HL | 1/2 hp | 32610034 ◈ | 32610035 ∗ | 18.3 |
| 80S/4-56C BRE10 HL | 3/4 hp | 33110034 ◈ | 33110035 ∗ | 24.3 |
| 80L/4-56C BRE10 HL | 1 hp | 33610024 ◈ | 33610025 ∗ | 26.5 |
| 80L/4-143TC BRE10 HL | 1 hp | 33610034 ◈ | 33610035 ∗ | 26.5 |
| 90S/4-145TC BRE20 HL | 1.5 hp | 34110034 ◈ | 34110035 ∗ | 36.4 |
| 90L/4-145TC BRE20 HL | 2 hp | 34610034 ◈ | 34610035 ∗ | 40.8 |
| 100L/4-182TC BRE40 HL | 3 hp | 35110034 ◈ | 35110035 ∗ | 55.1 |
| 100LA/4-184TC BRE40 HL | 5 hp | 35610034 ◈ | 35610035 ∗ | 61.7 |
| 132S/4-213TC BRE60 HL | 7.5 hp | 36410034 ◈ | 36410035 ∗ | 123.5 |
| 132M/4-215TC BRE100 HL | 10 hp | 36710034 ◈ | 36710035 ∗ | 156.5 |
| 160M/4-254TC BRE 150 HL TW | 15 hp | 37310034 ◈ | 37310035 ∗ | 220.5 |
| 160L/4-256TC BRE 250 HL TW | 20 hp | 37510034 ◈ | 37510035 ∗ | 242.5 |

◈230/460V motors have brake systems supplied with 230VAC to a GVE20L rectifier that outputs 205VDC to the brake coil
∗ 575V motors have brake systems supplied with 575VAC to a GHE50L rectifier that outputs 250VDC to the brake coil




Send Quote Requests to info@automatedpt.com
Call +1(800)985-6929 To Order or Order Online At Nordgearmotors.com

# Engineering Information
# Standard Design & Construction



NORD DRIVESYSTEMS

## Standards
All motors are in accordance with existing standards and regulations:

**NEMA MG 1 - Motors and Generators:**
- Electrical performance
- Motors for operation on variable frequency inverters

**UL 1004 – Electric Motors**

**CSA C22.2 No. 100-04 - Motors and Generators:**

**Industrial Products**
**IEC 60034 parts 1, 5, 6, 8, 9, 11 and 14.**
- Part 1 – General rules
- Part 5 – Types of enclosures
- Part 6 – Types of cooling
- Part 8 – Terminal lead designations and sense of rotation
- Part 9 – Noise limits
- Part 11 – Integrated thermal protection
- Part 14 – Mechanical vibration

**IEC 60038 – Standard voltages**

| | |
|---|---|
| CE | NORD motors carry the CE mark in accordance with the Low Voltage Directive and, if installed properly, the Electromagnetic Compatibility Directive (EMC). The CE mark is required for installation in European Union (EU) states. |
| | Many NORD motors from frame size 63 to 315 are an Underwriters Laboratories Recognized component per UL standard 1004.<br>Frames 63-132 File number E191510<br>Frames 160+ File number E227215 |
| C SA US | The Canadian Standards Association CUS mark indicates that CSA has tested and approved NORD motors according to both US and Canadian standards. It is equivalent to the Underwriters Laboratories RU recognition mark (UL standard 1004) and the CSA mark according to CSA Standard C22.2 No. 100-04<br>Frames 63-132 File number LR112560<br>Frame 160+ File number LR13494 |
| ee | NORD Energy Efficient motors up to frame 160 have been evaluated by the United States Department of Energy and recieved a Certificate of Compliance to certify the efficiency ratings. The certificate of compliance is CC 092B. |
| CSA E | NORD energy efficient motors carry the CSA energy efficiency verification mark. This mark ensures that CSA has verified that NORD motors are designed and manufactured to meet energy efficiency requirements number EEV112560. |

## EPAct – US Energy Efficiency

The Energy Policy Act of 1992 (EPAct) covers efficiency levels of general purpose industrial electric motors and became effective October 24, 1997. The basic goal of the law is to promote energy conservation. This law mandated energy efficiency requirements for many devices including some types of industrial electric motors. The efficiency levels are defined in NEMA MG-1 table 12-10. The regulations to implement this law have been developed by the Department of Energy (DOE).

The law covers minimum efficiency levels for general purpose motors including:

- Single-speed, polyphase NEMA T frame (and IEC equivalents)
- 1 to 200 hp (0.75 to 150 kW)
- 1200, 1800 or 3600 rpm
- NEMA design A and B
- Continuous rated
- Foot-mounted
- 230/460V-60Hz

The law excludes the following motor types from minimum efficiency levels:
- Integral gearmotors
- Brake motors

The NORD "H" line of energy efficient motors are designed to meet the efficiency levels defined by EPAct. NORD offers these motors as an option in combination with our high efficiency gear units for superior energy savings.

Efficiency levels for enclosed 4-pole motors per EPAct and NEMA MG 1 - in percent efficiency [%]

**Efficiency for EPACT & NEMA MG1 4-Pole Motors**

| hp | 1 | 1.5 | 2 | 3 | 5 | 7.5 | 10 |
|---|---|---|---|---|---|---|---|
| kW | 0.75 | 1.1 | 1.5 | 2.2 | 3.7 | 5.5 | 7.5 |
| Eff% | 82.5 | 84.0 | 84.0 | 87.5 | 87.5 | 89.5 | 89.5 |

| hp | 15 | 20 | 25 | 30 | 40 | 50 | 60 |
|---|---|---|---|---|---|---|---|
| kW | 11 | 15 | 18.5 | 22 | 30 | 37 | 45 |
| Eff% | 91.0 | 91.0 | 92.4 | 92.4 | 93.0 | 93.0 | 93.6 |

| hp | 75 | 100 | 125 | 150 | 200 |
|---|---|---|---|---|---|
| kW | 55 | 75 | 90 | 110 | 150 |
| Eff% | 94.1 | 94.5 | 94.5 | 95.0 | 95.0 |


Send Quote Requests to info@automatedpt.com
Call +1(800)985-6929 To Order or Order Online At Nordgearmotors.com

Send Quote Requests to info@automatedpt.com Call +1(800)985-6929 To Order or Order Online At Nordgearmotors.com



## Canadian Energy Efficiency

The Energy Efficiency Act and the Energy Efficiency Regulations establish minimum energy performance levels for electric motors from 1 to 200 HP (0.75 to 150 kW) for sale or lease in Canada. The Energy Efficiency Regulations were developed by Natural Resources Canada (NRCan).

Certain National Electrical Manufacturers Association (NEMA) motors have been regulated since Feb. 3,1995. Effective Nov. 27, 1997, the Energy EfficiencyRegulations were amended to include International Electrotechnical Commission (IEC) motors. This amendment also increased the minimum energy performance levels that motors must meet. For explosion-proof motors and motors contained within an integral gear assembly, the effective date of the Regulations is Nov. 27, 1999.

The regulations mandate that motors carry an energy efficiency verification mark that is authorized by Standards Council of Canada (SCC) accredited certification organization such as Canadian Standards Association (CSA).

## CEMEP Agreement
## European Efficiency Categories

CEMEP, the association of European Electric Motor Manufacturers, has reached an agreement with the European Commission's General Directorate for Energy that in the future all 2 and 4-pole low voltage motors from 1 to 100kW will be categorized on the basis of their efficiency. The classification will be displayed on the nameplate and in catalogs. The following categories will be used: EFF1, EFF2 and EFF3.

| | |
|---|---|
| EFF 1 | Indicates a high efficiency factor. |
| EFF 2 | Indicates an improved efficiency factor. |
| EFF 3 | Indicates a standard efficiency factor. |

NORD supplies both motors of EFF1 and EFF2 categories in its 4-pole motors. The category EFF2 motors are the standard efficiency motors and the EFF1 motors are the "H" line of energy efficient motors.

In the future NORD will mark all of its 50-Hz motor with the CEMEP efficiency symbols.

| kW | 1.1 | 1.5 | 2.2 | 3 | 4 | 5.5 |
|---|---|---|---|---|---|---|
| hp | 1.5 | 2 | 3 | 4 | 5.4 | 7.5 |
| EFF1 [%] | 83.3 | 85.0 | 86.4 | 87.4 | 88.3 | 89.2 |
| EFF2 [%] | 76.2 | 78.5 | 81.0 | 82.6 | 84.2 | 85.7 |
| EFF3 [%] | <76.2 | <78.5 | <81.0 | <82.6 | <84.2 | <85.7 |

| kW | 7.5 | 11 | 15 | 18.5 | 22 | 30 |
|---|---|---|---|---|---|---|
| hp | 10 | 15 | 20 | 25 | 30 | 40 |
| EFF1 [%] | 90.1 | 91.0 | 91.8 | 92.2 | 92.6 | 93.2 |
| EFF2 [%] | 87.0 | 88.4 | 89.4 | 90.0 | 90.5 | 91.4 |
| EFF3 [%] | <87.0 | <88.4 | <89.4 | <90.0 | <90.5 | <91.4 |

| kW | 37 | 45 | 55 | 75 | 90 |
|---|---|---|---|---|---|
| hp | 50 | 60 | 75 | 100 | 120 |
| EFF1 [%] | 93.6 | 93.9 | 94.2 | 94.7 | 95.0 |
| EFF2 [%] | 92.0 | 92.5 | 93.0 | 93.6 | 93.9 |
| EFF3 [%] | <92.0 | <92.5 | <93.0 | <93.6 | <93.9 |

INVERTER DUTY MOTOR

## Inverter/Vector Duty

NORD single–speed motors are Inverter/Vector Duty. The construction of the NORD motors insulating system takes into account the non-sinusoidal wave forms produced by variable frequency drives. NORD uses high grade insulating components and extra first turn protection as well as double coated wire to ensure long service life when connected to inverters. NORD motors can produce full torque at zero speed if properly sized, selected and controlled.




Send Quote Requests to info@automatedpt.com
Call +1(800)985-6929 To Order or Order Online At Nordgearmotors.com

Send Quote Requests to info@automatedpt.com Call +1(800)985-6929 To Order or Order Online At Nordgearmotors.com

# Engineering Information
# Standard Design & Construction



DRIVESYSTEMS

## Voltage and Frequency

NORD motors are available in a wide range of voltages and frequencies for use in North America and around the world. For a more detailed list of choices see page 697.

NORD motors designed for North American voltages (230V, 460V, 208V and 575V) conform to the voltage and frequency tolerances in NEMA MG-1. The voltage tolerance is +/-10%, the frequency tolerance is +/- 5% or a combined voltage and frequency tolerance of +/-10%.

## Low Inertia

The motor inertia in all NORD motors is extremely low which allows for a much more dynamic motor control capability. Low motor inertia is a significant advantage when using NORD motors with inverters or vector controllers. NORD motors can cycle more frequently and require less mechanical energy to start than standard NEMA frame motors. This leaves more energy to start the load.

## High Torque

The NORD motors produce higher starting torque than required by NEMA standards. This is achieved through improved motor winding, rotor design and construction.

## Non-Sparking Fan

The standard NORD motor fan is a non-sparking design. The fan will also provide proper airflow in either direction of rotation.

## Terminal Block

Each NORD motor uses a terminal block, which is a superior method of wire termination when compared to pigtail leads. A terminal block ensures long-term reliability of the power connections.



## Tropical Protection (Anti-fungal)

As standard the NORD motor insulation system is tropically protected. The insulating and construction components are inorganic materials so they resist fungal growth.

## Insulation Class

NORD motors are constructed with a thermal class F insulating system. The motors are also designed for a class B temperature rise (80°C). The use of class F insulation with a class B temperature rise provides increased operating life. Motors constructed with class H insulation are also available as an option.

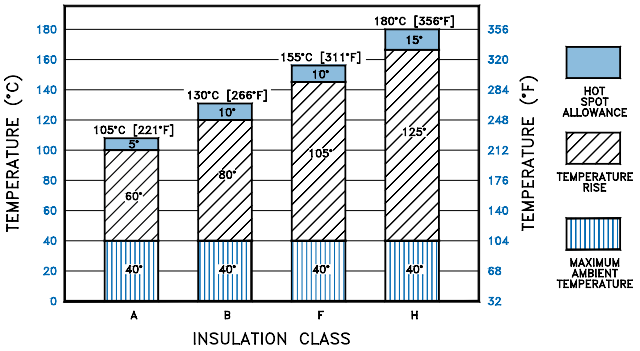


## Insulation System

NORD motor insulation system is designed to provide a superior degree of protection. NORD utilizes the following insulation components:

- Magnet wire – double coated insulation
- Varnish dip impregnation
- Slot liners
- Phase paper
- Phase separators
- Top sticks
- Connecting wire sleeves

Other motor manufacturers eliminate some of these insulating components for cost reduction.

## Inverter/Vector Duty – Voltage Spikes

All NORD motors are constructed with an insulating system designed to withstand the repeated voltage spikes generated by modern frequency inverters. The insulation system withstands the ratings in conformance with NEMA MG 1-2006 Section 31.4.4.2 Voltage Spikes.

$V_{peak} = 3.1 \times V_{rated}$ with a Rise time $\leq 0.1\mu s$.

MOTORS


Send Quote Requests to info@automatedpt.com
Call +1(800)985-6929 To Order or Order Online At Nordgearmotors.com

Send Quote Requests to info@automatedpt.com Call +1(800)985-6929 To Order or Order Online At Nordgearmotors.com







## Ambient Temperature

NORD motors are designed to operate with a maximum ambient temperature of 40°C (104°F). If the motor's operating environment exceeds 40°C, the motor's nominal power $P_n$ either needs to be de-rated (see table below) or use upgraded insulation.

| Ambient temp [°F] | 113 | 122 | 131 | 140 |
|---|---|---|---|---|
| Ambient temp [°C] | 45 | 50 | 55 | 60 |
| De-rate factor | 0.96 | 0.92 | 0.87 | 0.82 |

**Motor Rated Power = [$P_n$ x De-rate factor]**

## Elevation

NORD motors are designed to operate at an elevation of up to 3300 ft (1000 m) above sea level. At higher elevations the air is thinner resulting in less cooling capacity. If the motor's nominal power $P_n$ installation elevation exceeds 3300 ft (1000 m), the motor either needs to be de-rated (see table below) or requires upgraded insulation.

| Altitude [ft] | 5000 | 6500 | 8200 | 10000 | 11500 | 13000 |
|---|---|---|---|---|---|---|
| Altitude [m] | 1500 | 2000 | 2500 | 3000 | 3500 | 4000 |
| De-rate Factor | 0.97 | 0.94 | 0.90 | 0.86 | 0.83 | 0.80 |

**Motor Rated Power = [$P_n$ x De-rate factor]**

## Service Factor

Motors rated 230/460V-60Hz and 332/575V-60Hz have a service factor of 1.15. Almost all other motors have a service factor of 1.1 or 1.0.

## Starting Frequency

One major advantage of NORD motors & brakemotors is the ability to operate in high start-stop applications. Due to the motors optimized design, NORD motors can, under some conditions, cycle thousands of times an hour. This means that a NORD brakemotor can often be used to replace a clutch brake system. If the motor or brakemotoris used with an inverter or vector drive, the motor's cycling capacity can be increased even more.

The permissible frequency of switching may be calculated as follows:

$Z_O$ no-loadstarting frequency [starts/hour]
$Z_{zul}$ permissible starting frequency[starts/hour]
$J_{mot}$ moment of inertia of motor [lb-in2]
$J_{red}$ external inertia reflected to motor shaft [lb-in2]
$T_a$ required starting torque [lb-in]
$T_l$ load torque after starting [lb-in]

$$Z_{zul} = Z_0 \times \frac{1 - \frac{T_1}{T_a}}{1 + \frac{J_{red}}{J_{mot}}}$$

## Duty Classes

The following duty types are defined in IEC 60034-1.

| Duty Type | Explanation Excerpts |
|---|---|
| S1 | Continuous operation at a constant load, the motor reaches thermal equilibrium |
| S2 | Short-time operation at a constant load for a given time followed by a time of rest until the motor is completely cooled down to ambient temperature.<br>Example: S2-10 minutes<br>Recommended values for determination: 10, 30 minutes |
| S3 | Intermittent operation sequential, identical run and rest cycles with constant load. Temperature equilibrium is never reached. Starting current has little effect on temperature rise. The cyclic duration factor (cdf) indicates the portion of operation time in relation to a complete duty cycle. The typical duty cycle time is 10 minutes, unless otherwise specified.<br>Example: S3-40%<br>Recommended values for determination: 25, 40, 60% |
| S6 | Continuous operation with intermittent load sequential, identical cycles of running with constant load and running with no load. No rest periods.<br>Example: S6-40%<br>Recommended values for determination: 25, 40, 60% |

## Power Increasing Factor for Short-term & Intermittent Operation

Motor ratings in this catalog are based on continuous duty operation (S1). If a motor is designed for S1 duty, but is to be operated for short-time or intermittent operation it can be subjected to higher loads. The factors of "motor rated power" increases versus nominal power ($P_n$) are included in the following table.

| Duty Type | | | Increasing factor |
|---|---|---|---|
| S2 | Operating time | 10 min | 1.40 |
| | | 30 min | 1.15 |
| S3 | Cyclic duration factor (cdf) | 25% | 1.33 |
| | | 40% | 1.18 |
| | | 60% | 1.08 |
| S6 | Cyclic duration factor (cdf) | 25% | 1.45 |
| | | 40% | 1.35 |
| | | 60% | 1.15 |

**Motor Rated Power = [$P_n$ x Increasing factor]**




Send Quote Requests to info@automatedpt.com
Call +1(800)985-6929 To Order or Order Online At Nordgearmotors.com

Send Quote Requests to info@automatedpt.com Call +1(800)985-6929 To Order or Order Online At Nordgearmotors.com

# Engineering Information
# Standard Design & Construction



## Enclosure

The NORD standard motors are provided with Totally Enclosed Fan-Cooled (TEFC) with an IP55 enclosure rating. Other enclosures are available, including Totally Enclosed Non-Ventilated (TENV), Totally Enclosed Blower-Cooled (TEBC), and IP66.

The motor integral cooling fan provides proper air flow in either direction of rotation. The IEC cooling classification is IC 411 according to IEC 60034-6.

## IP Enclosures per IEC 60034-5 - Simplified

| | 1st digit Foreign body protection | | 2nd digit Water protection |
|---|---|---|---|
| 0 | No protection | 0 | No Protection |
| 1 | Protected against solid objects 50mm (2 in) in diameter and larger | 1 | Protected against dripping water |
| 2 | Protected against solid objects 12 mm (1/2 in) in diameter and larger | 2 | Protected against dripping water up to a 15 degree angle |
| 3 | Protected against solid objects 2.5 mm (0.1 in) in diameter and larger | 3 | Protection against sprayed water |
| 4 | Protected against solid objects 1 mm (0.04 in) in diameter and larger | 4 | Protection against splashed water |
| 5 | Protected against dust | 5 | Protection against water jets |
| 6 | Dust tight | 6 | Protection against high pressure water jets |
| 7 | -- | 7 | Protection against intermittent submersion in water |
| 8 | -- | 8 | Protection against continuous submersion in water |

## Protective Features

All NORD Motors and Speed Reducers are constructed to provide a high degree of protection against wet and severe environments. NORD Motors and Speed Reducers are extremely well sealed against moisture ingress and use corrosion and moisture resistant components. NORD has recently made many enhancements in the motor and gear units standard construction to provide improved environmental protection. Many of the standard protection features of the NORD units are only available at an additional cost from other motor and gear drive suppliers. NORD designs all gearmotors, speed reducers and motors for installation in harsh industrial, commercial and municipal installation environments.

## Standard Construction

- Shaft lip seals on both ends of the motor shafts
- Stator to endbell connections sealed to exclude moisture
- Double coated magnetic wire insulation
- Inverter/vector duty insulation system conforms to NEMA MG1-2006, section 31.4.4.2 voltage spikes
- Moisture resistant varnish dipped windings – improved varnish materials
- Inorganic insulating components for tropical protection
- Moisture resistant motor windings
- Conduit box sealed with gaskets
- Corrosion resistant alloy materials
- Threaded cable entry holes

### Motors for Indoor Operation - Option Codes

| | Dry Conditions | Wet or Humid Conditions |
|---|---|---|
| Ambient Temperature Fluctuation | – | KB, SH |
| Paint | – | NSD+ |
| Vertical Motor Mount  | RD | RDD |
| Brakemotor | – | RG |

### Motors for Outdoor Operation - Option Codes

| | Sheltered from the Elements | Exposed to the Elements |
|---|---|---|
| Ambient Temperature Fluctuation | KB, SH | KB, SH, KKV |
| Paint | NSD+ | NSDx3 |
| Vertical Motor Mount  | RD | RDD |
| Brakemotor | RG | RG |

### Option Code Key

| | | |
|---|---|---|
| KB | Condensation Drain Holes - Plugged | Page 701 |
| SH | Space Heater | Page 699 |
| KKV | Terminal Box Sealed with Resin | Page 701 |
| NSD+ | Nord Severe Duty Paint | Page 28 |
| NSDx3 | Nord Severe Extreme Duty X3 Paint | Page 28 |
| RD | Canopy Drip Cover | Page 701 |
| RDD | Double Fan Cover | Page 701 |
| RG | Corrosion Protected Brake | Page 737 |

MOTORS


Send Quote Requests to info@automatedpt.com
Call +1(800)985-6929 To Order or Order Online At Nordgearmotors.com

DRIVESYSTEMS



# General Options

## Voltage and Frequency

NORD motors are available in a number of voltages and frequencies. The standard voltages are commonly available. Optional voltages can be provided, but may include an increase in price and additional lead time. It also may be possible to provide motors with special voltages and frequency operation points.

### Standard Voltages

| Single speed motors | Two speed motors |
|---|---|
| 230/460V-60Hz (up to 30 hp) | 460V-60Hz |
| 460V-60Hz (40 hp and larger) | 230V-60Hz |
| 575V-60Hz | 575V-60Hz |
| 400V-50Hz | 400V-50Hz |

### Optional Voltages

| Single speed motors | Two speed motors |
|---|---|
| 208V-60Hz (up to 10 hp, not available in energy efficient design) | Other voltages & frequencies available upon request |
| 380V-50Hz | |
| 415V-50Hz | |
| 380V-60Hz | |
| Other voltages & frequencies available upon request | |

## Poles / speeds

NORD offers a variety of single speed and two speed motors in addition to the standard 4 pole motor. NORD single speed motors are inverter/vector duty rated, however, it is not recommended to run a NORD two speed motor with a frequency inverter.

| Number of Poles | Synchronous Speed at 60Hz | Synchronous Speed at 50Hz | Notes: |
|---|---|---|---|
| **Single Speed Motors** | | | |
| **4** | 1800 rpm | 1500 rpm | – |
| **2** | 3600 rpm | 3000 rpm | – |
| **6** | 1200 rpm | 1000 rpm | – |
| **Two Speed Motors** | | | |
| **4-2** | 1800/3600 rpm | 1500/3000 rpm | Single winding |
| **8-2** | 900/3600 rpm | 750/3000 rpm | Two winding |
| **8-4** | 900/1800 rpm | 750/1500 rpm | Single winding |

Other speeds available upon request.

## Motor Options & Construction

NORD motors are stocked in one of two ways. The first method is to stock a complete motor that is ready to be assembled to a gear reducer or shipped as a stand alone motor. The second method, the motor is assembled from component parts. The Mod next to a motor option designates that the option can be added to a complete motor by simple modification. The Build next to a motor option indicates that the motor will need to be built from component parts in order to incorporate the motor option.

## US Canadian Standard (CUS)

CUS motor construction defines that NORD motors are constructed in accordance to UL 1004 (electric motors) and CSA C22.2 No. 100-04 (motors and generators) guidelines. This option is standard for 208, 230, 460, and 575 Volt operation at 60 Hz.

Motors nameplated with the CUS option will be marked and indicating that the Underwriters Laboratories and CSA have tested and approved NORD motors according to both US and Canadian standards.




Send Quote Requests to info@automatedpt.com
Call +1(800)985-6929 To Order or Order Online At Nordgearmotors.com

Send Quote Requests to info@automatedpt.com Call +1(800)985-6929 To Order or Order Online At Nordgearmotors.com

# General Options



DRIVESYSTEMS

## Motor Protection

Selecting the appropriate motor protective system is a key factor in reliable motor operation. There are two common classes of motor protection; current based and motor temperature based. Electrical installation codes require at least two types of protection in the motors circuit, both of which are normally current based. First is short-circuit protection normally accomplished by fuses or circuit breakers. Second is "motor overload protection" this is normally a device called a "motor overload" or a "heater." Current based protection is effective in some conditions. NORD can provide two different types of motor temperature based protection, a PTC thermistor (TF) or a bi-metallic thermostat (TW). Temperature based protection is more effective motor protection in many situations, see the table below.

| ⬆ = Good protection<br>➡ = Limited protection<br>⬇ = No protection | Fuses | Motor Overloads | PTC Thermistor (TF) | Bi-metallic Switch (TW) |
|---|---|---|---|---|
| Over current up to 200% | ⬇ | ⬆ | ⬆ | ⬆ |
| High inertia starting | ⬇ | ➡ | ⬆ | ➡ |
| Frequent motor starts | ⬇ | ➡ | ⬆ | ⬆ |
| Stalling | ➡ | ➡ | ➡ | ➡ |
| Single phasing | ⬇ | ➡ | ⬆ | ⬆ |
| Supply voltage deviations | ⬇ | ⬆ | ⬆ | ⬆ |
| Supply frequency deviations | ⬇ | ⬆ | ⬆ | ⬆ |
| Inadequate motor cooling | ⬇ | ⬇ | ⬆ | ⬆ |
| Bearing Damage | ⬇ | ⬇ | ⬆ | ⬆ |

## Thermostat (TW)

Build

Three bimetallic switches are connected in series in the motor windings, one per motor phase. Upon reaching the limit temperature, this device automatically opens circuits. The installer is responsible to wire the thermostat into the motor control circuit. After the temperature has fallen below the trip limit, the thermostat switch re-sets automatically. The auto resetting property must be considered when designing the safety aspects of the control scheme.

| TW Ratings | |
|---|---|
| NC (Normally Closed) | auto resetting |
| Voltage | 6 to 500VAC |
| Current | 1.6 A |
| Resistance | less than 50 mΩ |

## Thermistor (TF)

Build

Three positive temperature coefficient (PTC) thermistors are connected in series in the motor windings, one per motor phase. Thermistors require an external tripping device. Upon reaching the limit temperature, the thermistors change their resistance suddenly. In connection with a tripping device, this property is employed to monitor the motor temperature. The relay built into the tripping device has a make-and-break-contact, which is used in the control wiring. NORD does not provide the external tripping device with the TF thermistor option. You must request a thermistor tripping device separately. Many Inverters and PLCs include a built in PTC thermistor evaluation input.

| TF Ratings | |
|---|---|
| Transition Temperature | 150 °C +/- 5°C |
| Resistance < Transition | 20 ... 500 . Ω |
| Resistance > Transition | > 4k Ω. |
| Reed Voltage | < 7,5 V |
| Rated Current | < 1 mA |
| Motor Ambient Temp. | 40°C |




Send Quote Requests to info@automatedpt.com
Call +1(800)985-6929 To Order or Order Online At Nordgearmotors.com

Send Quote Requests to info@automatedpt.com Call +1(800)985-6929 To Order or Order Online At Nordgearmotors.com







## Space Heater (SH)

Build

Motors subjected to extreme temperature fluctuations or severe climatic conditions can be damaged by the formation of condensation. NORD can provide motor anti-condensation space heaters inside the motor to heat up the windings when the motor is not operating. This will prevent moisture from condensing inside the motor. The space heaters must not be switched on while the motor is running.



**Space Heater Voltage Must be specified**

| Voltages available |
|---|
| ❍ 115V – 50/60Hz |
| ❍ 230V – 50/60Hz |
| ❍ 460V – 50/60Hz |
| ❍ other voltages available on request |

## Class H Insulation (ISO H)

Build

NORD motors can be manufactured with class H insulation system. Standard NORD motors include double coated magnetic wire windings. When these windings are paired with a class H insulation it provides extra temperature capacity for the motor and will lengthen the motor's life. Class H insulation rated motors are also an advantage in some severe applications:

- Increased ambient temperature installations – above 40°C (104°F)
- Increased elevation installations – above 3300 ft (1000 m)
- Applications with a high number of starts per hour.
- Meets class H insulation motor specifications
- Lower operating frequency when used with frequency inverter systems
- For additional information on insulation class see page 694.

## High Resistance Rotor (WU)

Build

Using Silumin rotor material, NORD offers a high resistance rotor to soften the motors operation and allow higher overload torques.

## Single Phase Motors, 60Hz (ECR)

Build

The ECR series of single phase motors is intended for demanding operation at 60Hz with a supply voltage of 115V or 230V. The permissible voltage range is 115/230V +/- 10%. The ECR motors have a 1.15 service factor and are available from 0.16 - 2 hp.





Send Quote Requests to info@automatedpt.com
Call +1(800)985-6929 To Order or Order Online At Nordgearmotors.com

# Environmental Options



## Paint Coatings

NORD's standard paint coating is a two component, aliphatic polyurethane finish contaning 316 stainless steel material.This gray stainless steel paint has excellent appearance and outstanding physical properties. It is suitable for both indoor and outdoor applications.

Advantages of NORD's stainless steel two component polyurethane:

- Excellent adhesion to cast iron, aluminum, steel, and plastics
- Excellent corrosion resistance
- Excellent chemical resistance
- Excellent gloss and color retention
- Suitable for indoor and outdoor exposure
- Nonporous and excellent abrasion resistance
- USDA/H1 compliant

NORD also offers a variety of severe duty paint coatings that provide a high level of protection against water and severe environments both indoors and outdoors. NSD+ (NORD Severe Duty) consists of a primer undercoat and a stainless steel polyurethane topcoat. For the most demanding environments, NORD offers NSD-X3 (NORD Severe Duty triple coated) which consists of a primer undercoat, stainless steel polyurethane coating, and a clear topcoat. Paint coatings are also available in alternate colors as seen in the table below.

Additionally a variety of coating options are available including our Severe Duty coatings:

| Finish | Color | Coating | Use |
|---|---|---|---|
| Standard (stainless steel paint) | Stainless steel silver (Gray) | 1 x Stainless steel (316) top coat (polyurethane) | Indoor or outdoor moderate environment |
| Alternate color | Black, Blue, Red, Orange | 1 x Color top coat (polyurethane) | Indoor or outdoor protected |
| **NSD+** | | | |
| NORD Severe Duty + NSD+ | Stainless steel silver (Gray) | 1 x Primer high solid alkyd system<br>1 x Stainless steel (316) top coat (polyurethane) | Indoor or outdoor moderate environment |
| NORD Severe Duty +W NSD+W | White | 1 x Primer high solid alkyd system<br>1 x White top coat (polyurethane) | Indoor or outdoor moderate environment |
| Alternate color NSD+ | Black, Blue, Red, Orange | 1 x Primer high solid alkyd system<br>1 x Color top coat (polyurethane) | Indoor or outdoor moderate environment |
| **NSD X3** | | | |
| NORD Severe Duty Extreme NSD-X3 | Stainless steel silver (Gray) | 1 x Primer high solid alkyd system<br>1 x Stainless steel (316) (polyurethane)<br>1 x Clear top coat (polyurethane) | Indoor or outdoor more severe environment |
| NORD Severe Duty Extreme NSD-X3W | White | 1 x Primer high solid alkyd system<br>1 x White (polyurethane)<br>1 x Clear top coat (polyurethane) | Indoor or outdoor more severe environment |
| Alternate color NSD-X3 | Black, Blue, Red, Orange | 1 x Primer high solid alkyd system<br>1 x Color (polyurethane)<br>1 x Clear top coat (polyurethane) | Indoor or outdoor more severe environment |

Special colors and paints possible please contact NORD with your specific requirements.




Send Quote Requests to info@automatedpt.com
Call +1(800)985-6929 To Order or Order Online At Nordgearmotors.com

Send Quote Requests to info@automatedpt.com Call +1(800)985-6929 To Order or Order Online At Nordgearmotors.com



# Environmental Options

## Condensation Drain Holes

NORD motors can be equipped with condensation drain holes. These drain holes are placed in the motor endbells at the lowest possible point. The drain holes are closed at the factory with plastic snap in plugs. They allow for condensation accumulation in the motor to drain after the closing plugs are removed.

The motor drain holes can be provided by NORD either open (KBO) or sealed with a closing plug (KB).

**CAUTION**

The motor must be installed in the mounting orientation specified on the nameplate or the drain holes will not function properly and may result with the motor filling with water.

## Condensation Drain Holes, Plugged (KB)

Build

KB drain holes are plugged for shipment. In order for the holes to effectively drain moisture, the plugs must be removed before using the motor.

## Condensation Drain Holes, Open (KBO)

Build

KBO drain holes are shipped open (not plugged).

## IP66 Enclosure Protection

Mod

NORD motors can be provided with an IP66 enclosure protection. IP66 protection is suitable for wet, high-pressure wash down and extremely dusty environments, and includes all requirements included in IP65 enclosure protection.

| IP | 1st digit Foreign body protection | IP | 2nd digit Water protection |
|---|---|---|---|
| 6 | Dust tight | 6 | Protection against high pressure water jets |

## Terminal Box Sealed with Resin (KKV)

Mod

Terminal boxes can be sealed with a flexible, electrically safe resin to ensure that contaminants, water, and moisture cannot pass through the terminal box into the stator body. This option is helpful in extremely dusty, wet and humid environments. Another environment where this option is helpful is in installations that have frequent large temperature swings where condensation may form.

## Additional Insulation (AICM)

Build

NORD can provide additional insulation inside the motor to provide additional electrical protection in extremely wet or corrosive environments. An electrically safe insulating material is coated internally in the stator windings and on the rotor body

## Epoxy Dipped Windings (EP)

Build

In extremely wet environments, the motor windings are dipped in epoxy for improved moisture protection. The motor can also be treated with the standard NORD Severe Duty + (NSD+) package for an even higher degree of protection.

## Canopy Drip Cover (RD)

Mod



For wet or dirty installations where the fan end of the motor is mounted up, thus allowing water or debris to fall into the motor's fan guard, NORD offers a canopy drip cover to block this falling water or debris.

## Double Fan Cover (RDD)

Mod



For wet or dirty installations where the fan end of the motor is mounted up, the NORD Double Fan Cover provides protection against falling or wind blown water, snow, dirt or debris from entering the back of the motor.

MOTORS


Send Quote Requests to info@automatedpt.com
Call +1(800)985-6929 To Order or Order Online At Nordgearmotors.com

# Inverter Related Options



## Blower Cooling Fan (F & FC)

Mod

NORD offers continuous running motor mounted cooling fans that provide motor cooling at low motor speeds. When a motor is operated on an inverter at low frequency, standard rotor fans do not provide adequate airflow for cooling. NORD's separate powered motor cooling fans provide that necessary airflow. These separately powered fans replace the standard motor fan cover and fan.

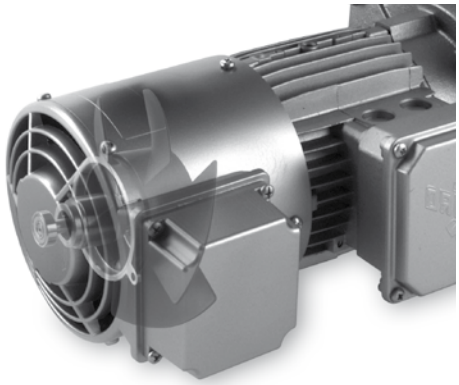

Blower Cooling Fan

### Option F – 3ph & 1ph 220-575V 50/60Hz

| Motor Frame | 60Hz Ratings | | | 50Hz Ratings | | |
|---|---|---|---|---|---|---|
| | Voltage [V] | Current [A] | Power [W] | Voltage [V] | Current [A] | Power [W] |
| Single phase connection - ⊥ (Delta) | | | | | | |
| 63 | 230 – 277 | 0.11 | 38 | 230 – 277 | 0.10 | 27 |
| 71 | 230 – 277 | 0.12 | 41 | 230 – 277 | 0.10 | 28 |
| 80 | 230 – 277 | 0.13 | 44 | 230 – 277 | 0.11 | 29 |
| 90 | 230 – 277 | 0.25 | 88 | 230 – 277 | 0.26 | 72 |
| 100 | 230 – 277 | 0.28 | 88 | 230 – 277 | 0.26 | 70 |
| 112 | 230 – 277 | 0.31 | 107 | 230 – 277 | 0.26 | 73 |
| 132 | 230 – 277 | 0.27 | 89 | 230 – 277 | 0.29 | 82 |
| 160 - 225 | 230 – 277 | 0.41 | 140 | 230 – 277 | 0.45 | 128 |
| Three phase low-voltage connection - (Delta) | | | | | | |
| 63 | 220 – 332 | 0.08 | 23 | 220 – 290 | 0.10 | 27 |
| 71 | 220 – 332 | 0.08 | 24 | 220 – 290 | 0.10 | 30 |
| 80 | 220 – 332 | 0.08 | 25 | 220 – 290 | 0.01 | 29 |
| 90 | 220 – 332 | 0.21 | 64 | 220 – 290 | 0.28 | 86 |
| 100 | 220 – 332 | 0.21 | 66 | 220 – 290 | 0.27 | 86 |
| 112 | 220 – 332 | 0.23 | 70 | 220 – 290 | 0.27 | 85 |
| 132 | 220 – 332 | 0.25 | 74 | 220 – 290 | 0.32 | 96 |
| 160 - 225 | 220 – 322 | 0.49 | 165 | 220 – 290 | 0.52 | 155 |
| Three phase high-voltage connection - (Y) | | | | | | |
| 63 | 380 – 575 | 0.04 | 23 | 380 – 500 | 0.05 | 29 |
| 71 | 380 – 575 | 0.04 | 25 | 380 – 500 | 0.05 | 30 |
| 80 | 380 – 575 | 0.04 | 26 | 380 – 500 | 0.05 | 29 |
| 90 | 380 – 575 | 0.12 | 62 | 380 – 500 | 0.16 | 82 |
| 100 | 380 – 575 | 0.12 | 66 | 380 – 500 | 0.16 | 83 |
| 112 | 380 – 575 | 0.13 | 70 | 380 – 500 | 0.16 | 82 |
| 132 | 380 – 575 | 0.14 | 75 | 380 – 500 | 0.18 | 96 |
| 160 - 225 | 380 – 575 | 0.28 | 165 | 380 – 500 | 0.29 | 155 |

### Option FC – 115V 50/60Hz 1ph

| Motor Frame | 60Hz Ratings | | | 50Hz Ratings | | |
|---|---|---|---|---|---|---|
| | Voltage [V] | Current [A] | Power [W] | Voltage [V] | Current [A] | Power [W] |
| Single Phase Connection - ⊥ (Delta) | | | | | | |
| 63 | 100 – 135 | 0.23 | 42 | 100 – 135 | 0.30 | 42 |
| 71 | 100 – 135 | 0.23 | 47 | 100 – 135 | 0.30 | 44 |
| 80 | 100 – 135 | 0.27 | 57 | 100 – 135 | 0.30 | 43 |
| 90 | 100 – 135 | 0.46 | 102 | 100 – 135 | 0.57 | 78 |
| 100 | 100 – 135 | 0.53 | 105 | 100 – 135 | 0.54 | 78 |
| 112 | 100 – 135 | 0.60 | 115 | 100 – 135 | 0.55 | 80 |




Send Quote Requests to info@automatedpt.com
Call +1(800)985-6929 To Order or Order Online At Nordgearmotors.com



# Inverter Related Options

## Incremental Encoder (IG..P)

Build

NORD can provide an incremental encoder mounted on the back of a motor or brake motor. Commonly encoders are used as speed or position feedback devices for use with AC drives, motion controllers or PLC's. Below are standard encoders; however, others can be supplied on request.

**Encoder nomenclature must be specified.**

**Encoder nomenclature** _____



**Encoder Type: Quadrature Differential Marker pulse**

M12 Connector Interface

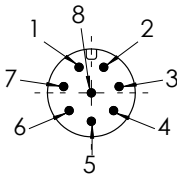


**Wiring Diagram**

| Pin | Conn | Cord |
|---|---|---|
| 1 | 0V | WH |
| 2 | +V | BN |
| 3 | A | GN |
| 4 | A\ | YE |
| 5 | B | GY |
| 6 | B\ | PK |
| 7 | Z | BU |
| 8 | Z\ | RD |
| Nut | Gnd | Open |

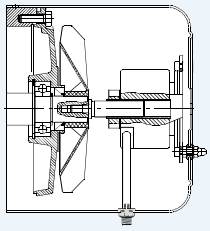

**Standard Motor with Encoder**

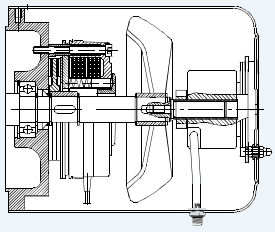

**Encoder with Brake Option**

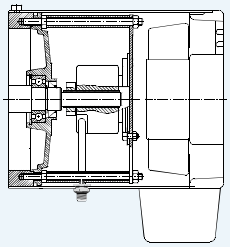

**Encoder with F Type Blower Fan**

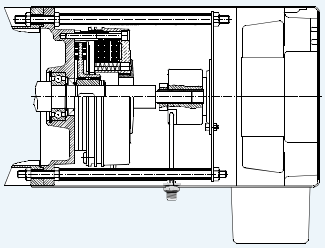

**Brake Option, Blower Fan with Encoder**

| | IG1 P | IG4 P | IG11 P | IG41 P | IG12 P | IG42 P | IG13 P | IG43 P |
|---|---|---|---|---|---|---|---|---|
| **Interface** | TTL/RS422 (26C31) | | TTL/RS422 (26C31) | | HTL/Push-pull (IC-WE) | | Line Driver (7272) | |
| **Logic [VDC]** | 5 | | 5 | | 10-30 | | 5-30 | |
| **Pulse Count [PPR]** | 1024 | 4096 | 1024 | 4096 | 1024 | 4096 | 1024 | 4096 |
| **Power Supply [VDC]** | 4-6 | 4-6 | 10-30 | 10-30 | 10-30 | 10-30 | 5-30 | 5-30 |
| **Part Number** | 19551500 | 19551520 | 19551502 | 19551522 | 19551501 | 19551521 | 19551503 | 19551523 |
| **Max Current Draw [mA]** | 100 | | | | 150 | | | |
| **Max Frequency [kHz]** | 300 | | | | | | | |
| **Ambient Temperature [°F]** | -4 to185 | | | | | | | |
| **Enclosure** | IP66 | | | | | | | |
| **Cable** | M12 8-pin male plug | | | | | | | |

MOTORS

## Pre-fabricated Encoder Cables



NORD can provide Turck pre-fabricated encoder molded cordsets (M12, 8-pin, shielded, twisted pair)

| Length | In-line | | Right-angle | |
|---|---|---|---|---|
| | NORD P/N | Turck P/N | NORD P/N | Turck P/N |
| **2m** | 19551580 | E-RKC 8T-264-2 | 19551584 | E-WKC 8T-264-2 |
| **5m** | 19551581 | E-RKC 8T-264-5 | 19551585 | E-WKC 8T-264-5 |
| **10m** | 19551582 | E-RKC 8T-264-10 | 19551586 | E-WKC 8T-264-10 |
| **15m** | 19551583 | E-RKC 8T-264-15 | 19551587 | E-WKC 8T-264-15 |
| **Field Wireable** | 19551588 | CMB 8180-0 | - | - |
| **Custom** | order from Turck | E-RKC 8T-264-* | order from Turck | E-WKC 8T-264-* |

- The above encoder cables are provided with the shielding NOT connected thru the plug nut
- Providing a conducting path thru the cable nut and attaching the shield to ground on both ends of cable is a possible source of electrical noise


Send Quote Requests to info@automatedpt.com
Call +1(800)985-6929 To Order or Order Online At Nordgearmotors.com

Send Quote Requests to info@automatedpt.com Call +1(800)985-6929 To Order or Order Online At Nordgearmotors.com

# Inverter Related Options



DRIVESYSTEMS

## Encoders for NORD AC Drives

NORD frequency inverters with encoder inputs are designed to use TTL/RS422 encoders. There are also advantages in using an encoder with the 10-30VDC power supply system. The NORD inverters can use a wide range of pulse counts, however the 1024PPR version provides good performance with minimal interference issues. A 4096 PPR encoder can also be used and will provide increased precision in some applications, but has some increased concerns with noise interference.

**Recommended encoder:** IG11P – 1024PPR/TTL/10-30VDC
**Alternate encoder:** IG41P – 4096PPR/TTL/10-30VDC

## Absolute Encoder (AG)

Build

Absolute encoders offer a unique value (voltage, binary count, etc.) for each mechanical position. When an absolute encoder is powered up, the position of the encoder is known. Absolute encoders are available in single or multi-turn versions. The encoder is attached under the fan cover with field bus connection outside the fan cover.

Absolute encoders can be provided to meet a variety of specifications:

- Resolution: up to 17 bits of resolution per turn (131,072 steps) with 4096 turns (12 bits of turns)
- Interfaces: Synchronous serial interface (SSI), SSI with incremental track, ProfiBus, DeviceNet, CANopen, CANlift, and other interfaces

MOTORS


Send Quote Requests to info@automatedpt.com
Call +1(800)985-6929 To Order or Order Online At Nordgearmotors.com

Send Quote Requests to info@automatedpt.com Call +1(800)985-6929 To Order or Order Online At Nordgearmotors.com





## NORDAC SK 300E
## Motor Mounted Frequency Inverter

For select HP ratings, NORD can provide a fully programmable, high performance AC vector frequency inverter mounted on the motor. This motor mounted inverter:

- Eliminates the need to separately mount & wire the inverter
- Insures inverter/motor compatibility
- Has an IP 55 washdown duty enclosure
- Provides Electronic Motor Overload protection
- Insures smooth constant torque operation down to 2 Hz (check motor thermal limitations)
- Features a unique plug-in construction where the program stays with the motor, minimizing return to service time in the event of inverter replacement

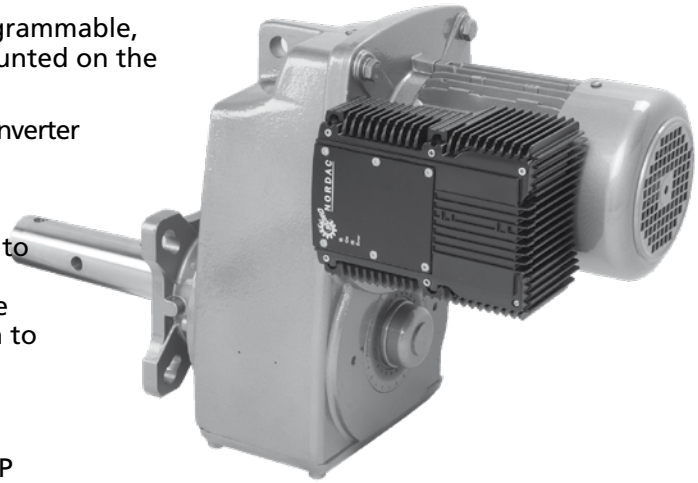

### SK 300E Inverter Ratings

- 200-240 VAC 3 phase 50/60 Hz input, ½ through 3 HP
- 380-480 VAC 3 phase 50/60 Hz input, 3/4 through 5 HP
- Full range of built-in pre-engineered options available

### Selection Steps

1) Choose the SK300E-trio inverter based on motor ratings and input line voltage
2) Select the required Trio Interface (TI)
3) Select the braking resistor if required
4) Select additional customer based I/O if required (SK CU2-STD)
5) Select cover mounted technology unit if required
6) If remote wall mounting is required
7) Select any needed programming tools

MOTORS

### Step 1: Inverter Selection

| Basic NORD Motor Description | Power Rating HP/kW | P [in] | 240 VAC Input Inverter Type SK 300E | 480 VAC Input Inverter Type SK 300E |
|---|---|---|---|---|
| 63 S/4 | 0.16 / 0.12 | 5.12 | -370-323-B | -550-340-B |
| 63 L/4 | 0.25 / 0.18 | 5.12 | -370-323-B | -550-340-B |
| 71 S/4 | 0.33 / 0.25 | 5.71 | -370-323-B | -550-340-B |
| 71/L/4 | 0.50 / 0.37 | 5.71 | -370-323-B | -550-340-B |
| 80 S/4 | 0.75 / 0.55 | 6.5 | -550-323-B | -550-340-B |
| 80 L/4 | 1.00/ 0.75 | 6.5 | -750-323-B | -750-340-B |
| 90 S/4 | 1.50/ 1.1 | 7.2 | -111-323-B | -111-340-B |
| 90 L/4 | 2.00/ 1.5 | 7.2 | -151-323-B | -151-340-B |
| 100 L/4 | 3.00/ 2.2 | 7.91 | -221-323-B | -221-340-B |
| 100 LA/4 | 5.00/ 3.7 | 7.91 | Not Available | -401-340-B |

### Inverter Ratings

| Type designation SK 300E | -370-323-B | -550-323-B | -750-323-B | -111-323B | -151-323-B | -221-323-B | -550-340-B | -750-340-B | -111-340-B | -151-340-B | -221-340-B | -301-340-B | -401-340-B |
|---|---|---|---|---|---|---|---|---|---|---|---|---|---|
| Supply Voltage | 3 Phase 200-240 VAC +/- 10%, 47-63 Hz | | | | | | 3 Phase 380-480 VAC, -20%/+10%, 47-63 Hz | | | | | | |
| Motor Rating | 1/2 HP | 3/4 | 1 HP | 1 1/2 HP | 2 HP | 3 HP | 3/4 HP | 1 HP | 1 1/2 HP | 2 HP | 3 HP | 4 HP | 5 HP |
| Rated Output Current Amps [RMS] | 2.2 | 3 | 4 | 5.5 | 7 | 9.5 | 1.6 | 2.2 | 3 | 3.7 | 5.5 | 7 | 9.2 |
| Typical Output Current Amps [RMS] | 3.1 | 4.2 | 5.6 | 7.7 | 9.8 | 13.3 | 2.5 | 3.1 | 4.2 | 5.2 | 7.7 | 9.8 | 12.9 |


Send Quote Requests to info@automatedpt.com
Call +1(800)985-6929 To Order or Order Online At Nordgearmotors.com

Send Quote Requests to info@automatedpt.com Call +1(800)985-6929 To Order or Order Online At Nordgearmotors.com

# Inverter
# SK 300E Trio



DRIVESYSTEMS

## Step 2: Selection of Trio Interface (TI)

Following selection of the appropriate SK 300E inverter rating from the preceding chart, an appropriate Trio Interface (TI) must be specified. The Trio Interface (TI) is an adapter that replaces the motor conduit box and contains a circuit board that the SK 300E plugs into.

A typical TI is shown below

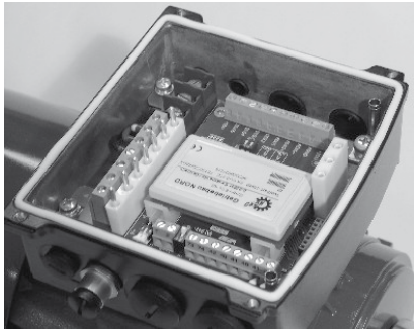

### SK 300E Trio Interface (TI) Types

| | |
|---|---|
| **SK TI 0/1** | For standard 380-480 VAC units |
| **SK TI 0/1 - 230** | For standard 200-240 VAC units |
| **SK TI 0/2** | For 380-480 VAC units using Harting connectors |
| **SK TI 0/2 – 230** | 200-240 VAC units using Harting connectors |

### Harding H10E series connector options for side 1(CE1) of SK TI 0/2 (and -230) Interfaces

| | |
|---|---|
| **LE H10E** | Socket for AC supply input |
| **MA H10E** | Plug for motor output |

### Conduit plate options for side 3(CE3) of SK TI 0/2 (and -230) Interfaces

| | |
|---|---|
| **SK DA4** | Plate with 4 x M16 |
| **SK DA2** | Plate with 2 x M20 and 1 x M16<br>(Provided as standard with SK TI 0/2) |
| **SK DA1** | Plate with 1 x M25 and 2 x M16 |
| **SK DA0** | Plate with no entries |

### Added related components for Trio Interfaces

| | |
|---|---|
| **P/N 018524200** | M20 x ½ adapter<br>(Qty 2 provided as standard on assembled trios) |
| **P/N 011015410** | Adapter to mount Trio Interface on 63 & 71 frame motors |
| **P/N 013097000** | Gasket to mount Trio Interface on 63 & 71 frame motors |

## SK 300E Options & Related Information

## Step 3: Braking Resistors

Braking Resistor Options for SK 300E for mounting on Trio Interface

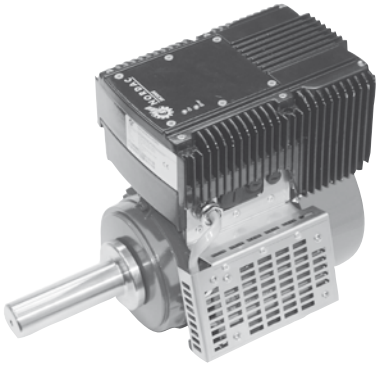

During dynamic braking, energy is delivered from the load through the motor (acting as a generator) to the frequency inverter. The inverter dissipates this energy as heat via the integral brake chopper to the optional external braking resistors.

### For use with SK TI 0/1 adapters

| | |
|---|---|
| **SK BR3-120/100-TI 0/1** | 120 ohm/100 W for all ratings except 5 HP |
| **SK BR3-82/200-TI 0/1** | 82 ohm/200 W for 5 HP only |

### For use with SK TI 0/2 adapters

| | |
|---|---|
| **SK BR3-120/100-TI 0/2** | 120 ohm/100 W for all ratings except 5 HP |
| **SK BR3-82/200-TI 0/2** | 82 ohm/200 W for 5 HP only |

MOTORS


Send Quote Requests to info@automatedpt.com
Call +1(800)985-6929 To Order or Order Online At Nordgearmotors.com

Send Quote Requests to info@automatedpt.com
Call +1(800)985-6929 To Order or Order Online At Nordgearmotors.com







## Step 4: Customer I/O Based Control Interface Option - SK CU2-STD

The standard I/O based control available via the Trio Interface can be expanded via selection of an optional Customer Unit, **SK CU2-STD**, that plugs into the Trio Interface. Interface I/O points are listed on the following chart:




| I/O on standard Trio Interface | Additional I/O on SK CU2-STD Option |
|---|---|
| 1 X programmable digital input | 4 X programmable digital input |
| 5 VDC and 15 VDC power supplies | 2 X single-ended analog inputs |
| RS 485 interface via M-12 connector and terminals | +10 VDC reference supply |
| 1 X programmable relay output | 1 X selectable/programmable analog/digital output |
| | PID control access |

## Step 5: Cover Mounted Technology Unit (TU) Options

A variety of pre-engineered plug in Technology Unit (TU) options can be ordered to replace the standard blank cover of the SK 300E inverter. Only a single TU can be installed on the inverter at a given time. Available units include operator and field bus interfaces:




| Technology Unit (TU) Name | Description |
|---|---|
| SK TU2-POT | Analog reference potentiometer box with L/Off/R control switch |
| SK TU2-CTR | Digital control/programmer with 4 digit, 7 segment LED display |
| SK TU2-PBR | Profibus field bus interface |
| SK TU2-PBR-24V | Profibus field bus interface powered by customer 24 VDC supply |
| SK TU2-PBR-KL | Profibus field bus interface with clamp on connectors |
| SK TU2-AS1 | AS (Actuator/Sensor) Interface |
| SK TU2-CAO | CANopen field bus interface |
| SK TU2-DEV | DeviceNet field bus interface |
| SK TU2-IBS | InterBus field bus interface |
| SK TU2-DECKEL | Original blank cover for TU slot (in case TU option is removed) |

## Step 6: Wall Mounting Option Kit, SK WMK-DA1

The wall mounting kit enables mounting the SK 300E inverter on a nearby wall or the machine instead of directly on the NORD motor or gearmotor. The Trio Interface (TI) is still required and all other options can be used.

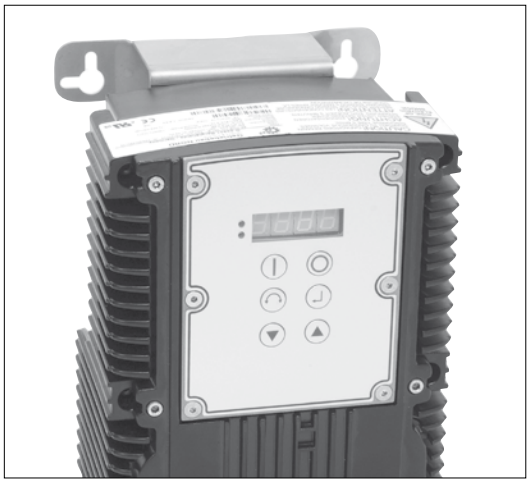




Send Quote Requests to info@automatedpt.com
Call +1(800)985-6929 To Order or Order Online At Nordgearmotors.com

Send Quote Requests to info@automatedpt.com
Call +1(800)985-6929 To Order or Order Online At Nordgearmotors.com





DRIVESYSTEMS

## Step 7 : Additional Tools & Related Interface Options

In addition to the cover mounted SK TU2-CTR option, there are several additional options that enable simple programming and control of the SK 300E:

**Handheld Parameter Box (P-Box) with 10 foot cable, SK PAR-2H**

Detachable external add-on unit that can be used to program and display parameters and control the operation of the connected SK 300E. Features multi-line plain text display selectable in six languages. Manages and stores up to five unique inverter programs. Cable plugs into M-12 connector in side of Trio Interface.

**Panel Mount Parameter Box (P-Box), SK PAR-2E**

Panel Mount version of Parameter Box with same functionality as SK PAR-2H. Installs in cut-out in front of customer supplied operator panel. Interface connection is performed by customer with their shielded cable via terminals on SK PAR-2E and SK 300E.



### NORD CON Software – Available free at NORD Website

NORD CON Software is a Windows-based PC program that enables the control and programming of NORDAC Frequency Inverters. It provides for accessing up to 31 Frequency Inverters simultaneously via the RS485 interface. It features both off-line and on-line programming and data management modes.

NORD CON allows user to:

- Program inverters & upload/download parameter files
- Control connected inverters for test/troubleshooting
- Monitor connected inverters and examine up to four variables versus time with built-in oscilloscope feature
- Display parameter information in six languages

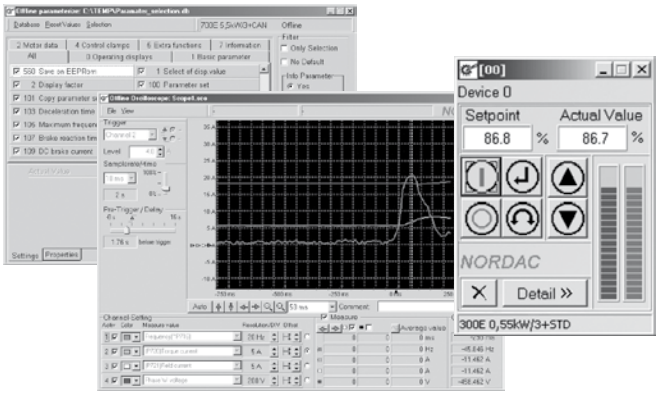


**Optional accessories required to interface user PC to SK 300E via NORD CON are:**

**SK IC1 – RS 485 to RS 232 interface converter**
Enables communication between RS 232 port on computer and RS 485 port on SK 300E

**Cable SK 300E –**
10 foot cable that connects between the 9-Pin D shell connector on the SK IC1 and the M-12 connector on the side of the SK 300E Trio Interface.

### Electromechanical Brake Interface & Coil Voltage Selection

As standard, the SK 300E provides a dedicated high voltage DC power supply and coordination software to directly control an Electromechanical Brake. This is equivalent to using a half wave rectifier, so the brake coil voltage must be specified per the following chart:

| Nominal Inverter AC Input Voltage | Brake Coil Voltage |
|---|---|
| 440 – 480 VAC | 205 VDC |
| 200 – 240 VAC | 105 VDC |
| 380 – 415 VAC | 180 VDC |

The brake gets connected to terminals +Br and –Br on the Trio Interface

### Motor overload protection

Electronic motor overload protection is provided as standard on the SK 300E inverter. If required, more precise protection can be achieved via the use of motor thermostats (TW) or thermistor sensors (TF). See page 698 for detailson these motor options. These devices can be interfaced to the SK 300E via the programmable digital input to indicate a motor over temperature error.




Send Quote Requests to info@automatedpt.com
Call +1(800)985-6929 To Order or Order Online At Nordgearmotors.com

Send Quote Requests to info@automatedpt.com Call +1(800)985-6929 To Order or Order Online At Nordgearmotors.com





## Totally Enclosed Non-Ventilated (OL) Mod

NORD can provide totally enclosed non-ventilated (TENV) motor enclosure. TENV motors provide benefits in certain operating environments; such as extremely dusty or dirty applications, where cooling fans may have material accumulation, which can be detrimental to the motor and the application. The OL series of motors are the standard fan cooled motor construction including the fan cover, but provided without the fan. TENV motors can also be used to reduce cooling fan noise on a standard motor.

A TENV motor's frame size is larger then a totally enclosed fan cooled (TEFC) motor. For intermittent operation, a TENV motor can be operated at a 50% duty cycle at full rated power.

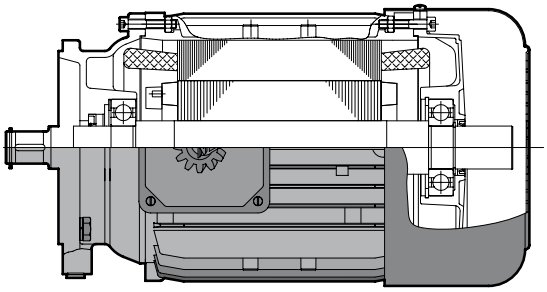

## Totally Enclosed Non-Ventilated, without Fan Cover (OL/H) Build

The OL/H series of TENV motors are more compact in space than the OL series. They do not include the rotor shaft extension through the back bearing end bell or the fan cover.

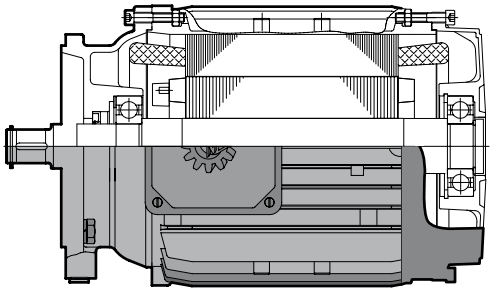

## 2nd Shaft Extension on Fan Side (WE) Build

NORD can provide a second shaft extension on the fan side of the motor that protrudes through the fan cover. This extension can be used as a power take-off or to mount customer supplied devices such as encoders and tachometers.

The shaft extension can be provided on both motors with and without brakes. The shaft extension can not be used on motors with blower fans (F) or (FC). For dimensions see pages 720 - 721.

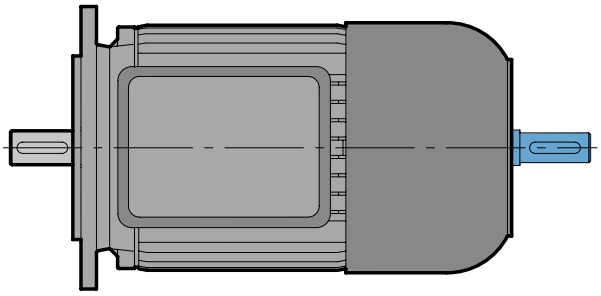

## Hand Wheel (HR) Build

Motors can be supplied with a hand wheel provided on the second shaft extension. The hand wheel can be used for manual operation during power outages, or for machine positioning setup. For dimensions see pages 720 - 721.

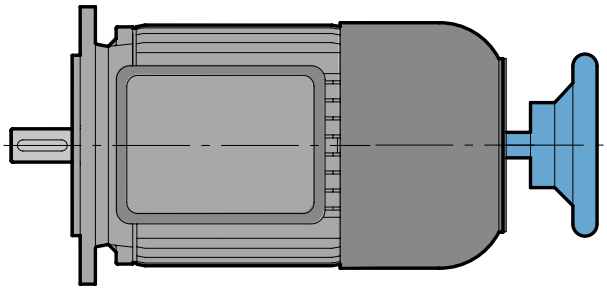

**Warning**

The customer is required to provide appropriate safety guarding of the rotating hand wheel.

MOTORS



Send Quote Requests to info@automatedpt.com
Call +1(800)985-6929 To Order or Order Online At Nordgearmotors.com

# Additional Options



## High Inertia Cast Iron Fan (Z)

Build

An optional cast iron motor cooling fan is available. This fan is used as a mechanical soft start and/or soft stop. This fan adds inertia to the motor. The high inertia fan can also be used for a flywheel effect to store mechanical energy. This can be helpful in smoothing rapid load changes. The cast iron fan replaces the standard plastic motor fan. The motor length is the same as a brakemotor.

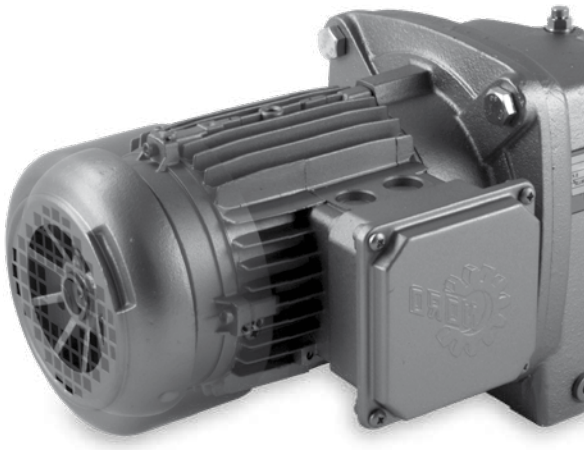

| Motor Frame | Fan Inertia $J_z$[lb-ft²] |
|---|---|
| 71 | 0.0475 |
| 80 | 0.1140 |
| 90 | 0.2375 |
| 100 | 0.2684 |
| 112 | 0.5653 |
| 132 | 0.9500 |

Build

## Motor Backstop (RLS)

NORD can provide backstops on many motor frames. A backstop will prevent the motor from rotating in one direction. A common use is to prevent a motor from allowing a load to move backwards when power is removed. A motor brake can also be used for this same purpose.

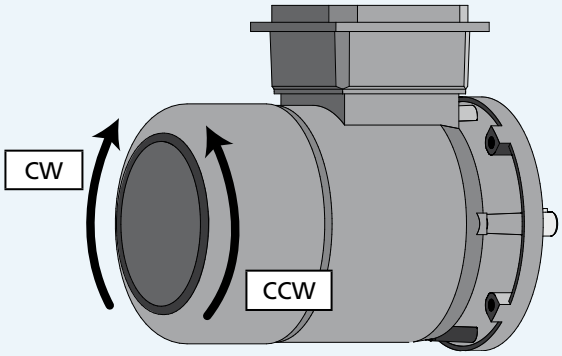


**The allowable direction of rotation must be specified in the order.**

| Allowable Shaft Rotation |
|---|
| Clockwise - Back of Motor |
| Counter Clockwise - Back of Motor |

| Motor Size | Backstop Torque [lb-in] | Minimum Speed [rpm] | Motor Extension [in] |
|---|---|---|---|
| 80S/L | 1150 | 860 | 2.52 |
| 90S/L | 1150 | 860 | 2.95 |
| 100L | 1150 | 860 | 3.58 |
| 112M | 3270 | 750 | 3.66 |
| 132S/M | 3270 | 750 | 4.21 |
| 160M/L | 7880 | 670 | 6.57 |
| 180MX/LX | 7880 | 670 | 6.73 |
| 200L | 9120 | 630 | 6.57 |
| 225S/M | 9120 | 630 | 6.57 |
| 250M | 22130 | 400 | 9.84 |
| 280S/M | 51330 | 320 | 11.02 |




Send Quote Requests to info@automatedpt.com
Call +1(800)985-6929 To Order or Order Online At Nordgearmotors.com

DRIVESYSTEMS



# Additional Options

## Quick Power Plug Connector (MS)

Mod

The quick power plug connector (MS) is a simple and fast way to connect and disconnect a motor or brake motor. The MS connector is available on NORD three-phase motors from frame size 63 to 132. The motor connections are made by a modular power plug manufacturer by Harting. After the first installation, the motor can be quickly changed by simply plugging and unplugging the electrical connections. This will ensure the new motor is properly wired. This is a significant advantage to equipment builders who fabricate machinery on site and then ship to another location. The motor with the MS connector can simply be plugged in during final installation.

NORD supplies the male connector half mounted on the motor conduit box. The customer must supply the female connector half mounted on the power wiring. NORD supplies a protective plastic cover on the motor male connector half to protect from dirt and damage prior to installation.

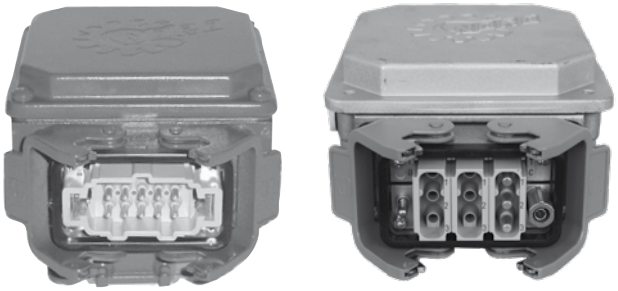

### Advantages:

- Simple motor wiring
- Accurate wiring of motor at final job site
- Fast motor replacement
- Accurate wiring of replacement motor
- Ideal for portable equipment
- Reduces the required personnel for motor replacement
- Faster motor changes reduce down time

## Plug ratings:

| | |
|---|---|
| **Manufacturer** | Harting |
| **Connector** | HAN 10 ES/HAN 10ESS Cage Clamp Connectors |
| **Number of Pins** | 10-Male |
| **Voltage** | 600VAC per UL/CSA |
| **Current** | 16A - Continuous |

## Motor Power Plug Kits:

Includes conduit box, mounting hardware and Male Harting Motor Plug

| P/N | Motor size |
|---|---|
| 11035350 | 63 + 71 |
| 13035350 | 80 + 90 + 100 |
| 16035350 | 112 |
| 16335350 | 132 |

## Power Plug Positions

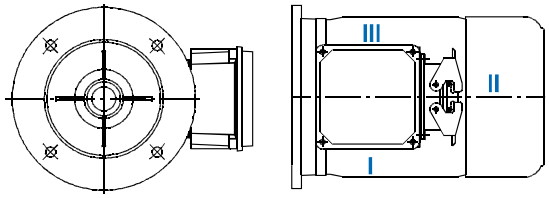


**Power plug position must be specified**

| Power Plug Position | | |
|---|---|---|
| ❍ I | ❍ II | ❍ III |

## Small Terminal Box (EKK)

Mod

The motor terminal box can be provided as a smaller, one-piece terminal design. This option is valid for standard motors 0.16 - 10 hp and is not available for Brakemotors.

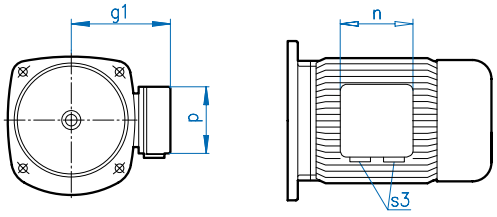


| EKK Dimensions | | | | |
|---|---|---|---|---|
| **Motor Frame** | **g1** | **n** | **p** | **S3** |
| **63** | 3.94 | 2.95 | 2.95 | 2x M16 x 1.5 |
| **71** | 4.29 | 2.95 | 2.95 | 2x M16 x 1.5 |
| **80** | 4.88 | 3.62 | 3.62 | 2x M20 x 1.5 |
| **90** | 5.08 | 3.62 | 3.62 | 2x M20 x 1.5 |
| **100** | 5.51 | 3.62 | 3.62 | 2x M20 x 1.5 |
| **112** | 5.91 | 3.62 | 3.62 | 2x M20 x 1.5 |
| **132** | 6.85 | 4.13 | 4.13 | 2x M25 x 1.5 |

MOTORS


Send Quote Requests to info@automatedpt.com
Call +1(800)985-6929 To Order or Order Online At Nordgearmotors.com

# Performance Data



DRIVESYSTEMS

## Standard Efficiency

## 230/460V – 60Hz

Inverter duty • TEFC
Synchronous speed 1800rpm @ 60Hz • 4-pole • Three-phase
Voltages: 230/460V – 60Hz • 1.15 Service Factor
Continuous Duty • 40°C Ambient • up to 3300ft Elevation
Class B temperature rise • Class F insulation

| Motor Type | Power Pn | | Nn Full-load | In Full-Load Current 230V[a] | In Full-Load Current 460V[a] | Ia/In | Code Letter | Torque Tn | Ta/Tn | Tk/Tn | pf | Eff. | Jm Inertia |
|---|---|---|---|---|---|---|---|---|---|---|---|---|---|
| | [hp] | [kW] | [rpm] | [A] | [A] | [%] | | [lb-in] | | | | [%] | [lb-ft²] |
| **63S/4** | 0.16 | 0.12 | 1700 | 0.88 | 0.44 | 245 | F | 5.92 | 2.1 | 2.2 | 0.66 | 52 | 0.005 |
| **63L/4** | 0.25 | 0.18 | 1680 | 1.12 | 0.56 | 275 | E | 8.99 | 2.1 | 2.2 | 0.71 | 57 | 0.0067 |
| **71S/4** | 0.33 | 0.25 | 1710 | 1.56 | 0.78 | 310 | G | 12.3 | 2.5 | 2.4 | 0.64 | 63 | 0.017 |
| **71L/4** | 0.5 | 0.37 | 1720 | 1.90 | 0.95 | 355 | F | 18.0 | 2.45 | 2.6 | 0.69 | 71 | 0.0204 |
| **80S/4** | 0.75 | 0.55 | 1710 | 2.70 | 1.35 | 355 | F | 27.0 | 2.2 | 2.2 | 0.71 | 72 | 0.0259 |
| **80L/4** | 1 | 0.75 | 1650 | 3.66 | 1.83 | 390 | G | 38.1 | 2.2 | 2.3 | 0.74 | 70 | 0.0345 |
| **90S/4** | 1.5 | 1.1 | 1660 | 4.84 | 2.42 | 445 | G | 55.6 | 2.7 | 2.6 | 0.78 | 73 | 0.055 |
| **90L/4** | 2 | 1.5 | 1660 | 6.34 | 3.17 | 465 | G | 75.8 | 2.55 | 2.5 | 0.80 | 74 | 0.074 |
| **100L/4** | 3 | 2.2 | 1705 | 9.0 | 4.50 | 490 | G | 108 | 2.3 | 2.6 | 0.81 | 82 | 0.107 |
| **100LA/4** | 5 | 3.7 | 1725 | 15.2 | 7.62 | 510 | G | 180 | 2.7 | 3.1 | 0.75 | 81 | 0.141 |
| **132S/4** | 7.5 | 5.5 | 1735 | 19.8 | 9.9 | 545 | G | 267 | 2.45 | 2.75 | 0.82 | 86 | 0.55 |
| **132M/4** | 10 | 7.5 | 1735 | 25.8 | 12.9 | 645 | H | 363 | 2.9 | 3.2 | 0.84 | 87 | 0.752 |
| **160M/4** | 15 | 11 | 1770 | 38.4 | 19.2 | 665 | H | 522 | 2.45 | 3.0 | 0.82 | 88 | 0.95 |
| **160L/4** | 20 | 15 | 1765 | 49 | 24.5 | 725 | H | 713 | 2.9 | 3.3 | 0.86 | 89.4 | 1.23 |
| **180MX/4** | 25 | 18.5 | 1750 | 60 | 30 | 860 | K | 887 | 2.95 | 3.4 | 0.87 | 89 | 1.35 |
| **180LX/4** | 30 | 22 | 1755 | 71 | 35.5 | 980 | L | 1052 | 3.4 | 3.7 | 0.87 | 89.4 | 1.35 |
| **200L/4** | 40 | 30 | 1780 | 96 | 48 | 770 | J | 1414 | 2.9 | 3.6 | 0.85 | 92 | 5.70 |
| **225S/4** | 50 | 37 | 1765 | - | 58 | 760 | H | 1759 | 3.1 | 3.5 | 0.86 | 93.1 | 7.60 |
| **225M/4** | 60 | 45 | 1770 | - | 70 | 840 | J | 2133 | 3.1 | 3.6 | 0.86 | 93.8 | 8.54 |
| **250M/4** | 75 | 55 | 1782 | - | 89 | 700 | H | 2636 | 2.8 | 3.2 | 0.84 | 93.7 | 16.4 |
| **280S/4** | 100 | 75 | 1788 | - | 118 | 830 | J | 3497 | 2.9 | 3.5 | 0.84 | 94.4 | 30.6 |
| **280M/4** | 125 | 90 | 1786 | - | 144 | 810 | J | 4385 | 2.8 | 3.3 | 0.86 | 95.1 | 34.9 |
| **315S/4** | 150 | 110 | 1788 | - | 176 | 720 | H | 5255 | 2.8 | 3.1 | 0.84 | 94.7 | 47.5 |
| **315M/4** | 175 | 132 | 1790 | - | 200 | 800 | J | 6125 | 3.0 | 3.4 | 0.85 | 95.4 | 58.4 |
| **315Ma/4** | 200 | 150 | 1790 | - | 230 | 810 | J | 7003 | 3.2 | 3.6 | 0.86 | 95.7 | 71.4 |
| **315L/4** | 250 | 187 | 1790 | - | 280 | 850 | J | 8734 | 3.2 | 3.3 | 0.87 | 96.3 | 92.8 |

a) Motors frame 225 and larger are standardly provided as single-voltage 460V and not as dual voltage

**Pn** - Full load power
**Nn** - Full load speed
**In** - Full load current
**Ia** - Locked-rotor current
**Ia/In** - Locked-rotor current ratio (%)
**Tn** - Full-load torque
**Ta** - Locked-rotor torque
**Ta/Tn** - Locked-rotor torque ratio
**Tk** - Break-down torque
**Tk/Tn** - Break-down torque ratio
**pf** - Power factor
**Eff** - Normal efficiency
**Jm** - Motor inertia

MOTORS


Send Quote Requests to info@automatedpt.com
Call +1(800)985-6929 To Order or Order Online At Nordgearmotors.com

DRIVESYSTEMS



# Performance Data

## Energy Efficient (EPAct)

# 230/460V – 60Hz / EE

Inverter duty • TEFC
Synchronous speed 1800rpm @ 60Hz • 4-pole • Three-phase
Voltages: 230/460V – 60Hz • 1.15 Service Factor
Continuous Duty • 40°C Ambient • up to 3300ft Elevation
Class B temperature rise • Class F insulation

| Motor Type | Power Pn | | Nn Full-load | In Full-Load Current 230V[a] | In Full-Load Current 460V[a] | Ia/In | Code Letter | Torque Tn | Ta/Tn | Tk/Tn | pf | Eff. | Jm Inertia |
|---|---|---|---|---|---|---|---|---|---|---|---|---|---|
| | [hp] | [kW] | [rpm] | [A] | [A] | [%] | | [lb-in] | | | | [%] | [lb-ft²] |
| 80LH/4 | 1 | 0.75 | 1750 | 3.88 | 1.94 | 600 | L | 36.0 | 4.6 | 4.3 | 0.59 | 82.5 | 0.051 |
| 90SH/4 | 1.5 | 1.1 | 1740 | 4.3 | 2.15 | 630 | J | 53.1 | 3.5 | 3.8 | 0.76 | 84.0 | 0.085 |
| 90LH/4 | 2 | 1.5 | 1745 | 6.3 | 3.15 | 670 | K | 72.1 | 4.3 | 4.5 | 0.71 | 84.0 | 0.092 |
| 100LH/4 | 3 | 2.2 | 1765 | 8.6 | 4.3 | 790 | L | 105 | 3.6 | 4.7 | 0.73 | 87.5 | 0.178 |
| 112MH/4 | 5 | 3.7 | 1770 | 14.4 | 7.2 | 810 | L | 176 | 4.0 | 4.8 | 0.76 | 87.5 | 0.304 |
| 132SH/4 | 7.5 | 5.5 | 1780 | 20.9 | 10.5 | 820 | L | 259 | 4.3 | 4.6 | 0.74 | 89.5 | 0.75 |
| 132MH/4 | 10 | 7.5 | 1770 | 27.0 | 13.5 | 735 | J | 356 | 3.2 | 4.0 | 0.78 | 89.5 | 0.84 |
| 160MH/4 | 15 | 11 | 1765 | 35.8 | 17.9 | 810 | J | 527 | 2.6 | 3.2 | 0.85 | 91.0 | 1.23 |
| 160LH/4 | 20 | 15 | 1765 | 49 | 24.5 | 850 | K | 712 | 2.8 | 3.5 | 0.85 | 91.0 | 1.35 |
| 180MH/4 | 25 | 18.5 | 1770 | 61 | 30.5 | 840 | K | 879 | 2.8 | 3.6 | 0.83 | 92.4 | 3.56 |
| 180LH/4 | 30 | 22 | 1770 | 72 | 36 | 880 | K | 1046 | 3.1 | 3.9 | 0.83 | 92.4 | 4.51 |
| 200LH/4 | 40 | 30 | 1770 | 94 | 47 | 830 | J | 1424 | 3.0 | 3.6 | 0.86 | 93.0 | 7.60 |
| 225SH/4 | 50 | 37 | 1782 | - | 59 | 810 | J | 1758 | 3.0 | 3.4 | 0.84 | 94.1 | 9.5 |
| 225MH/4 | 60 | 45 | 1782 | - | 70 | 820 | J | 2109 | 3.0 | 3.5 | 0.85 | 94.3 | 11.6 |
| 250MH/4 | 75 | 55 | 1790 | - | 86 | 820 | J | 2619 | 2.9 | 3.4 | 0.86 | 95.1 | 20.4 |
| 280SH/4 | 100 | 75 | 1786 | - | 116 | 830 | J | 3506 | 2.9 | 3.5 | 0.85 | 94.5 | 36.3 |
| 280MH/4 | 125 | 90 | 1786 | - | 146 | 800 | J | 4385 | 2.8 | 3.3 | 0.85 | 94.9 | 43.4 |
| 315SH/4 | 150 | 110 | 1791 | - | 174 | 760 | H | 5246 | 2.8 | 3.1 | 0.85 | 95.5 | 58.8 |
| 315MaH/4 | 200 | 150 | 1791 | - | 225 | 890 | J | 6995 | 3.3 | 3.5 | 0.86 | 95.9 | 86.9 |

a) Motors frame 225 and larger are standardly provided as single-voltage 460V and not as dual voltage

**Pn** - **Full load power**
**Nn** - **Full load speed**
**In** - **Full load current**
**Ia** - **Locked-rotor current**
**Ia/In** - **Locked-rotor current ratio (%)**
**Tn** - **Full-load torque**
**Ta** - **Locked-rotor torque**
**Ta/Tn** - **Locked-rotor torque ratio**
**Tk** - **Break-down torque**
**Tk/Tn** - **Break-down torque ratio**
**pf** - **Power factor**
**Eff** - **Normal efficiency**
**Jm** - **Motor inertia**

MOTORS


Send Quote Requests to info@automatedpt.com
Call +1(800)985-6929 To Order or Order Online At Nordgearmotors.com

Send Quote Requests to info@automatedpt.com Call +1(800)985-6929 To Order or Order Online At Nordgearmotors.com

# Performance Data



NORD DRIVESYSTEMS

## Standard Efficiency

**575V – 60Hz**

Inverter duty • TEFC
Synchronous speed 1800rpm @ 60Hz • 4-pole • Three-phase
Voltages: 332/575V – 60Hz • 1.15 Service Factor
Continuous Duty • 40°C Ambient • up to 3300ft Elevation
Class B temperature rise • Class F insulation

| Motor Type | Power Pn | | Nn Full-load | In Full-Load Current 575V | Ia/In | Code Letter | Torque Tn | Ta/Tn | Tk/Tn | pf | Eff. | Jm Inertia |
|---|---|---|---|---|---|---|---|---|---|---|---|---|
| | [hp] | [kW] | [rpm] | [A] | [%] | | [lb-in] | | | | [%] | [lb-ft²] |
| 63S/4 | 0.16 | 0.12 | 1700 | 0.37 | 245 | F | 5.92 | 2.1 | 2.2 | 0.66 | 52 | 0.005 |
| 63L/4 | 0.25 | 0.18 | 1680 | 0.46 | 275 | E | 8.99 | 2.1 | 2.2 | 0.71 | 57 | 0.0067 |
| 71S/4 | 0.33 | 0.25 | 1710 | 0.66 | 310 | G | 12.3 | 2.5 | 2.4 | 0.64 | 63 | 0.017 |
| 71L/4 | 0.5 | 0.37 | 1720 | 0.8 | 355 | F | 18.0 | 2.45 | 2.6 | 0.69 | 71 | 0.0204 |
| 80S/4 | 0.75 | 0.55 | 1710 | 1.12 | 355 | F | 27.0 | 2.2 | 2.2 | 0.71 | 72 | 0.0259 |
| 80L/4 | 1 | 0.75 | 1650 | 1.46 | 390 | G | 38.1 | 2.2 | 2.3 | 0.74 | 70 | 0.0345 |
| 90S/4 | 1.5 | 1.1 | 1660 | 1.94 | 445 | G | 55.6 | 2.7 | 2.6 | 0.78 | 73 | 0.055 |
| 90L/4 | 2 | 1.5 | 1660 | 2.54 | 465 | G | 75.8 | 2.55 | 2.5 | 0.80 | 74 | 0.074 |
| 100L/4 | 3 | 2.2 | 1705 | 3.6 | 490 | G | 108 | 2.3 | 2.6 | 0.81 | 82 | 0.107 |
| 100LA/4 | 5 | 3.7 | 1725 | 6.1 | 510 | G | 180 | 2.7 | 3.1 | 0.75 | 81 | 0.141 |
| 132S/4 | 7.5 | 5.5 | 1735 | 7.92 | 545 | G | 267 | 2.45 | 2.75 | 0.82 | 86 | 0.55 |
| 132M/4 | 10 | 7.5 | 1735 | 10.3 | 645 | H | 363 | 2.9 | 3.2 | 0.84 | 87 | 0.752 |
| 160M/4 | 15 | 11 | 1770 | 14.7 | 665 | H | 522 | 2.45 | 3.0 | 0.82 | 88 | 0.95 |
| 160L/4 | 20 | 15 | 1765 | 19.5 | 725 | H | 713 | 2.9 | 3.3 | 0.86 | 89.4 | 1.23 |
| 180MX/4 | 25 | 18.5 | 1750 | 24.0 | 860 | K | 887 | 2.95 | 3.4 | 0.87 | 89 | 1.35 |
| 180LX/4 | 30 | 22 | 1755 | 28.4 | 980 | L | 1052 | 3.4 | 3.7 | 0.87 | 89.4 | 1.35 |
| 200L/4 | 40 | 30 | 1780 | 36.0 | 770 | J | 1414 | 2.9 | 3.6 | 0.85 | 92 | 5.70 |
| 225S/4 | 50 | 37 | 1765 | 50.0 | 760 | H | 1759 | 3.1 | 3.5 | 0.86 | 93.1 | 7.60 |
| 225M/4 | 60 | 45 | 1770 | | 840 | J | 2133 | 3.1 | 3.6 | 0.86 | 93.8 | 8.54 |
| 250M/4 | 75 | 55 | 1782 | | 700 | H | 2636 | 2.8 | 3.2 | 0.84 | 93.7 | 16.4 |
| 280S/4 | 100 | 75 | 1788 | | 830 | J | 3497 | 2.9 | 3.5 | 0.84 | 94.4 | 30.6 |
| 280M/4 | 125 | 90 | 1786 | | 810 | J | 4385 | 2.8 | 3.3 | 0.86 | 95.1 | 34.9 |
| 315S/4 | 150 | 110 | 1788 | | 720 | H | 5255 | 2.8 | 3.1 | 0.84 | 94.7 | 47.5 |
| 315M/4 | 175 | 132 | 1790 | | 800 | J | 6125 | 3.0 | 3.4 | 0.85 | 95.4 | 58.4 |
| 315Ma/4 | 200 | 150 | 1790 | | 810 | J | 7003 | 3.2 | 3.6 | 0.86 | 95.7 | 71.4 |
| 315L/4 | 250 | 187 | 1790 | | 850 | J | 8734 | 3.2 | 3.3 | 0.87 | 96.3 | 92.8 |

**Pn** - Full load power
**Nn** - Full load speed
**In** - Full load current
**Ia** - Locked-rotor current
**Ia/In** - Locked-rotor current ratio (%)
**Tn** - Full-load torque
**Ta** - Locked-rotor torque
**Ta/Tn** - Locked-rotor torque ratio
**Tk** - Break-down torque
**Tk/Tn** - Break-down torque ratio
**pf** - Power factor
**Eff** - Normal efficiency
**Jm** - Motor inertia

MOTORS


Send Quote Requests to info@automatedpt.com
Call +1(800)985-6929 To Order or Order Online At Nordgearmotors.com

DRIVESYSTEMS



# Performance Data

## Energy Efficient (EPAct)

## 575V – 60Hz / EE

Inverter duty • TEFC
Synchronous speed 1800rpm @ 60Hz • 4-pole • Three-phase
Voltages: 332/575V – 60Hz • 1.15 Service Factor
Continuous Duty • 40°C Ambient • up to 3300ft Elevation
Class B temperature rise • Class F insulation

| Motor Type | Power Pn | | Nn Full-load | In Full-Load Current 575V | Ia/In | Code Letter | Torque Tn | Ta/Tn | Tk/Tn | pf | Eff. | Jm Inertia |
|---|---|---|---|---|---|---|---|---|---|---|---|---|
| | [hp] | [kW] | [rpm] | [A] | [%] | | [lb-in] | | | | [%] | [lb-ft²] |
| **80LH/4** | 1 | 0.75 | 1750 | 1.5 | 600 | L | 36.0 | 4.6 | 4.3 | 0.59 | 82.5 | 0.051 |
| **90SH/4** | 1.5 | 1.1 | 1740 | 1.75 | 630 | J | 53.1 | 3.5 | 3.8 | 0.76 | 84.0 | 0.085 |
| **90LH/4** | 2 | 1.5 | 1745 | 2.45 | 670 | K | 72.1 | 4.3 | 4.5 | 0.71 | 84.0 | 0.092 |
| **100LH/4** | 3 | 2.2 | 1765 | 3.4 | 790 | L | 105 | 3.6 | 4.7 | 0.73 | 87.5 | 0.178 |
| **112MH/4** | 5 | 3.7 | 1770 | 5.6 | 810 | L | 176 | 4.0 | 4.8 | 0.76 | 87.5 | 0.304 |
| **132SH/4** | 7.5 | 5.5 | 1780 | 8.3 | 820 | L | 259 | 4.3 | 4.6 | 0.74 | 89.5 | 0.75 |
| **132MH/4** | 10 | 7.5 | 1770 | 10.8 | 735 | J | 356 | 3.2 | 4.0 | 0.78 | 89.5 | 0.84 |
| **160MH/4** | 15 | 11 | 1765 | 14.3 | 810 | J | 527 | 2.6 | 3.2 | 0.85 | 91.0 | 1.23 |
| **160LH/4** | 20 | 15 | 1765 | 19.6 | 850 | K | 712 | 2.8 | 3.5 | 0.85 | 91.0 | 1.35 |
| **180MH/4** | 25 | 18.5 | 1770 | 24.4 | 840 | K | 879 | 2.8 | 3.6 | 0.83 | 92.4 | 3.56 |
| **180LH/4** | 30 | 22 | 1770 | 28.8 | 880 | K | 1046 | 3.1 | 3.9 | 0.83 | 92.4 | 4.51 |
| **200LH/4** | 40 | 30 | 1770 | 37.6 | 830 | J | 1424 | 3.0 | 3.6 | 0.86 | 93.0 | 7.60 |
| **225SH/4** | 50 | 37 | 1782 | 47.2 | 810 | J | 1758 | 3.0 | 3.4 | 0.84 | 94.1 | 9.5 |
| **225MH/4** | 60 | 45 | 1782 | 56 | 820 | J | 2109 | 3.0 | 3.5 | 0.85 | 94.3 | 11.6 |
| **250MH/4** | 75 | 55 | 1790 | 69 | 820 | J | 2619 | 2.9 | 3.4 | 0.86 | 95.1 | 20.4 |
| **280SH/4** | 100 | 75 | 1786 | 93 | 830 | J | 3506 | 2.9 | 3.5 | 0.85 | 94.5 | 36.3 |
| **280MH/4** | 125 | 90 | 1786 | 117 | 800 | J | 4385 | 2.8 | 3.3 | 0.85 | 94.9 | 43.4 |
| **315SH/4** | 150 | 110 | 1791 | 139 | 760 | H | 5246 | 2.8 | 3.1 | 0.85 | 95.5 | 58.8 |
| **315MaH/4** | 200 | 150 | 1791 | 180 | 890 | J | 6995 | 3.3 | 3.5 | 0.86 | 95.9 | 86.9 |

**Pn** - **Full load power**
**Nn** - **Full load speed**
**In** - **Full load current**
**Ia** - **Locked-rotor current**
**Ia/In** - **Locked-rotor current ratio (%)**
**Tn** - **Full-load torque**
**Ta** - **Locked-rotor torque**
**Ta/Tn** - **Locked-rotor torque ratio**
**Tk** - **Break-down torque**
**Tk/Tn** - **Break-down torque ratio**
**pf** - **Power factor**
**Eff** - **Normal efficiency**
**Jm** - **Motor inertia**

MOTORS


Send Quote Requests to info@automatedpt.com
Call +1(800)985-6929 To Order or Order Online At Nordgearmotors.com

Send Quote Requests to info@automatedpt.com Call +1(800)985-6929 To Order or Order Online At Nordgearmotors.com

# Performance Data



DRIVESYSTEMS

## Standard Efficiency

## 200-208V – 60Hz

Inverter duty • Induction motor • TEFC
Synchronous speed 1800rpm @ 60Hz • 4-pole • Three-phase
Voltages: 208V – 60Hz • 1.15 Service Factor
Continuous Duty • 40°C Ambient • up to 3300ft Elevation
Class B temperature rise • Class F insulation

| Motor Type | Power Pn | | Nn Full-load | In 208V | Ia/In | Code Letter | Torque Tn | Ta/Tn | Tk/Tn | pf | Eff. | Jm Inertia |
|---|---|---|---|---|---|---|---|---|---|---|---|---|
| | [hp] | [kW] | [rpm] | [A] | [%] | | [lb-in] | | | | [%] | [lb-ft²] |
| **63S/4** | 0.16 | 0.12 | 1700 | 0.97 | 245 | F | 5.93 | 2.1 | 2.2 | 0.66 | 52 | 0.005 |
| **63L/4** | 0.25 | 0.18 | 1680 | 1.24 | 275 | E | 9.38 | 2.1 | 2.2 | 0.71 | 57 | 0.0067 |
| **71S/4** | 0.33 | 0.25 | 1710 | 1.73 | 310 | G | 12.2 | 2.5 | 2.4 | 0.64 | 63 | 0.015 |
| **71L/4** | 0.5 | 0.37 | 1720 | 2.10 | 355 | F | 18.3 | 2.45 | 2.6 | 0.69 | 71 | 0.0181 |
| **80S/4** | 0.75 | 0.55 | 1710 | 2.99 | 355 | F | 27.6 | 2.2 | 2.2 | 0.71 | 72 | 0.0304 |
| **80L/4** | 1 | 0.75 | 1650 | 4.05 | 390 | G | 38.2 | 2.2 | 2.3 | 0.74 | 70 | 0.0392 |
| **90S/4** | 1.5 | 1.1 | 1660 | 5.35 | 445 | G | 57.0 | 2.7 | 2.6 | 0.78 | 73 | 0.0670 |
| **90L/4** | 2 | 1.5 | 1660 | 7.01 | 465 | G | 75.9 | 2.55 | 2.5 | 0.80 | 74 | 0.0855 |
| **100L/4** | 3 | 2.2 | 1705 | 9.95 | 490 | G | 111 | 2.3 | 2.6 | 0.81 | 82 | 0.107 |
| **100LA/4** | 5 | 3.7 | 1725 | 16.8 | 510 | G | 183 | 2.7 | 3.1 | 0.75 | 81 | 0.162 |
| **132S/4** | 7.5 | 5.5 | 1735 | 21.9 | 545 | G | 272 | 2.45 | 2.75 | 0.82 | 86 | 0.553 |
| **132M/4** | 10 | 7.5 | 1735 | 28.5 | 645 | H | 363 | 2.9 | 3.2 | 0.84 | 87 | 0.753 |

**Pn** - Full load power
**Nn** - Full load speed
**In** - Full load current
**Ia** - Locked-rotor current
**Ia/In** - Locked-rotor current ratio (%)
**Tn** - Full-load torque
**Ta** - Locked-rotor torque
**Ta/Tn** - Locked-rotor torque ratio
**Tk** - Break-down torque
**Tk/Tn** - Break-down torque ratio
**pf** - Power factor
**Eff** - Normal efficiency
**Jm** - Motor inertia

MOTORS


Send Quote Requests to info@automatedpt.com
Call +1(800)985-6929 To Order or Order Online At Nordgearmotors.com



# Performance Data

## Standard Efficiency (EFF2)

## 400V – 50Hz

Inverter duty • TEFC
Synchronous speed 1500rpm @ 50Hz • 4-pole • Three-phase
Voltages: 400V (380-420) – 50Hz • 1.0 Service Factor
Continuous Duty • 40°C Ambient • up to 3300ft Elevation
Class B temperature rise • Class F insulation

| Motor Type | Power Pn | | Nn Full-load | In Full-Load Current 380-420V[a)] | Ia/In | Code Letter | Torque Tn | Ta/Tn | Tk/Tn | pf | Eff Full load | Eff 75% load | Eff Class | Jm Inertia |
|---|---|---|---|---|---|---|---|---|---|---|---|---|---|---|
| | [hp] | [kW] | [rpm] | [A] | [%] | | [lb-in] | | | | [%] | [%] | | [lb-ft2] |
| **63S/4** | 0.16 | 0.12 | 1335 | 0.46 | 245 | E | 7.55 | 1.8 | 1.9 | 0.76 | 50.0 | b) | b) | 0.005 |
| **63L/4** | 0.25 | 0.18 | 1325 | 0.62 | 260 | D | 11.4 | 1.8 | 1.9 | 0.80 | 56.5 | b) | b) | 0.0066 |
| **71S/4** | 0.33 | 0.25 | 1380 | 0.76 | 330 | F | 15.2 | 2.2 | 2.1 | 0.77 | 61.3 | b) | b) | 0.015 |
| **71L/4** | 0.5 | 0.37 | 1360 | 1.1 | 320 | E | 22.8 | 2.1 | 2.3 | 0.75 | 62.7 | b) | b) | 0.018 |
| **80S/4** | 0.75 | 0.55 | 1375 | 1.52 | 330 | E | 33.6 | 1.9 | 2.0 | 0.73 | 71.5 | b) | b) | 0.03 |
| **80L/4** | 1 | 0.75 | 1375 | 2.1 | 350 | F | 45.8 | 2.0 | 2.1 | 0.74 | 69.7 | b) | b) | 0.039 |
| **90S/4** | 1.5 | 1.1 | 1445 | 2.98 | 500 | H | 63.9 | 3.2 | 3.4 | 0.69 | 77.4 | 79.0 | EFF2 | 0.067 |
| **90L/4** | 2 | 1.5 | 1440 | 3.73 | 540 | H | 87.5 | 3.1 | 3.6 | 0.73 | 79.3 | 80.0 | EFF2 | 0.085 |
| **100L/4** | 3 | 2.2 | 1440 | 5.22 | 510 | G | 128 | 2.3 | 3.0 | 0.74 | 81.1 | 81.1 | EFF2 | 0.107 |
| **100LA/4** | 4 | 3 | 1460 | 7.2 | 540 | H | 172 | 2.7 | 3.3 | 0.73 | 82.7 | 83.4 | EFF2 | 0.16 |
| **112M/4** | 5.4 | 4 | 1445 | 8.3 | 530 | G | 232 | 2.3 | 2.8 | 0.80 | 86.0 | 84.0 | EFF2 | 0.28 |
| **132S/4** | 7.5 | 5.5 | 1445 | 11.4 | 540 | G | 319 | 2.1 | 2.7 | 0.81 | 85.8 | 89.0 | EFF2 | 0.55 |
| **132M/4** | 10 | 7.5 | 1445 | 14.8 | 550 | G | 436 | 2.5 | 2.8 | 0.84 | 87.0 | 86.0 | EFF2 | 0.75 |
| **160M/4** | 15 | 11 | 1460 | 21.5 | 620 | G | 633 | 2.2 | 2.7 | 0.84 | 88.5 | 89.0 | EFF2 | 0.95 |
| **160L/4** | 20 | 15 | 1460 | 28.5 | 650 | H | 861 | 2.6 | 3.0 | 0.84 | 90.0 | 90.2 | EFF2 | 1.23 |
| **180MX/4** | 25 | 18.5 | 1460 | 35 | 770 | J | 1063 | 2.7 | 3.1 | 0.86 | 90.0 | 90.0 | EFF2 | 1.35 |
| **180LX/4** | 30 | 22 | 1455 | 44 | 830 | K | 1265 | 3.1 | 3.4 | 0.82 | 90.5 | 90.5 | EFF2 | 1.35 |
| **200L/4** | 40 | 30 | 1465 | 55 | 700 | H | 1722 | 2.6 | 3.2 | 0.86 | 91.8 | 91.8 | EFF2 | 5.70 |
| **225S/4** | 50 | 37 | 1470 | 66 | 700 | H | 2118 | 2.8 | 3.2 | 0.87 | 92.9 | 92.9 | EFF2 | 7.60 |
| **225M/4** | 60 | 45 | 1470 | 80 | 770 | J | 2575 | 2.8 | 3.3 | 0.87 | 93.4 | 93.4 | EFF2 | 8.55 |
| **250M/4** | 75 | 55 | 1480 | 100 | 630 | G | 3120 | 2.5 | 2.8 | 0.85 | 93.3 | 93.6 | EFF2 | 16.4 |
| **280S/4** | 100 | 75 | 1485 | 136 | 740 | H | 4235 | 2.5 | 3.0 | 0.85 | 94.2 | 94.0 | EFF2 | 30.6 |
| **280M/4** | 125 | 90 | 1485 | 160 | 740 | H | 5088 | 2.5 | 3.0 | 0.86 | 94.6 | 94.6 | EFF2 | 34.9 |
| **315 S/4** | 150 | 110 | 1486 | 200 | 650 | G | 6212 | 2.6 | 2.8 | 0.84 | 94.5 | 94.4 | b) | 47.5 |
| **315 M/4** | 180 | 132 | 1486 | 235 | 690 | G | 7451 | 2.8 | 3.1 | 0.85 | 94.8 | 94.7 | b) | 58.4 |
| **315 Ma/4** | 220 | 160 | 1486 | 280 | 690 | G | 9033 | 2.8 | 2.7 | 0.86 | 95.4 | 95.4 | b) | 71.4 |
| **315L/4** | 270 | 200 | 1486 | 345 | 700 | G | 11291 | 2.8 | 2.7 | 0.88 | 95.7 | 95.8 | b) | 92.8 |

a) Motors 10 hp(7.5 kW) and below are rated 230 /400Y – volts, motors above 10 hp(7.5 kW) are rated 400 /690Y-volts
b) EFF classes levels not applicable – motor outside the power range covered by the aggreement

**Pn** - **Full load power**
**Nn** - **Full load speed**
**In** - **Full load current**
**Ia** - **Locked-rotor current**
**Ia/In** - **Locked-rotor current ratio (%)**
**Tn** - **Full-load torque**
**Ta** - **Locked-rotor torque**
**Ta/Tn** - **Locked-rotor torque ratio**
**Tk** - **Break-down torque**
**Tk/Tn** - **Break-down torque ratio**
**pf** - **Power factor**
**Eff** - **Normal efficiency**
**Jm** - **Motor inertia**




Send Quote Requests to info@automatedpt.com
Call +1(800)985-6929 To Order or Order Online At Nordgearmotors.com

# Performance Data



DRIVESYSTEMS

**Energy Efficient** (EFF1)

## 400V – 50Hz / EE

Inverter duty • TEFC
Synchronous speed 1500rpm @ 50Hz • 4-pole • Three-phase
Voltages: 400V (380-420) – 50Hz • 1.0 Service Factor
Continuous Duty • 40°C Ambient • up to 3300ft Elevation
Class B temperature rise • Class F insulation

EFF I CE

| Motor Type | Power Pn | | Nn Full-load | In Full-Load Current 400V * a) (380-420V) | Ia/In | Code Letter | Torque Tn | Ta/Tn | Tk/Tn | pf | Eff Full load | Eff 75% load | Eff Class | Jm Inertia |
|---|---|---|---|---|---|---|---|---|---|---|---|---|---|---|
| | [hp] | [kW] | [rpm] | [A] | [%] | | [lb-in] | | | | [%] | [%] | | [lb-ft2] |
| **90SH/4** | 1.5 | 1.1 | 1430 | 2.51 | 520 | G | 64.6 | 2.8 | 3.1 | 0.75 | 84.0 | 85.1 | EFF1 | 0.082 |
| **90LH/4** | 2 | 1.5 | 1435 | 3.59 | 560 | H | 87.7 | 3.6 | 3.7 | 0.71 | 85.0 | 85.3 | EFF1 | 0.093 |
| **100LH/4** | 3 | 2.2 | 1465 | 4.88 | 685 | J | 126 | 3.3 | 4.0 | 0.74 | 87.5 | 87.9 | EFF1 | 0.17 |
| **112SH/4** | 4 | 3 | 1460 | 6.7 | 715 | K | 172 | 3.25 | 4.2 | 0.72 | 87.4 | 90.0 | EFF1 | 0.28 |
| **112MH/4** | 5.4 | 4 | 1455 | 8.9 | 685 | J | 224 | 3.4 | 4.1 | 0.74 | 88.3 | 90.2 | EFF1 | 0.30 |
| **132SH/4** | 7.5 | 5.5 | 1470 | 12 | 750 | K | 314 | 3.8 | 4.15 | 0.73 | 90.1 | 90.5 | EFF1 | 0.75 |
| **132MH/4** | 10 | 7.5 | 1470 | 15.5 | 665 | J | 428 | 2.9 | 3.5 | 0.77 | 90.8 | 91.0 | EFF1 | 0.84 |
| **160MH/4** | 15 | 11 | 1460 | 20.5 | 690 | H | 632 | 2.7 | 3.2 | 0.85 | 91.5 | 92.0 | EFF1 | 1.23 |
| **160LH/4** | 20 | 15 | 1460 | 27.5 | 700 | H | 861 | 2.9 | 3.3 | 0.86 | 92.0 | 92.3 | EFF1 | 1.35 |
| **180MH/4** | 25 | 18.5 | 1465 | 34.5 | 700 | H | 1063 | 2.5 | 3.2 | 0.84 | 92.5 | 93.0 | EFF1 | 3.56 |
| **180LH/4** | 30 | 22 | 1465 | 40.5 | 730 | H | 1266 | 2.6 | 3.4 | 0.84 | 93.0 | 93.4 | EFF1 | 4.51 |
| **200LH/4** | 40 | 30 | 1465 | 53 | 700 | H | 1722 | 2.6 | 3.2 | 0.87 | 93.5 | 94.0 | EFF1 | 7.60 |
| **225SH/4** | 50 | 37 | 1480 | 67 | 720 | H | 2100 | 2.6 | 3.0 | 0.85 | 94.0 | 94.4 | EFF1 | 9.5 |
| **225MH/4** | 60 | 45 | 1480 | 80 | 720 | H | 2548 | 2.6 | 3.0 | 0.86 | 94.5 | 94.7 | EFF1 | 11.6 |
| **250MH/4** | 75 | 55 | 1485 | 96 | 740 | H | 3110 | 2.6 | 3.0 | 0.87 | 95.0 | 95.2 | EFF1 | 20.4 |
| **280SH/4** | 100 | 75 | 1485 | 132 | 730 | H | 4235 | 2.5 | 3.0 | 0.86 | 95.2 | 95.3 | EFF1 | 36.3 |
| **280MH/4** | 125 | 90 | 1485 | 158 | 740 | H | 5088 | 2.5 | 3.0 | 0.86 | 95.6 | 95.6 | EFF1 | 43.4 |

a) Motors 10 hp(7.5 kW) and below are rated 230 /400Y – volts, motors above 10 hp(7.5 kW) are rated 400 /690Y-volts

**Pn** - **Full load power**
**Nn** - **Full load speed**
**In** - **Full load current**
**Ia** - **Locked-rotor current**
**Ia/In** - **Locked-rotor current ratio (%)**
**Tn** - **Full-load torque**
**Ta** - **Locked-rotor torque**
**Ta/Tn** - **Locked-rotor torque ratio**
**Tk** - **Break-down torque**
**Tk/Tn** - **Break-down torque ratio**
**pf** - **Power factor**
**Eff** - **Normal efficiency**
**Jm** - **Motor inertia**




Send Quote Requests to info@automatedpt.com
Call +1(800)985-6929 To Order or Order Online At Nordgearmotors.com

NORD DRIVESYSTEMS



# Connection Diagrams

Frames 63-132
230 / 460V, 60Hz, 3Ø | 200 / 400V, 50Hz, 3Ø
190 / 380V, 60Hz, 3Ø

120094410

WIRING DIAGRAM
3 PHASE MOTOR

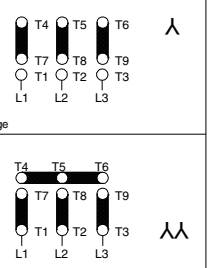


Frames 160 +
230 / 460V, 60Hz, 3Ø | 200 / 400V, 50Hz, 3Ø
190 / 380V, 60Hz, 3Ø

120095260

WIRING DIAGRAM
3 PHASE MOTOR

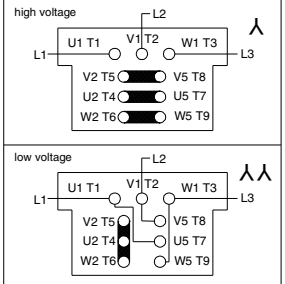


Frames 160 +
230 / 460V, 60Hz, 3Ø | 200 / 400V, 50Hz, 3Ø
190 / 380V, 60Hz, 3Ø

120095500 REV 1

WIRING DIAGRAM
3 PHASE MOTOR

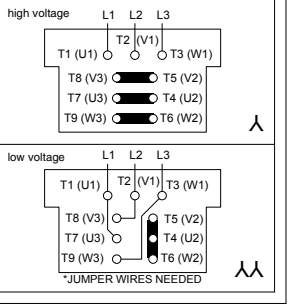


460 / 800V, 60Hz, 3Ø | 230 / 400V, 50Hz, 3Ø
208 / 360V, 60Hz, 3Ø | 400 / 690V, 50Hz, 3Ø
332 / 575V, 60Hz, 3Ø

120095270

WIRING DIAGRAM
3 PHASE MOTOR

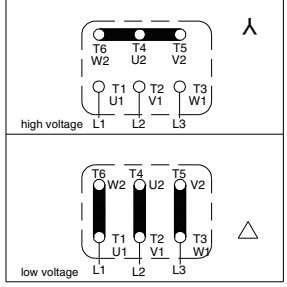


120094440

STANDARD BRAKE RECTIFIER

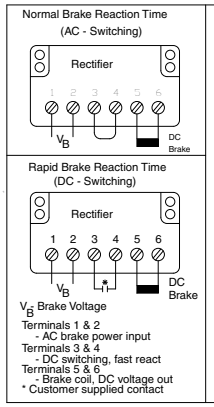


120094450

GPU BRAKE RECTIFIER

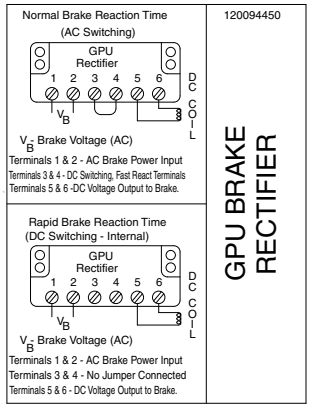


120094460

GPE BRAKE RECTIFIER

Use with P/N's 19140230 & 19140240

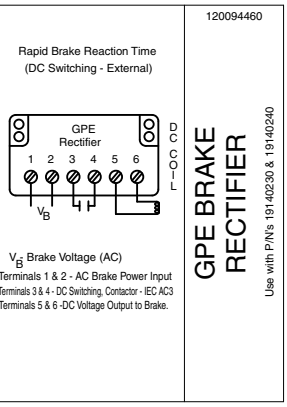


2 - SPEED MOTORS
SINGLE WINDING (4-2 & 8-4 POLE)

120094400

2 - SPEED MOTORS SINGLE WINDING

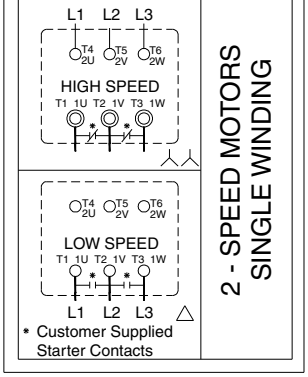


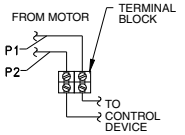


* MAX. OPERATING VOLTAGE 2.5V.
* SWITCH TEMP. 155°C
* RESPONSE TIME < 5 SECONDS

THERMISTOR
"TF" OPTION

120095240

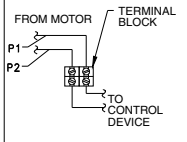


* NC (NORMALLY CLOSED) CONTACTS RATED 1.6A AT 2.50 VAC
* 6-500 VAC WORKING RANGE
* AUTOMATIC RESET AT 30 ± 15°C TEMP. DROP

THERMISTATS
"TW" OPTION

120095230

2 - SPEED MOTORS
DUAL WINDING (8-2 POLE)

120095310

2 - SPEED MOTORS DUAL WINDING

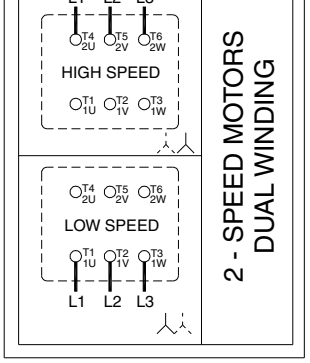


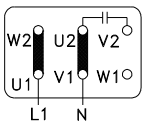


1 PHASE
115V*
50/60 Hz

* CAPACITOR IS SUPPLIED

BLOWER COOLING FAN
"FC" OPTION

120095450

OPTION "F" 1 PH

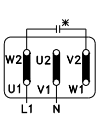


230V
50 / 60 Hz

OPTION "F" 3 PH

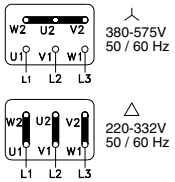


380-575V
50 / 60 Hz

220-332V
50 / 60 Hz

* CAPACITOR IS SUPPLIED

BLOWER COOLING FAN
"F" OPTION

120095250

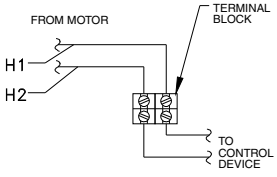


SPACE HEATER
"SH" OPTION

120095220

MOTORS


Send Quote Requests to info@automatedpt.com
Call +1(800)985-6929 To Order or Order Online At Nordgearmotors.com

# Dimensions
# Motor Options



DRIVESYSTEMS

**Standard Motor**

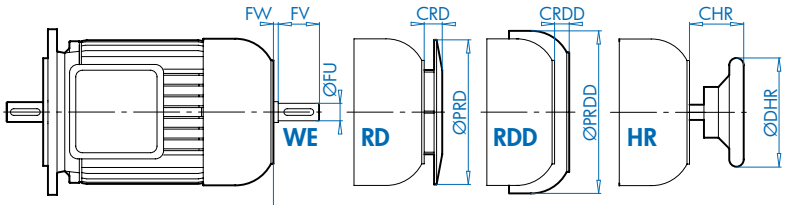


**Option IG**

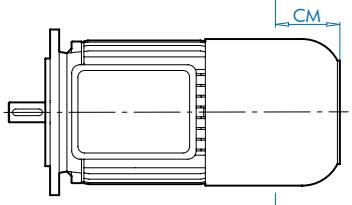


**Option F**

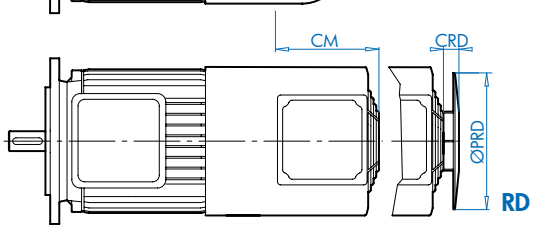


**Option IG F**

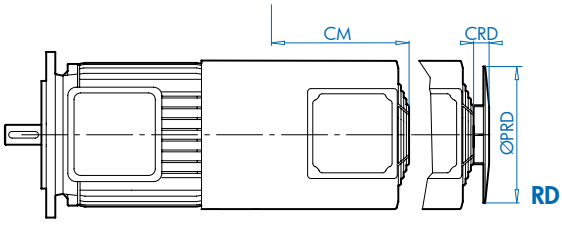


| Motor Type | WE | | | RD | | RDD | | HR | | IG | F | IG F | RD/IG/IGF | |
|---|---|---|---|---|---|---|---|---|---|---|---|---|---|---|
| | FU | FV | FW | PRD | CRD | PRDD | CRDD | DHR | CHR | CM | CM | CM | PRD | CRD |
| | [mm] | | | [in] | | | | | | | | | | |
| 63S/L | 11 | 23 | 0 | 4.84 | 0.47 | 6.02 | 1.06 | 3.94 | 1.54 | 2.20 | 3.46 | 6.22 | 5.24 | 1.46 |
| 71S/L | 11 | 23 | 1 | 5.43 | 0.47 | 6.65 | 0.94 | 3.94 | 1.57 | 2.20 | 3.50 | 5.67 | 5.91 | 1.46 |
| 80S/L | 14 | 30 | 3 | 6.14 | 0.63 | 7.20 | 1.22 | 3.94 | 1.93 | 2.40 | 3.54 | 5.51 | 6.69 | 1.57 |
| 90S/L | 19 | 40 | 7 | 6.93 | 0.63 | 7.91 | 1.22 | 6.30 | 2.64 | 2.83 | 4.09 | 5.87 | 7.40 | 1.18 |
| 100L | 24 | 50 | 6 | 7.64 | 0.63 | 8.86 | 1.10 | 6.30 | 2.95 | 2.71 | 3.74 | 6.10 | 8.27 | 1.10 |
| 112M | 24 | 50 | 4 | 8.58 | 0.63 | 10.43 | 1.50 | 6.30 | 2.91 | 2.67 | 3.90 | 5.87 | 9.80 | 1.30 |
| 132S/M | 32 | 80 | 18 | 10.12 | 0.71 | 12.51 | 1.61 | 7.87 | 4.57 | 2.48 | 4.53 | 6.10 | 11.81 | 0.98 |
| 160M/L | 42 | 110 | 23 | 9.84 | 2.09 | 14.45 | 1.77 | 9.84 | 4.72 | 2.95 | 6.50 | 6.93 | 13.31 | 1.26 |
| 180MX/LX | 42 | 110 | * | 13.39 | 3.15 | 15.87 | 2.76 | * | * | 4.13 | 5.87 | 7.83 | 13.31 | 1.26 |
| 200L | 55 | 110 | 17 | 13.39 | 3.15 | 17.72 | 3.23 | - | - | 8.15 | 6.14 | 8.14 | 13.31 | 1.26 |
| 225S | 55 | 110 | 17 | 13.39 | 3.15 | 17.72 | 3.23 | - | - | 8.15 | 6.14 | 8.14 | 13.31 | 1.26 |
| 225M | 55 | 110 | 17 | 13.39 | 3.15 | 17.72 | 3.23 | - | - | 8.15 | 6.14 | 8.14 | 13.31 | 1.26 |
| 250M | 60 | 140 | 15 | 18.50 | 3.94 | 22.44 | 3.23 | - | - | * | 5.31 | * | * | * |
| 280S | 65 | 140 | 15 | 20.67 | 4.33 | 24.61 | 3.23 | - | - | * | 6.30 | * | * | * |
| 280M | 65 | 140 | 15 | 20.67 | 4.33 | 24.61 | 3.23 | - | - | * | 6.30 | * | * | * |
| 315S | 70 | 140 | 5 | 23.23 | 4.33 | 27.56 | 3.23 | - | - | * | 6.30 | * | * | * |
| 315M | 70 | 140 | 5 | 23.23 | 4.33 | 27.56 | 3.23 | - | - | * | 6.30 | * | * | * |
| 315L | 70 | 140 | 5 | 23.23 | 4.33 | 27.56 | 3.23 | - | - | * | 6.30 | * | * | * |

* **Consult Factory**


Send Quote Requests to info@automatedpt.com
Call +1(800)985-6929 To Order or Order Online At Nordgearmotors.com



# Dimensions
# Brakemotor Options

**Standard**
**BRE**

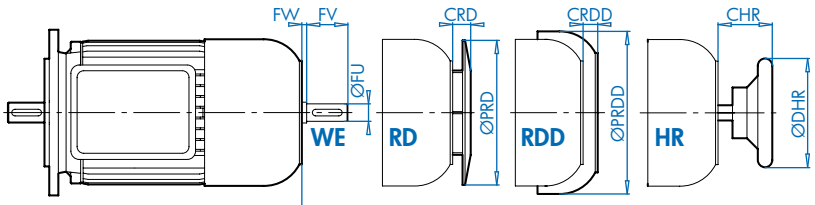


**Option**
**BRE IG**

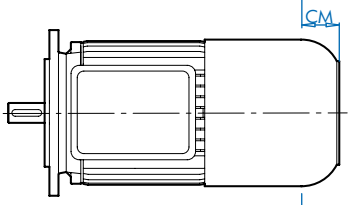


**Option**
**BRE F**

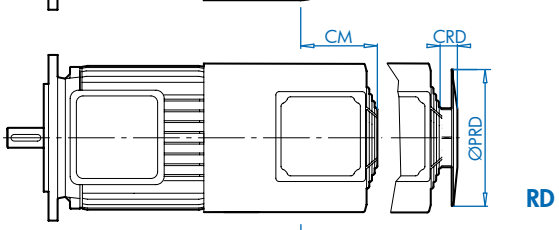


**Option IG F**
**BRE IG F**

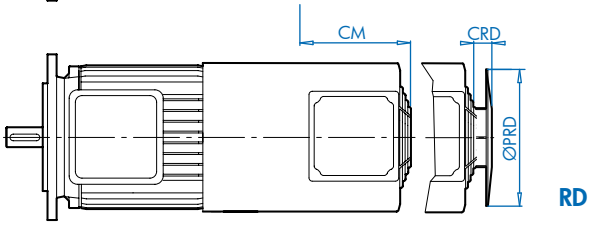


| Motor Type | WE | | | RD | | RDD | | HR | | IG | F | IG F | RD/IG/IGF | |
|---|---|---|---|---|---|---|---|---|---|---|---|---|---|---|
| | FU | FV | FW | PRD | CRD | PRDD | CRDD | DHR | CHR | CM | CM | CM | PRD | CRD |
| | [mm] | | | [in] | | | | | | | | | | |
| 63S/L | 11 | 23 | 3.5 | 4.84 | 0.47 | 6.02 | 1.02 | 3.94 | 1.69 | 2.44 | 3.54 | 4.92 | 5.24 | 1.46 |
| 71S/L | 11 | 23 | 3.5 | 5.43 | 0.47 | 6.65 | 0.94 | 3.94 | 1.69 | 2.91 | 3.70 | 5.47 | 5.91 | 1.46 |
| 80S/L | 14 | 30 | 4 | 6.14 | 0.63 | 7.20 | 1.22 | 3.94 | 1.97 | 2.20 | 3.50 | 5.47 | 6.69 | 1.57 |
| 90S/L | 19 | 40 | 8 | 6.93 | 0.63 | 7.91 | 1.22 | 6.30 | 2.68 | 2.76 | 3.94 | 5.71 | 7.40 | 1.18 |
| 100L | 24 | 50 | 10 | 7.64 | 0.63 | 8.86 | 0.87 | 6.30 | 3.07 | 2.80 | 4.13 | 5.52 | 8.27 | 1.10 |
| 112M | 24 | 50 | 7 | 8.58 | 0.63 | 10.43 | 1.50 | 6.30 | 3.03 | 2.52 | 4.13 | 5.52 | 9.80 | 1.30 |
| 132S/M | 32 | 80 | 10 | 10.12 | 0.71 | 12.60 | 1.61 | 7.87 | 4.25 | 2.56 | 4.92 | 6.10 | 11.81 | 0.98 |
| 160M/L | 42 | 110 | 19 | 12.20 | 0.75 | 14.45 | 1.77 | 9.84 | 4.57 | 1.54 | 5.12 | 6.50 | 13.31 | 1.26 |
| 180MX/LX | 42 | 110 | * | 13.70 | 0.75 | 15.87 | 2.76 | * | * | 1.97 | 5.71 | 8.46 | 13.31 | 1.26 |
| 200L | 55 | 110 | 17 | 15.16 | 1.57 | 17.72 | 3.23 | - | - | 5.91 | 5.52 | 8.46 | 13.31 | 1.26 |
| 225S | 55 | 110 | 17 | 15.16 | 1.57 | 17.72 | 3.23 | - | - | 8.15 | 5.52 | 8.46 | 13.31 | 1.26 |
| 225M | 55 | 110 | 17 | 15.16 | 1.57 | 17.72 | 3.23 | - | - | 8.15 | 5.52 | 8.46 | 13.31 | 1.26 |
| 250M | * | * | * | 18.50 | 3.94 | 22.44 | 3.23 | - | - | * | 5.31 | * | * | * |
| 280S | * | * | * | 20.67 | 4.33 | 24.60 | 3.23 | - | - | * | 6.30 | * | * | * |
| 280M | * | * | * | 20.67 | 4.33 | 24.60 | 3.23 | - | - | * | 6.30 | * | * | * |
| 315S | * | * | * | * | * | * | * | - | - | * | * | * | * | * |
| 315M | * | * | * | * | * | * | * | - | - | * | * | * | * | * |
| 315L | * | * | * | * | * | * | * | - | - | * | * | * | * | * |

*** Consult Factory**




Send Quote Requests to info@automatedpt.com
Call +1(800)985-6929 To Order or Order Online At Nordgearmotors.com

# Dimensions
# Conduit Box & Cable Entry



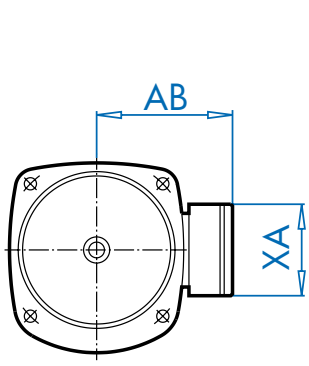


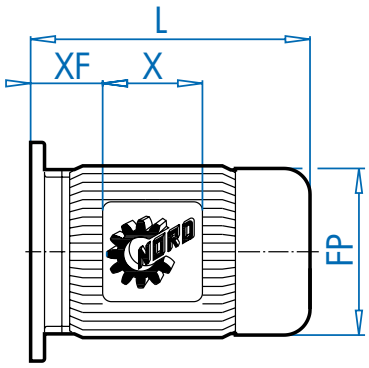


| Type / Flange | Options | Outline dimensions | | | | | | Cable entry | |
|---|---|---|---|---|---|---|---|---|---|
| 63S/L | | FP | AB | XF | X | L | XA | ce | ce-adapter |
| B14 | | 5.12 | 4.53 | 0.47 | 3.94 | 7.56 | 3.94 | 2 × M20×1.5 | 1/2" NPT |
| 160S | | 5.12 | 4.53 | 0.63 | 3.94 | 7.72 | 3.94 | 2 × M20×1.5 | 1/2" NPT |
| B14 | BRE | 5.12 | 4.84 | 0.71 | 5.28 | 9.76 | 3.50 | 2 × M20×1.5 | 1/2" NPT |
| 160S | BRE | 5.12 | 4.84 | 0.87 | 5.28 | 9.92 | 3.50 | 2 × M20×1.5 | 1/2" NPT |

| 71S/L | | FP | AB | XF | X | L | XA | ce | ce-adapter |
|---|---|---|---|---|---|---|---|---|---|
| B14 | | 5.71 | 4.88 | 0.79 | 3.94 | 8.43 | 3.94 | 2 × M20×1.5 | 1/2" NPT |
| 160S | | 5.71 | 4.88 | 1.65 | 3.94 | 9.29 | 3.94 | 2 × M20×1.5 | 1/2" NPT |
| 250S | | 5.71 | 4.88 | 1.42 | 3.94 | 9.06 | 3.94 | 2 × M20×1.5 | 1/2" NPT |
| B14 | BRE | 5.75 | 5.24 | 1.02 | 5.28 | 10.71 | 3.50 | 2 × M20×1.5 | 1/2" NPT |
| 160S | BRE | 5.75 | 5.24 | 1.89 | 5.28 | 11.57 | 3.50 | 2 × M20×1.5 | 1/2" NPT |
| 250S | BRE | 5.75 | 5.24 | 1.65 | 5.28 | 11.34 | 3.50 | 2 × M20×1.5 | 1/2" NPT |

| 80S/L/LH | | FP | AB | XF | X | L | XA | ce | ce-adapter |
|---|---|---|---|---|---|---|---|---|---|
| B14 | | 6.50 | 5.59 | 0.87 | 4.49 | 9.29 | 4.49 | 2 × M25×1.5 | 3/4" NPT |
| 160S | | 6.50 | 5.59 | 1.85 | 4.49 | 10.28 | 4.49 | 2 × M25×1.5 | 3/4" NPT |
| 250S | | 6.50 | 5.59 | 1.61 | 4.49 | 10.04 | 4.49 | 2 × M25×1.5 | 3/4" NPT |
| B14 | BRE | 6.50 | 5.59 | 1.02 | 6.02 | 11.81 | 4.25 | 2 × M25×1.5 | 3/4" NPT |
| 160S | BRE | 6.50 | 5.59 | 2.01 | 6.02 | 12.80 | 4.25 | 2 × M25×1.5 | 3/4" NPT |
| 250S | BRE | 6.50 | 5.59 | 1.77 | 6.02 | 12.56 | 4.25 | 2 × M25×1.5 | 3/4" NPT |

| 90S/L/SH/LH | | FP | AB | XF | X | L | XA | ce | ce-adapter |
|---|---|---|---|---|---|---|---|---|---|
| B14 | | 7.20 | 5.79 | 1.02 | 4.49 | 10.87 | 4.49 | 2 × M25×1.5 | 3/4" NPT |
| 160S | | 7.20 | 5.79 | 2.05 | 4.49 | 11.89 | 4.49 | 2 × M25×1.5 | 3/4" NPT |
| 250S | | 7.20 | 5.79 | 1.81 | 4.49 | 11.65 | 4.49 | 2 × M25×1.5 | 3/4" NPT |
| 300S | | 7.20 | 5.79 | 1.02 | 4.49 | 10.87 | 4.49 | 2 × M25×1.5 | 3/4" NPT |
| B14 | BRE | 7.20 | 5.79 | 1.18 | 6.02 | 13.82 | 4.25 | 2 × M25×1.5 | 3/4" NPT |
| 160S | BRE | 7.20 | 5.79 | 2.20 | 6.02 | 14.84 | 4.25 | 2 × M25×1.5 | 3/4" NPT |
| 250S | BRE | 7.20 | 5.79 | 1.97 | 6.02 | 14.61 | 4.25 | 2 × M25×1.5 | 3/4" NPT |
| 300S | BRE | 7.20 | 5.79 | 1.18 | 6.02 | 13.82 | 4.25 | 2 × M25×1.5 | 3/4" NPT |




Send Quote Requests to info@automatedpt.com
Call +1(800)985-6929 To Order or Order Online At Nordgearmotors.com

DRIVESYSTEMS



# Dimensions
# Conduit Box & Cable Entry

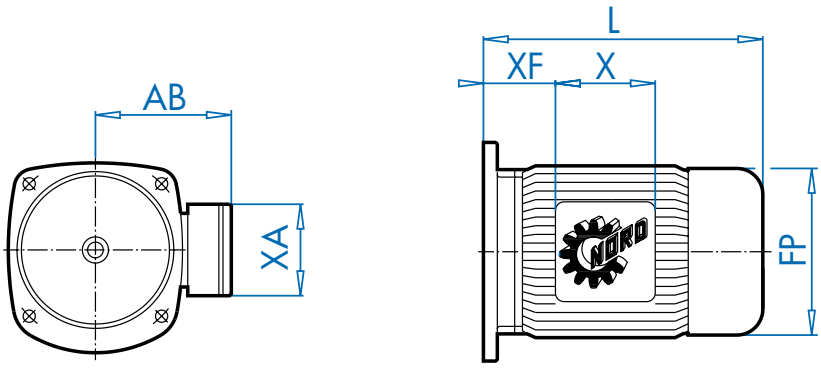


| Type / Flange | Options | Outline dimensions | | | | | | Cable entry | |
|---|---|---|---|---|---|---|---|---|---|
| 100L/L/LA/LH | | FP | AB | XF | X | L | XA | ce | ce-adapter |
| B14 | | 7.91 | 6.65 | 1.26 | 4.49 | 12.05 | 4.49 | 2 × M32×1.5 | 1" NPT |
| 160S | | 7.91 | 6.65 | 2.28 | 4.49 | 13.07 | 4.49 | 2 × M32×1.5 | 1" NPT |
| 250S | | 7.91 | 6.65 | 2.05 | 4.49 | 12.83 | 4.49 | 2 × M32×1.5 | 1" NPT |
| 300S | | 7.91 | 6.65 | 1.26 | 4.49 | 12.05 | 4.49 | 2 × M32×1.5 | 1" NPT |
| Ø 250 | | 7.91 | 6.65 | 1.26 | 4.49 | 12.05 | 4.49 | 2 × M32×1.5 | 1" NPT |
| B14 | BRE | 7.91 | 6.77 | 1.42 | 6.02 | 15.63 | 4.25 | 2 × M25×1.5 | 1" NPT |
| 160S | BRE | 7.91 | 6.77 | 2.44 | 6.02 | 16.65 | 4.25 | 2 × M25×1.5 | 1" NPT |
| 250S | BRE | 7.91 | 6.77 | 2.20 | 6.02 | 16.42 | 4.25 | 2 × M25×1.5 | 1" NPT |
| 300S | BRE | 7.91 | 6.77 | 1.42 | 6.02 | 15.63 | 4.25 | 2 × M25×1.5 | 1" NPT |
| Ø 250 | BRE | 7.91 | 6.77 | 1.42 | 6.02 | 15.63 | 4.25 | 2 × M25×1.5 | 1" NPT |

| 112M/SH/MH | | FP | AB | XF | X | L | XA | ce | ce-adapter |
|---|---|---|---|---|---|---|---|---|---|
| B14 | | 8.98 | 7.05 | 1.77 | 4.49 | 12.83 | 4.49 | 2 × M32×1.5 | 1" NPT |
| 160S | | 8.98 | 7.05 | 2.91 | 4.49 | 13.98 | 4.49 | 2 × M32×1.5 | 1" NPT |
| 250S | | 8.98 | 7.05 | 2.68 | 4.49 | 13.74 | 4.49 | 2 × M32×1.5 | 1" NPT |
| 300S | | 8.98 | 7.05 | 1.89 | 4.49 | 12.95 | 4.49 | 2 × M32×1.5 | 1" NPT |
| Ø 250 | | 8.98 | 7.05 | 1.77 | 4.49 | 12.83 | 4.49 | 2 × M32×1.5 | 1" NPT |
| B14 | BRE | 8.98 | 7.17 | 1.93 | 6.02 | 16.50 | 4.25 | 2 × M25×1.5 | 1" NPT |
| 160S | BRE | 8.98 | 7.17 | 3.07 | 6.02 | 17.64 | 4.25 | 2 × M25×1.5 | 1" NPT |
| 250S | BRE | 8.98 | 7.17 | 2.83 | 6.02 | 17.40 | 4.25 | 2 × M25×1.5 | 1" NPT |
| 300S | BRE | 8.98 | 7.17 | 2.05 | 6.02 | 16.61 | 4.25 | 2 × M25×1.5 | 1" NPT |
| Ø 250 | BRE | 8.98 | 7.17 | 1.93 | 6.02 | 16.50 | 4.25 | 2 × M25×1.5 | 1" NPT |

| 132S/M/SH/MH | | FP | AB | XF | X | L | XA | ce | ce-adapter |
|---|---|---|---|---|---|---|---|---|---|
| B14 | | 10.47 | 8.03 | 2.09 | 4.80 | 16.42 | 4.80 | 2 × M32×1.5 | 1" NPT |
| 250S | | 10.47 | 8.03 | 2.80 | 4.80 | 17.13 | 4.80 | 2 × M32×1.5 | 1" NPT |
| 300S | | 10.47 | 8.03 | 2.01 | 4.80 | 16.34 | 4.80 | 2 × M32×1.5 | 1" NPT |
| Ø 250 | | 10.47 | 8.03 | 2.80 | 4.80 | 17.13 | 4.80 | 2 × M32×1.5 | 1" NPT |
| B14 | BRE | 10.47 | 7.91 | 1.77 | 7.28 | 20.59 | 5.47 | 2 × M25×1.5 | 1" NPT |
| 250S | BRE | 10.47 | 7.91 | 7.28 | 7.28 | 21.34 | 5.47 | 2 × M25×1.5 | 1" NPT |
| 300S | BRE | 10.47 | 7.91 | 1.73 | 7.28 | 20.55 | 5.47 | 2 × M25×1.5 | 1" NPT |
| Ø 250 | BRE | 10.47 | 7.91 | 2.52 | 7.28 | 21.34 | 5.47 | 2 × M25×1.5 | 1" NPT |




Send Quote Requests to info@automatedpt.com
Call +1(800)985-6929 To Order or Order Online At Nordgearmotors.com

# Dimensions
# Conduit Box & Cable Entry



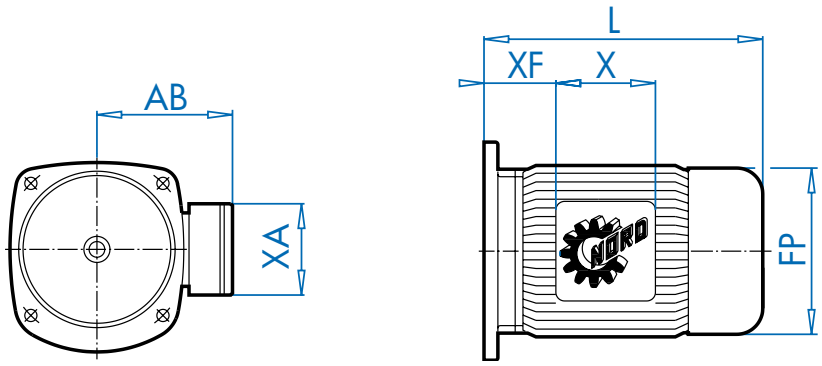


| Type / Flange 160M/L/MH | Options | Outline dimensions | | | | | | Cable entry | |
|---|---|---|---|---|---|---|---|---|---|
| | | FP | AB | XF | X | L | XA | ce | ce-adapter |
| 300S | | 12.60 | 8.90 | 3.07 | 6.50 | 18.82 | 6.50 | 2 × M40×1.5 | 1.0" NPT |
| Ø 300 | | 12.60 | 8.90 | 3.07 | 6.50 | 18.82 | 6.50 | 2 × M40×1.5 | 1.0" NPT |
| Ø 350 | | 12.60 | 8.90 | 3.07 | 6.50 | 18.82 | 6.50 | 2 × M40×1.5 | 1.0" NPT |
| 300S | BRE | 12.60 | 8.90 | 3.07 | 6.50 | 25.39 | 6.50 | 2 × M40×1.5 | 1.0" NPT |
| Ø 300 | BRE | 12.60 | 8.90 | 3.07 | 6.50 | 25.39 | 6.50 | 2 × M40×1.5 | 1.0" NPT |
| Ø 350 | BRE | 12.60 | 8.90 | 3.07 | 6.50 | 25.39 | 6.50 | 2 × M40×1.5 | 1.0" NPT |

| 160LH | | FP | AB | XF | X | L | XA | ce | ce-adapter |
|---|---|---|---|---|---|---|---|---|---|
| 300S | | 12.60 | 8.90 | 3.07 | 6.50 | 20.39 | 6.50 | 2 × M40×1.5 | 1.0" NPT |
| Ø 300 | | 12.60 | 8.90 | 3.07 | 6.50 | 20.39 | 6.50 | 2 × M40×1.5 | 1.0" NPT |
| Ø 350 | | 12.60 | 8.90 | 3.07 | 6.50 | 20.39 | 6.50 | 2 × M40×1.5 | 1.0" NPT |
| 300S | BRE | 12.60 | 8.90 | 3.07 | 6.50 | 27.13 | 6.50 | 2 × M40×1.5 | 1.0" NPT |
| Ø 300 | BRE | 12.60 | 8.90 | 3.07 | 6.50 | 27.13 | 6.50 | 2 × M40×1.5 | 1.0" NPT |
| Ø 350 | BRE | 12.60 | 8.90 | 3.07 | 6.50 | 27.13 | 6.50 | 2 × M40×1.5 | 1.0" NPT |

| 180MX/LX | | FP | AB | XF | X | L | XA | ce | ce-adapter |
|---|---|---|---|---|---|---|---|---|---|
| 300S | | 12.60 | 8.90 | 3.07 | 6.50 | 20.39 | 6.50 | 2 × M40×1.5 | 1.0" NPT |
| Ø 300 | | 12.60 | 8.90 | 3.07 | 6.50 | 20.39 | 6.50 | 2 × M40×1.5 | 1.0" NPT |
| Ø 350 | | 12.60 | 8.90 | 3.07 | 6.50 | 20.39 | 6.50 | 2 × M40×1.5 | 1.0" NPT |
| 300S | BRE | 12.60 | 8.90 | 3.07 | 6.50 | 27.13 | 6.50 | 2 × M40×1.5 | 1.0" NPT |
| Ø 300 | BRE | 12.60 | 8.90 | 3.07 | 6.50 | 27.13 | 6.50 | 2 × M40×1.5 | 1.0" NPT |
| Ø 350 | BRE | 12.60 | 8.90 | 3.07 | 6.50 | 27.13 | 6.50 | 2 × M40×1.5 | 1.0" NPT |

| 180MH/LH | | FP | AB | XF | X | L | XA | ce | ce-adapter |
|---|---|---|---|---|---|---|---|---|---|
| Ø 300 | | 14.09 | 10.20 | 4.45 | 5.20 | 24.49 | 5.98 | 2 × M40×1.5 | 1.0" NPT |
| Ø 350 | | 14.09 | 10.20 | 3.66 | 5.20 | 23.70 | 5.98 | 2 × M40×1.5 | 1.0" NPT |
| Ø 300 | BRE | 14.09 | 10.20 | 3.86 | 6.38 | 28.62 | 6.38 | 2 × M40×1.5 | 1.0" NPT |
| Ø 350 | BRE | 14.09 | 10.20 | 3.07 | 6.38 | 27.83 | 6.38 | 2 × M40×1.5 | 1.0" NPT |




Send Quote Requests to info@automatedpt.com
Call +1(800)985-6929 To Order or Order Online At Nordgearmotors.com

DRIVESYSTEMS



# Dimensions
# Conduit & Cable Entry

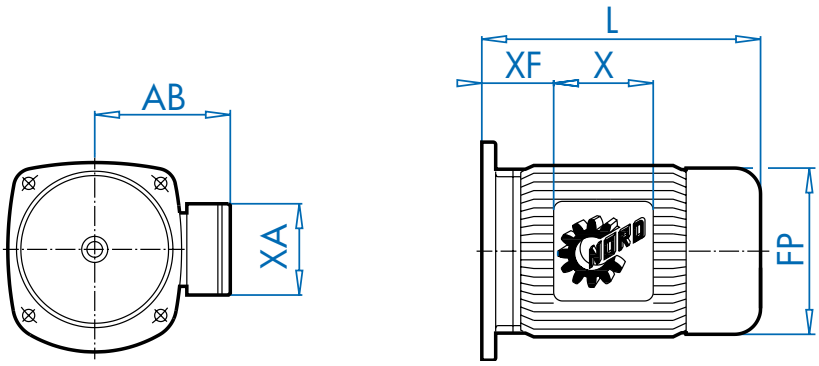


| Type / Flange | Options | Outline dimensions | | | | | | Cable entry | |
|---|---|---|---|---|---|---|---|---|---|
| 200L/LH | | FP | AB | XF | X | L | XA | ce | ce-adapter |
| Ø 350 | | 15.67 | 12.05 | 4.33 | 7.56 | 27.09 | 10.24 | 2 × M50×1.5 | 1.50"NPT |
| Ø 450 | | 15.67 | 12.05 | 3.70 | 7.56 | 26.46 | 10.24 | 2 × M50×1.5 | 1.50"NPT |
| Ø 350 | BRE | 15.67 | 12.05 | 4.33 | 7.56 | 33.66 | 10.24 | 2 × M50×1.5 | 1.50"NPT |
| Ø 450 | BRE | 15.67 | 12.05 | 3.70 | 7.56 | 33.03 | 10.24 | 2 × M50×1.5 | 1.50 "NPT |
| **225S/M** | | **FP** | **AB** | **XF** | **X** | **L** | **XA** | **ce** | **ce-adapter** |
| Ø 350 | | 15.67 | 12.05 | 4.33 | 7.56 | 27.09 | 10.24 | 2 × M50×1.5 | 1.50 "NPT |
| Ø 450 | | 15.67 | 12.05 | 3.70 | 7.56 | 26.46 | 10.24 | 2 × M50×1.5 | 1.50 "NPT |
| Ø 350 | BRE | 15.67 | 12.05 | 4.33 | 7.56 | 33.66 | 10.24 | 2 × M50×1.5 | 1.50 "NPT |
| Ø 450 | BRE | 15.67 | 12.05 | 3.70 | 7.56 | 33.03 | 10.24 | 2 × M50×1.5 | 1.50 "NPT |
| **225SH/MH** | | **FP** | **AB** | **XF** | **X** | **L** | **XA** | **ce** | **ce-adapter** |
| Ø 350 | | 17.52 | 12.80 | 5.32 | 7.56 | 26.97 | 10.24 | 2x M50x1.5 | 1.50 "NPT |
| Ø 450 | | 17.52 | 12.80 | 3.94 | 7.56 | 25.59 | 10.24 | 2x M50x1.5 | 1.50 "NPT |
| **250M** | | **FP** | **AB** | **XF** | **X** | **L** | **XA** | **ce** | **ce-adapter** |
| Ø 450 | | 19.49 | 15.43 | 5.08 | 9.29 | 29.92 | 11.81 | 2 × M63×1.5 | Ø 1.89 |
| Ø 450 | BRE | 19.49 | 15.43 | 5.08 | 9.29 | 38.19 | 11.81 | 2 × M63×1.5 | Ø 1.89 |
| **250MH** | | **FP** | **AB** | **XF** | **X** | **L** | **XA** | **ce** | **ce-adapter** |
| Ø 450 | | 19.49 | 15.43 | 5.08 | 9.29 | 32.68 | 11.81 | 2x M63x1.5 | Ø 1.89 |
| Ø 450 | BRE | 19.49 | 15.43 | 5.08 | 9.29 | 40.95 | 11.81 | 2x M63x1.5 | Ø 1.89 |
| **280S/SH** | | **FP** | **AB** | **XF** | **X** | **L** | **XA** | **ce** | **ce-adapter** |
| Ø 450 | | 22.64 | 17.91 | 4.06 | 9.21 | 34.06 | 12.60 | 2 × M63×1.5 | Ø 1.89 |
| Ø 450 | BRE | 22.64 | 17.91 | 4.06 | 9.21 | 45.28 | 12.60 | 2 × M63×1.5 | Ø 1.89 |
| **280M** | | **FP** | **AB** | **XF** | **X** | **L** | **XA** | **ce** | **ce-adapter** |
| Ø 550 | | 21.85 | 17.01 | 5.28 | 9.29 | 32.28 | 11.81 | 2 × M63×1.5 | Ø 1.89 |
| Ø 550 | BRE | 21.85 | 17.01 | 5.28 | 9.29 | 42.91 | 11.81 | 2 × M63×1.5 | Ø 1.89 |
| **280MH** | | **FP** | **AB** | **XF** | **X** | **L** | **XA** | **ce** | **ce-adapter** |
| Ø 550 | | 21.85 | 17.01 | 5.28 | 9.29 | 36.61 | 11.81 | 2x M63x1.5 | Ø 1.89 |
| Ø 550 | BRE | 21.85 | 17.01 | 5.28 | 9.29 | 47.24 | 11.81 | 2x M63x1.5 | Ø 1.89 |
| **315S/M** | | **FP** | **AB** | **XF** | **X** | **L** | **XA** | **ce** | **ce-adapter** |
| Ø 550 | | 25.39 | 20.28 | 4.53 | 10.47 | 38.19 | 15.16 | 2 × M63×1.5 | Ø 2.24 |
| **315MA/L** | | **FP** | **AB** | **XF** | **X** | **L** | **XA** | **ce** | **ce-adapter** |
| Ø 550 | | 25.39 | 20.28 | 4.53 | 10.47 | 43.70 | 15.16 | 2 × M63×1.5 | Ø 2.24 |

MOTORS


Send Quote Requests to info@automatedpt.com
Call +1(800)985-6929 To Order or Order Online At Nordgearmotors.com

# Dimensions
# SK 300E Trio Inverter



DRIVESYSTEMS

## Motor Dimensions with SK 300E Motor Mounted Vector Frequency Inverter

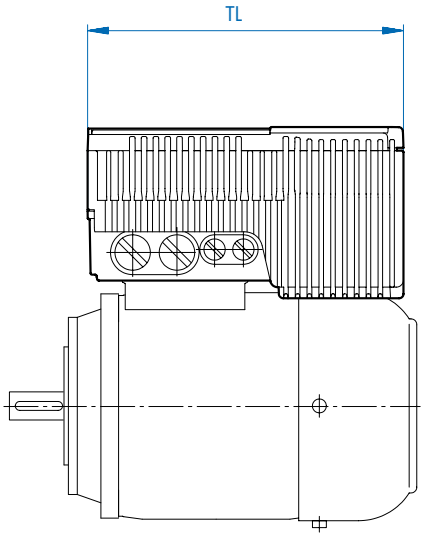


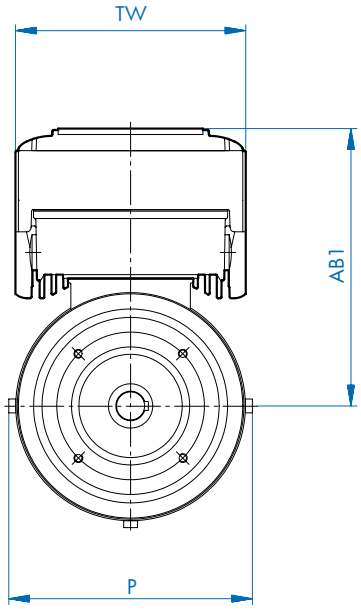


| Basic NORD Motor Description | Power Rating HP/kW | 240 VAC Input Inverter | | | 480 VAC Input Inverter | | |
|---|---|---|---|---|---|---|---|
| | | Type SK 300E | Inverter Size | AB1 [in] | Type SK 300E | Inverter Size | AB1 [in] |
| **63S/4** | 0.16 / 0.12 | **-370-323-B** | Size 1 | 7.48 | **-550-340-B** | Size 1 | 7.48 |
| **63L/4** | 0.25 / 0.18 | **-370-323-B** | Size 1 | 7.48 | **-550-340-B** | Size 1 | 7.48 |
| **71S/4** | 0.33 / 0.25 | **-370-323-B** | Size 1 | 7.78 | **-550-340-B** | Size 1 | 7.78 |
| **71L/4** | 0.50 / 0.37 | **-370-323-B** | Size 1 | 7.78 | **-550-340-B** | Size 1 | 7.78 |
| **80S/4** | 0.75 / 0.55 | **-550-323-B** | Size 1 | 7.42 | **-550-340-B** | Size 1 | 7.42 |
| **80L/4** | 1.00/ 0.75 | **-750-323-B** | Size 1 | 7.42 | **-750-340-B** | Size 1 | 7.42 |
| **90S/4** | 1.50/ 1.1 | **-111-323-B** | Size 2 | 8.69 | **-111-340-B** | Size 1 | 7.62 |
| **90L/4** | 2.00/ 1.5 | **-151-323-B** | Size 2 | 8.69 | **-151-340-B** | Size 1 | 7.62 |
| **100L/4** | 3.00/ 2.2 | **-221-323-B** | Size 2 | 9.19 | **-221-340-B** | Size 2 | 9.19 |
| **100LA/4** | 5.00/ 3.7 | **Not Available** | N/A | N/A | **-401-340-B** | Size 2 | 9.19 |

| Inverter Size | TL [in] | TW [in] | Weight [lbs] |
|---|---|---|---|
| Size 1 | 8.43 | 6.14 | 8.8 |
| Size 2 | 11.14 | 7.72 | 18.5 |


Send Quote Requests to info@automatedpt.com
Call +1(800)985-6929 To Order or Order Online At Nordgearmotors.com

Send Quote Requests to info@automatedpt.com
Call +1(800)985-6929 To Order or Order Online At Nordgearmotors.com



# Brakes

- Operation
- Selection-Torque
- Rectifiers
- Selection-Performance
- Mechanical Options
- Connection Diagrams

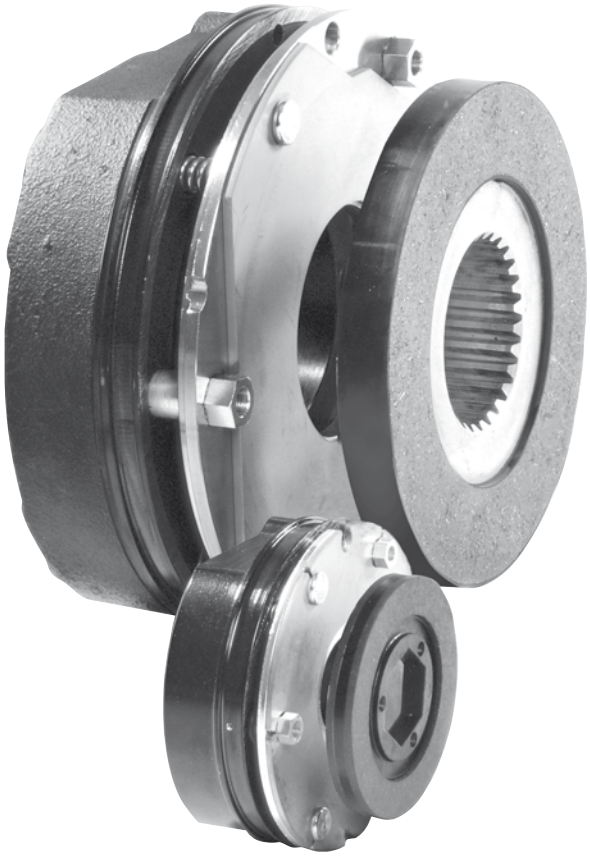

DRIVESYSTEMS

www.nord.com



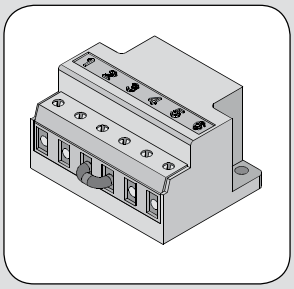

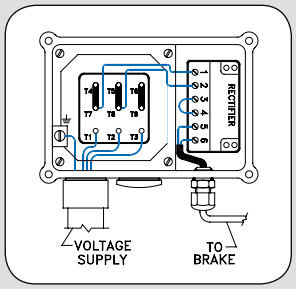


Send Quote Requests to info@automatedpt.com
Call +1(800)985-6929 To Order or Order Online At Nordgearmotors.com

Send Quote Requests to info@automatedpt.com Call +1(800)985-6929 To Order or Order Online At Nordgearmotors.com





## Motor-Brake Option (BRE)

The standard NORD motor brake is spring-set when power is removed from the brake circuit (power-off). The brake coil utilizes a DC voltage supplied through a rectified power source.

### Advantages

- Each NORD motor frame size has a number of brake sizes available, with different torque capacities.

- Brake adjustment is possible by changing the brake spring combinations. In addition, several common brake sizes also have an additional spanner-nut adjustment available.

- Compared to the many AC brakes on the market, NORD brakes offer better wear capacity, easier field adjustability, greater reliability, and lower end-cost to the consumer.

- NORD motor-brakes operate with a high degree of safety, because the brake is actively engaged with the no brake supply voltage (power-off).

- The rotating brake disc is environmentally safe with an asbestos-free friction material bonded to each side.

- The connection between the rectifier and the brake coil is already completed at the factory.

- The brake air-gap is factory-set but can easily be adjusted in the event of wear.

### Operation

The main AC supply power to the brake rectifier can be supplied from either the motor terminal board or from a separately switched power source.

- In typical direct-across-the-line motor operation, AC brake power may be supplied from the motor's terminal board.

- If the motor is a two-speed model, or if the motor is being controlled by a variable frequency drive or electrical soft-start, then the brake rectifier must be powered from a separate AC source.

When the brake is de-energized (Power off), the braking springs exert a force against the armature plate (pressure plate), preventing the brake rotor from rotating. Conversely, when the brake coil is energized (Power on), a magnetic field builds and pulls the armature plate across the air gap to the brake oil casing. This action frees the brake rotor and allows the motor shaft to rotate.



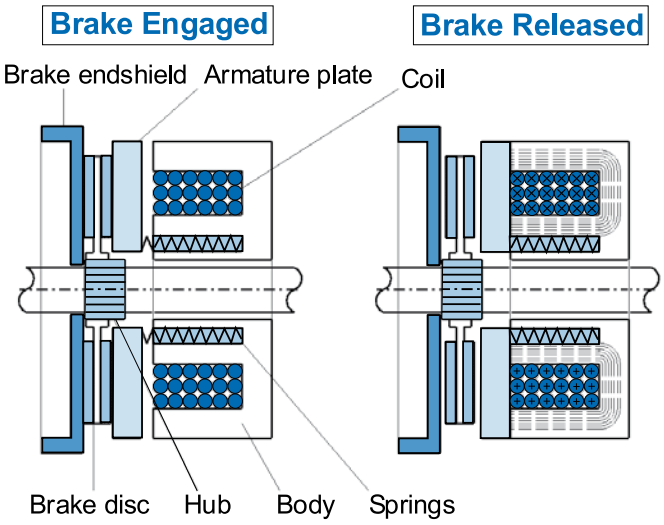


### Brake Selection

The selection of a motor brake system is broken down into five phases. The selection of the braking torque, the selection of the braking times (release times and setting times), the selection of the electrical supply and connection, the selection of brake options, and the final phase is the verification of the permissible brake work.

### Selection steps

1) Brake torque (page 730)
2) Brake times (page 734)
3) Electrical supply and connection (page 735)
4) Brake options (page 737)
5) Brake work verification (page 742)




Send Quote Requests to info@automatedpt.com
Call +1(800)985-6929 To Order or Order Online At Nordgearmotors.com

Send Quote Requests to info@automatedpt.com Call +1(800)985-6929 To Order or Order Online At Nordgearmotors.com







**Brake Options**

| Abbreviation | Description | Page |
|---|---|---|
| ADJ | **Torque Adjustment** - Brake torque may be adjusted at the factory | 731 |
| DBR | **Double Brake (2xBRE)** - Double brakes are used for redundancy and additional safety | 740 |
| FBR | **Brass Foil** - Provides a brass foil in the brake air-gap to provide faster braking times | 738 |
| FHL | **Locking Hand Release Lever** - Lockable manual hand release lever | 737 |
| HL | **Hand Release Lever** - Manual hand release lever | 737 |
| HLH | **Hand Release Lever with Hole** - Hand lever with 5.5mm hole | 737 |
| IP66 | **IP66 Brake Enclosure** - Brake with IP66 enclosure | 737 |
| IR | **Current Sensing Relay** - Fast brake engagement (stopping) without external control equipment | 739 |
| MIK | **Micro-Switch** - Brake fitted with a micro-switch for sensing the brake state (released or engaged) | 738 |
| NRB1 | **Quiet Brake Release** - An o-ring is placed between the coil body and the armature plate for noise reduction | 738 |
| NRB2 | **Quiet Brake Motor Operation** - An o-ring is placed between the carrier hub & the armature plate to prevent clattering. | 738 |
| RG | **Corrosion Protected Brake** - Corrosion protected brake | 737 |
| SR | **Dust & Corrosion Protected Brake** - Dust & corrosion protected brake | 737 |
| --- | **Brake Heating** - Provides heating to avoid condensation | 737 |

**Rectifier Options**

| Abbreviation | Description | Page |
|---|---|---|
| Rectifiers | Most NORD brakes are provided with a rectifier that converts AC voltage to DC voltage. Rectifiers are used because most motors are AC powered, but brakes require DC power. | 732 |
| G...V | **Sealed Rectifier** - Rectifiers sealed with an electrically safe resin | 732 |
| GP... | **High Performance Rectifier** - Improves brake release and stopping times | 733 |

## Brake Nomenclature

BRE – –

- Additional Brake Options
- Brake Size/Torque Rating
- Brake

## Ordering Examples

BRE 100 HL RG IR

- Current Sensing Relay
- Corrosion Protected Brake
- Hand Release Lever
- 100 Nm Brake Torque
- Brake

Brake, 100 Nm with a hand release lever, corrosion protected brake, and a current sensing relay.

BRE 40 FHL SR

- Dust & Corrosion Prot. Brake
- Locking Hand Release Lever
- 40 Nm Brake Torque
- Brake

Brake, 40 Nm with a locking hand release lever and dust & corrosion protected brake.





Send Quote Requests to info@automatedpt.com
Call +1(800)985-6929 To Order or Order Online At Nordgearmotors.com

# General Information



## Brake Torque Selection

Each NORD motor size has a number of brake torque sizes available. The BRE value in the table below is the standard brake torque size for each motor.

Example for ordering: SK 32 - S/4 **BRE10**

(**BRE 10** indicates a brake torque size of 10 Nm)

**CAUTIONS**

- BRE800 and BRE1200 brakes may only be controlled with a fast reaction rectifier (overexcitation), the maximum permissable nominal currents of the rectifier must be considered!

## General Selection Considerations

NORD relies on the equipment builder to specify appropriate brake sizing for their application, while giving consideration to the following:

- For most applications, we advise sizing the brake to 1.5 - 2 times the motor rated torque.
- For vertical applications, it may be advisable to size the brake size up to 3 times the motor rated torque.
- For some applications, it may be necessary to specify a reduced brake torque setting to prevent excessive peak load conditions developed at the reducer output.
- On travel drive applications, excessive brake torque may lead to wheel skid; in addition on crane applications excess hoist-cable swing can result.

| Motor Size & Efficiency | | | | Brake Size and Torque | | | | | | | | | | | |
|---|---|---|---|---|---|---|---|---|---|---|---|---|---|---|---|
| Frame Size | SE | EE | PE | | BRE5 | BRE10 | BRE20 | BRE40 | BRE60 | BRE100 | BRE150 | BRE250 | BRE400 | BRE800 | BRE1200 |
| | | | | Nm | 5 | 10 | 20 | 40 | 60 | 100 | 150 | 250 | 400 | 800 | 1200 |
| | | | | lb-in | 44 | 89 | 177 | 354 | 531 | 885 | 1328 | 2213 | 3540 | 7080 | 10620 |
| | | | | lb-ft | 3.7 | 7.4 | 14.8 | 29.5 | 44.3 | 73.8 | 111 | 184 | 295 | 590 | 885 |
| 63 | S/L | | | | Std. | Opt. * # | | | | | | | | | |
| 71 | S/L | | | | Std. | Opt. * | | | | | | | | | |
| 80 | S | SH | | | Std. | Opt. | Opt. * | | | | | | | | |
| 80 | L | LH | LP | | Opt. | Std. | Opt. * | | | | | | | | |
| 90 | S | SH | SP | | | Opt. | Std. | Opt. | | | | | | | |
| 90 | L | LH | LP | | | Opt. | Std. | Opt. | | | | | | | |
| 100 | L | LH | LP | | | | Std. | Opt. | Opt. # | | | | | | |
| 100 | LA | AH | AP | | | | Opt. | Std. | Opt. # | | | | | | |
| 112 | | SH | | | | | Opt. | Std. | Opt. | | | | | | |
| 112 | M | MH | MP | | | | Opt. | Opt. | Std. | | | | | | |
| 132 | S | SH | SP | | | | | | Std. | Opt. | Opt. * | | | | |
| 132 | M | MH | MP | | | | | | Opt. | Std. | Opt. * | | | | |
| 132 | MA | | | | | | | | Opt. | Opt. | Std. * | | | | |
| 160 | | SH | | | | | | | | Opt. | Std. | Opt. | | | |
| 160 | M | MH | MP | | | | | | | Opt. | Std. | Opt. | | | |
| 160 | L | LH | LP | | | | | | | Opt. | Opt. | Std. | | | |
| 180 | MX | | | | | | | | | | Opt. | Std. | | | |
| 180 | LX | | | | | | | | | | Opt. | Std. | | | |
| 180 | | MH | MP | | | | | | | | | Std. | Opt.*# | | |
| 180 | | LH | LP | | | | | | | | | Std. | Opt.*# | | |
| 200 | LX | XH | | | | | | | | | | Opt. | Std.*# | | |
| 200 | L | | | | | | | | | | | Opt. | Std. | | |
| 225 | S | SH | | | | | | | | | | | Std. | Opt. *2) | |
| 250 | M | MH | | | | | | | | | | | Opt. | Std. *2) | |
| 280 | S | SH | | | | | | | | | | | | Std. *2) | Opt. *3) |
| 280 | M | MH | | | | | | | | | | | | Std. *2) | Opt. *3) |
| Weight | | kg | | | 2 | 3 | 5.5 | 7 | 10 | 16 | 22 | 32 | 50 | 80 | 100 |
| | | lb | | | 4.4 | 6.6 | 12.1 | 15.4 | 22 | 35 | 49 | 71 | 110 | 176 | 220 |
| Inertia | | kg-m² x 10⁻³ | | | 0.015 | 0.045 | 0.153 | 0.45 | 0.86 | 1.22 | 2.85 | 6.65 | 19.5 | 39 | 39 |
| | | lb-ft² x 10⁻³ | | | 0.356 | 1.068 | 3.63 | 10.68 | 20.4 | 29.0 | 67.6 | 158 | 463 | 925 | 925 |

* IP66 brake not possible

# Manual brake release option not possible

2) When used as a stopping brake, evaluation is essential.

3) Designed as a holding brake or emergency stop only.

Std - Standard Offering

Opt - Optional Offering

BRAKES


Send Quote Requests to info@automatedpt.com
Call +1(800)985-6929 To Order or Order Online At Nordgearmotors.com





## Torque Adjustment (ADJ)

Mod

The brake torque can be adjusted by changing the brake spring combinations. Additionally, on brakes up to size BRE40, the user can can make fine torque adjustments by turning the spanner nut. From the factory, the spanner nut will be tight against the brake casing. The braking torque is adjusted by unscrewing the spanner nut a number of clicks with a spanner wrench.

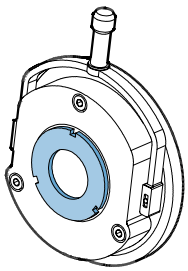

**When Ordering the Torque Adjustment option specify ADJ _____ Nm**

| Torque Spring Adjustments | | | | | | | | | | | |
|---|---|---|---|---|---|---|---|---|---|---|---|
| # Springs | Unit | BRE5 | BRE10 | BRE20 | BRE40 | BRE60 | BRE100 | BRE150 | BRE250 | BRE400 | BRE800 |
| 8 | [Nm] | | | | | | | | 250 | 400 | 800 |
| | [lb-ft] | | | | | | | | 184 | 295 | 590 |
| 7 | [Nm] | 5 | 10 | 20 | 40 | 60 | 100 | 150 | | | |
| | [lb-ft] | 3.7 | 7.4 | 14.8 | 29.5 | 44.3 | 74 | 111 | | | |
| 6 | [Nm] | | | | | | | | 187 | 300 | 600 |
| | [lb-ft] | | | | | | | | 138 | 221 | 443 |
| 5 | [Nm] | 3.5 | 7 | 14 | 28 | 46 | 70 | 107 | | | |
| | [lb-ft] | 2.6 | 5.2 | 10.3 | 20.7 | 33.9 | 51.6 | 79.0 | | | |
| 4 | [Nm] | 3 | 6 | 12 | 23 | 34 | 57 | 85 | 125 | 200 | 400 |
| | [lb-ft] | 2.2 | 4.4 | 8.9 | 17.0 | 25.1 | 42.0 | 62.7 | 92 | 148 | 295 |
| 3 | [Nm] | 2 | 4 | 8 | 17 | 26 | 42 | 65 | | | |
| | [lb-ft] | 1.5 | 3.0 | 5.9 | 12.5 | 19.2 | 31.0 | 47.9 | | | |

| Reduction of Brake Torque | | | | | |
|---|---|---|---|---|---|
| | Unit | BRE5 | BRE10 | BRE20 | BRE40 |
| Torque Reduction per Spanner Nut Click (Adjustment Step) | [Nm] | 0.2 | 0.2 | 0.3 | 1.0 |
| | [lb-ft] | 0.15 | 0.15 | 0.22 | 0.74 |
| Lowest Torque Setting with Spring Removal and Spanner Nut Adjustment | [Nm] | 0.8 | 1.6 | 4.4 | 5 |
| | [lb-ft] | 0.59 | 1.18 | 3.25 | 3.69 |



## CAUTIONS

- **Brake torque** - The brake torque is measured with a mean friction radius of the brake pad surface with a circumferential speed of 1m/sec (197 fpm).
- **Brake torque tolerance** - For different applications and operating conditions, brake torque can vary from +40/-20% compared to the rated brake torque.
- **Initial operation & wear in period** - In new condition, the brake will have a reduced torque of up to 30%. In order to achieve full rated brake torque, a short break in period is required. The break in time will vary depending on system loads.
- **Setting times** - The lower the brake torque, the longer the brake setting times.
- **Release times** - The lower the brake torque, the faster the brake release times.


Send Quote Requests to info@automatedpt.com
Call +1(800)985-6929 To Order or Order Online At Nordgearmotors.com

Send Quote Requests to info@automatedpt.com Call +1(800)985-6929 To Order or Order Online At Nordgearmotors.com

# General Information



## Brake Control Rectifiers

NORD brake control rectifiers convert AC voltage to DC voltage. Rectifiers are used because most applications require AC voltage to power the motor, but DC power is required to power the brake and DC power is not typically available.

NORD brakemotors include the rectifier located inside the terminal box. NORD rectifiers have six terminals and can be powered by the motor terminal block, or by a separate power source.

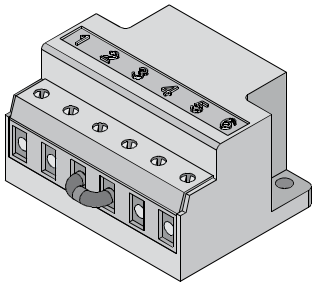

| Rectifier Terminals | Description |
|---|---|
| 1 & 2 | Brake Supply AC Voltage |
| 3 & 4 | DC-Switching Contact or Jumper |
| 5 & 6 | Connection to Brake Coil |

## Rectifier Advantages:

- Individual power source for each brake
- Compact size, mounted inside the terminal box
- Multiple voltage options, types, and release/engagement modes available
- Mountable in remote control cabinet
- Integral protection against voltage spikes

## Rectifier Types:

- **Full-wave rectifier:** The DC output voltage is 90% of the applied input AC voltage – types "GV…"
- **Half-wave rectifier:** The DC output voltage is 45% of the applied input AC voltage – types "GH…"
- **Push-hybrid rectifier (full-wave and half-wave):** The rectifier is designed to switch from an initial full-wave mode to a final half-wave mode in approximately 250 ms – types "GP…"

## Rectifier Nomenclature

G H E 4 0 L

- **Electronic Protection**
  - L = Varnish coated
  - V = Encapsulated
- **Voltage Range**
  - 20 = up to 275VAC input
  - 40 = up to 480VAC input
  - 50 = up to 575VAC input
- **Type of DC Switching**
  - E = External DC-switching (contact)
  - U = Internal DC-switching (voltage)
- **Type of Rectifier**
  - H= Half-wave
  - V = Full-wave (bridge)
  - P = Push-Hybrid (full & half-wave)
  - U = Dual (full & half-wave)
- **Rectifier**

## Standard Rectifier

NORD standard rectifiers are provided with each brake motor (except 24 VDC brakes) unless a sealed or high performance rectifier is specified.

| Standard Rectifier | | | |
|---|---|---|---|
| **Nomenclature** | **Part #** | **Type** | **Color** |
| **GVE20L** | 19141000 | Full-wave | Black |
| **GHE40L** | 19141010 | Half-wave | Yellow |
| **GHE50L** | 19141020 | Half-wave | Grey |

## Sealed Rectifiers G…V

NORD offers rectifiers that are sealed with an electrically safe resin to ensure that water and moisture will not pass into the rectifier. Sealed rectifiers have the same brake performance ratings as the standard rectifier and can be beneficial if water is present in the motors terminal box.

| Sealed Rectifier | | | |
|---|---|---|---|
| **Nomenclature** | **Part #** | **Type** | **Color** |
| **GVE20V** | 19141030 | Full-wave | Black |
| **GHE40V** | 19141040 | Half-wave | Yellow |
| **GHE50V** | 19141050 | Half-wave | Grey |




Send Quote Requests to info@automatedpt.com
Call +1(800)985-6929 To Order or Order Online At Nordgearmotors.com

Send Quote Requests to info@automatedpt.com Call +1(800)985-6929 To Order or Order Online At Nordgearmotors.com



## AC Switching (Standard Stopping)

The rectifier can be wired to operate by supplying and removing AC power, commonly called AC switching. The advantage to using AC switching is that the rectifier can be powered directly from the motor's terminal block and no additional wiring is required. However, tapping into the motor's terminal block gives the slower stopping time due to the de-energizing time of the motor's magnetic field. The stopping time can be improved by wiring the rectifier from an external power supply.

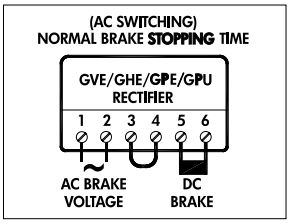


## DC switching (Fast Stopping)

DC switching directly interrupts the current flow in the DC circuit of the rectifier. This provides much faster stopping, because you do not need to wait for the motor's magnetic field to de-energize. To implement DC switching, a normally open relay must be installed between terminals 3 and 4 on the rectifier for rectifier types GVE, GHE, and GPE. For GPU type rectifiers simply remove the jumper between terminals 3 & 4 to activate DC switching.

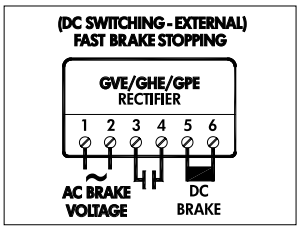


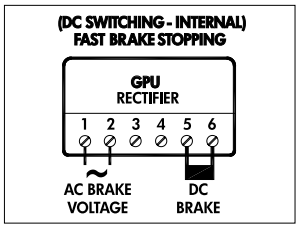


## GP... High Performance Rectifiers

The "GP…" high performance rectifiers improve brake release time and stopping time. The "GP…." rectifier is a push-hybrid rectifier; meaning that it initially acts as a full-wave rectifier for approximately 250 ms, after which it operates as a half-wave rectifier.

There are two types of "GP…" rectifiers. The first type utilizes External DC Switching "GPE...", this is primarily used in across-the-line applications, where the brake power is supplied from the motor terminal block. The second type utilizes Integrated DC Switching "GPU...". The built-in DC switching of the "GPU" rectifiers is supply voltage triggered. The "GPU" rectifiers can only be used when the brake is powered separately from the motor. Examples include using a frequency inverter, two-speed motor or soft-starter. The "GPU" rectifiers are not suitable for use when the brake power is taken form the motor supply power (motor terminal block).

There are two ways to apply "GP…" rectifiers. The first is called, "overexcitation (fast brake release)" and the second is called, "reduced power holding (very fast stopping)"

| **GPE - High Performance Rectifier** with External DC switching | | | |
|---|---|---|---|
| **Nomenclature** | **Part #** | **Type** | **Color** |
| **GPE20L** | 19140230 | Push-hybrid | Black |
| **GPE40L** | 19140240 | Push-hybrid | Black |

| **GPU - High Performance Rectifier** with Integrated DC switching | | | |
|---|---|---|---|
| **Nomenclature** | **Part #** | **Type** | **Color** |
| **GPU20L** | 19140090 | Push-hybrid | Black |
| **GPU40L** | 19140170 | Push-hybrid | Black |

## Overexcitation (fast brake release)

In overexcitation, the rectifier initially over-voltages (overexcites) the brake coil, causing a stronger than normal magnetic field which releases the brake quicker than normal. The rectifier then is switched to a lower holding voltage so it does not thermally overload the brake coil. In this method, the brake coil is selected as if the brake system is powered by a half-wave rectifier. In other words, the DC brake voltage should be 45% of the applied AC rectifier input voltage. This brake control is also sometimes referred to as "Voltage Forcing" or "Supercharging".

Overexcitation is commonly used in very high cycling brakemotor applications to reduce motor heating during the motor start and brake release.

## Reduced Power Holding (very fast stopping)

In reduced power holding, the rectifier initially supplies the rated DC voltage to the brake coil. When voltage is first applied, the rectifier operates as a full-wave rectifier (90% of the applied AC voltage), releasing the brake in the standard time. After the brake is released, the rectifier switches to half-wave mode (45% of the applied DC voltage), weakening the brake's magnetic field. The weaker field will allow the brake to stop more quickly when power is removed. In this method the brake coil is selected as if the brake system is powered by a full-wave rectifier. Therefore, the brake coil's DC voltage rating should be 90% of the AC voltage applied to the rectifier.




Send Quote Requests to info@automatedpt.com
Call +1(800)985-6929 To Order or Order Online At Nordgearmotors.com

# Selection



## Brake Times & Electrical Selection

Brake timing performance is critical in selecting the optimal brake system. NORD brakes can provide exceptional performance in terms of the release (start) times and engagement (stop) times. Use the following guidelines in order to select the correct brake control components and connections.

**1)** Determine if the brake needs to be wired directly from the motor terminal block or powered by a separate source.

- If you are using a frequency inverter, soft-start or a two speed motor you will need to supply the rectifier from a separate power source.

- If the motor is powered direct across-the-line the rectifier power can be supplied from the motor's terminal block.

**2)** What type of performance do I need?

- Is the standard brake performance OK?

- Is a higher performance required for fast brake release or very fast brake stopping?

## Selection Sugestions

### When Fast or Very Fast Stopping is Recommended

Any applications that require quick stops and positive action at stand-still

- conveyors and inclined conveyors
- hoists and lifts
- bulkmaterialhandlingequipment(bucketelevators, idler conveyor's).

**CAUTIONS**

- **Hoisting (lifting/lowering) applications** - must have the brake wired for fast response.

### When Fast-Release is Recommended (Overexcitation)

Any application that is very high-cycling with frequent starts and stops. These applications require the brake to release very-quickly in order to avoid excessive heat build-up in the AC motor and brake coil.

- Index conveyors
- Diverters
- Storage and retrieval crane systems

| Power Source | Brake Release (start) | Brake engagement (stop) | Braking Method * | Rectifier |
|---|---|---|---|---|
| Motor Terminal Block | Standard | Standard (AC switching) | 10 | GVE/GHE |
| | Standard | Fast (DC switching) | 15 | GVE/GHE |
| | Standard | Very Fast (Reduced power holding) | 40 | GPE |
| | Fast (Overexcitation) | Standard (AC switching) | 30 | GPE |
| | Fast (Overexcitation) | Fast (DC switching) | 35 | GPE |
| Separate Power Source | Standard | Standard (AC switching) | 20 | GVE/GHE |
| | Standard | Fast (DC switching) | 25 | GVE/GHE |
| | Standard | Very Fast (Reduced power holding) | 55 | GPU |
| | Fast (Overexcitation) | Standard (AC switching) | 45 | GPU |
| | Fast (Overexcitation) | Fast (DC switching) | 50 | GPU |

*** Braking methods referenced in connection diagrams on pages 743 - 748**




Send Quote Requests to info@automatedpt.com
Call +1(800)985-6929 To Order or Order Online At Nordgearmotors.com

Send Quote Requests to info@automatedpt.com Call +1(800)985-6929 To Order or Order Online At Nordgearmotors.com







**3)** What is the AC brake supply voltage?

The table below determines the rectifier and DC brake voltage required, based on the AC supply voltage & braking method.

| AC Brake Supply Voltage (VAC) | Braking Method | Rectifier Model Type | DC Brake Voltage (VDC) | Rectifier Part Number |
|---|---|---|---|---|
| **115** (105-120) | 20 | GVE20L | 105 | 19141000 |
| | 25 | GVE20L | 105 | 19141000 |
| **208** (200-208) | 10 | GVE20L | 180 | 19141000 |
| | 15 | GVE20L | 180 | 19141000 |
| | 20 | GVE20L | 180 | 19141000 |
| | 25 | GVE20L | 180 | 19141000 |
| | 40 | GPE20L | 180 | 19140230 |
| | 55 | GPU20L | 180 | 19140090 |
| **230** (220-240) | 10 | GVE20L | 205 | 19141000 |
| | 10 | GHE40L | 105 | 19141010 |
| | 15 | GVE20L | 205 | 19141000 |
| | 15 | GHE40L | 105 | 19141010 |
| | 20 | GVE20L | 205 | 19141000 |
| | 20 | GHE40L | 105 | 19141010 |
| | 25 | GVE20L | 205 | 19141000 |
| | 25 | GHE40L | 105 | 19141010 |
| | 30 | GPE20L | 105 | 19140230 |
| | 35 | GPE20L | 105 | 19140230 |
| | 40 | GPE20L | 205 | 19140230 |
| | 45 | GPU20L | 105 | 19140090 |
| | 50 | GPU20L | 105 | 19140090 |
| | 55 | GPU20L | 205 | 19140090 |
| **400** (380-415) | 10 | GHE40L | 180 | 19141010 |
| | 15 | GHE40L | 180 | 19141010 |
| | 20 | GHE40L | 180 | 19141010 |
| | 25 | GHE40L | 180 | 19141010 |
| | 30 | GPE40L | 180 | 19140240 |
| | 35 | GPE40L | 180 | 19140240 |
| | 45 | GPU40L | 180 | 19140170 |
| | 50 | GPU40L | 180 | 19140170 |
| **460** (440-480) | 10 | GHE40L | 205 | 19141010 |
| | 15 | GHE40L | 205 | 19141010 |
| | 20 | GHE40L | 205 | 19141010 |
| | 25 | GHE40L | 205 | 19141010 |
| | 30 | GPE40L | 205 | 19140240 |
| | 35 | GPE40L | 205 | 19140240 |
| | 45 | GPU40L | 205 | 19140170 |
| | 50 | GPU40L | 205 | 19140170 |
| **500** | 10 | GHE50L | 225 | 19141020 |
| | 15 | GHE50L | 225 | 19141020 |
| | 20 | GHE50L | 225 | 19141020 |
| | 25 | GHE50L | 225 | 19141020 |
| **575** (550-600) | 10 | GHE50L | 250 | 19141020 |
| | 15 | GHE50L | 250 | 19141020 |
| | 20 | GHE50L | 250 | 19141020 |
| | 25 | GHE50L | 250 | 19141020 |



Specify Rectifier Model Type _____ And DC Brake Voltage _____





Send Quote Requests to info@automatedpt.com
Call +1(800)985-6929 To Order or Order Online At Nordgearmotors.com

# Rectifier Ratings & Dimensions

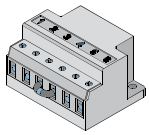

DRIVESYSTEMS

## Standard Rectifier Dimensions

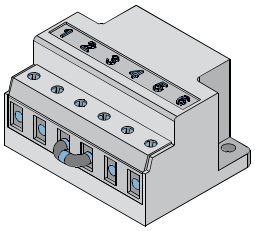

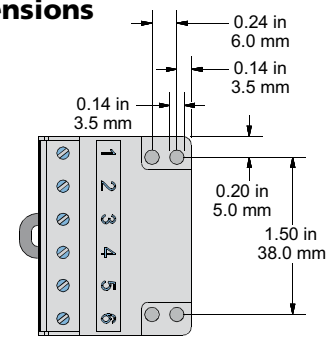


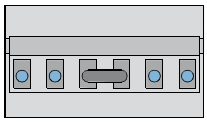


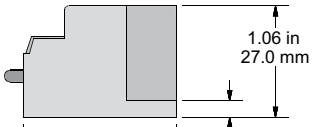


## GP Rectifier Dimensions

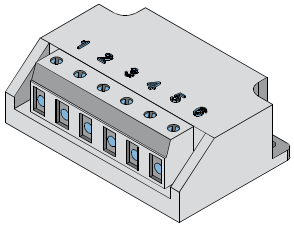

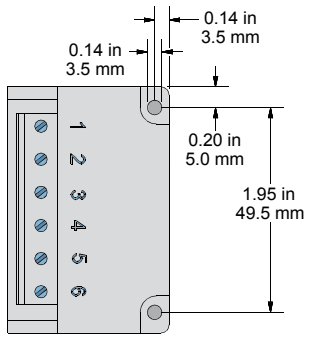


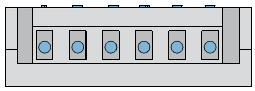


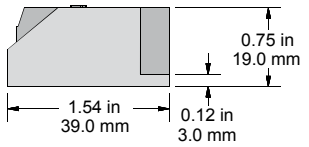


## Rectifier Overview

| Rectifier Model Type | Part Number | Part Color | Type 1 input Voltage | Input Voltage Range | Output Voltage | Rated Output Current | | DC switching Mode |
|---|---|---|---|---|---|---|---|---|
| | | | | | | (40°C) | (75°C) | |
| **Standard Protected Electronics "L"** | | | | | | | | |
| **GVE20L Full-Wave** | 19141000 | Black | 230VAC | 110-275VAC +/- 10% | 205VDC (VDC = VAC x 0.9) | 1.5ADC | 1.0ADC | External Contact |
| **GHE40L Half-Wave** | 19141010 | Yellow | 480VAC | 200-480VAC +/- 10% | 216VDC (VDC = VAC x 0.45) | 2.0ADC | 1.0ADC | External Contact |
| **GHE50L Half-Wave** | 19141020 | Grey | 575VAC | 200-575VAC +/- 10% | 259VDC (VDC = VAC x 0.45) | 2.0ADC | 1.0ADC | External Contact |
| **GPE20L Push-Hybrid** | 19140230 | Black | 230VAC | 200-275VAC +/- 10% | 205VDC / 105VDC (VDC = VAC x 0.9) / (VDC = VAC x 0.45) | 0.7ADC | 0.5ADC | External Contact |
| **GPE40L Push-Hybrid** | 19140240 | Black | 480VAC | 380-480VAC +/-10% | 432VDC / 216VDC (VDC = VAC x 0.9) / (VDC = VAC x 0.45) | 0.7ADC | 0.5ADC | External Contact |
| **GPU20L Push-Hybrid** | 19140090 | Black | 230VAC | 200-275VAC +/- 10% | 205VDC / 105VDC (VDC = VAC x 0.9) / (VDC = VAC x 0.45) | 0.7ADC | 0.5ADC | Internal Activation* |
| **GPU40L Hybrid** | 19140170 | Black | 480VAC | 380-480VAC +/-10% | 432VDC / 216VDC (VDC = VAC x 0.9) / (VDC = VAC x 0.45) | 0.7ADC | 0.5ADC | Internal Activation* |
| **Rectifier Electronics Protected with Potting Option "V"** | | | | | | | | |
| **GVE20V Full-Wave** | 19141030 | Black | 230VAC | 110-275VAC +/- 10% | 205VDC (VDC = VAC x 0.9) | 1.5ADC | 1.0ADC | External Contact |
| **GHE40V Half-Wave** | 19141040 | Yellow | 480VAC | 200-480VAC +/- 10% | 216VDC (VDC = VAC x 0.45) | 2.0ADC | 1.0ADC | External Contact |
| **GHE50V Half-Wave** | 19141050 | Grey | 575VAC | 200-575VAC +/- 10% | 259VDC (VDC = VAC x 0.45) | 2.0ADC | 1.0ADC | External Contact |

* Voltage based - deactivated with a jumper between terminals 3 & 4

BRAKES


Send Quote Requests to info@automatedpt.com
Call +1(800)985-6929 To Order or Order Online At Nordgearmotors.com

Send Quote Requests to info@automatedpt.com
Call +1(800)985-6929 To Order or Order Online At Nordgearmotors.com







## Hand Release Lever (HL)

Mod

The hand release option allows the brake to be manually released without requiring that the brake be energized with voltage. The lever has a spring return that allows the brake to be hand released and returned automatically to its set position. The hand release lever can be unscrewed for easy removal.

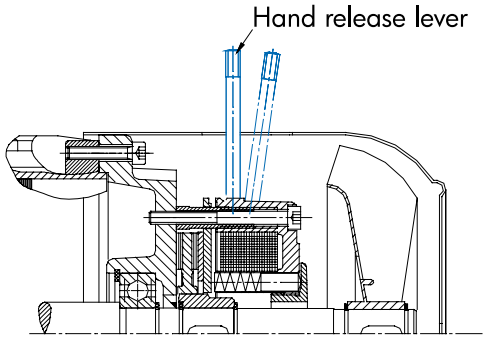


## Locking Hand Release Lever (FHL)

Mod

This option allows the brake to be manually released and locked off without requiring voltage to the brake. The lock mechanism prevents the spring from returning the brake to a closed state without manual action by the user. The hand release lever can be unscrewed for easy removal.

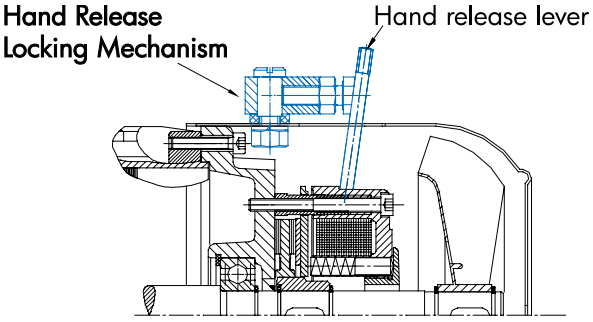


## Hand Release Lever With Hole (HLH)

Build

The hand release levers can be provided with a 5.5mm through hole. The hole can be used for attaching external pulling devices such as a cord to release the brake at a distance. This option is available for brake sizes BRE5 to BRE60.

**Hand Release Lever Location Required for HL, FHL and HLH**

- ❍ Position 1
- ❍ Position 2
- ❍ Position 3
- ❍ Position 4

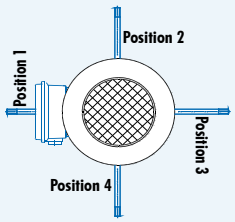


## Corrosion Protected Brake (RG)

Build

The brake is fitted with a stainless steel brake plate to provide additional corrosion protection in severe and wet environments.

## Dust & Corrosion Protected Brake (SR)

Build

A rubber-sealing boot is installed on the brake to provide additional protection in dusty environments. This feature includes the stainless steel brake plate (RG).

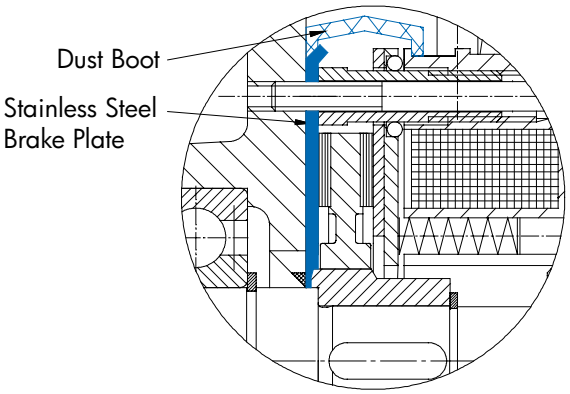


## IP66 Brake Enclosure (IP66)

Build

A sealed brake with IP66 enclosure protection can also be provided. This brake has a different mechanical housing that provides a higher degree of protection against severe environments.

## Brake Heating

Build

Brakes can be provided with a number of different heating systems. Contact NORD to discuss the details of your application




Send Quote Requests to info@automatedpt.com
Call +1(800)985-6929 To Order or Order Online At Nordgearmotors.com

Send Quote Requests to info@automatedpt.com Call +1(800)985-6929 To Order or Order Online At Nordgearmotors.com

# Options



## Quiet Brake Release (NRB1)

Build

To reduce the noise of the brake release, an o-ring can be placed between the brake coil body and the armature plate (stationary disc). The o-ring dampens the impact caused by the armature plate hitting the brake coil body during the release process. When ordering NRB1, the SR (Dust Boot) option is required. The SR option also includes the RG stainless steel corrosion plate.

## Quiet Brake Motor Operation (NRB2)

Build

Noise due to vibration in the brake components is possible during motor operation particularly with variable frequency drive or single phase motor operation. To reduce this vibration the brake can be constructed with an o-ring between the brake carrier hub and the armature plate. This o-ring will prevent the clattering caused by the rapid micro speed changes in the motor caused by inverter or single phase operation.

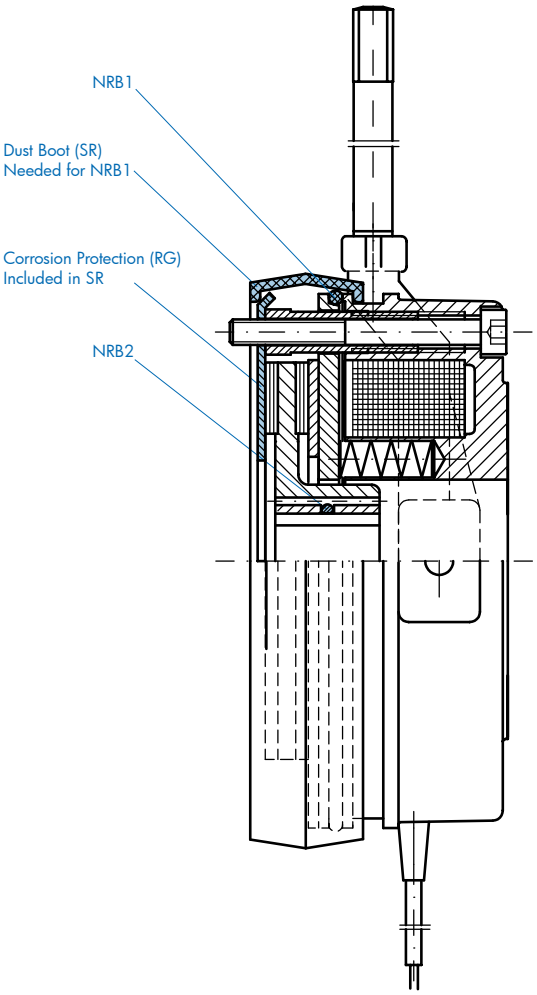


## Micro Switch (MIK)

Build

The micro switch monitors the release state of the brake and can be wired into external control circuitry to provide additional safety. The switch can also be used to detect certain brake service problems including excessive brake wear.

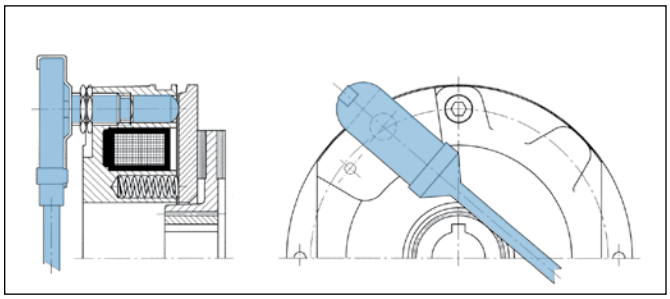

## Brass Foil (FBR)

Build

NORD brakes can be fitted with a brass foil in between the armature plate and the brake coil body. The foil acts as a magnetic resistance to weaken the brake coil's magnetic attraction to the armature plate. The weaker magnetic attraction between the armature plate and the brake coil will provide faster brake reaction (stopping) times. The brake release (start) times will be increased. The brass foil is normally used in combination with the fast GP rectifiers in over excitation mode.

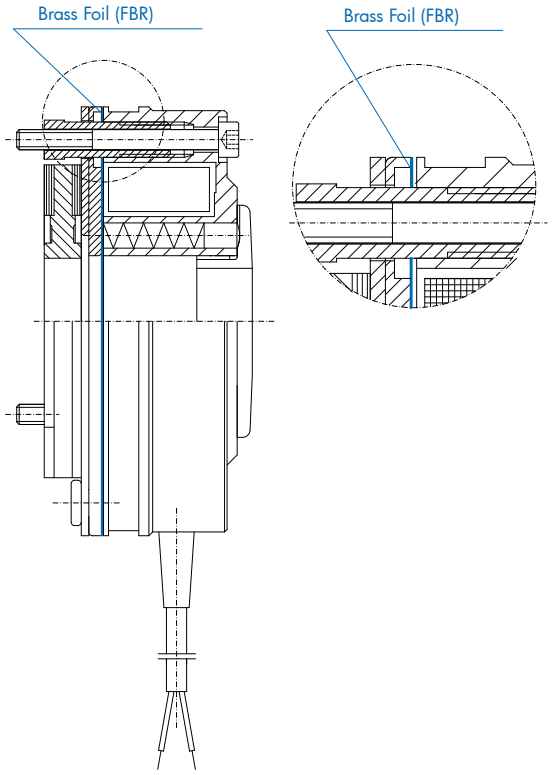


BRAKES


Send Quote Requests to info@automatedpt.com
Call +1(800)985-6929 To Order or Order Online At Nordgearmotors.com



# Options

## Current Sensing Relay (IR)

Mod

The current sensing relay, is used to achieve a fast brake engagement (stopping) without the use of external control equipment or additional wiring. The relay is mounted directly on the conduit box, and is powered from the motor's terminal block. The power leads for the relay replace one of the brass jumper bars on the terminal block of any single speed motor. The switch leads are connected to terminals 3 and 4 of the rectifier. When the power to the motor is shut off, the IR relay opens the brake circuit on the DC side which allows the brake to de-magnetize quickly.

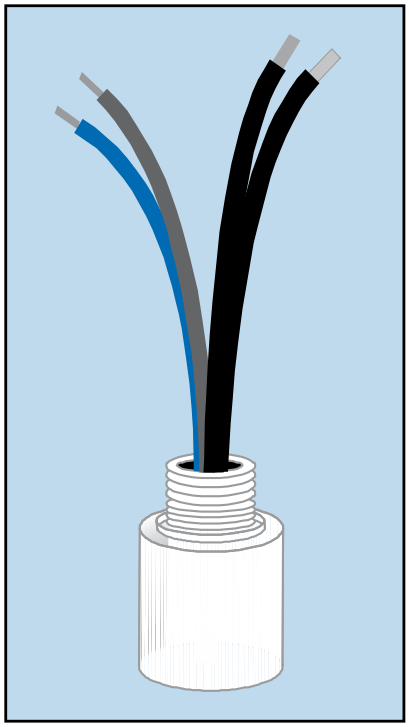

**CAUTIONS**

**Requirements**

- Brake must be powered from the motor's terminal block (not seperately powered)
- Motor must be a single speed and should not be powered by a frequency inverter or soft starter.

## Ratings

| Part number | 18556010 | 18556020 |
|---|---|---|
| Motor Frame Sizes | *63S - 180M | 180L - 225M |
| AC Input Current - black/white wires | 25AAC 75 AAC - 0.2 s | 50 AAC 75 AAC - 0.2 s |
| DC Brake Current - red/blue wires | 2.0 ADC | 2.0 ADC |
| Additional Brake Setting Delay | 18 ms | 18 ms |
| Ambient Temperature | - 40 to 75 °C - 40 to 167 °F | - 40 to 75 °C - 40 to 167 °F |
| Enclosure Rating | IP65 | IP65 |

* For 180MX motor frame at 230/460V use part number 18556020

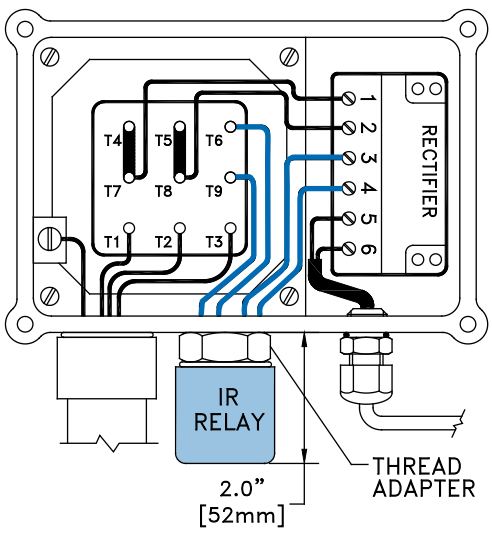


## Connection Notes

| Rectifier | | | IR-Relay Wires to Rectifier | |
|---|---|---|---|---|
| Model Type | Part Number | Design | Red | Blue |
| GVE20L | 19141000 | Full-wave | 3 | 4 |
| GHE40L | 19141010 | Half-wave | 4 | 3 |
| GHE50L | 19141020 | Half-wave | 4 | 3 |
| GPE20L | 19140230 | Push-hybrid | 4 | 3 |
| GPE40L | 19140240 | Push-hybrid | 4 | 3 |

## Conduit Box Thread Adapter

| Thread | Motor Frame | Part Number | O-Ring |
|---|---|---|---|
| M20 | 63-71 | 18542006 | 25501615 |
| M25 | 80-90 | 18522253 | 25501615 |
| M32 | 100-132 | 18522320 | 25501615 |
| M40 | 160-180 | 18522400 & 18522253 | 25501615 |

BRAKES


Send Quote Requests to info@automatedpt.com
Call +1(800)985-6929 To Order or Order Online At Nordgearmotors.com

# Options



## Double Brakes (DBR)

Build

Some applications require two independent brakes to meet industry safety guidelines.

## Double Brakes for Theatrical Applications

Many international standards for braking systems used on theatre hoists mandate the use of brakes that automatically set when power is removed. Redundancy is also required with the system brakes. If one brake fails, the other brake can still operate the system by running independently and parallel to each other. NORD DBR (2xBRE) brake systems are designed to meet these requirements. The NORD double brakes are also designed for quiet operation < 50dB(A).

Some safety standards require that the load brake hold 1.25 times the rated load at test. We recommend selecting the brake for approximately 1.6 to a maximum of 2.0 times the required operating torque for each brake.

The NORD double theatre brakes do not need to be worn-in and will achieve their full braking toque initially.

Two brake rectifiers are required for operating a double brake systems. These will be provided as loose parts and are normally mounted in the customers control panel.

The double brake option will add motor length compared to the single brake.

**CAUTIONS**

- NORD recommends delayed operation of one of the brakes. If the brakes are operated simultaneously, the combined torques may result in excessive torque for the gear unit or other mechanical system elements. If the brakes are set at the same time even in an E-stop condition, the gear units must be sized to handle this increased torque.

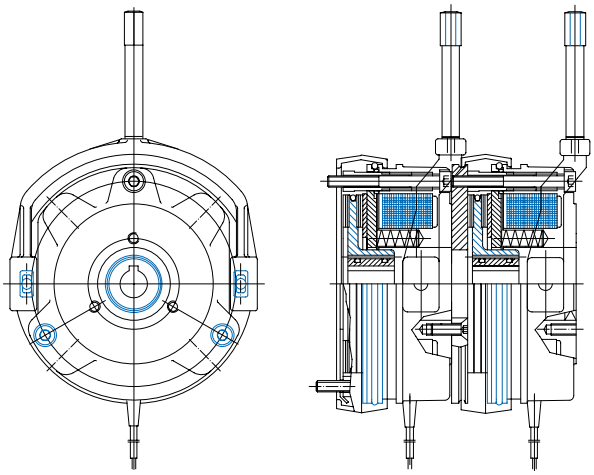

BRAKES

| Motor | Brake | 7 Springs | | 5 Springs | | 4 Springs | |
|---|---|---|---|---|---|---|---|
| | | [Nm] | [lb-ft] | [Nm] | [lb-ft] | [Nm] | [lb-ft] |
| 63S/L | DBR6 | 2 x 6 | 2 x 4.4 | 2 x 4 | 2 x 3 | 2 x 3.5 | 2 x 2.6 |
| 71S/L | DBR6 | 2 x 6 | 2 x 4.4 | 2 x 4 | 2 x 3 | 2 x 3.5 | 2 x 2.6 |
| 80S | DBR6 | 2 x 6 | 2 x 4.4 | 2 x 4 | 2 x 3 | 2 x 3.5 | 2 x 2.6 |
| 80L | DBR12 | 2 x 12.5 | 2 x 9.2 | 2 x 8.5 | 2 x 6.3 | 2 x 7 | 2 x 5.2 |
| 90S | DBR12 | 2 x 12.5 | 2 x 9.2 | 2 x 8.5 | 2 x 6.3 | 2 x 7 | 2 x 5.2 |
| 90L | DBR25 | 2 x 25 | 2 x 18.4 | 2 x 17.5 | 2 x 12.9 | 2 x 14 | 2 x 10.3 |
| 100L | DBR25 | 2 x 25 | 2 x 18.4 | 2 x 17.5 | 2 x 12.9 | 2 x 14 | 2 x 10.3 |
| 100LA/4 | DBR50 | 2 x 50 | 2 x 37 | 2 x 35 | 2 x 26 | 2 x 28 | 2 x 20.7 |
| 112M | DBR50 | 2 x 50 | 2 x 37 | 2 x 35 | 2 x 26 | 2 x 28 | 2 x 20.7 |
| 132S | DBR75 | 2 x 75 | 2 x 55 | 2 x 52 | 2 x 38 | 2 x 42 | 2 x 31 |
| 132M | DBR125 | 2 x 125 | 2 x 92 | 2 x 89 | 2 x 66 | 2 x 70 | 2 x 52 |
| 160M | DBR187 | 2 x 187 | 2 x 138 | 2 x 132 | 2 x 97 | 2 x 107 | 2 x 79 |
| 160L | DBR187 | 2 x 187 | 2 x 138 | 2 x 132 | 2 x 97 | 2 x 107 | 2 x 79 |
| 180MX/LX | DBR300 | 2 x 300 | 2 x 221 | 2 x 225 | 2 x 166 | 2 x 150 | 2 x 111 |
| 200L | DBR500 | 2 x 500 | 2 x 369 | 2 x 375 | 2 x 277 | 2 x 250 | 2 x 184 |


Send Quote Requests to info@automatedpt.com
Call +1(800)985-6929 To Order or Order Online At Nordgearmotors.com

Send Quote Requests to info@automatedpt.com Call +1(800)985-6929 To Order or Order Online At Nordgearmotors.com





# Performance Data

## Brake Torque Selection

| Brake Size | | BRE5 | BRE10 | BRE20 | BRE40 | BRE60 | BRE100 | BRE150 | BRE250 | BRE400 | BRE800 |
|---|---|---|---|---|---|---|---|---|---|---|---|
| Brake torque $_{-max}$ | [lb-ft] | 3.7 | 7.4 | 15 | 30 | 44 | 74 | 110 | 185 | 295 | 590 |
| | [lb-in] | 44 | 89 | 177 | 354 | 531 | 885 | 1330 | 2200 | 3500 | 7100 |
| | [Nm] | 5 | 10 | 20 | 40 | 60 | 100 | 150 | 250 | 400 | 800 |
| Power coil $P_{20}$ | [W] | 22 | 28 | 39 | 42 | 50 | 75 | 76 | 100 | 140 | 140 |
| Nominal air gap | [in] | 0.008 | 0.008 | 0.008 | 0.012 | 0.012 | 0.016 | 0.020 | 0.020 | 0.020 | 0.023 |
| | [mm] | 0.2 | 0.2 | 0.2 | 0.3 | 0.3 | 0.4 | 0.5 | 0.5 | 0.5 | 0.6 |
| Maximum air gap (re-adjust) $a_{max}$ | [in] | 0.024 | 0.013 | n/a * | 0.035 | 0.039 | 0.043 | 0.043 | 0.047 | 0.047 | 0.047 |
| | [mm] | 0.6 | 0.8 | n/a * | 0.9 | 1.0 | 1.1 | 1.1 | 1.2 | 1.2 | 1.2 |
| Max brake pad wear - must be replaced | [in] | 0.118 | 0.118 | 0.039 | 0.118 | 0.138 | 0.138 | 0.138 | 0.138 | 0.138 | 0.138 |
| | [mm] | 3 | 3 | 1 | 3 | 3.5 | 3.5 | 3.5 | 3.5 | 3.5 | 3.5 |
| Minimum brake pad thickness | [in] | 0.177 | 0.217 | 0.295 | 0.374 | 0.453 | 0.492 | 0.571 | 0.571 | 0.650 | 0.650 |
| | [mm] | 4.5 | 5.5 | 7.5 | 9.5 | 11.5 | 12.5 | 14.5 | 14.5 | 16.5 | 16.5 |
| Max work per cycle $W_{rmax}$ | [Jx10$^3$] | 3 | 6 | 12 | 25 | 35 | 50 | 75 | 105 | 150 | 225 |
| Work until re-adjust $W_{rn}$ | [Jx10$^7$] | 5 | 12 | 20 | 35 | 60 | 125 | 200 | 340 | 420 | 420 |
| Heat load per cycle | [J/s] | 80 | 100 | 130 | 160 | 200 | 250 | 300 | 350 | 400 | 600 |
| Release time (start) $t_1$ | [ms] | 35 | 45 | 70 | 80 | 120 | 160 | 200 | 220 | 230 | 400 |
| Release time (start) $t_{1\text{-}OE}$ | [ms] | 15 | 15 | 28 | 28 | 75 | 110 | 110 | N/A | N/A | N/A |
| Setting time (stop) $t_{2\text{-}AC}$ | [ms] | 70 | 95 | 140 | 175 | 210 | 280 | 350 | 500 | 800 | 1000 |
| Setting time (stop) $t_{2\text{-}DC}$ | [ms] | 30 | 45 | 30 | 75 | 90 | 120 | 150 | 180 | 200 | 250 |
| Setting time (stop) $t_{2\text{-}DCRP}$ | [ms] | 5 | 6 | 11 | 12 | 12 | 13 | 17 | 24 | N/A | N/A |
| IR relay delay (stop) $t_{2\text{-}IR}$ | [ms] | 18 | 18 | 18 | 18 | 18 | 18 | 18 | 18 | 18 | N/A |
| Current – 250VDC coil | [A] | 0.09 | 0.11 | 0.16 | 0.18 | 0.19 | 0.31 | 0.31 | 0.4 | 0.6 | 0.6 |
| Current – 225VDC coil | [A] | 0.09 | 0.13 | 0.18 | 0.20 | 0.22 | 0.35 | 0.36 | 0.5 | 0.6 | 0.6 |
| Current – 205VDC coil | [A] | 0.11 | 0.13 | 0.22 | 0.24 | 0.28 | 0.44 | 0.45 | 0.5 | 0.7 | 0.7 |
| Current – 180VDC coil | [A] | 0.12 | 0.16 | 0.21 | 0.25 | 0.30 | 0.46 | 0.47 | 0.6 | 0.8 | 0.8 |
| Current – 105VDC coil | [A] | 0.21 | 0.32 | 0.36 | 0.46 | 0.60 | 0.88 | 0.89 | 1.1 | 1.3 | 1.3 |
| Current – 24VDC coil | [A] | 0.92 | 1.17 | 1.63 | 1.75 | 2.08 | 3.10 | 3.20 | 4.2 | 5.9 | 5.9 |



## Detailed Brake Performance Data

### Release times

$t_1$ – Brake release time - Standard
$t_{1\text{-}OE}$ – Brake release time – Overexcitation (GP)

### Set (stop) times

$t_{2\text{-}AC}$ – Brake set time – AC switching
$t_{2\text{-}DC}$ – Brake set time – DC switching
$t_{2\text{-}DCRP}$ – Brake set time – DC switching reduced power
$t_{2\text{-}IR}$ – Additional brake stopping of the IR relay

An increased air gap will alter the braking times.


Send Quote Requests to info@automatedpt.com
Call +1(800)985-6929 To Order or Order Online At Nordgearmotors.com

Send Quote Requests to info@automatedpt.com Call +1(800)985-6929 To Order or Order Online At Nordgearmotors.com

# Brake Calculations



## Brake Size Calculation

Torque and inertias below are based on the motor speed. Load side torques must always be divided by the gear reduction ratio. Inertias must be divided by the *square* of the gear ratio. You must also consider any external reduction ratio outside the gearbox.

### Selection for holding loads (static)

$$T_{req} = T_{stat} = T_{load} \times K$$

### Selection for stopping loads (static + dynamic)

$$\sum J = J_{motor} + \frac{J_{load}}{i^2}$$

Typically other inertias, like the gearbox, can be ignored.

$$T_{dyn} = \frac{\sum J \times n}{25.7 \times t_r}$$

$$T_{req} = (T_{dyn} \pm T_{load}) \times K$$

For driving loads use: $-T_{load}$
For overhauling loads use: $+T_{load}$

## Brake Work Verification

$$W = \frac{\sum J \times n^2}{5880} \times \frac{T_B}{T_B \pm T_{load}} \Rightarrow W \leq W_{max}$$

For driving loads use: $+T_{load}$
For overhauling loads use: $-T_{load}$

The permissible values for $W_{max}$ (Friction work) depend on the stopping frequency. See diagram at right.

In applications where the brake is operated frequently, two brake work values should be evaluated to ensure adequate brake life: the braking work compared to the braking frequency and the maximum work limit for a single operation, such as an E-stop. Reviewing these two values will help determine the optimal solution and ensure long brake life.

## Abbreviation Key

| | | |
|---|---|---|
| **c/h** | = | Number of brakes per hour |
| **J [lb-ft²]** | = | Inertia |
| **$J_{motor}$ [lb-ft²]** | = | Motor inertia |
| **i** | = | System reduction ratio |
| **K** | = | Safety factors. Based on application and according to industry rules and practices<br>Hoisting >2<br>Hoisting with people >2..3<br>Travel drives 0.5 to 1.5 |
| **$T_B$ [lb-in]** | = | Brake torque |
| **$T_{dyn}$ [lb-in]** | = | Dynamic torque |
| **$T_{req}$ [lb-in]** | = | Required brake torque |
| **$T_{load}$ [lb-in]** | = | Load torque |
| **$T_{stat}$ [lb-in]** | = | Static torque |
| **n [rpm]** | = | Motor speed |
| **$t_r$ [sec]** | = | Stopping time |
| **W [J]** | = | Brake work |
| **$W_{max}$ [J]** | = | Maximum brake work for one brake operations |

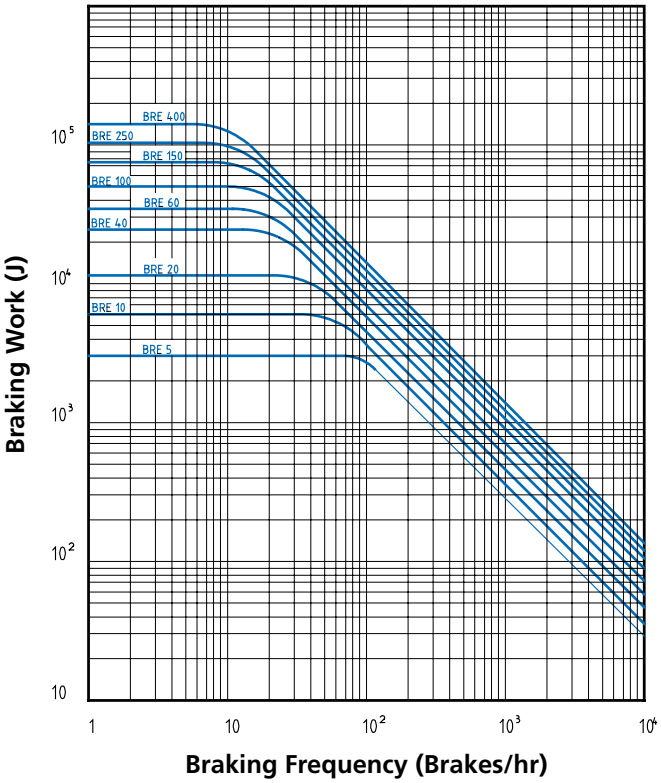


BRAKES


Send Quote Requests to info@automatedpt.com
Call +1(800)985-6929 To Order or Order Online At Nordgearmotors.com

Send Quote Requests to info@automatedpt.com
Call +1(800)985-6929 To Order or Order Online At Nordgearmotors.com



## Typical Connection Diagrams

230/460V, 60Hz, 3ø

**BR101** — 230/460V, 60Hz, 3ø BRAKE WITH STANDARD FULL–WAVE RECTIFIER — 10

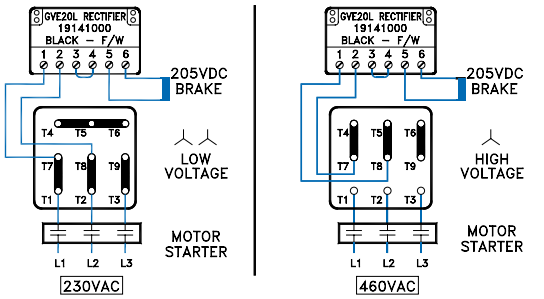


**BR102** — 230/460V, 60Hz, 3ø BRAKE WITH STANDARD FULL & HALF–WAVE RECTIFIER WIRED TO SEPARATE POWER SOURCE — 20

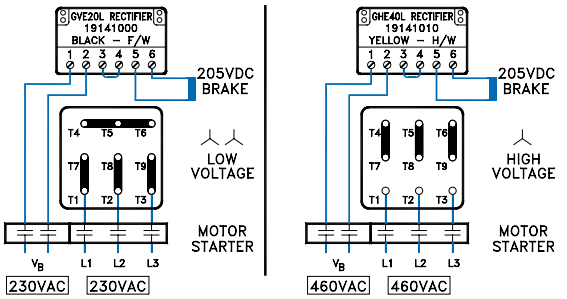


**BR103** — 230/460V, 60Hz, 3ø BRAKE WITH STANDARD FULL–WAVE RECTIFIER WIRED FOR DC SWITCHING — 15

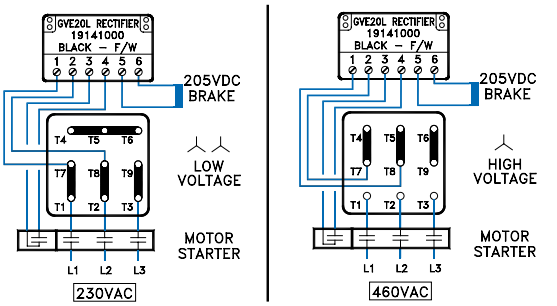


**BR104** — 230/460V, 60Hz, 3ø BRAKE WITH STANDARD FULL & HALF–WAVE RECTIFIER SEPARATE POWER SOURCE & DC SWITCHING — 25

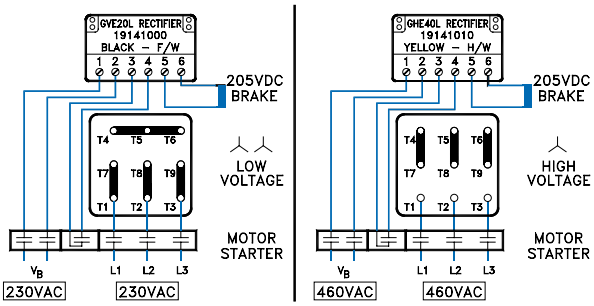


**BR201** — **FOR MOTOR FRAMES 160 & LARGER, A 9 POST "T" STYLE TERMINAL BLOCK WILL BE USED. THE T–BLOCK NUMBERING WILL BE THE SAME AS THE "SQUARE" STYLE SHOWN IN BR101 THRU BR104.

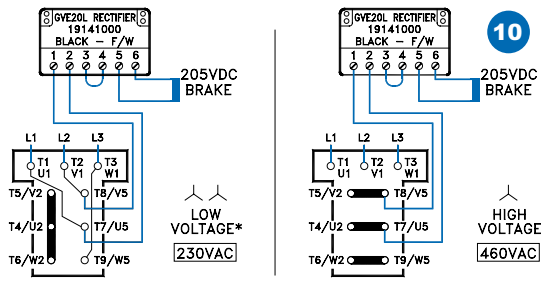


TYPICAL VIEW OF TERMINAL BOX WITH WIRING
("SQUARE" 9 POST TERMINAL)

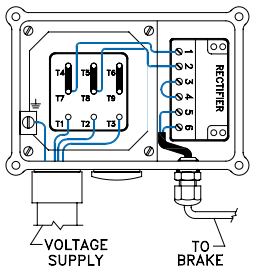


208/360V, 60Hz, 3ø

**BR301** — 208/360V, 60Hz, 3ø BRAKE WITH STANDARD FULL–WAVE RECTIFIER — 10

**BR302** — 208/360V, 60Hz, 3ø BRAKE WITH STANDARD FULL–WAVE RECTIFIER WIRED FOR DC SWITCHING — 15

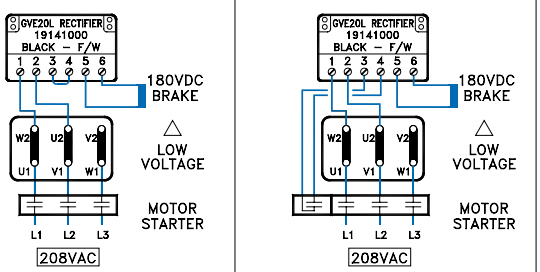


= Braking Method

BRAKES



Send Quote Requests to info@automatedpt.com
Call +1(800)985-6929 To Order or Order Online At Nordgearmotors.com

# Connections



## Typical Connection Diagrams

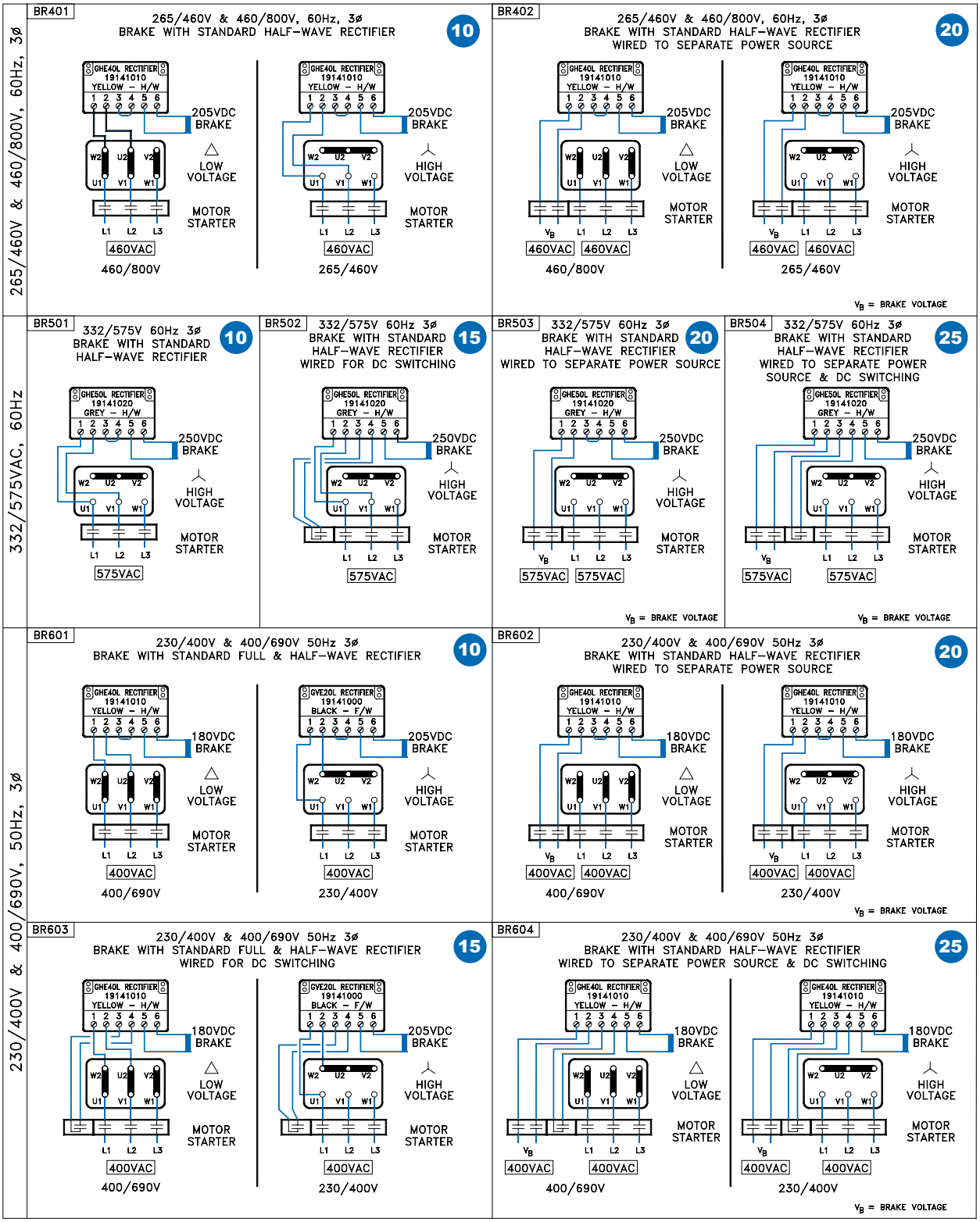


= Braking Method


Send Quote Requests to info@automatedpt.com
Call +1(800)985-6929 To Order or Order Online At Nordgearmotors.com



# Connections

## Inverter Driven Brakemotors

### Connection Guide for Brakes with AC-Switching

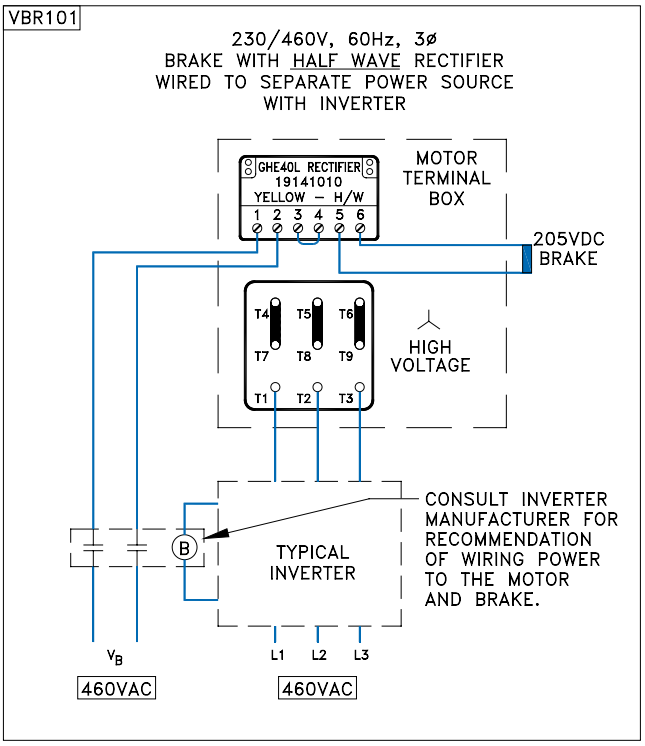


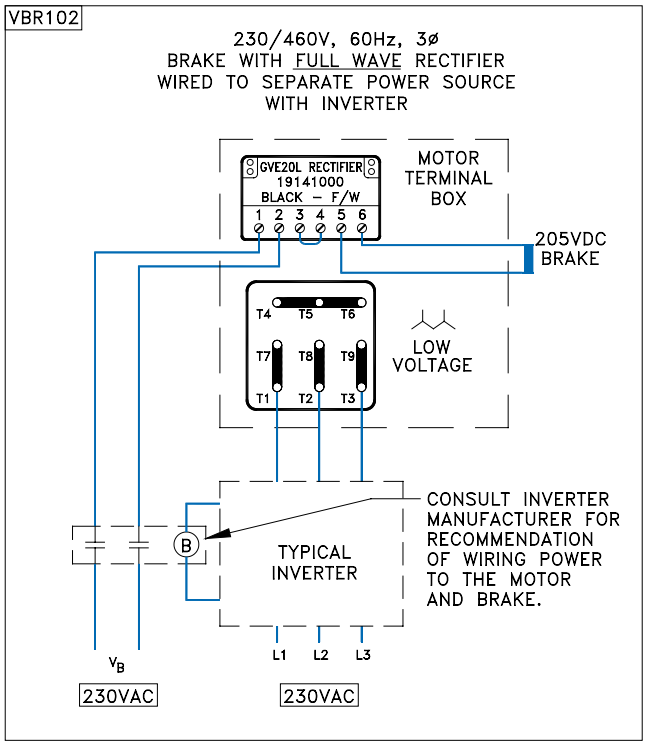


### Connection Guide for Brakes with DC-Switching

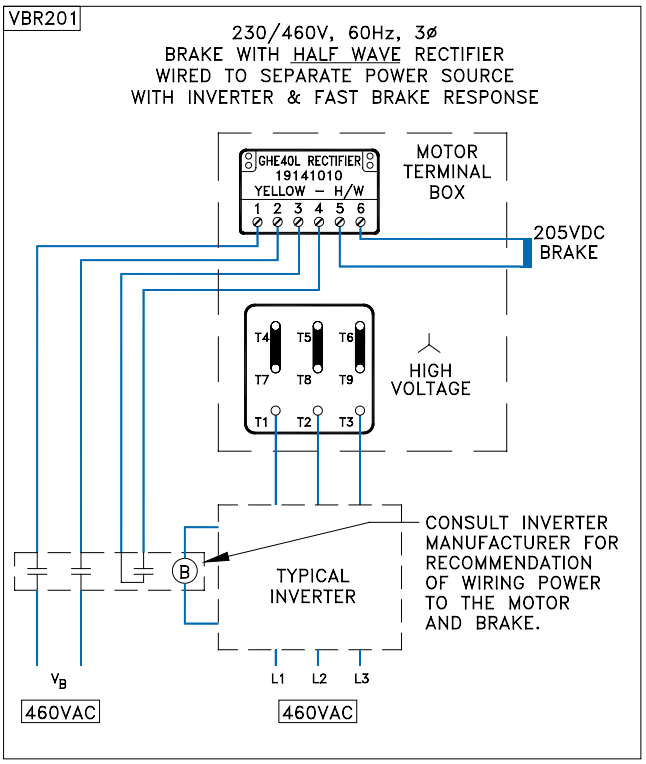


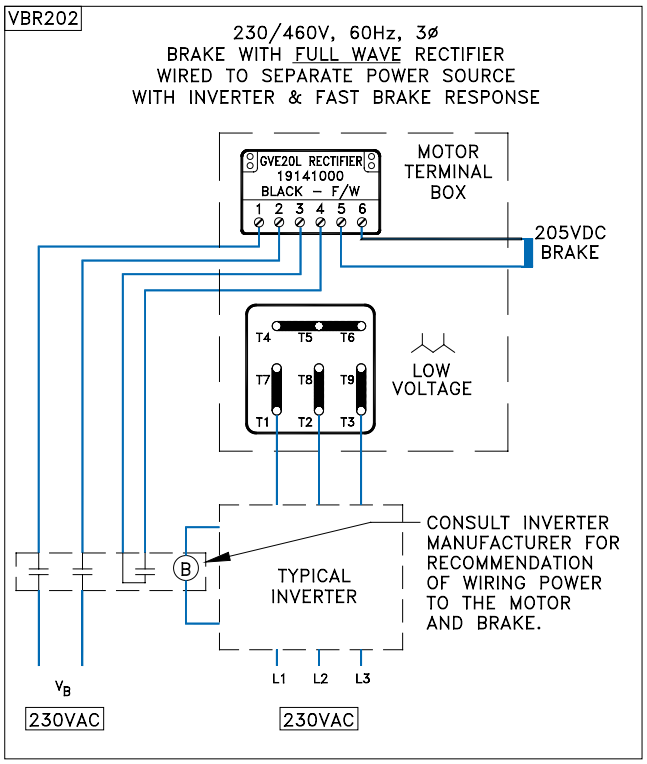





Send Quote Requests to info@automatedpt.com
Call +1(800)985-6929 To Order or Order Online At Nordgearmotors.com

# Connections



## GPE & GPU Rectifier - Connection Diagrams

### Motor Across the-Line Operation
### Brake Powered from the motor terminal block

**GP101** — **30**

START – FAST RELEASE (OVEREXCITATION)
STOP – NORMAL STOP (AC–SWITCHING)
BSG TYPE – EXTERNAL DC–SWITCHING
TERMINAL 3 & 4 – JUMPERED
$V_B$ = BRAKE VOLTAGE = 230V

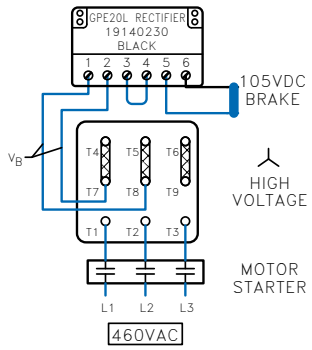


**GP102** — **35**

START – FAST RELEASE (OVEREXCITATION)
STOP – FAST STOP (DC–SWITCHING)
BSG TYPE – EXTERNAL DC–SWITCHING
TERMINAL 3 & 4 – CONTACT OR IR RELAY
$V_B$ = BRAKE VOLTAGE = 230V

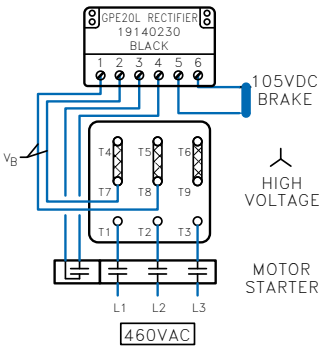


**GP103** — **40**

START – STANDARD RELEASE
STOP – VERY FAST STOP
(REDUCED POWER HOLD DC–SWITCHING)
BSG TYPE – EXTERNAL DC–SWITCHING
TERMINAL 3 & 4 – CONTACT OR IR RELAY
$V_B$ = BRAKE VOLTAGE = 230V

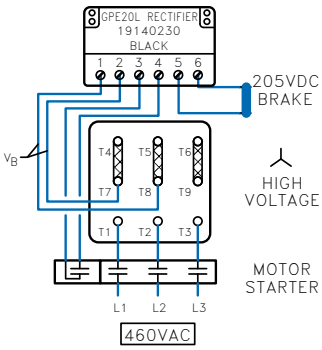


= Braking Method

### Power supplied from a seperate power source.
### Use with inverters, soft starters, and multi-speed motors

**GP104** — **45**

START – FAST RELEASE (OVEREXCITATION)
STOP – NORMAL STOP (AC–SWITCHING)
BSG TYPE – INTEGRATED DC–SWITCHING
TERMINAL 3 & 4 – JUMPERED

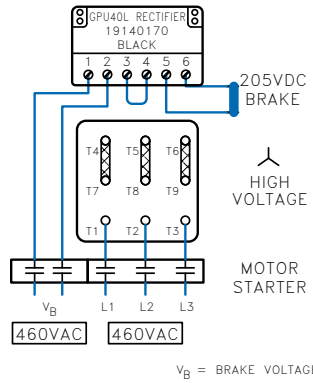


$V_B$ = BRAKE VOLTAGE

**GP105** — **50**

START – FAST RELEASE (OVEREXCITATION)
STOP – FAST STOP (DC–SWITCHING)
BSG TYPE – INTEGRATED DC–SWITCHING
TERMINAL 3 & 4 – NOT JUMPERED (OPEN)

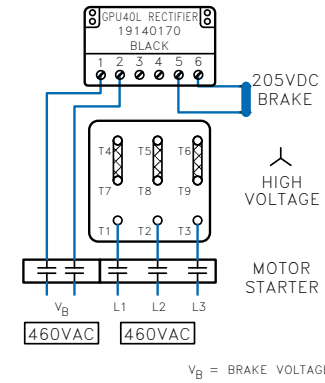


$V_B$ = BRAKE VOLTAGE

**GP106** — **55**

START – STANDARD RELEASE
STOP – VERY FAST STOP
(REDUCED POWER HOLD DC–SWITCHING)
BSG TYPE – INTEGRATED DC–SWITCHING
TERMINAL 3 & 4 – NOT JUMPERED (OPEN)

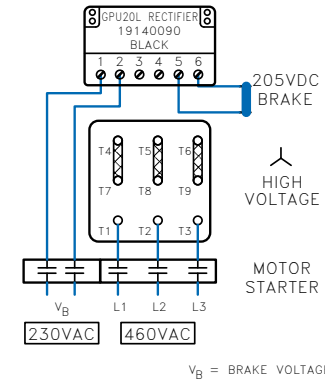


$V_B$ = BRAKE VOLTAGE

= Braking Method

BRAKES


Send Quote Requests to info@automatedpt.com
Call +1(800)985-6929 To Order or Order Online At Nordgearmotors.com



# Connections

## IR Relay Typical Connection Diagrams

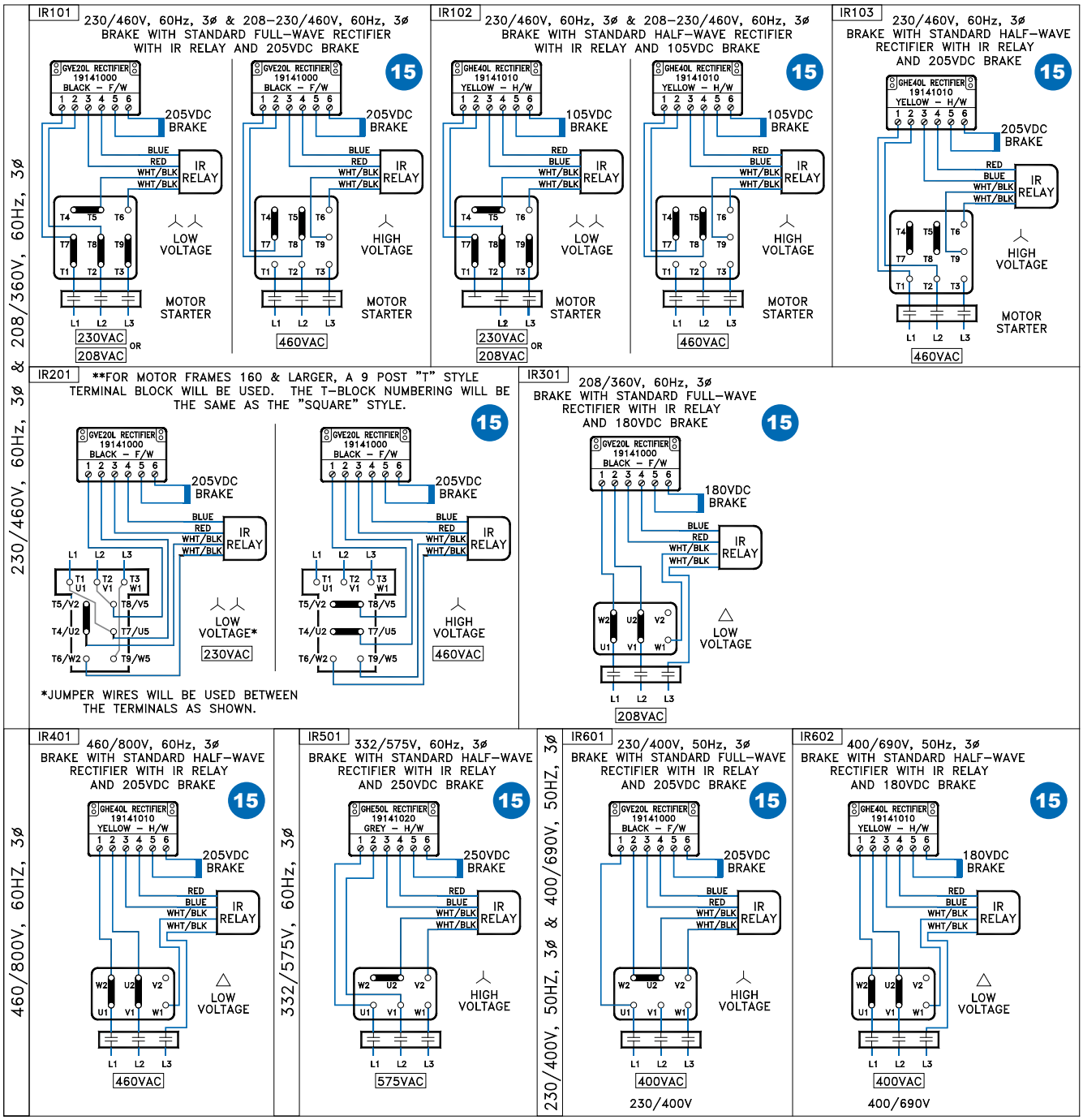


= Braking Method

## CAUTIONS

**Requirements**

- Brake must be powered from the motor's terminal block (not seperately powered)
- Motor must be a single speed and should not be powered by a frequency inverter or soft starter.

BRAKES


Send Quote Requests to info@automatedpt.com
Call +1(800)985-6929 To Order or Order Online At Nordgearmotors.com

# Connections



## GPE Rectifier for External DC-Switching with IR Relay

### Method Operation

Start - Fast release (Overexcitation)
Stop - Fast stop (DC-Switching)

GPE type - External DC-Switching
Terminal 3 & 4 - Contact or IR-relay

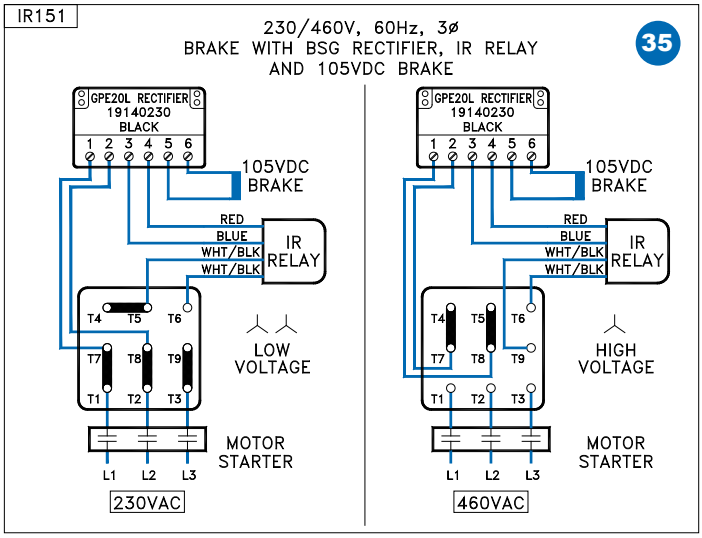


= Braking Method

### Method Operation

Start - Standard Release
Stop - Very Fast stop (Reduced power Hold)

GPE type - External DC-Switching
Terminal 3 & 4 - Contact or IR-relay

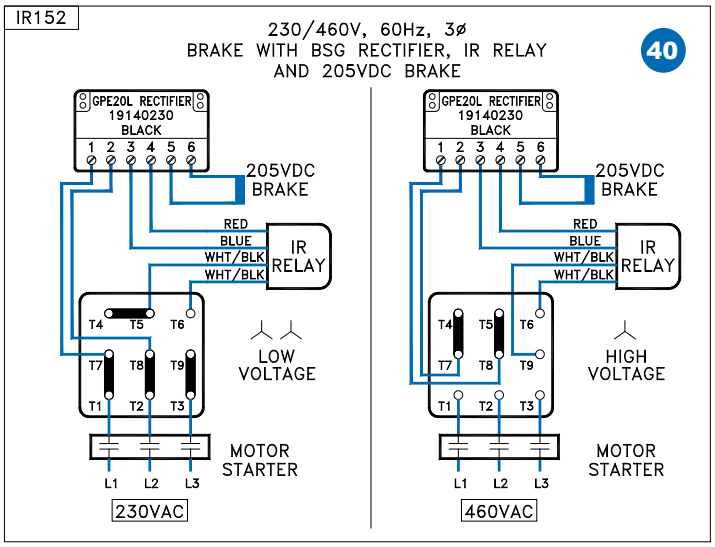


= Braking Method

BRAKES

**CAUTIONS**

**Requirements**

- Brake must be powered from the motor's terminal block (not seperately powered)
- Motor must be a single speed and should not be powered by a frequency inverter or soft starter.


Send Quote Requests to info@automatedpt.com
Call +1(800)985-6929 To Order or Order Online At Nordgearmotors.com

Send Quote Requests to info@automatedpt.com
Call +1(800)985-6929 To Order or Order Online At Nordgearmotors.com



# Service

- Oil Plugs
  - In-line
  - Clincher™
  - Helical-bevel
  - Helical-worm
- Parts Lists
  - In-line
  - Clincher
  - Helical-bevel
  - Helical-worm
  - Helical Input Stage
  - Motor
  - NEMA C-face
  - Solid Input Shaft - W

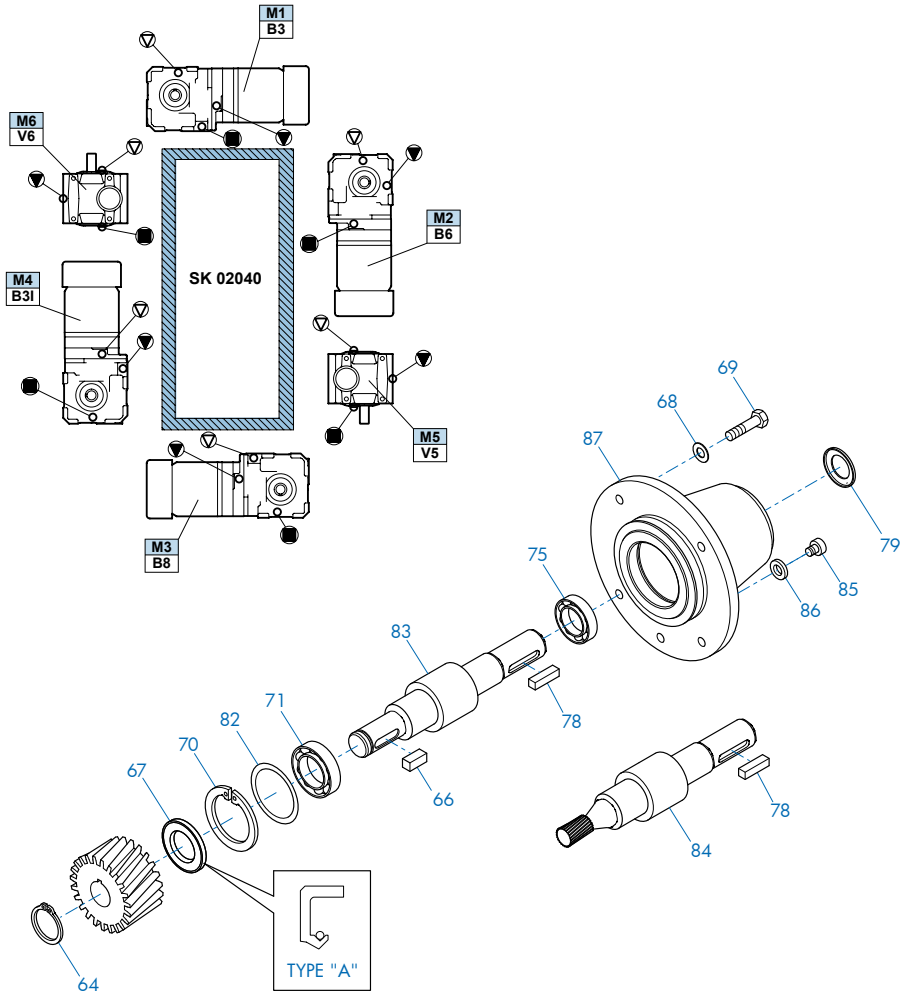


DRIVESYSTEMS

www.nord.com

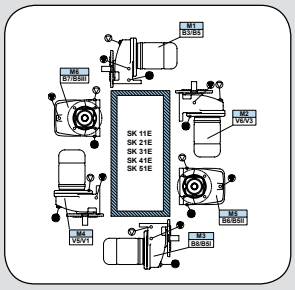

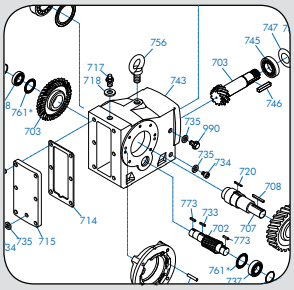

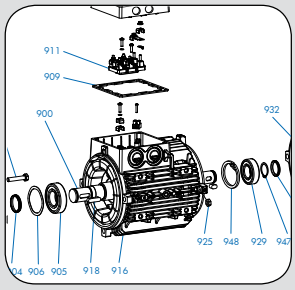

Send Quote Requests to info@automatedpt.com
Call +1(800)985-6929 To Order or Order Online At Nordgearmotors.com

Send Quote Requests to info@automatedpt.com
Call +1(800)985-6929 To Order or Order Online At Nordgearmotors.com

# Oil Plugs

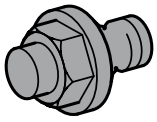

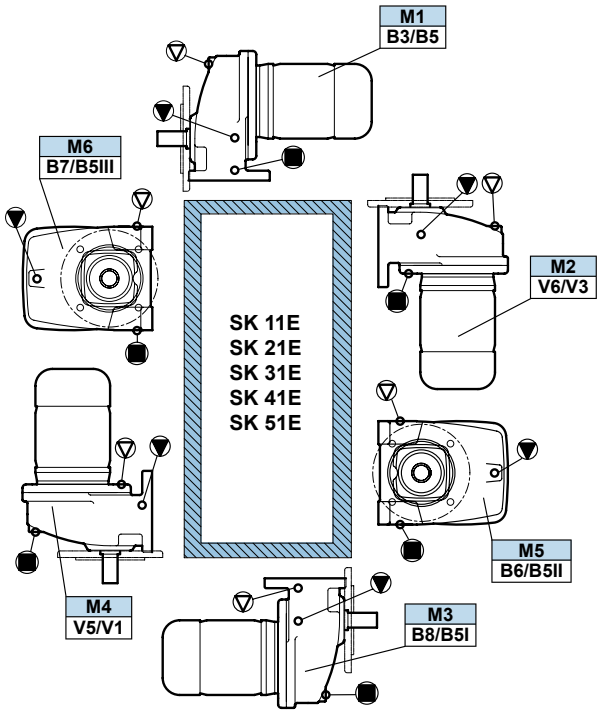


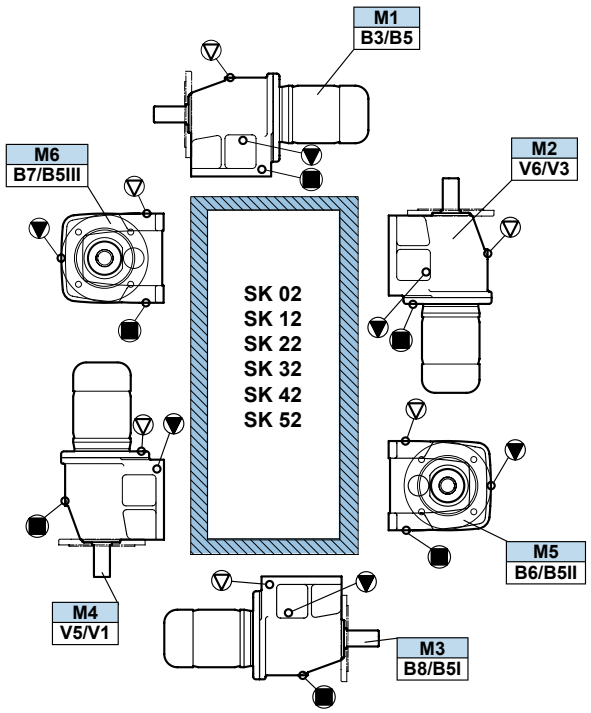


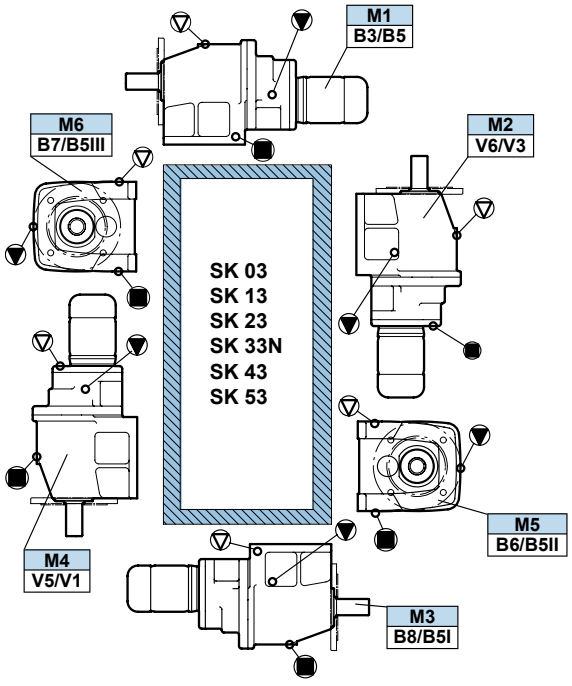


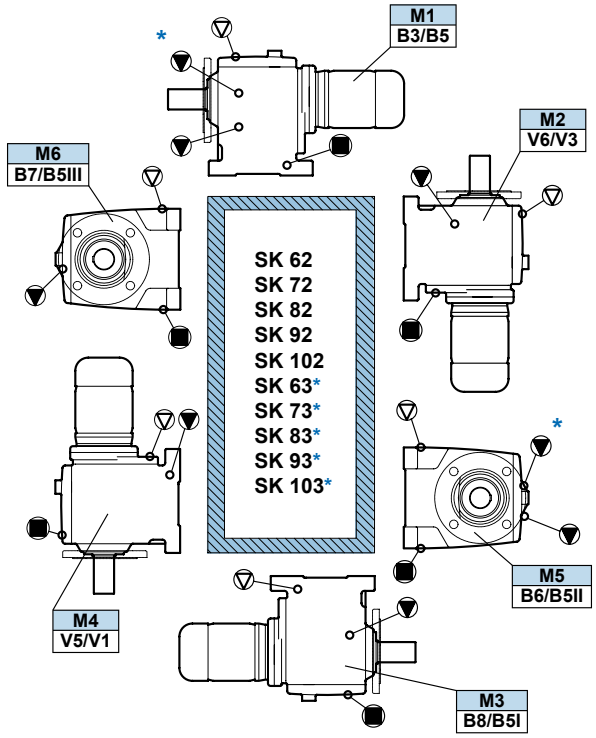


▽ = Vent ▼ = Oil Level ■ = Oil Drain

* Oil level for 3 stage units

SERVICE


Send Quote Requests to info@automatedpt.com
Call +1(800)985-6929 To Order or Order Online At Nordgearmotors.com

# Oil Plugs

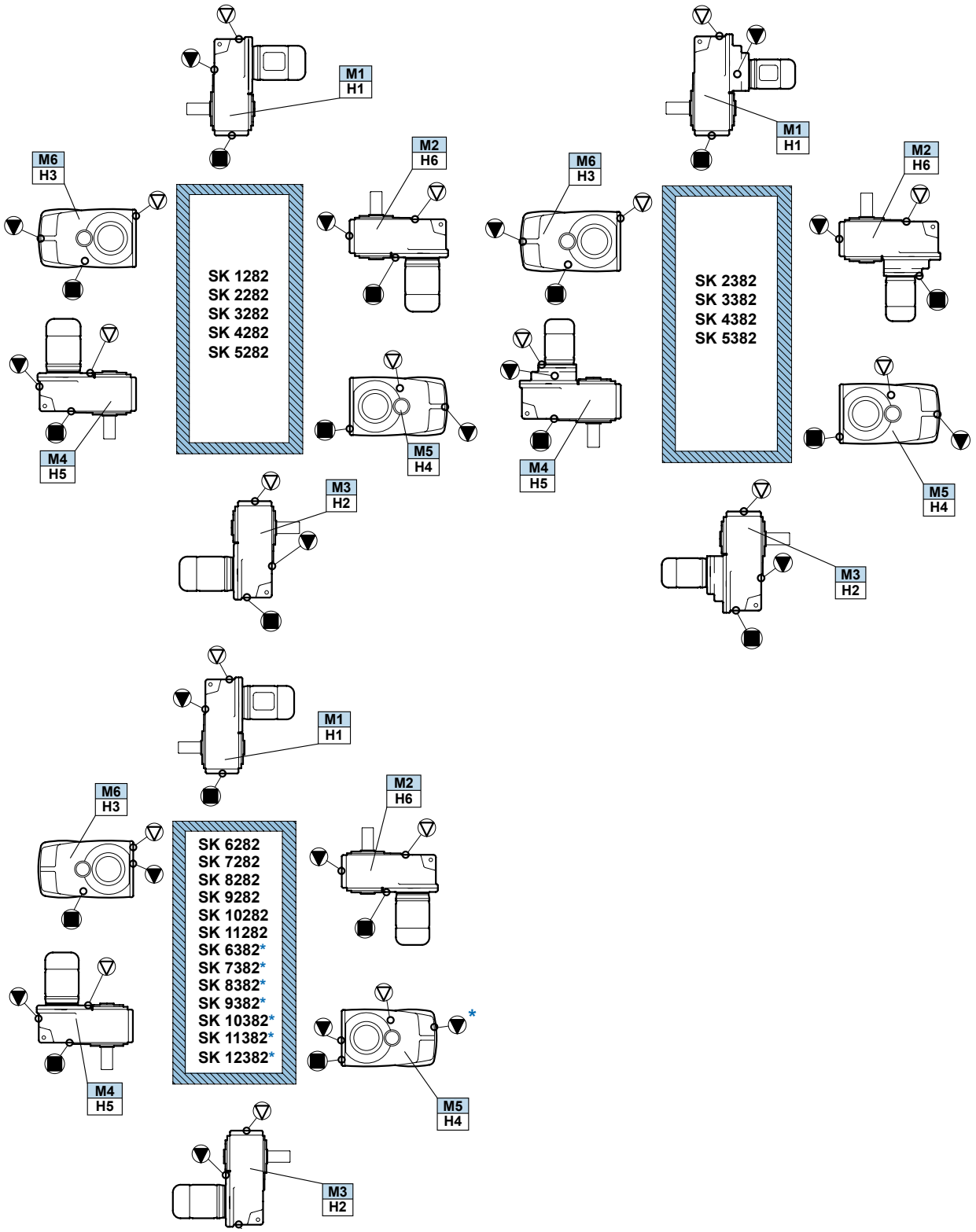


▽ = Vent ▼ = Oil Level ■ = Oil Drain

* Oil level for 3 stage units

✶ Oil level should be verified using the dip stick located in the oil tank for the M4/H5 position.

SERVICE


Send Quote Requests to info@automatedpt.com
Call +1(800)985-6929 To Order or Order Online At Nordgearmotors.com

Send Quote Requests to info@automatedpt.com
Call +1(800)985-6929 To Order or Order Online At Nordgearmotors.com

# Oil Plugs

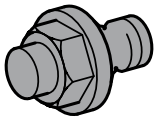

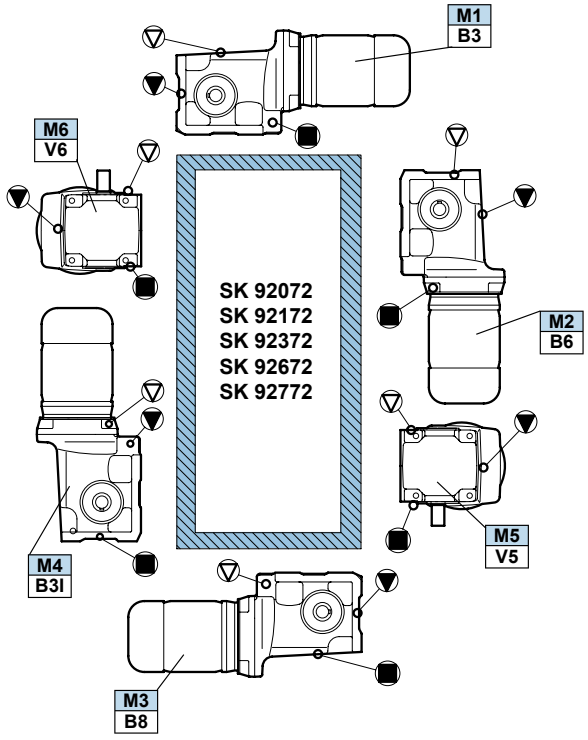


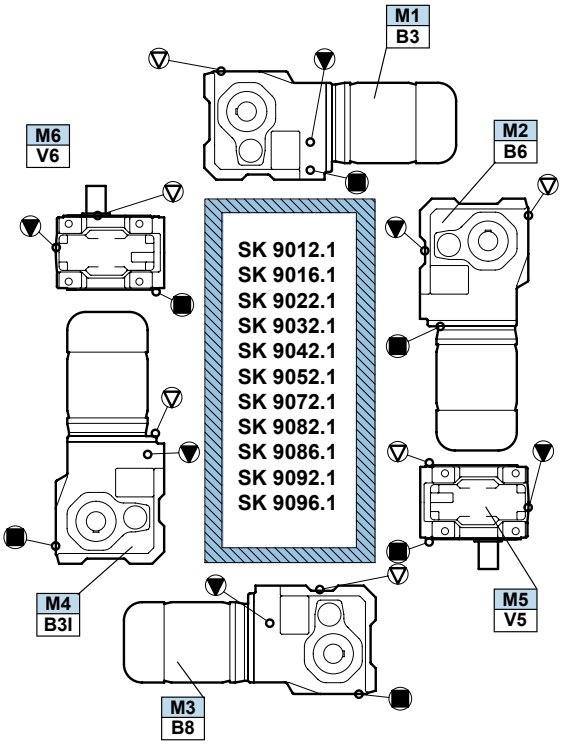


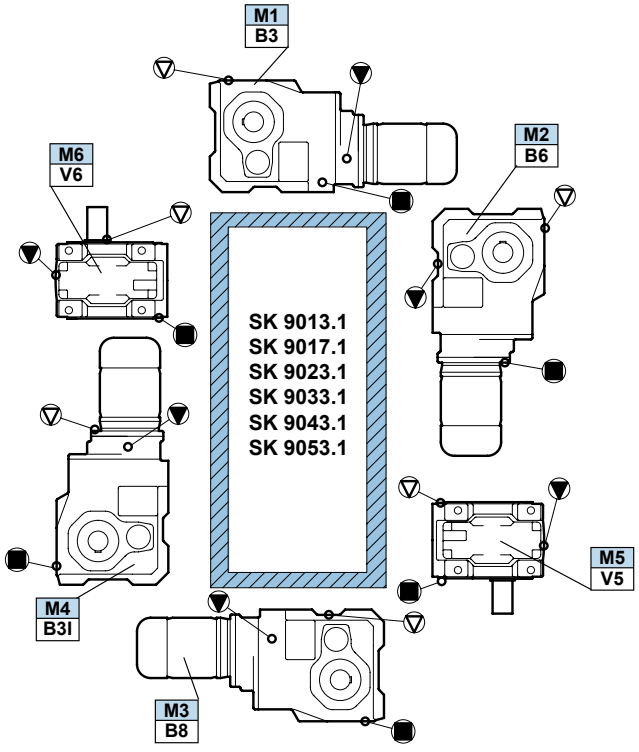


▽ = Vent ▼ = Oil Level ■ = Oil Drain

SERVICE


Send Quote Requests to info@automatedpt.com
Call +1(800)985-6929 To Order or Order Online At Nordgearmotors.com

Send Quote Requests to info@automatedpt.com
Call +1(800)985-6929 To Order or Order Online At Nordgearmotors.com



# Oil Plugs

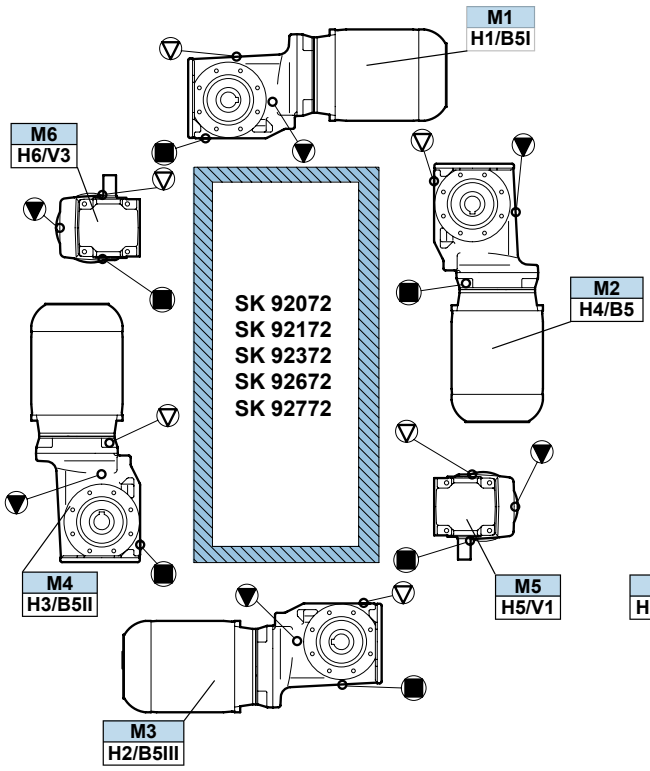


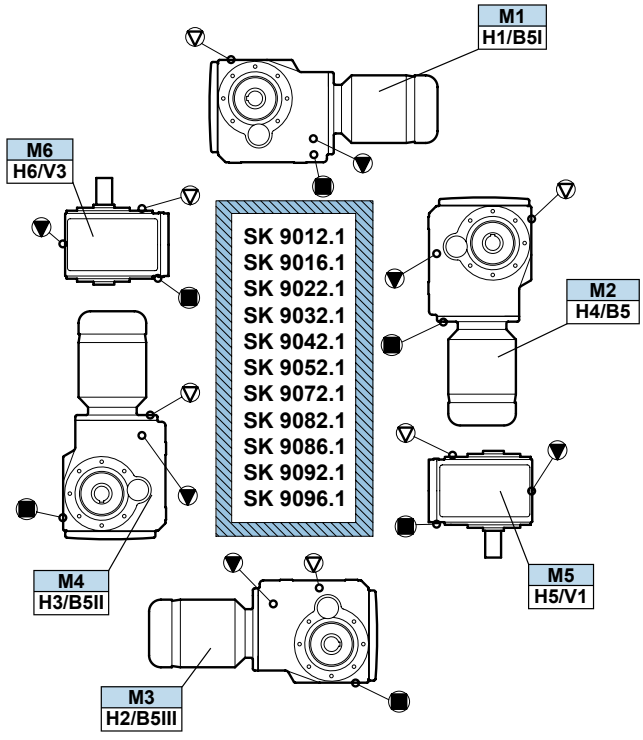


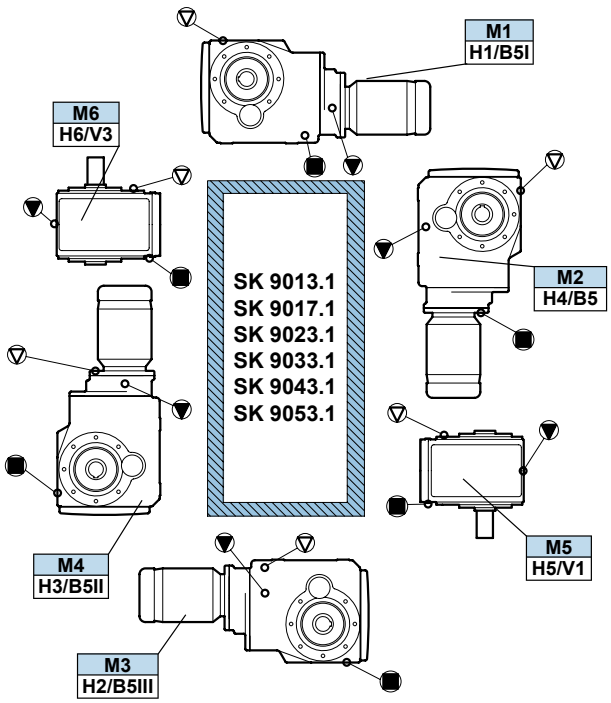


▽ = Vent ▼ = Oil Level ■ = Oil Drain

SERVICE


Send Quote Requests to info@automatedpt.com
Call +1(800)985-6929 To Order or Order Online At Nordgearmotors.com

# Oil Plugs

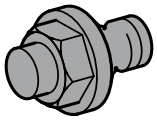

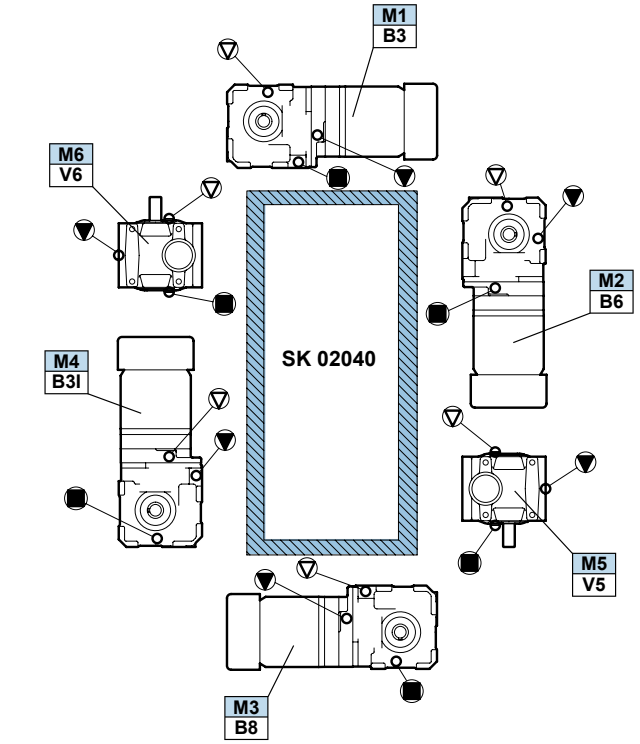


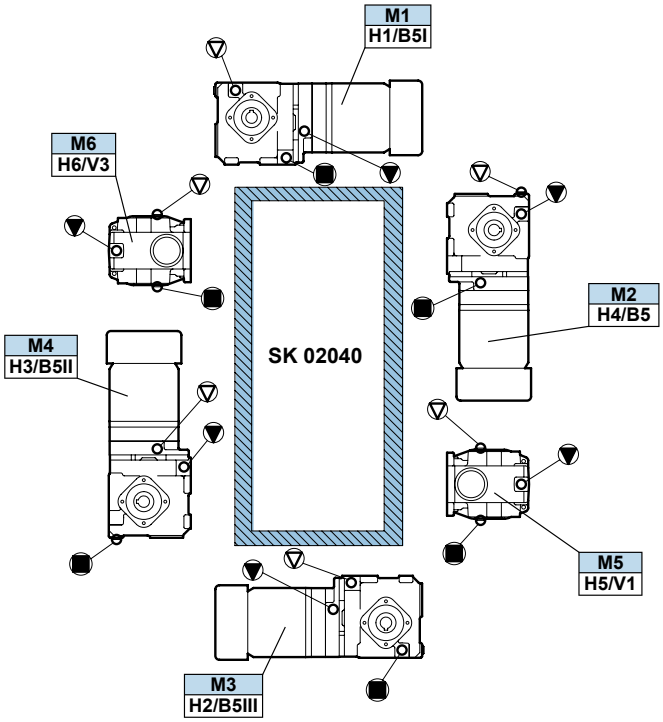


SERVICE

▽ = Vent ▼ = Oil Level ■ = Oil Drain


Send Quote Requests to info@automatedpt.com
Call +1(800)985-6929 To Order or Order Online At Nordgearmotors.com

Send Quote Requests to info@automatedpt.com
Call +1(800)985-6929 To Order or Order Online At Nordgearmotors.com



# Oil Plugs

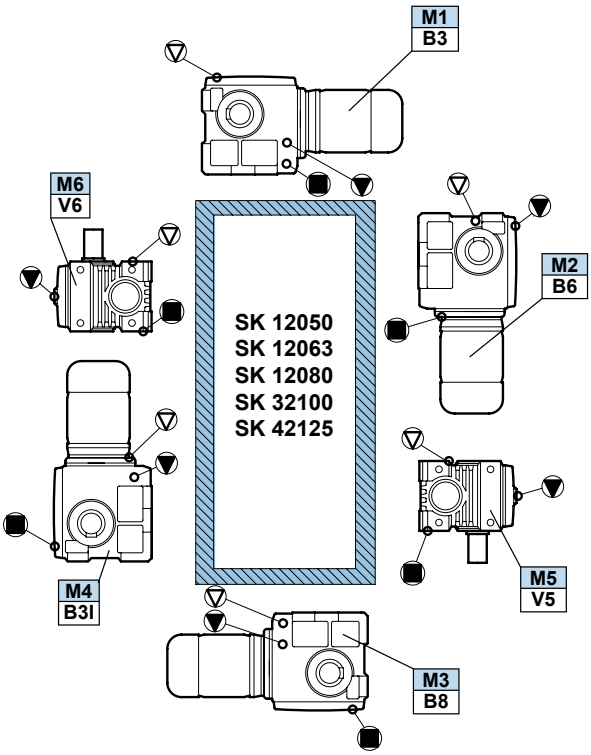


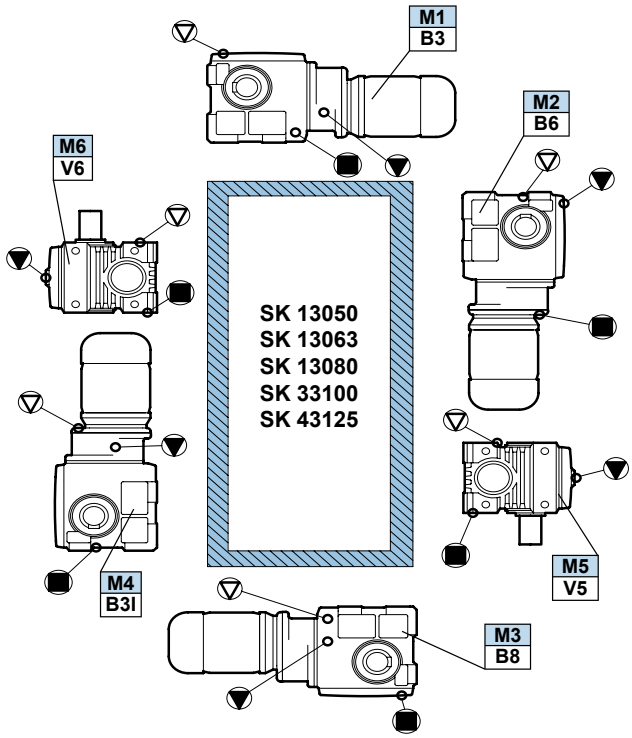


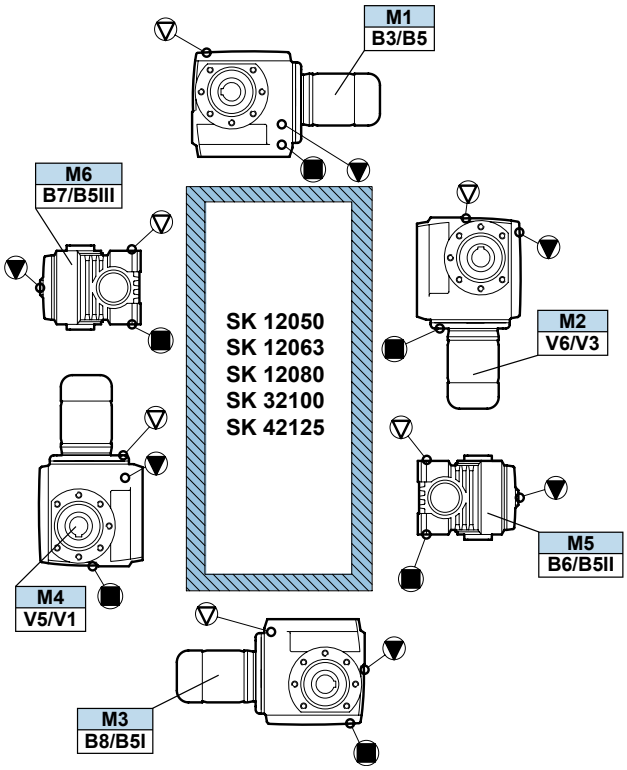


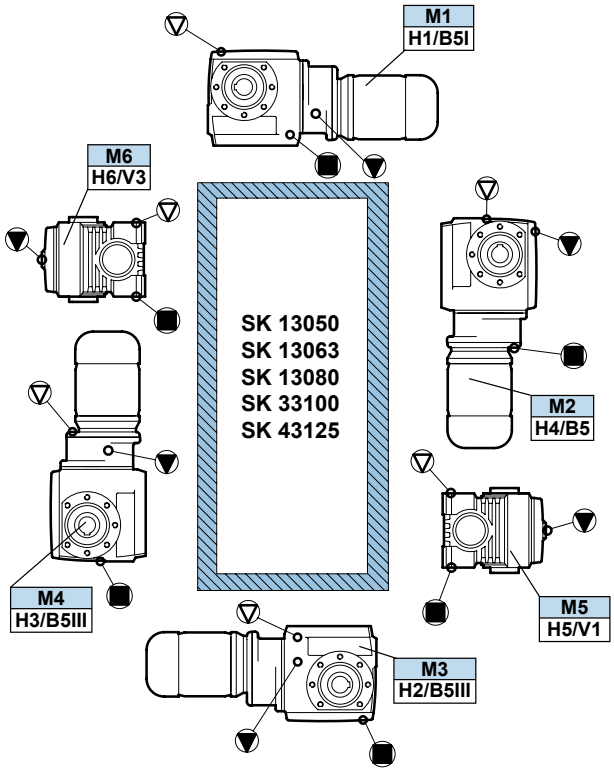


▽ = Vent ▼ = Oil Level ■ = Oil Drain

SERVICE


Send Quote Requests to info@automatedpt.com
Call +1(800)985-6929 To Order or Order Online At Nordgearmotors.com

Send Quote Requests to info@automatedpt.com
Call +1(800)985-6929 To Order or Order Online At Nordgearmotors.com

# Parts Lists

DRIVESYSTEMS

## In-line SK11E - SK51E Foot Mount

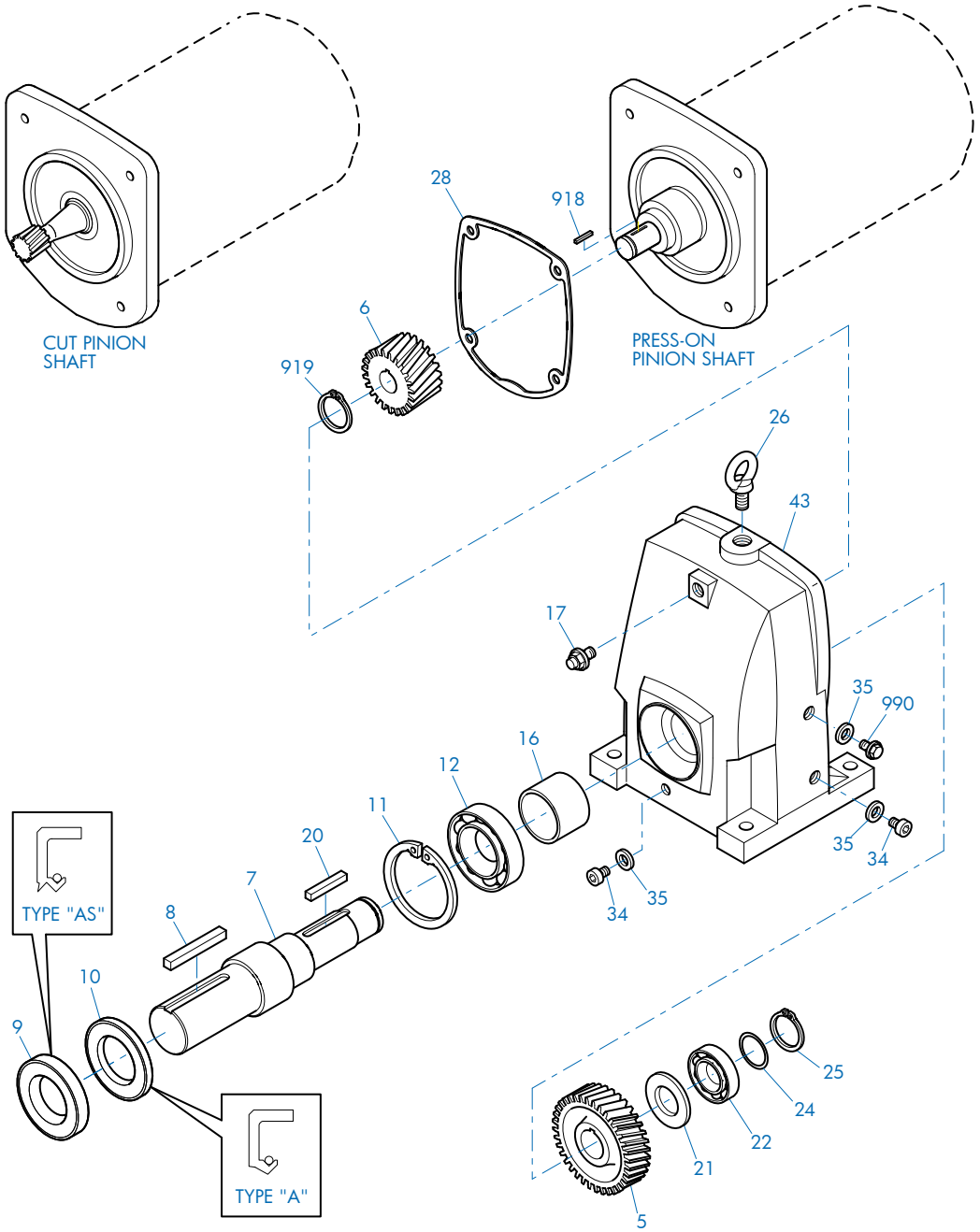


| | | | | | |
|---|---|---|---|---|---|
| 5 | Gear | 16 | Spacer | 26 | Flanged Eye Bolt |
| 6 | Pinion | 17 | Vent Plug | 28 | Gasket |
| 7 | Output Shaft | 18 | Seal | 34 | Drain Plug |
| 8 | Key | 20 | Key | 35 | Gasket |
| 9 | Oil Seal | 21 | Spacer | 43 | Gearcase |
| 10 | Oil Seal | 22 | Anti-Friction Bearing | 918 | Key |
| 11 | Snap Ring | 24 | Shim | 919 | Snap Ring |
| 12 | Anti-Friction Bearing | 25 | Snap Ring | 990 | Oil Level Plug |

SERVICE


Send Quote Requests to info@automatedpt.com
Call +1(800)985-6929 To Order or Order Online At Nordgearmotors.com

Send Quote Requests to info@automatedpt.com
Call +1(800)985-6929 To Order or Order Online At Nordgearmotors.com



## In-line SK02 - SK52 Foot Mount

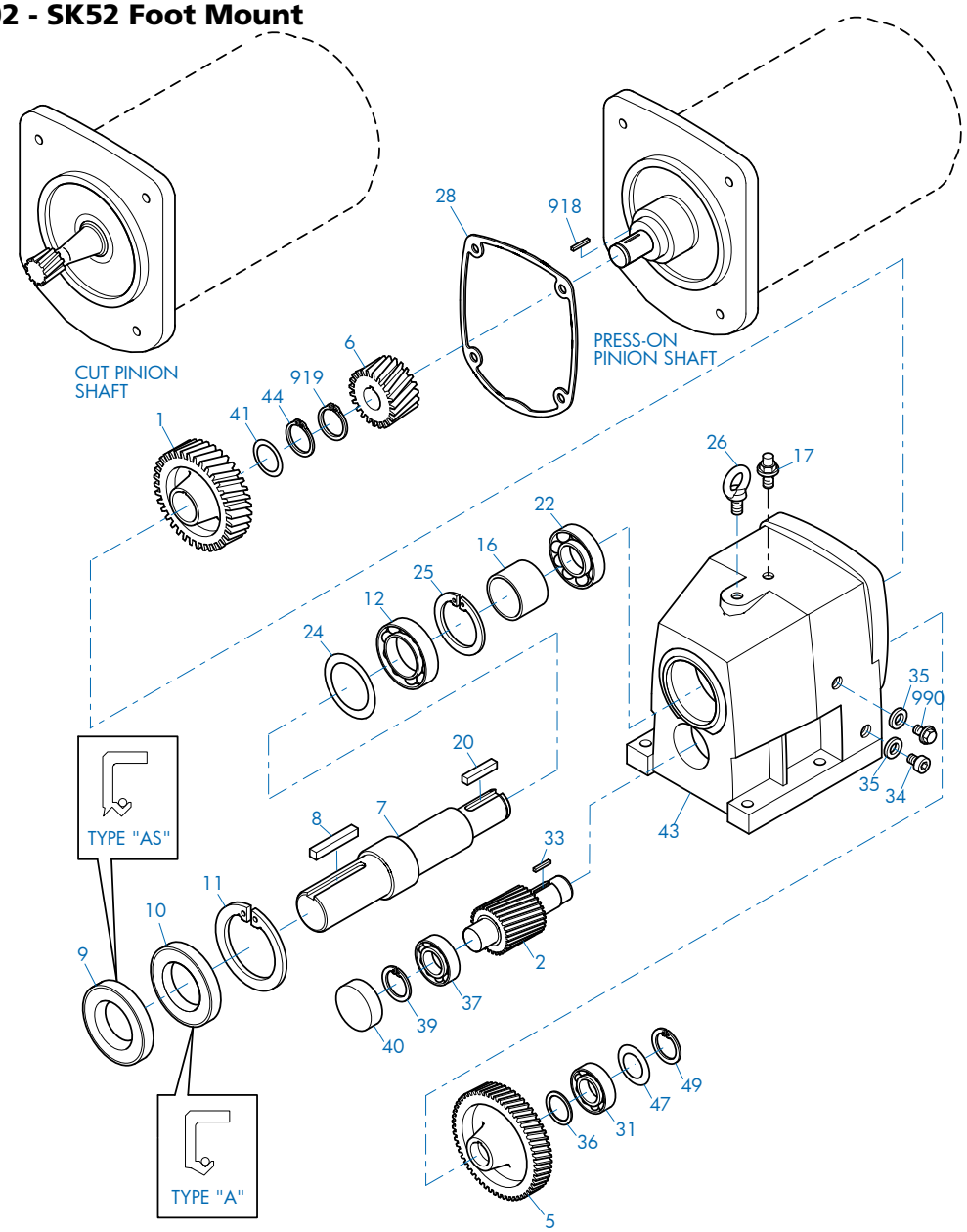


| | | | | | |
|---|---|---|---|---|---|
| 1 | Gear | 18 | Seal | 37 | Anti-Friction Bearing |
| 2 | Pinion Shaft | 20 | Key | 39 | Snap Ring |
| 5 | Gear | 22 | Anti-Friction Bearing | 40 | Bore Plug |
| 6 | Pinion | 23 | Thrust Washer | 41 | Shim |
| 7 | Output Shaft | 24 | Shim | 43 | Gearcase |
| 8 | Key | 25 | Snap Ring | 44 | Snap Ring |
| 9 | Oil Seal | 26 | Flanged Eye Bolt | 47 | Shim |
| 10 | Oil Seal | 28 | Gasket | 49 | Snap Ring |
| 11 | Snap Ring | 31 | Anti-Friction Bearing | 130 | Shim |
| 12 | Anti-Friction Bearing | 33 | Key | 918 | Key |
| 13 | NILOS Ring* | 34 | Drain Plug | 919 | Snap Ring |
| 16 | Spacer | 35 | Gasket | 990 | Oil Level Plug |
| 17 | Vent Plug | 36 | Spacer | | |

* Conditionally used part

SERVICE


Send Quote Requests to info@automatedpt.com
Call +1(800)985-6929 To Order or Order Online At Nordgearmotors.com

Send Quote Requests to info@automatedpt.com
Call +1(800)985-6929 To Order or Order Online At Nordgearmotors.com



## In-line SK62 - SK102 Foot Mount

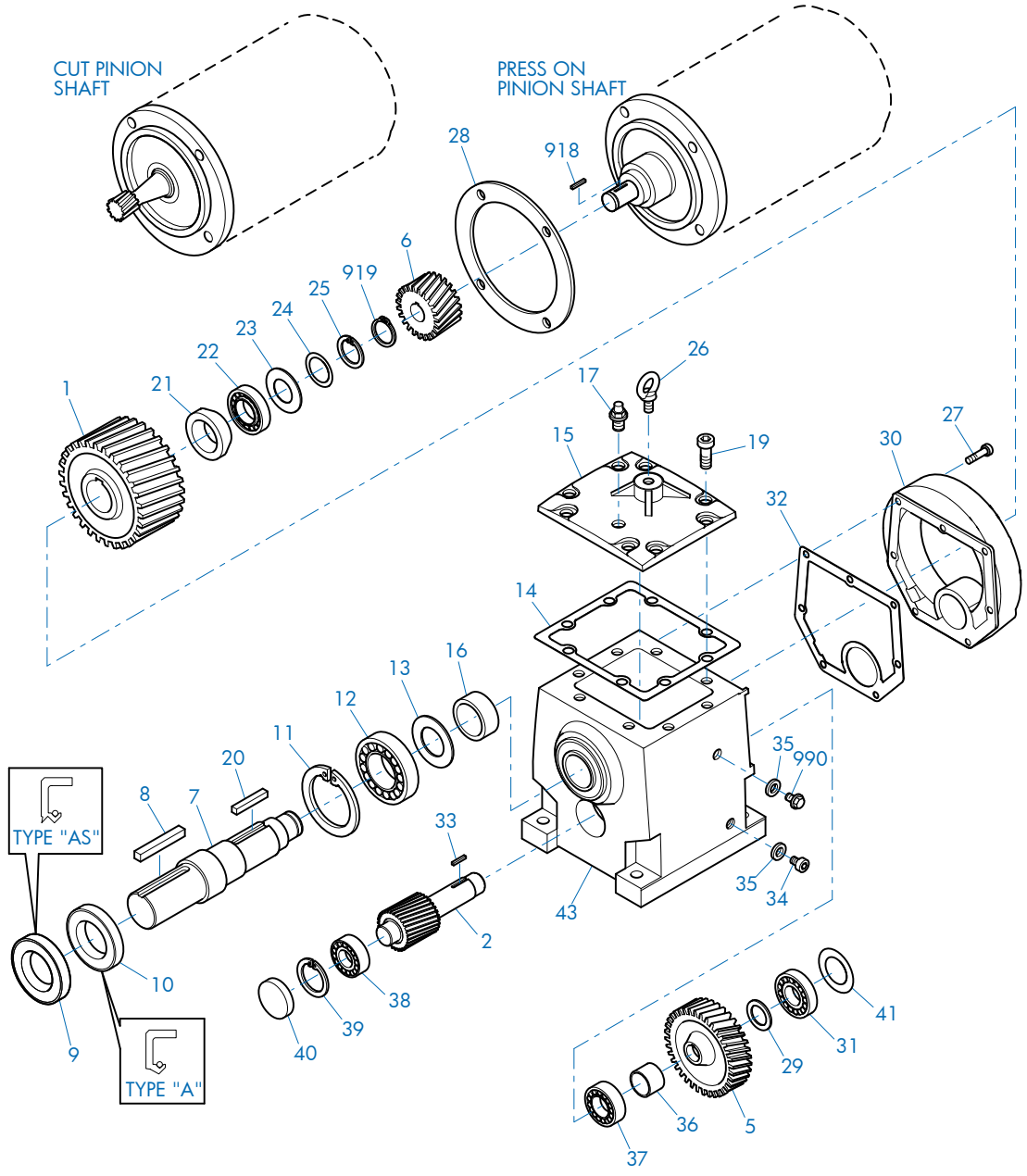


| | | | | | | | |
|---|---|---|---|---|---|---|---|
| 1 | Gear | 15 | Inspection Cover | 27 | Bolt | 39 | Snap Ring |
| 2 | Pinion Shaft | 16 | Spacer | 28 | Gasket | 40 | Bore Plug |
| 5 | Gear | 17 | Vent Plug | 29 | Spacer | 41 | Shim |
| 6 | Pinion | 18 | Seal | 30 | Input Cover | 42 | Thrust Washer |
| 7 | Output Shaft | 19 | Bolt | 31 | Anti-Friction Bearing | 43 | Gearcase |
| 8 | Key | 20 | Key | 32 | Gasket | 131 | NILOS Ring |
| 9 | Oil Seal | 21 | Spacer | 33 | Key | 132 | NILOS Ring |
| 10 | Oil Seal | 22 | Anti-Friction Bearing | 34 | Drain Plug | 918 | Key |
| 11 | Snap Ring | 23 | Thrust Washer | 35 | Gasket | 919 | Snap Ring |
| 12 | Anti-Friction Bearing | 24 | Shim | 36 | Spacer | 990 | Oil Level Plug |
| 13 | NILOS ring | 25 | Snap Ring | 37 | Anti-Friction Bearing | | |
| 14 | Gasket | 26 | Flanged Eye Bolt | 38 | Anti-Friction Bearing | | |

SERVICE


Send Quote Requests to info@automatedpt.com
Call +1(800)985-6929 To Order or Order Online At Nordgearmotors.com

Send Quote Requests to info@automatedpt.com
Call +1(800)985-6929 To Order or Order Online At Nordgearmotors.com



## In-line SK63 - SK103 Foot Mount

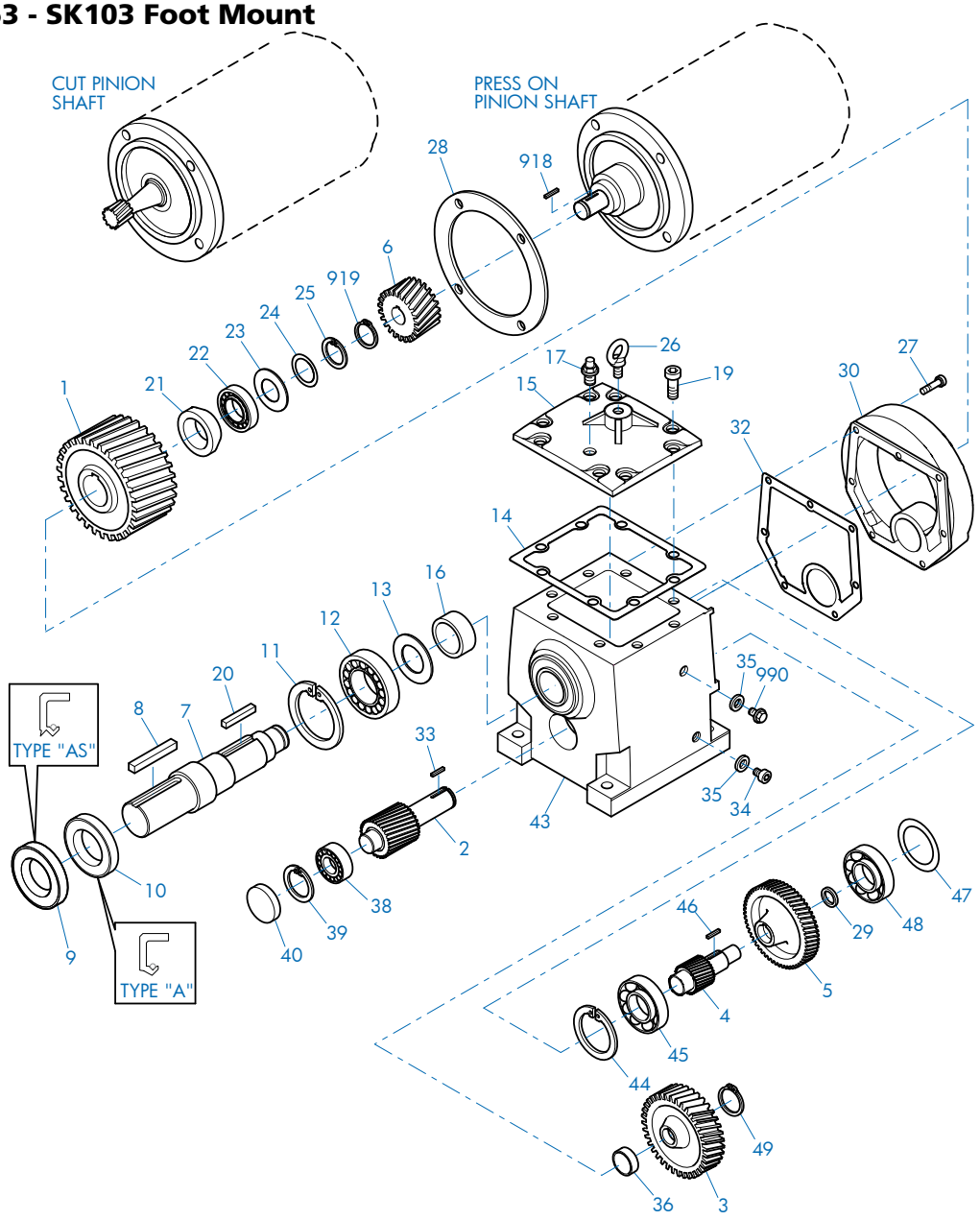


| | | | | | | | |
|---|---|---|---|---|---|---|---|
| 1 | Gear | 15 | Inspection Cover | 29 | Spacer | 45 | Anti-Friction Bearing |
| 2 | Pinion Shaft | 16 | Spacer | 30 | Input Cover | 46 | Key |
| 3 | Gear | 17 | Vent Plug | 32 | Gasket | 47 | Shim |
| 4 | Pinion Shaft | 18 | Seal | 33 | Key | 48 | Bearing |
| 5 | Gear | 19 | Bolt | 34 | Drain plug | 49 | Snap Ring |
| 6 | Pinion | 20 | Key | 35 | Gasket | 50 | Thrust Washer |
| 7 | Output Shaft | 21 | Spacer | 36 | Spacer | 51 | Snap Ring |
| 8 | Key | 22 | Anti-Friction Bearing | 37 | Anti-Friction Bearing | 131 | NILOS Ring |
| 9 | Oil Seal | 23 | Thrust Washer | 38 | Anti-Friction Bearing | 133 | NILOS Ring |
| 10 | Oil Seal | 24 | Shim | 39 | Snap Ring | 918 | Key |
| 11 | Snap Ring | 25 | Snap Ring | 40 | Bore Plug | 919 | Snap Ring |
| 12 | Anti-Friction Bearing | 26 | Flanged Eye Bolt | 41 | Shim | 990 | Oil Level Plug |
| 13 | NILOS Ring | 27 | Bolt | 43 | Gearcase | | |
| 14 | Gasket | 28 | Gasket | 44 | Snap Ring | | |

SERVICE


Send Quote Requests to info@automatedpt.com
Call +1(800)985-6929 To Order or Order Online At Nordgearmotors.com

Send Quote Requests to info@automatedpt.com
Call +1(800)985-6929 To Order or Order Online At Nordgearmotors.com

# Parts Lists

DRIVESYSTEMS

## Clincher™ SK0182NB + SK1282 - SK5282 AZB + VZ

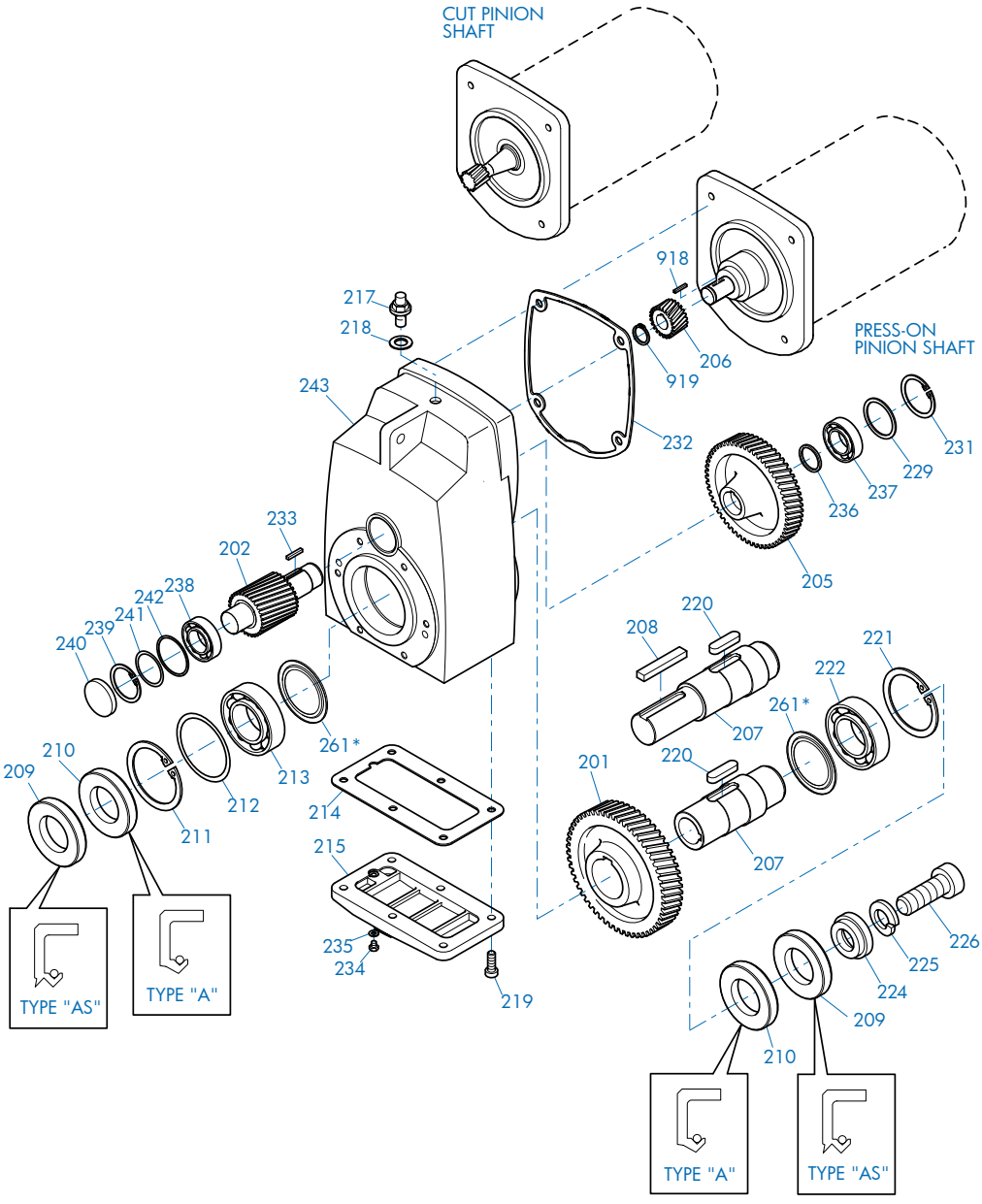


| | | | | | | | |
|---|---|---|---|---|---|---|---|
| 201 | Gear | 213 | Anti-Friction Bearing | 225 | Lock Washer | 238 | Anti-Friction Bearing |
| 202 | Pinion Shaft | 214 | Gasket | 226 | Bolt | 239 | Snap Ring |
| 205 | Gear | 215 | Inspection Cover | 229 | Thrust Washer | 240 | Bore Plug |
| 206 | Pinion | 217 | Vent Plug | 231 | Snap Ring | 241 | Shim |
| 207 | Output Shaft | 218 | Gasket | 232 | Gasket | 242 | Thrust Washer |
| 208 | Key | 219 | Bolt | 233 | Key | 243 | Gearcase |
| 209 | Oil Seal | 220 | Key | 234 | Drain Plug | 261 | Nilos Ring* |
| 210 | Oil Seal | 221 | Snap Ring | 235 | Gasket | 918 | Key |
| 211 | Snap Ring | 222 | Anti-Friction Bearing | 236 | Thrust Washer | 919 | Snap Ring |
| 212 | Shim | 224 | Retaining Washer | 237 | Anti-Friction Bearing | | |

* Conditionally used part

SERVICE


Send Quote Requests to info@automatedpt.com
Call +1(800)985-6929 To Order or Order Online At Nordgearmotors.com

Send Quote Requests to info@automatedpt.com
Call +1(800)985-6929 To Order or Order Online At Nordgearmotors.com



## Clincher™ SK0282NB + SK6282 - SK11282 AZB + VZ

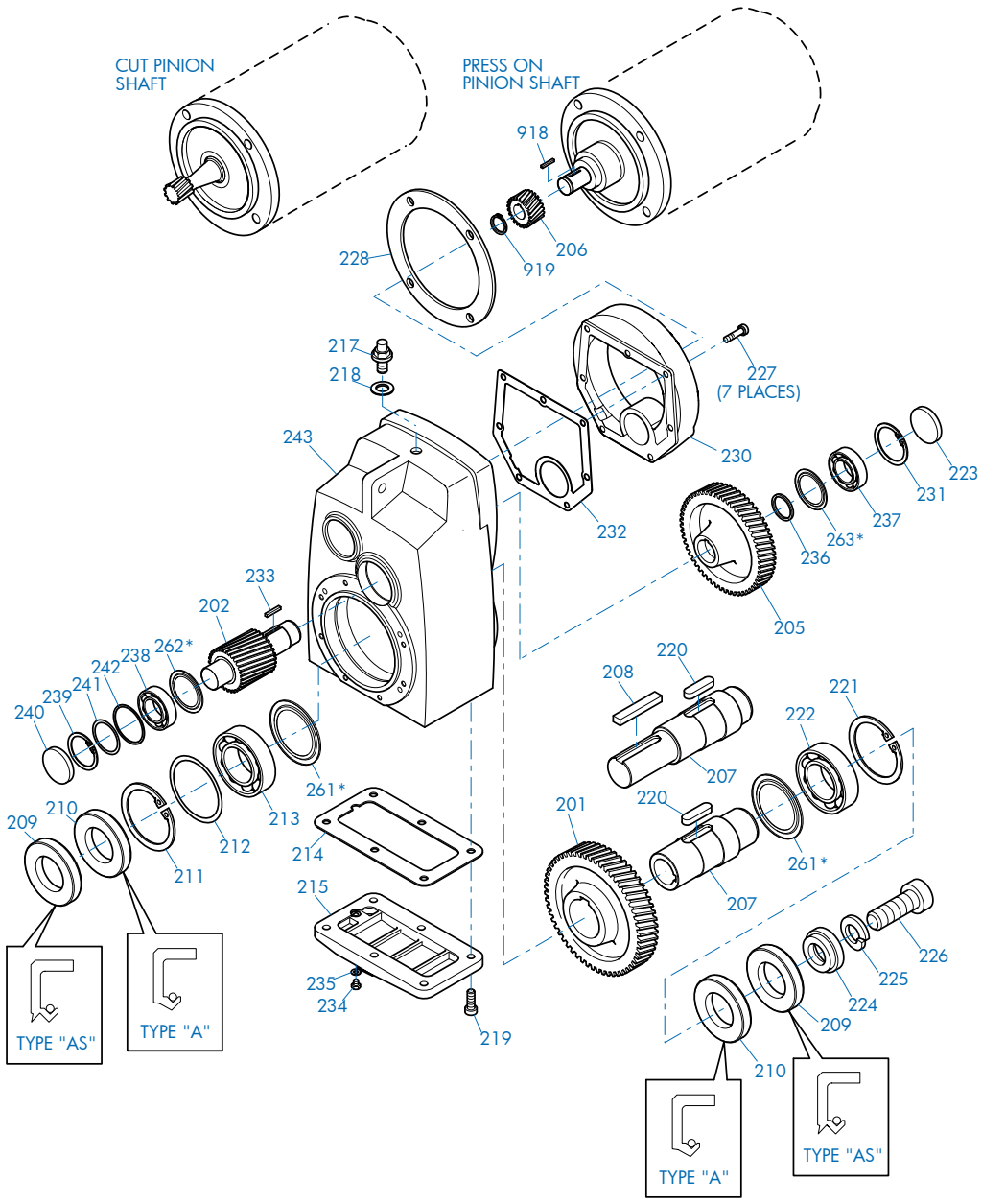


| | | | | | | | |
|---|---|---|---|---|---|---|---|
| 201 | Gear | 214 | Gasket | 227 | Bolt | 239 | Snap Ring |
| 202 | Pinion Shaft | 215 | Inspection Cover | 228 | Gasket | 240 | Bore Plug |
| 205 | Gear | 217 | Vent Plug | 230 | Input Cover | 241 | Shim |
| 206 | Pinion | 218 | Gasket | 231 | Snap Ring | 242 | Thrust Washer |
| 207 | Output Shaft | 219 | Bolt | 232 | Gasket | 243 | Gear case |
| 208 | Key | 220 | Key | 233 | Key | 261 | Nilos Ring* |
| 209 | Oil Seal | 221 | Snap Ring | 234 | Drain Plug | 262 | Nilos Ring* |
| 210 | Oil Seal | 222 | Anti-Friction Bearing | 235 | Gasket | 263 | Nilos Ring* |
| 211 | Snap Ring | 224 | Retaining Washer | 236 | Thrust Washer | 918 | Key |
| 212 | Shim | 225 | Lock Washer | 237 | Anti-Friction Bearing | 919 | Snap Ring |
| 213 | Anti-Friction Bearing | 226 | Bolt | 238 | Anti-Friction Bearing | | |

* Conditionally used part

SERVICE



Send Quote Requests to info@automatedpt.com
Call +1(800)985-6929 To Order or Order Online At Nordgearmotors.com

Send Quote Requests to info@automatedpt.com Call +1(800)985-6929 To Order or Order Online At Nordgearmotors.com

# Parts Lists

DRIVESYSTEMS

## Clincher™ SK1382NB + SK6382 - SK12382 AZB + VZ

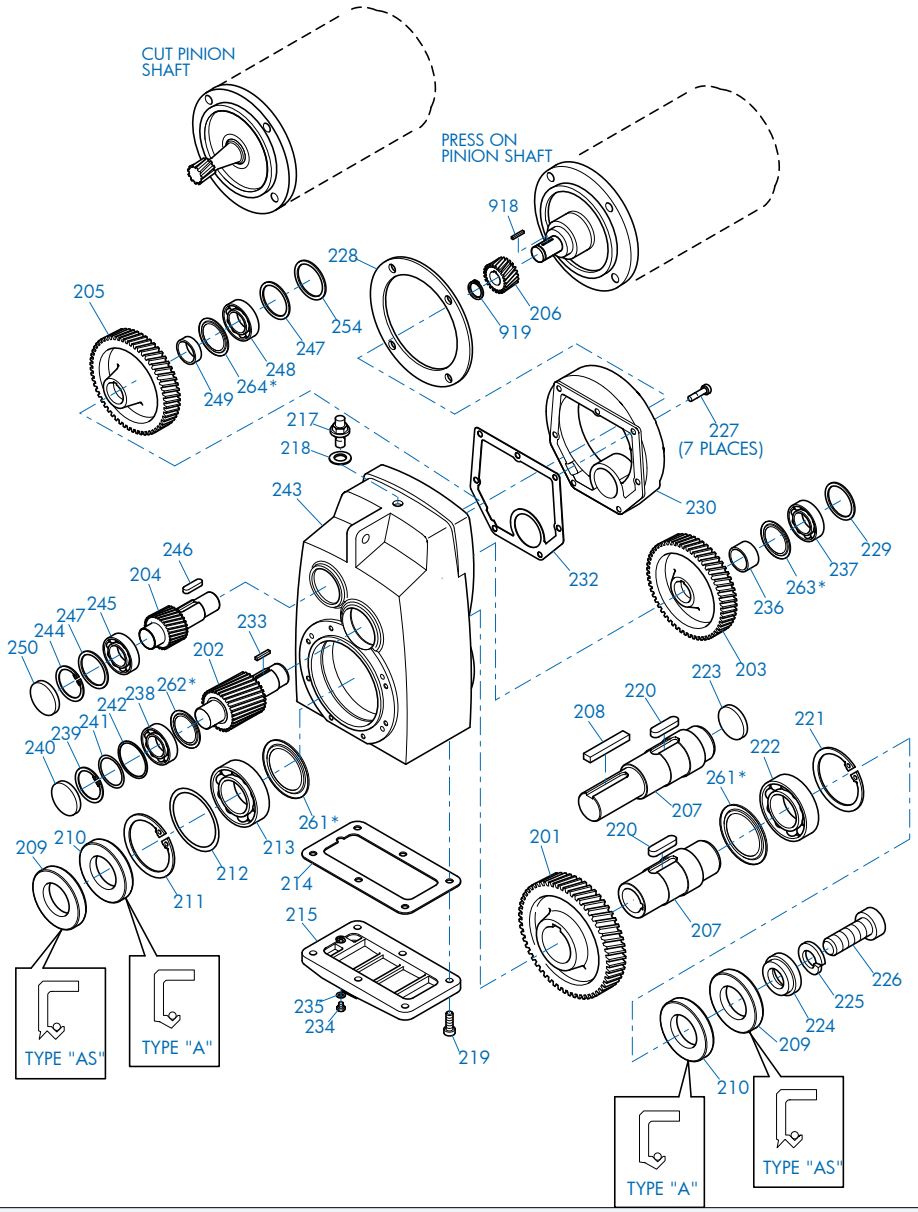


| | | | | | | | |
|---|---|---|---|---|---|---|---|
| 2201 | Gear | 215 | Inspection Cover | 230 | Input Cover | 245 | Anti-Friction Bearing |
| 202 | Pinion Shaft | 217 | Vent Plug | 232 | Gasket | 246 | Key |
| 203 | Gear | 218 | Gasket | 233 | Key | 247 | Shim |
| 204 | Pinion Shaft | 219 | Bolt | 234 | Drain Plug | 248 | Anti-Friction Bearing |
| 205 | Gear | 220 | Key | 235 | Gasket | 249 | Spacer |
| 206 | Pinion | 221 | Snap Ring | 236 | Thrust Washer | 250 | Bore Plug |
| 207 | Output Shaft | 222 | Anti-Friction Bearing | 237 | Anti-Friction Bearing | 254 | Thrust Washer |
| 208 | Key | 223 | Bore Plug | 238 | Anti-Friction Bearing | 261 | Nilos Ring* |
| 209 | Oil Seal | 224 | Retaining Washer | 239 | Snap Ring | 262 | Nilos Ring* |
| 210 | Oil Seal | 225 | Lock Washer | 240 | Bore Plug | 263 | Nilos Ring* |
| 211 | Snap Ring | 226 | Bolt | 241 | Shim | 264 | Nilos Ring* |
| 212 | Shim | 227 | Bolt | 242 | Thrust Washer | 918 | Key |
| 213 | Anti-Friction Bearing | 228 | Gasket | 243 | Gearcase | 919 | Snap Ring |
| 214 | Gasket | 229 | Thrust Washer | 244 | Snap Ring | | |

* Conditionally used part

SERVICE


Send Quote Requests to info@automatedpt.com
Call +1(800)985-6929 To Order or Order Online At Nordgearmotors.com

Send Quote Requests to info@automatedpt.com Call +1(800)985-6929 To Order or Order Online At Nordgearmotors.com



## Clincher™ SK0282NB + SK11282 VF + G

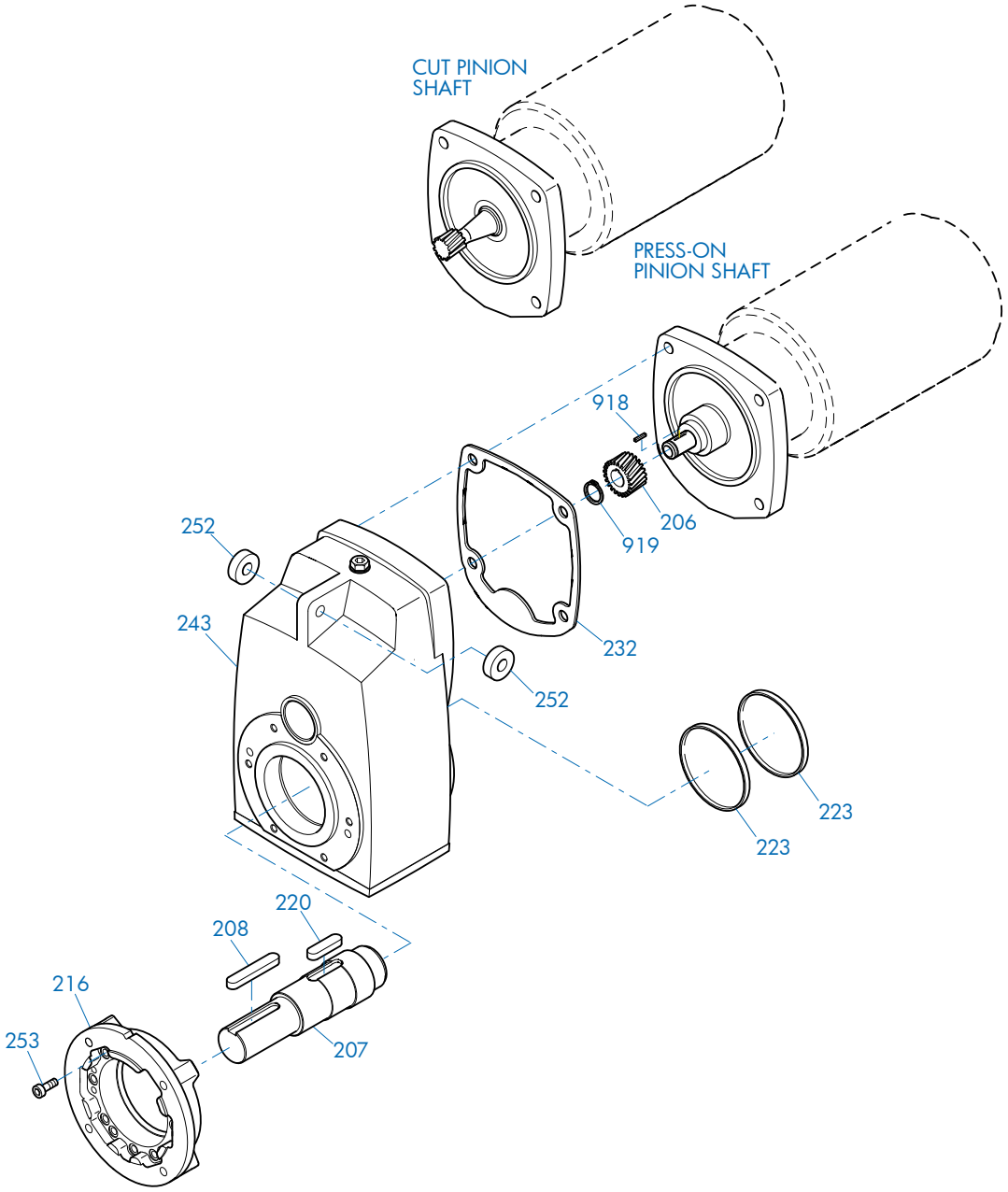


| | | |
|---|---|---|
| 206 Pinion | 220 Key | 252 Rubber Buffer |
| 207 Output Shaft | 223 Bore Plug | 253 Bolt |
| 208 Key | 232 Gasket | 918 Key |
| 216 Flange | 243 Gearcase | 919 Snap Ring |

SERVICE


Send Quote Requests to info@automatedpt.com
Call +1(800)985-6929 To Order or Order Online At Nordgearmotors.com

Send Quote Requests to info@automatedpt.com
Call +1(800)985-6929 To Order or Order Online At Nordgearmotors.com

# Parts Lists

## Helical-bevel SK92072

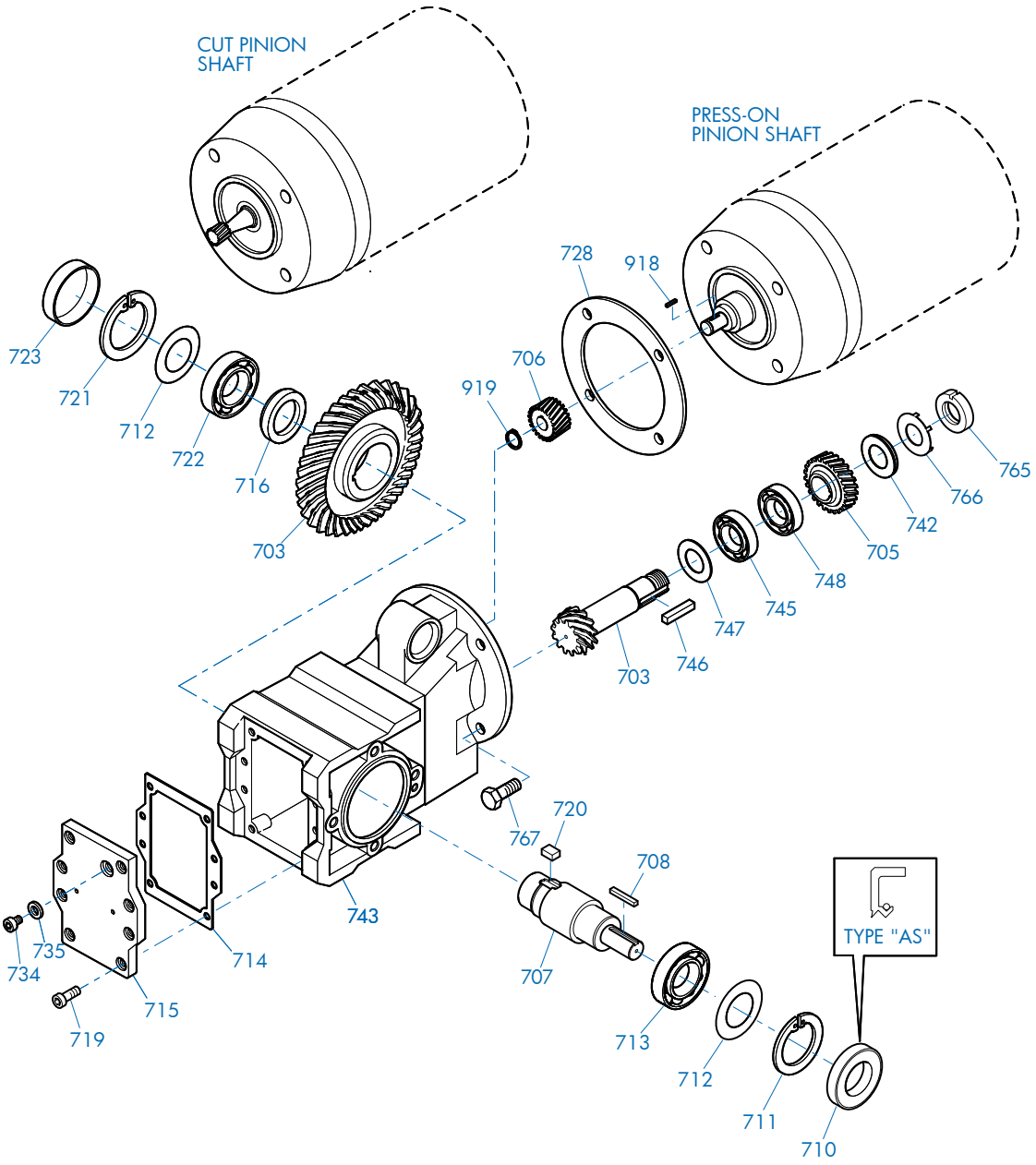


| | | | | | |
|---|---|---|---|---|---|
| 703 | Bevel Gearset | 716 | Spacer | 745 | Anti-Friction Bearing |
| 705 | Gear | 719 | Bolt | 746 | Key |
| 706 | Pinion | 720 | Key | 747 | Shim |
| 707 | Output Shaft | 721 | Snap Ring | 748 | Anti-Friction Bearing |
| 708 | Key | 722 | Anti-Friction Bearing | 765 | Slotted Nut |
| 710 | Oil Seal | 723 | Bore Plug | 766 | Tab Lock Washer |
| 711 | Snap Ring | 728 | Gasket | 767 | Bolt |
| 712 | Shim | 734 | Oil Plug | 918 | Key |
| 713 | Anti-Friction Bearing | 735 | Gasket | 919 | Snap Ring |
| 714 | Gasket | 742 | Thrust Washer | | |
| 715 | Inspection Cover | 743 | Gear case | | |

SERVICE


Send Quote Requests to info@automatedpt.com
Call +1(800)985-6929 To Order or Order Online At Nordgearmotors.com

Send Quote Requests to info@automatedpt.com
Call +1(800)985-6929 To Order or Order Online At Nordgearmotors.com



## Helical-bevel SK92072AZSH + B + F

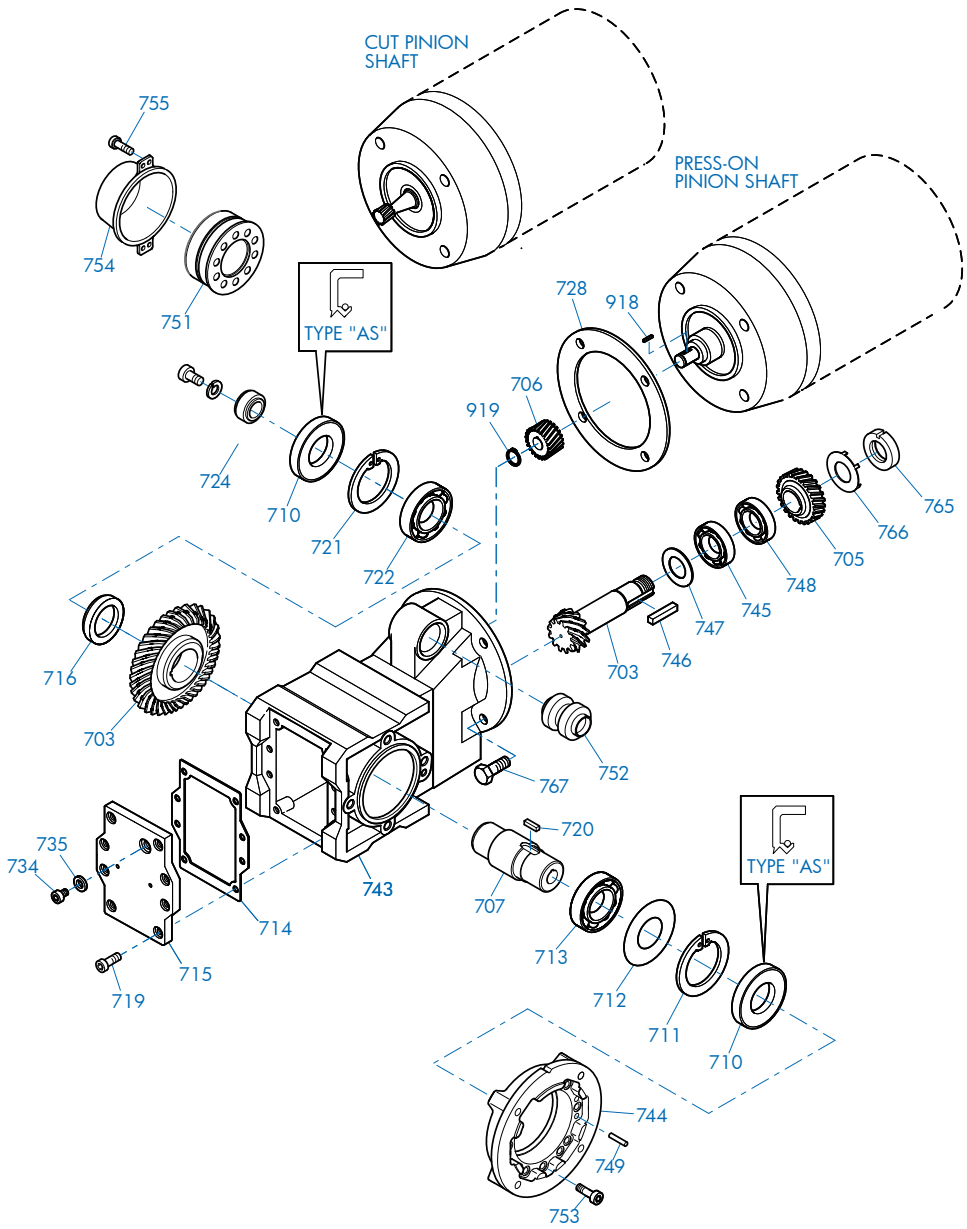


| | | | | | |
|---|---|---|---|---|---|
| 703 | Bevel Gearset | 720 | Key | 748 | Anti-Friction Bearing |
| 705 | Gear | 721 | Snap Ring | 749 | Grooved Pin |
| 706 | Pinion | 722 | Anti-Friction Bearing | 751 | Shrink Disc |
| 707 | Output Shaft | 724 | Fixing Element Kit | 752 | Rubber Buffer |
| 710 | Oil Seal | 728 | Gasket | 753 | Bolt |
| 711 | Snap Ring | 734 | Oil Plug | 754 | Cover |
| 712 | Shim | 735 | Gasket | 755 | Bolt |
| 713 | Anti-Friction Bearing | 743 | Gearcase | 765 | Slotted Round Nut |
| 714 | Gasket | 744 | Flange | 766 | Tab Lock Washer |
| 715 | Inspection Cover | 745 | Anti-Friction Bearing | 767 | Bolt |
| 716 | Spacer | 746 | Key | 918 | Key |
| 719 | Bolt | 747 | Shim | 919 | Snap Ring |

SERVICE


Send Quote Requests to info@automatedpt.com
Call +1(800)985-6929 To Order or Order Online At Nordgearmotors.com

Send Quote Requests to info@automatedpt.com
Call +1(800)985-6929 To Order or Order Online At Nordgearmotors.com

# Parts Lists

## Helical-bevel SK92172 - SK92772

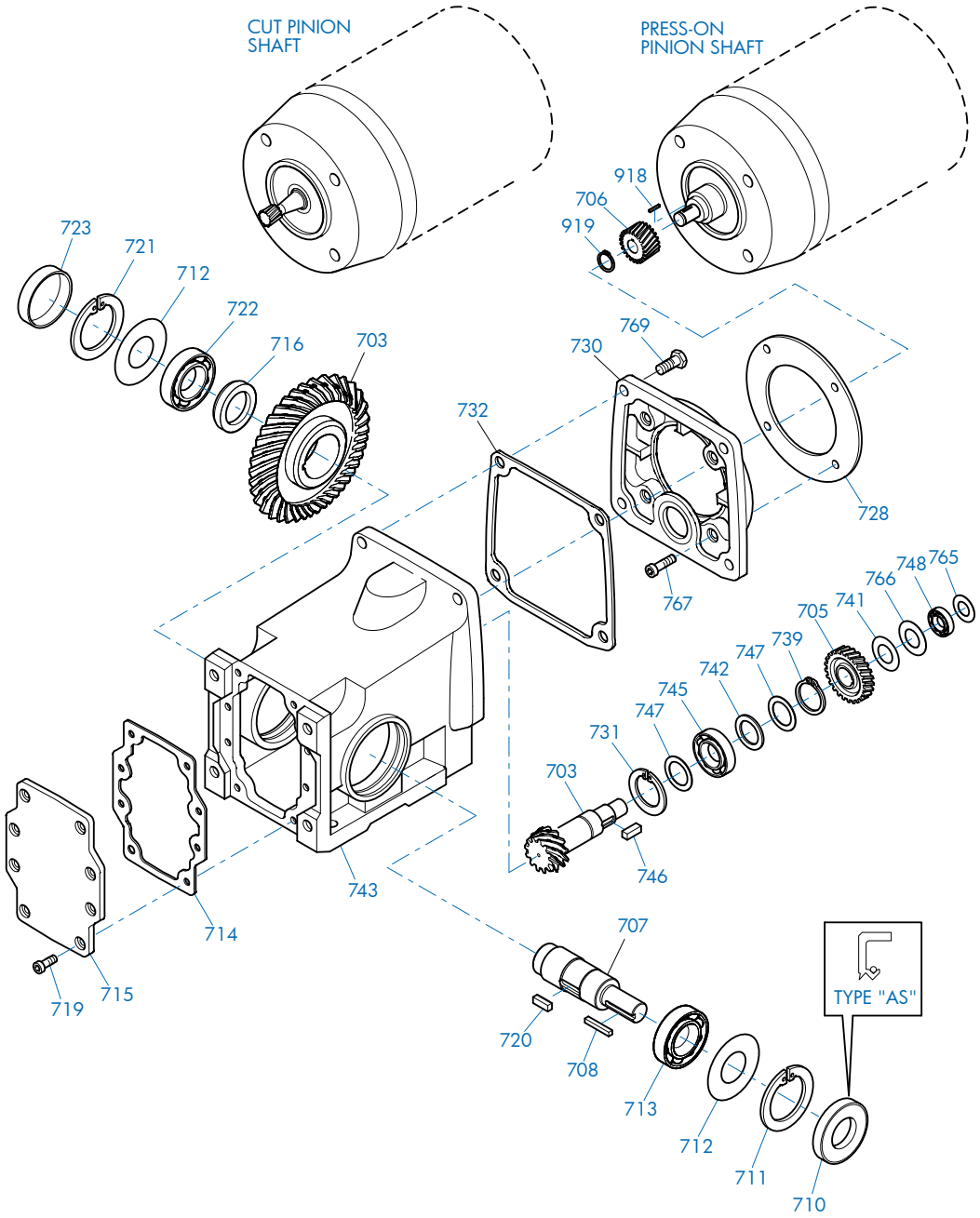


| | | | | | | | |
|---|---|---|---|---|---|---|---|
| 703 | Bevel Gearset | 714 | Gasket | 730 | Input Cover | 747 | Shim |
| 705 | Gear | 715 | Inspection Cover | 731 | Snap Ring | 748 | Anti-Friction Bearing |
| 706 | Pinion | 716 | Spacer | 732 | Gasket | 765 | Shim |
| 707 | Output Shaft | 719 | Bolt | 739 | Snap Ring | 766 | Snap Ring |
| 708 | Key | 720 | Key | 741 | Shim | 767 | Bolt |
| 710 | Oil Seal | 721 | Snap Ring | 742 | Thrust Washer | 769 | Bolt |
| 711 | Snap Ring | 722 | Anti-Friction Bearing | 743 | Gearcase | 918 | Key |
| 712 | Shim | 723 | Bore Plug | 745 | Anti-Friction Bearing | 919 | Snap Ring |
| 713 | Anti-Friction Bearing | 728 | Gasket | 746 | Key | | |

SERVICE


Send Quote Requests to info@automatedpt.com
Call +1(800)985-6929 To Order or Order Online At Nordgearmotors.com

Send Quote Requests to info@automatedpt.com
Call +1(800)985-6929 To Order or Order Online At Nordgearmotors.com



## Helical-bevel SK92172 - SK92772VF + D

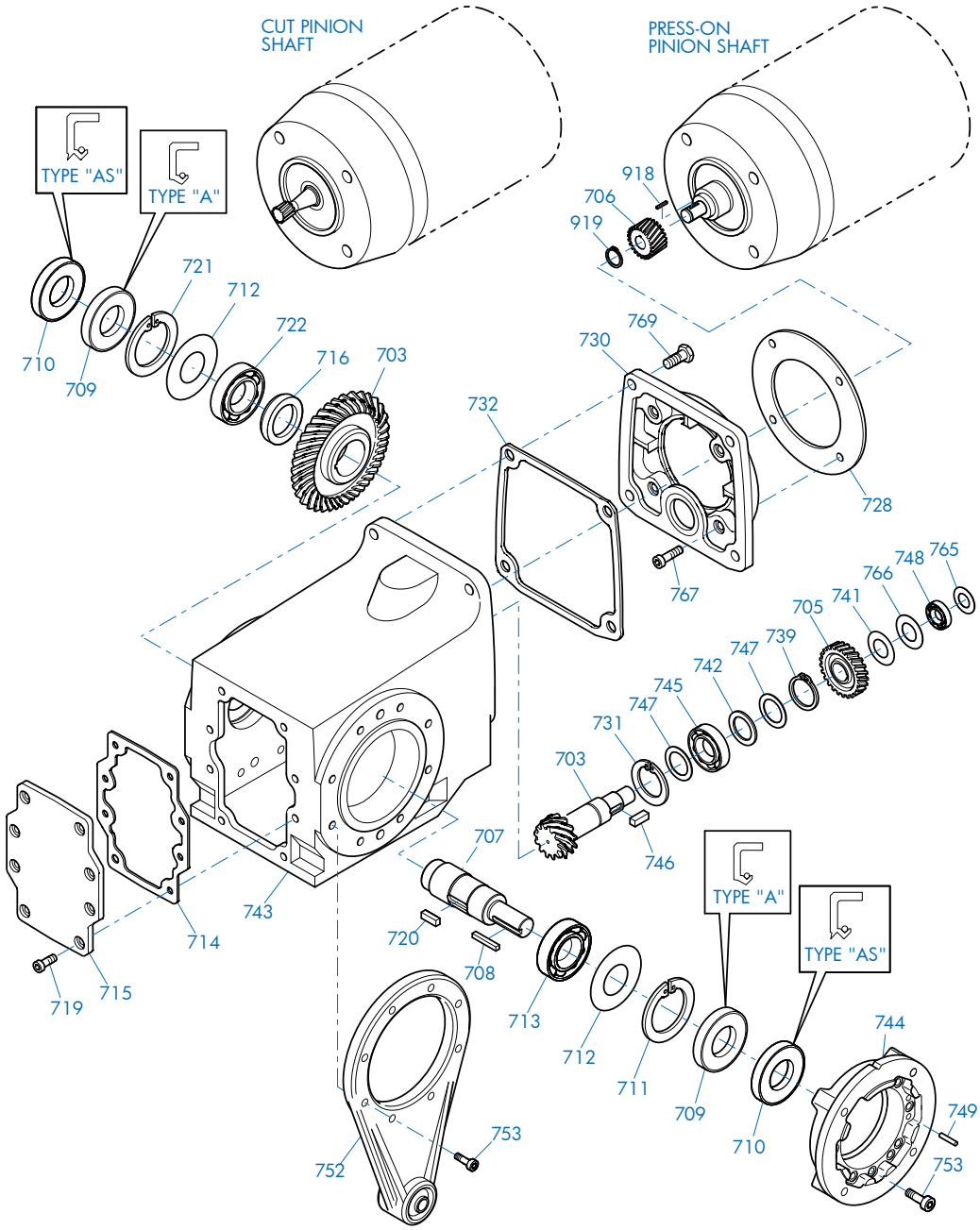


| | | | | | | | |
|---|---|---|---|---|---|---|---|
| 703 | Bevel Gearset | 714 | Gasket | 732 | Gasket | 749 | Grooved Pin |
| 705 | Gear | 715 | Inspection Cover | 739 | Snap Ring | 753 | Bolt |
| 706 | Pinion | 716 | Spacer | 741 | Shim | 765 | Shim |
| 707 | Output Shaft | 719 | Bolt | 742 | Thrust Washer | 766 | Snap Ring |
| 708 | Key | 720 | Key | 743 | Gearcase | 767 | Bolt |
| 709 | Oil Seal | 721 | Snap Ring | 744 | Flange | 769 | Bolt |
| 710 | Oil Seal | 722 | Anti-Friction Bearing | 745 | Anti-Friction Bearing | 918 | Key |
| 711 | Snap Ring | 728 | Gasket | 746 | Key | 919 | Snap Ring |
| 712 | Shim | 730 | Input Cover | 747 | Shim | | |
| 713 | Anti-Friction Bearing | 731 | Snap Ring | 748 | Anti-Friction Bearing | | |

SERVICE


Send Quote Requests to info@automatedpt.com
Call +1(800)985-6929 To Order or Order Online At Nordgearmotors.com

Send Quote Requests to info@automatedpt.com
Call +1(800)985-6929 To Order or Order Online At Nordgearmotors.com

# Parts Lists

DRIVESYSTEMS

## Helical-bevel SK92172 - SK92772AZSH + B + F + D

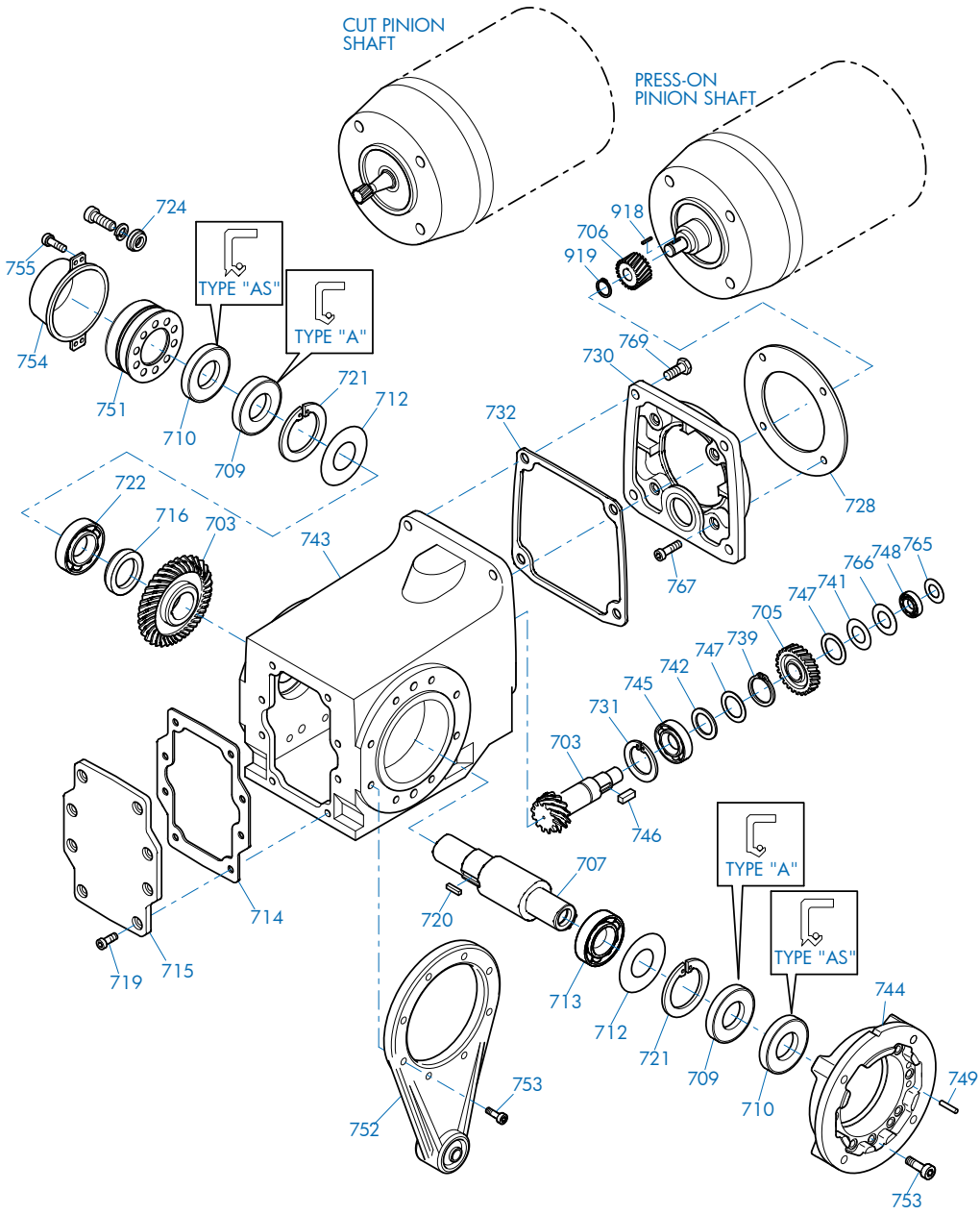


| | | | | | | | |
|---|---|---|---|---|---|---|---|
| 703 | Bevel Gearset | 719 | Bolt | 742 | Thrust Washer | 754 | Cover |
| 705 | Gear | 720 | Key | 743 | Gearcase | 755 | Bolt |
| 706 | Pinion | 721 | Snap Ring | 744 | Flange | 765 | Shim |
| 707 | Output Shaft | 722 | Anti-Friction Bearing | 745 | Anti-Friction Bearing | 766 | Snap Ring |
| 709 | Oil Seal | 724 | Fixing Element Kit | 746 | Key | 767 | Bolt |
| 710 | Oil Seal | 728 | Gasket | 747 | Shim | 769 | Bolt |
| 712 | Shim | 730 | Input Cover | 748 | Anti-Friction Bearing | 918 | Key |
| 713 | Anti-Friction Bearing | 731 | Snap Ring | 749 | Grooved Pin | 919 | Snap Ring |
| 714 | Gasket | 732 | Gasket | 751 | Shrink Disc Connector | | |
| 715 | Inspection Cover | 739 | Snap Ring | 752 | Torque Arm | | |
| 716 | Spacer | 741 | Shim | 753 | Bolt | | |

SERVICE


Send Quote Requests to info@automatedpt.com
Call +1(800)985-6929 To Order or Order Online At Nordgearmotors.com

Send Quote Requests to info@automatedpt.com
Call +1(800)985-6929 To Order or Order Online At Nordgearmotors.com



## Helical-bevel SK9012.1 - SK9096.1

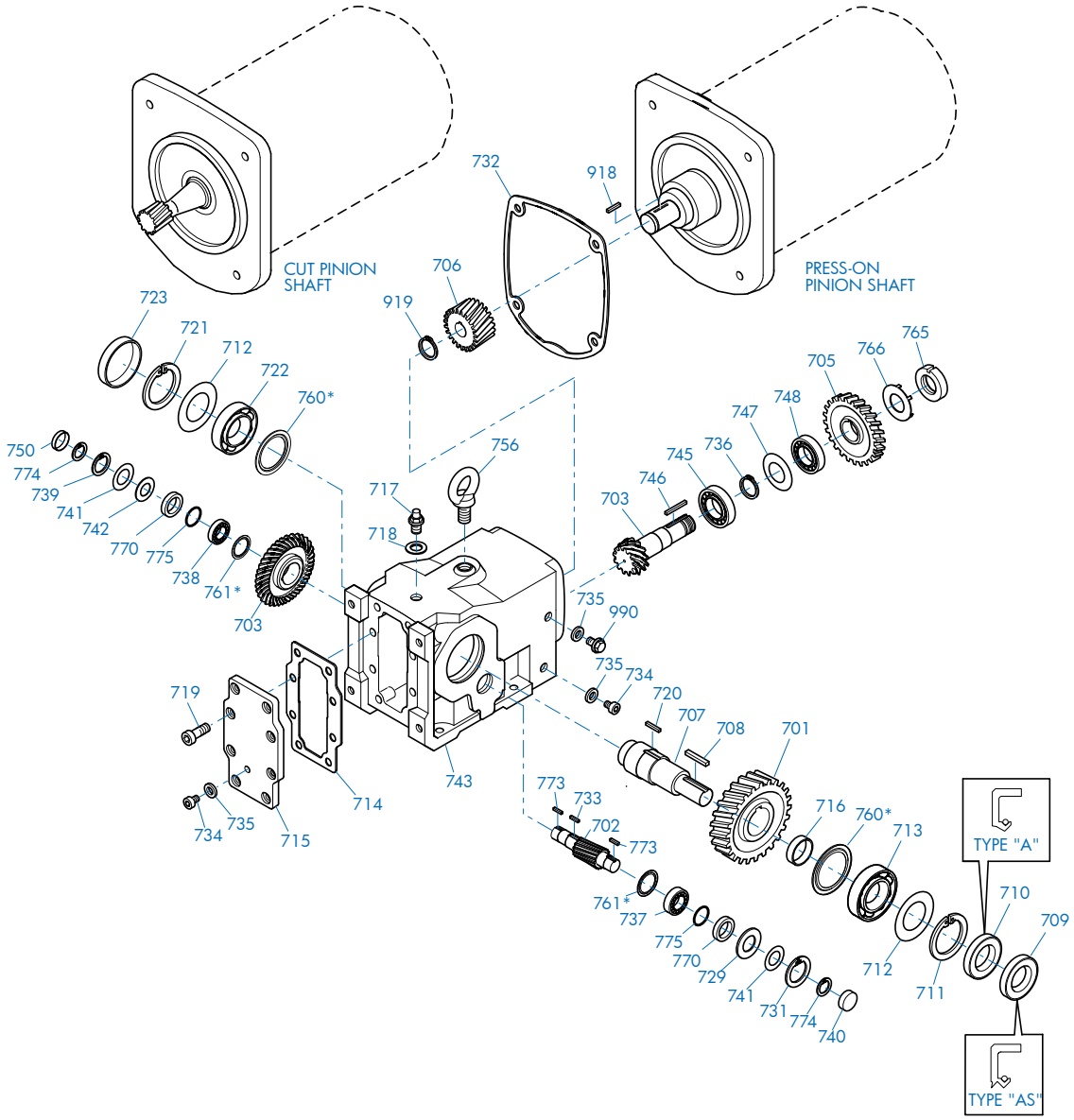


| | | | | | | | |
|---|---|---|---|---|---|---|---|
| 701 | Output Gear | 716 | Spacer | 736 | Snap Ring | 760 | Nilos Ring* |
| 702 | Pinion Shaft | 717 | Vent screw | 737 | Anti-Friction Bearing | 761 | Nilos Ring* |
| 703 | Bevel Gearset | 718 | Gasket | 738 | Anti-Friction Bearing | 765 | Slotted Round Nut |
| 705 | Gear | 719 | Bolt | 739 | Snap Ring | 766 | Tab Lock Washer |
| 706 | Pinion | 720 | Key | 740 | Bore Plug | 770 | Backstop (If Equipped) |
| 707 | Output Shaft | 721 | Snap Ring | 741 | Shim | 773 | Key (w/Backstop) |
| 708 | Key | 722 | Anti-Friction Bearing | 742 | Thrust Washer | 774 | Snap Ring (w/Backstop) |
| 709 | Oil Seal | 723 | Bore Plug | 743 | Gearcase | 775 | Thrust Washer (w/Backstop) |
| 710 | Oil Seal | 729 | Thrust Washer | 745 | Anti-Friction Bearing | 918 | Key |
| 711 | Snap Ring | 731 | Snap Ring | 746 | Key | 919 | Snap Ring |
| 712 | Shim | 732 | Gasket | 747 | Shim | 990 | Oil Level Plug |
| 713 | Anti-Friction Bearing | 733 | Key | 748 | Anti-Friction Bearing | | |
| 714 | Gasket | 734 | Oil Plug | 750 | Bore Plug | | |
| 715 | Inspection Cover | 735 | Gasket | 756 | Flanged Eye Bolt | | |

SERVICE


Send Quote Requests to info@automatedpt.com
Call +1(800)985-6929 To Order or Order Online At Nordgearmotors.com

Send Quote Requests to info@automatedpt.com Call +1(800)985-6929 To Order or Order Online At Nordgearmotors.com



## Helical-bevel SK9012.1 - SK9096.1VZ + F

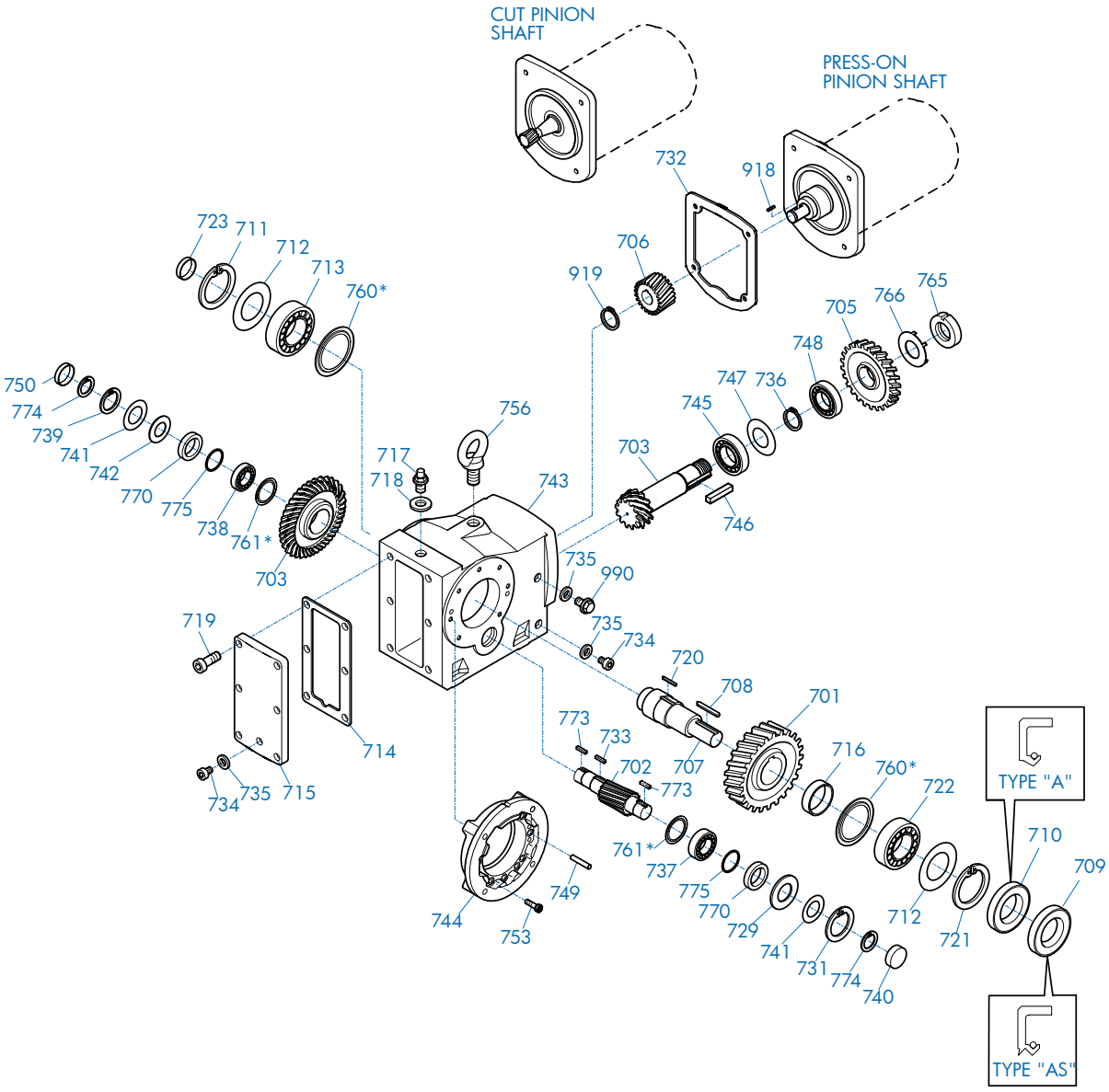


| | | | | | | | |
|---|---|---|---|---|---|---|---|
| 701 | Output Gear | 717 | Vent Plug | 738 | Anti-Friction Bearing | 760 | Nilos Ring* |
| 702 | Pinion Shaft | 718 | Gasket | 739 | Snap Ring | 761 | Nilos Ring* |
| 703 | Bevel Gearset | 719 | Bolt | 740 | Bore Plug | 765 | Slotted Round Nut |
| 705 | Gear | 720 | Key | 741 | Shim | 766 | Tab Lock Washer |
| 706 | Pinion | 721 | Snap Ring | 742 | Thrust Washer | 770 | Backstop (If Equipped) |
| 707 | Output Shaft | 722 | Anti-Friction Bearing | 743 | Gearcase | 773 | Key (w/Backstop) |
| 708 | Key | 723 | Bore Plug | 744 | Flange | 774 | Snap Ring (w/Backstop) |
| 709 | Oil Seal | 729 | Thrust Washer | 745 | Anti-Friction Bearing | 775 | Thrust Washer (w/Backstop) |
| 710 | Oil Seal | 731 | Snap Ring | 746 | Key | 918 | Key |
| 711 | Snap Ring | 732 | Gasket | 747 | Shim | 919 | Snap Ring |
| 712 | Shim | 733 | Key | 748 | Anti-Friction Bearing | 990 | Oil Level Plug |
| 713 | Anti-Friction Bearing | 734 | Oil plug | 749 | Dowel Pin | | |
| 714 | Gasket | 735 | Gasket | 750 | Bore Plug | | |
| 715 | Inspection Cover | 736 | Snap Ring | 753 | Bolt | | |
| 716 | Spacer | 737 | Anti-Friction Bearing | 756 | Flanged Eye Bolt | | |

SERVICE


Send Quote Requests to info@automatedpt.com
Call +1(800)985-6929 To Order or Order Online At Nordgearmotors.com

Send Quote Requests to info@automatedpt.com
Call +1(800)985-6929 To Order or Order Online At Nordgearmotors.com



## Helical-bevel SK9012.1 - SK9096.1AZDB

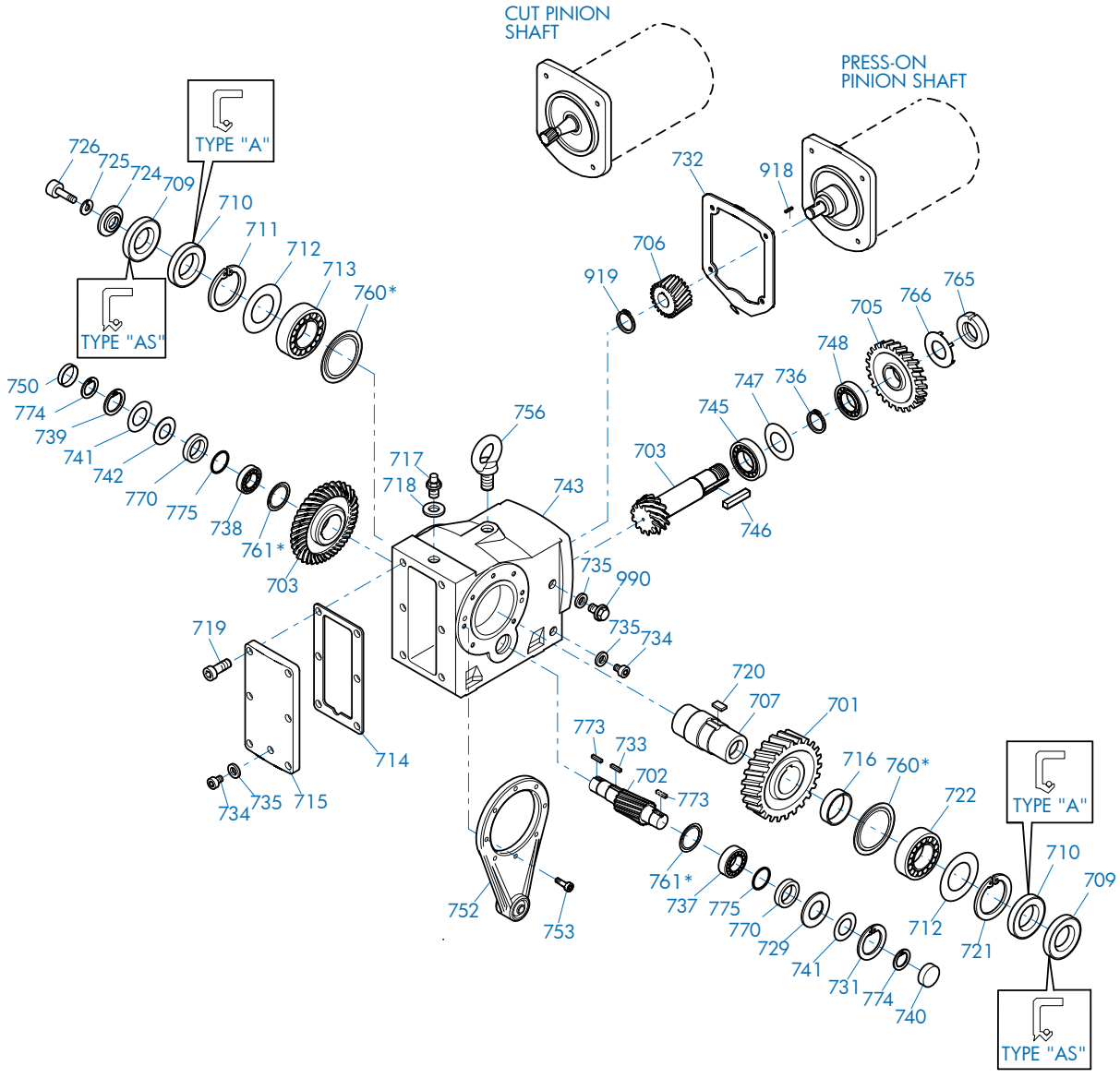


| | | | | | | | |
|---|---|---|---|---|---|---|---|
| 701 | Gear | 718 | Gasket | 737 | Anti-Friction Bearing | 760 | Nilos Ring* |
| 702 | Pinion Shaft | 719 | Bolt | 738 | Anti-Friction Bearing | 761 | Nilos Ring* |
| 703 | Bevel Gearset | 720 | Key | 739 | Snap Ring | 765 | Slotted Round Nut |
| 705 | Gear | 721 | Snap Ring | 740 | Bore Plug | 766 | Tab Lock Washer |
| 706 | Pinion | 722 | Anti-Friction Bearing | 741 | Shim | 770 | Backstop (If Equipped) |
| 707 | Output Shaft | 724 | Retaining Washer | 742 | Thrust Washer | 773 | Key (w/Backstop) |
| 709 | Oil Seal | 725 | Lock Washer | 743 | Gearcase | 774 | Snap Ring (w/Backstop) |
| 710 | Oil Seal | 726 | Bolt | 745 | Anti-Friction Bearing | 775 | Thrust Washer (w/Backstop) |
| 711 | Snap Ring | 729 | Thrust Washer | 746 | Key | 918 | Key |
| 712 | Shim | 731 | Snap Ring | 747 | Shim | 919 | Snap Ring |
| 713 | Anti-Friction Bearing | 732 | Gasket | 748 | Anti-Friction Bearing | 990 | Oil Level Plug |
| 714 | Gasket | 733 | Key | 750 | Bore Plug | | |
| 715 | Inspection Cover | 734 | Oil plug | 752 | Torque Arm | | |
| 716 | Spacer | 735 | Gasket | 753 | Bolt | | |
| 717 | Vent Plug | 736 | Snap Ring | 756 | Flanged Eye Bolt | | |

SERVICE


Send Quote Requests to info@automatedpt.com
Call +1(800)985-6929 To Order or Order Online At Nordgearmotors.com

Send Quote Requests to info@automatedpt.com
Call +1(800)985-6929 To Order or Order Online At Nordgearmotors.com

# Parts Lists

DRIVESYSTEMS

## Helical-worm SK02040 - SK42125

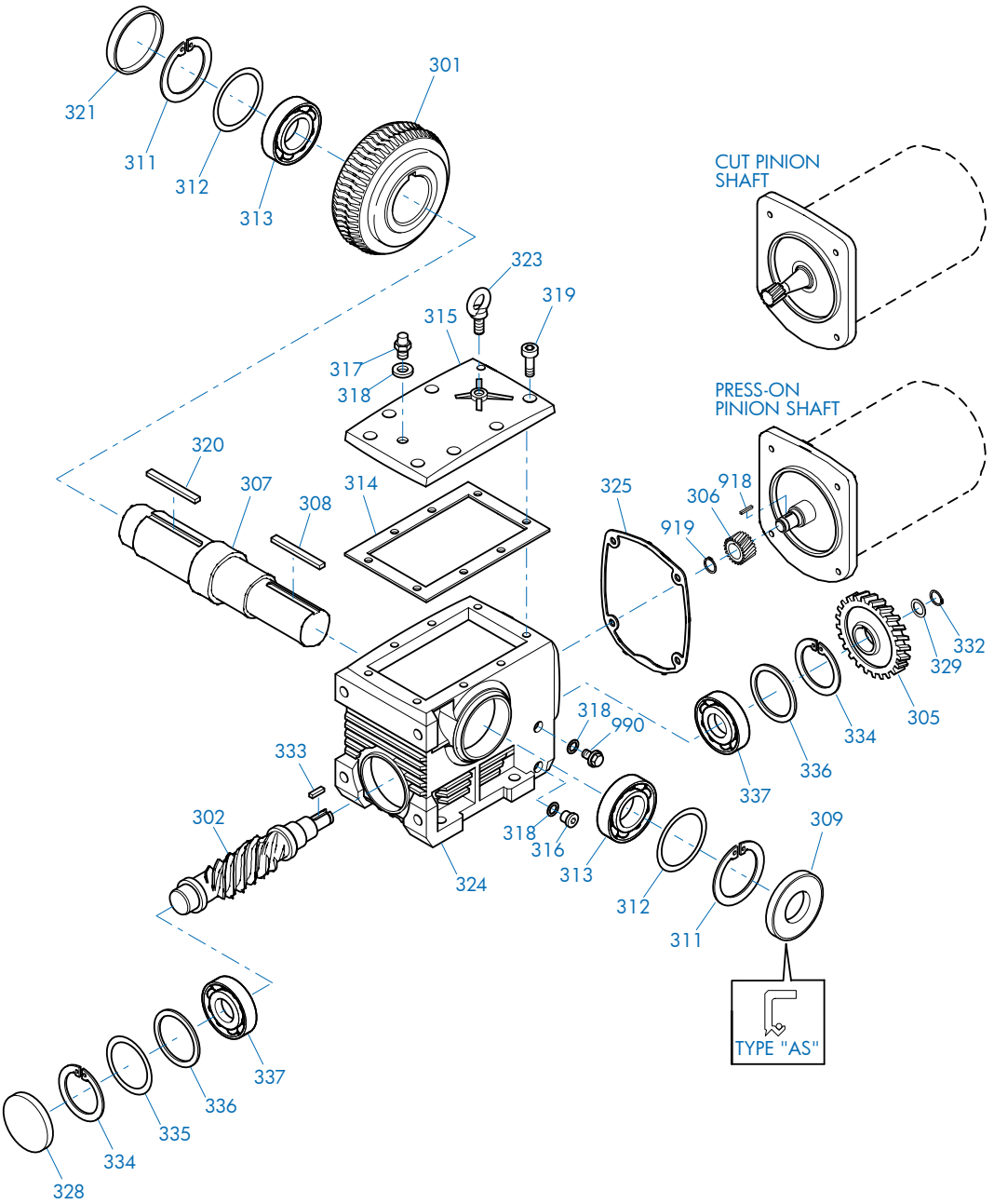


| | | | | | |
|---|---|---|---|---|---|
| 301 | Worm Wheel | 315 | Inspection Cover | 329 | Thrust Washer |
| 302 | Worm | 316 | Drain Plug | 332 | Snap Ring |
| 305 | Gear | 317 | Vent Plug | 333 | Key |
| 306 | Pinion | 318 | Gasket | 334 | Snap Ring |
| 307 | Output Shaft | 319 | Socket Head Screw | 335 | Shim |
| 308 | Key | 320 | Key | 336 | Thrust Washer |
| 309 | Oil Seal | 321 | Bore Plug | 337 | Anti-Friction Bearing |
| 311 | Snap Ring | 323 | Flanged Eye Bolt | 918 | Key |
| 312 | Shim | 324 | Gearcase | 919 | Snap Ring |
| 313 | Anti-Friction Bearing | 325 | Gasket | 990 | Oil Level Plug |
| 314 | Gasket | 328 | Bore Plug | | |

SERVICE


Send Quote Requests to info@automatedpt.com
Call +1(800)985-6929 To Order or Order Online At Nordgearmotors.com

Send Quote Requests to info@automatedpt.com
Call +1(800)985-6929 To Order or Order Online At Nordgearmotors.com



## Helical-worm SK02040 - SK42125VF

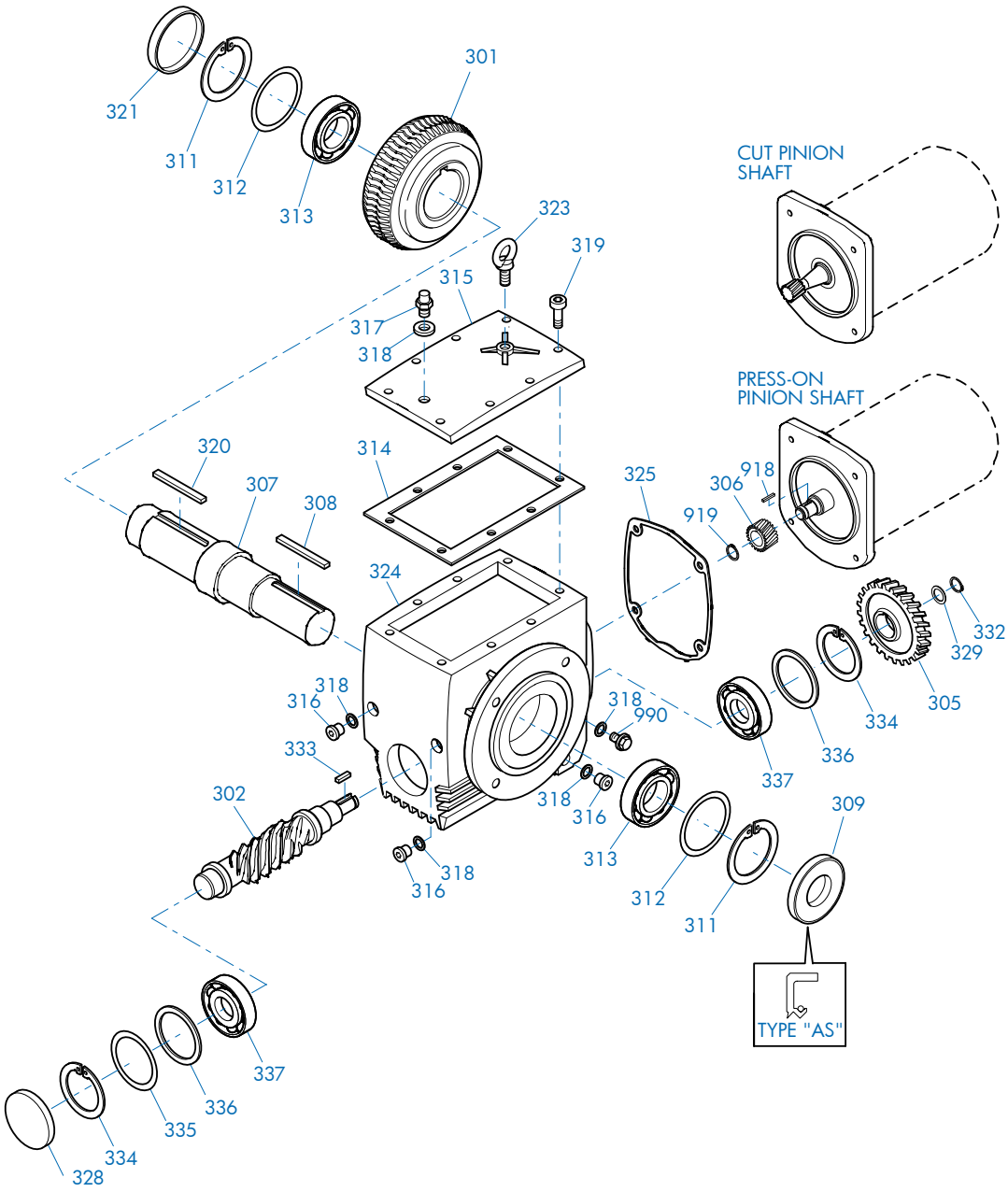


| | | | | | |
|---|---|---|---|---|---|
| 301 | Worm Wheel | 315 | Inspection Cover | 329 | Thrust Washer |
| 302 | Worm | 316 | Drain Plug | 332 | Snap Ring |
| 305 | Gear | 317 | Vent Plug | 333 | Key |
| 306 | Pinion | 318 | Gasket | 334 | Snap Ring |
| 307 | Output Shaft | 319 | Socket Head Screw | 335 | Shim |
| 308 | Key | 320 | Key | 336 | Thrust Washer |
| 309 | Oil Seal | 321 | Bore Plug | 337 | Anti-Friction Bearing |
| 311 | Snap Ring | 323 | Flanged Eye Bolt | 918 | Key |
| 312 | Shim | 324 | Gearcase | 919 | Snap Ring |
| 313 | Anti-Friction Bearing | 325 | Gasket | 990 | Oil Level Plug |
| 314 | Gasket | 328 | Bore Plug | | |

SERVICE


Send Quote Requests to info@automatedpt.com
Call +1(800)985-6929 To Order or Order Online At Nordgearmotors.com

Send Quote Requests to info@automatedpt.com
Call +1(800)985-6929 To Order or Order Online At Nordgearmotors.com



## Helical-worm SK02040 - SK42125AZAF

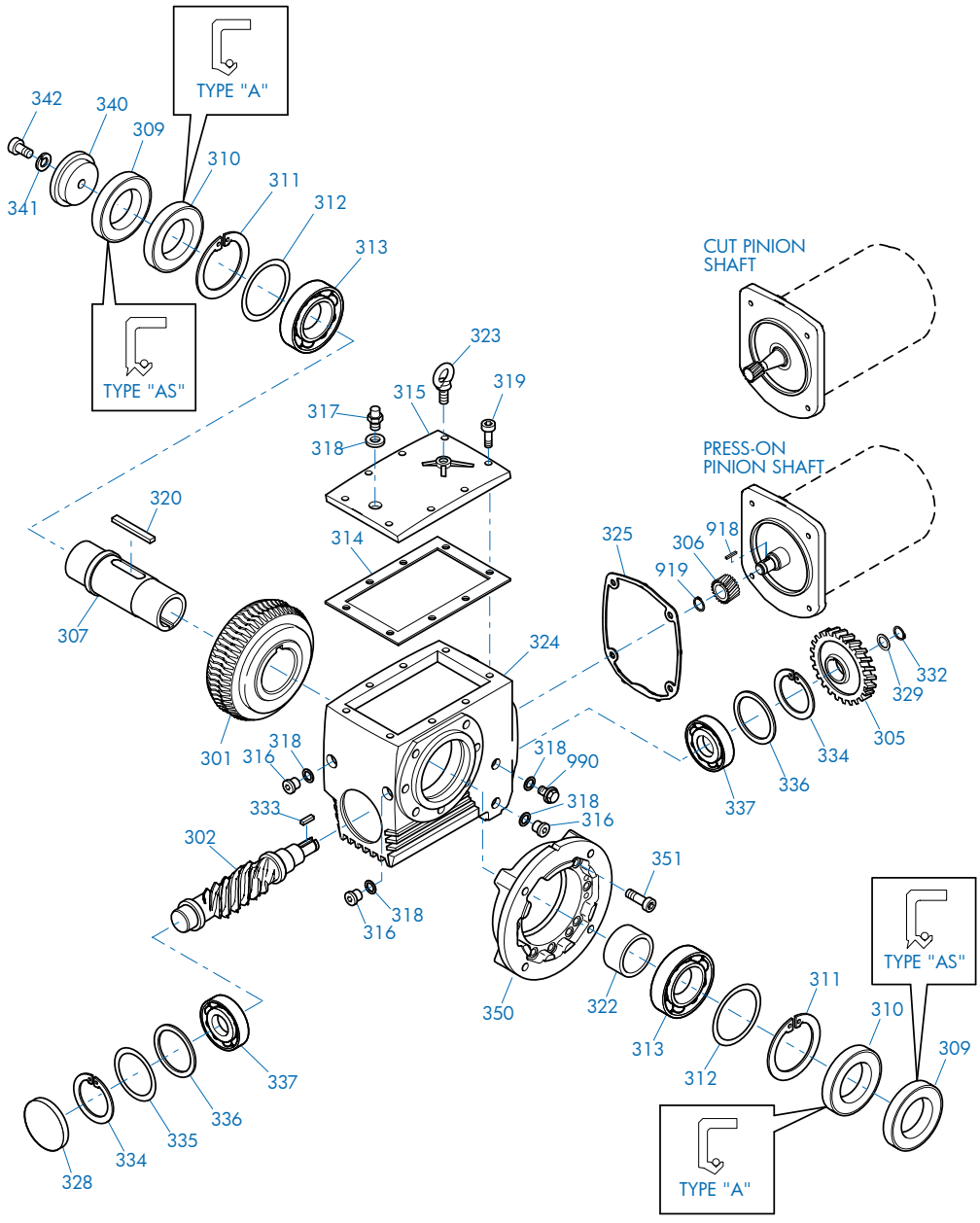


| | | | | | |
|---|---|---|---|---|---|
| 301 | Worm Wheel | 317 | Vent Plug | 335 | Shim |
| 302 | Worm | 318 | Gasket | 336 | Thrust Washer |
| 305 | Gear | 319 | Socket Head Screw | 337 | Anti-Friction Bearing |
| 306 | Pinion | 320 | Key | 340 | Retaining Washer |
| 307 | Output Shaft | 322 | Spacer | 341 | Lock Washer |
| 309 | Oil Seal | 323 | Flanged Eye Bolt | 342 | Bolt |
| 310 | Oil Seal | 324 | Gearcase | 350 | Flange |
| 311 | Snap Ring | 325 | Gasket | 351 | Bolt |
| 312 | Shim | 328 | Bore Plug | 918 | Key |
| 313 | Anti-Friction Bearing | 329 | Thrust Washer | 919 | Snap Ring |
| 314 | Gasket | 332 | Snap Ring | 990 | Oil Level Plug |
| 315 | Inspection Cover | 333 | Key | | |
| 316 | Drain Plug | 334 | Snap Ring | | |

SERVICE


Send Quote Requests to info@automatedpt.com
Call +1(800)985-6929 To Order or Order Online At Nordgearmotors.com

Send Quote Requests to info@automatedpt.com
Call +1(800)985-6929 To Order or Order Online At Nordgearmotors.com



## Helical-worm SK02040 - SK42125VF

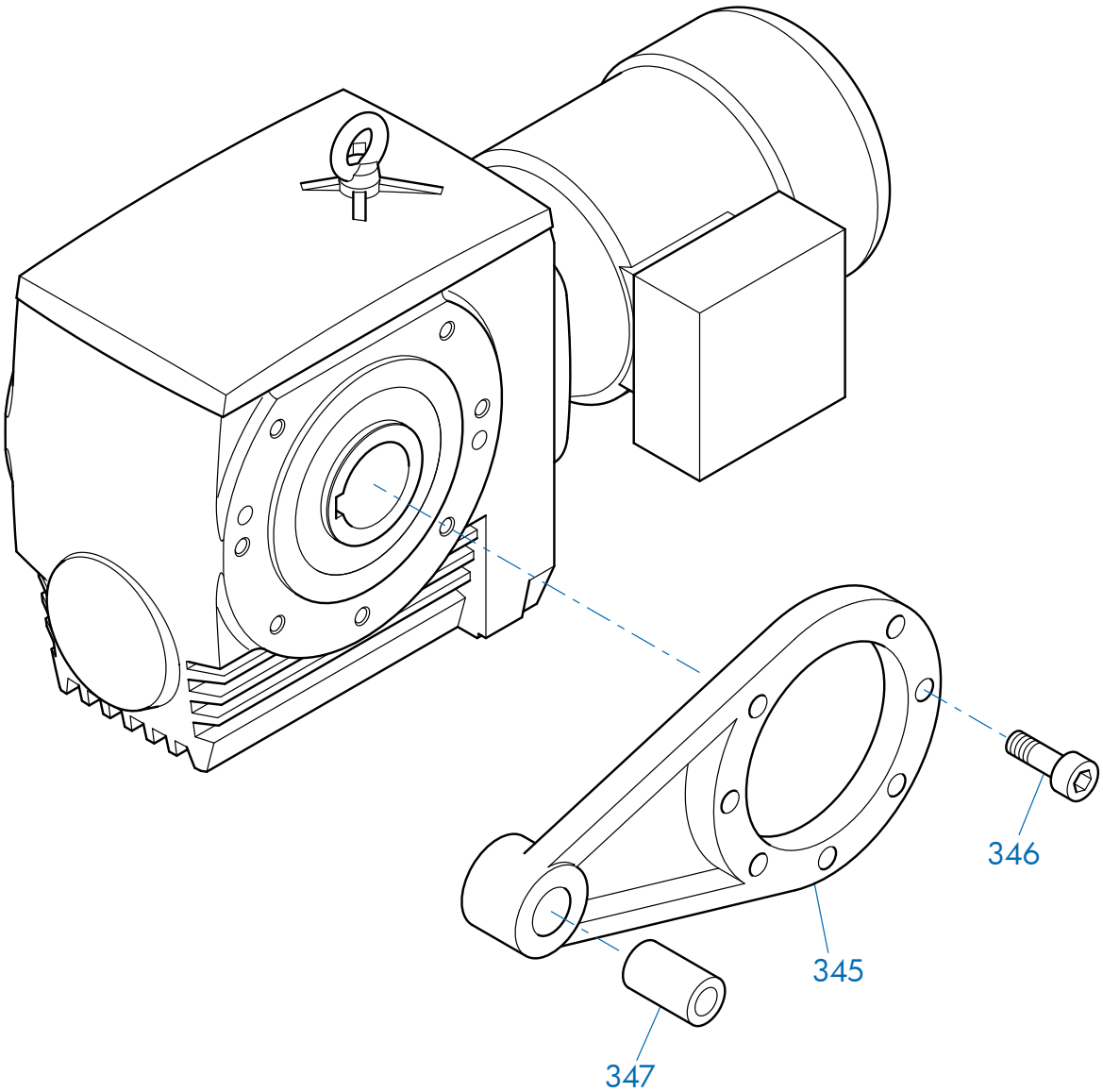


| | | |
|---|---|---|
| 345 Torque Arm | 346 Bolt | 347 Bushing |


Send Quote Requests to info@automatedpt.com
Call +1(800)985-6929 To Order or Order Online At Nordgearmotors.com

Send Quote Requests to info@automatedpt.com
Call +1(800)985-6929 To Order or Order Online At Nordgearmotors.com

# Parts Lists

## Input Single-stage Reduction

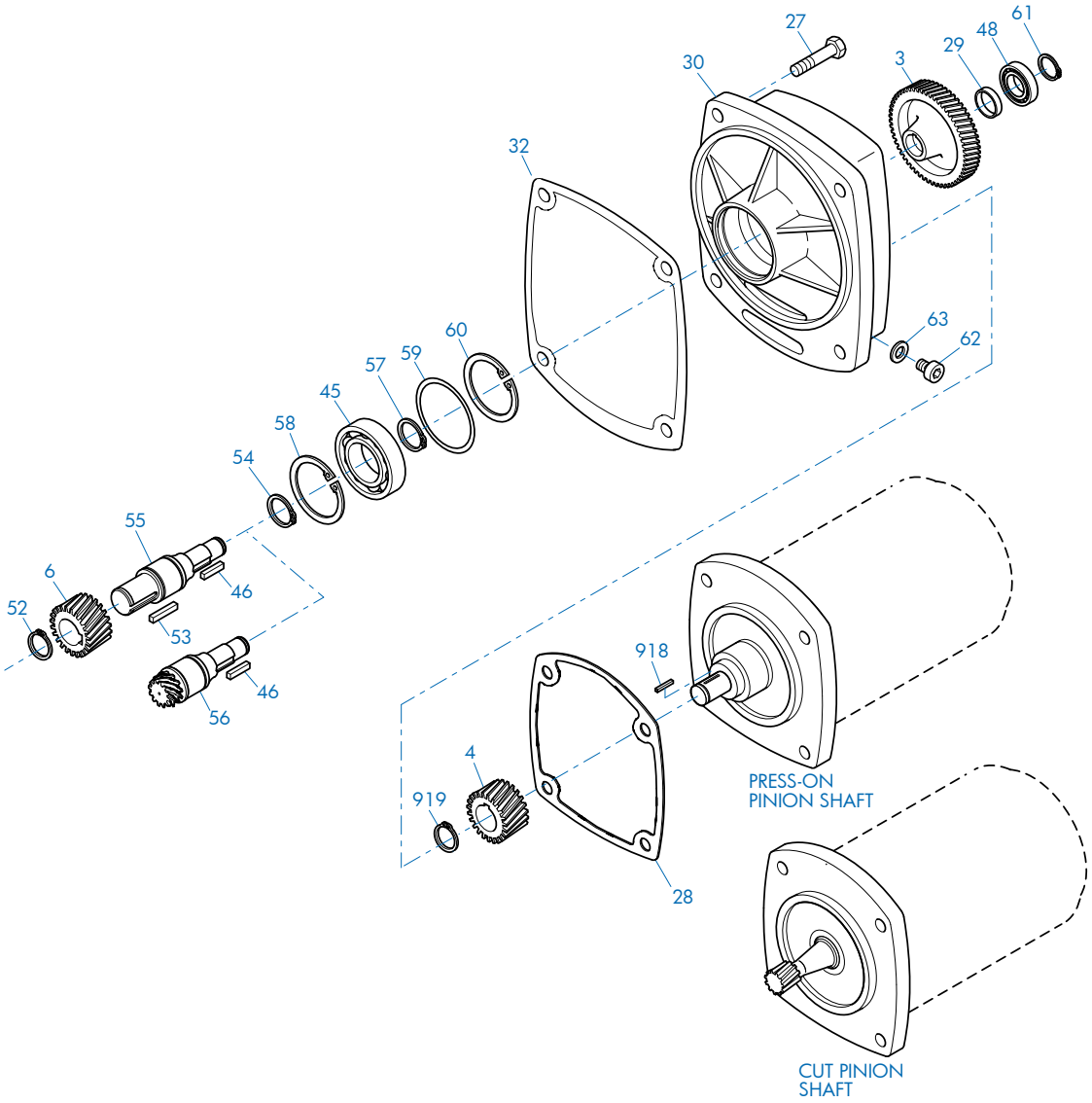


| | | | | | |
|---|---|---|---|---|---|
| 3 | Gear | 46 | Key | 59 | Shim |
| 4 | Pinion | 48 | Anti-Friction Bearing | 60 | Snap Ring |
| 6 | Pinion | 52 | Snap Ring | 61 | Snap Ring |
| 27 | Bolt | 53 | Key | 62 | Oil Plug |
| 28 | Gasket | 54 | Snap Ring | 63 | Gasket |
| 29 | Spacer | 55 | Intermediate Shaft, Plain | 918 | Key |
| 30 | Third Reduction Gearcase | 56 | Intermediate Shaft, Gearcut | 919 | Snap Ring |
| 32 | Gasket | 57 | Snap Ring | | |
| 45 | Anti-Friction Bearing | 58 | Snap Ring | | |

SERVICE


Send Quote Requests to info@automatedpt.com
Call +1(800)985-6929 To Order or Order Online At Nordgearmotors.com

Send Quote Requests to info@automatedpt.com
Call +1(800)985-6929 To Order or Order Online At Nordgearmotors.com



## Input Multi-stage Reduction

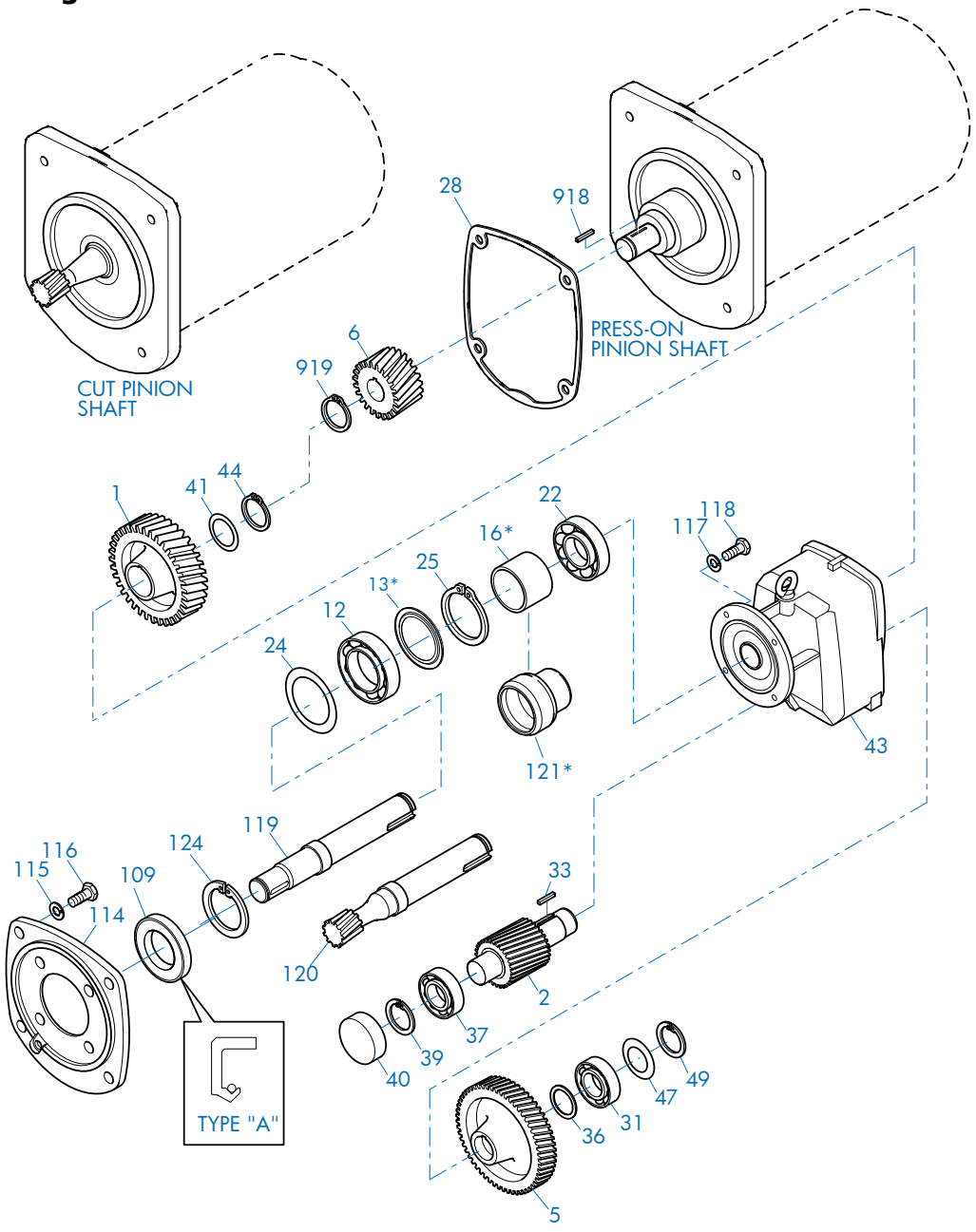


| | | | | | |
|---|---|---|---|---|---|
| 1 | Gear | 33 | Key | 115 | Lock Washer |
| 2 | Pinion Shaft | 36 | Spacer | 116 | Bolt |
| 5 | Gear | 37 | Anti-Friction Bearing | 117 | Lock Washer |
| 6 | Pinion | 39 | Snap Ring | 118 | Bolt |
| 12 | Anti-Friction Bearing | 40 | Bore Plug | 119 | Intermediate Shaft, Plain |
| 13 | Nilos Ring* | 41 | Shim | 120 | Intermediate Shaft, Gearcut |
| 16 | Spacer* | 43 | Gearcase | 121 | Bearing Sleeve* |
| 22 | Anti-Friction Bearing | 44 | Snap Ring | 124 | Snap Ring |
| 24 | Shim | 47 | Shim | 918 | Key |
| 25 | Snap Ring | 49 | Snap Ring | 919 | Snap Ring |
| 28 | Gasket | 109 | Oil Seal | | |
| 31 | Anti-Friction Bearing | 114 | Intermediate Flange | | |

SERVICE



Send Quote Requests to info@automatedpt.com
Call +1(800)985-6929 To Order or Order Online At Nordgearmotors.com

Send Quote Requests to info@automatedpt.com
Call +1(800)985-6929 To Order or Order Online At Nordgearmotors.com

# Parts Lists

DRIVESYSTEMS

## Small Frame Motor

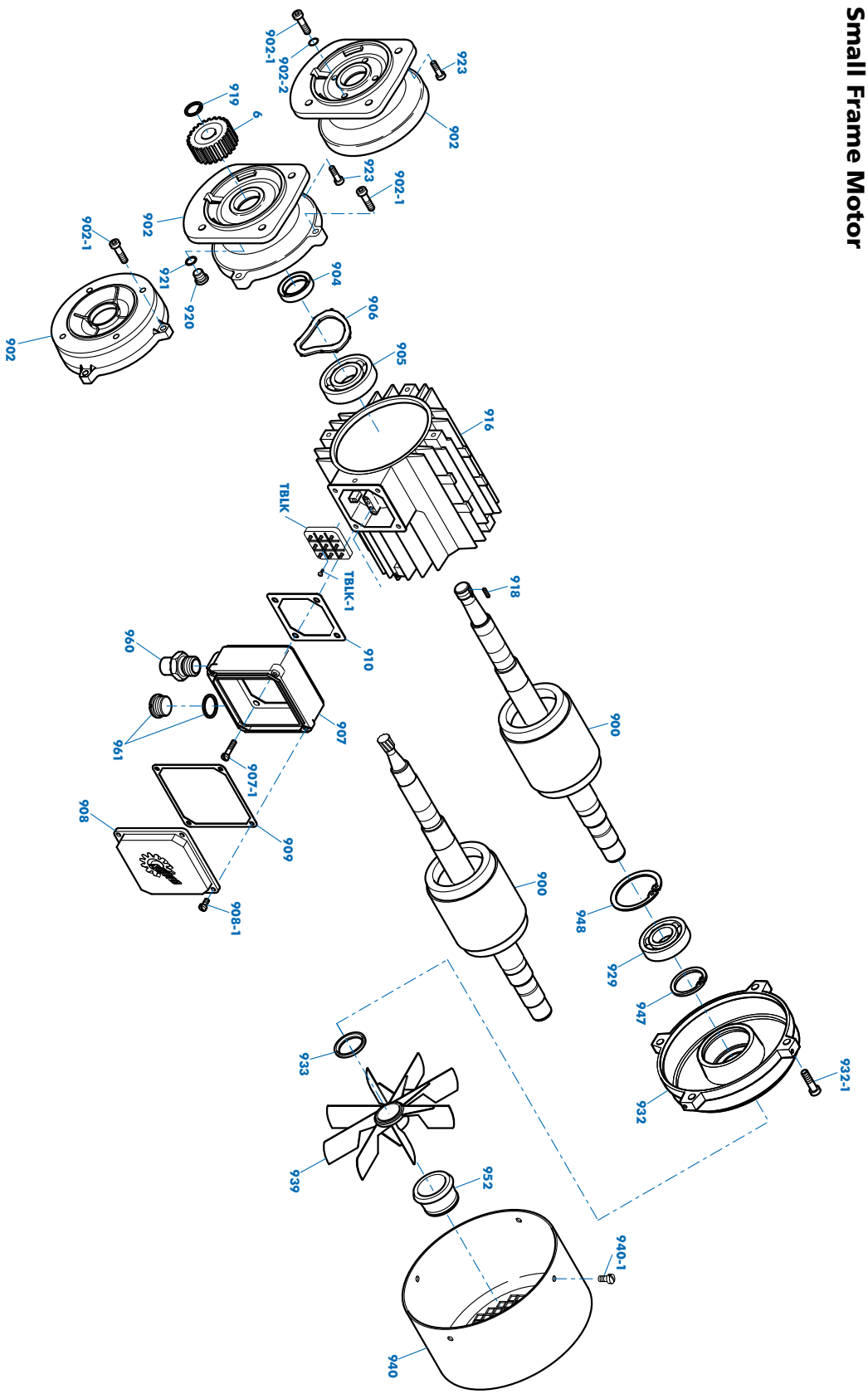


| | | | | | |
|---|---|---|---|---|---|
| 6 | Pinion | 907-1 | Bolt | 921 | Gasket |
| 900 | Rotor With Shaft | 908 | Terminal Box Cover | 923 | Bolt |
| 902 | End Shield A | 908-1 | Bolt | 929 | Bearing B |
| 902-1 | Bolt | 909 | Terminal Box Cover Gasket | 932 | End Shield B |
| 902-2 | Gasket | 910 | Terminal Box Frame Gasket | 932-1 | Bolt |
| 904 | Oil Seal | 916 | Stator | 933 | Oil Seal |
| 905 | Bearing A | 918 | Key | 939 | Fan |
| 906 | Shim | 919 | Snap Ring | 940 | Fan Cover |
| 907 | Terminal Box Frame | 920 | Oil Plug | 940-1 | Screw |

| | | | |
|---|---|---|---|
| 947 | Snap Ring | TBLK | Terminal Block |
| 948 | Snap Ring | TBLK-1 | Terminal block screw |
| 952 | Fan Clip | | |
| 960 | NPT Adapter | | |
| 961 | Plug & Gasket | | |

SERVICE


Send Quote Requests to info@automatedpt.com
Call +1(800)985-6929 To Order or Order Online At Nordgearmotors.com

Send Quote Requests to info@automatedpt.com
Call +1(800)985-6929 To Order or Order Online At Nordgearmotors.com



## Large Frame Motor

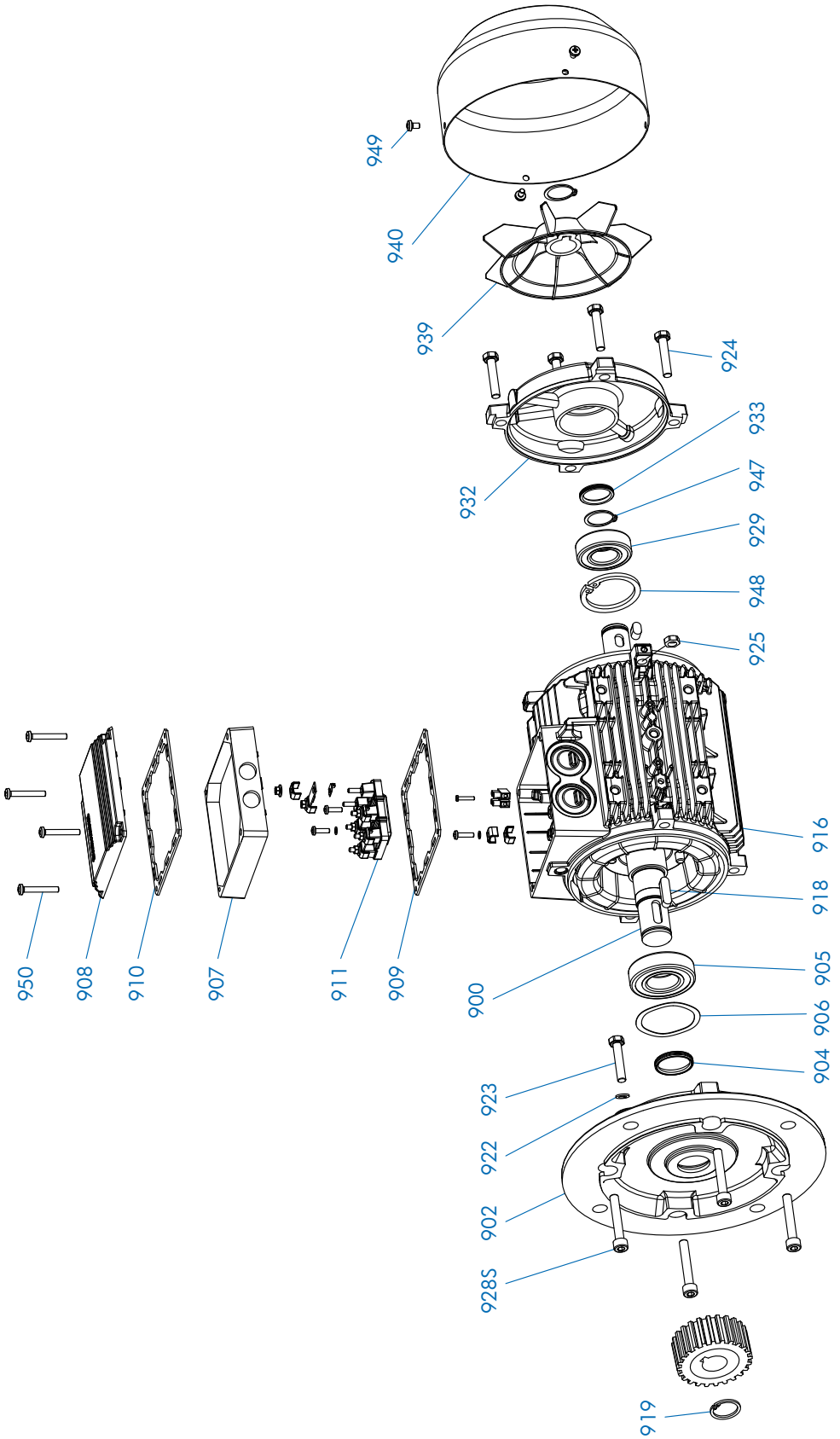


| | | | | | |
|---|---|---|---|---|---|
| 900 | Rotor With Shaft | 909 | Terminal Box Frame Gasket | 923 | Bolt |
| 902 | End Shield A | 910 | Terminal Box Cover Gasket | 924 | Bolt |
| 904 | Oil Seal | 911 | Terminal Board | 925 | Hexagon Nut |
| 905 | Bearing A | 916 | Stator | 928S | Bolt |
| 906 | Shim | 918 | Key | 929 | Bearing B |
| 907 | Terminal Box Frame | 919 | Snap Ring | 932 | End Shield B |
| 908 | Terminal Box Cover | 922 | Lock Washer | 933 | Oil Seal |
| | | | | 939 | Fan |
| | | | | 940 | Fan Cover |
| | | | | 947 | Snap Ring |
| | | | | 948 | Snap Ring |
| | | | | 949 | Screw |
| | | | | 950 | Bolt |

SERVICE



Send Quote Requests to info@automatedpt.com
Call +1(800)985-6929 To Order or Order Online At Nordgearmotors.com

Send Quote Requests to info@automatedpt.com
Call +1(800)985-6929 To Order or Order Online At Nordgearmotors.com

# Parts Lists

## Input NEMA

**56C**
**140TC**
**180TC**

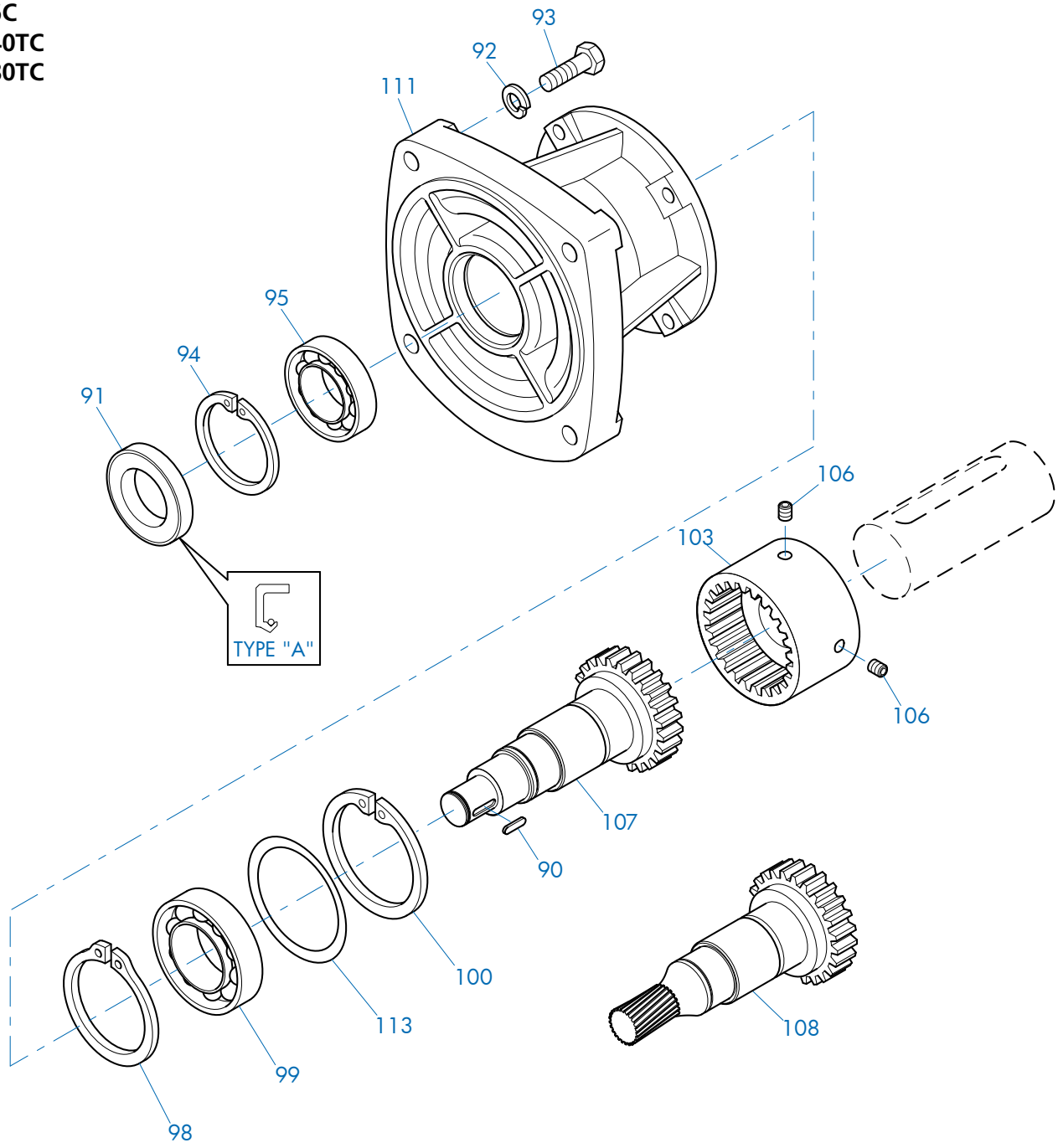


| | | | | | |
|---|---|---|---|---|---|
| 90 | Key | 95 | Anti-Friction Bearing | 106 | Set Screw |
| 91 | Oil Seal | 98 | Snap Ring | 107 | Input Shaft, Plain |
| 92 | Lock Washer | 99 | Anti-Friction Bearing | 108 | Input Shaft, Gearcut |
| 93 | Bolt | 100 | Snap Ring | 111 | NEMA Adapter |
| 94 | Snap Ring | 103 | Coupling | 113 | Shim |

SERVICE


Send Quote Requests to info@automatedpt.com
Call +1(800)985-6929 To Order or Order Online At Nordgearmotors.com

Send Quote Requests to info@automatedpt.com
Call +1(800)985-6929 To Order or Order Online At Nordgearmotors.com



## Input NEMA

**180TC**
**210TC**
**250TC**
**280TC**

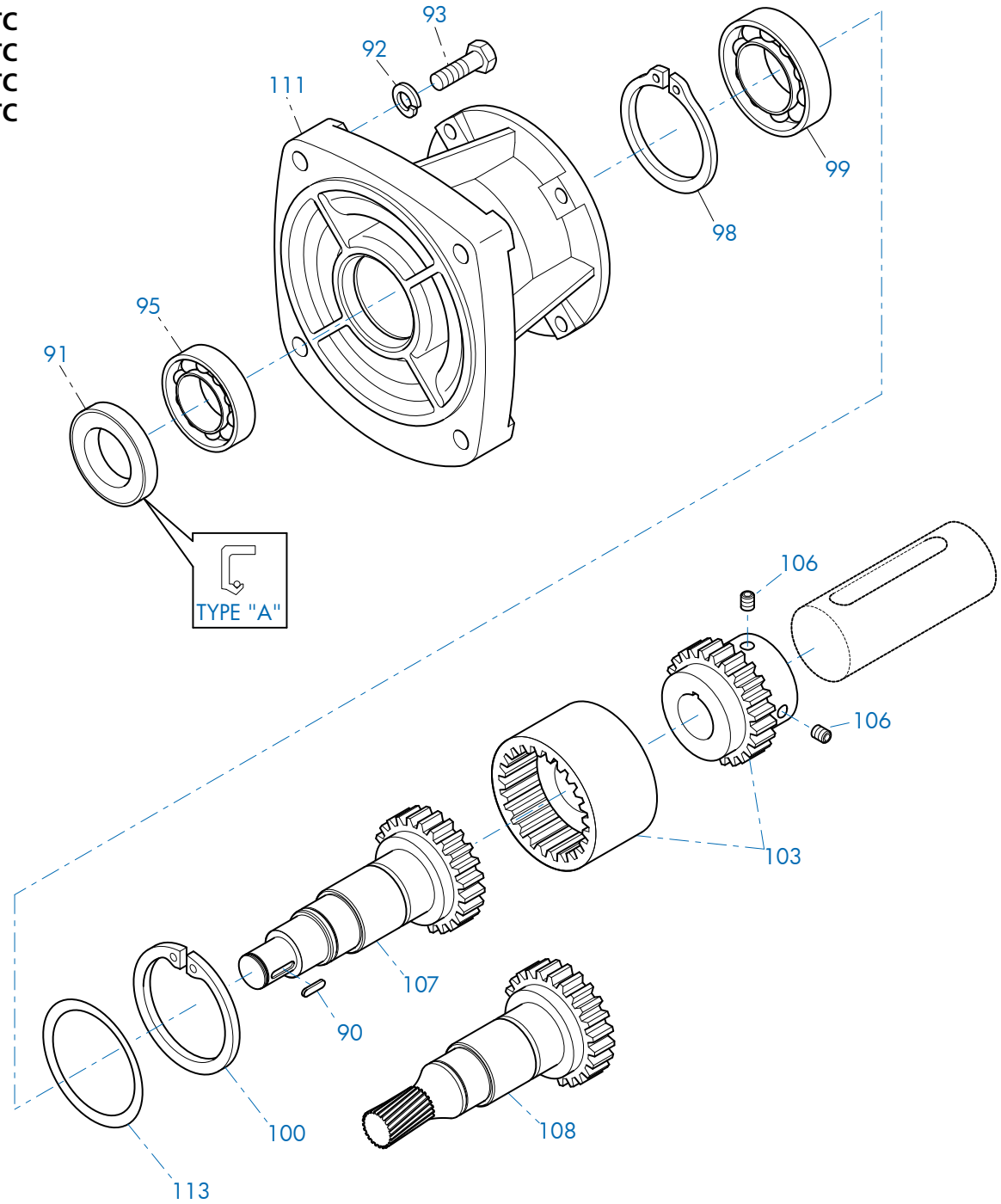


| | | | | | |
|---|---|---|---|---|---|
| 90 | Key | 98 | Snap Ring | 107 | Input Shaft, Plain |
| 91 | Oil Seal | 99 | Anti-Friction Bearing | 108 | Input Shaft, Gearcut |
| 92 | Lock Washer | 100 | Snap Ring | 111 | NEMA Adapter |
| 93 | Bolt | 103 | Coupling | 113 | Shim |
| 95 | Anti-Friction Bearing | 106 | Set screw | | |

SERVICE


Send Quote Requests to info@automatedpt.com
Call +1(800)985-6929 To Order or Order Online At Nordgearmotors.com

Send Quote Requests to info@automatedpt.com
Call +1(800)985-6929 To Order or Order Online At Nordgearmotors.com

# Parts Lists

## Input NEMA

**250TC**
**280TC**
**320TC**
**360TC**

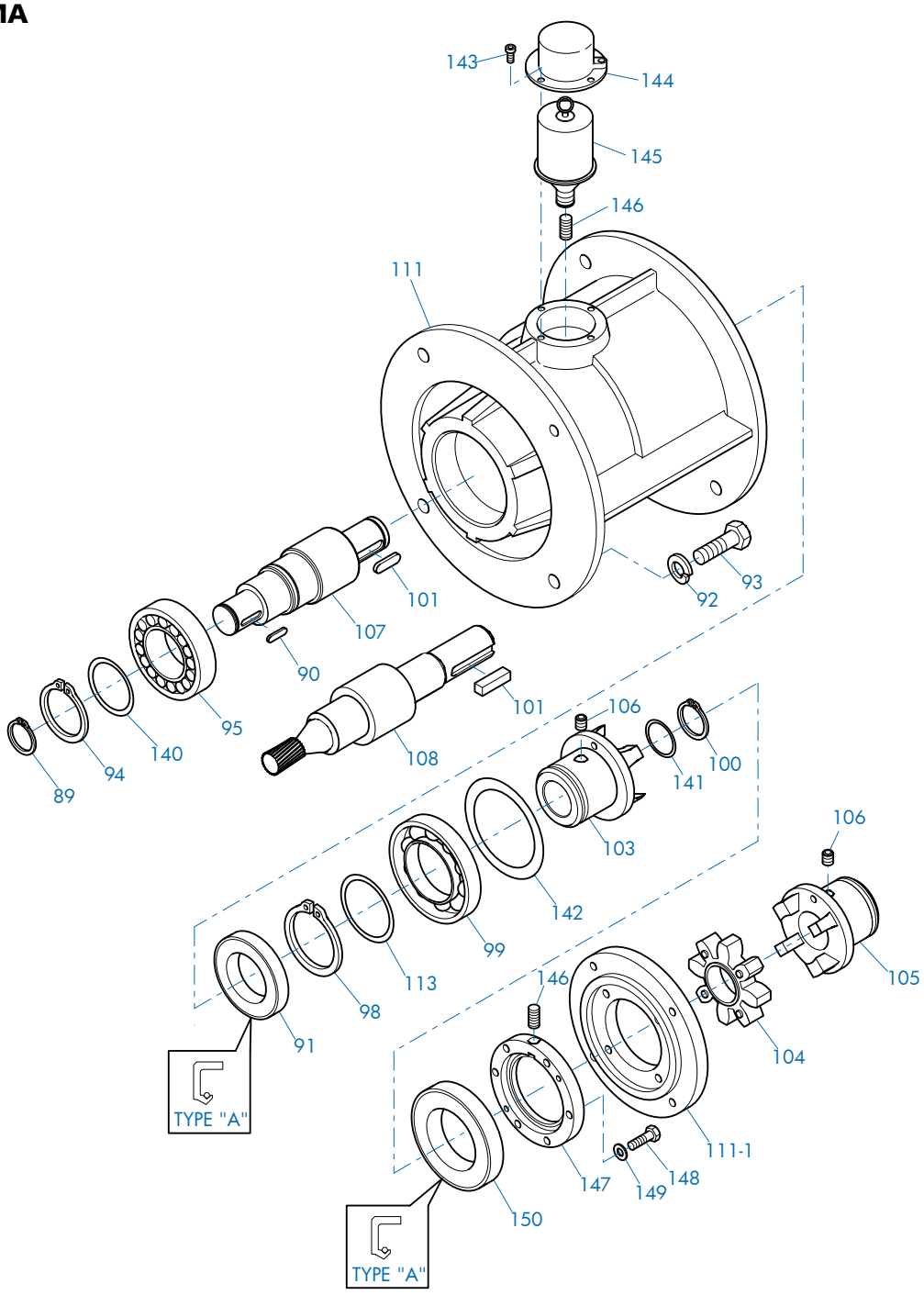


| | | | | | | | |
|---|---|---|---|---|---|---|---|
| 89 | Snap Ring | 99 | Anti-Friction Bearing | 108 | Input Shaft, Gearcut | 144 | Cover |
| 90 | Key | 100 | Snap Ring | 111 | NEMA Adapter | 145 | Automatic Lubricator |
| 91 | Oil Seal | 101 | Key | 111-1 | Adapter Plate | 146 | Adapter |
| 92 | Lock Washer | 103 | Coupling Half | 113 | Shim | 147 | Bearing Cover |
| 93 | Bolt | 104 | Coupling Spider | 140 | Shim | 148 | Bolt |
| 94 | Snap Ring | 105 | Coupling Half | 141 | Shim | 149 | Lock Washer |
| 95 | Anti-Friction Bearing | 106 | Set Screw | 142 | Shim | 150 | Oil Seal |
| 98 | Snap Ring | 107 | Input Shaft, Plain | 143 | Bolt | | |

SERVICE


Send Quote Requests to info@automatedpt.com
Call +1(800)985-6929 To Order or Order Online At Nordgearmotors.com

Send Quote Requests to info@automatedpt.com
Call +1(800)985-6929 To Order or Order Online At Nordgearmotors.com



## Input W

**SK 02 - SK 52**
**SK 03 - SK 63**
**SK 0182NB - SK 6382**
**SK 02040 - SK 42125**
**SK 13050 - SK 43125**
**SK 92072 - SK 92772**
**SK 9012.1 - SK 9052.1**
**SK 9013.1 - SK 9053.1**

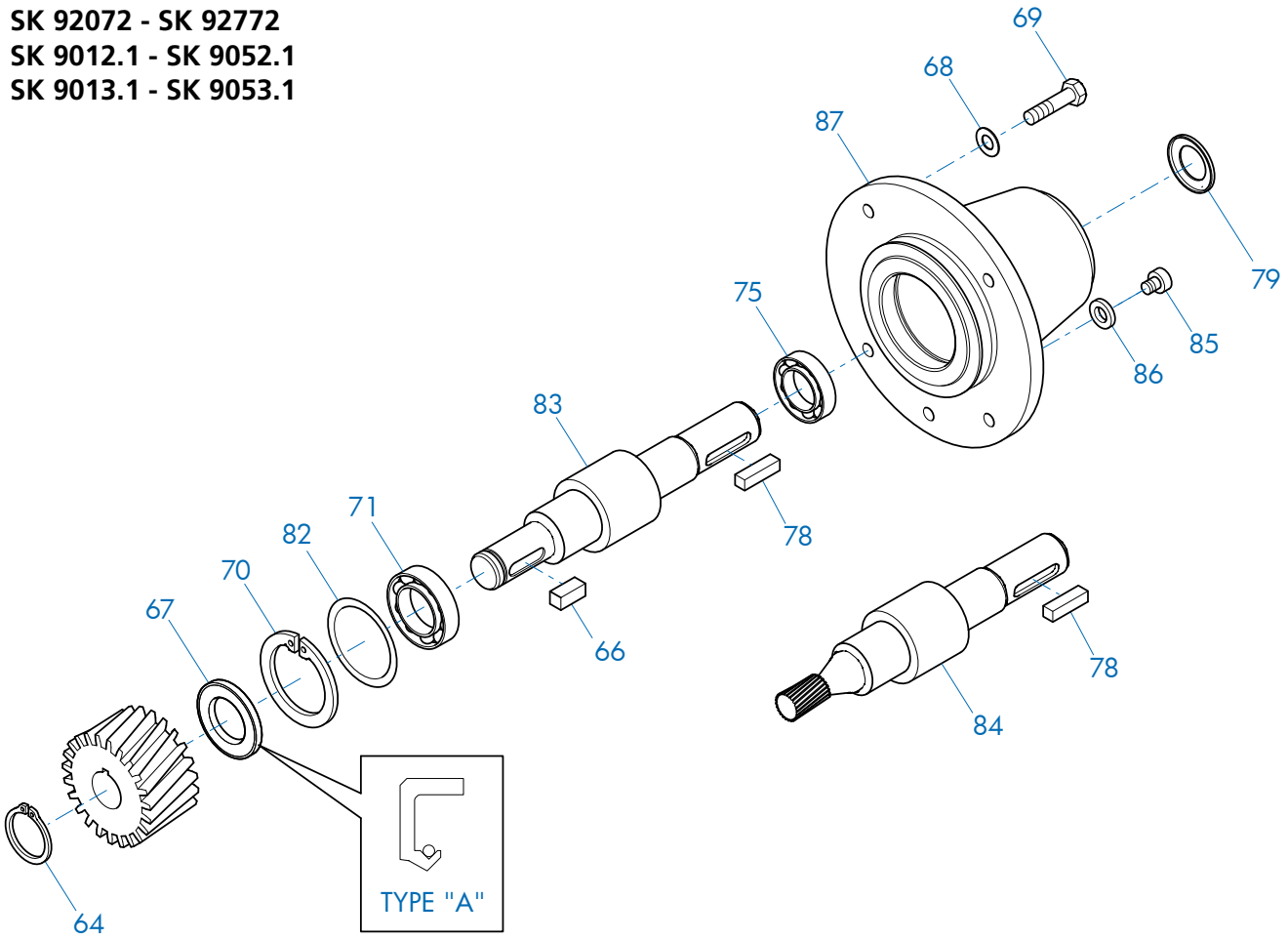


SERVICE

| | | | | | |
|---|---|---|---|---|---|
| 64 | Snap Ring | 71 | Input Shaft Bearing | 84 | Input Shaft, Gearcut |
| 66 | Key | 75 | Input Shaft Bearing | 85 | Oil plug |
| 67 | Oil Seal | 78 | Key | 86 | Gasket |
| 68 | Lock Washer | 79 | Oil Flinger | 87 | W-Input Housing |
| 69 | Bolt | 82 | Shim | | |
| 70 | Snap Ring | 83 | Input Shaft, Plain | | |


Send Quote Requests to info@automatedpt.com
Call +1(800)985-6929 To Order or Order Online At Nordgearmotors.com

Send Quote Requests to info@automatedpt.com Call +1(800)985-6929 To Order or Order Online At Nordgearmotors.com

# Parts Lists

## Input W

**SK 62 - SK 72**
**SK 73 - SK 93**
**SK 6282 - SK 7282**
**SK 7382 - SK 9382**
**SK 9062**

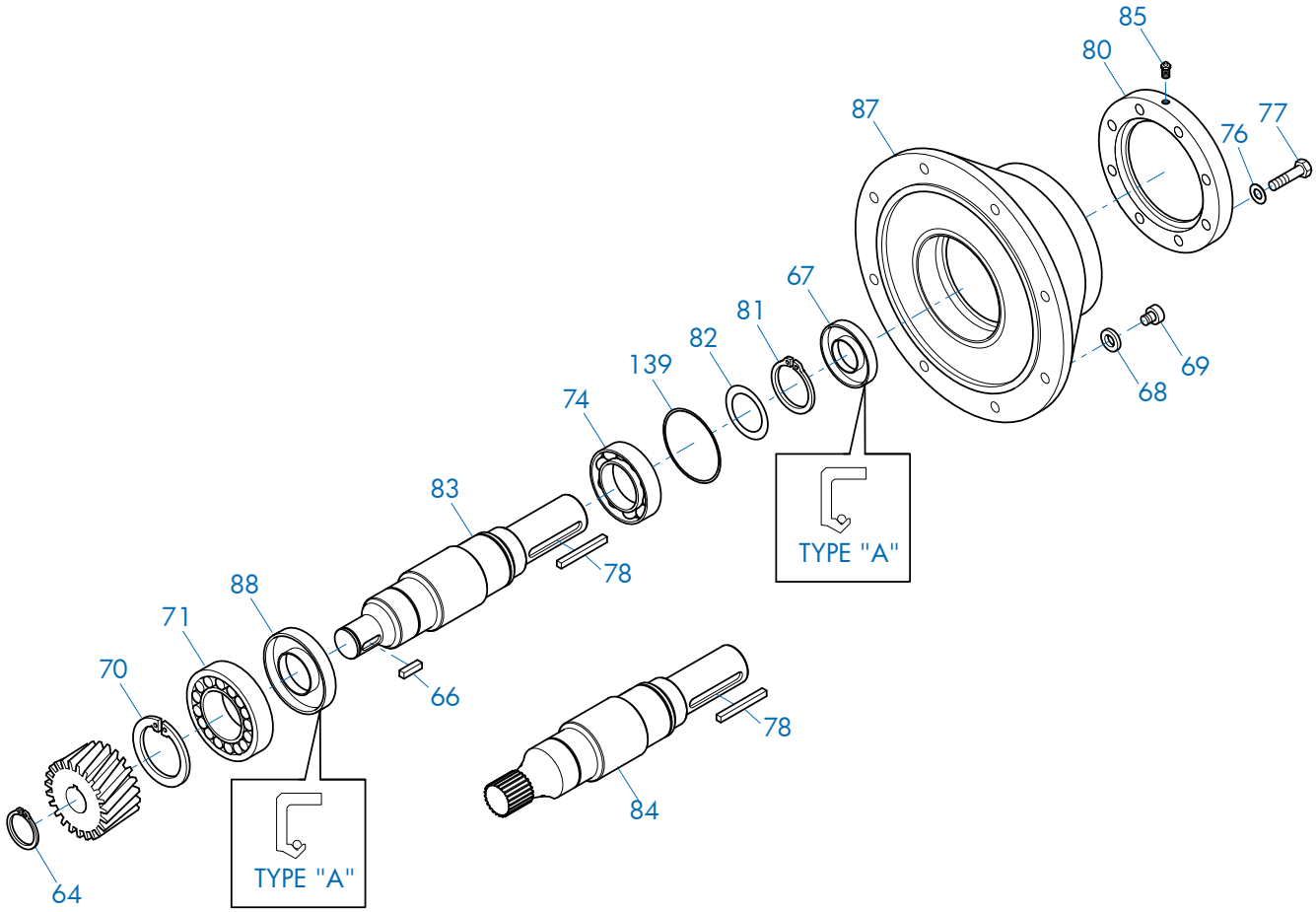


SERVICE

| | | | | | | | |
|---|---|---|---|---|---|---|---|
| 64 | Snap Ring | 70 | Snap Ring | 78 | Key | 84 | Input Shaft, Gearcut |
| 66 | Key | 71 | Anti-Friction Bearing | 80 | Bearing Cover | 85 | Grease Fitting |
| 67 | Oil Seal | 74 | Anti-Friction Bearing | 81 | Snap Ring | 87 | W-Input Housing |
| 68 | Lock Washer | 76 | Lock Washer | 82 | Shim | 88 | Oil Seal |
| 69 | Bolt | 77 | Bolt | 83 | Input Shaft, Plain | 139 | Shim |


Send Quote Requests to info@automatedpt.com
Call +1(800)985-6929 To Order or Order Online At Nordgearmotors.com

Send Quote Requests to info@automatedpt.com
Call +1(800)985-6929 To Order or Order Online At Nordgearmotors.com



## Input W

**SK 82 - SK 102**
**SK 103**
**SK 8282 - SK 9282**
**SK 9082 - SK 9092**

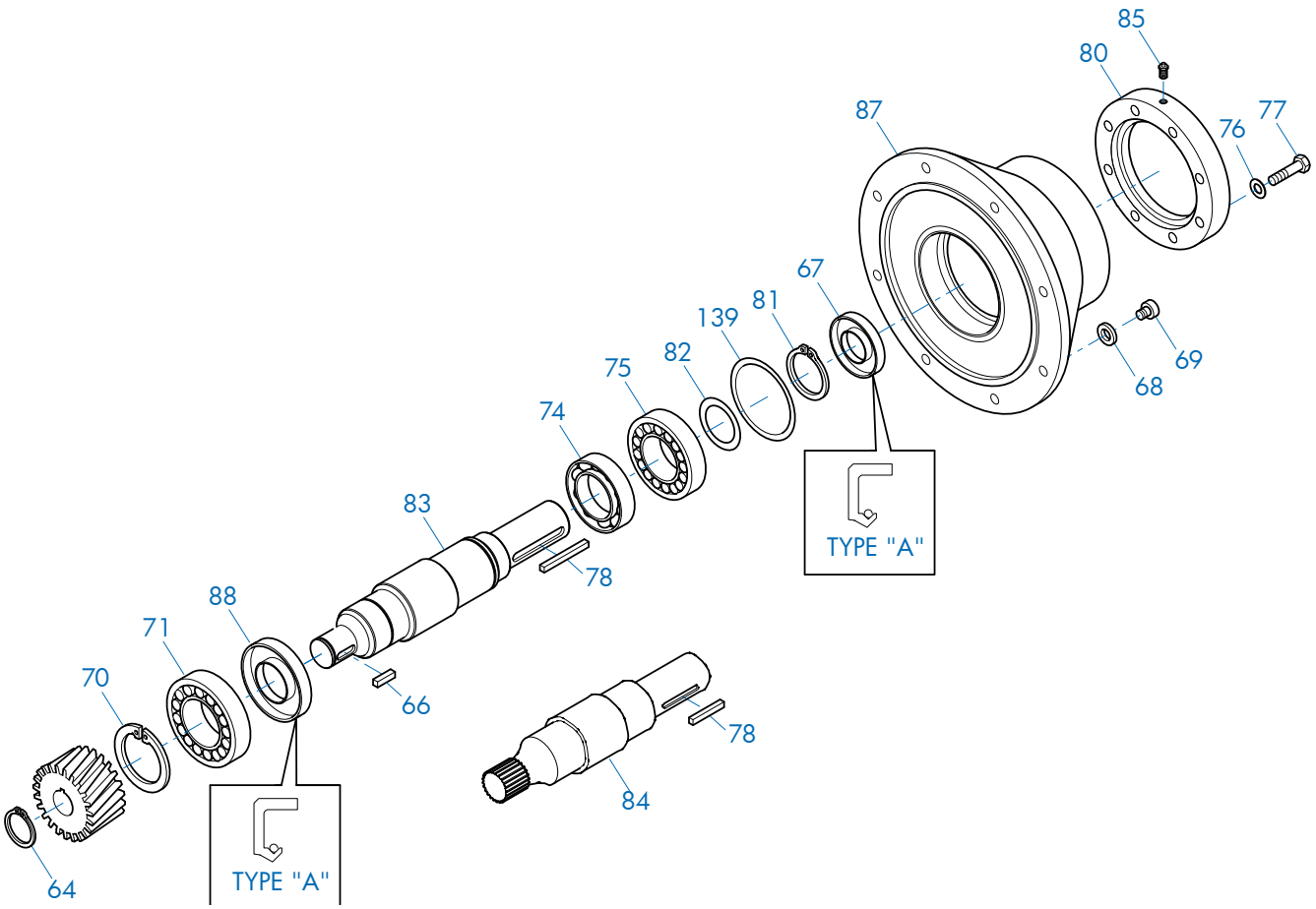


| | | | | | | | |
|---|---|---|---|---|---|---|---|
| 64 | Snap Ring | 71 | Anti-Friction Bearing | 80 | Bearing Cover | 87 | W-Input Housing |
| 66 | Key | 74 | Anti-Friction Bearing | 81 | Snap Ring | 88 | Oil Seal |
| 67 | Oil Seal | 75 | Input Shaft Bearing | 82 | Shim | 139 | Shim |
| 68 | Lock Washer | 76 | Lock Washer | 83 | Input Shaft, Plain | | |
| 69 | Bolt | 77 | Bolt | 84 | Input Shaft, Gearcut | | |
| 70 | Snap Ring | 78 | Key | 85 | Grease Fitting | | |


Send Quote Requests to info@automatedpt.com
Call +1(800)985-6929 To Order or Order Online At Nordgearmotors.com

Send Quote Requests to info@automatedpt.com
Call +1(800)985-6929 To Order or Order Online At Nordgearmotors.com

# Parts Lists

## Input W

### SK 10282 - SK 12382

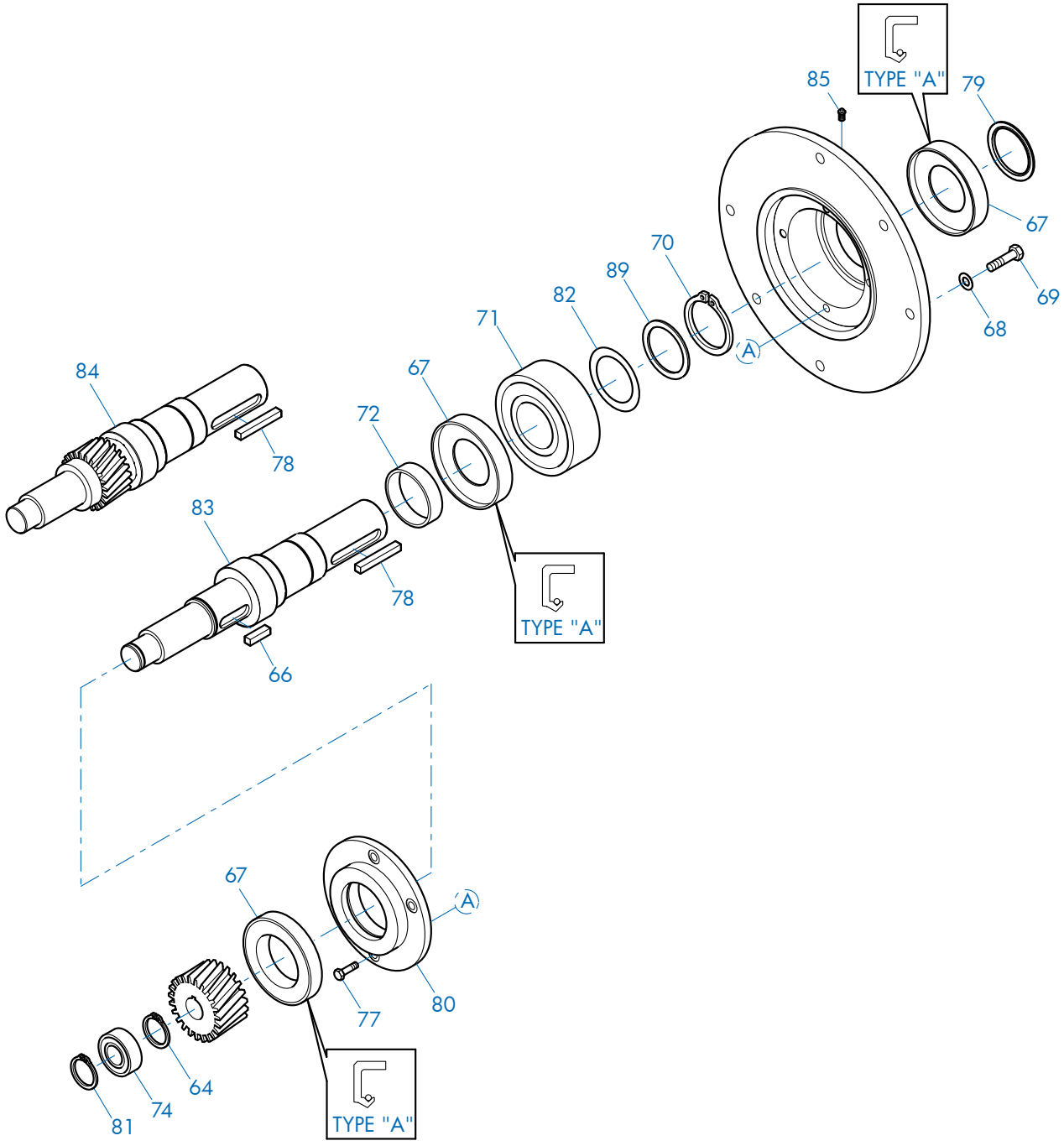


| | | | | | | | |
|---|---|---|---|---|---|---|---|
| 64 | Snap Ring | 70 | Snap Ring | 78 | Key | 83 | Input Shaft, Plain |
| 66 | Key | 71 | Anti-Friction bearing | 79 | Oil Flinger | 84 | Input Shaft, Gearcut |
| 67 | Oil Seal | 72 | Spacer | 80 | Bearing Cover | 85 | Grease Fitting |
| 68 | Lock Washer | 74 | Anti-Friction Bearing | 81 | Snap Ring | 89 | Thrust Washer |
| 69 | Bolt | 77 | Bolt | 82 | Shim | | |


Send Quote Requests to info@automatedpt.com
Call +1(800)985-6929 To Order or Order Online At Nordgearmotors.com

# Products & Key Features

## Products & Key Features

- Company Overview
- In-line
- Nordbloc
- Clincher™ Shaft Mount
- 92 Bevel
- 90.1 Bevel
- Helical-worm
- Minicase
- Flexbloc
- Motors
- Trio
- SK 500E
- SK 700E
- Vector MC
- Nordisc™
- Titan™
- Key Features

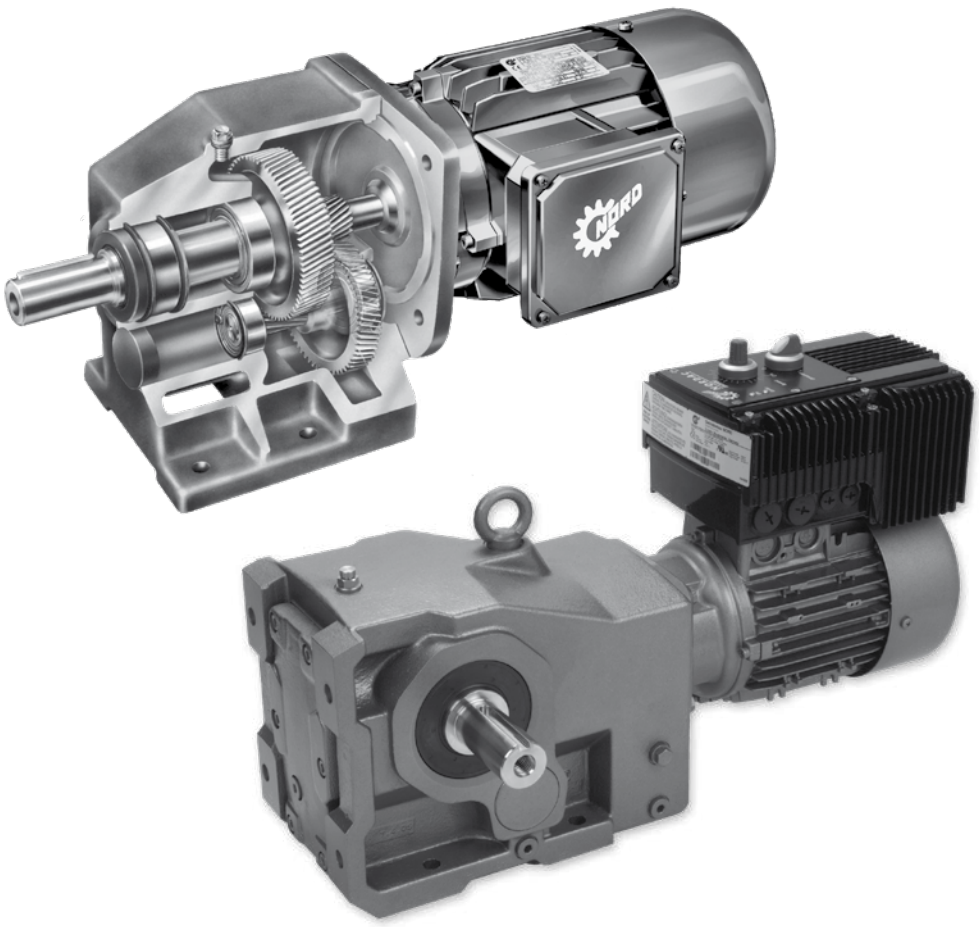

NORD® DRIVESYSTEMS

www.nord.com



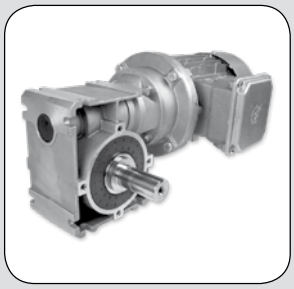

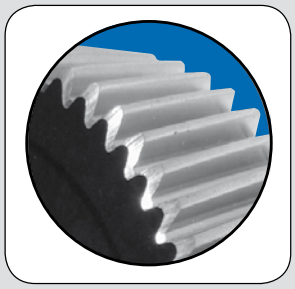

Send Quote Requests to info@automatedpt.com Call +1(800)985-6929 To Order or Order Online At Nordgearmotors.com

# Product Overview

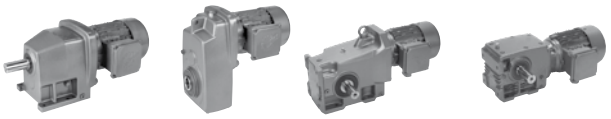

## Company Overview

Since 1965, NORD Gear has grown to global proportions on the strength of product performance, superior customer service, and intelligent solutions to a never-ending variety of industrial challenges.

All mechanical and electrical components of a drive are available from NORD Gear. Our products cover the full range of drive equipment: helical in-line, Clincher™ shaft-mount, helical-bevel, and helical-worm gearboxes from 1/6 hp to 250 hp, with torques from 90 lb-in to 900,000 lb-in.

But NORD Gear does far more than manufacture the world's finest drive components. We provide our customers with optimum drive configurations for their specific purposes, providing each and every one of them with truly complete and efficient systems at a price/quality ratio unmatched in today's fast-changing markets.

NORD Gear makes its wide range of products easily available through a global network that provides all customers with prompt delivery and expert support services to consistently exceed customer expectations. We are firmly committed to being totally responsive to the ideas and specifications of every customer, anywhere in the world.

## In-line "Helical" Reducers (Section B)

**Power** : 0.16 – 200 hp
**Torque**: up to 205,000 lb-in
**Sizes** : 11 case sizes

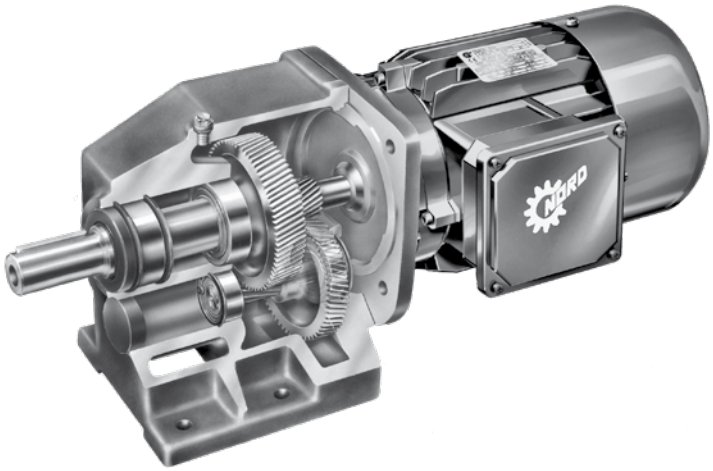

### Features

- Foot or Flange Mount
- 1/6 to 200 hp
- Torque up to 205,000 lb-in
- Output speeds from 0.1 to 960 rpm
- Gear ratios from 1.82:1 to over 300,000:1
- Up to 98.5% efficient
- Ideal for pumps and conveyors
- Eliminates belts and chains

| Reductions | Ratio Range | | |
|---|---|---|---|
| Single | 1.24:1 | – | 14.80:1 |
| Double | 2.76:1 | – | 105.08:1 |
| Triple | 13.30:1 | – | 1071.82:1 |
| Quadruple | 82.39:1 | – | 2798.93:1 |
| Quintuple | 106.25:1 | – | 3560.53:1 |
| Sextuple | 1604.04:1 | – | 14340.31:1 |




Send Quote Requests to info@automatedpt.com
Call +1(800)985-6929 To Order or Order Online At Nordgearmotors.com

Send Quote Requests to info@automatedpt.com Call +1(800)985-6929 To Order or Order Online At Nordgearmotors.com



## NORDBLOC (Catalog G1011 or G1012)

**Power** : 0.16 – 50 hp
**Torque**: up to 28,320 lb-in
**Sizes** : 11 case sizes

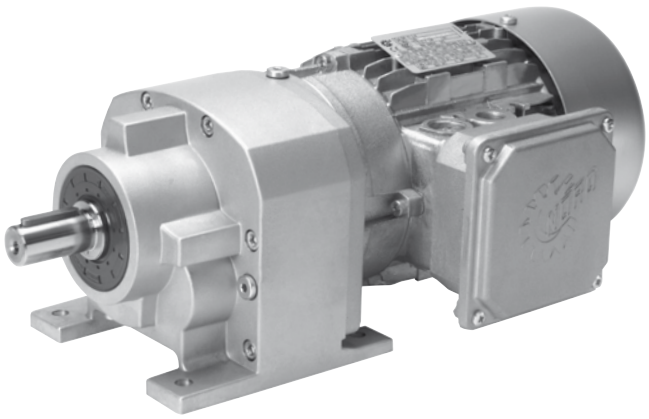

### Features

- Foot or Flange Mount
- 1/6 to 50 hp
- Torque up to 26,550 lb-in
- Output speeds from 4.8 to 900 rpm
- Gear ratios from 1.88:1 to over 370:1
- Up to 97% efficient
- High torque in a small package
- Replaces most European designs

| Reductions | Ratio Range | | |
|---|---|---|---|
| Double | 2.12:1 | – | 81.45:1 |
| Triple | 17.42:1 | – | 402.8:1 |

## CLINCHER™ Offset Parallel "Shaft Mount" Reducers (Section C)

**Power** : 0.16 – 200 hp
**Torque**: up to 769,000 lb-in
**Sizes** : 13 case sizes

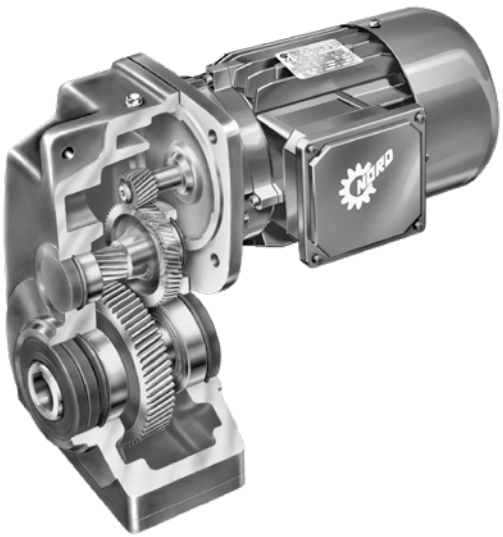

### Features

- Shaft, Foot or Flange Mount
- Solid or hollow shaft
- 1/6 to 200 hp
- Torque up to 797,000 lb-in
- Output speeds from 0.1 to 410 rpm
- Gear ratios from 4.26:1 to over 300,000:1
- More than 50 ratios per case size
- Up to 97% efficient
- Excellent for conveyor and travel drives
- Heavy-duty bearings for vertical mixers
- Integral motor eliminates belts and motor platform

| Reductions | Ratio Range | | |
|---|---|---|---|
| Double | 4.03:1 | – | 155.40:1 |
| Triple | 16.28:1 | – | 1585.08:1 |
| Quadruple | 87.73:1 | – | 3608.19:1 |
| Quintuple | 159.73:1 | – | 6616.79:1 |




Send Quote Requests to info@automatedpt.com
Call +1(800)985-6929 To Order or Order Online At Nordgearmotors.com

# Product Overview

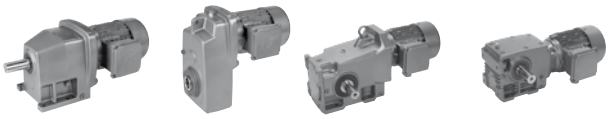

## 92 Series Bevel (Section D)

**Power**: 0.16 – 7.5 hp
**Torque**: up to 5,840 lb-in
**Sizes**: 5 case sizes

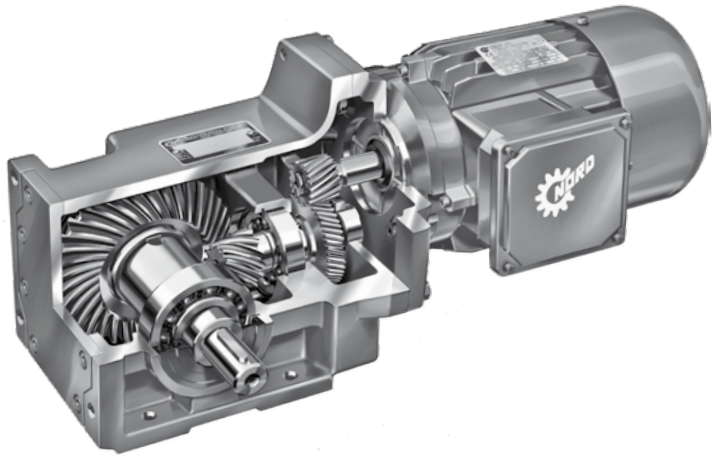

### Features

- Foot, Flange, or Shaft Mount
- Solid or hollow shaft
- 1/6 to 7.5 hp
- Torque up to 5,840 lb-in
- Output speeds from 24 to 360 rpm
- Gear ratios from 4.1:1 to 72:1
- Up to 97% efficient
- Small package size
- Replaces worm drives
- Long-life wear-free gears

| Reductions | Ratio Range | | |
|---|---|---|---|
| Double | 4.1:1 | – | 72:1 |

## 90.1 Bevel (Section D)

**Power** : 0.16 – 200 hp
**Torque**: up to 442,500 lb-in
**Sizes** : 15 case sizes

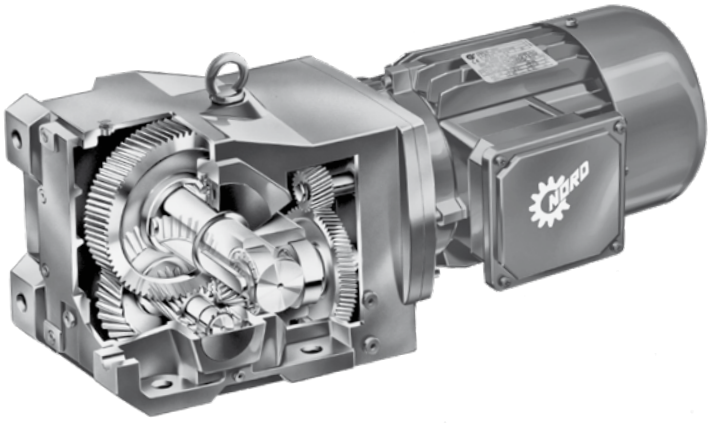

### Features

- Foot, Flange, or Shaft Mount
- Solid or hollow shaft
- 1/6 to 200 hp
- Torque up to 442,500 lb-in
- Output speeds from 0.1 to 218 rpm
- Gear ratios from 8.04:1 to over 300,000:1
- Up to 95% efficient
- Stackable for counter-rotating mixers
- Low backlash
- Long-life wear-free gearing
- Eliminates belts and chains

| Reductions | Ratio Range | | |
|---|---|---|---|
| Double | 4.03:1 | – | 155.40:1 |
| Triple | 16.28:1 | – | 1585.08:1 |
| Quadruple | 87.73:1 | – | 3608.19:1 |
| Quintuple | 159.73:1 | – | 6616.79:1 |




Send Quote Requests to info@automatedpt.com
Call +1(800)985-6929 To Order or Order Online At Nordgearmotors.com

Send Quote Requests to info@automatedpt.com Call +1(800)985-6929 To Order or Order Online At Nordgearmotors.com



## Right-angle "helical-worm" Reducers (Section E)

**Power**: 0.16 – 20 hp
**Torque**: up to 27,000 lb-in
**Sizes**: 6 case sizes

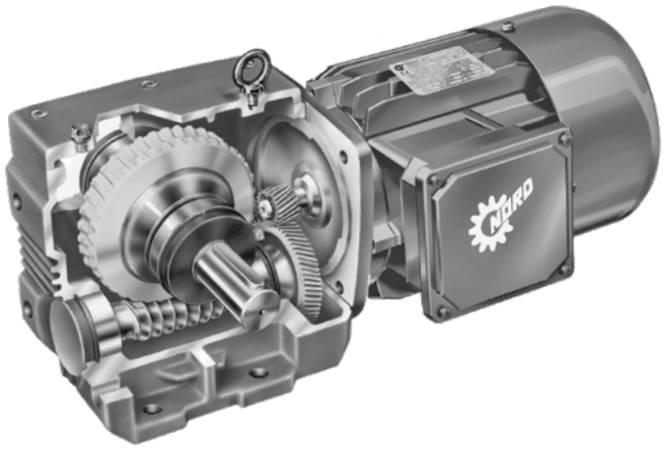

### Features

- Foot, Flange, or Shaft Mount
- Solid or hollow shaft
- 1/6 to 20 hp
- Torque up to 27,585 lb-in
- Output speeds from 0.1 to 398 rpm
- Gear ratios from 4.40:1 to over 300,000:1
- More ratio choices; eliminates belts and chains
- Long-life synthetic oil

| Reductions | Ratio Range | | |
|---|---|---|---|
| Double | 4.40:1 | – | 695.60:1 |
| Triple | 41.74:1 | – | 7095.12:1 |

## Right-angle MINICASE® Worm Reducers (Catalog G1030)

**Power**: 0.16 – 2,0 hp
**Torque**: up to 2,400 lb-in
**Sizes**: 4 case sizes

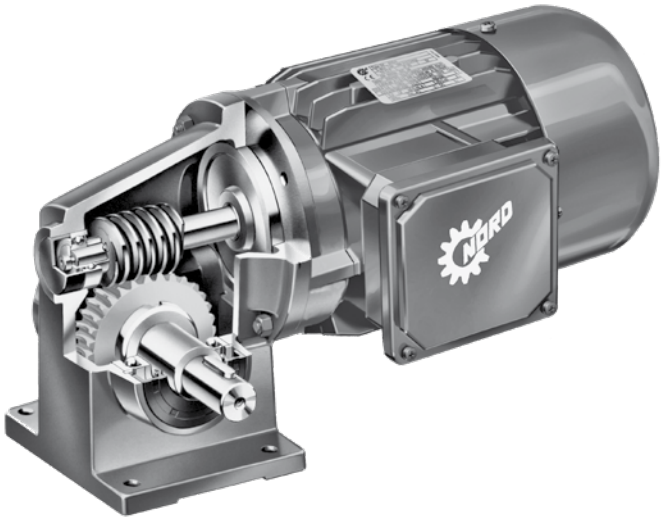

### Features

- Foot, Flange, or Shaft Mount
- Solid or hollow shaft
- 1/6 to 2 hp
- Torque up to 2,390 lb-in
- Output speeds from 3 to 324 rpm
- Gear ratios from 5:1 to over 500:1
- Long-life synthetic oil
- Corrosion resistant
- Paint-free

| Reductions | Ratio Range | | |
|---|---|---|---|
| Double | 5:1 | – | 100:1 |
| Triple | 25:1 | – | 500:1 |




Send Quote Requests to info@automatedpt.com
Call +1(800)985-6929 To Order or Order Online At Nordgearmotors.com

Send Quote Requests to info@automatedpt.com Call +1(800)985-6929 To Order or Order Online At Nordgearmotors.com

# Product Overview



## FLEXBLOC (Catalog G1033)

**Power**: 0.16 – 5 hp
**Torque**: up to 4,683 lb-in
**Sizes**: 5 case sizes

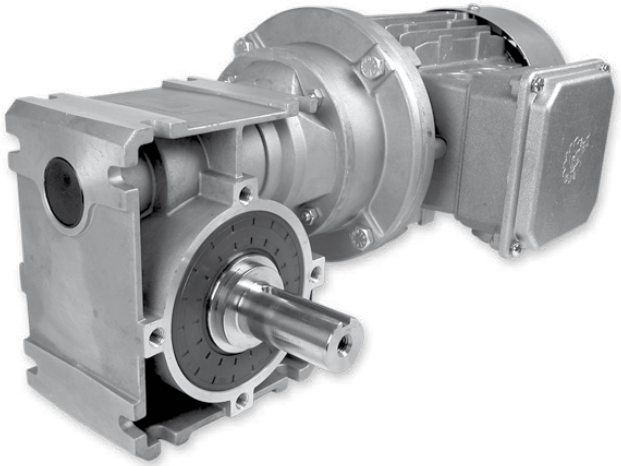

### Features

- Foot, Flange, or Shaft Mount
- Hollow shaft or plug-in solid shaft
- 1/6 to 5 hp
- Torque up to 4,683 lb-in
- Gear ratios from 5, 7.5, 10,… 100,… 3000:1
- UNICASE™ design
- Modular construction
- High-capacity oversized bearings
- Sealed for life
- NEMA C-face with coupling

| Reductions | Sizes | Ratio Range |
|---|---|---|
| Single | 5 | 5.00 :1 – 100:1 |
| Double (helical + worm) | 4 | 50.00:1 – 1000:1 |
| Double Worm | 4 | 150.00:1 – 3000:1 |

## Motors (Section G) and Brakemotors (Section H)

### Features

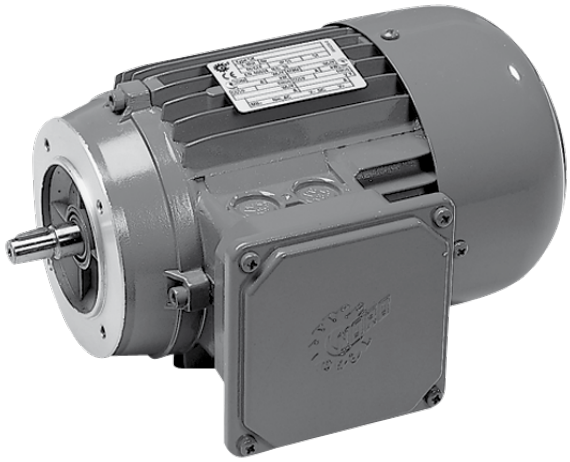

- 1/6 to 200 hp
- Integral brakes
- Inverter/Vector duty
- Standard or energy-efficient designs
- NEMA C-face 56C-215TC
- IEC foot and flange mount
- Long service life
- High start-stop capacity
- Low rotor inertia
- US/Canadian/International voltages and frequencies
- , and approved for worldwide operation

PRODUCT OVERVIEW


Send Quote Requests to info@automatedpt.com
Call +1(800)985-6929 To Order or Order Online At Nordgearmotors.com

Send Quote Requests to info@automatedpt.com
Call +1(800)985-6929 To Order or Order Online At Nordgearmotors.com







## TRIO

### Features

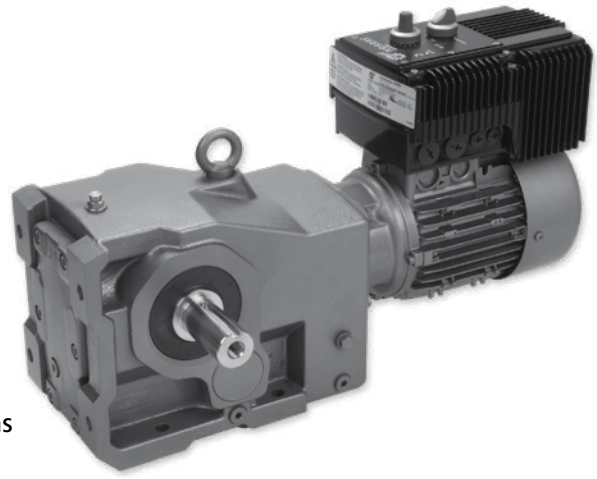

- A speed reducer, integral motor and frequency inverter all fully assembled in one compact package
- SK300E Inverter Models
  - o 200 – 240 VAC 3 Phase 50/60 Hz input ½ through 3 hp
  - o 380 – 480 VAC 3 Phase 50/60 input 3/4 through 5 hp
  - o Full range of built in pre-engineered options
- NORD Inverter/Vector duty motors with full range of options
- UNICASE™ speed reducers with full range of types, ratios and options

| HP | Volts | Phases |
|---|---|---|
| up to 3 | 200-240 | 3 |
| up to 5 | 380-460 | 3 |

## SK 500E

### Features




- Compact, high performance
- 380-480V, 3-phase to 10 hp
- 200-420V, 3-phase to 5 hp
- 200-420V, 1-phase to 3 hp
- 110-120V, 1-phase to 1.5 hp

### SK500E

- ISD – Higher performance sensorless vector control

### SK520E

- Closed-loop flux vector control
- Incremental encoder input
- Added I/O
- CAN bus
- Added RS485 via terminals

### SK530E

- POSICON - Integrated position control

| HP | Volts | Phases |
|---|---|---|
| up to 1.5 | 110-120 | 1 |
| up to 3 | 200-240 | 1 |
| up to 5 | 200-240 | 3 |
| up to 10 | 380-480 | 3 |




Send Quote Requests to info@automatedpt.com
Call +1(800)985-6929 To Order or Order Online At Nordgearmotors.com

Send Quote Requests to info@automatedpt.com
Call +1(800)985-6929 To Order or Order Online At Nordgearmotors.com

# Product Overview

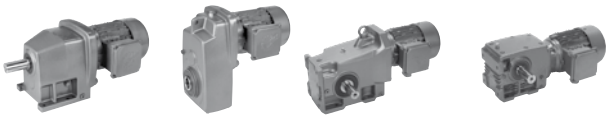

## SK 700E

### Features

- Flexible, high performance
- 380-460V, 3-phase, to 200 hp
- Selectable control modes
  - o V/f for multiple motors
  - o Sensorless vector control
  - o Flux vector control — (requires optional encoder feedback card)
  - o Position control — (requires optional PosiCan card)
- Modular construction with plug-in options
  - o Technology Units
  - o Customer interface Units
  - o Special Extension Units



| HP | Volts | Phases |
|---|---|---|
| up to 200 | 380-460V | 3 |

## Vector MC

The NORDAC™ VECTOR MC combines small size with the features and high-performance formerly reserved for more expensive AC Frequency Inverters. Sensorless vector control (ISD) maximizes torque and response at all speeds and extends the useful output frequency range. The many standard features allow direct use in a wide range of applications and plug-in, pre engineered option modules provide additional frequency.



### Features

- 1/3 through 3 HP at 230 VAC 1 phase input
- 1 through 3 HP at 460 VAC 3 phase input
- Selectable control modes
  - V/f for multiple motors
  - Sensorless vector control to maximize torque & response
- Programmable standard I/O
  - 1 analog input (selectable 0-10 V or 0/4-20 ma)
  - 4 digital inputs (1 with 1.2 msec response)
  - 1 analog output (0-10 V)
  - 2 relay outputs
  - RS485 interface

| HP | Volts | Phases |
|---|---|---|
| up to 2 | 200-230V | 1 |
| up to 3 | 380-460V | 3 |

PRODUCT OVERVIEW


Send Quote Requests to info@automatedpt.com
Call +1(800)985-6929 To Order or Order Online At Nordgearmotors.com

Send Quote Requests to info@automatedpt.com
Call +1(800)985-6929 To Order or Order Online At Nordgearmotors.com





# Product Overview

## NORDISC™ - Traction Drives(Catalog V4000)

**Power**: 0.25 – 7.5 hp
**Torque**: up to 177,000 lb-in

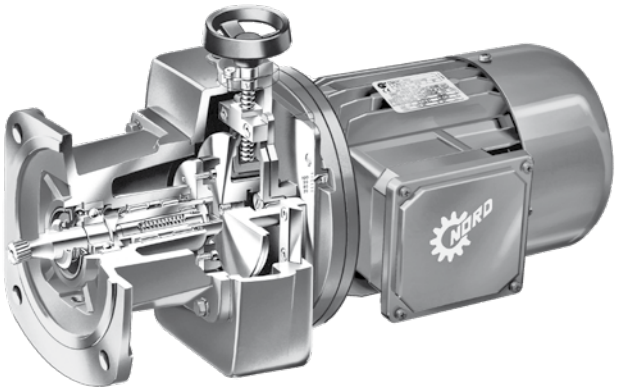

### Features

- Available with NORD integral gear unit
- NEMA C-face motor
- 1/4 to 7.5 hp
- 7:1 adjustable speed range
- Constant torque
- Speed-changing handwheel will not vibrate from set position
- Wear-free adjustment mechanism
- Great for bottling and food processing applications

## TITAN™ Belt Drives(Catalog G4000)

**Power**: 0.25 – 150 hp
**Torque**: up to 442,500 lb-in
**Sizes**: 11 case sizes

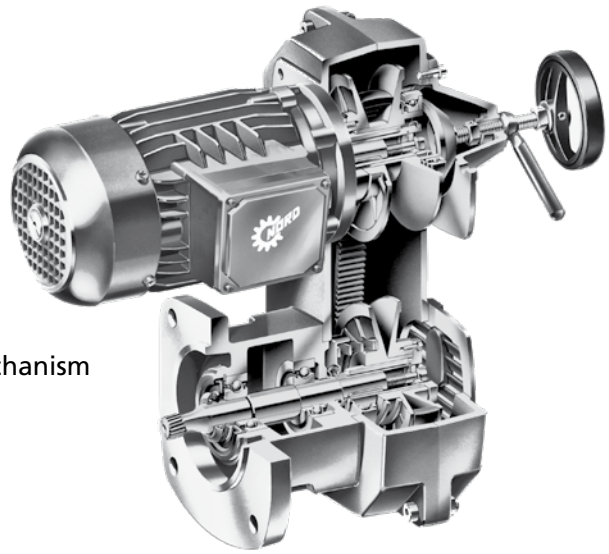

### Features

- 1/4 to 150 hp
- 6:1 adjustable speed range
- U-flow or Z-flow configurations available
- Simple handwheel speed adjustment with locking mechanism
- Static conducting belt
- Split belt case for simple maintenance
- Dufondal groove-resistant pulleys




Send Quote Requests to info@automatedpt.com
Call +1(800)985-6929 To Order or Order Online At Nordgearmotors.com

Send Quote Requests to info@automatedpt.com
Call +1(800)985-6929 To Order or Order Online At Nordgearmotors.com

# Key Features



## UNICASE™ Construction

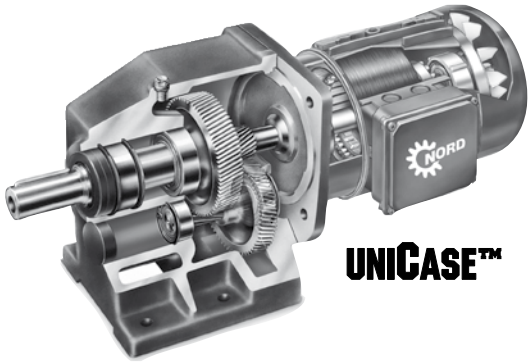


UNICASE™ Construction refers to an overall design concept that allows proper alignment of the gear meshes and the bearings. All of the main drive train components are contained in a one-piece housing. All bearing bores, pilots, and registers of the housing are machined in one set-up. First, the foot or inspection cover is machined. The housing is then positioned from this first cut to machine all remaining features. Specially designed, dedicated fixtures are used to hold the castings rigidly and accurately for machining. This assures positive bearing and gear alignment.

Covers or openings are minimized, reducing the number of potential leak paths, and subsequently the probability of a leak occurring. A standard Failure Effects and Modes Analysis (FEMA) shows that this is the best design. Although this type of design tends to make assembly more difficult, it results in a superior product. Fortunately, NORD has specially designed tools to assure proper, efficient assembly.

All covers and openings are un-stressed access panels, or are positioned with a large pilot diameter. An unstressed access panel is the best, because there are no forces trying to break the seal between the components.

In no case is a bearing bore split even if it is internal to the reducer. Designs with split bearing bores require bolts to hold the bore together. It is common for bearings to fail due the outer face being improperly supported, causing a stress riser at seams in bearing bores.

## AUTOVENT ™ Breather

When a gear reducer is operated intermittently, it warms up while operating and cools down after being shut off. The oil expands when it heats up and compresses the air inside the housing, resulting in a positive pressure that could cause the oil seals to rupture if left unregulated. Conversely, when the oil is cooling, it will reduce in volume, and outside air, and potentially humidity and dirt, will enter the reducer. A small concentration of water in mineral oil will cause foaming, will reduce the lubricating properties of the oil, and will promote a rapid degradation of the lubricant's chemistry. Internal components, such as bearings and gears, may quickly be damaged by a small quantity of these contaminants alone or in combination with caustic or corrosive fluids.

The AUTOVENT™ helps prevent bearing and gear damage by behaving like a check valve to block the entry of foreign material and prevent lubrication contamination from dust particles, moisture and airborne process chemicals. The breather opens at approximately 0.3-0.9 psi during operation and closes tightly as the gearbox cools. This option is perfect for humid conditions and wash-down environments, helping to maintain proper oil cleanliness, while reducing foaming and oxidation.

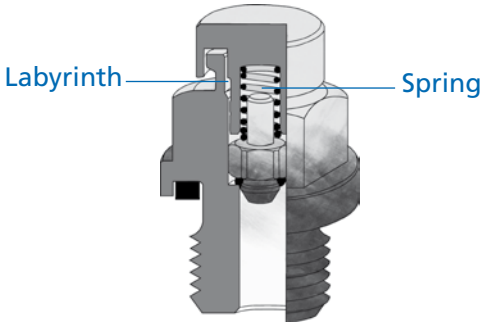


NORD Gear supplies all reducers, except those that are "lubricated for life", with an Autovent™ as a standard feature. In addition, the Autovent™ gives NORD Gear the ability to ship reducers and gear motors with factory-filled lubricant. Since the spring keeps the valve tightly closed regardless of the reducer's orientation, the unit can be inverted during shipment and not develop an oil leak. A metal canopy protects the ball and spring from damage. During operation, oil splash and mist are generated. In contrast to the Autovent™ breather, an open breather can allow these to migrate out, resulting in an undesirable brownish stain around the vent plug.




Send Quote Requests to info@automatedpt.com
Call +1(800)985-6929 To Order or Order Online At Nordgearmotors.com

Send Quote Requests to info@automatedpt.com Call +1(800)985-6929 To Order or Order Online At Nordgearmotors.com



## Quadrilip™ Seals

Quadrilip™ seals are standard for most UNICASE™ gear frame sizes. The smaller gear units do not have dual seals, but the quality of shaft preparation and seal installation is universal.

The Quadrilip™ system is a sign of quality. The seal system consists of two sealing lips, a dust lip, and a grease chamber between the seals. The grease chamber functions as an additional barrier: it helps protect the inner seal lip from damage, and helps prevent external contamination from working its way in. The grease also lubricates the seal lips and keeps them soft and flexible, and prevents them from wearing quickly by reducing friction between the seal lip and shaft surface.

All shaft seal surfaces are either roller burnished or plunge ground, and are an important part of the seal system. With these processes a smooth surface finish of 12-24 pinch rms can be achieved without machine lead that causes the seal surface to act as a pump to force oil out from the reducer or gearmotor.

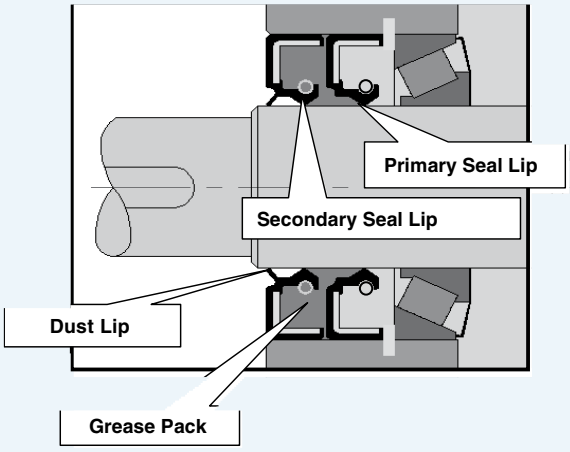


## Modular Design

NORD's modular design philosophy provides you with a competitive edge by allowing you to configure drive systems to exactly fit to your applications. More than 20,000,000 combinations of totally unique gearmotors and speed reducers are possible - assembled in-line or right-angle, mounted by foot or flange, featuring solid or hollow shafts with either metric or inch extensions - to give you complete freedom to specify a drive solution that's perfect for you.

### Benefits

- More output speeds
- More mounting arrangements/Greater flexibility
- Fewer gear stages/Lower costs
- Metric and inch products

NORD engineers stand ready to assist you with your custom applications. Most standard drives can be modified to your purposes, and custom designs can be developed for special applications.

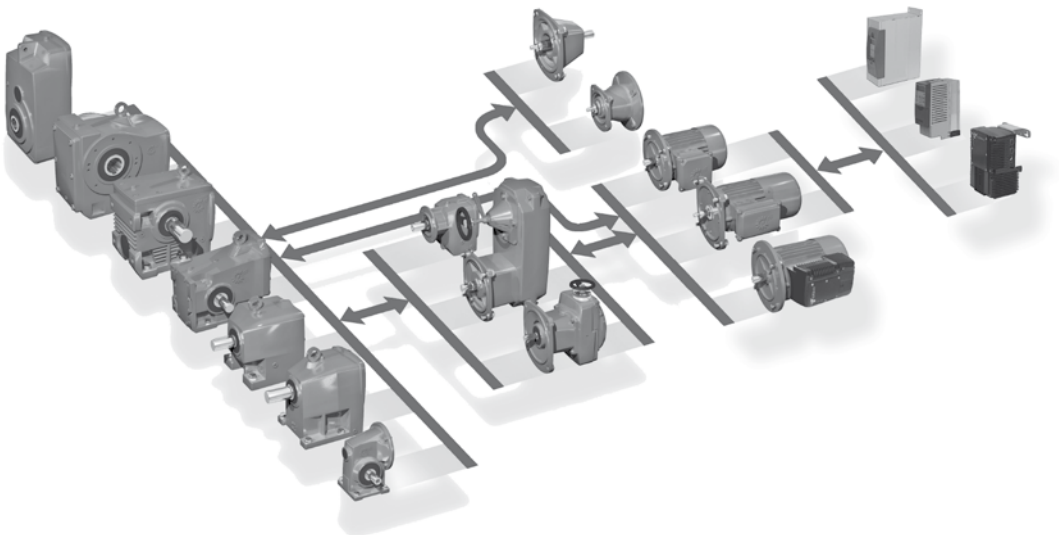




Send Quote Requests to info@automatedpt.com
Call +1(800)985-6929 To Order or Order Online At Nordgearmotors.com

Send Quote Requests to info@automatedpt.com Call +1(800)985-6929 To Order or Order Online At Nordgearmotors.com

# Key Features

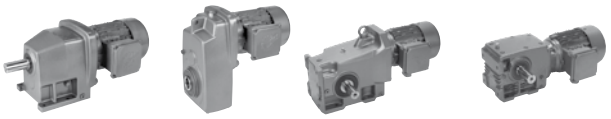

## Gearing

The gears are made from high strength steel forgings. The teeth are case-hardened then precision finished using either grinding or skive-hobbing methods. As a result, high tooth-to-tooth accuracy is ensured which delivers steady output motion. Tooth stresses are controlled to assure very long durability with infinite life of the gear teeth. Gear torque ratings are thus optimized for a high degree of reliability.

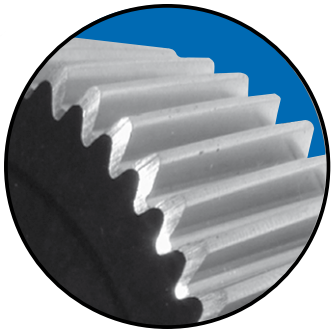

**Gear Quality Level:** AGMA Class 11-13.

**Gear Hardness:** Case hardened to 58-62 Rockwell-C.

**Gear Finish:** All high-speed gears are ground; low-speed gears are skive finished after hardening.

**Edge Deburred Gearing.**

**Designed for infinite life**

## High-Strength Gearcases

Standard housing material is Class 35 Cast Iron. Some units utilize a corrosion resistant aluminum alloy or diecast aluminum alloy housing material.

NORD's robust housings maintain heavy wall sections. Some competitors have reduced material used in their housings for cost savings. Material has been reduced to the point that the walls are too thin and can flex under load. This will misalign the gears and bearings. In addition, bearing outer races need to be supported with a stiff backing to achieve their rating. Thin housings may not properly support the outer bearing races. Housings are internally painted with a primer to seal casting process residue and fill any surface imperfections.

## Lubrication

NORD Gear supplies most all gear units factory-filled with the appropriate oil lubrication type and fill-level per the specified reducer mounting position. The current exceptions include Clincher™ Series parallel-shaft gear units: SK10282, SK10382, SK11282, SK11382, SK12382, and SK9096.1 which are supplied without oil.

It is important that proper oils are used in a gear reducer. By supplying the appropriate lubricant type and amount, NORD Gear eliminates the "guess work" for the consumer.

Properly selected oil will have the required additives to prevent the unwanted formation of foam, oxidation, and rust. As well, the proper extreme pressure additive may be used for hardened alloy steels, or more importantly, not used when it will be a detriment to the bronze gearing in worm reducers. For additional technical information please reference the Lubrication section of this catalog beginning on page 36.

Please see the lubrication table on page 42 for the standard and optional reducer lubrication types, and their service temperature ranges.

## High-Performance Motors & Brakemotors

NORD motors are designed to run cool for longer service life. Low rotor inertia and high starting torque allow peak performance in the most difficult applications for inverter and vector duty per NEMA MG 1-2006 Section 31.4.4.2 voltage spikes. Our motors are internationally accepted, conforming to North American NEMA MG 1 and international IEC electrical specifications. High performance options include brakes, encoders, and forced cooling fans.

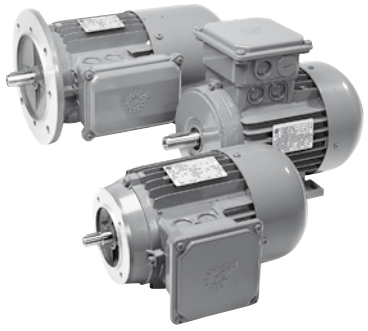




Send Quote Requests to info@automatedpt.com
Call +1(800)985-6929 To Order or Order Online At Nordgearmotors.com

Send Quote Requests to info@automatedpt.com Call +1(800)985-6929 To Order or Order Online At Nordgearmotors.com

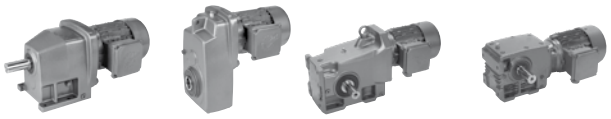

# Key Features

## Compact Coupled (NEMA C-face Input)

NORD Gear supplies reducers with special couplings that eliminate the need for quill-type input with NEMA and IEC frame motors. This allows for superior input shaft alignment and smooth torque transfer, reducing incidents of bearing, shaft, and key failures. Smaller reducers use a proprietary one piece nylon, curved tooth gear coupling with a bronze insert. These materials were selected for their ability to accommodate misalignment, as well as corrosion protection. The bronze insert eliminates steel-to-steel contact allowing ease of motor disassembly even after years of service. Quill-type inputs have steel-to-steel contact between the motor shaft and the quill-input shaft of the reducer. This metal-to-metal contact will undergo fretting corrosion, especially in corrosive or moist environments. Each reducer is shipped from the factory with a sticker on the coupling that shows the proper coupling placement from the motor mounting surface.



## Energy Efficient

Combining the UNICASE™ close dimension control and torsionally stiff, stable housings with high quality gearing results in higher operating efficiencies. Our industry leading 98.5% efficiency per gear stage results in significant power savings over the long haul.

Lowering your operating costs is one of our greatest goals! NORD research and development focuses on energy efficiency, with gearboxes, motors, and frequency inverters designed for lower energy consumption. Our fully diverse line of in-line or right-angle units and motors has been developed to suit your needs.

## Stainless Steel Paint

NORD stainless steel paint is a plural component, aliphatic polyurethane paint with 316 stainless steel flakes with outstanding physical properties and excellent appearance. This paint has excellent adhesion to cast iron, steel, aluminum and most plastics and can be used as a topcoat or as a primer. The NORD stainless steel paint also has outstanding exterior durability and corrosion resistance, and superior chemical resistance when exposed to most industrial solvents, lubricants and cutting oils. The NORD stainless steel paint is excellent for both indoor and outdoor duty and is non-flammable.

It is designed as a USDA incidental contact coating acceptable for use in food, drug and cosmetic industries. Incidental contact means that the paint may not contain antimony: arsenic, cadmium, lead, mercury, selenium or other materials such as carcinogens, mutagens, or teratogens classified as hazardous substances.

**Recapping NORD Stainless Steel Paint Features:**

- Solvent based polyurethane paint for increased durability
- Outstanding exterior durability & corrosion resistance
- Superior chemical resistance when exposed to industrial solvents (laquer thinner, acetone, gasoline, Xylol), lubricants, and cutting oils
- Cured coating develops 2H hardness, yet exhibits excellent high impact resistance
- Heat and humidity resistant (tested for 500 hours at 100% humidity and 100ºF)
- USDA/H1 compliant - incidental contact
- Colors – Stainless steel gray, white, blue, red, black, and orange




Send Quote Requests to info@automatedpt.com
Call +1(800)985-6929 To Order or Order Online At Nordgearmotors.com

Send Quote Requests to info@automatedpt.com
Call +1(800)985-6929 To Order or Order Online At Nordgearmotors.com

# Notes



NORD DRIVESYSTEMS

NOTES


Send Quote Requests to info@automatedpt.com
Call +1(800)985-6929 To Order or Order Online At Nordgearmotors.com

# NORD Contacts

## Contact Information:

- North America
- Global



NORD DRIVESYSTEMS

www.nord.com



# International Contacts - North America

## United States

**NORD Gear Corporation - Midwest Headquarters**
800 Nord Drive, P.O. 367
Waunakee, WI 53597

toll free: 1-888-314-6673
phone: 1-608-849-7300
fax: 1-800-373-6673
eMail: info.us@nord.com

**NORD Gear Corporation - East**
300 E Forsyth Hall Drive
Charlotte, NC 28273

toll free: 1-888-314-6673
phone: 1-608-849-0140
fax: 1-888-259-6673
eMail: info.us@nord.com

**NORD Gear Corporation - West**
1180 Railroad Street
Corona, CA 92882

toll free: 1-888-314-6673
phone: 1-608-849-0190
fax: 1-888-408-6673
eMail: info.us@nord.com

**For Sales office or distributors please contact us or see our website at www.nord.com**

## Canada

**NORD Gear Limited**
41 West Drive
Brampton, Ontario L6T 4A1

toll free: 1-800-668-4378
Phone: 1-905-796-3606
fax: 1-905-796-8130
eMail: info.ca@nord.com

**Engrenages NORD Limitée**
1405 Trans-Canada Hwy.
Suite 245
Dorval, Quebec H9P 2V9

toll free: 1-800-668-4378
phone: 1-514-421-1044
fax: 1-514-421-3973
eMail: info.ca@nord.com

**For Sales office or distributors please contact us or see our website at www.nord.com**

## Mexico

**Mexico NORD Drivesystems SA DE CV**
Mexico Regional Office
Av. Lázaro Cárdenas 1007 Pte.
San Pedro Garza Garcia, N.L.
México, C.P. 66266

phone: +52-81-8220-9165
fax: +52-81-8220-9044
eMail: info.mx@nord.com

**For Sales office or distributors please contact us or see our website at www.nord.com**


Send Quote Requests to info@automatedpt.com
Call +1(800)985-6929 To Order or Order Online At Nordgearmotors.com

Send Quote Requests to info@automatedpt.com Call +1(800)985-6929 To Order or Order Online At Nordgearmotors.com



# International Contacts

### Global
**Getriebebau NORD GmbH & Co. KG,**
Getriebebau-Nord-Str. 1
D-22941 Bargteheide
Phone: +49-4532-401-0 Fax: +49-4532-401-253
Email: info@nord-de.com

### Afghanistan
**Getriebebau NORD GmbH & Co. KG,**
Getriebebau-Nord-Str. 1
D-22941 Bargteheide
Phone: +49-4532-401-0 Fax: +49-4532-401-253
Email: info@af.nord.com

### Algeria
**Tunesia S.I.A. Ben Djemaa & CIE**
220 Avenue des Martyrs
TN - 3000 Sfax
Phone: +216-74-408 446 Fax: +216-74-408 065
Email: bendjemaa@planet.tn

### Algeria
**EURL Agence Maghrebine Des Echanges Commerciaux**
35 Avenue 5 Juillet
Borj El Kiffane
Phone: +213-76-288837 Fax: +213-21-201209
Email: bendjemaa@planet.tn

### Angola
**Power Drives a division of Bearing Man Ltd.**
Bearing Man Park, Droste Cresent
Droste Park Ext. 7, Johannesburg 2001
P.O. Box 33431
Jeppestown 2043, South Africa
Phone: +27-11-620 1500 Fax: +27-11-620 1670
Email: powerdrives@bearingman.co.za

### Argentina
**Chilicote S.A.**
Avda. Julio A. Roca 546
1067 Buenos Aires
Phone: +54-11-4343 8469 Fax: +54-11-4331 4278
Email: chilicote@chilicote.com.ar

### Armenia
**Getriebebau NORD GmbH & Co. KG,**
Getriebebau-Nord-Str. 1
D-22941 Bargteheide
Phone: +49-4532-401-0 Fax: +49-4532-401-253
Email: info@nord-de.com

### Australia
**CMG Pty Ltd.**
19 Corporate Avenue
Rowville, VIC 3178
PO Box 2340, Rowville, VIC 3178 - Australia
Phone: +61-3-9237 4000 Fax: +61-3-9237 4010
Email: mark.alexander@cmggroup.com.au

### Austria
**Getriebebau NORD GmbH**
Deggendorfstraße 8
A-4030 Linz
Phone: +43-732-31 89 20 Fax: +43-732-31 89 20-85
Email: info@nord-at.com

### Bahrain
**Eight Industries**
P.O. Box 32095
Dubai/U.A.E.
Phone: +971-4-3200 770 Fax: +971-4-3200 771
Email: eight@emirates.net.ae

### Bangladesh
**Getriebebau NORD GmbH & Co. KG,**
Getriebebau-Nord-Str. 1
D-22941 Bargteheide
Phone: +49-4532-401-0 Fax: +49-4532-401-253
Email: info@bd.nord.com

### Belarus
**OOO NORD PRIVODY**
P.O. 51
BY-220121 Minsk
Phone: +375-17-205 04 27 Fax: +375-17-205 04 27
Email: info@by.nord.com

### Belgium
**NORD Aandrijvingen België N.V.**
NORD Transmission Belgique S.A.
Boutersemdreef 24
B-2240 Zandhoven
Phone: +32-3-484 59 21 Fax: +32-3-484 59 24
Email: info@nord-be.com

### Bhutan
**Getriebebau NORD GmbH & Co. KG,**
Getriebebau-Nord-Str. 1
D-22941 Bargteheide
Phone: +49-4532-401-0 Fax: +49-4532-401-253
Email: info@bt.nord.com

### Bolivia
**Variadores S.A.**
Carrera 50 (Aut. Sur)
No. 2 Sur 271 - A.A. 053811
Medellin, Columbia
Phone: +57-94-2552200 Fax: +57-94-2557450
Email: variadores@variadores.com.co

### Brazil
**NORD Motoredutores do Brasil Ltda**
Rua Dr. Moacyr Antonio de Morais, 700
Parque Santo Agostinho
Guarulhos – São Paulo
CEP 07140-285
Phone: +55-11-6402 8855 Fax: +55-11-6402 8830
Email: info@nord-br.com


Send Quote Requests to info@automatedpt.com
Call +1(800)985-6929 To Order or Order Online At Nordgearmotors.com

Send Quote Requests to info@automatedpt.com Call +1(800)985-6929 To Order or Order Online At Nordgearmotors.com

# International Contacts

### Bulgaria
**MELSICON Ltd.**
P.Wolov 47-49
BG-1504 SOFIA
Phone: +359-2-9434150 Fax: +359-2-9434160
Email: melsicon@applet-bg.com

### Burundi
**Power Drives a division of Bearing Man Ltd.**
Bearing Man Park, Droste Cresent
Droste Park Ext. 7, Johannesburg 2001
P.O. Box 33431 Jeppestown 2043
South Africa
Phone: +27-11-620 1500 Fax: +27-11-620 1670
Email: daver@bearingman.co.za

### Cameroon
**Getriebebau NORD GmbH & Co. KG,**
Getriebebau-Nord-Str. 1
D-22941 Bargteheide
Phone: +49-4532-401-0 Fax: +49-4532-401-253
Email: export2@nord-de.com

### Canada
**NORD Gear Limited**
41 West Drive
Brampton, Ontario L6T 4A1
Phone: (905) 796-3606 Fax: (905) 796-8130
Email: info.ca@nord.com

### Chile
**TDC Techno Drive Center S.A.**
Los Leones No. 133-2° Piso
Providencia Santiago de Chile
Chile
Phone: +56-2-234 0084 Fax: +56-2-334 9633
Email: tdc@technodrive.cl

### China
**NORD (Beijing)**
Power Transmission Co. Ltd.
No. 5, Tangjiacun,
Guangqudonglu, Chaoyangqu
Beijing 100022
Phone: +86-10-67704305 Fax: +86-10-67704330
Email: info@nord-cn.com

### China
**NORD (Suzhou)**
Power Transmission Co. Ltd.
No.510 Changyang Street
Suzhou Ind. Park
Jiangsu 215021
Phone: +86-512-85180277 Fax: +86-512-85180278
Email: info@nord-cn.com

### Colombia
**Variadores S.A.**
Carrera 50 (Aut. Sur)
No. 2 Sur 271 - A.A. 053811
Medellin
Phone: +57-4-2552200 Fax: +57-4-2557450
Email: variadores@variadores.com.co

### Costa Rica
**Variadores S.A.**
Carrera 50 (Aut. Sur)
No. 2 Sur 271 - A.A. 053811
Medellin, Columbia
Phone: +57-94-2552200 Fax: +57-94-2557450
Email: variadores@variadores.com.co

### Croatia
**NORD-Pogoni d.o.o**
Obrtnicka 9
HR-48260 Krizevci
Phone: +385-48-711 900 Fax: +385-48-270 494
Email: info@nord-hr.com

### Cyprus
**Getriebebau NORD GmbH & Co. KG,**
Getriebebau-Nord-Str. 1
D-22941 Bargteheide
Phone: +49-4532-401-0 Fax: +49-4532-401-253
Email: export2@nord-de.com

### Czech Republic
**NORD-Poháněcí technika, s. r. o.**
Palackého 359
500 03 Hradec Králové
Phone: +420 495 580 310 Fax: +420 495 580 312
Email: HZubr@nord-cz.com

### Dem. Rep. Congo
**Power Drives a division of Bearing Man Ltd.**
Bearing Man Park, Droste Cresent
Droste Park Ext. 7, Johannesburg 2001
P.O. Box 33431 Jeppestown 2043, South Africa
Phone: +27-11-620 1500 Fax: +27-11-620 1670
Email: daver@bearingman.co.za

### Denmark
**NORD-Gear Danmark A/S**
Kliplev Erhvervspark 28 - Kliplev
DK - 6200 Aabenraa
Phone: +45 73 68 78 00 Fax: +45 73 68 78 10
Email: info@nord-dk.com

### Ecuador
**Variadores S.A.**
Carrera 50 (Aut. Sur)
No. 2 Sur 271 - A.A. 053811
Medellin, Columbia
Phone: +57-94-2552200 Fax: +57-94-2557450
Email: variadores@variadores.com.co




Send Quote Requests to info@automatedpt.com
Call +1(800)985-6929 To Order or Order Online At Nordgearmotors.com

Send Quote Requests to info@automatedpt.com Call +1(800)985-6929 To Order or Order Online At Nordgearmotors.com



### Egypt
**IED-International Engineering Development**
4 Abu Gafar El Nahas Street
El Golf, Heliopolis
Cairo
Phone: +20-2-2900475 Fax: +20-2-4185637
Email: ied@thewayout.net

### El Salvador
**Maquinaria E Insumos Industriales, S.A.**
67 Av Sur Edificio #144 Local #3,.
Col Escalon
San Salvador, C.A
Phone: +503-22243059 Fax: +503-22246272
Email: maquinsa@integra.com.sv

### Estonia
**Technobalt Eesti Ltd.**
Läike tee 10
Peetri küla, Rae vald
EE-75301 Harjumaa
Phone: +372-6-684 400 Fax: +372-6-613 165
Email: info@technobalt.ee

### Finland
**NORD Gear Oy**
Aunankorvenkatu 7
FI - 33840 Tampere
Phone: +358-3-254 1800 Fax: +358-3-254 1820
Email: info@nord-fi.com

### France
**NORD Réducteurs**
Bureaux commerciaux
17, Av. Georges Clémenceau
FR-93421 Villepinte Cedex
Phone: +33-1-4963 0189 Fax: +33-1-4963 0811
Email: info@nord-fr.com

### Germany
**Getriebebau NORD GmbH & Co. KG,**
Getriebebau-Nord-Str. 1
D-22941 Bargteheide
Phone: +49-4532-401-0 Fax: +49-4532-401-253
Email: info@nord-de.com

### Ghana
**Getriebebau NORD GmbH & Co. KG**
Getriebebau-Nord-Str. 1
22941 Bargteheide / Hamburg Germany
Phone: +49-4532-4010 Fax: +49-4532-401254
Email: export2@nord-de.com

### Greece
**Mangrinox S.A.**
14 Grevenon Str.
Votanikos
GR-11855 Athens
Phone: +30-210-3423201-3 Fax: +30-210-3459767, 3459928
Email: magrinox@mail.otenet.gr

### Guatemala
**Maquinaria E Insumos Industriales, S.A.**
19 Avenida 16-56 Zona 10
Empresarial Santa Fe Bodega 4
Guatemala 01010
Phone: +502-23674490 Fax: +502-23674493
Email: maquinsa@inteinet.net.gt

### Guinea
**Getriebebau NORD GmbH & Co. KG**
Getriebebau-Nord-Str. 1
22941 Bargteheide / Hamburg Germany
Phone: +49-4532-4010 Fax: +49-4532-401254
Email: export2@nord-de.com

### Hungary
**NORD Hajtastechnika Kft.**
Törökkö u. 5-7
HU-1037 Budapest
Phone: +36 1 437 0127 Fax: +36 1 250 5549
Email: info@nord-hu.com

### Iceland
**Varmaverk Ltd.**
Dalshrauni 5
IS-220 Hafnarfiroei
Phone: +354-5651750 Fax: +354-5651951
Email: pall@varmaverk.is

### India
**NORD Drivesystems Pvt. Ltd.**
282/ 2, 283/2, Plot No. 15
Mauje, Village Mann
Tal Mulshi, Adj. Hinjewadi Phase- II
Pune Maharashtra 411 057
Phone: +91-20-39801200 Fax: +91-20-39801216
Email: info@nord-in.com

### Indonesia
**PT. NORD Indonesia**
Jln. Raya Serpong KM7,
Kompleks Rumah Multi Guna Blok D-No. 1
Pakulonan, Serpong 15310 - Tangerang
West Java
Phone: +62-21-5312 2222 Fax: +62-21-5312 2288
Email: info@nord-id.com


Send Quote Requests to info@automatedpt.com
Call +1(800)985-6929 To Order or Order Online At Nordgearmotors.com

Send Quote Requests to info@automatedpt.com Call +1(800)985-6929 To Order or Order Online At Nordgearmotors.com

# International Contacts

### Iran
**Paralog Engineering Co. Ltd.**
P.O.Box 19395-7366
No. 6, Shangarf Street
Mirdamad Blvd.
Tehran 15489
Phone: +98-21-22905551 / -2 Fax: +98-21-22905550
Email: nord@Paralog.ir

### Ireland
**NORD Gear Limited (UK)**
11 Barton Lane, Abingdon Science Park,
Abingdon,
Oxfordshire OX14 3NB
Phone: +353(0) 87 69 -48 7 11 Fax: +353 (0) 49 85 - 43 7 34
Email: pfinnegan@nord-ie.com

### Israel
**Ringel Bros. Ltd**
Hertzel St. 134
5148 Tel-Aviv
Phone: +972-3-6824027 Fax: +972-3-6822041
Email: mringel@netvision.net.il

### Italy
**NORD-Motoriduttori s.r.l.**
Via Newton 22
IT-40017 San Giovanni in Persiceto (BO)
Phone: +39-051-6870 711 Fax: +39-051-6870 793
Email: info@nord-it.com

### Ivory Coast
**Getriebebau NORD GmbH & Co. KG,**
Getriebebau-Nord-Str. 1
D-22941 Bargteheide
Phone: +49-4532-401-0 Fax: +49-4532-401-253
Email: export2@nord-de.com

### Jordan
**Arab Co. For Power Transmissions Technology**
"GearTech Co"
P.O Box 830641
Amman 11183
Phone: +962-6-5692283 Fax: +962-6-5656750
Email: indgroup@wanadoo.jo

### Kazakhstan
**NORD Privody KZ**
Chaykovski str.,
h.131, of.12. KZ - Almaty, 050 000
Phone: +7-3272-61 02 99 Fax: +7-3272-61 02 99
Email: info@kz.nord.com

### Kenya
**Jos. Hansen & Soehne (East Africa) Ltd.**
Baba Dogo Road, Ruaraka
P.O.Box 30196
Nairobi
Phone: +254-2-861 637 Fax: +254-2-861 640
Email: hansenkenya@swiftkenya.com

### Kongo
**Power Drives a division of Bearing Man Ltd.**
Bearing Man Park, Droste Cresent
Droste Park Ext. 7, Johannesburg 2001
P.O. Box 33431 Jeppestown 2043
South Africa
Phone: +27-11-620 1500 Fax: +27-11-620 1670
Email: powerdrives@bearingman.co.za

### Korea
**POWERKING GEAR Co.**
216-8, No-onsa,
Gwangmyung, Gyunggi, 423-080
Phone: +82-2-2615-6044 Fax: +82-2-2060-7044
Email: sales@pkgear.com

### Kuwait
**Eight Industries**
P.O. Box 32095
Dubai/U.A.E.
Phone: +971-4-3200 770 Fax: +971-4-3200 771
Email: eight@emirates.net.ae

### Kyrgyzstan
**Getriebebau NORD GmbH & Co. KG,**
Getriebebau-Nord-Str. 1
D-22941 Bargteheide
Phone: +49-4532-401-0 Fax: +49-4532-401-253
Email: info@nord-de.com

### Latvia
**SIA Technobalt**
Skaistkalnes 1
Riga LV - 1004
Phone: +371-7605 046 Fax: +371-7605 062
Email: technobalt@technobalt.lv

### Lebanon
**Hosny Homany**
P.O. Box 102
Ghobery, Beirut
Phone: +961 5 480661/2 Fax: +961 5 480660
Email: hhomany@cyberia.net.lb

### Liberia
**Getriebebau NORD GmbH & Co. KG,**
Getriebebau-Nord-Str. 1
D-22941 Bargteheide
Phone: +49-4532-401-0 Fax: +49-4532-401-253
Email: export2@nord-de.com




Send Quote Requests to info@automatedpt.com
Call +1(800)985-6929 To Order or Order Online At Nordgearmotors.com

Send Quote Requests to info@automatedpt.com Call +1(800)985-6929 To Order or Order Online At Nordgearmotors.com



### Lithuania
**Technobalt Group**
UAB Technobalta
Titnago g.10
LT-02300 Vilnius
Phone: +370-5-260 2503 Fax: +370-5-2653288
Email: lietuva@technobalt.com

### Malaysia
**GTM Sdn Bhd**
No. 19, Jalan Tambur 33/19,
Shah Alam Technology Park, Section 33,
40400, Shah Alam,
Selangor Darul Ehsan
Phone: +60-3-51 24 67 73 Fax: +60-3-51 24 68 10
Email: jenny.multidrive@gmail.com

### Marocco
**Societe Marocaine des Etablissements Moulin**
14 Rue Allal Ben Ahmed AMKIK et 7,
Rue Saint Saens
Belvédère - Casablanca
Phone: +212-22-406777 Fax: +212-22-406782
Email: etsmoulin@wanadoo.net.ma

### Mauritius
**Power Drives a division of Bearing Man Ltd.**
Bearing Man Park, Droste Cresent
Droste Park Ext. 7, Johannesburg 2001
P.O. Box 33431
Jeppestown 2043
South Africa
Phone: +27-11-620 1500 Fax: +27-11-620 1670
Email: powerdrives@bearingman.co.za

### Mexico
**NORD DRIVE SYSTEMS SA DE CV**
Av. Lázaro Cárdenas 1007 Pte.
San Pedro Garza Garcia, N.L.
México, C.P. 66266
Phone: +52-81-8220-9165 Fax: +52-81-8220-9044
Email: info.mx@nord.com

### Namibia
**Power Drives a division of Bearing Man Ltd.**
Bearing Man Park, Droste Cresent
Droste Park Ext. 7, Johannesburg 2001
P.O. Box 33431
Jeppestown 2043
South Africa
Phone: +27-11-620 1500 Fax: +27-11-620 1670
Email: powerdrives@bearingman.co.za

### Nepal
**Getriebebau NORD GmbH & Co. KG,**
Getriebebau-Nord-Str. 1
D-22941 Bargteheide
Phone: +49-4532-401-0 Fax: +49-4532-401-253
Email: info@np.nord.com

### Netherlands
**NORD Aandrijvingen Nederland B.V.**
Voltstraat 12
NL-2181 HA Hillegom
P.O.Box 136
NL-2180 AC Hillegom
Phone: +31-252 529544 Fax: +31-252 522222
Email: info@nord-nl.com

### New Zealand
**CMG Electric Motors (NZ) Limited**
2 Ross Reid Avenue
East Tamaki, Auckland
Phone: +64-9-273 9162 Fax: +64-9-273 9062
Email: Mark.Alexander@cmggroup.com.au

### Nigeria
**Jos. Hansen & Soehne (Nigeria) Ltd.**
km 16, Ikorodu Road (near Bata)
Ojota
Lagos
Phone: +234-1-4974 304 Fax: +234-1-4976 936
Email: joshansen@linkserve.com

### Norway
**NORD GEAR NORGE A/S**
Solgaard Skog 7,
PB85
N-1501 Moss
Phone: +47-69 20 69 90 Fax: +47-69 20 69 93
Email: MHansen@nord-no.com

### Oman
**Eight Industries**
P.O. Box 32095
Dubai/U.A.E.
Phone: +971-4-3200 770 Fax: +971-4-3200 771
Email: eight@emirates.net.ae

### Pakistan
**OTC**
Flat # 3, 89B/C-II,
Gulberg-III
Lahore 54660
Phone: +92-42-587 2667-9 Fax: +92-42-587 2670
Email: sajjad@otc.com.pk

### Panama
**Variadores S.A.**
Carrera 50 (Aut. Sur)
No. 2 Sur 271 - A.A. 053811
Medellin, Columbia
Phone: +57-94-2552200 Fax: +57-94-2557450
Email: variadores@variadores.com.co


Send Quote Requests to info@automatedpt.com
Call +1(800)985-6929 To Order or Order Online At Nordgearmotors.com

Send Quote Requests to info@automatedpt.com Call +1(800)985-6929 To Order or Order Online At Nordgearmotors.com

# International Contacts

### Peru
**Delcrosa S.A.**
Av. Argentina 1515
Lima
Phone: +51-1-336 6614 Fax: +51-1-336 8189
Email: viviana@delcrosa.com.pe

### Philippines
**Mheco Mechanical Handling Equipment Company Inc**
Suite 812 Herrera Tower,
Herrera cor. Valero Sts.
Salcedo Village, Makati City
P.O.Box 1004
Makati 1250
Phone: +63-2-844 8901-05 Fax: +63-2-845 1535
Email: mheco@skyinet.net

### Poland
**NORD Napedy sp. z o.o.**
Ul. Grottgera 30
PL-32-020 Wieliczka
S d Rejonowy dla Krakowa Zródmiescia
NIP: 683-17-20-355
Kapital ZakBadowy 770 000, 00 PLN
Phone: +48-0122889900 Fax: +48-0122889911
Email: biuro@nord-pl.com

### Portugal
**NORD Motorreductores**
Apdo de Correos 166,
ES-08200 Sabadell - Spain
Phone: +34-93-723 5322 Fax: +34-93-723 3147
Email: info@nord-es.com

### Qatar
**Eight Industries**
P.O. Box 32095
Dubai/U.A.E.
Phone: +971-4-3200 770 Fax: +971-4-3200 771
Email: eight@emirates.net.ae

### Romania
**S.C.NORD Drivesystems S.R.L.**
Str.Nicolae Iorga,Nr.55/3
RO-550387 SIBIU
Phone: +40/269/232880 Fax: +40/269/232880
Email: UPiringer@ro.nord.com

### Russian Federation
**OOO NORD PRIVODY**
Ul. A. Nevsky 9
RU-191167 St.Petersburg
Phone: +7-812-327 0192 Fax: +7-812-327 0192
Email: info@nord-ru.com

### Rwanda
**Power Drives a division of Bearing Man Ltd.**
Bearing Man Park, Droste Cresent
Droste Park Ext. 7, Johannesburg 2001
P.O. Box 33431 Jeppestown 2043
South Africa
Phone: +27-11-620 1500 Fax: +27-11-620 1670
Email: powerdrives@bearingman.co.za

### Saudi Arabia
**Al-Musairiey Industrial Equipment. Co.**
P.O. Box 40966
Riyadh - 11511
Phone: +966-1-448 3808 Fax: +966-1-446 9244
Email: info@almusairiey.com

### Senegal
**Getriebebau NORD GmbH & Co. KG**
Getriebebau-Nord-Str. 1
D-22941 Bargteheide
Phone: +49-4532-401-0 Fax: +49-4532-401-253
Email: export2@nord-de.com

### Singapore
**NORD GEAR Pte Ltd**
33 Kian Teck Drive
Jurong, Singapore 628850
Phone: +65-6265-9118 Fax: +65-6265-6841
Email: info@nord-sg.com

### Slovakia
**NORD Pohony, s.r.o.**
Juzná Trieda 74
SK - 04001 Kosice
Phone: +421-55-729 9600 Fax: +421-55-729 9599
Email: Info@nord-sk.com

### Slovenia
**Getriebebau NORD GmbH**
Deggendorfstraße 8
A-4030 Linz
Phone: +43-732-31 89 20 Fax: +43-732-31 89 20-85
Email: info@nord-at.com

### South Africa
**Power Drives a division of Bearing Man Ltd.**
6 Tetford Circle,
Millennium Bridge Business Park,
La Lucia Ridge 4320 (Durban)
P.O. Box 25191, Gateway 4321 (Durban)
Phone: +27-11-62 01 61 3 Fax: +27-11-62 01 67 0
Email: powerdrives@bearingman.co.za




Send Quote Requests to info@automatedpt.com
Call +1(800)985-6929 To Order or Order Online At Nordgearmotors.com

Send Quote Requests to info@automatedpt.com Call +1(800)985-6929 To Order or Order Online At Nordgearmotors.com



### Spain
**NORD Motorreductores S.A.**
Aptdo de Correos 166
ES - 08200 Sabadell
Phone: +34-93-723 5322 Fax: +34-93-723 3147
Email: info@nord-es.com

### Sri Lanka
**Getriebebau NORD GmbH & Co. KG,**
Getriebebau-Nord-Str. 1
D-22941 Bargteheide
Phone: +49-4532-401-0 Fax: +49-4532-401-253
Email: info@lk.nord.com

### Sweden
**NORD Drivsystem AB**
Box 2097
Ryttargatan 277
SE-194 02 Upplands Väsby
Phone: +46-8-594 114 00 Fax: +46-8-594 114 14
Email: info@nord-se.com

### Switzerland
**Getriebebau NORD AG**
Bächigenstr.18
CH-9212 Arnegg
Phone: +41-71-38899 11 Fax: +41-71-38899 15
Email: info@nord-ch.com

### Syria
**Elias Brothers Co.**
Al' Kowatly St. 2
P.O. Box 4282
Homs
Phone: +963-31-2771 004 Fax: +963-31-2771 003
Email: eliasbrothersco@mail.sy

### Taiwan
**TACT Trans-Asia Consulting & Trade Co., Ltd.**
1F, No. 157-1, Sec. 1, Beisin Road.,
Sindian City,
Taipei County 231, Taiwan R.O.C.
Phone: + 886-2-29188768 Fax: + 886-2-29185985
Email: TACT@trans-asia.com.tw

### Tanzania
**Jos. Hansen & Soehne (Tanzania) Ltd.**
Holland House, Ohio Street
P.O.Box 9521
Dar es Salaam
Phone: +255-22-211 5746 Fax: +255-22-211 2948
Email: jhs-t@africaonline.co.tz

### Thailand
**Charoen Muang Machinery Co. Ltd.**
164/1 Wisutkasat Rd.
Banpanthom, Pranakorn
Bangkok 10200
Phone: +66-2-281 5331 Fax: +66-2-280 8033-4
Email: info@nord-sg.com

### Tunisia
**Tunesia S.I.A. Ben Djemaa & CIE**
220 Avenue des Martyrs
TN - 3000 Sfax
Phone: +216-74-408 446 Fax: +216-74-408 065
Email: bendjemaa@planet.tn

### Turkey
**NORD-REMAS**
Redüktör Sanayi ve
Ticaret Ltd. Sti.
Tepeören Köyü
34959 - Tuzla - Istanbul
Phone: +90-216-304 13 60 Fax: +90-216-304 13 69
Email: info@nord-tr.com

### Uganda
**Jos. Hansen & Soehne (Uganda) Ltd.**
Workers House Plot 1
Pilkington Road
P.O.Box 2333
Kampala
Phone: +256-41-251 324 Fax: +256-41-251 325
Email: hansenuganda@africaonline.co.ug

### Ukraine
**GETRIEBEBAU NORD GmbH**
Vasilkovskaja, 1
office 306
03040 KIEW
Phone: + 380-44-537 0615 Fax: + 380-44-537 0615
Email: vtsoka@nord-ukr.com

### United Arab Emirates
**Eight Industries**
P.O. Box 32095
Dubai/U.A.E.
Phone: +971-4-3200 770 Fax: +971-4-3200 771
Email: eight@emirates.net.ae

### United Kingdom
**NORD Gear Limited (UK)**
11 Barton Lane, Abingdon Science Park,
Abingdon,
Oxfordshire OX14 3NB
Phone: +44-1235-534404 Fax: +44-1235-534414
Email: info@nord-uk.com


Send Quote Requests to info@automatedpt.com
Call +1(800)985-6929 To Order or Order Online At Nordgearmotors.com

# International Contacts

DRIVESYSTEMS

### United States - Midwest
**NORD Gear Corporation**
800 Nord Drive, P.O. 367
Waunakee, WI 53597
Phone: 1-888-314-6673 Fax: 1-800-373-6673
Phone: 1-608-849-7300
Email: info.us@nord.com

### United States - West
**NORD Gear Corporation**
1137 W. Bradford Circle
Corona, CA 92882
Toll free: 1-888-314-6673 Fax: 1-888-408-6673
Phone: 1-608-849-0190
Email: info.us@nord.com

### United States - East
**NORD Gear Corporation**
100 Forsyth Hall Drive
Building 100B
Charlotte, NC 28273
Toll free: 1-888-314-6673 Fax: 1-888-259-6673
Phone: 1-608-849-0140
Email: info.us@nord.com

### Uzbekistan
**Getriebebau NORD GmbH & Co. KG,**
Getriebebau-Nord-Str. 1
D-22941 Bargteheide
Phone: +49-4532-401-0 Fax: +49-4532-401-253
Email: info@nord-de.com

### Venezuela
**Getriebebau NORD GmbH & Co. KG,**
Getriebebau-Nord-Str. 1
D-22941 Bargteheide
Phone: +49-4532-401-0 Fax: +49-4532-401-253
Email: info@nord-de.com

### Vietnam
**NORD Gear Pte. Ltd**
Representative office
Unit 401, 4F, An Dinh Building,
18 Nam Quoc Cang Street
Pham Ngu Lao Ward
District 1, Ho Chi Minh City, Vietnam
Phone: +84 8 925 7270 Fax: +84 8 925 7271
Email: info@vn.nord.com

### Zambia
**PROVIDENT INVESTMENT Ltd**
Mr.Y.M.Mulambya
1st. Floor - Angoni House
Obote Avenenue
Kitwe
Phone: +260-2-22 60 84 Fax: +260-2-22 67 10
Email: provident@zamtel.zm

### Zimbabwe
**Power Drives a division of Bearing Man Ltd.**
Bearing Man Park, Droste Cresent
P.O. Box 33431 Jeppestown 2043
South Africa
Phone: +27-11-620 1500 Fax: +27-11-620 1670
Email: powerdrives@bearingman.co.za


Send Quote Requests to info@automatedpt.com
Call +1(800)985-6929 To Order or Order Online At Nordgearmotors.com

Send Quote Requests to info@automatedpt.com
Call +1(800)985-6929 To Order or Order Online At Nordgearmotors.com




Send Quote Requests to info@automatedpt.com
Call +1(800)985-6929 To Order or Order Online At Nordgearmotors.com

Send Quote Requests to info@automatedpt.com Call +1(800)985-6929 To Order or Order Online At Nordgearmotors.com

# NORD GEAR CORPORATION

DRIVESYSTEMS — CONDITIONS OF SALE — WWW.NORD.COM

1. CONTRACT

Any contract between Nord Gear Corporation, hereinafter designated as Seller, and the Buyer is subject to the terms and conditions of sale hereinafter set forth. Any deviation from such terms and conditions must be specifically set forth in writing and consented to by Seller. Accordingly, the Buyer and Seller acknowledge and agree that the terms and conditions set forth below and on the face hereof shall govern Buyer's purchase of the goods described on the face hereof and shall take precedence over and represents the final agreement between Buyer and Seller, notwithstanding any inconsistent, contradictory or other prior or further conditions contained in any oral or written request or purchase order issued by Buyer or any other document furnished by Buyer in connection with its purchase of the Goods, regardless of whether such document or documents are exchanged simultaneously with this Invoice or prior or subsequent thereto. Any additional or different terms or conditions which may appear in any communicaiton, oral or written, from Seller, its officers, employees, agents or representatives, are hereby expressly rejected and shall not be effective or binding upon the Seller, unless specifically hereafter agreed to in writing by Seller and no such additional or different terms or conditions in any document submitted to Seller by Buyer shall become part of the contract between Buyer and Seller, unless such written acceptance by Seller specifically recognizes and assents to their inclusion. Any objection by Buyer to the terms and conditions hereof shall be ineffective unless Seller is advised in writing thereof within two (2) days of the date of this Invoice.

2. CONFIRMATION

An order shall be deemed accepted only when duly confirmed by Seller, at Nord Gear Corporation's home office in Waunakee, Wisconsin, and upon such confirmation the order shall become a contract binding upon the parties hereto, their successors and assigns.

3. PRICES

Prices shown are list prices and may be subject to applicable discounts. Unless otherwise agreed upon in writing, prices are FOB factory Waunakee, Wisconsin. Prices and discounts are subject to change without notice until order is accepted. Seller's prices do not include cost of any inspection permits required.

4. LIMITED WARRANTY

Seller hereby warrants that the goods sold hereunder shall be free from material defects in material and workmanship, if properly installed and used under normal operating conditions, for a period of twelve (12) months from the date of installation or eighteen (18) months from date of shipment, whichever comes first (the "Warranty Period"). With respect to gears and housings only, the Warranty Period is extended to thirty-six (36) months from the date of invoice or twenty-four (24) months from the date of installation, whichever comes first. The limited warranty shall not apply to any components or parts which are subject to normal operational wear and tear, including, but not limited to, belts and traction discs. Should any goods fail to comply with the foregoing limited warranty, Buyer shall provide written notice to Seller of the claimed defect and all relevant details within thirty (30) days of Buyer's discovery of the claimed defect. Buyer shall return the allegedly defective goods to Seller at its facilities in Waunakee, Wisconsin or to such other location within the USA as may be designated by Seller in its sole discretion, with all shipping and transportation charges prepaid by Buyer. Seller shall then examine the returned goods to determine if the claimed defect is covered by the limited warranty. If the claimed defect is covered by the limited warranty, Buyer's sole and exclusive remedy shall be to have Seller repair or replace, at Seller's option, the defective goods or components in accordance with the terms of this limited warranty. Seller shall have a commercially reasonable time to make such repairs or replacements and may use new or reconditioned components. Any repair or replacement shall not extend the Warranty Period unless otherwise agreed by Seller. Buyer shall pay all shipping costs and any costs of removal and re-installation of goods or components.

The foregoing limited warranty shall not apply with respect to any goods or components (i) which are not installed, used, operated, serviced or maintained in accordance with manufacturer's instructions or which are otherwise not properly installed, used, operated, serviced or maintained, or (ii) which are misused, neglected, damaged, altered, repaired, reconfigured or incorrectly wired. Seller makes no representations as to the specifications, capacity or performance of the goods sold hereunder, except as may be specifically set forth in the invoice's written specifications, and any such representations are expressly conditioned upon the accuracy and completeness of the data and information furnished by the buyer and upon the goods being properly installed, used, serviced and maintained by Buyer. Any description or model of the goods is for identification or illustrative purposes only and shall not be deemed to create any warranty, express or implied.

THE FOREGOING LIMITED WARRANTY SHALL EXTEND SOLELY TO BUYER AND NOT TO ANY OTHER PARTY. THE FOREGOING LIMITED WARRANTY IS IN LIEU OF ANY AND ALL OTHER WARRANTIES, WHETHER EXPRESS OR IMPLIED. SELLER HEREBY EXCLUDES AND DISCLAIMS ANY AND ALL OTHER WARRANTIES, WHETHER EXPRESS OR IMPLIED, INCLUDING, WITHOUT LIMITATION, ANY IMPLIED WARRANTIES OF MERCHANTABILITY OR FITNESS FOR A PARTICULAR PURPOSE. IF BUYER SHALL FAIL TO PAY WHEN DUE ANY PORTION OF THE PURCHASE PRICE OR ANY OTHER PAYMENT REQUIRED FROM BUYER TO SELLER UNDER THIS CONTRACT, ALL WARRANTIES AND REMEDIES SET FORTH HEREIN SHALL BE DEEMED NULL AND VOID, AB INITIO. THE PARTIES ACKNOWLEDGE AND AGREE THAT THE EXCLUSIVE REMEDY UNDER THE FOREGOING LIMITED WARRANTY SHALL NOT HAVE FAILED OF ITS ESSENTIAL PURPOSE (AS THAT TERM IS USED IN THE UNIFORM COMMERCIAL CODE) PROVIDED THAT SELLER REMAINS WILLING TO REPAIR OR REPLACE DEFECTIVE GOODS WITHIN A COMMERCIALLY REASONABLE TIME. BUYER SPECIFICALLY ACKNOWLEDGES AND AGREES THAT THE PRICE CHARGED BY SELLER FOR THE GOODS IS BASED UPON THE LIMITATIONS OF SELLER'S WARRANTY OBLIGATIONS AND OTHER LIABILITIES AS SET FORTH HEREIN.

LIMITATION OF LIABILITY. NOTWITHSTANDING ANY OTHER PROVISION HEREOF, IN NO EVENT SHALL SELLER BE LIABLE TO BUYER OR TO ANY OTHER PARTY FOR ANY INCIDENTAL, SPECIAL, INDIRECT OR CONSEQUENTIAL DAMAGES, LOST PROFITS, OR FOR ANY LOSSES, CLAIMS OR DAMAGES RELATING TO OR ARISING FROM THE USE OR OPERATION OF THE GOODS, AND IN NO EVENT SHALL ANY CLAIM OR RECOVERY OF ANY KIND EXCEED THE PURCHASE PRICE OF THE GOODS IDENTIFIED IN THE RELATED INVOICE.

5. SHORTAGE AND NONCONFORMITY

Any claim of shortage or that the goods do not conform with the specifications of the order or model must be made in writing within ten (10) days after delivery of the goods (as to which such claim is made) to Buyer or its nominees, but in no event shall the claim be later than within the time limit provided by the carrier or insurance company, otherwise such claim shall be deemed waived. Buyer may not return any goods claimed to be in non-conformity without Seller's prior written authorization. Goods returned without permission will not be accepted, including for credit, and will be returned to Buyer, F.O.B. Sellter's plant. Any claim based on the receipt of damaged Goods must be filed with the carrier which delivered the goods. The samples, measurements, dimensions and weights contained in the Seller's catalogs, sales manuals, photographs and drawings constitute only an approximate guide. The Seller reserves the right to make any change which the Seller, in its absolute discretion, considers necessary. While the goods will be delivered principally according to specifications or standards or quantities agreed upon, insignificant deviations or insignificant changes in construction are permissible. The same applies to partial deliveries, In the event that Buyer has a verified claim of shortage or nonconformity of the goods to the specifications of the order or the model, and if such claim has been submitted within the required time limit as set forth above, the Seller shall, at its own expense, make up for the shortage of the goods, or replace or repair the goods, as the case may be, but in no event shall Seller be or become liable to Buyer or to any other person or persons for any loss in damage, direct or indirect, arising out of or caused by such incidents or for the loss of profits, business or good will. The liability of the Seller to Buyer, if any hereunder, for breach of warranty, contract, negligence or otherwise, shall in no event exceed the amount of the purchase price of the goods sold with respect to which any damages are claimed. Shipping dates are estimates unless parties expressly agree on time of the essence.

6. FORCE MAJEURE

The obligation of the Seller shall be modified or excused, as the case may be, for reasons of Acts of God, war, governmental law regulations, strikes or lock-outs, fire, breakdown of machinery, whether in its own business enterprise, or if for any other cause beyond Seller's control, the goods cannot be delivered or their delivery becomes delayed in whole or in part. In the above instances time for delivery shall be extended for the period of the delay caused, with the proviso, however, that either party may cancel in writing the undelivered portion of the order or contract if the delay exceeds six (6) months from the delivery date originally confirmed by Seller. In no event shall Seller become liable in the aforesaid instances to Buyer or any third party for consequential damages or business loss.

7. SHIPMENT AS UNIT

Each shipment by Seller shall be treated as a separate and distinct unit with respect, but only with respect to forwarding, terms of payment, and the making of claims by the Buyer: provided, however, that if the Buyer defaults in the payment of any obligation to Seller or any installments thereof, under any agreement between Buyer and Seller, or if Buyer refuses to accept any goods when tendered for delivery, the Seller may, on fifteen (15) days written notice to the Buyer, without prejudice to Seller's other lawful remedies, either defer further performance until the defaulted payments are made in full, or make future deliveries for cash in advance only, or treat the entire contract or contracts with Buyer as breached by the Buyer and pursue its remedies for breach.

8. BUYER'S REFUSAL OF DELIVERY

If Buyer refuses to accept delivery of any goods tendered for delivery, then Seller, without prejudice to Seller's other lawful remedies, may either store or cause such goods to be stored in a warehouse, for buyer's account and at Buyer's cost, risk and expense, or sell such goods (without notice) to any purchases at public or private sale, and hold the Buyer liable for any difference between (a) the contract price of the goods, and (b) the price at which goods are resold less the costs and expense of such resale including brokerage commissions, or restocking charges.

9. GOODS IN TRANSIT

If prior to delivery or while the goods are in transit, Buyer or Seller becomes bankrupt or insolvent, or any petition in bankruptcy or for the reorganization or for a state court receivership is filed against Buyer or Seller, as the case may be, then the other party hereto may forthwith terminate this contract by giving written notice of such termination. Such termination shall not affect any claim for damages available to the Buyer, provided that if Buyer is then indebted to Seller, the amount of any such damage claim shall be abated to the extent that the indebtedness of Buyer to Seller, as actually paid in money, is abated by any order of judgement entered or any plan adopted in any bankruptcy, reorganization, receivership, or similar proceeding. Such termination shall not prejudice the Seller's rights to any amounts then due under the contract. If Buyer becomes bankrupt or insolvent or any petition in bankruptcy or for reorganizing or if a state court receivership is filed against Buyer, then, at its option Seller may take possession of any goods theretofore sold to Buyer, in connection with which the full purchase price has not been paid, analogous to the terns and provisions set forth in Paragraphs 11 and 12 hereinafter.

10. DELIVERY

(a) Any indicated dates of delivery are approximate only, but NORD Gear will attempt to meet them whenever possible. (b) NORD Gear will not be liable for any penalty clausess contained in any specifications or order submitted unless agreed to in writing by an authorized officer of NORD Gear Corporation. (c) Unless otherwise agreed, delivery of the goods to any carrier shall constitute delivery to the Buyer, and thereafter the risk of loss or damage to the goods shall be upon the Buyer. (d) If the Buyer does not give delivery instructions to the Seller at least (10) days prior to the delivery date ex factory confirmed by the Seller, the Seller may deliver the goods to a carrier of its own choosing, at Buyer's cost and risk, or, at Seller's option, may store the goods on the pier or any warehouse, at Buyer's cost and risk. Any purchase price in such event becomes due and payable within ten (10) days of such storage.

11. PAYMENT OF PURCHASE PRICE

Time of payment is of the essence under the contract. Unless otherwise provided, terms of payment are 30 days net from the date of invoice with a 1% discount if paid within 10 days of date of invoice. Upon default in any of the terms of the contract, or failure to comply with any of the conditions thereof, or upon seizure of the property under execution or other legal process, or if the Buyer becomes bankrupt or insolvent, or any petition for reorganization or for a state court receivership is filed against Buyer, or if the Buyer makes any assignment for the benefit of it's creditors or otherwise sells, encumbers or disposes of the goods, or if for any other reason the Seller should deem itself insecure, the full amount of the purchase price then remaining unpaid shall at once become due and payable at the option of the Seller.

12. BUYER'S DEFAULT

Upon the Buyer's default, the Seller may dispose of the merchandise in any manner that it deems fit and, if it desires to resell same, may do so at private or public sale, with or without notice, and with or without the property being at the place of sale, subject, however, to applicable laws. The Seller or its assigns shall have the right to bid at such sale and may become the purchaser of the property. The proceeds of the sale shall first be applied to the expenses incurred in retaking, repairing, storing and selling the goods, reasonable attorney's fees included, and then shall be applied to the payment of the balance due under the contract. Any surplus amount shall be paid to the Buyer. If a deficiency results after the resale, the Buyer agrees to pay such forthwith, together with reasonable attorney's fees, for the recovery of the goods incurred by the Seller. If upon the Buyer's default, the Seller elects not to resell any goods which it may repossess, then the cost of repossession, including reasonable attorney's fees, shall forthwith be due and payable from Buyer to Seller. Buyer agrees to pay all reasonable costs and reasonable attorneys' fees incurred by Seller in enforcing Seller's rights against Buyer, including Seller's right to payment of the purchase price of the goods and Buyer's payment of all other amounts owing to Seller required under this Invoice and Conditions of Sale.

13. SECURITY INTEREST AND TITLE

In states and localities which are governed by the Uniform Commercial Code, this contract shall serve as security agreement, reserving in Seller a security interest until full payment of purchase price. The provisions of the Uniform Commercial Code regarding security interest shall have preference and apply if inconsistent with other terms of the conditions of sale. In states and localities where the Uniform Commercial Code does not apply, title to the goods shall remain in the Seller or its assigns until full payment of the purchase price. Buyer agrees to execute forthwith any and all documents in such a way and form as Seller may need for filing or recording the security interest under the Uniform Commercial Code with the proper registers or offices, or for filing or recording the conditional sales contract.

14. SALES AND USE TAX

Buyer agrees to bear and pay any sales or use tax in connection with the purchase herein, and to hold the Seller harmless from payment. At the option the Seller, Buyer shall give evidence of payment or of exemption certificate.

15. INSURANCE

The Buyer shall keep the goods insured against damage by fire, water or other casualty as required by Seller, with a company acceptable to Seller, with loss payable to Seller for the total purchase price until the Seller is fully paid. Seller, if it so elects, may place said insurance at Buyer's expense; Seller may cancel such insurance at any time and without notice and may receive the return premium, if any.

16. MODIFICATION BY SELLER

Any contract may be assigned or transferred by the Seller, or the time for the making of any payment due by Buyer may be extended by Seller without derogation of any of the rights of the Seller or its assigns. Waiver by any party of any default shall not be deemed a waiver of any subsequent default.

17. RETURNED GOODS

No goods will be accepted for return unless authorized in writing by Seller. In all cases, transportation and restocking charges will be borne by Buyer.

18. PACKING

The Buyer will be charged for export packaging or other special packing desired. Cost for cartage to ship or transfer express will be added to the invoice. No credit will be allowed if no packing is required.

19. CHANGES/CANCELLATION

NORD Gear will not accept changes in specifications to a confirmed order unless such changes are requested in writing and confirmed back in writing. In addition, the purchaser must to agree to any additional charges that may arise from the change. Placing orders on hold or cancellation of orders require Seller's written approval, and are subject to cancellation and/or restocking charges.

20. BUYER'S RESPONSIBILITY AS TO MAINTENANCE

Buyer shall use and shall require its employees and agents to use all safety devices and guards and shall maintain the same in proper working order. Buyer shall use and require its employees and agents to use safe operation procedures in operating the equipment and shall further obey and have its employees and agents obey safety instructions given by Seller. If Buyer fails to meet the obligations herein, Buyer agrees to defend, indemnify and save Seller harmless from any liability or obligation with regard to any personal injuries or property damages directly or indirectly connected with the operation of the equipment. Buyer further agrees to notify Seller promptly and in any event not later than ten (10) days after notice or knowledge of any accident or malfunction involving Seller's equipment which has caused personal injury or property damages and to cooperate fully with Seller in investigating and determining the causes of such accident and malfunction. In the event that Buyer fails to give such notice to Seller or to cooperate with Seller, Buyer shall be obligated to defend, indemnify and save Seller harmless from any such claims arising from such accident.

21. MISCELLANEOUS PROVISIONS

(a) If for any reason a provision of a contract is legally invalid, then in such event the rest of the contract shall remain in full force and affect, except that the parties shall try to replace such invalid provision closest to their original mutual intentions. (b) This Invoice and these Conditions of Sale constitute the entire agreement between the parties regarding the subject matter hereof and supercedes all prior agreements, understandings and statements, whether oral or written, regarding such subject matter. No modification to, change in or departure from, the provisions of this Invoice and Conditions of Sale shall be valid or binding on Seller, unless approved in writing by Seller. No course of dealing or usage of trade shall be applicable unless expressly incorporated into this Invoice and Conditions of Sale. Any amendments to any contract or contracts between the parties shall be valid only upon the written consent of both parties.

22. NON ASSIGNMENT BY BUYER

Contract or contracts may not be assigned by the Buyer without prior written consent of the Seller.

23. APPLICABLE LAW AND VENUE

All contracts and their interpretation are governed by the applicable, substantive laws of the State of Wisconsin. Any litigation brought by the Buyer regarding this Invoice or goods purchased hereunder may only be brought in the Circuit Court for Dane County, Wisconsin.



Send Quote Requests to info@automatedpt.com
Call +1(800)985-6929 To Order or Order Online At Nordgearmotors.com

Send Quote Requests to info@automatedpt.com Call +1(800)985-6929 To Order or Order Online At Nordgearmotors.com

# NORD GEAR LIMITED

## Terms and Conditions of Sale

**1. CONTRACT**
Any contract between Nord Gear Limited, hereinafter designated as "Seller", and the party or parties accepting these terms and conditions of sale and any agent, officer, servant, employee or subcontractor of such party or parties, hereinafter designated as "Buyer", is subject to the terms and conditions of sale hereinafter set forth. Any deviation from such terms and conditions must be specifically set forth in writing and consented to by Seller.

**2. CONFIRMATION**
An order shall be deemed accepted only when duly confirmed by Seller, at Nord Gear Limited's home office in Brampton, Ontario, and upon such confirmation the orders shall become a contract binding upon the parties hereto, their successors and assigns.

**3. PRICES**
Prices shown are list prices and may be subject to applicable discounts. Unless otherwise agreed upon in writing, prices are FOB factory Brampton, Ontario. Prices and discounts are subject to change without notice until the order is accepted. Seller's prices do not include cost of any inspection permits required.

**4. LIMITED WARRANTY**
Seller warrants the goods sold hereunder to be free from defects in material and workmanship under normal use and service not arising from misuse, negligence, or accident, including but not limited to the use, installation, and transportation of the goods by Buyer, its agents, servants, employees, or by carriers. This warranty shall pertain to any part or parts of any goods to which Buyer or its assigns has within one year from date of delivery given written notice of claimed defects to Seller. Buyer shall be required to furnish Seller with details of such defects and this warranty shall be effective as to such goods which Seller's examination shall disclose to its satisfaction to have been defective and which at Seller's option shall promptly thereafter be returned to Seller or its nominees. EXCEPT FOR THE EXPRESS WARRANTIES SET FORTH ABOVE, SELLER HAS MADE NO WARRANTIES, EXPRESS, IMPLIED OR STATUTORY, AS TO THE GOODS SOLD HEREUNDER, INCLUDING, BUT NOT LIMITED TO THEIR MERCHANTABILITY OR FITNESS FOR ANY PARTICULAR PURPOSE. ANY DESCRIPTION OR MODEL OF THE GOODS IS FOR IDENTIFICATION OR ILLUSTRATIVE PURPOSES ONLY AND SHALL NOT BE DEEMED TO CREATE AN EXPRESS WARRANTY. The Buyer's exclusive remedy for claims arising from defective or nonconforming goods shall be limited to the repair or replacement thereof at the Seller's sole option. THE SELLER SHALL NOT BE RESPONSIBLE OR LIABLE FOR CONSEQUENTIAL DAMAGES ARISING OUT OF OR IN CONNECTION WITH THE SALE, DELIVERY, USE, PERFORMANCE, OR SERVICE OF THE GOODS SOLD UNDER THIS AGREEMENT. SELLER SHALL NOT BE LIABLE FOR ANY LOST PROFITS OR FOR ANY CLAIM OR DEMAND AGAINST SELLER BY ANY PARTY. IN NO EVENT WILL SELLER BE LIABLE FOR SPECIAL, INDIRECT OR CONSEQUENTIAL DAMAGES, EVEN IF SELLER HAS BEEN ADVISED OF THE POSSIBILITY OF SUCH DAMAGES. SELLER'S AGGREGATE LIABILITY FOR DAMAGES UNDER THIS AGREEMENT, WHETHER ARISING FROM OR BASED UPON BREACH OF WARRANTY, BREACH OF CONTRACT, TORT OR OTHER CAUSE OF ACTION, SHALL IN NO CASE EXCEED THE PURCHASE PRICE THAT BUYER PAYS FOR THE PARTICULAR GOODS INVOLVED. Seller shall in no event be liable to any person or firm (including any assignee or Buyer) except Buyer and its successors. Unless specifically authorized by Seller in writing, Seller shall not become responsible for any repair work done by Buyer or any other party on any goods sold. Any costs of the return of such goods to Seller shall be borne by Buyer. Goods sold but not manufactured by Seller are being warranted as to defects in material and workmanship consistent with the limited warranty policy of the original manufacturer of the goods and if there is not such a limited warranty policy, the warranty shall be limited to the provisions of Article 4 herein. Standards for the operating characteristics of the gearboxes and the gear motors are in conformity with Seller's tests. THIS WARRANTY IS IN LIEU OF ALL OTHER EXPRESS OR IMPLIED WARRANTIES, INCLUDING ANY IMPLIED WARRANTY OF MERCHANTABILITY OR FITNESS FOR ANY PARTICULAR PURPOSE SELLER DOES NOT ASSUME, NOR DOES IT AUTHORIZE ANY PERSON TO ASSUME, ON ITS BEHALF, ANY OTHER OBLIGATION OR LIABILITY.

**5. SHORTAGE AND NONCONFORMITY**
Any claim of shortage or that the goods do not conform with the specifications of the order or model must be made in writing within ten (10) days after delivery of the goods (as to which such claim is made) to Buyer or its nominees, but in no event shall the claim be later than within the time limit provided by the carrier or insurance company, otherwise such claim shall be deemed waived. The samples, measurements, dimensions and weights contained in Seller's catalogs, sales manuals, photographs and drawings constitute only an approximate guide. Seller reserves the right to make any changes which Seller, in its absolute discretion, considers necessary. While the goods will be delivered principally according to specifications of standards or quantities agreed upon, insignificant deviations or insignificant changes in construction are permissible. The same applies to partial deliveries. In the event that Buyer has a verified claim of shortage or nonconformity of the goods to the specifications of the order or the model, and if such claim has been submitted within the required time limit as set forth above, Seller shall, at its own expense, make up for the shortage of the goods, or replace or repair the goods, as the cause may be, but in no event shall Seller be or become liable to Buyer or to any other person or persons for any loss in damage, direct or indirect, arising out of or caused by such incidents or for the loss of profits, business of good will. Shipping dates are estimates unless parties expressly agree on time of the essence.

**6. FORCE MAJEURE**
The obligation of Seller shall be modified or excused, as the case may be, for reasons of Acts of God, war, governmental law regulations, strikes or lock-outs, fire, breakdown of machinery, whether in its own business enterprise, or if for any other cause beyond Seller's control, the goods cannot be delivered or their delivery becomes delayed in whole or in part. In the above instances time for delivery shall be extended for the period of the delay caused, with the proviso, however, that either party may cancel in writing the undelivered portion of the order of contract if the delay exceeds six (6) months from the delivery date originally confirmed by Seller. In no event shall Seller become liable in the aforesaid instances to Buyer or any third party for consequential damages or business loss.

**7. SHIPMENT AS UNIT**
Each shipment by Seller shall be treated as a separate and distinct unit with respect, but only with respect to forwarding, terms of payment, and the making of claims by Buyer; provided, however, that if Buyer defaults in the payment of any obligation to Seller or any installments thereof, under any agreement between Buyer and Seller, or if Buyer refuses to accept any goods when tendered for delivery, Seller may, on fifteen (15) days written notice to Buyer, without prejudice to Seller's other lawful remedies, either defer further performance until the defaulted payments are made in full, or make future deliveries for cash in advance only, or to treat the entire contract or contracts with Buyer as breached by Buyer and pursue its remedies for breach.

**8. BUYER'S REFUSAL OF D** ELIVERY
If Buyer refuses to accept delivery of any goods tendered for delivery, then Seller, without prejudice to Seller's other lawful remedies, may either store or cause such goods to be stored in a warehouse, for Buyer's account and at Buyer's cost, risk and expense, or sell such goods (without notice) to any purchaser at public or private sale, and hold Buyer liable for any difference between (A) the contract price of the goods, and (B) the price at which goods are resold less the costs and expense of such resale including brokerage commissions, or restocking charges.

**9. GOODS IN TRANSIT**
If prior to delivery or while the goods are in transit, Buyer or Seller becomes bankrupt or insolvent, or any petition in bankruptcy or for the reorganization or for appointment of a receiver is filed against Buyer or Seller, as the case may be, then the other party hereto may forthwith terminate this contract by giving written notice of such termination. Such termination shall not affect any claim for damages available to Buyer, to Seller, as actually paid in money, is abated by any order of judgment entered or any plan adopted in any bankruptcy, reorganization, receivership, or similar proceeding. Such termination shall not prejudice Seller's rights to any amounts then due under the contract. If Buyer becomes bankrupt or insolvent or any petition in bankruptcy or for reorganization or if a state court receivership is filed against Buyer, then, at its option, Seller may take possession of any goods theretofore sold to Buyer, in connection with which the full purchase price has not been paid, analogous to the terms and provisions set forth in Paragraphs 11 and 12 hereinafter.

**10.DELIVERY**
(A)Unless otherwise agreed, delivery of the goods to any carrier shall constitute delivery to Buyer, and thereafter the risk of loss or damage to the goods shall be upon Buyer. (B) If Buyer does not give delivery instructions to Seller at least ten (10) days prior to the delivery date ex factory confirmed by Seller, Seller may deliver the goods to a carrier of its own choosing, at Buyer's cost and risk, or, at Seller's option may store the goods on the pier or on any warehouse at Buyer's cost and risk. Any purchase price in such event becomes due and payable within ten (10) days of such storage.

**11. PAYMENT OF PURCHASE PRICE**
Time of payment is of the essence under the contract. Upon default in any of the terms of the contract, or failure to comply with any of the conditions thereof, or upon seizure of the property under execution or other legal process, or if Buyer becomes bankrupt or insolvent, or any petitions for reorganization or for appointment of a receiver is filed against Buyer, or if Buyer makes any assignment for the benefit of its creditors or otherwise sells, encumbers or disposes of the goods, or if for any other reason Seller should deem itself insecure, the full amount of the purchase price then remaining unpaid shall at once become due and payable at the option of Seller. Interest on the delinquent payment from the due date thereof until paid shall be at a rate of two (2%) percent per month.

**12. BUYER'S DEFAULT**
Upon Buyer's default, Seller may dispose of the merchandise in any manner that it deems fit and, if it desires to resell same, may do so at private or public sale, with or without notice, and with or without the property being at the place of sale, subject, however, to applicable laws. Seller or its assigns shall have the right to bid at such sale and may become the purchaser of the property. The proceeds of the sale shall first be applied to the expenses incurred in retaking, repairing, storing and selling the goods; reasonable solicitor's fees included, and then shall be applied to the payment of the balance due under the contract. Any surplus amount shall be paid to Buyer. If a deficiency results after the sale, Buyer agrees to pay such forthwith, together with reasonable solicitor's fees, for the recovery of the goods incurred by Seller. If upon Buyer's default, Seller elects not to resell any goods which it may repossess, then the cost of repossession, including reasonable solicitor's fees, shall forthwith be due and payable from Buyer to Seller.

**13. SECURITY INTEREST AND TITLE**
In provinces which are governed by a Personal Property Security Act, this contract shall serve as a security agreement, reserving in Seller a security interest until full payment of the purchase price. The provisions of the Personal Property Security Act regarding security interest shall have preference and apply if inconsistent with other terms of the conditions of sale herein. In provinces where a Personal Property Security Act does not apply, title to the goods shall remain in the Seller or its assigns until full payment of the purchase price. Buyer agrees to execute forthwith any and all documents in such a way and form as Seller may need for filing or recording the security interest under a Personal Property Security Act with the proper registers or offices, or for filing or recording the Conditional Sales Contract herein.

**14. SALES AND USE** TAX
Seller's prices do not include sales, use, excise or other taxes payable to any governmental authority in respect of the sale of Seller's goods. Buyer shall pay, in addition to Seller's price, the amount of any such taxes or shall reimburse Seller for the amount thereof that Seller may be required to pay. At the option of Seller, Buyer shall give evidence of payment or of exemption certificate.

**15. INSURANCE**
Buyer shall keep the goods insured against damage by fire, water or other casualty as required by Seller, with a company acceptable to Seller, with loss payable to Seller for the total purchase price until Seller is fully paid. Seller, if it so elects, may place said insurance at Buyer's expense; Seller may cancel such insurance at any time and without notice and may receive the return premium, if any.

**16. MODIFICATION BY SELLER**
Any contract may be assigned or transferred by Seller, or the time for the making of any payment due by Buyer may be extended by Seller without derogation of any of the rights of Seller or its assigns. Waiver by any party of any default shall not be deemed a waiver of any subsequent default.

**17. RETURNED GOODS**
No goods will be accepted for return unless authorized in writing by Seller. In all cases, transportation and restocking charges will be borne by Buyer.

**18. PACKING**
Seller does not charge for standard packaging for domestic shipment. Buyer will be charged, however, for export packaging or other special packing desired. Cost for cartage to ship or transfer express will be added to the invoice. No credit will be allowed if no packing is required.

**19. EXPORT ORDER**
Export orders are to be accompanied by a confirmed irrevocable Letter of Credit in Seller's favor, in Canadian currency, with an accredited Canadian bank, subject to Seller's draft, with shipping documents attached.

**20. CANCELLATION**
Placing orders on hold or cancellation of orders require Seller's written approval, and are subject to cancellation and/or restocking charges.

**21. BUYER'S RESPONSIBILITY AS TO MAINTENANCE**
Buyer shall use and shall require its employees and agents to use all safety devices and guards and shall maintain the same in proper working order. Buyer shall use and require its employees and agents to use safe operating procedures in operating the equipment and shall further obey and have its employees and agents obey safety instructions given by Seller. If Buyer fails to meet the obligations herein, Buyer agrees to indemnify and save Seller harmless from any liability or obligation with regard to any personal injuries or property damages directly or indirectly connected with the operation of the equipment. Buyer further agrees to notify Seller promptly and in any event not later than ten (10) days after notice or knowledge of any accident or malfunction involving Seller's equipment which has caused personal injury or property damages and to cooperate fully with Seller in investigating and determining the causes of such accident and malfunction. In the event that Buyer fails to give such notice to Seller or to cooperate with Seller, Buyer shall be obligated to indemnify and save Seller harmless from any such claims arising from such accident.

**22. MISCELLANOUS PROVISIONS**
(A)If for any reason a provision of a contract is legally invalid, then in such event the rest of the contract shall remain in full force and affect, except that the parties shall try to replace such invalid provision with a provision closest to their original mutual intentions. (B) Any amendments to any contract or contracts require the consent in writing by both parties. Headings in this document are for ease of reference only.

**23. NON ASSIGNMENT BY BUYER**
Contract or contracts may not be assigned by Buyer without prior written consent of Seller.

**24. APPLICABLE LAW**
This agreement shall be governed by the laws of the Province of Ontario and the applicable laws of Canada. Buyer and Seller agree that any judicial proceeding with respect to this agreement must be brought and maintained in the City of Toronto, In the Province of Ontario.

**25.**
This instrument sets forth the entire understanding and agreement of the parties hereto in respect of the subject matter hereof, and all prior undertaking between the parties hereto, together with all representations and obligations of such parties in respect of such subject matter, shall be superseded by and merged into this instrument.

**26.**
The provisions of this agreement shall bind and ensure to the benefit of the parties hereto and their respective heirs, executors, administrators, successors and (subject to any restrictions or assignment herein above set forth) assigns, as the case may be.

**27.**
The parties acknowledge that they have requested this document and all notices or other documents relating thereto be drafted in the English language.

Les parties reconnaissent qu'ils ont requis que ce contrat et tous les avis ou autres documents qui s'y rapportent soient rédiges en langue anglaise.

"Terms and Conditions in French available upon request."


Send Quote Requests to info@automatedpt.com
Call +1(800)985-6929 To Order or Order Online At Nordgearmotors.com

Send Quote Requests to info@automatedpt.com
Call +1(800)985-6929 To Order or Order Online At Nordgearmotors.com



## Mounting Positions

The reducer mounting position determines the approximate oil fill level and the appropriate vent location. In some cases mounting position may dictate possible variation in final reducer assembly. If considering any mounting positions that are not shown as catalog-standard options, it is critical that the customer consult with NORD prior to ordering.

### In-line

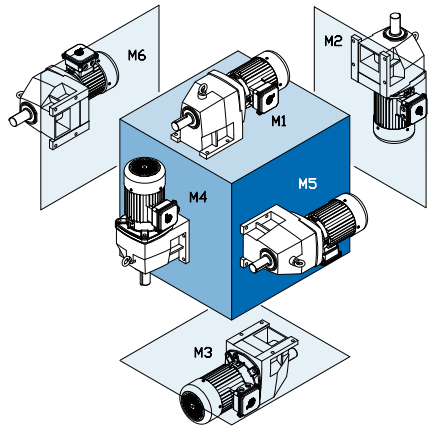


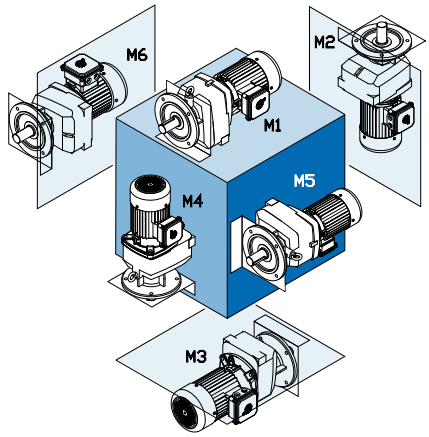


### Clincher™

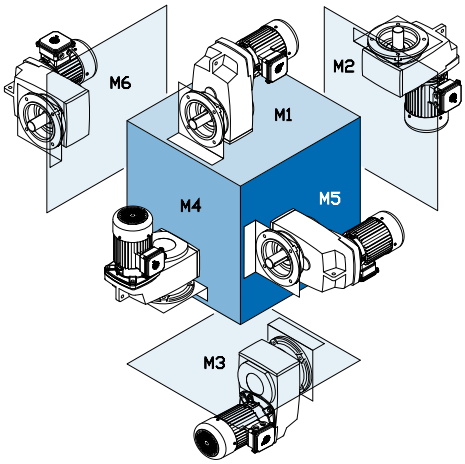


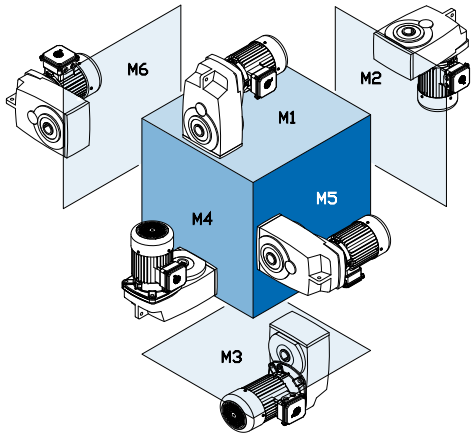


### Right-Angle

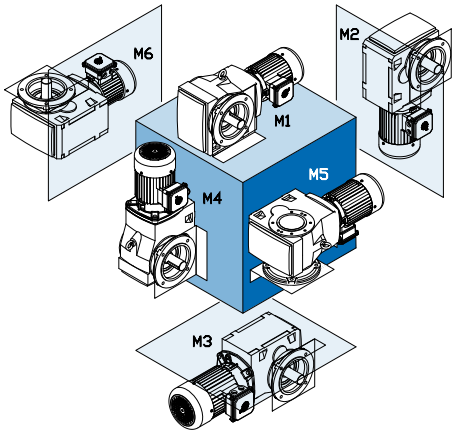


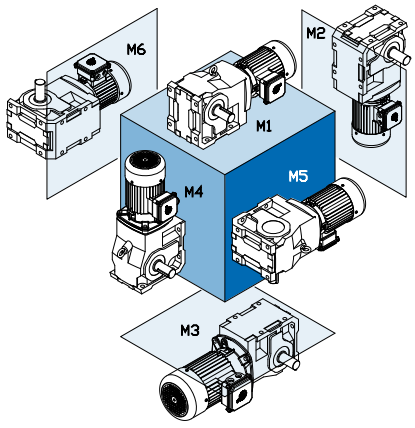



Send Quote Requests to info@automatedpt.com
Call +1(800)985-6929 To Order or Order Online At Nordgearmotors.com

DRIVESYSTEMS

# Mounting Positions

## Mounting Configuration

NORD provides gearmotors, speed reducers and motors that can be configured very flexibly to suit customer needs. When ordering it is beneficial that the drive be specified exactly the way you want it delivered.

**Mounting Positions**

### Basic mounting

❍ M1 ❍ M2 ❍ M3 ❍ M4 ❍ M5 ❍ M6

### Right-angle with solid shaft

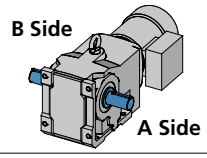


❍ Shaft Side A
❍ Shaft Side B
❍ Shaft Side A+B

### Right-angle with shrink disc

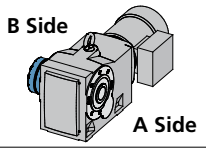


❍ Shrink Disc Side A
❍ Shrink Disc Side B

### Right-angle flange mount units

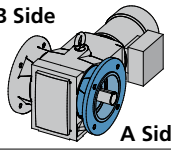


❍ Flange Side A
❍ Flange Side B
❍ Flange Side A+B

### Right-angle with hollow shaft cover

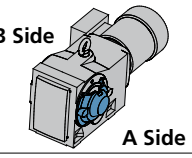


❍ Hollow Shaft Cover Side A
❍ Hollow Shaft Cover Side B

### Right-angle with torque arm

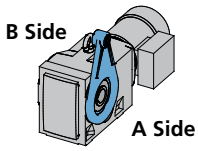


❍ Torque Arm Side A
❍ Torque Arm Side B

**Shaft mount torque arm orientation**

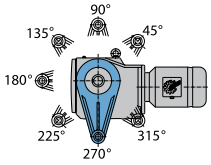


Orientation _____

| | |
|---|---|
| 92 - Bevel | 90° - 315°, Every 45° |
| 90 - Bevel | 45° - 270°, Every 45° |
| Helical-worm | 45° - 270°, Every 45° |
| Helical-worm 02040 | 90°, 180°, 270°, Every 90° |

### Bottom mount torque arm

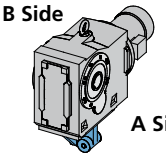


❍ Torque Arm Side A
❍ Torque Arm Side B

### Brake motor with hand release lever

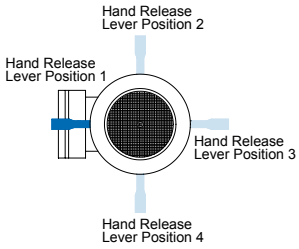


❍ Hand Release Lever Pos. 1
❍ Hand Release Lever Pos. 2
❍ Hand Release Lever Pos. 3
❍ Hand Release Lever Pos. 4

### Terminal box location

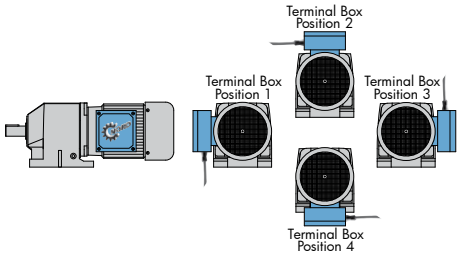


❍ Terminal Box Position 1 ❍ Terminal Box Position 3
❍ Terminal Box Position 2 ❍ Terminal Box Position 4

### Conduit entry location

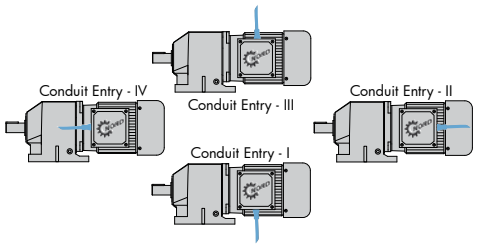


❍ Conduit Entry Location I* ❍ Conduit Entry Location III*
❍ Conduit Entry Location II ❍ Conduit Entry Location IV


Send Quote Requests to info@automatedpt.com
Call +1(800)985-6929 To Order or Order Online At Nordgearmotors.com

Send Quote Requests to info@automatedpt.com Call +1(800)985-6929 To Order or Order Online At Nordgearmotors.com

# Mounting Positions

## Mounting Positions

The reducer mounting position determines the approximate oil fill level and the appropriate vent location. In some cases mounting position may dictate possible variation in final reducer assembly. If considering any mounting positions that are not shown as catalog standard options, it is critical that the customer consult with NORD prior to ordering.

## New Mounting Position System

NORD is in the processes of changing mounting position systems. Historically the NORD mounting position system was based on international motor standards. NORD is changing in an effort to simplify the system. The new system is based on the six sides of a cube. Below is a cross reference between the old and new mounting position codes.

**Mounting Position Cross Reference Table (old to new)**

| Helical Gear Units (In-line) | | Parallel Shaft Gear Units (Clincher™) | | Helical-bevel Gear Units | | Helical-worm Gear Units | |
|---|---|---|---|---|---|---|---|
| Old | New | Old | New | Old | New | Old | New |
| B3 | M1 | H1 | M1 | B3 | M1 | B3 | M1 |
| B5 | M1 | H2 | M3 | B3I | M4 | B3I | M4 |
| B5I | M3 | H3 | M6 | B5 | M2 | B5 | M2 |
| B5II | M5 | H4 | M5 | B5I | M1 | B5I | M1 |
| B5III | M6 | H5 | M4 | B5II | M4 | B5II | M4 |
| B6 | M5 | H6 | M2 | B5III | M3 | B5III | M3 |
| B7 | M6 | | | B6 | M2 | B6 | M2 |
| B8 | M3 | | | B6I | M1 | B6I | M1 |
| V1 | M4 | | | B6II | M4 | B6II | M4 |
| V3 | M2 | | | B8 | M3 | B8 | M3 |
| V5 | M4 | | | B8I | M2 | B8I | M2 |
| V6 | M2 | | | H1 | M1 | H1 | M1 |
| | | | | H2 | M3 | H2 | M3 |
| | | | | H3 | M4 | H3 | M4 |
| | | | | H4 | M2 | H4 | M2 |
| | | | | H5 | M5 | H5 | M5 |
| | | | | H6 | M6 | H6 | M6 |
| | | | | V1 | M5 | V1 | M5 |
| | | | | V3 | M6 | V3 | M6 |
| | | | | V5 | M5 | V5 | M5 |
| | | | | V5I | M5 | V5I | M5 |
| | | | | V6 | M6 | V6 | M6 |
| | | | | V6I | M6 | V6I | M6 |

**Mounting Position Cross Reference Table (new to old)**

| Helical Gear Units (In-line) | | Parallel Shaft Gear Units (Clincher™) | | Helical-bevel Gear Units | | Helical-worm Gear Units | |
|---|---|---|---|---|---|---|---|
| New | Old | New | Old | New | Old | New | Old |
| M1 | B3, B5 | M1 | H1 | M1 | B3, B5I, B6I, H1 | M1 | B3, B5I, B6I, H1 |
| M2 | V3, V6 | M2 | H6 | M2 | B5, B6, B8I, H4 | M2 | B5, B6, B8I, H4 |
| M3 | B5I, B8 | M3 | H2 | M3 | B5III, B8, H2 | M3 | B5III, B8, H2 |
| M4 | V1, V5 | M4 | H5 | M4 | B3I, B5II, B6II, H3 | M4 | B3I, B5II, B6II, H3 |
| M5 | B5II, B6 | M5 | H4 | M5 | H5, V1, V5, V5I | M5 | H5, V1, V5, V5I |
| M6 | B5III, B7 | M6 | H3 | M6 | H6, V3, V6, V6I | M6 | H6, V3, V6, V6I |


Send Quote Requests to info@automatedpt.com
Call +1(800)985-6929 To Order or Order Online At Nordgearmotors.com

NORD DRIVESYSTEMS

# PRODUCT OVERVIEW

We can match our NORDAC Frequency Inverters with our Inverter/Vector Duty Motors and UNICASE™ Speed Reducers to provide a total AC Motor Drive solution from one trusted source.

## UNICASE™ SPEED REDUCERS



**HELICAL IN-LINE**
- Foot or Flange Mount
- Torque up to 205,000 lb-in
- Gear ratios – 1.82:1 to over 300,000:1



**NORDBLOC®.1 HELICAL IN-LINE**
- Foot or Flange Mount
- Torque up to 26,550 lb-in
- Gear ratios – 1.88:1 to over 370:1

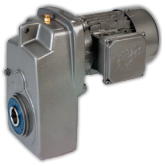

**PARALLEL HELICAL CLINCHER™**
- Shaft, Flange or Foot Mount
- Torque up to 797,000 lb-in
- Gear ratios – 4.26:1 to over 300,000:1

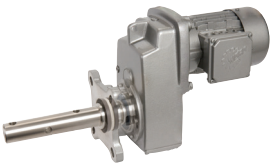

**SCP SCREW CONVEYOR PACKAGE**
- Shaft, or Flange Mount
- Torque up to 53,100 lb-in
- Gear ratios – 4.32:1 to over 1500:1



**RIGHT ANGLE HELICAL-BEVEL 2-STAGE**
- Foot, Flange or Shaft Mount
- Torque up to 5,840 lb-in
- Gear ratios – 4.1:1 to 70:1

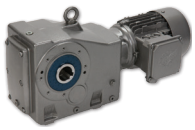

**RIGHT ANGLE HELICAL-BEVEL**
- Foot, Flange or Shaft Mount
- Torque up to 283,000 lb-in
- Gear ratios – 8.04:1 to over 300,000:1

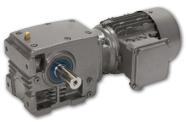

**RIGHT ANGLE HELICAL-WORM**
- Foot, Flange or Shaft Mount
- Torque up to 27,585 lb-in
- Gear ratios – 4.40:1 to over 300,000:1

## HIGH PERFORMANCE MOTORS & BRAKEMOTORS



**INVERTER/VECTOR DUTY**
- Standard or Energy Efficient
- Integral, NEMA or Metric IEC
- 1/6 to 250 hp

## UNICASE™ SPEED REDUCERS



**MINICASE™ RIGHT ANGLE WORM**
- Foot, Flange or Shaft Mount
- Torque up to 3,540 lb-in
- Gear ratios – 5:1 to 500:1

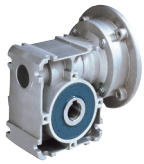

**FLEXBLOC™ WORM**
- Modular bolt-on options
- Torque up to 4,683 lb-in
- Gear ratios – 5:1 to 3,000:1

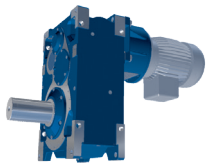

**MAXXDRIVE™ LARGE INDUSTRIAL GEAR UNITS PARALLEL HELICAL**
- Modular bolt-on options
- Torque up to 2,027,000 lb-in
- Gear ratios – 5:1 to 1,600:1

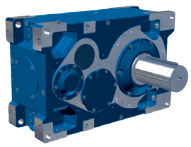

**MAXXDRIVE™ LARGE INDUSTRIAL GEAR UNITS HELICAL-BEVEL**
- Modular bolt-on options
- Torque up to 2,027,000 lb-in
- Gear ratios – 5:1 to 1,600:1

## NORDAC AC VECTOR DRIVES



**SK180E FAMILY**
- Distributed, simple speed control
- 380-480V, 3-phase to 3.0 hp
- 200-240V, 3-phase to 1.5 hp
- 200-240V, 1-phase to 1.5 hp
- 100-120V, 1-phase to 0.75 hp



SK200E **FAMILY**
- Distributed, high performance
- 380-480V, 3-phase to 30 hp
- 200-240V, 3-phase to 15 hp
- 200-240V, 1-phase to 1.5 hp
- 100-120V, 1-phase to 1 hp



**SK500E FAMILY**
- Compact, cabinet mount, high performance
- 380-480V, 3-phase, to 125 hp
- 200-240V, 3-phase, to 25 hp
- 200-240V, 1-phase, to 3 hp
- 100-120V, 1-phase, to 1.5 hp

Send Quote Requests to info@automatedpt.com
Call +1(800)985-6929 To Order or Order Online At Nordgearmotors.com



www.nord.com

**NORD Gear Corporation**
National Customer Service Toll-Free: 888.314.6673
Info.us@nord.com

**NORD Gear Limited**
Toll-Free in Canada: 800.668.4378
info.ca@nord.com

**WEST**
Corona, CA (Los Angeles)
Phone: 951.393.6565

**MIDWEST**
Waunakee, WI (Madison)
Phone: 608.849.7300

**EAST**
Charlotte, NC
Phone: 980.215.7575

**CANADA**
Brampton, ON (Toronto)
Phone: 905.796.3606

100200001/2719

Send Quote Requests to info@automatedpt.com
Call +1(800)985-6929 To Order or Order Online At Nordgearmotors.com