Send Quote Requests to info@automatedpt.com Call +1(800)985-6929 To Order or Order Online At Nordgearmotors.com

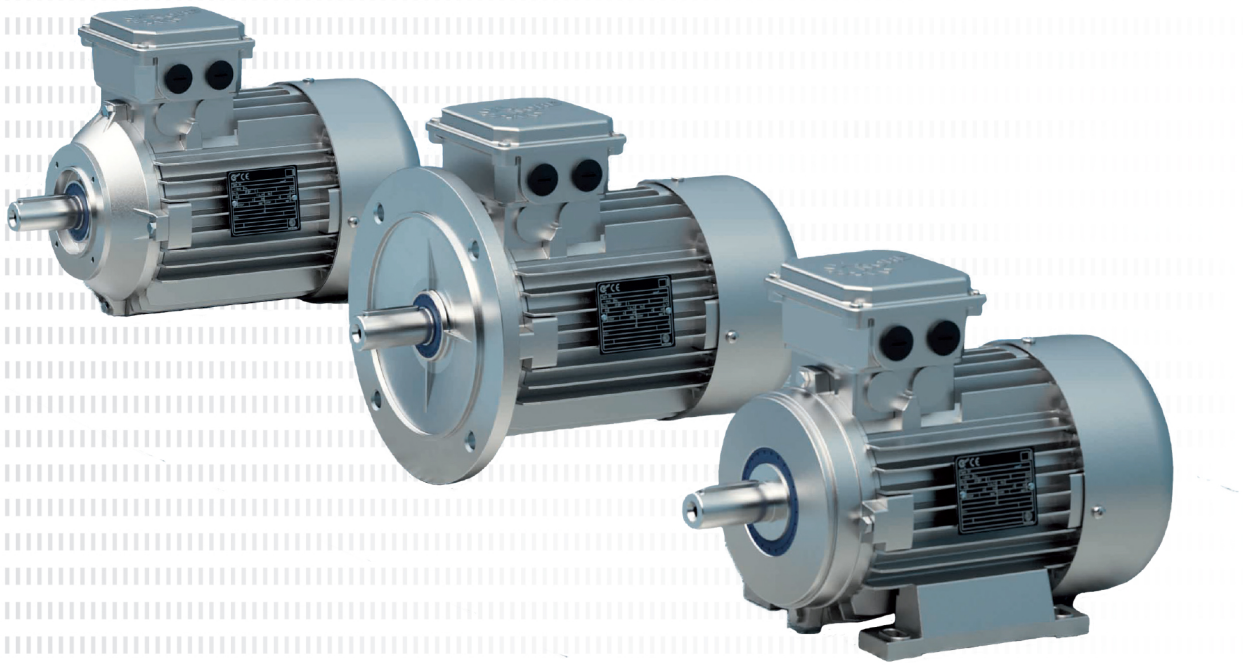

M7000

Motors and Brakemotors

NORD DRIVESYSTEMS

Send Quote Requests to info@automatedpt.com
Call +1(800)985-6929 To Order or Order Online At Nordgearmotors.com

NORD DRIVESYSTEMS

Complete drive solutions from a single source

NORD Delivers

NORD offers first-class customer service and support along with full-featured drive solutions that can tackle the toughest requirements. All components are carefully selected and precisely configured to meet your exact specifications. In the rare case that standard components won't meet your needs, our in-house engineering team will work with you to design custom components or a complete customized system.

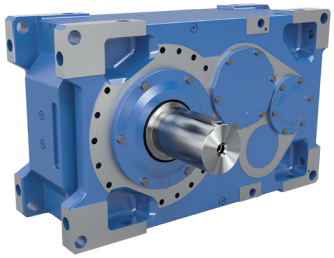

Reduce Lead Times and Decrease Inventory

- Fastest lead times in the industry with NO expedite fees
- Over 20,000,000 standard configurations to reduce or eliminate the need for custom components
- Modular drives, motors, and electronic controls minimize inventory of replacement units and parts

Global Product Designs, Standards, and Support

- Innovative, industry-standard products to support a wide range of applications
- Global sales and support network
- Dedicated mechanical and electrical application engineers ready to assist you
- Online resources available to you any time
- 24/7/365 emergency breakdown service

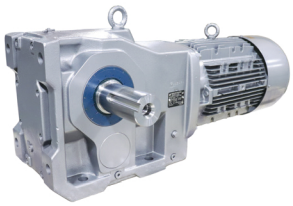

Increase Efficiency and Reduce Operation Costs

- myNORD online tools for fast selection, configuration, ordering, and tracking of your drive units
- Drive systems that are perfectly matched to your application for optimum performance and energy efficiency
- Program personalization, such as weekly shipment schedules and custom nameplates
- Partner with a company that is easy to do business with and wants to see you succeed!

Send Quote Requests to info@automatedpt.com
Call +1(800)985-6929 To Order or Order Online At Nordgearmotors.com

Send Quote Requests to info@automatedpt.com
Call +1(800)985-6929 To Order or Order Online At Nordgearmotors.com

Contents

INTRODUCTION 2

GLOBAL STANDARDS 4

ORDERING GUIDE 14

ENGINEERING DATA. 15
- Inverter/vector duty operation. 24
- Mounting positions. 29
- Connection diagrams 30

MOTOR OPTIONS. 33
- Motor connections 43
- Encoders 45

BRAKES. 51
- Selection 52
- Options 57
- Rectifiers 61
- Connections. 76

RATINGS 87
- 230/460V 60Hz 88
- 115/230V 60Hz 94
- 575V 60Hz 95
- 400V 50Hz 99
- 230V 50Hz 102

DIMENSIONS. 103
- NEMA Footed 104
- NEMA C-face 106
- IEC B3 118
- IEC B5 120
- IEC B14 132
- Conduit box and cable entry. 134

Send Quote Requests to info@automatedpt.com
Call +1(800)985-6929 To Order or Order Online At Nordgearmotors.com

Send Quote Requests to info@automatedpt.com Call +1(800)985-6929 To Order or Order Online At Nordgearmotors.com

Introduction

Electric drives in industrial applications consume up to 70% of the total energy required, leaving many companies searching for energy efficient solutions. NORD's wide range of electric motors exceeds many of the global efficiency regulations and standards for superior drive performance and energy optimization. Our modular product portfolio of gear units, motors, and electronic control products delivers a complete drive solution from a single source.

NORD motors are not only powerful and robust, but also feature high gear ratios, direct motor mounting options, toothed motor shafts, and a compact design for space-saving installation. Whether in agitators, conveyor systems, intralogistics, or the food and beverage industry, NORD electric motors deliver high performance, reliability, and long service life - saving operational costs, energy, and protecting the environment.

Asynchronous Low Voltage Motors

The motors listed in this catalog are asynchronous low voltage motors that can be used as geared motors or stand-alone motors.

This catalog only includes motors from our own production in the power range 0.16 to 75 hp. Information about motors with powers greater than 75 hp and special motors such as submersible motors or pot motors is available on request.

Information about Atex motors can be found in Catalog G2122.

Efficiency Classes IE1, IE2, IE3, IE4

The standard IEC 60034-30:2008 specifies efficiency classes and forms the basis for the various national efficiency requirements. In parallel with this, the standard IEC 60034-2-1:2007 harmonizes the methods for measuring efficiencies. Requirements regarding motor energy efficiency are to be observed worldwide.

NORD provides information on this under:
www.nord.com / Products / Energy Efficiency Drives / National Regulations

IE2/IE3 - Technical differences

Motors with efficiency class IE2/IE3 differ considerably from IE1 motors. Increased efficiency is achieved by using additional high quality materials in combination with advanced production methods and design solutions. NORD's IE2/IE3 motors share the same overall dimensions of many lower efficiency classes for easy drop in replacement with only a few exceptions. When upgrading from IE1 to IE2/IE3, changed values of the motors must also be taken into account (e.g. higher starting torques, higher breakdown torques, higher speeds, higher power reserves, higher weight).

IE3 - Premium

Motors with efficiency class IE3 achieve greater efficiency with increased thermal reserves and possibilities for use. In the standard power range, NORD IE3 motors retain the same standard overall dimensions as lower efficiency motors. A wide voltage range allows for motors to operate as IE2, but IE3 efficiency levels cannot be guaranteed. 4-pole IE3 motors are additionaly suitable for 50Hz and 60Hz, enabling them to operate worldwide.

Send Quote Requests to info@automatedpt.com
Call +1(800)985-6929 To Order or Order Online At Nordgearmotors.com

Send Quote Requests to info@automatedpt.com
Call +1(800)985-6929 To Order or Order Online At Nordgearmotors.com

IE4 / IE5 - The next level

Motors with efficiency class IE4 achieve an even greater efficiency level than optimized IE3 motors. NORD has developed permanent magnet synchronous motors (PMSM) for electronic operation with a power range up to 7 hp. These motors are ideal for use in energy intensive applications such as intralogistics.

IE5+ PMSM motors currently have the highest efficiencies on the market and conform to worldwide approvals and acceptance. Further information about IE5+ motors can be found in NORD's M5000 catalog.

Global Standards

The following tables summarize the essential facts about energy efficient motors for the global market. The regulations for energy efficiency only apply to motors which are operated in S1 mode (continuous operation) as the frequent starting of motors is not energy-efficient.

All energy directive overviews may be found at on the NORD website.

Note:

This catalog was produced with the greatest care on the basis of the present legal situation. We cannot accept any warranty for technical changes. Please note that standards and directives are subject to constant change. Even though we make every endeavor to ensure that this information is correct, this document cannot provide a substitute for a study of the relevant directives or import regulations.

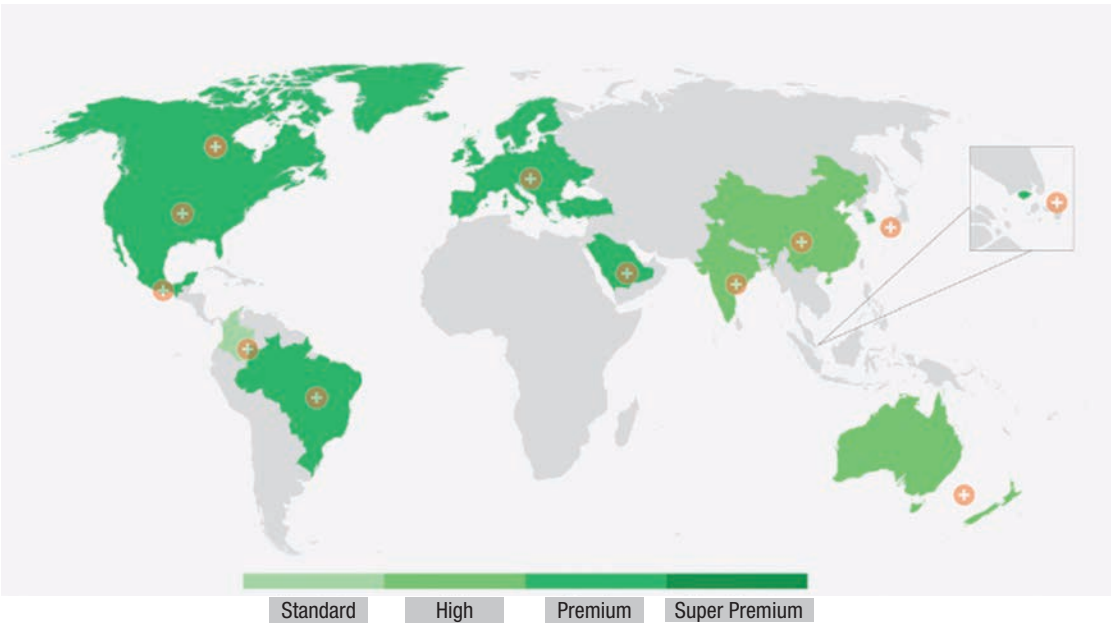

Send Quote Requests to info@automatedpt.com
Call +1(800)985-6929 To Order or Order Online At Nordgearmotors.com

Send Quote Requests to info@automatedpt.com Call +1(800)985-6929 To Order or Order Online At Nordgearmotors.com

Global Standards and Directives

NORD motors are

- constructed according to IEC 60034 Part 1, 2, 5 ... 9, 11, 12, 14, 30 and have a CE label
- enclosed, self-ventilated squirrel cage motors in three or single phase versions
- also available according to the following standards, recommendations, and classifications:

NEMA

NORD energy-efficient motors

IE1, IE2, IE3	Efficiency classes according to IEC 60034-30
CC 092A	EISAct efficiency classification (USA) - ee
AR	Brazilian efficiency classification
KR	Korean efficiency classification

China Compulsory Certification
Nr.: 200 701 040 125 842 9

EAC certificate for import into the Eurasian Customs Union

CE labeling of products which comply with EU directives

Regulation of the National Electrical Manufacturers Association

CSA approved energy-saving motors (High Efficiency)
File No.: 1305200
Master Contract: 189340

CSA and CUS approved motors 63 SP/4 – 250 WP/4
File No.: 1293961 (LR112560)
Master Contract: 189340

UL listed motors
63 S - 180 LX File No.: 191510

Information about explosion protected motors (ATEX 2014/34 EU) can be found in NORD catalog G2122 or on www.nord.com under the documentation tab.

Send Quote Requests to info@automatedpt.com
Call +1(800)985-6929 To Order or Order Online At Nordgearmotors.com

NORD DRIVESYSTEMS

United States of America

Efficiency Standard	NEMA MG 1
Efficiency Regulations	EISA 2007 + 2014 EISA Expansion Ruling (DOE Amendment 10 CFR Part 431)
Minimum Efficiency Level	Premium Efficiency (IE3)
Applicable to NEMA MG 1, Table 12-12 (IEC 600034-30, Class IE3)	▸ 1.0 – 500.0 hp (0.75 – 375 kW) ▸ 2, 4, 6, 8 pole ▸ All voltages ≤ 600V ▸ 60Hz (AC) line power ▸ Rated continuous duty (S1) ▸ Single-speed, induction motor ▸ Frames: NEMA 56 (IEC 80) and larger ▸ Design: NEMA design A, B, or C IEC design N or H ▸ VFD rated motors that can also operate DOL ▸ Includes integral gearmotors and brakemotors, partial electric motors, TENV designs, or U-frame
Exceptions	▸ Multi-speed motors ▸ Single-phase motors ▸ Motors labeled for intermittent or periodic duty (S2 – S8) ▸ Motors designed for VFD operation (that cannot be line-powered) ▸ Submersible and water-cooled motors
Required Efficiency Labeling	pe CC092B Efficiency level and DOE registration number must appear on nameplate
Future	Additional rulings are expected to mandate higher efficiency requirements for motors in frame sizes NEMA 42-48-56 (IEC-63-71-80). Efficiency mandates already exists for small open drip proof motors per DOE rule 10 CFR Part 31.

Send Quote Requests to info@automatedpt.com
Call +1(800)985-6929 To Order or Order Online At Nordgearmotors.com

Send Quote Requests to info@automatedpt.com Call +1(800)985-6929 To Order or Order Online At Nordgearmotors.com

Global Standards and Directives

Canada

Efficiency Standard	CSA C390-10
Efficiency Regulations	Energy Efficient Regulations (EER 2017)
Minimum Efficiency Level	Premium Efficiency (IE3)
Applicable to Premium Efficient NEMA MG 1, Table 12-12 (IEC 600034-30, Class IE3)	▸ 1.0 – 500.0 hp (0.75 – 375 kW) ▸ 2, 4, 6, 8 pole ▸ All voltages ≤ 600V ▸ 50 and 60Hz (AC) line power ▸ Rated continuous duty (S1) ▸ Single-speed, induction motor ▸ VFD rated motors that can also be operated directly ▸ Design: NEMA design A, B, or C with three or four digit number Closed NEMA design A, B, or C size 56 or larger IEC design N or H size 80 or larger ▸ IP code from 00 to 67
Exceptions	▸ Multi-speed motors ▸ Single-phase motors ▸ Motors labeled for intermittent or periodic duty (S2 – S8) ▸ Motors designed for VFD operation (that cannot be line-powered)
Required Efficiency Labeling	C US Efficiency level must appear on nameplate

Send Quote Requests to info@automatedpt.com
Call +1(800)985-6929 To Order or Order Online At Nordgearmotors.com

Mexico

Efficiency Standard	CSA C390-10
Efficiency Regulations	Energy Efficient Regulations (EER 2017)
Minimum Efficiency Level	Premium Efficiency (IE3)
Applicable to Premium Efficient NEMA MG 1, Table 12-12 (IEC 600034-30, Class IE3)	▸ 1.0 – 500.0 hp (0.75 – 375 kW) ▸ 2, 4, 6, 8 pole ▸ All voltages ≤ 600V ▸ 50 and 60Hz (AC) line power ▸ Rated continuous duty (S1) ▸ Single-speed, induction motor ▸ VFD rated motors that can also be operated directly ▸ Design: NEMA design A, B, or C with three or four digit number Closed NEMA design A, B, or C size 56 or larger IEC design N or H size 80 or larger ▸ IP code from 00 to 67
Exceptions	▸ Multi-speed motors ▸ Single-phase motors ▸ Motors labeled for intermittent or periodic duty (S2 – S8) ▸ Motors designed for VFD operation (that cannot be line-powered)
Required Efficiency Labeling	C US Efficiency level must appear on nameplate

Send Quote Requests to info@automatedpt.com
Call +1(800)985-6929 To Order or Order Online At Nordgearmotors.com

Send Quote Requests to info@automatedpt.com Call +1(800)985-6929 To Order or Order Online At Nordgearmotors.com

Global Standards and Directives

Europe

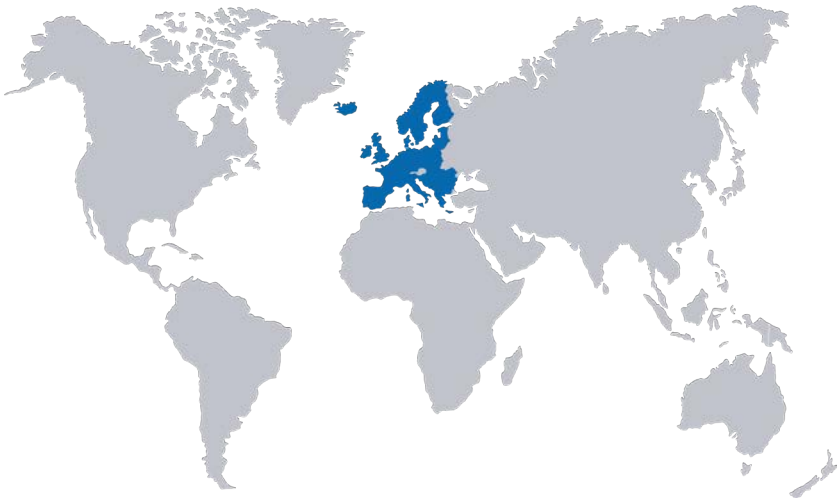

Efficiency Standard	IEC 60034-30
Efficiency Regulations	REGULATION (EU) 2019/1781 Ecodesign Directive 2009/125/EG
Minimum Efficiency Level	IE3 for motors from 0.75 – 1000 kW IE2 for motors from 0.12 – 0.75 kW IE2 for variable speed drives from 0.12 – 1000 kW (motor rated output power)
Applicable to	▸ 3-phase induction (asynchronous) motors ▸ 2, 4, 6, 8 pole ▸ 50 – 1000V ▸ 50, 60, or 50/60Hz (AC) line power ▸ Motors designed for continuous load operation: S1, S3 – 80%, or S6 – 80% ▸ Explosion-protected motors protection type Ex tb, Ex tc, Ex ec, Ex d ▸ Variable frequency drives: 3-phase mains input 100 – 1000V Maximum losses for acheiving class IE2 are specified in the standard
Exceptions	▸ Motors not designed for continuous load operation ▸ Switchable pole motors ▸ Synchronous motors ▸ TENV (IC 410) motors, other cooling types e.g. TEAO are not exempt ▸ Explosion-protected motors protection type Ex eb “increased safety motors” ▸ Motors completely integrated into a product and whose energy performance cannot be tested independently from the product, even with the provision of a temporary end-shield and drive-end bearing ▸ Motors with an integrated VFD whose energy performance cannot be tested independently from the VFD ▸ Motors with an integrated brake which forms an integral part of the inner motor construction and can neither be removed nor powered by a separate power source during the testing of the motor efficiency ▸ Motors designed for ambient temperatures < -30° C or > +60° C ▸ Motors designed for altitudes > 4,000 m ▸ Submersible motors designed to operate when fully submerged in a liquid ▸ Liquid-cooled motors with inlet temperature <0°C >32°C ▸ Motors with brushes, commutators, slip rings or other electrical connections to the rotor ▸ Motors placed on the market before July 1, 2029 as substitutes for identical motors integrated in products placed on the market before July 1, 2022, and specifically marketed as such “Substitute motors” ▸ Note — The option of IE2 + VFD is no longer applicable!

Send Quote Requests to info@automatedpt.com
Call +1(800)985-6929 To Order or Order Online At Nordgearmotors.com

Send Quote Requests to info@automatedpt.com
Call +1(800)985-6929 To Order or Order Online At Nordgearmotors.com

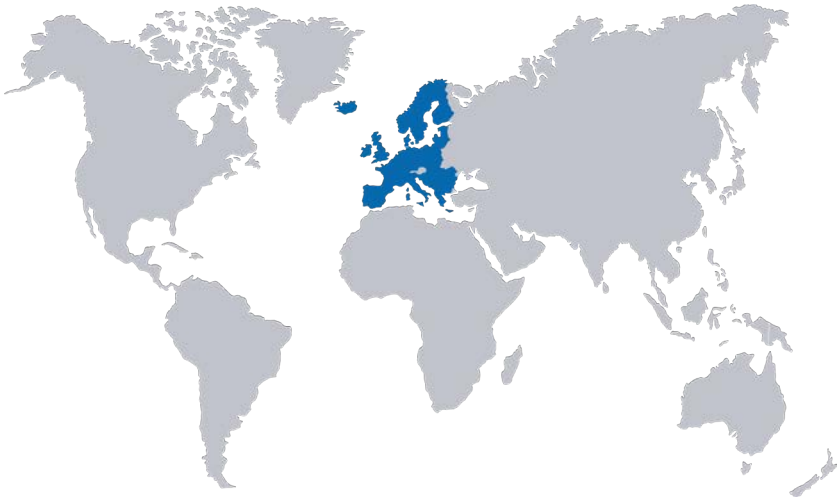

Required Efficiency Labeling	CE mark, IE class and efficiency level must appear on nameplate

Future	From 01 July 2023, the following energy efficiency classes will apply:
	▸ IE2 for single-phase motors
	  ▸ Rated output power ≥ 0.12 kW
	▸ IE2 for Explosion-protected motors (three-phase induction motors)
	  ▸ Rated output power 0.12 kW – 1000 kW
	  ▸ Ex eb — increased safety motors
	▸ IE4 for three-phase induction motors
	  ▸ Rated output power 75 kW – 200 kW
	  ▸ 2, 4, or 6 pole motors
	  ▸ Exceptions: brake motors, Ex eb increased safety motors, or other explosion-protected motors

Send Quote Requests to info@automatedpt.com
Call +1(800)985-6929 To Order or Order Online At Nordgearmotors.com

Send Quote Requests to info@automatedpt.com Call +1(800)985-6929 To Order or Order Online At Nordgearmotors.com

Global Standards and Directives

Australia / New Zealand

Efficiency Standard	AS/NZS 1359.5 : 2004
Efficiency Regulations	GEMS Act of 2018
Minimum Efficiency Level	High Efficiency IE2 (MEPS levels have aligned with IEC 60034 levels)
Applicable to	▸ 0.73 – 185 kW ▸ 2, 4, 6, 8 pole ▸ Up to 1100V ▸ 50Hz (AC) line power
Exceptions	▸ Motors designed for VFD operation (which cannot be connected directly) ▸ Motors labeled for intermittent operation ▸ 2-speed motors ▸ Single phase motors ▸ Submersible motors ▸ Motors completely integrated in a machine when the motor share common parts with the driven unit (e.g. shaft, housing, etc.) ▸ A motor that is supplied exclusively to third parties who will incorporate the motors into equipment that will be exported to a country other than Australia or New Zealand ▸ Torque motors
Required Efficiency Labeling	▸ The efficiency label must be stated on the nameplate ▸ Motor must be listed under http://reg.energyrating.gov.au/comparator/product_types

Send Quote Requests to info@automatedpt.com
Call +1(800)985-6929 To Order or Order Online At Nordgearmotors.com

China

Efficiency Standard	GB 18613-2020
Efficiency Regulations	GB 18613-2020
Minimum Efficiency Level	Grade 3 (IE3) GB 18613-2020 standard defines efficiency classes as Grades where Grade 3 is equivalent to IE3
Applicable to	▸ 3-phase motors 0.12 – 1,000 kW ▸ Single phase motors from 10.0 kW – 370.0 kW ▸ 2, 4, 6, 8 pole ▸ Up to 1000V ▸ 50Hz (AC) line power ▸ S1 and S3 – 80% ▸ TEFC (IC411) ▸ Explosion protected motors
Exceptions	▸ Motors that can only be operated with a frequency inverter ▸ Motors with integrated VFDs when the motor cannot be tested separately from the VFD ▸ Motors completely integrated in a machine when the motor share common parts with the driven unit (e.g. shaft, housing, etc.) ▸ Cooling methods like TEAO (IC418), TENV (IC410), TEFV (IC416), etc. ▸ Motors designed for ambient temperatures < -15° C or > +40° C ▸ Motors designed for altitudes > 1,000 m ▸ Submersible motors ▸ Smoke extraction motors with a temperature class higher than 250° C ▸ Water cooled motors ▸ Multi-speed motors
Required Efficiency Labeling	▸ CCC marking for 2-pole motors ≤ 2.2 kW, 4 pole motors ≤ 1.1 kW, 6 pole motors ≤ 0.74 kW, and 8 pole motors ≤ 0.55 kW Note: CCC is also necessary for Hong Kong ▸ The efficiency must be stated on the nameplate ▸ China energy labeling according to efficiency ▸ Motors from 0.75 – 375 kW must bear the IE3 and the China Energy Label, smaller / bigger motors only need the IE3 mark

Send Quote Requests to info@automatedpt.com
Call +1(800)985-6929 To Order or Order Online At Nordgearmotors.com

Send Quote Requests to info@automatedpt.com Call +1(800)985-6929 To Order or Order Online At Nordgearmotors.com

Global Standards and Directives

Brazil

Efficiency Standard	INMETRO NBR 17094-1
Efficiency Regulations	Lei No 10.295 Decreto No 4.508 Portaria Interministerial Nº 1, DE 29 DE JUNHO DE 2017
Minimum Efficiency Level	Alto Rendimento Plus (IE3)
Applicable to	▸ 0.12 – 370 kW ▸ 2, 4, 6, 8 pole ▸ Up to 1000V ▸ 50 and 60Hz (AC) line power
Exceptions	▸ Brake motors ▸ Motors labelled for intermittent operation (S2 – S10), switch-on duration < 80 % ▸ 2-speed motors ▸ Single phase motors ▸ Motors designed for VFD operation (which cannot be connected directly) ▸ Unventilated motors (TENV, TEAO) ▸ Submersible motors ▸ Explosion protected motors
Required Efficiency Labeling	

Send Quote Requests to info@automatedpt.com
Call +1(800)985-6929 To Order or Order Online At Nordgearmotors.com

South Korea

Efficiency Standard	KS C IEC 60034
Efficiency Regulations	MKE-2015-28
Minimum Efficiency Level	IE3
Applicable to	▸ 0.75 – 375 kW ▸ 2, 4, 6, 8 pole ▸ Up to 600V ▸ 60Hz (AC) line power ▸ Motors for continuous operation, even if combined with a VFD
Exceptions	▸ Operating mode other than S1 ▸ Motors specially designed for operation with VFDs ▸ Motors completely immersed in liquid during operation ▸ Unventilated motors (TENV, TEAO) ▸ Switchable pole motors ▸ Torque curve: version C and D ▸ Water-cooled motors similar to TEAO
Required Efficiency Labeling	

Send Quote Requests to info@automatedpt.com
Call +1(800)985-6929 To Order or Order Online At Nordgearmotors.com

Motor Ordering Guide

	Frame ❶	Size ❷	Poles ❹	Mounting ❸	Motor Options ❺	Brake Size ❻	Brake Options ❼
SK							
OR	Part Number						

Size & Frame Combinations ❶ ❷

Frame	Size			
63	S	L	-	-
71	S	-	-	-
71	L	-	-	-
80	S	-	-	-
80	L	LP	-	-
90	S	SP	-	-
100	L	LP	LA	AP
112	M	MP	-	-
132	S	SP	-	-
132	M	MP	-	-
160	S	SP	-	-
160	M	MP	-	-
160	L	LP	-	-
180	MX	-	-	-
180	LX	-	-	-
180	MP	-	-	-
180	LP	-	-	-
225	RP	-	-	-
225	SP	MP	-	-
250	WP	-	-	-

Available Mounting Combinations ❸

NEMA Foot		NEMA C-face		IEC B3	IEC B5	IEC B14			
-	-	56C	-	-	A140	C90	C105	C120	-
56	-	56C	-	B3-71S	A160	C105	C120	C140	-
56	-	56C	-	B3-71L	A160	C105	C120	C140	-
56	-	56C	-	B3-80S	A200	C120	C140	C160	-
56	143T	56C	143TC	B3-80L	A200	C120	C140	C160	-
145T	-	145TC	-	B3-90S	A200	C120	C140	C160	-
182T	-	182TC	-	B3-100L	A250	C120	C140	C160	C200
184T	-	184TC	-	B3-112M	A250	C140	C160	C200	-
213T	-	213TC	-	B3-132S	A300	C160	C200	-	-
215T	-	215TC	-	B3-132M	A300	C160	C200	-	-
-	-	254TC	-	B3-160S	A300	C200	-	-	-
-	-	256TC	-	B3-160M	A300	C200	-	-	-
-	-	256TC	-	B3-160L	A300	C200	-	-	-
-	-	284TC	-	-	A300	C200	-	-	-
-	-	286TC	-	-	A350	C200	-	-	-
-	-	284TC	-	B3-180M	A350	-	-	-	-
-	-	286TC	-	B3-180L	A350	-	-	-	-
-	-	-	-	-	-	-	-	-	-
-	-	-	-	B3-225	A450	-	-	-	-
-	-	-	-	-	-	-	-	-	-

Poles ❹

Poles	60Hz [rpm]	50Hz [rpm]
4	1800	1500
4-2	1800/3600	1500/3000
8-2	900/3600	750/3000
Other		

Duty
- ○ Continuous S1
- ○ Time Rated S2 [min]
- ○ Intermittent S3 [%]

Enclosure
- ○ IP55
- ○ IP66

Country of Use
_____

Power
_____ [hp/kW]

Efficiency Class
- ○ Premium Efficient (PE/IE3) (P)

Standards
- ○ North American [CUS]
- ○ International [IEC]
- ○ Other: _____

Electrical Design
- ○ 3-Phase
- ○ Single Phase - ECR (60Hz)

Hazardous Location
- ○ None
- ○ Class 1 Div 2 - Gas
- ○ Class 2 Div 2 - Dust
- ○ Global - ATEX

Paint Options*
- ○ Unpainted Aluminum Alloy
- ○ Basic
- ○ NSD2
- ○ NSD3
- ○ NSDC3
- ○ NSDF3
- ○ NSD4
- ○ NSD5
- ○ Other _____

* See pg 35 for more options

Motor Options ❺

Electrical Motor Options
- ○ TW - Thermostat
- ○ TF - Thermistor
- ○ SH - Space Heater (select voltage)
  - ○ 110 Volt ○ 230 Volt ○ 460 Volt

AC Drive Related Motor Options
- ○ F - Blower Fan (200-575V 1 & 3 Phase)
- ○ FC - Blower Cooling Fan (115V, 1 Phase)
- ○ IG__ - Incremental Encoder
- ○ IG__P - Incremental Encoder with Plug
  IG & IG__P Options:
  Logic: ○ TTL ○ HTL ○ Push-pull
  Supply: ○ 4-6V ○ 10-30V ○ 5-30V
  PPR: ○ 1024 ○ 2048 ○ 4096
- ○ AG - Absolute Encoder
  AG Options: Turns _____ Step _____
  AG Bus System: _____
- ○ MG - Magnetic Encoder PPR: ○ 1 ○ 32 ○ 256

Environmental Motor Options
- ○ RD - Canopy Drip Cover
- ○ RDD - Double Fan Cover
- ○ KB - Condensation Drain Holes (plugged)
- ○ KBO - Condensation Drain Holes (open)
- ○ IP66 - IP66 Enclosure Protection
- ○ KKV - Terminal Box Sealed with Resin
- ○ AICM - Additional Insulation
- ○ EP - Epoxy Dipped Windings

Additional Motor Options
- ○ OL - Totally Enclosed Non-Ventilated (TENV)
- ○ OL/H - (TENV) Without Fan Cover
- ○ WE - Second Shaft Extension (Fan Side)
- ○ HR - Hand Wheel
- ○ Z - High Inertia Cast Iron Fan
- ○ RLS - Motor Backstop (rotation viewing fan)
  - ○ Clockwise ○ Counter-Clockwise
- ○ EKK - Small Terminal Box
- ○ MS - Quick Power Plug Connector

Brake Options ❼
- ○ HL - Hand Release Lever
- ○ FHL - Locking Hand Release Lever
- ○ HLH - Hand Release Lever with Hole
- ○ RG - Corrosion Protected Brake
- ○ SR - Dust & Corrosion Protected Brake
- ○ ADJ_____Nm - Brake Torque Adjustment
- ○ BIP66 - IP66 Brake Enclosure
- ○ MIK - Micro-switch
- ○ BSH - Brake Heating/Bifilar Coil
- ○ NRB1 - Quiet Brake Release
- ○ NRB2 - Quiet Brakemotor Operation
- ○ G...P - High Performance Rectifier (See Rectifier Selection Below)
- ○ G...V - Sealed Rectifier (See Rectifier Selection Below)
- ○ IR - Current Sensing Relay

Brake Size ❻
- ○ BRE 5
- ○ BRE 10
- ○ BRE 20
- ○ BRE 40
- ○ BRE 60
- ○ BRE 100
- ○ BRE 150
- ○ BRE 250
- ○ BRE 400
- ○ BRE 800

Rectifier Selection

Rectifier Wiring
- ○ Across the line (from terminal box)
- ○ Separate power source (AC vector drive) (Soft starter)

Brake Supply Voltage
- ○ 24 VDC
- ○ 115 VAC
- ○ 208 VAC
- ○ 230 VAC
- ○ 400 VAC
- ○ 460 VAC
- ○ 575 VAC
- ○ Other ____

Braking Method*
- ○ Method 10
- ○ Method 15
- ○ Method 20
- ○ Method 25
- ○ Method 30
- ○ Method 35
- ○ Method 40
- ○ Method 45
- ○ Method 50
- ○ Method 55

* More info on page 63

Voltage & Frequency

Single Speed Motors
- ○ 230/460V-60Hz
- ○ 208/360V-60Hz
- ○ 575V-60Hz
- ○ 400V-50Hz
- ○ Other _____

Two Speed Motors
- ○ 460V-60Hz
- ○ 230V-60Hz
- ○ 575V-60Hz
- ○ 400V-50Hz
- ○ Other _____

Terminal Box Position
- ○ TB1
- ○ TB2
- ○ TB3
- ○ TB4

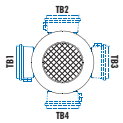

Mtg. Pos. M1 Shown

Conduit Entry Location
- ○ CE I *
- ○ CE II
- ○ CE III *
- ○ CE IV

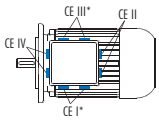

*Brakemotor

Mtg. Pos. M1 Shown

Hand Release Position
- ○ HL1
- ○ HL2
- ○ HL3
- ○ HL4

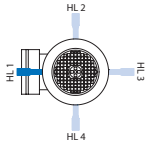

Send Quote Requests to info@automatedpt.com
Call +1(800)985-6929 To Order or Order Online At Nordgearmotors.com

Engineering Data

STANDARD DESIGN AND CONSTRUCTION 16
INVERTER/VECTOR DUTY OPERATION 24
HAZARDOUS LOCATION MOTORS 28
MOUNTING POSITIONS 29
CONNECTION DIAGRAMS 30

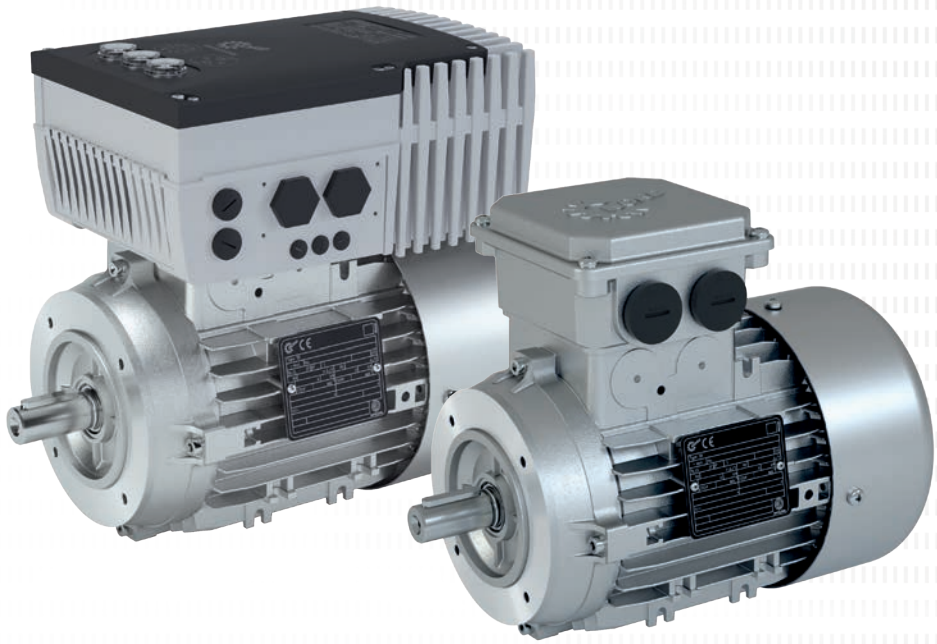

Send Quote Requests to info@automatedpt.com
Call +1(800)985-6929 To Order or Order Online At Nordgearmotors.com

Send Quote Requests to info@automatedpt.com Call +1(800)985-6929 To Order or Order Online At Nordgearmotors.com

Standard Design and Construction

Standard Motor Construction

Our motors are an important part of our ability to provide a high quality, competitive, and complete drive system. NORD motors are designed for across the line or VFD/vector duty operation. NORD motors are constructed with superior insulating methods to provide excellent moisture protection, low temperature rise, and voltage spike resistance in accordance with NEMA MG 1. Low rotor inertia and high starting torque allow peak performance in difficult applications involving high start/stop cycling rates or rapid acceleration/deceleration. Standard motors offer protection from the elements with many standard and optional design features.

Standard design benefits include:

- Shaft lip seals on both ends of the motor shafts
- Stator to endbell connections sealed to exclude moisture
- Double coated magnetic wire insulation
- VFD/vector duty insulation system conforms to NEMA MG 1, section 31.4 voltage spikes
- Moisture resistant varnish dipped windings with improved varnish materials
- Inorganic insulating components for tropical protection
- Conduit box sealed with gaskets
- Corrosion resistant alloy materials
- Threaded cable entry holes

Asynchronous Low Voltage Motors (230V YY)

The motors listed in this catalog are low voltage asynchronous motors that can be used as gear motors or stand-alone motors. NORD manufactures motors in the power range from 0.16 to 30 hp. Information about motors with powers greater than 30 hp, as well as special motors such as explosion-protected motors, submersible motors, or encapsulated motors, can be supplied by request.

Non-Sparking Fan

The standard NORD motor fan is a non-sparking design that also provides proper airflow in either direction of rotation.

Terminal Block

Each NORD motor uses a terminal block, a superior method of wire termination when compared to pigtail leads. A terminal block ensures long-term reliability of the power connections.

Send Quote Requests to info@automatedpt.com
Call +1(800)985-6929 To Order or Order Online At Nordgearmotors.com

Insulation System

The NORD motor insulation system is designed to provide a superior degree of protection. NORD utilizes the following insulation components:

- Magnet wire – double coated insulation
- Varnish dip impregnation
- Slot liners
- Phase paper & separators
- Top sticks
- Wire sleeve connectors

Tropical Protection (Anti-Fungal)

As a standard, the NORD motor insulation system is tropically protected. The insulating and construction components are made of inorganic materials that resist fungal growth.

High Starting Torque

NORD motors produce a higher starting torque than what is required by NEMA standards. This is achieved through improved motor winding, rotor design, and construction.

Service Factor

NORD standard motors that are rated 230/460V-60Hz and 332/575V-60Hz have a service factor of 1.15. All other motors have a service factor of 1.0 or as noted in the motor rating tables beginning on page 87.

Poles / Speeds

NORD offers a variety of single and two speed motors in addition to the standard 4 pole motor. NORD single speed motors are inverter/vector duty rated, however, it is not recommended to run a NORD two speed motor with an AC vector drive.

	Number of Poles	Synchronous Speed at 60Hz	Synchronous Speed at 50Hz
Single Speed Motors	4	1800 rpm	1500 rpm
	2	3600 rpm	3000 rpm
	6	1200 rpm	1000 rpm
Two Speed Motors	4-2 single winding	1800 / 3600 rpm	1500 / 3000 rpm
	8-2 dual winding	900 / 3600 rpm	750 / 3000 rpm

Other speeds available upon request.

Send Quote Requests to info@automatedpt.com
Call +1(800)985-6929 To Order or Order Online At Nordgearmotors.com

Standard Design and Construction

Maximum Motor Speeds

NORD motor rotors are balanced to a minimum of 3600 rpm or 120Hz and have a standard maximum operation speed per the table below.

Frame Size	Maximum Speed [rpm]
63	2500
71	2500
80	2860
90	3400
100	3500
112	3500
132	3300
160	3200
180	3100
200	3000
225	3000

Note

When maximum speeds higher than those listed above are required, Fluoro elastomer (FKM) sealing rings are necessary on both the drive end and non drive end. All details relate to S1 operating mode (continuous operation). For short periods, the motors are able to deliver higher speeds without the need for modification.

Voltage and Frequency

NORD motors are available in a number of voltage and frequency options with all standard voltages readily available. Optional voltages or voltage/frequency combinations may be possible, please consult NORD with your requirements.

		50Hz Motors			60Hz Motors		
Poles	Efficiency	Motor Type	Power Range	Nominal Voltage	Motor Type	Power Range	Nominal Voltage
4	Standard (IE1)	63 S/4 – 100 L/4	0.12 – 2.2 kW 0.16 – 3.0 hp	230/400 V Δ/Y	63 S/4 – 200 LX/4	0.16 – 40.0 hp	230/460 V YY/Y
		100 LA/4 – 200 LX/4	3.0 – 30.0 kW 4.0 – 40.0 hp	400/690 V Δ/Y			332/575 V Δ/Y
	Premium Efficient (IE3)	63 SP/4 – 100 LP/4	0.12 – 2.2 kW 0.16 – 3.0 hp	230/400 V Δ/Y	63 SP/4 – 180 LP/4	0.16 – 30.0 hp	230/460 V YY/Y
		100 AP/4 – 250 WP/4	3.0 – 55.0 kW 4.0 – 75.0 hp	400/690 V Δ/Y			332/575 V Δ/Y
					225 RP/4 – 250 WP/4	40.0 – 75.0 hp	460 V Δ
							575 V Δ

Send Quote Requests to info@automatedpt.com
Call +1(800)985-6929 To Order or Order Online At Nordgearmotors.com

Voltage and Frequency Variation

Voltage and frequency variations are based upon the assumption that the nameplate horsepower will not be exceeded and that the motor temperature may increase. Standard allowable deviations are based upon the type of motor labeling.

NEMA and CSA Labeled Motors

Variations are based upon the nominal utilization voltage and not the service (supply) voltage as per ANSI C84.1. Voltage and frequency tolerances follow the guidelines set forth in NEMA MG 1.

Service Voltage	Utilization Voltage	Voltage Variation	Frequency Variation	Voltage / Frequency Variation
120V	115V	+/- 10%	+/- 5%	+/- 5%
208V	200V			
240V	230V			
480V	460V			
600V	575V			

50Hz CE Labeled Motors

Standard NORD motors are designed in accordance with IEC 60034-1 and display the rated voltage on the motor nameplate. Alternatively, the allowable voltage range may be displayed on the motor nameplate. Allowable voltage and frequency variations are as specified in the table below:

Motor Voltage	Voltage Tolerance	Allowable Voltage Range	Frequency Variation
230/400V	+/- 10%	220 – 240 / 380 – 420V	+/- 2%
400/690V	+/- 10%	380 – 420 / 660 – 725V	+/- 2%

Voltage Harmonization

Voltage harmonization was introduced to the European Union in 1983 as part of IEC 60038 (formerly IEC 38). From 1995–2008 a transition period allowed motors to be labeled with the "harmonized voltage" however, a reduced allowable voltage tolerance was permitted by the IEC 60038 standard as displayed in the table below:

Previous Motor Voltage	Harmonized Motor Voltage	Voltage Tolerance
220/380V	230/400V	+6 / -10%
240/415V	230/400V	+10 / -6%
380/660V	400/690V	+6 / -10%

US and Canadian Standard (CUS)

CUS motor construction defines that NORD motors are constructed in accordance to UL 1004 (electric motors) and CSA C22.2 No. 100-04 (motors and generators) guidelines. This option is standard for 208, 230, 460, and 575V operation at 60Hz.

Motors nameplated with CUS will be marked and indicating that the Underwriters Laboratories and CSA have tested and approved the motors according to both US and Canadian standards.

Send Quote Requests to info@automatedpt.com
Call +1(800)985-6929 To Order or Order Online At Nordgearmotors.com

Standard Design and Construction

Permissible Radial and Axial Forces for IEC / NEMA Motors

The listed values apply for a calculated bearing life of:

L_h = 20,000 hours, for 4-pole motors with 60Hz operation
F_R = Permissible radial force at $F_A = 0$
F_A = Permissible axial force at $F_R = 0$

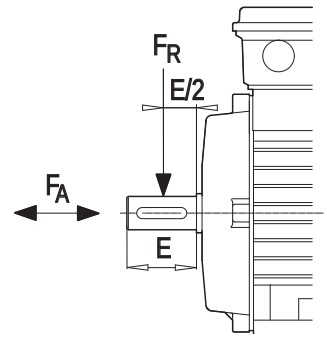

Permissible Radial and Axial Forces

Motor Size	F_R [N]	F_A [N]	F_R [lb]	F_A [lb]
63	530	480	120	110
71	530	480	120	110
80	860	760	195	170
90	910	810	205	180
100	1300	1100	290	245
112	1950	1640	440	370
132	2790	2360	625	530
160	3500	3000	785	675
180.X	3500	3000	785	675
180	5500	4000	1235	900
200.X	5500	4000	1235	900
225	8000	5000	1800	1235
250	8000	5500	1800	1235

Note

These values do not apply for the 2nd shaft extension. Please Inquire for the transmissible power and radial force. Motors that are mounted directly onto a housing are subjected to the radial and axial forces from the 1st gear stage and in some cases may have reinforced bearings.

Insulation Class

NORD motors are constructed with a thermal class F insulating system and designed for class B temperature rise up to 80°C. The use of class F insulation with a class B temperature rise provides increased operating life. Motors constructed with class H insulation are also available as an option.

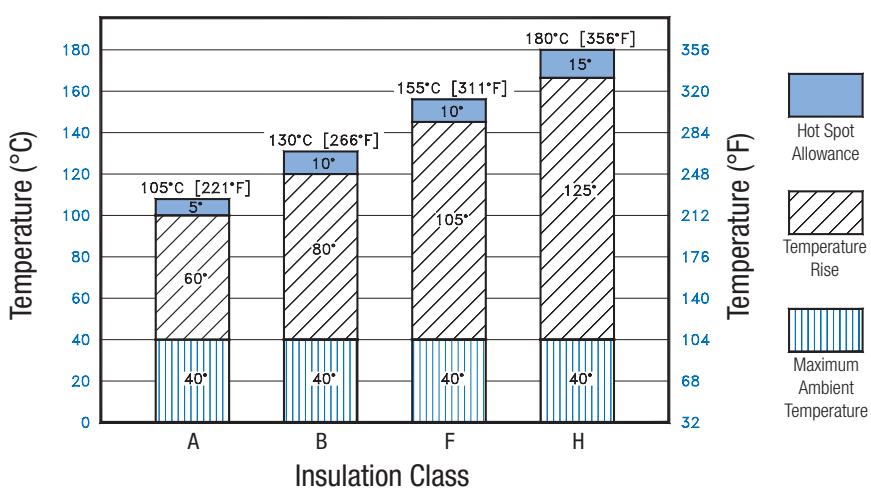

Ambient Temperature

NORD motors are designed to operate with a maximum ambient temperature of 40°C (104°F). If the motor's operating environment exceeds 40°C, an upgraded insulation is required or the motor's nominal power (P_n) needs to be de-rated.

Motor rated power = [P_n x de-rate factor]

Ambient Temperature		De-rate Factor
°F	°C	
113	45	0.96
122	50	0.92
131	55	0.87
140	60	0.82

Elevation

NORD motors are designed to operate at an elevation of up to 3300 ft (1000 m) above sea level. At higher elevations the air is thinner - resulting in less cooling capacity. If the motor's installation elevation exceeds 3300 ft (1000 m), upgraded insulation systems should be considered or the motor's nominal power (P_n) needs to be de-rated.

Motor rated power = [P_n x de-rate factor]

Altitude		De-rate Factor
ft	m	
5000	1500	0.97
6500	2000	0.94
8200	2500	0.90
10000	3000	0.86
11500	3500	0.83
13000	4000	0.80

Enclosure

Standard NORD motors are provided with a Totally Enclosed Fan-Cooled (TEFC) design with an IP55 enclosure rating. Other enclosures are available including Totally Enclosed Non-Ventilated (TENV), Totally Enclosed Blower Cooled (TEBC), and IP66.

The motor integral cooling fan provides proper air flow in either direction of rotation. The IEC cooling classification is IC 411 according to IEC 60034-6.

	1st Digit Foreign Body Protection		2nd Digit Water Protection
0	No protection	0	No protection
1	Protected against solid objects 50 mm (2 in) in diameter and larger	1	Protected against dripping water
2	Protected against solid objects 12 mm (0.5 in) in diameter and larger	2	Protected against dripping water up to a 15° angle
3	Protected against solid objects 2.5 mm (0.1 in) in diameter and larger	3	Protection against sprayed water
4	Protected against solid objects 1 mm (0.04 in) in diameter and larger	4	Protection against splashed water
5	Protected against dust	5	Protection against water jets
6	Dust tight	6	Protection against high pressure water jets
7	--	7	Protection against intermittent submersion in water
8	--	8	Protection against continuous submersion in water

Send Quote Requests to info@automatedpt.com
Call +1(800)985-6929 To Order or Order Online At Nordgearmotors.com

Standard Design and Construction

Sound Pressure Level and Sound Power Level

In accordance with DIN EN ISO 3745/44 the sound pressure level L_{PA} is measured in an anechoic chamber with the test sample idling. The measurement surface area A [dB] is calculated from the geometrical dimensions of the test sample. The sound power level L_{WA} is determined by adding the measurement surface area to the sound pressure level. For VFD operation, a slightly increased noise level due to magnetic humming or whistling is to be expected. At higher speeds and frequencies above 50Hz or 60Hz, the fan noise increases. External fans are supplied directly from the mains - their cooling effect and noise emission do not depend on the motor speed.

Measurement surface sound pressure level and sound power level for mains operation of 4-pole motors

Tolerance ± 3 [dB(A)]			IC411 / TEFC self-cooled				IC416 / TEBC with external fan			
			50Hz 1500/min		60Hz 1800/min		50Hz		60Hz	
Motor Type			L_{PA}	L_{WA}	L_{PA}	L_{WA}	L_{PA}	L_{WA}	L_{PA}	L_{WA}
IE1	IE2	IE3	[dB(A)]				[dB(A)]			
63 S/L	-	63 SP/LP	40	52	44	56	47	59	50	62
71 S/L	-	71 SP/LP	45	57	49	57	51	63	53	65
80 S 80 L	80 SH 80 LH	- 80 LP	47	59	51	63	56	68	59	71
90 S 90 L	90 SH 90 LH	90 SP 90 LP	49	61	53	65	61	73	65	77
100 L 100 LA	100 LH 100 AH	100 LP 100 AP	51	64	55	68	59	72	63	76
112 M	112 MH	112 MP	54	66	58	70	61	74	64	77
132 S - -	132 SH 132 MH 132 LH	- 132 MP -	60	73	64	77	57	70	60	73
- 160 M 160 L	160 SH 160 MH 160 LH	160 SP 160 MP 160 LP	66	79	70	83	60	73	64	77
180 MX 180 LX	- -	- -	66	79	70	83	60	73	64	77
- -	180 MH 180 LH	180 MP 180 LP	62	75	66	79	60	73	64	77
200 LX	200 XH	-	62	75	66	79	60	73	64	77
-	-	225 RP	on request							
-	225 SH	225 SP								
-	225 MH	225 MP								
-	250 WH	250 WP								

Send Quote Requests to info@automatedpt.com
Call +1(800)985-6929 To Order or Order Online At Nordgearmotors.com

Duty Classes

The following duty types are defined in IEC 60034-1.

Duty Type	Explanation
S1	Continuous operation at a constant load, the motor reaches thermal equilibrium.
S2	Short-time operation at a constant load for a given time followed by a time of rest until the motor is completely cooled down to ambient temperature. **Example:** S2–10 minutes **Recommended values for determination:** 10, 30 min.
S3	Sequential intermittent operation, identical run and rest cycles with a constant load. Temperature equilibrium is never reached. Starting current has little effect on temperature rise. The cyclic duration factor (cdf) indicates the portion of operation time in relation to a complete duty cycle. The typical duty cycle time is 10 minutes unless otherwise specified. **Example:** S3–40% **Recommended values for determination:** 25, 40, 60%
S6	Continuous operation with intermittent load sequential, identical cycles of running with constant load and running with no load. No rest periods. **Example:** S6–40% **Recommended values for determination:** 25, 40, 60%

Power Increasing Factor for Short-term and Intermittent Operation

Motor ratings in this catalog are based on continuous duty operation (S1). If a motor is designed for S1 duty but is to be operated for short-time or intermittent operation, it can be subjected to higher loads. The available motor power can be raised above the motor rated power by the “increasing factor” in the table below.

Motor rated power = [P_n x increasing factor]

Duty Type			Increasing Factor
S2	Operating time	10 min	1.40
		30 min	1.15
S3	Cyclic duration factor (cdf)	25%	1.33
		40%	1.18
		60%	1.08
S6	Cyclic duration factor (cdf)	25%	1.45
		40%	1.35
		60%	1.15

Send Quote Requests to info@automatedpt.com
Call +1(800)985-6929 To Order or Order Online At Nordgearmotors.com

Inverter / Vector Duty Operation

Inverter / Vector Duty

NORD single speed motors are Inverter/Vector Duty. The construction of the NORD motor insulating system takes into account the non-sinusoidal waveforms produced by variable frequency drives. NORD uses high grade insulating components and extra first turn protection as well as double coated wire to ensure long service life when connected to inverters. NORD motors can produce full torque at zero speed if properly sized, selected, and controlled.

Inverter / Vector Duty – Voltage Spikes

All NORD motors up to 500V are constructed with an insulating system designed to withstand the repeated voltage spikes generated by modern variable frequency drives. The insulation system is in conformance with NEMA MG 1 Section 31.4.4.2 Voltage Spikes, which requires motors to withstand:

$V_{peak} = 3.1 \times V_{rated}$ with a rise time $\geq 0.1\mu s$

The use of dv/dt or sinusoidal filters is necessary for motors with inverter operation above 500V.

Constant Torque Speed Range

NORD motors are capable of a very wide speed range at constant torque. Selection of the motor must take into account the motor thermal cooling ability and its torque producing capacity. For most fan cooled motors, operation at low frequencies is limited by the motor fan's ability to provide cooling air. Operation at speeds above base frequencies is restricted by torque capacity and by the voltage limit of the VFD. Consult the graphs "Totally Enclosed Fan Cooled Motors - TEFC" and "Totally Enclosed Blower Cooled Motors - TEBC" on the following pages.

Maximum Motor Speed and Frequency

NORD 4-pole motors are designed for operation up to 3600 rpm with a maximum line frequency of 120Hz.

Zero Speed Operation

Operation of a NORD motor at zero speed is possible depending on the VFD control method and the motor cooling characteristics. To produce torque at zero speed, the motor must be sized sufficiently for adequate cooling (consult the graphs "Totally Enclosed Fan Cooled Motors - TEFC" and "Totally Enclosed Blower Cooled Motors - TEBC". The VFD or vector controller must also be capable of producing torque at zero motor speed. This typically requires closed loop control with an encoder (NORD option IG) or other feedback device. Consult the AC drive manufacturer for details.

Thermal Protection

It is good practice to use motor thermal protection on motors used with variable frequency drives or vector controllers. NORD offers thermostats (option TW) and thermistors (option TF) to provide motor thermal protection.

High Dynamic Operation

NORD motors are designed to deliver extremely high dynamic performance with modern variable frequency drives. A key design element is a low mass moment of inertia design that allows for higher cycling capacity, lower operating temperature, and more motor torque delivered to the load in dynamic applications.

Send Quote Requests to info@automatedpt.com
Call +1(800)985-6929 To Order or Order Online At Nordgearmotors.com

Motor Speed and Torque

When operating a motor with a VFD, the motor output speed is essentially proportional to the supply frequency. If the supply frequency is increased, the motor speed will also increase. If the supply frequency is decreased, the motor speed will also decrease.

Induction motors are constant slip devices — causing the proportional relationship between output speed and input frequency to vary slightly.

Most applications for gearmotors and VFDs require constant torque. This means that the required torque is constant and independent of output speed. The following chart demonstrates the frequency range in which NORD motors can produce constant torque and constant power. The chart does not take into account any thermal limits of the motor at low frequencies.

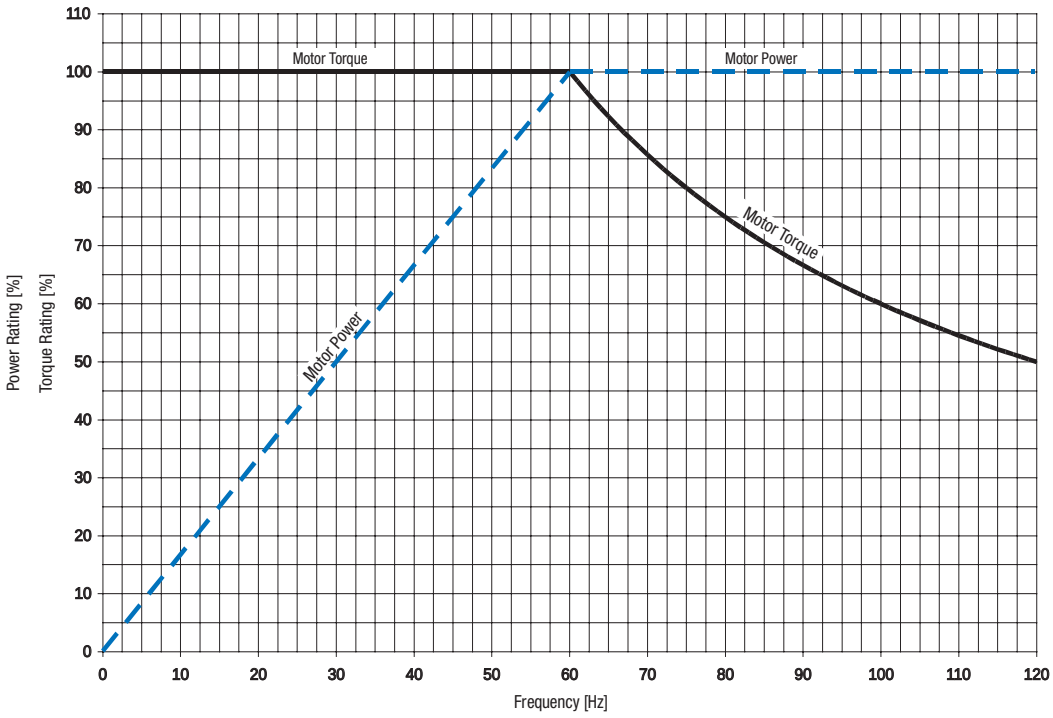

Output speed based on variable frequency:

$$\text{Output Speed } (n_{Hz}) = \frac{1800 \text{ rpm} \times f_{Hz}}{60\text{Hz}} - \text{Slip}_{rpm}$$

Power below 60Hz base speed (the power above base speed is constant at the rated power):

$$hp_{Hz} = P_{rated} \times \frac{f_{Hz}}{60\text{Hz}}$$

The output torque capacity of the motor can be calculated from the speed and power:

$$T_{Hz} = \frac{hp_{Hz} \times 63025}{n_{Hz}}$$

Inverter / Vector Duty Operation

Totally Enclosed Fan Cooled Motor - TEFC (Premium Efficient) 60hz

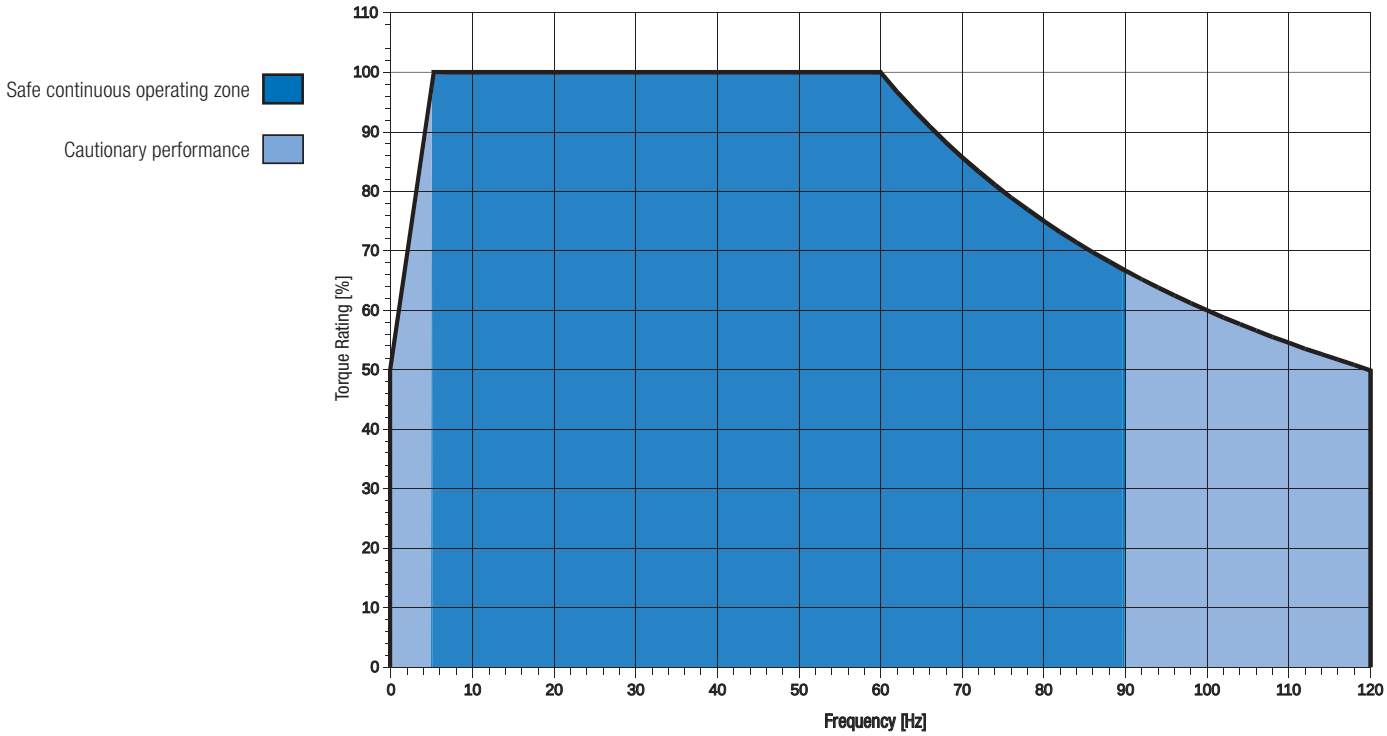

NORD motors can safely operate over a frequency range of 0Hz to 120Hz.

Below 5Hz, many AC VFDs or vector drives provide poor speed regulation and the AC drive manufacturer should be contacted for recommendations. These performance limits are not due to the NORD motor but the control method of the AC drive.

Above 90Hz, a motor's overload capacity is limited due to the limited voltage generated by the AC drive. When a motor is operated above 60Hz, the overload capacity is reduced as a square function of the increased frequency. Typically above 90Hz, the overload capacity is reduced to below 150%, causing a problem for some applications.

Below 6Hz, the motors provide reduced torque capabilities than compared to their 60Hz rating due to reduced cooling by the motor fan at lower speeds. If constant torque is required down to zero speed, NORD can provide optional separately powered motor cooling fans (TEBC operation). See the next page for the performance characteristic.

Send Quote Requests to info@automatedpt.com
Call +1(800)985-6929 To Order or Order Online At Nordgearmotors.com

Totally Enclosed Blower Cooled Motor - TEBC

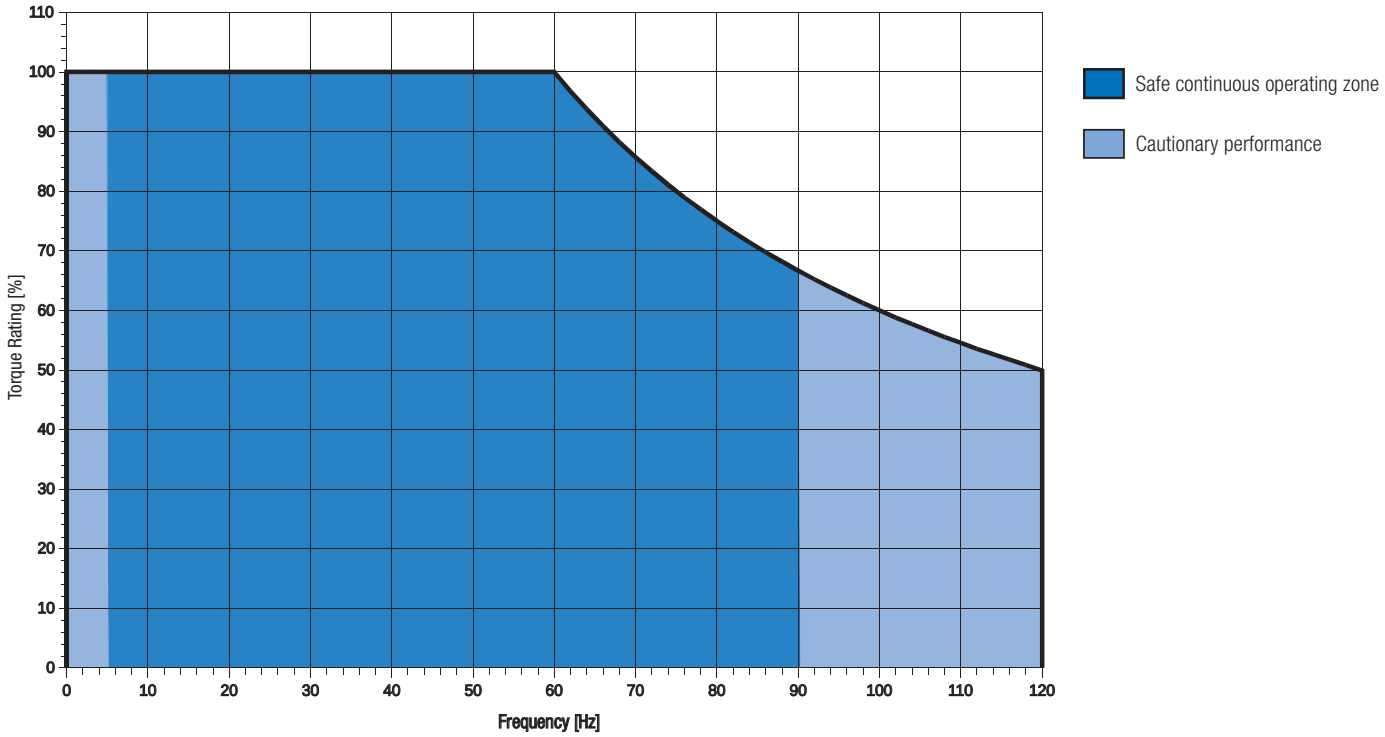

NORD motors can safely operate over a frequency range of 0Hz to 120Hz.

Below 5Hz, many AC VFDs or vector drives provide poor speed regulation and the AC drive manufacturer should be contacted for recommendations. These performance limits are not due to the NORD motor but the control method of the AC drive.

Above 90Hz, a motor's overload capacity is limited due to the limited voltage generated by the AC drive. When a motor is operated above 60Hz, the overload capacity is reduced as a square function of the increased frequency. Typically above 90Hz, the overload capacity is reduced to below 150%, causing a problem for some applications.

Send Quote Requests to info@automatedpt.com
Call +1(800)985-6929 To Order or Order Online At Nordgearmotors.com

Hazardous Location Motors North America

Class I

Class I — Gas Groups A, B, C, and D

- Gases, vapors, or aerosols
- NEC 500 / (CEC 18-000J for Canada up to 2015)
- Division 1
  Areas in which hazardous concentrations of flammable gases or vapors
  - Can be present under normal operating conditions
  - Can frequently occur during repair and maintenance work
  - Can occur throughout malfunctions concerning operation during which errors occurring in electrical equipment may result in a source of ignition
- Division 2
  Areas in which hazardous concentrations of flammable gases or vapors are kept in closed containers or systems and can only be released under fault conditions

Class II

Class II — Dust Groups E, F, and G

- Dusts
- NEC 500 / (CEC 18-000J for Canada up to 2015)
- Division 1
  Areas in which hazardous concentration of explosive dust atmospheres
  - Can be present under normal operating conditions
  - Can occur throughout malfunctions concerning operation during which errors occurring in electrical equipment may result in a source of ignition
  - Areas with hazardous quantities of conductive dust (Group E)
- Division 2
  Areas in which hazardous concentrations of explosive dust atmospheres can only be released under fault conditions

Class III

Class III

- Ignitable fibers and flyings
- NEC 500 / (CEC 18-000J for Canada up to 2015)
- Division 1
  Areas in which flammable fibers and lint occur or are processed
- Division 2
  Areas in which flammable fibres are stored or handled in a different manner to that in the production process

Note

NORD is able to build select CSA approved hazardous location motors up to 30 hp for Class I, Division 2, Groups A, B, C, D and for Class II, Division 2, Groups F, G.
Temperature Code: T3B (165°C)
Class I, Division 2 motors not inverter capable.

Send Quote Requests to info@automatedpt.com
Call +1(800)985-6929 To Order or Order Online At Nordgearmotors.com

Mounting Positions

Mounting Positions

The motor mounting position helps to determine the use of specific options as well as specify the terminal box location and the conduit entry location. If a drip cover is not used for shaft-up or shaft-down applications, drip-proof motors must be mounted in the horizontal or sidewall position to meet enclosure definitions. Consult NORD if considering any mounting positions that are not shown as catalog standard options.

Footed Motors

Mounting Positions

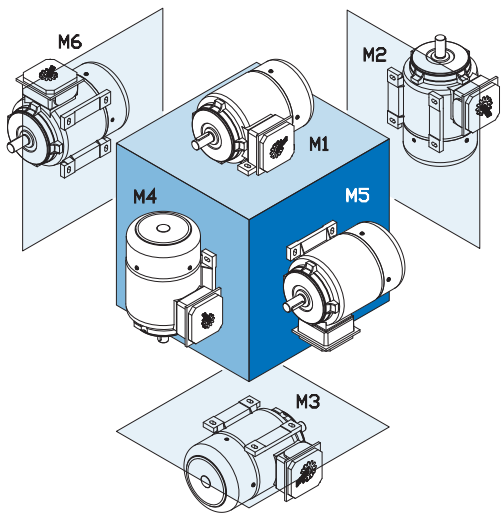

Terminal Block & Conduit Entry

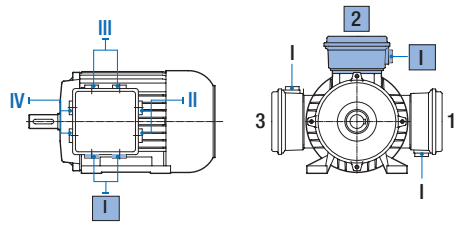

Hand Lever Positions

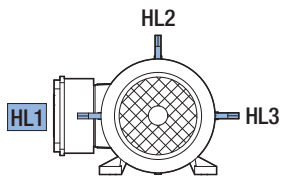

Flanged Motors

Mounting Positions

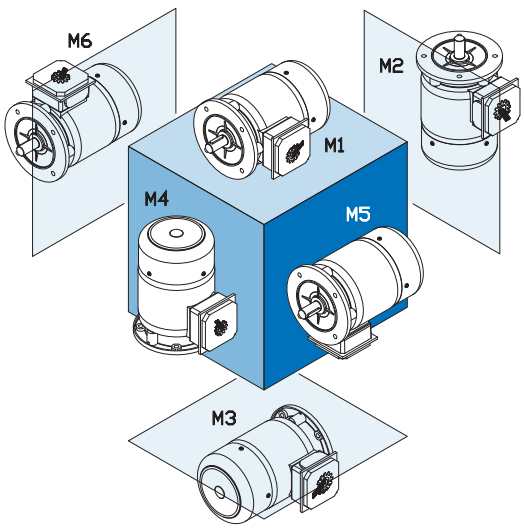

Terminal Block & Conduit Entry

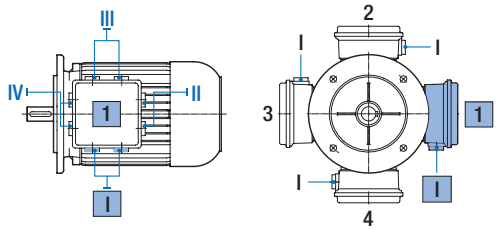

Hand Lever Positions

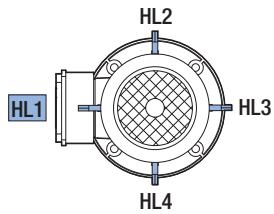

Send Quote Requests to info@automatedpt.com
Call +1(800)985-6929 To Order or Order Online At Nordgearmotors.com

Connection Diagrams

NORD Frames 63-225
230 / 460V, 60Hz, 3Ø | 200 / 400V, 50Hz, 3Ø

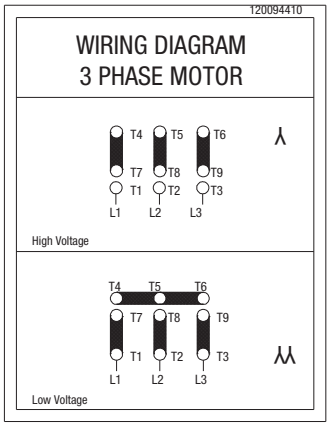

NORD Frames 63-225
460D, 60Hz, 3Ø | 230 / 400V, 50Hz, 3Ø
208 / 360V, 60Hz, 3Ø | 400 / 690V, 50Hz, 3Ø
332 / 575V, 60Hz, 3Ø

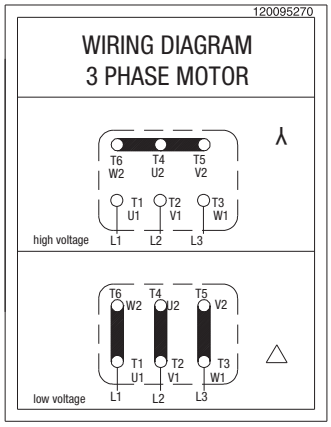

NORD 2 - SPEED MOTORS
SINGLE WINDING (4-2 & 8-4 POLE)

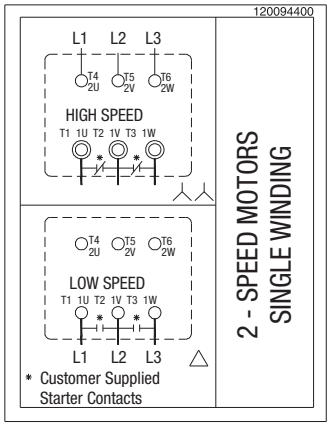

NORD 2 - SPEED MOTORS
DUAL WINDING (8-2 POLE)

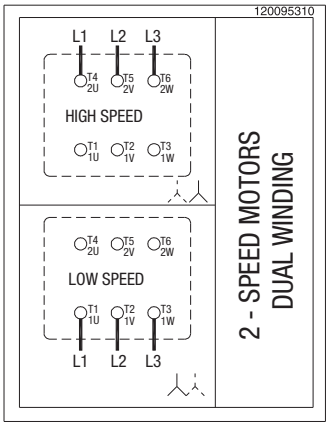

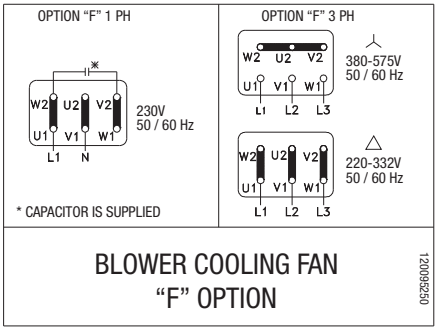

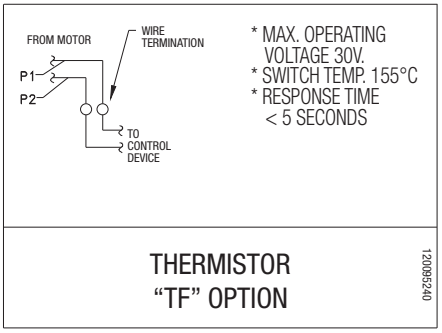

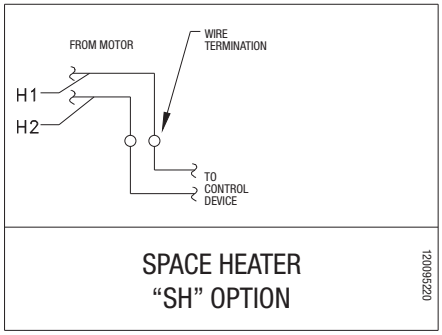

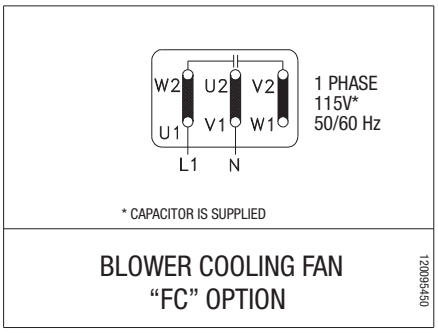

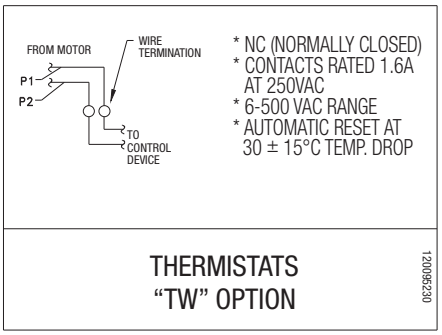

Send Quote Requests to info@automatedpt.com
Call +1(800)985-6929 To Order or Order Online At Nordgearmotors.com

Motor Frame Sizes 63-90
115 / 230, 60Hz, 1Ø

SINGLE PHASE MOTOR WITH STANDARD RELAY
ECR - NEMA 115/230V

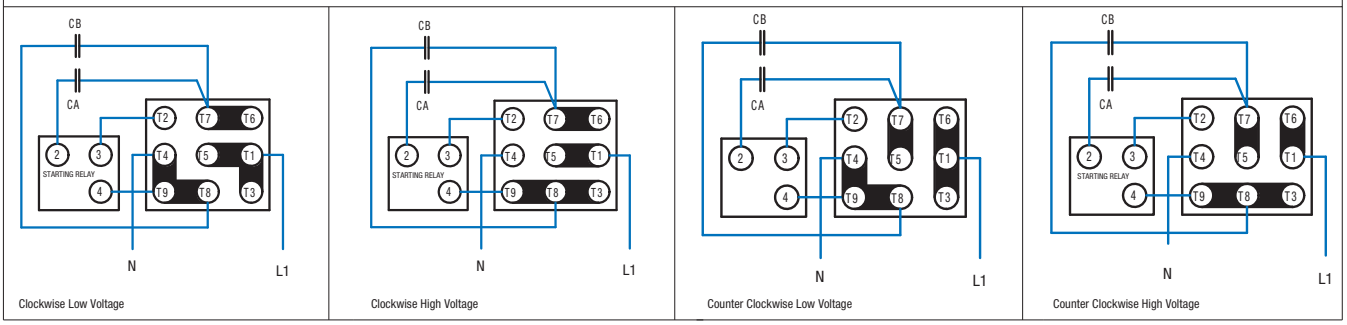

Motor Frame Sizes 63-90
115 / 230, 60Hz, 1Ø

08506980

SINGLE PHASE MOTOR WITH SINPAC RELAY
ECR - NEMA 115/230V

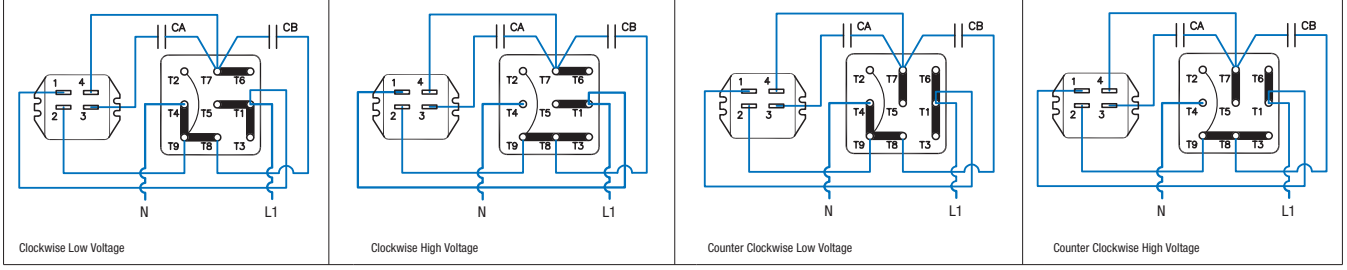

Send Quote Requests to info@automatedpt.com
Call +1(800)985-6929 To Order or Order Online At Nordgearmotors.com

Send Quote Requests to info@automatedpt.com Call +1(800)985-6929 To Order or Order Online At Nordgearmotors.com

Notes

Send Quote Requests to info@automatedpt.com
Call +1(800)985-6929 To Order or Order Online At Nordgearmotors.com

Send Quote Requests to info@automatedpt.com
Call +1(800)985-6929 To Order or Order Online At Nordgearmotors.com

Motor Options

MOTOR OPTIONS 34
SURFACE PROTECTION 35
THERMAL OPTIONS 36
SINGLE PHASE MOTORS 37
COOLER FANS 41
MOTOR CONNECTION OPTIONS 43
ENCODER OPTIONS 45

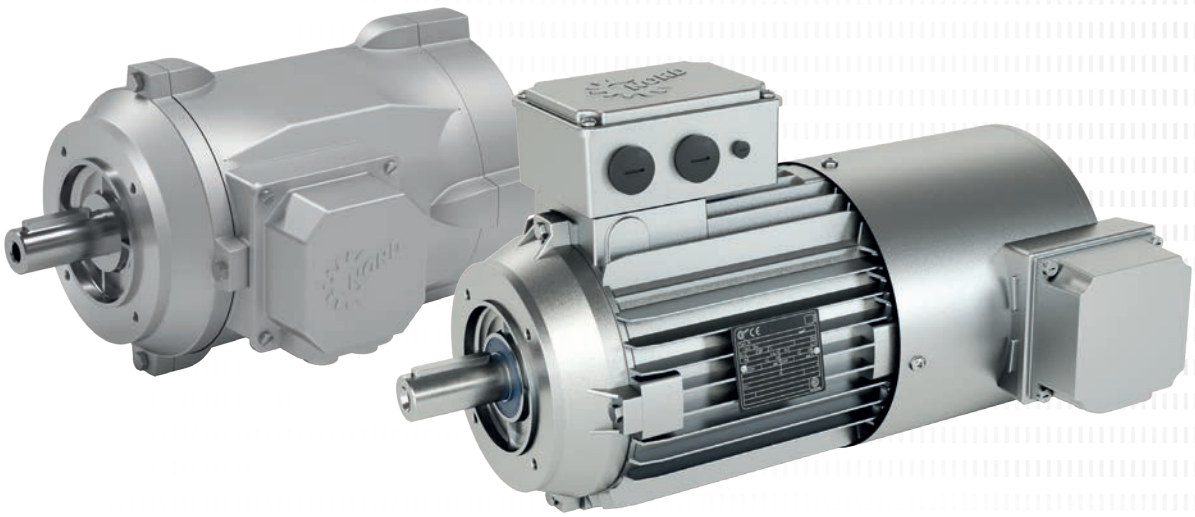

Send Quote Requests to info@automatedpt.com
Call +1(800)985-6929 To Order or Order Online At Nordgearmotors.com

Motor Options

Motor Options and Construction

NORD motors are either assembled from component parts or stocked as complete motors ready to be assembled to a gear unit or shipped as a stand alone motor. The "Modify" next to a motor option designates that the option can be added to a complete motor by simple modification. The "Build" next to a motor option indicates that the motor will need to be built from component parts in order to incorporate the motor option.

Abbreviation	Description	Modify	Build	Page
AG	Absolute encoder		●	49
AICM	Additional Insulation		●	38
ECR	Single phase motor, 60Hz		●	37
EKK	Small terminal box	●		40
EP	Epoxy dipped windings		●	38
F	Blower cooling fan	●		41
FC	Blower cooling fan [115V]	●		41
HR	Hand wheel		●	39
IG...P	Incremental encoder		●	47
KB	Condensation drain holes - plugged		●	38
KBO	Condensation drain holes - open		●	38
KKV	Terminal box sealed with resin		●	38
MG	Magnetic encoder		●	45
MS	Quick power plug connector	●		43
OL	Totally enclosed non-ventilated	●		39
OL/H	Totally enclosed non-ventilated without fan cover		●	39
RD	Canopy drip cover	●		39
RDD	Double fan cover	●		39
RLS	Motor backstop		●	40
RS	Round motor power connectors		●	44
SH	Space heater		●	37
TF	Thermistor		●	37
TW	Thermostat		●	36
WE	2nd shaft extension on fan side		●	39
Z	High inertia cast iron fan		●	40
-	IP66 enclosure protection	●		38
-	Paint coatings	●		35
-	Pre-fabricated motor power cable	●		44

Send Quote Requests to info@automatedpt.com
Call +1(800)985-6929 To Order or Order Online At Nordgearmotors.com

Painting

Coating / Field of Application	Class *	Structure
Basic Indoor installation: Unheated buildings where condensation may occur (warehouses, etc...)	C2	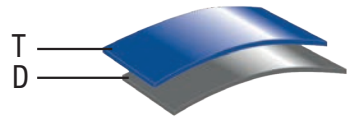
NORD Severe Duty 2 (NSD2) Indoor installation: Unheated buildings where condensation may occur (warehouses, etc...) Outdoor installation: Atmosphere with low pollution level, mostly rural areas	C2	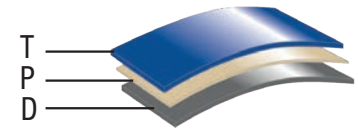
NORD Severe Duty 3 (NSD3) Indoor installation: Production rooms with high humidity and increased levels of air pollution, e.g. laundries, breweries, dairies Outdoor installation: Urban and industrial atmosphere with moderate sulfur dioxide pollution and/or coastal atmosphere with low salinity	C3	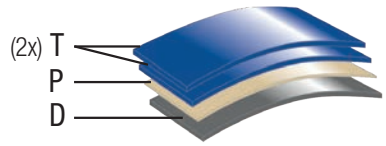
NORD Severe Chem Duty 3 (NSDC3) Indoor installation: Production rooms with high humidity and increased levels of chemical air pollution	C3	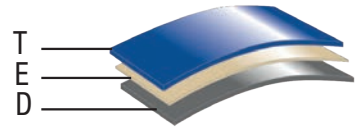
NORD Severe Food Duty 3 (NSDF3) Indoor installation: Production rooms with high humidity and increased levels of air pollution, e.g. food packaging	C3	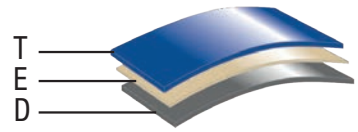
NORD Severe Duty 4 (NSD4) Indoor installation: Chemial plants, swimming pools, offshore shipyards, and boat harbors Outdoor installation: Industrial or coastal atmosphere with moderate salinity	C4	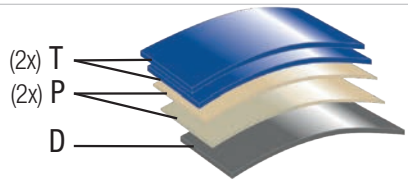
NORD Severe Duty 5 (NSD5) Indoor installation: Buildings or areas with near-permanent condensation and high levels of pollution Outdoor installation: Industrial areas with high humidity, aggressive environments, or coastal atmosphere with high salinity	C5	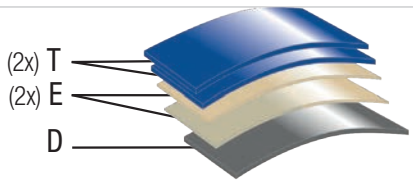

T	2-Component Polyurethane Top Coat	P	2-Component Polyurethane Primer
E	2-Component EP Zinc Phosphate Primer	D	Single Component Dip Primer (for cast-iron units only)

** Comparable to DIN EN ISO 12944-2 classification of ambient conditions*
Protocol of the coating thickness based on ISO 19840 available on request.

Send Quote Requests to info@automatedpt.com
Call +1(800)985-6929 To Order or Order Online At Nordgearmotors.com

Motor Options

Motor Overload Protection

Selecting appropriate motor protection is a key factor in reliable motor operation. There are two common classes of motor protection — current based and temperature based.

Electrical installation codes require at least two types of protection in the motor circuit, both of which are normally current based. First is short-circuit protection that is accomplished by fuses or circuit breakers. The second is motor overload protection and is typically a device called a “motor overload” or a “heater.”

NORD can provide two different types of motor temperature based protection — a PTC thermistor (TF) or a bi-metallic thermostat (TW). In many situations, temperature based protection is often the more effective motor protection.

	Fuses	Motor Overloads	PTC Thermistor [TF]	Thermostat [TW / 2TW]
Over current up to 200%	❍	●	●	●
High inertia starting	❍	◐	●	◐
Frequent motor starts	❍	◐	●	●
Stalling	◐	◐	◐	◐
Single phasing	❍	◐	●	●
Supply voltage deviations	❍	●	●	●
Supply frequency deviations	❍	●	●	●
Inadequate motor coolling	❍	❍	●	●
Bearing damage	❍	❍	●	●

● Good protection
◐ Limited protection
❍ No protection

Thermostats (TW & 2TW)

Build

Motor thermostats, or bi-metallic switches, can be wired directly into the control circuit without a separate control module or tripping device. Thermostats operate on a relatively high control voltage so they are less sensitive to voltage interference from the main power supply. Thermostat leads and motor power leads can be ran next to each other when using the appropriate shielded cable. The installer is responsible for wiring the thermostats onto the motor control circuit. The leads may be labeled in a variety of ways as indicated.

Thermostat standard connection	Series connected, one per phase
Contact	NC (Normally Closed) / Auto re-setting
Response temperature (Option TW)	311°F (155°C) Shut-off device
Response temperature (Option 2TW)	311°F (155°C) Shut-off device + 266°F (130°C) alarm device
Nominal current	1.6 amp at 250 V
Resistance	< 50 mΩ
Switch rebound	< 1ms
Insulation rating	2000 VAC
Cycles	10,000 max
Lead identification (inside terminal box)	P1 and P2 or TB1 and TB2 / 2TB1 and 2TB2

Send Quote Requests to info@automatedpt.com
Call +1(800)985-6929 To Order or Order Online At Nordgearmotors.com

Thermistors (TF)

Build

With a separate control module or tripping device (ex. Kirwan INT69), thermistors are used to sense overload and temperature conditions by converting the critical operating temperature limit into internal resistance changes. Many variable frequency drives are available to accept thermistors without requiring the seperate contol module. Due to their small size, heat sink construction, and high change in resistance value, minor resistance variations caused by relatively long lead runs may be tolerated. This feature also allows for one controller to be used for several temperature sensing locations. Many VFDs come with on-board thermistor inputs. NORD does not supply the thermistor control module.

Thermistor standard connection	Three devices, series connected, one per phase
Type	Positive temperature coefficient (PTC)
Transition temperature	150°C ± 5 °C
Resistance	20… 500Ω (below transition) or > 4 kΩ (above transition)
Reed current	< 1mA
Max voltage	30V
Lead identification (inside terminal box)	P1 and P2 or TP1 and TP2

Thermostats and thermistors will automatically reset. All wiring must be completed by qualified personal and adhere to all local installation codes.

Warning!

Space Heater (SH)

Build

Anti-condensation space heaters heat up motor windings to prevent moisture from forming inside the motor. Space heaters are recommended in case of severe temperature fluctuations, high humidity, or extreme climatic conditions. The required voltage must be stated when ordering.

Available versions: 115V, 230V, 460V

Space heaters must not be switched on while the motor is running.

Single Phase Motors, 60Hz (ECR)

Build

ECR single phase motors are intended for demanding operation on a 60Hz power supply. The permissible voltage is 115V +/-10% or 230V+/-10%. ECR motors contain both a run-capacitor as well as an additional start-capacitor that is switched off after start-up. They are suitable for applications that demand higher starting torque and generally have a 1.35 SF if operated within the allowable voltage range.

Send Quote Requests to info@automatedpt.com
Call +1(800)985-6929 To Order or Order Online At Nordgearmotors.com

Motor Options

Condensation Drain Holes — Build

Condensation drain holes are placed in the motor endbells at the lowest possible point and allow for accumlated condensation to drain. The motor drain holes can be provided by NORD either open (KBO) or sealed with a closing plug (KB).

The motor must be installed in the mounting orientation specified on the nameplate or the drain holes will not function properly and may result with the motor filling with water.

Condensation Drain Holes, Plugged (KB) — Build

KB drain holes are plugged for shipment. The plugs must be removed before commissioning in order for the holes to effectively drain moisture.

Condensation Drain Holes, Open (KBO) — Build

KBO drain holes are shipped open (not plugged).

IP66 Enclosure Protection — Modify

IP66 protection includes all features of IP65 enclosure protection and is suitable for wet, high-pressure wash down, and extremely dusty environments.

Terminal Box Sealed with Resin (KKV) — Build

Terminal boxes may be sealed with a flexible, electrically safe resin to ensure that contaminants, water, and moisture cannot pass through the terminal box into the stator body. This option is helpful in extremely dusty, wet, and humid environments as well as installations that frequently have large temperature swings where condensation may form.

For extreme wet environments, the terminal box can be fully filled with resin. In these instances, the motor must be supplied with a quick disconnect plug pre-wired for the proper voltage.

Additional Insulation (AICM) — Build

NORD offers additional insulation inside the motor for greater electrical protection in extremely wet or corrosive environments. An electrically safe insulating material is applied internally to the stator windings and the rotor body.

Epoxy Dipped Windings (EP) — Build

In extremely wet environments, the motor windings are dipped in epoxy for improved moisture protection. The motor can also be treated with a variety of protective coatings including NSD2 or above for an even higher degree of protection.

Send Quote Requests to info@automatedpt.com
Call +1(800)985-6929 To Order or Order Online At Nordgearmotors.com

Canopy Drip Cover (RD) Modify

NORD offers a canopy drip cover for wet or dirty installations where the fan end of the motor is mounted up. This blocks falling water or debris and forces it to repel from the motor's fan guard.

Double Fan Cover (RDD) Modify

For wet or dirty installations where the fan end of the motor is mounted up, the NORD double fan cover provides protection from falling / wind blown water, snow, dirt, or debris entering the back of the motor.

Totally Enclosed Non-Ventilated (OL) Modify

TENV motors provide benefits in operating environments such as those with extreme dust or dirt and where cooling fans may accumulate material that can be detrimental to the motor and application. The motors can also be used to reduce cooling fan noise on a standard motor. TENV motors feature the standard fan cooled motor design, including the fan cover, but are provided without the fan.

A TENV motor requires either a larger motor frame size or a reduced power rating applied to the standard frame. A standard motor frame size can operate as a TENV motor at full rated power provided that the duty cycle is intermittant at 50% ED or less.

Totally Enclosed Non-Ventilated, Without Fan Cover (OL/H) Build

The OL/H series of TENV motors are more compact in space than the OL series. They do not include the rotor shaft extension through the back bearing end bell or the fan cover.

2nd Shaft Extension on Fan Side (WE) Build

NORD offers a second shaft extension on the fan side of the motor that protrudes through the fan cover. This extension can be used as a power take-off or to mount customer supplied devices such as encoders and tachometers. The shaft extension can be provided on motors with and without brakes. The shaft extension can not be used on motors with blower fans (F) or (FC).

Hand Wheel (HR) Build

Motors can be supplied with a hand wheel that is located on the second shaft extension. The hand wheel can be used for manual operation during power outages or for machine positioning setup. This option is offered on metric WE shafts only.

The user is required to provide appropriate safety guarding for the rotating hand wheel.

Send Quote Requests to info@automatedpt.com
Call +1(800)985-6929 To Order or Order Online At Nordgearmotors.com

Motor Options

Small Terminal Box (EKK) Modify

The motor terminal box can be provided as a smaller, one-piece terminal box design. This option is valid for standard motors 0.16 – 10.0 hp (frame size 63 – 132).

⚠ When supplied with a brakemotor, the brake rectifier must be located outside of the terminal box.

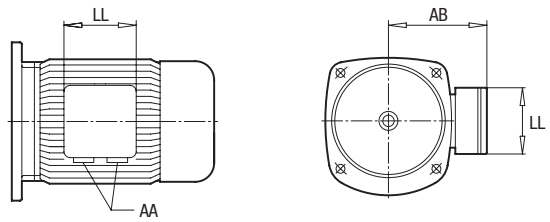

Motor Size	LL [in]	AB [in]	AA [mm]	AA [NPT]
63	2.95	3.94	M16 x 1.5	1/2" NPT
71	2.95	4.29	M16 x 1.5	1/2" NPT
80	2.95	4.88	M20 x 1.5	1/2" NPT
90	3.62	5.08	M20 x 1.5	1/2" NPT
100	3.62	5.51	M20 x 1.5	1/2" NPT
112	3.62	5.91	M20 x 1.5	1/2" NPT
132	4.09	6.85	M25 x 1.5	3/4" NPT

High Inertia Cast Iron Fan (Z) Build

An optional cast iron motor cooling fan is available for use as a mechanical soft start and/or soft stop and to add inertia to the motor. These fans can also be used for a flywheel effect to store mechanical energy and smooth rapid load changes. Cast iron fans replace the standard nylon motor fan. The motor length is the same as a brakemotor.

Motor Size	Fan Inertia J_Z [lb-ft²]
63	0.0221
71	0.0475
80	0.114
90	0.238
100	0.268
112	0.565
132	0.950

Motor Backstop (RLS) Build

Back stops are used to prevent backward rotation from the load when the motor is switched off. A drive with a back stop can only run in one direction and the required direction must be stated when ordering.

⚠ Caution for motors with more than 4 poles and FI operation. It is essential to observe the lift-off speed. The back stop only operates without wear above the lift-off speed.

Motor Size	Backstop Torque [lb-in]	Minimum Speed [rpm]	Motor Extension x_{RLS} [in]
80	1150	860	2.52
90	1150	860	2.95
100	1150	860	3.58
112	3270	750	3.66
132	3270	750	4.21
160	7880	670	5.31
180.X	7880	670	5.31
180	9120	630	5.0
200	9120	630	5.0
225	9120	630	7.09
250.W	31,862	400	7.09

See brake motors section for the motor length.

CW = Clockwise — Direction of rotation in the clockwise direction, right-hand running

CCW = Counter-clockwise — Direction of rotation in the counter-clockwise direction, left-hand running

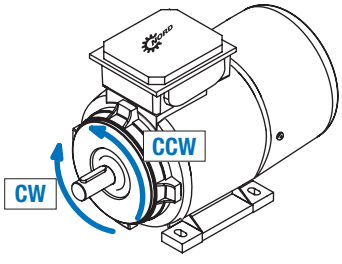

Blower Cooling Fan (F, FC)

Typical applications for external fans are drives which are controlled by VFDs that are operated over a long period at low motor speeds and full nominal torque. External fans are also frequently used for applications in cyclic operation with high switching frequency (S4 mode).

The version is standard with

- ISO class F (24 VDC special version ISO class E)
- Protection class IP66
- CE + cURus approval

External fans on NORD motors are universally suited for 50Hz and 60Hz operation in single phase and three-phase networks. All external fans have a separate terminal box and are available in special design with a HARTING plug connector.

External fans cool the motor regardless of the speed and with appropriate switching, can also function even when the motor is switched off.

The external fan must be connected separately from the main motor and the main motor should be protected against failure of the external fan by using thermistors (TF).

The external fans are as follows according to the motor sizes:

- Size 63 – 112 2-pole
- Size 132 – 250 4-pole

Standard Circuit for External Fans:

- Single phase operation / Steinmetz circuit
  for motor sizes 63 – 90 (230V standard) and motor size 63 – 112 (115V FC version)
- Three-phase operation △- or Y- Circuit
  for motor sizes 100 – 250

Standard F Version: External fan for 50Hz and 60Hz operation

50Hz		Single Phase Operation				Three-Phase Operation					
		U_N [V]	I_{max} [mA]	P_{max} [W]	n_N [r/min]	U_N△ [V]	I_{max}△ [mA]	U_NY [V]	I_{max}Y [mA]	P_{max} [W]	n_N [r/min]
Motor Size	63	230 – 277	180	46	2710	200 – 303	150	346 – 525	90	28	2830
	71	230 – 277	180	48	2730	200 – 303	150	346 – 525	90	29	2820
	80	230 – 277	190	48	2650	200 – 303	160	346 – 525	90	33	2760
	90	220 – 277	290	59	2890	200 – 303	390	346 – 525	220	78	2890
	100	220 – 277	290	62	2820	200 – 303	370	346 – 525	210	80	2830
	112	220 – 277	270	64	2750	200 – 303	350	346 – 525	200	87	2780
	132	230 – 277	330	48	1460	200 – 303	420	346 – 525	240	67	1450
	160	230 – 277	340	59	1400	200 – 303	430	346 – 525	250	84	1420
	180	230 – 277	340	59	1400	200 – 303	430	346 – 525	250	84	1420
	200	220 – 277	340	59	1400	200 – 303	430	346 – 525	250	84	1420
	225	—	—	—	—	200 – 400	910	346 – 525	310	238	1410
	250	—	—	—	—	200 – 400	910	346 – 525	310	238	1410

60Hz		Single Phase Operation				Three-Phase Operation					
		U_N [V]	I_{max} [mA]	P_{max} [W]	n_N [r/min]	U_N△ [V]	I_{max}△ [mA]	U_NY [V]	I_{max}Y [mA]	P_{max} [W]	n_N [r/min]
Motor Size	63	230 – 277	210	54	3120	220 – 332	140	380 – 575	80	29	3420
	71	230 – 277	210	56	3100	220 – 332	130	380 – 575	70	28	3370
	80	230 – 277	220	59	2830	220 – 332	130	380 – 575	70	36	3250
	90	220 – 277	230	61	3440	220 – 332	320	380 – 575	180	71	3430
	100	220 – 277	280	73	3340	220 – 332	300	380 – 575	180	80	3390
	112	220 – 277	360	88	3170	220 – 332	290	380 – 575	170	93	3260
	132	230 – 277	230	53	1740	220 – 332	360	380 – 575	210	55	1730
	160	230 – 277	290	71	1680	220 – 332	370	380 – 575	210	86	1670
	180	230 – 277	290	71	1680	220 – 332	370	380 – 575	210	86	1670
	200	220 – 277	290	71	1680	220 – 332	370	380 – 575	210	86	1670
	225	—	—	—	—	220 – 400	620	380 – 575	340	247	1670
	250	—	—	—	—	220 – 400	620	380 – 575	340	247	1670

Send Quote Requests to info@automatedpt.com
Call +1(800)985-6929 To Order or Order Online At Nordgearmotors.com

Motor Options

FC Version: External fan for 115 V_{AC} operation

60Hz		Single Phase Operation U_N [V]	I_{max} [mA]	P_{max} [W]	n_N [r/min]
Motor Size	63	100 – 135	560	49	3540
	71	100 – 135	550	54	3530
	80	100 – 135	570	57	3500
	90	100 – 135	650	65	3440
	100	100 – 135	690	75	3450
	112	100 – 135	800	86	3170

FC Version: External fan for 24V_{DC} operation

DC		Direct Current (DC) Operation U_N [V]	I_{max} [mA]	P_{max} [W]	n_N [r/min]
Motor Size	63	24	300	7.2	2740
	71	24	440	10.5	2740
	80	24	520	12.5	2750
	90	24	790	19.0	2730
	100	24	1150	27.6	2730
	112	24	1620	38.8	2730

Type		lbs	Volume Flow, Minimal 50Hz V [m³/h]	60Hz V [m³/h]	DC V [m³/h]
2-pole	63	3.42	52	63	54
	71	3.52	76	91	78
	80	6.64	123	131	128
	90	4.85	216	258	216
	100	5.29	277	323	278
	112	5.73	351	406	355
4-pole	132	7.05	290	340	—
	160	10.36	513	620	—
	180	10.36	513	620	—
	200	10.36	513	620	—
	225	14.77	1062	1237	—
	250	14.77	1062	1237	—

Wiring Diagrams for Blower Cooling Fans (F, FC)

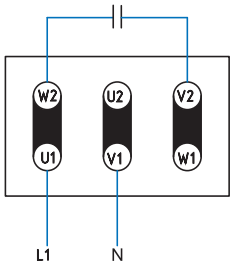

Single phase operation
Steinmetz circuit
230V – 277V 50 + 60Hz

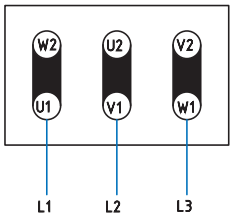

Three-phase operation
Delta circuit △
200V – 303V 50Hz
220V – 332V 60Hz

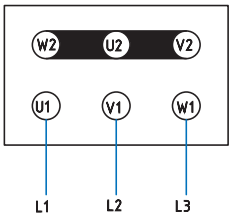

Three-phase operation
Star circuit Y
346V – 525V 50Hz
380V – 575V 60Hz

Quick Power Plug Connector (MS)

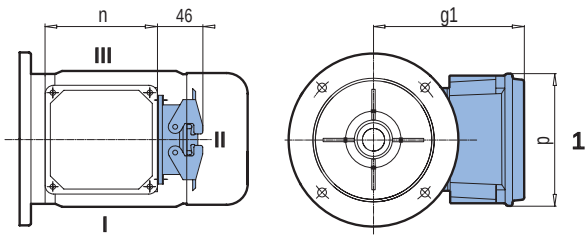

Motor Size	63	71	80	90	100	112	132
g1 / g1 Bre [in]	5.51	5.87	6.22	6.42	6.85	7.24	8.03 / 8.62
n [in]	4.49	4.49	4.49	4.49	4.49	4.49	4.80
p [in]	4.49	4.49	4.49	4.49	4.49	4.49	4.80

MS connectors are available on NORD three-phase motors and brake motors from frame size 63 – 132. After the first installation, the motor can be quickly changed by simply plugging and unplugging the electrical connections.

With frame sizes 63 – 112, a HAN 10 ES male connector is used on the motor side. On the customer side, a HAN 10 ES female connector is required (Harting). Above size 132, a male HAN C Modular is provided on the motor side. NORD also supplies a protective plastic cover on the connector to protect from dirt and damage prior to installation.

The power plug position must be specified when ordering. The standard configuration is shown in position II with the connector mounted on the side of the terminal box pointing toward the fan cowl. Plug connectors are also possible for positon I or III.

Technical data for sizes 63 – 112

Plug connectors:	HAN 10 ES/Han 10 ESS
Number of contacts:	10
Current:	16 A max.
Voltage:	600 V max. according to UL/CSA

Cage clamp spring release terminal connection

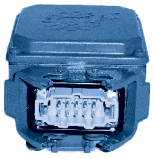

Technical data for sizes 132

Plug connectors:	HAN C-Modular
Number of contacts:	9
Current:	22 A max.
Voltage:	690 V max.

Crimp connection

Send Quote Requests to info@automatedpt.com
Call +1(800)985-6929 To Order or Order Online At Nordgearmotors.com

Motor Options

Round Motor Power Connector (RS)

Modify

NORD can provide a variety of motor power plug connectors that allow for a safe and quick connection/disconnection of the motor's main power supply. The following M23 plug options are stocked for NORD motors up to 5.0 hp and can be used with standard NORD AC motors and brake motors powered from the motor's terminal block. The M23 plug provides three pins for line power and one pin for ground at the motor connection.

Manufacturer	Turck	Turck
Type	RSF46-0.3M/M20	RSF44-0.3M/M25
Motor Interface	M20 x 1.5 male thread	M25 x 1.5 male thread
Customer Interface	7/8-16 UN male thread	7/8-16 UN male thread
Voltage Rating	600V	600V
Current Rating	10.0 A	15.0 A
Pin Out	4-Pin male	4-Pin male

RS Connector Compatibility

Motor Frame Size	Terminal Box Thread
63 – 71	M20
80 – 90	M25
100 – 112	M32

Connector Wiring

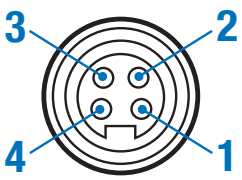

Motor Terminal Marking	Wire Color	Number
L1 (line power)	Black	1
L2 (line power)	Red	3
L3 (line power)	White	2
Ground	Green	4

Pre-Fabricated Motor Power Cable

Modify

NORD can provide Turck pre-fabricated motor power cables to mate with the M23 motor power plugs.

Pins	Wire Size	Current Rating	Voltage Rating	Length
4	14 AWG	15 A	600V	2 m
				5 m
				10 m
				Custom

Temperature rating: -40 to +105 ° C (-40 to +221 ° F)
Protection rating: Meets IEC IP67 and NEMA 1, 3, 4, and 6P

Send Quote Requests to info@automatedpt.com
Call +1(800)985-6929 To Order or Order Online At Nordgearmotors.com

Send Quote Requests to info@automatedpt.com
Call +1(800)985-6929 To Order or Order Online At Nordgearmotors.com

Magnetic Incremental Encoder (MG)

A flexible, reliable incremental encoder system is available for NORD motors with axis heights from 63 to 180. The system operates on the basis of a contactless magnetic measuring principle and does not require separate bearings. Because of this, it is extremely resistant to vibrations and is not sensitive to impacts which act on the drive unit.

Encoders are mounted on the B side of the motor using a threaded hole on the shaft while the evaluation sensor is mounted on the fan cowl. The alignment of the system tolerates +/- 1 mm in all three axes. Due to the special design of the magnetic system, use in the vicinity of electrical brakes is also possible.

The encoder provides two output channels (track A and B) which deliver pulse flanks staggered by 90°, effectively enabling detection of the rotational direction and quadrupling the number of pulses. The lowest resolution supplied by NORD is provided by an encoder with 1 pulse per revolution (1 ppr), delivering a “1” and then a “0” for each 180° of rotation of the motor shaft. This monitoring does not require a fast PLC or counter input.

Pulse time may fluctuate slightly as the absolute accuracy is typically 200 ppr.

Technical Data	Value Range	
Standard resolutions	1 ppr, 32 ppr, 256 ppr (Pulses/revolution)	
Output signals (Track A and B)	HTL push-pull level / max. 40 mA / short-circuit protected	
Supply voltage and current consumption without load	10 – 30 VDC / < 30 mA	
Technical EMC and ESD resistance	EN 55022: Class B (30–1000 MHz) EN 61000-4-2: Kontakt 4 kV/Luft 8 kV EN 61000-4-3: 30 V/m	EN 61000-4-4, EN 61000-4-5: 1 kV EN 61000-4-6: 10 Vemk EN 61000-4-8: 30 A/m
Temperature range	-20 to 80°C	
Speed range	0 – 5000 min^{-1}	
Protection class	IP68	
Length of connection cable and sheath cross section	1000 mm / Ø4.9 mm	
Number and cross-section of conductors	4x Ø0.34 mm^2 (AWG22)	
Changes of motor dimensions	Max. 20 mm longer	

Send Quote Requests to info@automatedpt.com
Call +1(800)985-6929 To Order or Order Online At Nordgearmotors.com

Motor Options

Magnetic Encoder System Mounting

Mounting of the magnetic encoder system is very simple due to an automatic alignment function automatically tightening the screws on the fan cowl and the sensor housing.

In the subsequent trial run, the auxiliary alignment cams are slightly worn down by the counter plate. The connection cable is then fastened to the fan cowl and passed to the terminal box according to the version.

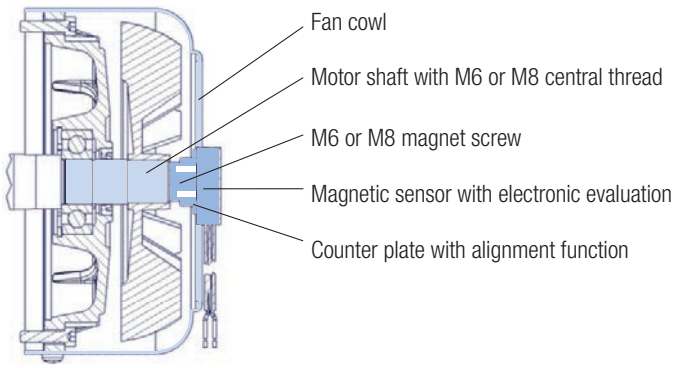

Type Code	Options
MG = Magnetic encoder 01 = 1 pulse 20 = 32 pulses 45 = 256 pulses 0 = loose cable ends (standard)	▸ MG ... M 4-pin, A-coded M12 flange plug connector on the terminal box ▸ MG ... N 4-pole A-coded M12 coupling plug ▸ MG ... V 4-pole cable connector for extension cable

e.g. **MG 45 0** Magnetic encoder (MG) with 256 impulses (45) and loose cable ends (0)

Connections Coupling Plug / Cable Connector	Function Connection
Pin 1 / red	Power supply (+)
Pin 2 / brown	Channel A
Pin 3 / orange	Channel B
Pin 4 / black	Power supply (-)

M12 Plug Connections	Function Connection
Pin 1 / brown	Power supply (+)
Pin 2 / white	Channel A
Pin 3 / blue	Channel B
Pin 4 / black	Power supply (-)

Send Quote Requests to info@automatedpt.com
Call +1(800)985-6929 To Order or Order Online At Nordgearmotors.com

Incremental Encoder (IG)

Incremental encoders convert rotary movement into electrical signals and are often used in modern applications to report speed feedback. Signals are read out and processed by frequency drives or other control devices. Incremental encoders operate according to the photoelectric method by scanning a disc with alternating lines and spaces.

The integrated electronics convert the measuring signals into a digitalized square wave signal according to TTL or HTL logic — there are types with differing resolution/pulse numbers. Standard encoders have 4096 pulses per rotation.

The following configurations can be implemented in combination with NORD frequency encoders:

- Speed control with large adjustment range
- Highly accurate speeds, independent of the load
- Synchronization control
- Position control
- Standstill torques
- High overload reserves

Technical Data		Type / Number of Pulses			
		IG1 / 1024 IG2 / 2048 IG4 / 4096	IG11 / 1024 IG21 / 2048 IG41 / 4096	IG12 / 1024 IG22 / 2048 IG42 / 4096	IG13 / 1024 IG23 / 2048 IG43 / 4096
Interface		TTL / RS 422	TTL / RS 422	HTL push-pull	Line Driver (7272)
Operating voltage $+U_B$	[V]	5 (±5%)	10 – 30	10 – 30	5 – 30
Max. output frequency	[kHz]	300			
Max. operating speed	[min^{-1}]	6000			
Ambient temperature	[°C]	- 20 to +80			
Protection class		IP66			
Max current consumption	[mA]	90	90	150	150

IG...P M12 Connector Pin Assignment (Encoder Side)

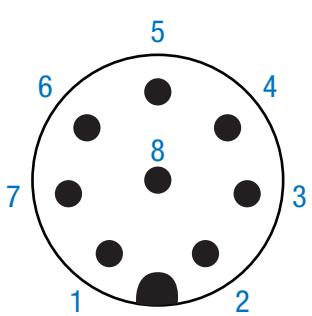

Pin	Signal
1	GND
2	+Us
3	A
4	A-
5	B
6	B-
7	Z
8	Z-

Motor Options

Incremental Encoder Mounting

Encoders can be mounted on motor sizes 63 to 225.

The motors can be either self-ventilated or externally ventilated, with or without brakes. NORD hollow shaft push-in encoders are mounted directly on the B side shaft end of the motor, protected by the fan cowl. This ensures a secure, torsion-free coupling of the encoder.

Electrical connection is via a pre-assembled cable (as standard, 1.5 m long with open wire ends; other lengths or versions with plugs are also possible).

Cable	Bending Radius (Standard)
Permanently mounted	26 mm
Flexibly mounted	78 mm

Encoder Without Plugs

⚠ The wire end is sealed with an ESD shield. This protects the encoder against electrostatic voltages. The connection wiring must be ESD protected.

⚠ Encoders with a protective cover (RD) are only possible with the fitting of an external fan (F).

Example sketches:

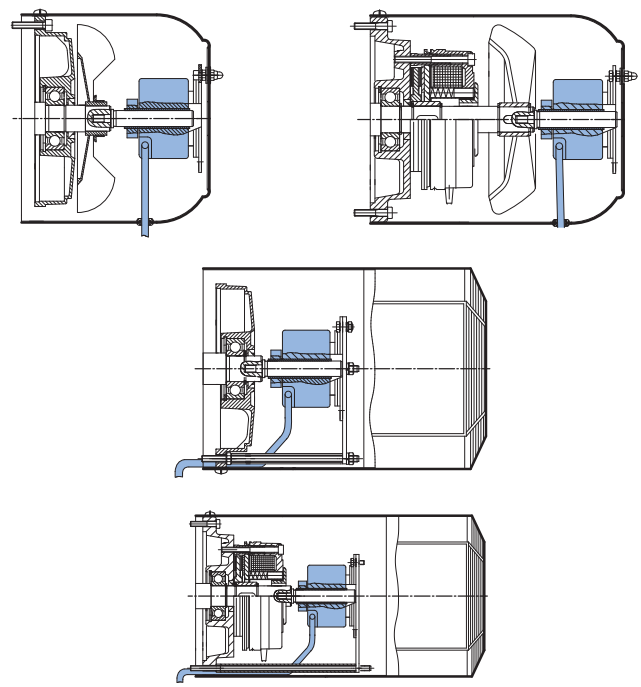

Selection of the encoder according to the output logic is determined by the interface of the evaluation electronics. The following conditions apply for NORD variable frequency drives:

NORDAC Variable Frequency Drive Series		Incremental Encoder Logic	Manual
SK 500P, SK 510P SK 530P, SK 550P	NORDAC *PRO* (SK 500P)	* HTL with 10 – 30V supply TTL with 10 – 30V supply	BU 0600
SK 520E, SK 530E, SK 535E, SK 540E, SK 545E	NORDAC *PRO* (SK 500E)	TTL with 10 – 30V supply	BU 0500 / BU 0505
SK 200E, SK 205E, SK 210E, SK 215E, SK 220E, SK 225E, SK 230E, SK 235E	NORDAC *FLEX* (SK 200E)	* HTL with 10 – 30V supply	BU 0200
NORDAC LINK	(SK 250E - FDS)	* HTL with 10 – 30V supply	BU 0250

* up to max 10 m encoder cable length M20 x 1.5

For further details, please refer to the operating instructions for the VFD.
An external electronic module to convert HTL into TTL signals (e.g. connection of the encoder to SK 530P with very long cables) is available from NORD.

Send Quote Requests to info@automatedpt.com
Call +1(800)985-6929 To Order or Order Online At Nordgearmotors.com

Absolute Encoders (AG)

Absolute encoders are encoders for rotational movements and output absolute position information in the range of a revolution of the motor (360°, **single-turn**) or additionally, the number of rotations with reference to a zero point (**multi-turn**).

Typical values are 8192 (13 Bit) steps per rotation and with multi-turn, 4096 (12 Bit) distinguishable rotations.

Single-turn encoders are mounted on the output side of the system (typically turntables) whereas **multi-turn encoders** are mounted on the output side of the gear unit or directly on the motor.

With absolute encoders the rotations are measured either entirely electromagnetically or mechanically by means of small gear stages that reduce the speed of additional bar code discs.

Advantages Over Incremental Encoders for Positioning Applications

Position information is always up to date, even changes of position when no voltage is present or in the case of lost or impaired pulses.

Absolute encoders cannot be used for speed control (with NORDAC VFDs) however, combined encoders with absolute and additional incremental encoder signals are available. Absolute encoders with various data protocols such as DDI, CANopen, and Profibus are also available — selection depends on the evaluation electronics.

Overview of Multiturn Absolute Encoders

Encoder Type	AG2 - Multi-turn Absolute encoder with Incremental Signals (TTL)	AG7 - Multi-turn Absolute Encoder	AG1 - Multi-turn Absolute Encoder with Incremental Signals (TTL)	AG4 - Multi-turn Absolute Encoder with Incremental Signals (HTL)	AG3 - Multi-turn Absolute Encoder with Incremental Signals (TTL)	AG6 - Multi-turn Absolute Encoder with Incremental Signals (HTL)
For VFD type	SK 54xE / SK 5xxP with SK CU5-ENC/MLT SK 530P / SK 550P with SK CU5-MLT	SK 2xxE, SK 53xE, SK 54xE, SK 5xxP	SK 53xE, SK 54xE, SK 530/550P	SK 2xxE, SK 5xxP	SK 53xE, SK 54xE, SK 530/550P	SK 2xxE, SK 5xxP
Single-turn resolution	8192 (13 Bit)	8192 (13 Bit)	8192 (13 Bit)	8192 (13 Bit)	8192 (13 Bit)	8192 (13 Bit)
Multi-turn resolution	4096 (12 Bit)	4096 (12 Bit)	4096 (12 Bit)	4096 (12 Bit)	65536 (16 Bit)	65536 (16 Bit)
Interface	SSI-Gray-Code	CANopen Profile DS406 V3.1	CANopen Profile DS406 V3.1	CANopen Profile DS406 V3.1	CANopen Profile DS406 V3.0	CANopen Profile DS406 V3.1
CAN Address/ Baud rate	-	Adjustable	Adjustable	Adjustable	Adjustable	Adjustable
Bus cover	-	yes	yes	yes	yes	yes
Incremental encoder output	TTL / RS422 2048 pulses	no	TTL / RS422 2048 pulses	HTL 2048 pulses	TTL / RS422 2048 pulses	HTL 2048 pulsea
Power supply	10 – 30 VDC	10 – 30 VDC	10 – 30 VDC	10 - 30 VDC	10 – 30 VDC	10 - 30 VDC
Referencing	SET - input	über CANopen	über CANopen	über CANopen	über CANopen	über CANopen
Scanning method	optical / mechanical	optical / mechanical	optical / mechanical	optical / mechanical	optical / magnetic	optical / optical
Shaft version	Hollow shaft D=12	Blind hole D=12	Blind hole D=12	Blind hole D=12	Blind hole D=12	Blind hole D=12
Electrical connection	Cable end 1.5 m	Terminal	M12 socket	M12 plug connector	Terminal IG: M12 plug connector	M12 plug connector
Temperature range	-30°C to +75°C	-40°C to +80°C	-40°C to +80°C	-40°C to +80°C	-25°C to +85°C	-25°C to +85°C
IP Protection class	IP67	IP67	IP67	IP67	IP66	IP66

(Only certain CANopen encoders are approved for the SK 500E and SK 200E series)

Send Quote Requests to info@automatedpt.com Call +1(800)985-6929 To Order or Order Online At Nordgearmotors.com

Notes

Send Quote Requests to info@automatedpt.com
Call +1(800)985-6929 To Order or Order Online At Nordgearmotors.com

Send Quote Requests to info@automatedpt.com
Call +1(800)985-6929 To Order or Order Online At Nordgearmotors.com

Brakes

BRAKE SELECTION 52
BRAKE OPTIONS 57
BRAKE RECTIFIERS 61
PERFORMANCE DATA 74
CONNECTION DIAGRAMS 76

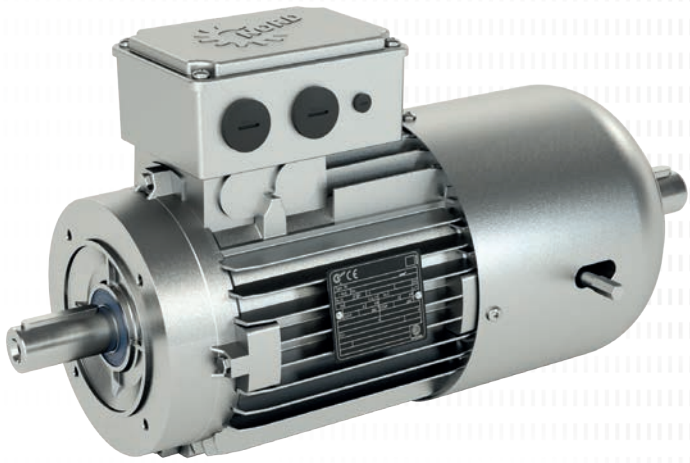

Send Quote Requests to info@automatedpt.com
Call +1(800)985-6929 To Order or Order Online At Nordgearmotors.com

Send Quote Requests to info@automatedpt.com Call +1(800)985-6929 To Order or Order Online At Nordgearmotors.com

Brake Selection

Brake Selection

The selection of a motor brake system is broken down into five phases:

1. Selection of the braking torque
2. Selection of the braking times (release times and setting times)
3. Selection of the electrical supply and connection
4. Selection of brake options
5. Verification of the permissible brake work

Each NORD motor may be supplied with a number of brake torque sizes and adjusted to different brake torque values. The BRE value in the table on page 53 is the standard brake torque size for each motor.

Example for ordering: SK 32 S/4 BRE10 (BRE 10 indicates a brake torque size of 10 Nm)

The design of the drive units is orientated to both the torque required for the application and the motor torque. If necessary, the braking torque must be considerably reduced so that there is no overload of the gear unit when large moving masses are braked.

General Selection Considerations

The brake size must be specified according to the requirements of the application while considering the following:

- For most applications, we advise sizing the brake to 1.5 – 2 times the motor rated torque
- For vertical applications, it may be advisable to size the brake size up to 3 times the motor rated torque
- For some applications, it may be necessary to specify a reduced brake torque setting to prevent excessive peak load conditions developed at the reducer output
- On travel drive applications, excessive brake torque may lead to wheel skid; for crane applications, excess hoist-cable swing can occur

Brake Motors

NORD brake motors are equipped with DC-excited spring pressure brakes. The brakes prevent accidental rotation of machines (as holding brakes) or bring rotation of the machine to a standstill (as a working brake or for emergency stop).

Environment

The brake linings are environmentally safe and asbestos-free.

Safety

The braking action is activated upon interruption of the current (idling current principle). The brake can no longer be released if the brake linings are worn.

Idling Current Principle

The brake disc is located between the brake bearing cover and the rotor plate and features a brake lining on both sides. Braking torque is transferred to the motor shaft by means of the coupling. The brake disc can be moved in an axial direction on the coupling. The rotor plate presses the brake disc against the brake cover plate by means of spring pressure and friction between the rotor plate / brake lining and between the brake bearing cover / brake lining produces the braking torque. The brake is then released by an electromagnet (magnetic component).

After the current is switched on, the electromagnet pulls the rotor plate back from the brake lining by several tenths of a millimeter against the pressure of the spring. This allows the brake disc to rotate freely. Interruption of the current causes the magnetic force to collapse, so that the spring pressure predominates. This allows the brake to be automatically activated.

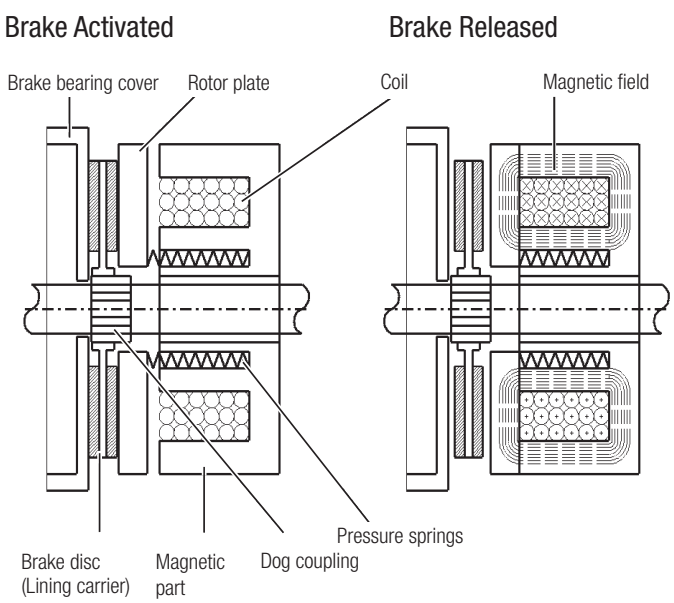

Power-to-Apply Principle

Brakes that are activated by the force of an electro-magnet are designated as power-to-apply brakes. Contact NORD for more information.

Send Quote Requests to info@automatedpt.com
Call +1(800)985-6929 To Order or Order Online At Nordgearmotors.com

NORD DRIVESYSTEMS

Motor Size & Efficiency			Brake Size and Torque									
				BRE5	BRE10	BRE20	BRE40	BRE60	BRE100	BRE150	BRE250	BRE400	BRE800
			Nm	5	10	20	40	60	100	150	250	400	800
Frame Size	IE1	IE3	lb-in	44	89	177	354	531	885	1328	2213	3540	7080
			lb-ft	3.7	7.4	14.8	29.5	44.3	73.8	111	184	295	590
63	S/L	SP/LP		●	○*, †								
71	S/L	SP/LP		●	○*								
80	S	SP		●	○	○*							
80	L	LP		○	●	○*							
90	S	SP			○	●	○*						
90	L	LP			○	●	○*						
100	L	LP				●#	○#	○*, †					
100	LA	AP				○#	●#	○*, †					
112	M	MP				○	○	●					
132	S	SP						●	○	○*			
132	M	MP						○	●	○*			
132	MA	-						○	○	●*			
160	M	MP							○	●	○		
160	L	LP							○	○	●		
180	MX	-								○	●		
180	LX	-								○	●		
180	-	MP									●	○*, †	
180	-	LP									●	○*, †	
225	-	RP									○	●	
225	-	SP									○	●	
225	-	MP										○	●
250	-	WP										○	●
Weight		kg		2	3	5.5	7	10	16	22	32	50	53
		lb		4.4	6.6	12.1	15.4	22	35	49	71	110	117
Inertia		kg-m² x 10^{-3}		0.015	0.045	0.153	0.45	0.86	1.22	2.85	6.65	19.5	39
		lb-ft² x 10^{-3}		0.356	1.068	3.63	10.68	20.4	29.0	67.6	158	463	926

● Standard offering
○ Optional offering
* IP66 brake not possible
† Manual brake release option not possible
\# Spanner nut adjustment not available

Send Quote Requests to info@automatedpt.com
Call +1(800)985-6929 To Order or Order Online At Nordgearmotors.com

Brake Selection

Note:

The brake torque is measured with a mean friction radius of the brake pad surface with a circumferential speed of 1m/sec (197 fpm).

For different applications and operating conditions, brake torque can vary from +40/-20% compared to the rated brake torque.

Hoisting (lifting/lowering) applications must have the brake wired for fast response (DC-switching).

In new condition, the brake will have a reduced torque of up to 30%. In order to achieve full rated brake torque, a short run-in period is required. The run in time will vary depending on system loads.

The brake rotor or brake pad must be protected against foreign matter, oil and grease. Contaminants of this type can greatly influence wear and reduce breaking torque.

Brake Torque Adjustment (ADJ)

Build

Brake torque adjustments are possible by changing the brake spring combinations or by removing springs.

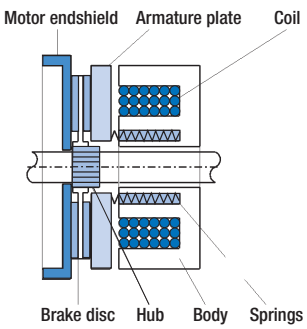

Brake Size	7 Springs		5 Springs		3 Springs	
	[Nm]	[lb-ft]	[Nm]	[lb-ft]	[Nm]	[lb-ft]
BRE5	5	3.7	3.5	2.6	2	1.5
BRE10	10	7.4	7	5.2	4	3.0
BRE20	20	14.8	14	10.3	8	5.9
BRE40	40	29.5	28	20.7	17	12.5
BRE60	60	44.3	43	31.7	26	19.2
BRE100	100	73.8	70	51.6	42	31.0
BRE150	150	111	107	78.9	65	47.9

When adjusting the brake torque, start by removing the outer springs at opposite corners to prevent uneven brake wear.

On brake sizes 5 – 150 Nm (3.7 – 111 lb-ft) full brake torque is achieved with all (7) springs. The brake springs are placed in such a manner where there are (3) inner and (4) outer springs.

In addition, brake sizes from 5 – 40 Nm (3.7 – 30 lb-ft) are typically supplied with a threaded adjustment nut or spanner nut. Additional fine torque adjustment can be made by unscrewing the spanner nut a number of turns or “clicks” with a spanner wrench.

Spanner Nut Adjustment

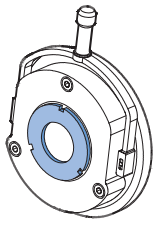

Brake Size	Torque Reduction[1]		Max Turns	Minimum Torque[2]	
	[Nm]	[lb-ft]		[Nm]	[lb-ft]
BRE5	0.2	0.15	6	0.8	0.59
BRE10	0.2	0.15	12	1.6	1.18
BRE20	0.3	0.22	12	4.4	3.25
BRE40	1.0	0.74	9.0	8.0	5.90

1) With the minimum number of springs and maximum number of turns to the spanner nut
2) Per each turn of the spanner nut

Send Quote Requests to info@automatedpt.com
Call +1(800)985-6929 To Order or Order Online At Nordgearmotors.com

Working brake and Holding brake

A working brake implements friction work in regular operation when the motor power is turned off, i.e. performs a braking function. This brake stops a moving load or application frequently and regularly, not only as an occasional or special case. **Any non-inverter application needing braking requires a working brake.**

A holding brake **does not** implement any friction work in regular operation, but only serves to secure an already stopped load or application. This brake is typically used with a frequency inverter and is engaged once the frequency inverter has already brought the application to a stop. A holding brake may perform a braking function in the event of an emergency stop or power loss but must be sized according to the maximum permissible work per cycle for that brake.

Examples for Holding brake and Working brake

Working brake

The geared motor is directly supplied by the line voltage supply. To slow down the application when the motor is powered off at speed, the mechanical spring-loaded brake must generate a braking torque and thus performs friction work.

Holding brake

A frequency inverter controls the acceleration and deceleration of the application. The mechanical spring-loaded brake is only applied after the application has come to a standstill. The brake is therefore only used for “holding” the application (parked position). It does not perform any friction work. Only in the event of an emergency stop or power failure is friction work done while moving.

Brake Times and Electrical Selection

Brake timing performance is critical in selecting the optimal brake system. NORD brakes provide exceptional performance in terms of the release (start) times and engagement (stop) times. Use the following guidelines in order to select the correct brake control components and connections.

1) Determine if the brake needs to be wired directly from the motor terminal block or powered by a separate source.
   - If you are using an AC vector drive, soft-start, or a two-speed motor you will need to supply the rectifier from a seperate power source
   - If the motor is powered direct across-the-line, the rectifier power can be supplied from the motor’s terminal block
2) What type of performance is required?
   - Is the standard brake performance OK?
   - Is a higher performance required for fast brake release or very fast brake stopping?
3) Determine the brake supply voltage and check rectifier compatibility

When Fast or Very Fast Stopping is Recommended

Any applications that require quick stops and positive action at stand-still, as well as all vertically mounted applications.

Recommended Applications

- Conveyors and inclined conveyors
- Hoists and lifts
- Bulk material handling equipment (bucket elevators, idler conveyors)

When Fast-Release is Recommended (Overexcitation)

Any application that is very high-cycling with frequent starts and stops. These applications require the brake to release very quickly in order to avoid excessive heat build-up in the AC motor and brake coil.

Recommended Applications

- Index conveyors
- Diverters
- Storage and retrieval crane systems

Send Quote Requests to info@automatedpt.com
Call +1(800)985-6929 To Order or Order Online At Nordgearmotors.com

Brake Selection

Power Source	Brake Release (start)	Brake Engagement (stop)	Braking Method	Rectifier
Motor Terminal Block	Standard	Standard (AC switching)	10	GVE/GHE/GUE
	Standard	Fast (DC switching)	15	GVE/GHE/GUE
	Standard	Very Fast (Reduced power holding)	40	GPE/PMG
	Fast (Overexcitation)	Standard (AC switching	30	GPE/PMG
	Fast (Overexcitation)	Fast (DC switching)	35	GPE/PMG
Separate Power Source	Standard	Standard (AC switching)	20	GVE/GHE/GUE
	Standard	Fast (DC switching)	25	GVE/GHE/GUE
	Standard	Very Fast (Reduced power holding)	55	GPU/PMG
	Fast (Overexcitation)	Standard (AC switching)	45	GPU/PMG
	Fast (Overexcitation)	Fast (DC switching)	50	GPU/PMG

Braking methods referenced in connection diagrams on pages 76.

Rectifier Styles

GV - Full wave rectifier (bridge)
GH - Half wave rectifier
GU - Combination rectifier; can be connected full or half wave

GPE - Hybrid rectifier; full wave then switches to half wave
PMG - Hybrid rectifier; full wave then switches to half wave
GPU - Hybrid rectifier; full wave then switches to half wave, has integrated DC switching via voltage sensing

Send Quote Requests to info@automatedpt.com
Call +1(800)985-6929 To Order or Order Online At Nordgearmotors.com

Brake Options

Brake Options

Abbreviation	Description	Modify	Build	Page
ADJ	Torque adjustment		●	54
FHL	Locking hand release lever	●		58
HL	Hand release lever	●		58
HLH	Hand release lever with hole		●	58
IP66	IP66 brake enclosure		●	58
IR	Current sensing relay	●		60
MIK	Micro-switch		●	59
NRB1	Quiet brake release		●	59
NRB2	Quite brake motor operation		●	59
RG	Corrosion protected brake		●	58
SR	Dust and corrosion protected brake		●	58

Rectifier Options

Abbreviation	Description	Page
GHE	Half wave rectifiers	68
GPE	Push hybrid rectifiers - external DC switching	70
GPU	Push hybrid rectifiers - integrated DC switching	71
GUE	Dual rectifier - full/half wave	69
GVE	Full wave rectifiers	67
PMG	Push hybrid rectifier - integrated DC switching	72
MSG	Roba®-Switch external DC switching	73

Brake Nomenclature

BRE – –

- Additional brake options
- Brake size/torque rating
- Brake

Ordering Examples

BRE 100 HL RG IR

- Current sensing relay
- Corrosion protected brake
- Hand release lever
- 100 Nm brake torque
- Brake

Brake, 100 Nm with a hand release lever, corrosion protected brake, and a current sensing relay

BRE 40 FHL SR

- Dust and corrosion protected brake
- Locking hand release lever
- 40 Nm brake torque
- Brake

Brake, 40 Nm with a locking hand release lever, and dust and corrosion protected brake

Send Quote Requests to info@automatedpt.com
Call +1(800)985-6929 To Order or Order Online At Nordgearmotors.com

Brake Options

Hand Release Lever (HL) — Modify

The hand release option allows the brake to be manually released without requiring that the brake be energized with voltage. The lever has a spring return that allows the brake to be hand released and returned automatically to its set position. The hand release lever can be unscrewed for easy removal.

Locking Hand Release Lever (FHL) — Modify

This option allows the brake to be manually released and locked off without requiring voltage to the brake. The lock mechanism prevents the spring from returning the brake to a closed state without manual action by the user. The hand release lever can be unscrewed for easy removal.

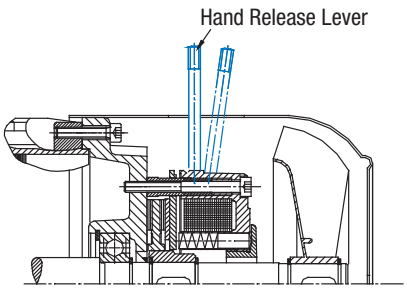

Hand Release Lever (HL)

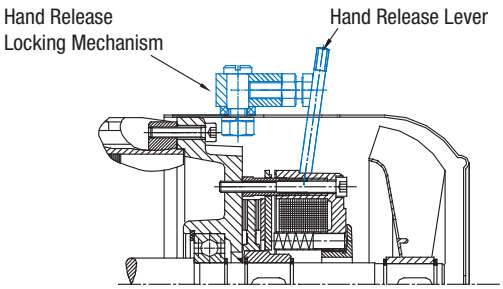

Locking Hand Release Lever (FHL)

Hand Release Lever With Hole (HLH)

Hand release levers can be provided with a 5.5 mm through hole. The hole can be used for attaching external pulling devices such as a cord to release the brake at a distance. This option is available for brake sizes BRE5 to BRE60.

Hand release lever location is required for HL, FHL, and HLH options.

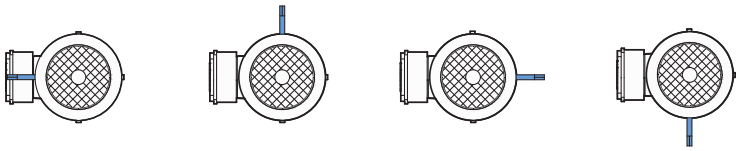

Position 1 Position 2 Position 3 Position 4

Corrosion Protected Brake (RG) — Build

The brake is fitted with a stainless steel brake plate to provide additional protection in severe and wet environments.

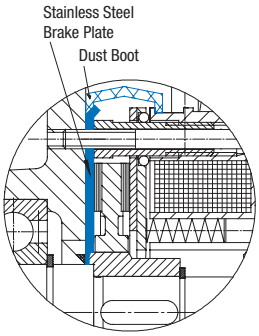

Dust and Corrosion Protected Brake (SR) — Build

A rubber-sealing boot is installed on the brake to provide additional protection in dusty environments. This feature includes the stainless steel brake plate (RG).

IP66 Brake Enclosure (IP66) — Build

A sealed brake with IP66 enclosure protection can also be provided. This brake has a different mechanical housing that provides a higher degree of protection against severe environments.

Brake Heating — Build

Brakes can be provided with a number of different heating systems. Contact NORD to discuss the details of your application.

Send Quote Requests to info@automatedpt.com
Call +1(800)985-6929 To Order or Order Online At Nordgearmotors.com

Quiet Brake Release (NRB1)

Build

To reduce the noise of the brake release, an o-ring can be placed between the brake coil body and the armature plate (stationary disc). The o-ring dampens the impact caused by the armature plate hitting the brake coil body during the release process. When ordering NRB1, the SR (dust boot) option is required. The SR option also includes the RG stainless steel corrosion plate.

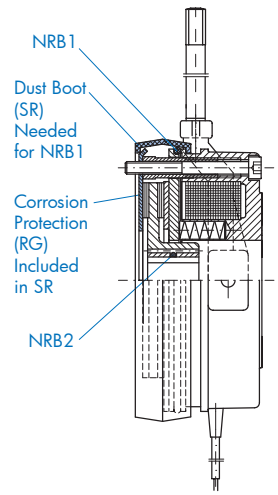

Quiet Brake Operation (NRB2)

Build

Noise due to vibration in the brake components is possible during motor operation particularly with variable frequency drives or single phase motor operation. To reduce this vibration, the brake can be constructed with an o-ring between the brake carrier hub and the brake disc. This o-ring will prevent the clattering caused by the rapid micro speed changes in the motor caused by the VFD or single phase operation.

Double Brakes for Theatrical Applications (DBR)

Build

Many international standards for braking systems used on theater hoists mandate the use of brakes that automatically set when power is removed. Redundancy is also required with the system brakes. If one brake fails, the other brake can still operate the system by running independently and parallel to each other. NORD DBR (2xBRE) brake systems are designed to meet these requirements. NORD double brakes are also designed for quiet operation < 50dB(A).

Contact NORD for engineered selection.

Micro Switch (MIK)

Build

The micro switch monitors the release state of the brake and can be wired into external control circuitry to provide additional safety. The switch can also be used to detect certain brake service problems including excessive brake wear.

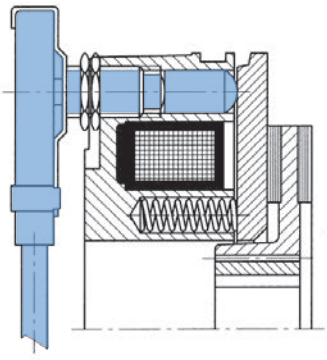

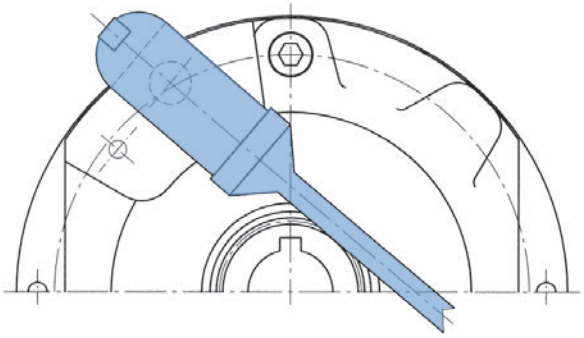

Send Quote Requests to info@automatedpt.com
Call +1(800)985-6929 To Order or Order Online At Nordgearmotors.com

Brake Options

Current Sensing Relay (IR)

Modify

The current sensing relay is used to achieve a fast brake engagement (stopping) without the use of external control equipment or additional wiring. The relay is mounted directly on the conduit box, and is powered from the motor's terminal block. The power leads for the relay replace one of the brass jumper bars on the terminal block of any single speed motor and the switch leads are connected to terminals 3 and 4 of the rectifier. When the power to the motor is shut off, the IR relay opens the brake circuit on the DC side which allows the brake to de-magnetize quickly.

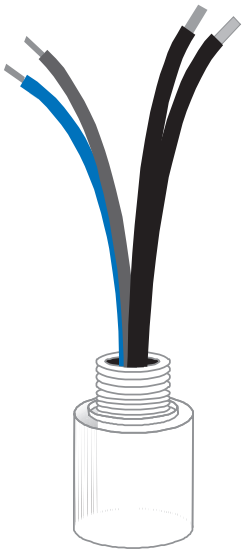

Brake must be powered from the motor's terminal block (not seperately powered). Motor must be single speed and should not be powered by a VFD or soft starter.

Part Number	18556050	18556060
Reissmann Part Number	RSR 25-46	RSR 50-46
Primary Current Rating (black/white wires)	$25A_{AC}$	$50\ A_{AC}$
Maximum Primary Current (black/white wires)	$75A_{AC}$	$150\ A_{AC}$
Maximum Time at Maximum Primary Current	0.2 s	0.2 s
Maximum Cycles per Hour	500	500
Switching Voltage	$42 – 550V_{DC}$	$42 – 550V_{DC}$
Switching Current (red/blue wires)	$1.0\ A_{DC}$	$1.0\ A_{DC}$
Holding Current[1]	$< 0.7\ A_{AC}$	$< 0.7\ A_{AC}$
Delay Time[2]	18 ms	18 ms
Enclosure Rating	IP65	IP65
Ambient Temp.	-25 to 90°C (-40 to 167°F)	-25 to 90°C (-40 to 167°F)

[1] Relative to the distortion created by the magnetizing current of the motor

[2] Additional setting time delay added to the DC-setting time of the brake circuit

IR Relay Wiring Diagram

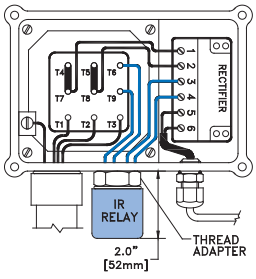

Rectifier			IR-Relay Wires to Rectifier	
Model Type	Part Number	Design	Red	Blue
GVE20L	19141000	Full-wave	4	3
GHE40L	19141010	Half-wave	4	3
GHE50L	19141020	Half-wave	4	3
GPE20L	19140230	Push-hybrid	4	3
GPE40L	19140240	Push-hybrid	4	3
GUE40V	19140300	Dual Wave	4	3

Conduit Box Thread Adapter

Thread	Motor Frame	Part Number
M20	63-71	18542006*
M25	80-90	18522253
M32	100-132	18522320
M40	160	18522400 +18522253

* Spacer

Brake Rectifier Overview

Brake Control Rectifiers

Brake control rectifiers convert AC voltage to DC voltage. In many instances AC voltage is used to power the motor but DC voltage is required to power the brake. Since DC power is not commonly available, brake rectifiers are used. NORD brakemotors typically include a rectifier that is located inside the terminal box and can be powered by the motor terminal block or by a separate power source.

Rectifier Advantages

- Individual power source for each brake
- Compact size, mounted inside the terminal box
- Multiple types, voltage options, and release/engagement modes available
- Mountable in a separate control cabinet
- Integral protection against voltage spikes

Rectifier Types

Full-Wave Rectifier:
The DC output voltage is 90% of the applied input AC voltage.

Half-Wave Rectifier:
The DC output voltage is 45% of the applied input AC voltage.

Dual Rectifier (Full/Half-Wave):
The GUE rectifier is a “dual” rectifier that is either a full-wave or a half-wave rectifier depending on how it is connected. An advantage for using this rectifier is when using it together with a 205 VDC brake coil, it is able to operate on either a 230 VAC or 460 VAC power connection.

Push-Hybrid Rectifier (Full/Half-Wave):
These rectifiers are designed to switch from an initial full-wave mode to a final half-wave mode. They include GPE, GPU, and PMG rectifier types and are utilized to improve brake performance by providing faster stopping times or shorter brake release times.

Rectifier Terminals	Description
1, 1a, 1b, & 2	Brake supply, AC voltage
3 & 4	DC-switching contact or jumper
5 & 6	Connection to brake coil

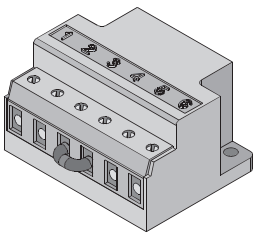

Send Quote Requests to info@automatedpt.com
Call +1(800)985-6929 To Order or Order Online At Nordgearmotors.com

Brake Rectifier Overview

Rectifier Protection

Coated Electronics (G...L)

NORD standard rectifiers are provided with each brake motor (except 24 VDC brakes) unless a sealed or high performance rectifier is specified.

Rectifier	Part #	Type	Color
GVE20L	19141000	Full-wave	Black
GHE40L	19141010	Half-wave	Yellow
GHE50L	19141020	Half-wave	Grey

Potted Electronics (G…V)

NORD offers rectifiers that are sealed with an electrically safe resin to ensure that water and moisture will not pass into the rectifier. Sealed rectifiers have the same brake performance ratings as the standard rectifier and can be beneficial if water is present in the motors terminal box.

Rectifier	Part #	Type	Color
GVE20V	19141030	Full-wave	Black
GHE40V	19141040	Half-wave	Yellow
GHE50V	19141050	Half-wave	Grey
GUE40V	19140300	Full/Half-Wave	Black

Rectifier Nomenclature

G H E 4 0 L

Electronic Protection
L = Varnish coated
V = Potted/Resin Sealed

Components Current Rating
0 = 0.5A (75°C)
1 = 1.5A (75°C)

Voltage Range
2 = Up to 275 VAC input
4 = Up to 480 VAC input
5 = Up to 575 VAC input

Type of DC Switching
E = External DC-switching (contact)
U = Internal DC-switching (voltage)

Type of Rectifier
H = Half-wave
V = Full-wave (bridge)
P = Push-Hybrid (full & half-wave)
U = Combo (full & half-wave)

Rectifier

Send Quote Requests to info@automatedpt.com
Call +1(800)985-6929 To Order or Order Online At Nordgearmotors.com

Stopping Methods

Stopping Methods

NORD brake rectifiers have the ability to provide different stopping performance. The different performance is achieved by using a different rectifier and/or wiring the rectifier differently. The different methods include:

- Standard stopping (AC switching)
- Fast stopping (DC switching)
- Fast stopping (DC switching via integrated voltage sensing)
- Very fast stopping (reduced power holding and DC switching)
- Very fast stopping (reduced power holding and DC switching via integrated voltage sensing)

Standard Stopping (AC Switching)

The rectifier can be wired to operate by supplying and removing AC power, commonly called AC switching. The advantage to using AC switching is that the rectifier can be powered directly from the motor's terminal block and no additional wiring is required. However, tapping into the motor's terminal block gives the slower stopping time due to the de-energizing time of the motor's magnetic field. The stopping time can be improved by wiring the rectifier from an external power supply.

(AC SWITCHING)
NORMAL BRAKE STOPPING TIME

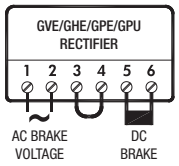

(AC SWITCHING)
NORMAL BRAKE STOPPING TIME

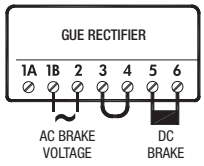

Power Source	Brake Release (Start)	Brake Engagement (Stop)	Braking Method*	Rectifier
Motor terminal block	Standard	Standard (AC switching)	10	GVE, GHE, or GUE
	Fast (overexcitation)	Standard (AC switching)	30	GPE or PMG 500
Separate power source	Standard	Standard (AC switching)	20	GVE, GHE, or GUE
	Fast (overexcitation)	Standard (AC switching)	45	GPU or PMG 500

* Braking methods referenced in connection diagrams on pages 76 – 86.

Fast Stopping (DC Switching)

DC switching directly interrupts the current flow in the DC circuit of the rectifier. This provides much faster stopping because you do not need to wait for the motor's magnetic field to de-energize. To implement DC switching, a normally open relay must be installed between terminals 3 and 4 on the rectifier for rectifier types GVE, GHE, and GPE. For GPU type rectifiers, simply remove the jumper between terminals 3 and 4 to activate DC switching.

(DC SWITCHING - EXTERNAL)
FAST BRAKE STOPPING

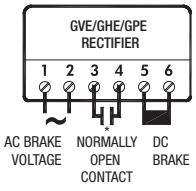

(DC SWITCHING - INTERNAL)
FAST BRAKE STOPPING

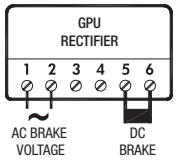

(DC SWITCHING)
NORMAL BRAKE STOPPING TIME

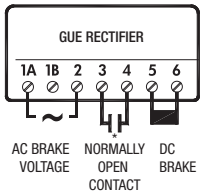

Power Source	Brake Release (Start)	Brake Engagement (Stop)	Braking Method*	Rectifier
Motor terminal block	Standard	Fast (DC switching)	15	GVE, GHE, or GUE
	Fast (overexcitation)	Fast (DC switching)	35	GPE or PMG 500
Separate power source	Standard	Fast (DC switching)	25	GVE, GHE, or GUE
	Fast (overexcitation)	Fast (DC switching)	50	GPU or PMG 500

* Braking methods referenced in connection diagrams on pages 76 – 86.

Send Quote Requests to info@automatedpt.com Call +1(800)985-6929 To Order or Order Online At Nordgearmotors.com

Stopping Methods

Fast Stopping (DC Switching Via Integrated Voltage Sensing)

Our GPU rectifiers integrate DC Switching by sensing the AC voltage supplied to the rectifier. When no voltage is present the GPU rectifier automatically opens the DC circuit. The GPU rectifier is primarily designed for use with a separate brake power source, such as VFD powered motors, soft-start motors, and two-speed motors.

RAPID BRAKE REACTION TIME
(DC SWITCHING - INTERNAL)

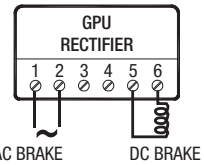

Terminals 1 & 2	Brake system connection to AC supply voltage
Terminals 3 & 4	No jumper connected
Terminals 5 & 6	DC voltage connection to the brake coil

Power Source	Brake Release (Start)	Brake Engagement (Stop)	Braking Method*	Rectifier
Separate power source	Fast (Overexcitation)	Fast (DC switching)	50	GPU

* Braking methods referenced in connection diagrams on pages 76 – 86.

Very Fast Stopping (DC Switching Via Reduced Power Holding)

In reduced power holding, the rectifier initially supplies the rated DC voltage to the brake coil. When voltage is first applied, the rectifier operates as a full-wave rectifier (90% of the applied AC voltage), releasing the brake in the standard time. After the brake is released, the rectifier switches to half-wave mode (45% of the applied DC voltage), weakening the brake's magnetic field. The weaker field will allow the brake to stop more quickly when power is removed. In this method the brake coil is selected as if the brake system is powered by a full-wave rectifier. Therefore, the brake coil's DC-voltage rating should be 90% of the AC voltage applied to the rectifier.

RAPID BRAKE REACTION TIME
(DC SWITCHING - EXTERNAL)

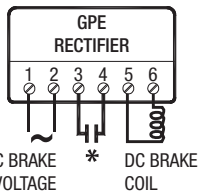

Terminals 1 & 2	Brake system connection to AC supply voltage
Terminals 3 & 4	Installed jumper for AC switching or switch contact (as shown) for DC switching
Terminals 5 & 6	DC Voltage connection to the brake coil

* The normally open contact/s (NO) is not supplied by NORD. It must close at the same time power is supplied to the brake. The contact must be capable of switching inductive loads and/or be rated IEC AC3.

RAPID BRAKE REACTION TIME
(DC SWITCHING)

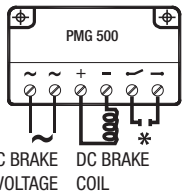

Terminals ~ & ~	Brake system connection to AC supply voltage
Terminals + & -	DC voltage connection to the brake coil
Terminals ⌣ & →	Installed jumper for AC switching or switch contact (as shown) for DC switching

* The normally open contact/s (NO) is not supplied by NORD. It must close at the same time power is supplied to the brake. The contact must be capable of switching inductive loads and/or be rated IEC AC3.

Power Source	Brake Release (Start)	Brake Engagement (Stop)	Braking Method*	Rectifier
Motor terminal block	Standard	Very fast (reduced power holding)	40	GPE or PMG 500
Separate power source	Standard	Very fast (reduced power holding)	55	GPU or PMG 500

* Braking methods referenced in connection diagrams on pages 76 – 86.

Send Quote Requests to info@automatedpt.com
Call +1(800)985-6929 To Order or Order Online At Nordgearmotors.com

Send Quote Requests to info@automatedpt.com Call +1(800)985-6929 To Order or Order Online At Nordgearmotors.com

Very Fast Stopping (DC switching Via Reduced Power Holding and Integrated Voltage Sensing)

In reduced power holding, the rectifier initially supplies the rated DC voltage to the brake coil. When voltage is first applied, the rectifier operates as a full-wave rectifier (90% of the applied AC voltage), releasing the brake in the standard time. After the brake is released, the rectifier switches to half-wave mode (45% of the applied DC voltage), weakening the brake's magnetic field. The weaker field will allow the brake to stop more quickly when power is removed. In this method the brake coil is selected as if the brake system is powered by a full-wave rectifier. Therefore, the brake coil's DC-voltage rating should be 90% of the AC voltage applied to the rectifier.

These GPU rectifiers integrate DC switching, which is triggered by sensing the AC voltage supplied to the rectifier. When no voltage is present the GPU rectifier automatically opens the DC circuit. The GPU rectifier is primarily designed for use with a separate brake power source, such as VFD powered motors, soft-start motors, and two-speed motors.

RAPID BRAKE REACTION TIME
(DC SWITCHING - INTERNAL)

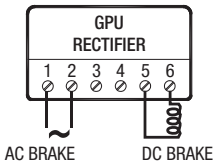

Terminals 1 & 2	Brake system connection to AC supply voltage
Terminals 3 & 4	No jumper connected
Terminals 5 & 6	DC voltage connection to the brake coil

Power Source	Brake Release (Start)	Brake Engagement (Stop)	Braking Method*	Rectifier
Separate power source	Standard	Very fast (reduced power holding)	55	GPU

* Braking methods referenced in connection diagrams on pages 76 – 86.

Send Quote Requests to info@automatedpt.com
Call +1(800)985-6929 To Order or Order Online At Nordgearmotors.com

Release Methods

Release Methods (Motor Starting)

NORD brake rectifiers can provide different types of release performance. The difference in performance is achieved by using a different rectifier and/or wiring the rectifier differently. The different methods include:

- Standard brake release (constant voltage)
- Fast brake release (overexcitation)

Standard Brake Release (Constant Voltage)

For the standard brake release method, the DC brake coil is supplied by a constant rated DC voltage to magnetize the brake coil and release the brake. Typically, the DC brake voltage is supplied via a brake rectifier. The brake rectifier converts AC supply voltage to DC output voltage to power the brake. NORD can supply rectifiers that are either full-wave or half-wave designs. The brake is released by supplying the rectifier with AC voltage which in turn supplies the brake coil with the needed DC voltage.

Standard Brake Release Example

Full Wave	
System Voltage	230 VAC
Brake Coil	205 VDC

Half Wave	
System Voltage	460 VDC
Brake Coil	205 VDC

Fast Brake Release (Overexcitation)*

In overexcitation the rectifier initially over-voltages the brake coil. This overexcitation of the rectifier produces a magnetic field in the brake coil that is stronger than normal, releasing the brake much more quickly. The rectifier is then switched over to a lower holding voltage so as not to thermally overload the brake coil. In this method the brake coil is selected as if the brake system is powered by a half-wave rectifier. Therefore, the brake coil's DC-voltage rating should be 45% of the AC voltage applied to the rectifier.

Fast Brake Release Example

System Voltage	230 VAC
Brake Coil	105 VDC

Initial Brake Release Voltage	205 VDC
Holding Brake Voltage	105 VDC

*Requires half-wave rectifier

Send Quote Requests to info@automatedpt.com
Call +1(800)985-6929 To Order or Order Online At Nordgearmotors.com

Full-Wave Rectifiers (GVE)

Full-Wave Rectifiers (GVE)

The full-wave rectifiers' DC output voltage is 90% of the applied input AC voltage.

If the motor is connected to a variable frequency drive, soft start, or is a two-speed motor, the AC power must be supplied to the brake rectifier separately from the motor power.

Ratings & Part Numbers

Model Type	GVE20L	GVE20V
Part Number	19141000	19141030
Protection (Electronics)	Coated	Encapsulated
Color	Black	
Input Voltage (V_{AC})	110 – 275 +/- 10% V_{AC}	
Output Voltage (V_{DC})	(V_{DC} =0.90 x V_{AC})	
Rated Current @ 40°C	1.5 A	
Rated Current @ 75°C	1.0 A	
Temperature Range	-20°C to 75°C	
DC Switching via	External contact or IR relay	

Braking Method

Braking Method	Break Release (Start)	Brake Engage (Stop)	Power Source
10	Standard	Standard (AC switching)	Motor terminals
15	Standard	Fast (DC switching)	Motor terminals
20	Standard	Standard (AC switching)	Separate power
25	Standard	Fast (DC switching)	Separate power

GVE Rectifier Dimensions

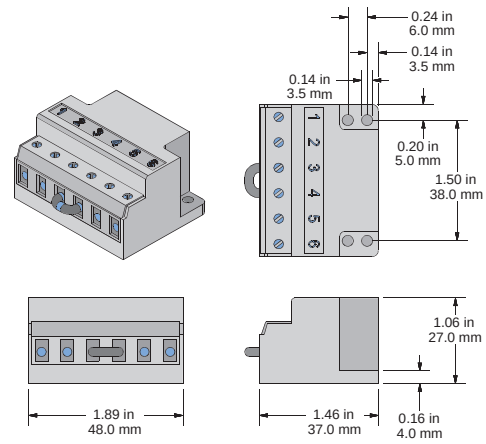

Basic Connection

The GVE brake system can be connected for standard (AC switching) or fast stopping (DC switching).

Standard Stopping AC switching

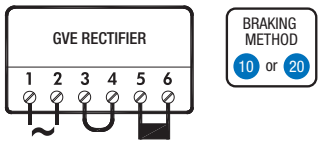

1 & 2	3 & 4	5 & 6
AC Brake Voltage	Jumper	DC Brake

Fast Stopping DC switching

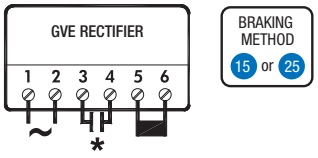

1 & 2	3 & 4	5 & 6
AC Brake Voltage	Normally Open Contact	DC Brake

* The normally open contact/s (NO) is not supplied by NORD. It must close at the same time power is supplied to the brake. The contact must be capable of switching inductive loads and/or be rated at IEC AC3.

Send Quote Requests to info@automatedpt.com
Call +1(800)985-6929 To Order or Order Online At Nordgearmotors.com

Half-Wave Rectifiers (GHE)

Half-Wave Rectifiers (GHE)

The GHE half-wave rectifiers' DC output voltage is 45% of the applied input AC voltage.

If the motor is connected to a variable frequency drive, soft start, or is a two-speed motor, the AC power must be supplied to the brake rectifier separately from the motor power.

Ratings & Part Numbers

Model Type	GHE40L	GHE40V	GHE50L	GHE50V
Part Number	19141010	19141040	19141020	19141050
Protection (Electronics)	Coated	Encapsulated	Coated	Encapsulated
Color	Yellow		Grey	
Input Voltage (V_{AC})	200 – 480V_{AC} +/- 10%		200 – 575V_{AC} +/- 10%	
Output Voltage (V_{DC})	(V_{DC} =0.45 x V_{AC})		(V_{DC} =0.45 x V_{AC})	
Rated Current @ 40°C	2.0ADC		2.0ADC	
Rated Current at 75°C	1.0ADC		1.0ADC	
Temperature Range	-20°C to 75°C		-20°C to 75°C	
DC Switching via	External contact or IR relay		External contact or IR relay	

Braking Method

Braking Method	Break Release (Start)	Brake Engage (Stop)	Power Source
10	Standard	Standard (AC switching)	Motor terminals
15	Standard	Fast (DC switching)	Motor terminals
20	Standard	Standard (AC switching)	Separate power
25	Standard	Fast (DC switching)	Separate power

GHE Rectifier Dimensions

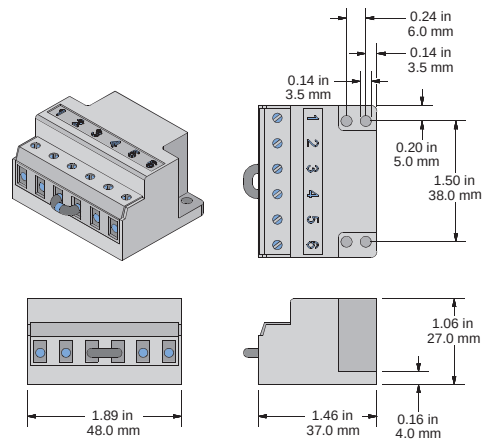

Basic Connection

The GHE brake system can be connected for standard (AC switching) or fast stopping (DC switching).

Standard Stopping AC Switching

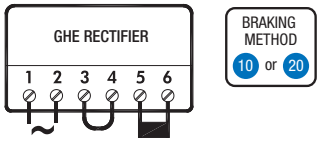

1 & 2	3 & 4	5 & 6
AC Brake Voltage	Jumper	DC Brake

Fast Stopping DC Switching

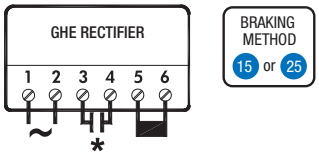

1 & 2	3 & 4	5 & 6
AC Brake Voltage	Normally Open Contact	DC Brake

* The normally open contact/s (NO) is not supplied by NORD. It must close at the same time power is supplied to the brake. The contact must be capable of switching inductive loads and/or be rated at IEC AC3.

Dual-Wave Rectifiers (GUE)

Dual-Wave Rectifiers (GUE)

The GUE rectifier is a dual rectifier that is either a full-wave or a half-wave rectifier depending on how it is connected. An advantage for using this rectifier is when using it together with a 205 VDC brake coil, it is able to operate on either a 230 VAC or 460VAC power connection.

If the motor is connected to a variable frequency drive, soft start, or is a two-speed motor, the AC power must be supplied to the brake rectifier separately from the motor power.

Ratings & Part Numbers

Model Type	GUE40V	
Part Number	19140300	
Protection (Electronics)	Coated	
Color	Black	
Input Voltage (V_{AC})	230 V_{AC} +/- 10%	460 V_{AC} +/- 10%
Output Voltage (V_{DC})	(V_{DC} =0.90 x V_{AC}) Full-Wave	(V_{DC} =0.45 x V_{AC}) Half-Wave
Rated Current @ 40°C	0.7 A	
Rated Current @ 75°C	0.5 A	
Temperature Range	-20°C to 75°C	
DC Switching via	External contact or IR relay	

Braking Method

Braking Method	Break Release (Start)	Brake Engage (Stop)	Power Source
10	Standard	Standard (AC Switching)	Motor terminals
15	Standard	Fast (DC Switching)	Motor terminals
20	Standard	Standard (AC Switching)	Separate power
25	Standard	Fast (DC switching)	Separate power

GUE Rectifier Dimensions

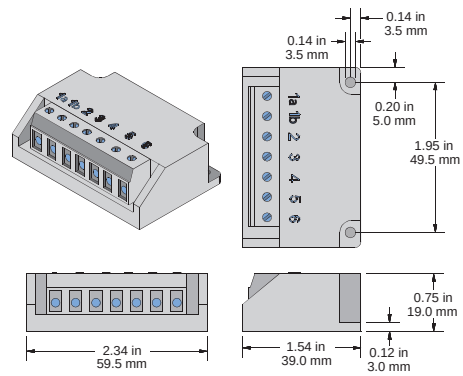

Basic Connection

The GUE brake system can be connected for standard (AC switching) or fast stopping (DC switching).

Standard Stopping
AC switching

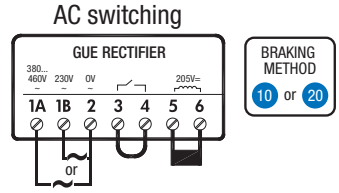

1 & 2	3 & 4	5 & 6
AC Brake Voltage	Jumper	DC Brake

Fast Stopping
DC switching

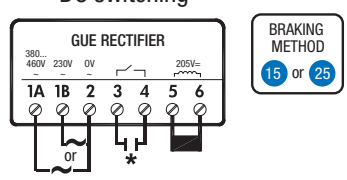

1 & 2	3 & 4	5 & 6
AC Brake Voltage	Normally Open Contact	DC Brake

* The normally open contact/s (NO) is not supplied by NORD. It must close at the same time power is supplied to the brake. The contact must be capable of switching inductive loads and/or be rated at IEC AC3.

Send Quote Requests to info@automatedpt.com
Call +1(800)985-6929 To Order or Order Online At Nordgearmotors.com

Push-Hybrid Rectifiers External DC Switching (GPE)

Push-Hybrid Rectifiers - External DC Switching (GPE)

Like the standard NORD brake control rectifiers, NORD's fast-acting brake control rectifiers convert AC voltage to DC voltage. They are utilized to improve brake performance and are often recommended in order to provide shorter brake release times or to provide faster stopping times.

All of the fast-acting rectifiers are a two-stage "push" design. When power is first applied, these rectifiers operate like a full-wave rectifier and then after a relatively short period of time, they act like a half-wave rectifier. GPE type rectifiers start out in full-wave mode when power is first applied and then after approximately 250ms they act like half-wave rectifiers.

GPE rectifiers were designed for external control of the brake's DC switching. They are primarily used in across-the-line applications where the brake power is supplied by the motor terminals and may also be used in situations where the brake power is supplied separate from the motor.

There are two ways to apply the fast-acting rectifiers:

- **Overexcitation -** provides fast brake release. The brake coil is selected as a half-wave system (45% of the AC supply voltage).
- **Reduced power holding -** provides very fast brake stopping. The brake coil is selected like a full-wave system (90% of the AC supply voltage).

If the motor is connected to a variable frequency drive, soft start, or is a two-speed motor, the AC power must be supplied to the brake rectifier separately from the motor power.

Ratings & Part Numbers

Model Type	GPE20L	GPE40L
Part Number	19140230	19140240
Protection (Electronics)	Coated	Coated
Color	Black	
Input Voltage (V_{AC})	200V – 275V	380V – 480V
Output Voltage (V_{DC})	(V_{DC} =0.45 x V_{AC}) - Half-Wave (V_{DC} =0.90 x V_{AC}) - Full-Wave	
Rated Current @ 40°C	0.7 A	0.7 A
Rated Current @ 75°C	0.5 A	0.5A
Temperature Range	-20°C to 75°C	
DC Switching via	External contact or IR relay	

Braking Method

Braking Method	Break Release (Start)	Brake Engage (Stop)	Power Source
40	Standard	Very fast (Reduced power holding)	Motor terminals
30	Fast (overexcitation)	Standard (AC switching)	Motor terminals
35	Fast (overexcitation)	Fast (DC switching)	Motor terminals

GPE Rectifier Dimensions

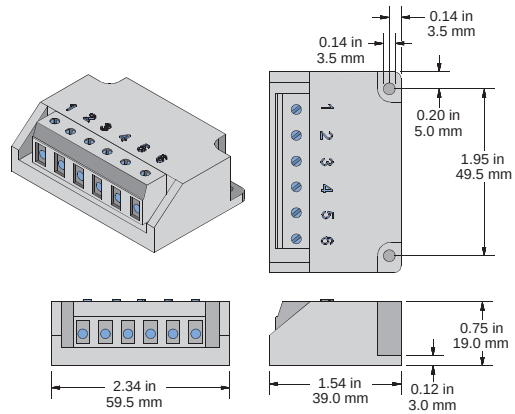

Basic Connection

The GPE brake system can be connected for standard (AC switching), fast (DC switching), and very fast stopping (reduced power holding and DC switching). Fast brake release can also be achieved by selecting a different brake coil combination.

Standard Stopping
AC switching

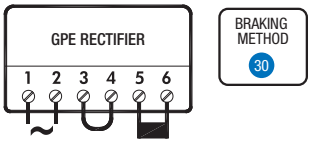

1 & 2	3 & 4	5 & 6
AC Brake Voltage	Jumper	DC Brake

Fast Stopping
DC switching

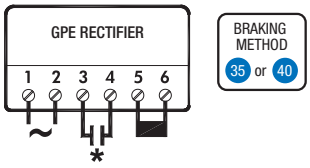

1 & 2	3 & 4	5 & 6
AC Brake Voltage	Normally Open Contact	DC Brake

* The normally open contact/s (NO) is not supplied by NORD. It must close at the same time power is supplied to the brake. The contact must be capable of switching inductive loads and/or be rated at IEC AC3.

Push-Hybrid Rectifiers
Integrated DC Switching (GPU)

Push-Hybrid Rectifiers - Integrated DC Switching (GPU)

Like the standard NORD brake control rectifiers, NORD's fast-acting brake control rectifiers convert AC voltage to DC voltage. They are utilized to improve brake performance and are often recommended in order to provide shorter brake release times or to provide faster stopping times.

All of the fast-acting rectifiers are a two-stage "push" design. When power is first applied, these rectifiers operate like a full-wave rectifier and after a relatively short period of time, act like a half-wave rectifier. GPU type rectifiers start out in full-wave mode when power is first applied and then after approximately 250ms they act like half-wave rectifiers.

GPU rectifiers were designed for integrated control of the brake's DC switching and for voltage sensing. They are primarily used in applications where the brake power is supplied separate from the motor.

There are two ways to apply the fast-acting rectifiers:

- **Overexcitation -** provides fast brake release. The brake coil is selected as a half-wave system (45% of the AC supply voltage).
- **Reduced power holding -** provides very fast brake stopping. The brake coil is selected like a full-wave system (90% of the AC supply voltage).

If the motor is connected to a variable frequency drive, soft start, or is a two-speed motor, the AC power must be supplied to the brake rectifier separately from the motor power.

Ratings & Part Numbers

Model Type	GPU20L	GPU40L
Part Number	19140090	19140170
Protection (Electronics)	Coated	Coated
Color	Black	
Input Voltage (V_{AC})	200V – 275V	380V – 480V
Output Voltage (V_{DC})	(V_{DC} =0.45 x V_{AC}) - Half-Wave (V_{DC} =0.90 x V_{AC}) - Full-Wave	
Rated Current @ 40°C	0.7 A	0.7 A
Rated Current @ 75°C	0.5 A	0.5A
Temperature Range	-20°C to 75°C	
DC Switching via	Internal activation	

Braking Method

Braking Method	Break Release (Start)	Brake Engage (Stop)	Power Source
55	Standard	Very fast (reduced power holding)	Separate power
45	Fast (overexcitation)	Standard (AC switching)	Separate power
50	Fast (overexcitation)	Fast (DC switching)	Separate power

GPU Rectifier Dimensions

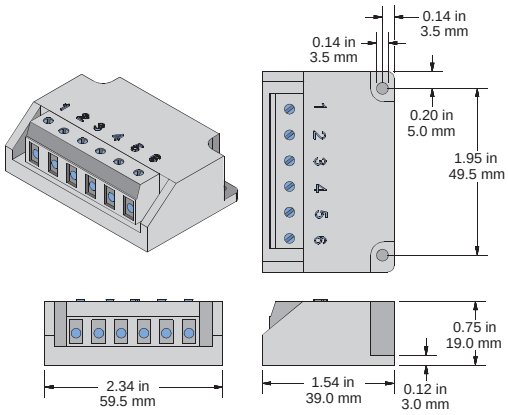

Basic Connection

The GPU brake system can be connected for standard (AC switching), fast (DC switching), and very fast stopping (reduced power holding and DC switching). Fast brake release can also be achieved by selecting a different brake coil combination.

Standard Stopping
AC switching

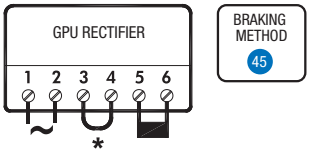

1 & 2	3 & 4	5 & 6
AC Brake Voltage	Jumper	DC Brake

Fast and Very Fast Stopping
DC switching

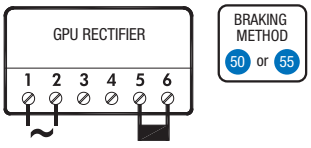

1 & 2	3 & 4	5 & 6
AC Brake Voltage	—	DC Brake

* The normally open contact/s (NO) is not supplied by NORD. It must close at the same time power is supplied to the brake. The contact must be capable of switching inductive loads and/or be rated at IEC AC3.

Push-Hybrid Rectifiers External DC Switching (PMG)

Push-Hybrid Rectifiers - External DC Switching (PMG)

Like the standard NORD brake control rectifiers, NORD's fast-acting brake control rectifiers convert AC voltage to DC voltage. They are utilized to improve brake performance and are often recommended in order to provide shorter brake release times or to provide faster stopping times.

All of the fast-acting rectifiers are a two-stage "push" design. When power is first applied, these rectifiers operate like a full-wave rectifier and after a relatively short period of time, act like a half-wave rectifier. PMG type rectifiers start out in full-wave mode when power is first applied and after approximately 250ms they act like a half-wave rectifiers.

PMG rectifiers were designed for external control of the brake's DC switching. They are primarily used in across-the-line applications where the brake power is supplied by the motor terminals and may also be used in situations where the brake power is supplied separate from the motor.

There are two ways to apply the fast-acting rectifiers:

- **Overexcitation -** provides fast brake release. The brake coil is selected as a half-wave system (45% of the AC supply voltage).
- **Reduced power holding -** provides very fast brake stopping. The brake coil is selected like a full-wave system (90% of the AC supply voltage).

If the motor is connected to a variable frequency drive, soft start, or is a two-speed motor, the AC power must be supplied to the brake rectifier seperately from the motor power.

Ratings & Part Numbers

Model Type	PMG 500
Part Number	19140200
Protection (electronics)	Coated
Color	Black
Input Voltage (V_{AC})	200 – 500V_{AC} +/- 10%
Output Voltage (V_{DC})	(V_{DC} =0.45 x V_{AC}) - Half-Wave (V_{DC} =0.90 x V_{AC}) - Full-Wave
Rated Current @ 40°C	4.0 A
Rated Current @ 75°C	2.8 A
Temperature Range	-15°C to 80°C
DC-Switching via	External contact

Braking Method

Braking Method	Break Release (Start)	Brake Engage (Stop)	Power Source
40	Standard	Very fast (reduced power holding)	Motor terminals
30	Fast (overexcitation)	Standard (AC switching)	Motor terminals
35	Fast (overexcitation)	Fast (DC switching)	Motor terminals
55	Standard	Very fast (reduced power holding)	Separate power
45	Fast (overexcitation)	Standard (AC switching)	Separate power
50	Fast (overexcitation)	Fast (DC switching)	Separate power

PMG Rectifier Dimensions

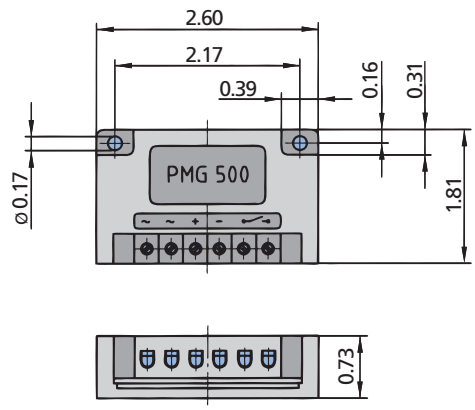

Basic Connection

The PMG brake system can be connected for standard (AC switching), fast (DC switching), and very fast stopping (reduced power holding and DC switching). Fast brake release can also be achieved by selecting a different brake coil combination.

Standard Stopping
AC switching

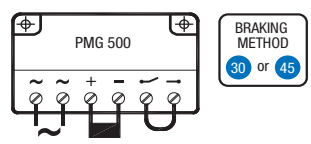

~ & ~	+ & -	⊸ & ⊸
AC Brake Voltage	DC Brake	Jumper

Fast Stopping
DC switching

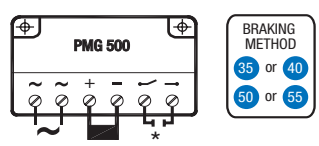

~ & ~	+ & -	⊸ & ⊸
AC Brake Voltage	DC Brake	Normally Open Contact

* The normally open contact/s (NO) is not supplied by NORD. It must close at the same time power is supplied to the brake. The contact must be capable of switching inductive loads and/or be rated at IEC AC3.

Push-Hybrid Rectifiers
External DC Switching (Roba®-Switch)

Push-Hybrid Rectifiers - External DC Switching (Roba®-Switch)

Like the standard NORD brake control rectifiers, NORD's fast-acting brake control rectifiers convert AC voltage to DC voltage. The fast-acting brake rectifiers are utilized to improve brake performance and are often recommended in order to provide shorter brake release times or to provide faster stopping times.

All of the fast-acting rectifiers are a two-stage "push" design, meaning that when power is first applied these rectifiers operate like a full-wave rectifier and then after a relatively short period of time, they act like a half-wave rectifier. Roba®-Switch rectifiers start out in full-wave mode when power is first applied and after approximately 1.5s they act like a half-wave rectifiers.

Roba®-Switch rectifiers were designed for external control of the brake's DC switching. They are primarily used in across-the-line applications where the brake power is supplied by the motor terminals and may also be used in situations where the brake power is supplied separate from the motor.

There are two ways to apply the fast-acting rectifiers:

- **Overexcitation -** provides fast brake release. The brake coil is selected as a half-wave system (45% of the AC supply voltage).
- **Reduced power holding -** provides very fast brake stopping. The brake coil is selected like a full-wave system (90% of the AC supply voltage).

If the motor is connected to a variable frequency drive, soft start, or is a two-speed motor, the AC power must be supplied to the brake rectifier seperately from the motor power.

Ratings & Part Numbers

Model Type	Roba®-Switch 017.100.2
Part Number	19140930
Protection (electronics)	Coated
Color	Black
Input Voltage (V_{AC})	200 – 500V_{AC} +/- 10%
Output Voltage (V_{DC})	(V_{DC} =0.45 x V_{AC}) - Half-Wave (V_{DC} =0.90 x V_{AC}) - Full-Wave
Rated Current @ 40°C	2.0 A
Rated Current @ 75°C	1.0 A
Temperature Range	-25°C to 70°C
DC-Switching via	External contact

Braking Method

Braking Method	Break Release (Start)	Brake Engage (Stop)	Power Source
40	Standard	Very fast (reduced power holding)	Motor terminals
30	Fast (overexcitation)	Standard (AC switching)	Motor terminals
35	Fast (overexcitation)	Fast (DC switching)	Motor terminals
55	Standard	Very fast (reduced power holding)	Separate power
45	Fast (overexcitation)	Standard (AC switching)	Separate power
50	Fast (overexcitation)	Fast (DC switching)	Separate power

Mayr Roba®-Switch Rectifier Dimensions

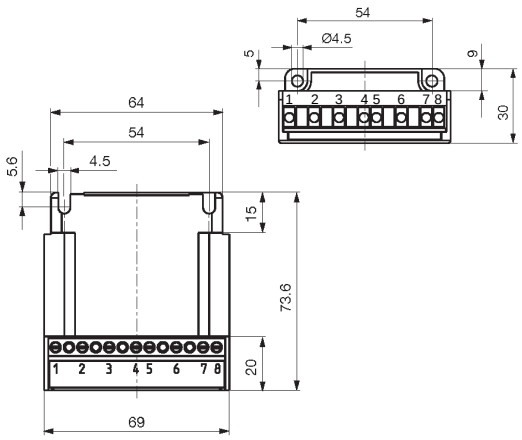

Basic Connection

The Roba®-Switch brake system can be connected for standard (AC switching), fast (DC switching), and very fast stopping (reduced power holding and DC switching). Fast brake release can also be achieved by selecting a different brake coil combination.

Standard Stopping AC switching

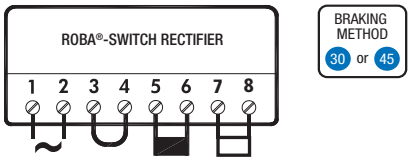

1 & 2	3 & 4	5 & 6	7 & 8
AC Brake Voltage	Jumper	DC Brake	Timing Resistor

Fast Stopping DC switching

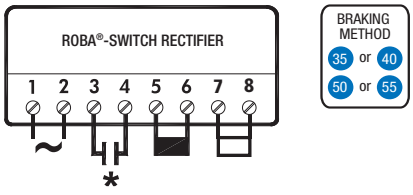

1 & 2	3 & 4	5 & 6	7 & 8
AC Brake Voltage	Normally Open Contact*	DC Brake	Timing Resistor

* The normally open contact/s (NO) is not supplied by NORD. It must close at the same time power is supplied to the brake. The contact must be capable of switching inductive loads and/or be rated at IEC AC3.

Send Quote Requests to info@automatedpt.com
Call +1(800)985-6929 To Order or Order Online At Nordgearmotors.com

Brake Performance Data

Brake Size		BRE5	BRE10	BRE20	BRE40	BRE60	BRE100	BRE150
Brake torque $_{max}$	[lb-ft]	3.7	7.4	15	30	44	74	110
	[lb-in]	44	89	177	354	531	885	1330
	[Nm]	5	10	20	40	60	100	150
Power coil P_{20}	[W]	22	28	39	42	50	75	76
Nominal air gap	[in]	0.008	0.008	0.008	0.012	0.012	0.016	0.020
	[mm]	0.2	0.2	0.2	0.3	0.3	0.4	0.5
Maximum air gap (readjust) [a]max	[in]	0.024	0.028	0.031	0.035	0.039	0.043	0.043
	[mm]	0.6	0.7	0.8	0.9	1.0	1.1	1.1
Max brake pad wear - must be replaced	[in]	0.118	0.118	0.111	0.118	0.138	0.138	0.138
	[mm]	3	3	2.8	3	3.5	3.5	3.5
Minimum brake pad thickness	[in]	0.177	0.217	0.295	0.374	0.453	0.492	0.571
	[mm]	4.5	5.5	7.5	9.5	11.5	12.5	14.5
Max work per cycle W_{rmax}	[J x 10^3]	3	6	12	25	35	50	75
	[lb-ft x 10^3]	2.2	4.4	8.9	18.4	25.8	36.9	55.3
Work until readjust W_{rn}	[J x 10^7]	5	12	20	35	60	125	200
	[lb-ft x 10^7]	3.7	8.9	14.8	25.8	44.3	92.2	147.5
Heat load per cycle	[J/s]	80	100	130	160	200	250	300
	[lb-ft/s]	59.0	73.8	95.9	118.0	147.5	184.4	221.3
Release time (start) t_1	[ms]	35	45	70	80	120	160	200
Release time (start) $t_{1\text{-}OE}$	[ms]	15	15	28	28	75	110	110
Setting time (stop) $t_{2\text{-}AC}$	[ms]	70	95	140	175	210	280	350
Setting time (stop) $t_{2\text{-}DC}$	[ms]	30	45	30	75	90	120	150
Setting time (stop) $t_{2\text{-}DCRP}$	[ms]	5	6	11	12	12	13	17
IR relay delay (stop) $t_{2\text{-}IR}$	[ms]	18	18	18	18	18	18	18
Current - 250VDC coil	[A]	0.09	0.11	0.14	0.18	0.19	0.31	0.31
Current - 225VDC coil	[A]	0.09	0.13	0.18	0.20	0.22	0.35	0.36
Current - 205VDC coil	[A]	0.11	0.13	0.15	0.24	0.28	0.44	0.45
Current - 180VDC coil	[A]	0.12	0.16	0.19	0.25	0.30	0.46	0.47
Current - 105VDC coil	[A]	0.21	0.32	0.39	0.46	0.60	0.88	0.89
Current - 24VDC coil	[A]	0.92	1.17	1.42	1.75	2.08	3.10	3.20

Set (Stop) Times	
$t_{2\text{-}AC}$	Brake set time - AC switching
$t_{2\text{-}DC}$	Brake set time - DC switching
$t_{2\text{-}DCRP}$	Brake set time - DC switching reduced power
$t_{2\text{-}IR}$	Additional brake stopping of the IR relay

Release Times	
t_1	Brake release time - Standard
$t_{1\text{-}OE}$	Brake release time - Overexcitation (GP)

An increased air gap will alter braking times.

Send Quote Requests to info@automatedpt.com
Call +1(800)985-6929 To Order or Order Online At Nordgearmotors.com

Brake Calculations

Brake Size Calculation

The torques and inertias below are based on the motor speed. Load side torques must always be divided by the gear reduction ratio. Inertias must be divided by the square of the gear ratio. You must also consider any external reduction ratio outside the gearbox.

Selection for Holding Loads (Static)

$$T_{req} = T_{stat} = T_{load} \times K$$

Selection for Stopping Loads (Static + Dynamic)

$$\sum J = J_{motor} + \frac{J_{load}}{i^2}$$

Typically other inertias, like the gearbox, can be ignored.

$$T_{dyn} = \frac{\sum J \times n}{25.7 \times t}$$

$$T_{req} = (T_{dyn} + T_{load}) \times K$$

For driving loads use: $-T_{load}$
For overhauling loads use: $+T_{load}$

Brake Work Verification

$$W = \frac{\sum J \times n^2}{5880} \times \frac{T_B}{T_B \pm T_{load}} \Longrightarrow W \leq W_{max}$$

For driving loads use: $+T_{load}$
For overhauling loads use: $-T_{load}$

The permissible values for W_{max} (friction work) depend on the stopping frequency. See diagram at right.

In applications where the brake is operated frequently, two brake work values should be evaluated to ensure adequate brake life — the braking work compared to the braking frequency and the maximum work limit for a single operation, such as an E-stop. Reviewing these two values will help determine the optimal solution and ensure long brake life.

Abbreviation Key

c/h	Number of brakes per hour
J [lb-ft^2]	Inertia
J_{motor} [lb-ft^2]	Motor inertia
i	System reduction ratio
K	Safety factors based on application and according to industry rules and practices Hoisting >2 Hoisting with people >2..3 Travel drives 0.5 to 1.5
T_B [lb-in]	Brake torque
T_{dyn} [lb-in]	Dynamic torque
T_{req} [lb-in]	Required brake torque
T_{load} [lb-in]	Load torque
T_{stat} [lb-in]	Static torque
n [rpm]	Motor speed
t_r [sec]	Stopping time
W [lb-ft]	Brake work
W_{max} [lb-ft]	Maximum brake work for one brake operation

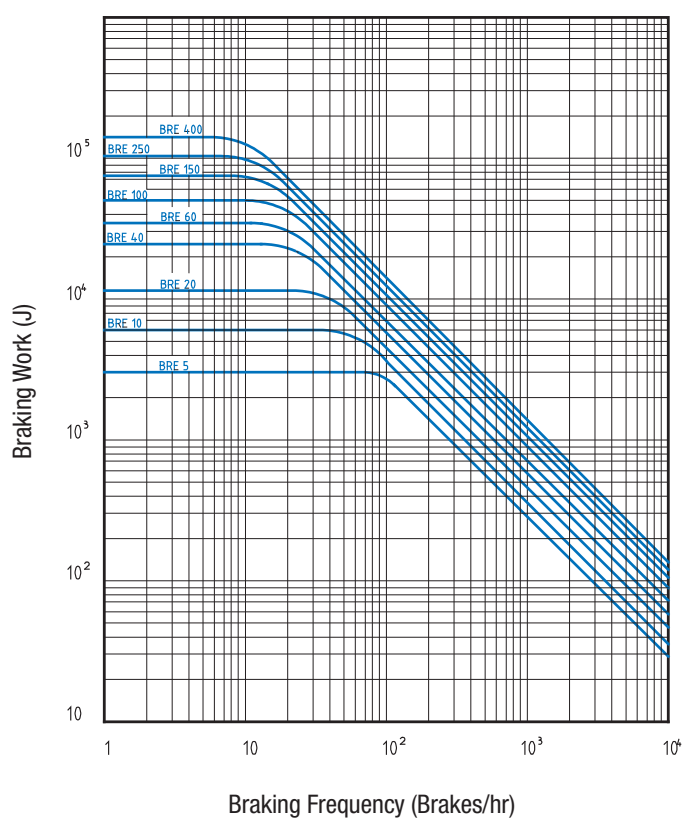

Send Quote Requests to info@automatedpt.com
Call +1(800)985-6929 To Order or Order Online At Nordgearmotors.com

Connections
GHE and GVE Rectifiers

BR101A

POWERED FROM MOTOR TERMINAL BLOCK
STANDARD RELEASE
NORMAL STOPPING (AC-SWITCHING)

10

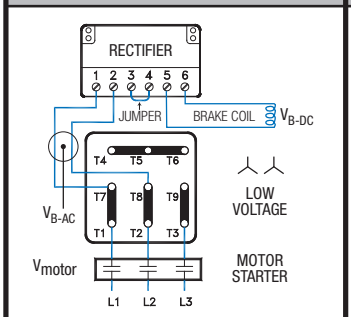

MOTOR	RECTIFIER	V_{motor}	V_{B-AC}	V_{B-DC}
208-230YY/460Y	GVE20	208 VAC	208-230 VAC	205 VDC
230YY/460Y	GVE20	230 VAC	230 VAC	205 VDC
230YY/460Y	GHE40	230 VAC	230 VAC	105 VDC

BR101B

POWERED FROM MOTOR TERMINAL BLOCK
STANDARD RELEASE
NORMAL STOPPING (AC-SWITCHING)

10

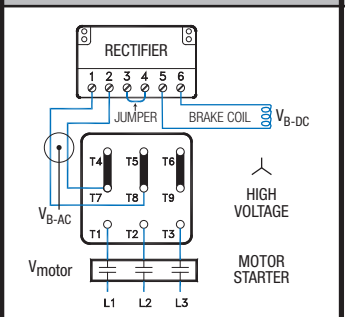

MOTOR	RECTIFIER	V_{motor}	V_{B-AC}	V_{B-DC}
230YY/460Y	GVE20	460 VAC	230 VAC	205 VDC
230YY/460Y	GHE40	460 VAC	230 VAC	105 VDC

BR101C

POWERED FROM MOTOR TERMINAL BLOCK
STANDARD RELEASE
NORMAL STOPPING (AC-SWITCHING)

10

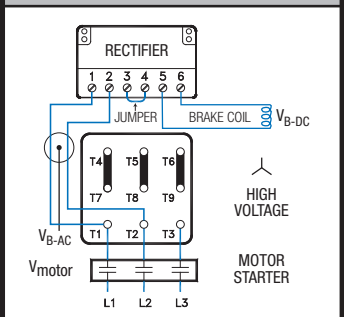

MOTOR	RECTIFIER	V_{motor}	V_{B-AC}	V_{B-DC}
230YY/460Y	GHE40	460 VAC	460 VAC	205 VDC

BR601A

POWERED FROM MOTOR TERMINAL BLOCK
STANDARD RELEASE
NORMAL STOPPING (AC-SWITCHING)

10

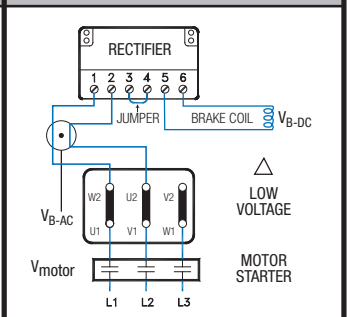

MOTOR	RECTIFIER	V_{motor}	V_{B-AC}	V_{B-DC}
208Δ/360Y	GVE20	208 VAC	208 VAC	180 VDC
230Δ/400Y	GVE20	230 VAC	230 VAC	205 VDC
400Δ/690Y	GHE40	400 VAC	400 VAC	180 VDC
460Δ/Y	GHE40	460 VAC	460 VAC	205 VDC

BR601B

POWERED FROM MOTOR TERMINAL BLOCK
STANDARD RELEASE
NORMAL STOPPING (AC-SWITCHING)

10

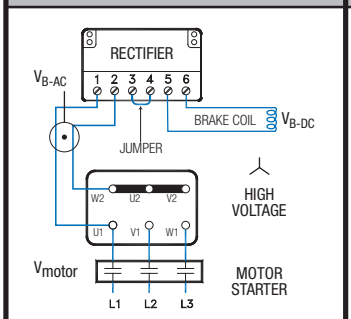

MOTOR	RECTIFIER	V_{motor}	V_{B-AC}	V_{B-DC}
230Δ/400Y	GVE20	400 VAC	230 VAC	205 VDC

BR601C

POWERED FROM MOTOR TERMINAL BLOCK
STANDARD RELEASE
NORMAL STOPPING (AC-SWITCHING)

10

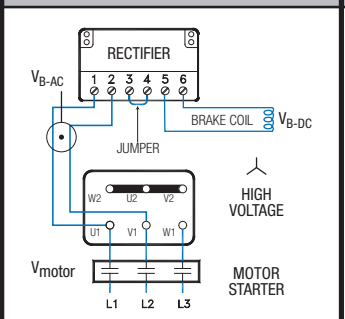

MOTOR	RECTIFIER	V_{motor}	V_{B-AC}	V_{B-DC}
230Δ/400Y	GHE40	400 VAC	400 VAC	180 VDC
332Δ/575Y	GHE50	575 VAC	575 VAC	250 VDC

BR603A

POWERED FROM MOTOR TERMINAL BLOCK
STANDARD RELEASE
FAST STOPPING (DC-SWITCHING)

15

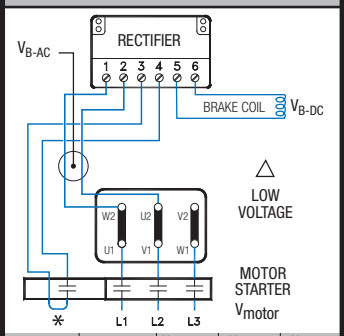

MOTOR	RECTIFIER	V_{motor}	V_{B-AC}	V_{B-DC}
208Δ/360Y	GVE20	208 VAC	208 VAC	180 VDC
230Δ/400Y	GVE20	230 VAC	230 VAC	205 VDC
400Δ/690Y	GHE40	400 VAC	400 VAC	180 VDC
460Δ/Y	GHE40	460 VAC	460 VAC	205 VDC

BR603B

POWERED FROM MOTOR TERMINAL BLOCK
STANDARD RELEASE
FAST STOPPING (DC-SWITCHING)

15

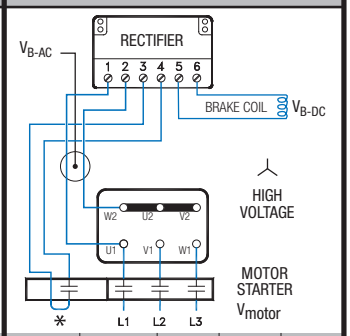

MOTOR	RECTIFIER	V_{motor}	V_{B-AC}	V_{B-DC}
230Δ/400Y	GVE20	400 VAC	230 VAC	105 VDC

BR603C

POWERED FROM MOTOR TERMINAL BLOCK
STANDARD RELEASE
FAST STOPPING (DC-SWITCHING)

15

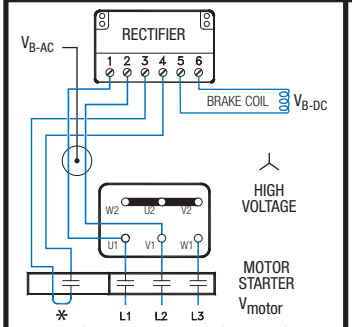

MOTOR	RECTIFIER	V_{motor}	V_{B-AC}	V_{B-DC}
230Δ/400Y	GHE40	400 VAC	400 VAC	180 VDC
332Δ/575Y	GHE50	575 VAC	575 VAC	250 VDC

BR103A

POWERED FROM MOTOR TERMINAL BLOCK
STANDARD RELEASE
FAST STOPPING (DC-SWITCHING)

15

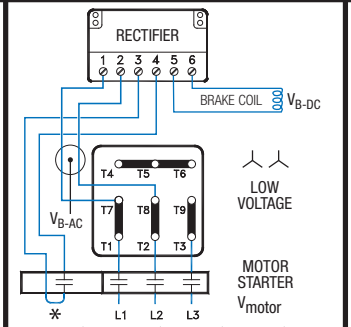

MOTOR	RECTIFIER	V_{motor}	V_{B-AC}	V_{B-DC}
208-230YY/460Y	GVE20	208 VAC	208-230 VAC	205 VDC
230YY/460Y	GVE20	230 VAC	230 VAC	205 VDC
230YY/460Y	GHE40	230 VAC	230 VAC	105 VDC

BR103B

POWERED FROM MOTOR TERMINAL BLOCK
STANDARD RELEASE
FAST STOPPING (DC-SWITCHING)

15

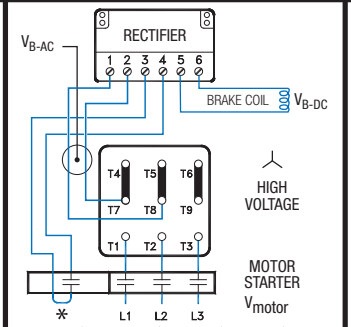

MOTOR	RECTIFIER	V_{motor}	V_{B-AC}	V_{B-DC}
230YY/460Y	GVE20	460 VAC	230 VAC	205 VDC

BR103C

POWERED FROM MOTOR TERMINAL BLOCK
STANDARD RELEASE
FAST STOPPING (DC-SWITCHING)

15

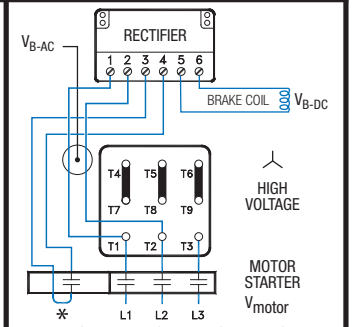

MOTOR	RECTIFIER	V_{motor}	V_{B-AC}	V_{B-DC}
230YY/460Y	GHE40	460 VAC	460 VAC	205 VDC

* The normally open contact/s (NO) is not supplied by NORD. It must close at the same time power is supplied to the brake. The contact must be capable of switching inductive loads and/or be rated IEC AC3.

– Braking method

NORD DRIVESYSTEMS

BR102A

20

SEPERATE POWER SOURCE
STANDARD RELEASE
NORMAL STOPPING (AC-SWITCHING)

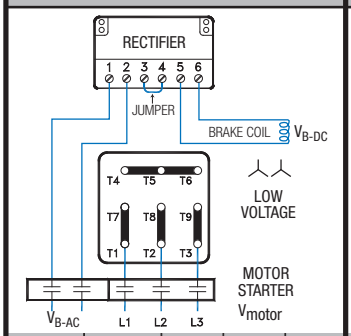

MOTOR	RECTIFIER	V_{motor}	V_{B-AC}	V_{B-DC}
208-230Y/460Y	GVE20	208 VAC	208-230 VAC	205 VDC
230YY/460Y	GVE20	230 VAC	115 VAC	105 VDC
230YY/460Y	GVE20	230 VAC	230 VAC	205 VDC
230YY/460Y	GHE40	230 VAC	230 VAC	105 VDC

BR102B

20

SEPERATE POWER SOURCE
STANDARD RELEASE
NORMAL STOPPING (AC-SWITCHING)

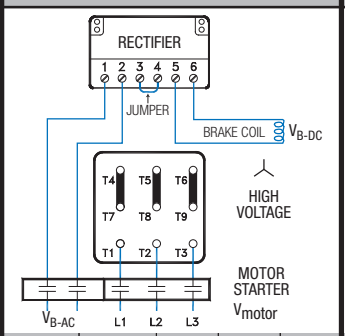

MOTOR	RECTIFIER	V_{motor}	V_{B-AC}	V_{B-DC}
230YY/460Y	GVE20	460 VAC	115 VAC	105 VDC
230YY/460Y	GVE20	460 VAC	230 VAC	205 VDC
230YY/460Y	GHE40	460 VAC	460 VAC	205 VDC

BR602A

20

SEPERATE POWER SOURCE
STANDARD RELEASE
NORMAL STOPPING (AC-SWITCHING)

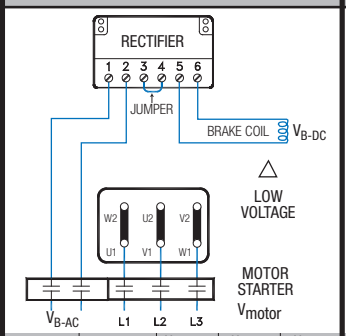

MOTOR	RECTIFIER	V_{motor}	V_{B-AC}	V_{B-DC}
208Δ/360Y	GVE20	208 VAC	208 VAC	180 VDC
230Δ/400Y	GVE20	230 VAC	230 VAC	205 VDC
400Δ/690Y	GHE40	400 VAC	400 VAC	180 VDC
460Δ/Y	GHE40	460 VAC	460 VAC	205 VDC

BR602B

20

SEPERATE POWER SOURCE
STANDARD RELEASE
NORMAL STOPPING (AC-SWITCHING)

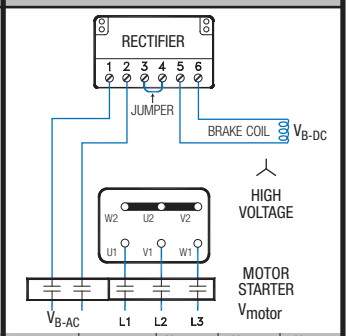

MOTOR	RECTIFIER	V_{motor}	V_{B-AC}	V_{B-DC}
230Δ/400Y	GHE40	400VAC	230 VAC	105 VDC
230Δ/400Y	GHE20	400VAC	230 VAC	205 VDC
230Δ/400Y	GHE40	400 VAC	400 VAC	180 VDC
332Δ/575Y	GHE50	575 VAC	575 VAC	250 VDC

BR104A

25

SEPERATE POWER SOURCE
STANDARD RELEASE
FAST STOPPING (DC-SWITCHING)

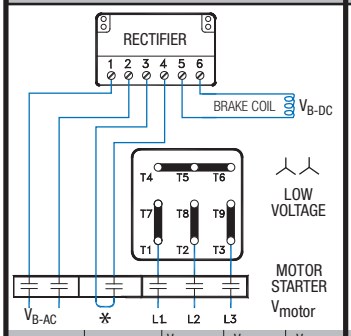

MOTOR	RECTIFIER	V_{motor}	V_{B-AC}	V_{B-DC}
208-230Y/460Y	GVE20	208 VAC	208-230 VAC	205 VDC
230YY/460Y	GVE20	230 VAC	115 VAC	105 VDC
230YY/460Y	GVE20	230 VAC	230 VAC	205 VDC
230YY/460Y	GHE40	230 VAC	230 VAC	105 VDC

BR104B

25

SEPERATE POWER SOURCE
STANDARD RELEASE
FAST STOPPING (DC-SWITCHING)

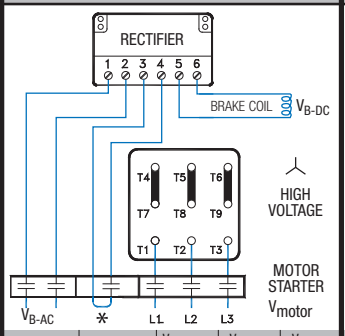

MOTOR	RECTIFIER	V_{motor}	V_{B-AC}	V_{B-DC}
230YY/460Y	GVE20	460 VAC	115 VAC	105 VDC
230YY/460Y	GVE20	460 VAC	230 VAC	205 VDC
230YY/460Y	GHE40	460 VAC	460 VAC	205 VDC

BR604A

25

SEPERATE POWER SOURCE
STANDARD RELEASE
FAST STOPPING (DC-SWITCHING)

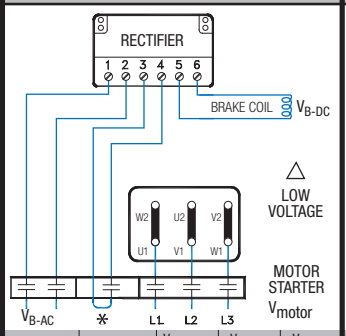

MOTOR	RECTIFIER	V_{motor}	V_{B-AC}	V_{B-DC}
208Δ/360Y	GHE20	208 VAC	208 VAC	105 VDC
230Δ/400Y	GHE20	230 VAC	230 VAC	105 VDC
400Δ/690Y	GHE40	400 VAC	400 VAC	180 VDC
460Δ/Y	GHE40	460 VAC	460 VAC	205 VDC

BR604B

25

SEPERATE POWER SOURCE
STANDARD RELEASE
FAST STOPPING (DC-SWITCHING)

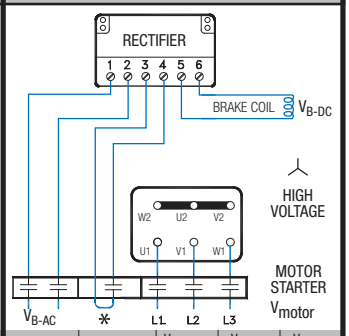

MOTOR	RECTIFIER	V_{motor}	V_{B-AC}	V_{B-DC}
230Δ/400Y	GHE40	400VAC	230 VAC	105 VDC
230Δ/400Y	GHE20	400VAC	230 VAC	205 VDC
230Δ/400Y	GHE40	400 VAC	400 VAC	180 VDC
332Δ/575Y	GHE50	575 VAC	575 VAC	250 VDC

* The normally open contact/s (NO) is not supplied by NORD. It must close at the same time power is supplied to the brake. The contact must be capable of switching inductive loads and/or be rated IEC AC3.

– Braking method

Connections
GUE Rectifiers

GU101A

POWERED FROM MOTOR TERMINAL BLOCK
STANDARD RELEASE
STANDARD STOPPING (AC-SWITCHING)

10

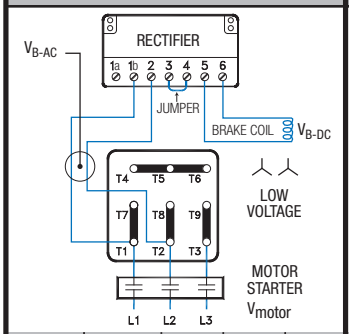

MOTOR	RECTIFIER	Vmotor	VB-AC	VB-DC
208-230Y/460Y	GUE40V	208 VAC	208-230 VAC	205 VDC
230YY/460Y	GUE40V	230 VAC	230 VAC	205 VDC

GU101B

POWERED FROM MOTOR TERMINAL BLOCK
STANDARD RELEASE
STANDARD STOPPING (AC-SWITCHING)

10

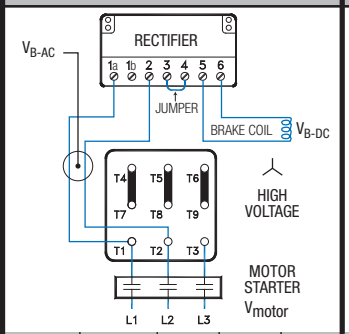

MOTOR	RECTIFIER	Vmotor	VB-AC	VB-DC
208-230Y/460Y	GUE40V	460 VAC	460 VAC	205 VDC
230YY/460Y	GUE40V	460 VAC	460 VAC	205 VDC

GU101D

POWERED FROM MOTOR TERMINAL BLOCK
STANDARD RELEASE
STANDARD STOPPING (AC-SWITCHING)

10

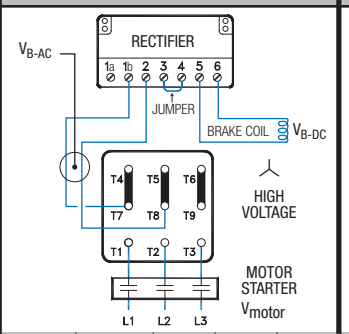

MOTOR	RECTIFIER	Vmotor	VB-AC	VB-DC
230YY/460Y	GUE40V	460 VAC	230 VAC	205 VDC

GU101E

POWERED FROM MOTOR TERMINAL BLOCK
STANDARD RELEASE
NORMAL STOPPING (AC-SWITCHING)

10

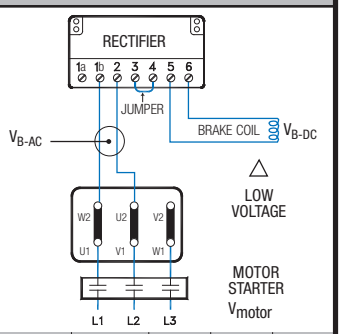

MOTOR	RECTIFIER	Vmotor	VB-AC	VB-DC
230Δ/400Y	GUE40V	230 VAC	230 VAC	205 VDC
400Δ/690Y	GUE40V	400 VAC	400 VAC	180 VDC

GU101F

POWERED FROM MOTOR TERMINAL BLOCK
STANDARD RELEASE
NORMAL STOPPING (AC-SWITCHING)

10

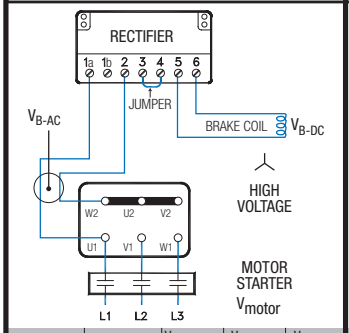

MOTOR	RECTIFIER	Vmotor	VB-AC	VB-DC
230 /400Y	GUE40V	400 VAC	400 VAC	180 VDC

GU103A

POWERED FROM MOTOR TERMINAL BLOCK
STANDARD RELEASE
FAST STOPPING (DC-SWITCHING)

15

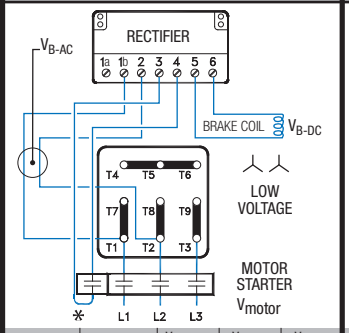

MOTOR	RECTIFIER	Vmotor	VB-AC	VB-DC
208-230Y/460Y	GUE40V	208 VAC	208-230 VAC	205 VDC
230YY/460Y	GUE40V	230 VAC	230 VAC	205 VDC

GU103B

POWERED FROM MOTOR TERMINAL BLOCK
STANDARD RELEASE
FAST STOPPING (DC-SWITCHING)

15

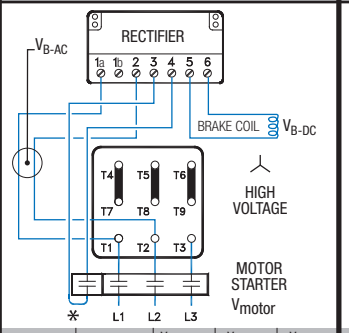

MOTOR	RECTIFIER	Vmotor	VB-AC	VB-DC
208-230Y/460Y	GUE40V	460 VAC	460 VAC	205 VDC
230YY/460Y	GUE40V	460 VAC	460 VAC	205 VDC

GU103D

POWERED FROM MOTOR TERMINAL BLOCK
STANDARD RELEASE
FAST STOPPING (DC-SWITCHING)

15

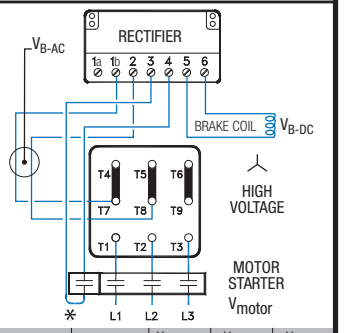

MOTOR	RECTIFIER	Vmotor	VB-AC	VB-DC
230YY/460Y	GUE40V	460 VAC	230 VAC	205 VDC

GU103E

POWERED FROM MOTOR TERMINAL BLOCK
STANDARD RELEASE
FAST STOPPING (DC-SWITCHING)

15

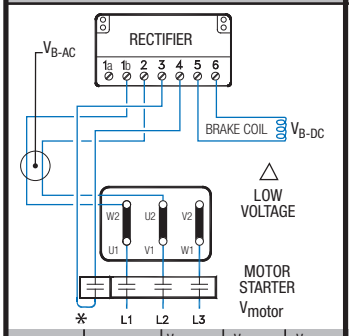

MOTOR	RECTIFIER	Vmotor	VB-AC	VB-DC
230Δ/400Y	GUE40V	230 VAC	230 VAC	205 VDC
400Δ/690Y	GUE40V	400 VAC	400 VAC	180 VDC

GU103F

POWERED FROM MOTOR TERMINAL BLOCK
STANDARD RELEASE
FAST STOPPING (DC-SWITCHING)

15

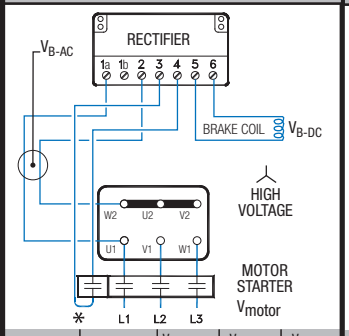

MOTOR	RECTIFIER	Vmotor	VB-AC	VB-DC
230Δ/400Y	GUE40V	400 VAC	400 VAC	180 VDC

GU102A

SEPERATE POWER SOURCE
STANDARD RELEASE
STANDARD STOPPING (AC-SWITCHING)

20

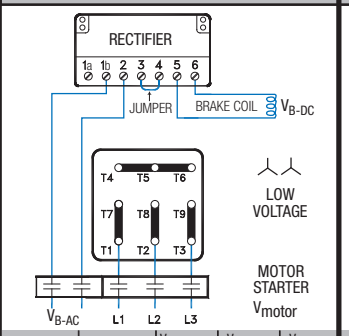

MOTOR	RECTIFIER	Vmotor	VB-AC	VB-DC
208-230Y/460Y	GUE40V	208 VAC	208-230 VAC	205 VDC
230YY/460Y	GUE40V	230 VAC	230 VAC	205 VDC
208-230Y/460Y	GUE40V	208 VAC	115 VAC	105 VDC
230YY/460Y	GUE40V	230 VAC	115 VAC	105 VDC

GU102B

SEPERATE POWER SOURCE
STANDARD RELEASE
STANDARD STOPPING (AC-SWITCHING)

20

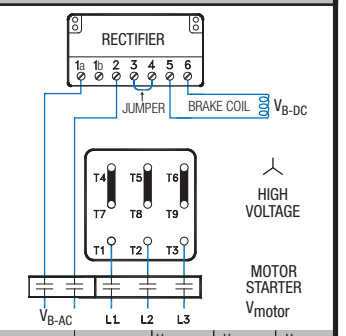

MOTOR	RECTIFIER	Vmotor	VB-AC	VB-DC
208-230Y/460Y	GUE40V	460 VAC	460 VAC	205 VDC
230YY/460Y	GUE40V	460 VAC	460 VAC	205 VDC

* The normally open contact/s (NO) is not supplied by NORD. It must close at the same time power is supplied to the brake. The contact must be capable of switching inductive loads and/or be rated IEC AC3.

– Braking method

Send Quote Requests to info@automatedpt.com
Call +1(800)985-6929 To Order or Order Online At Nordgearmotors.com

Connections
GPE Rectifiers

NORD DRIVESYSTEMS

GP101A

POWERED FROM MOTOR TERMINAL BLOCK
FAST-RELEASE (OVER EXCITATION)
NORMAL STOPPING (AC-SWITCHING)

30

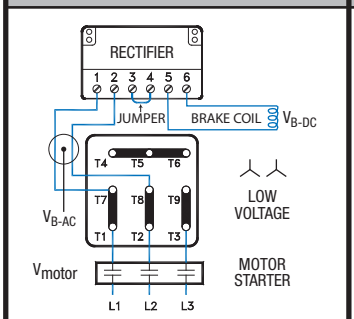

MOTOR	RECTIFIER	Vmotor	VB-AC	VB-DC
230YY/460Y	GPE20L	230 VAC	230 VAC	105 VDC

GP101B

POWERED FROM MOTOR TERMINAL BLOCK
FAST-RELEASE (OVER EXCITATION)
NORMAL STOPPING (AC-SWITCHING)

30

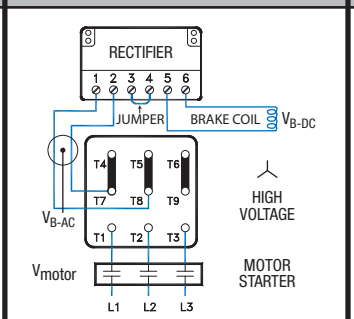

MOTOR	RECTIFIER	Vmotor	VB-AC	VB-DC
230YY/460Y	GPE20L	460 VAC	230 VAC	105 VDC

GP101C

POWERED FROM MOTOR TERMINAL BLOCK
FAST-RELEASE (OVER EXCITATION)
NORMAL STOPPING (AC-SWITCHING)

30

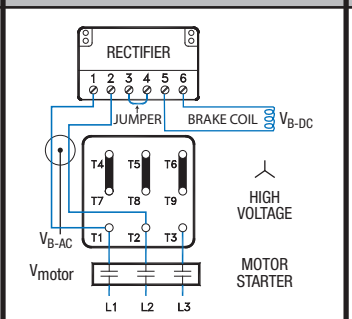

MOTOR	RECTIFIER	Vmotor	VB-AC	VB-DC
230YY/460Y	GPE40L	460 VAC	460 VAC	205 VDC

GP101D

POWERED FROM MOTOR TERMINAL BLOCK
FAST-RELEASE (OVER EXCITATION)
NORMAL STOPPING (AC-SWITCHING)

30

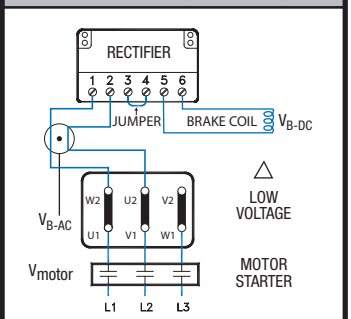

MOTOR	RECTIFIER	Vmotor	VB-AC	VB-DC
208Δ/360Y	GPE20L	208 VAC	208 VAC	105 VDC
230Δ/400Y	GPE20L	230 VAC	230 VAC	105 VDC
400Δ/690Y	GPE40L	400 VAC	400 VAC	180 VDC
460Δ/Y	GPE40L	460 VAC	460 VAC	205 VDC

GP101E

POWERED FROM MOTOR TERMINAL BLOCK
FAST-RELEASE (OVER EXCITATION)
NORMAL STOPPING (AC-SWITCHING)

30

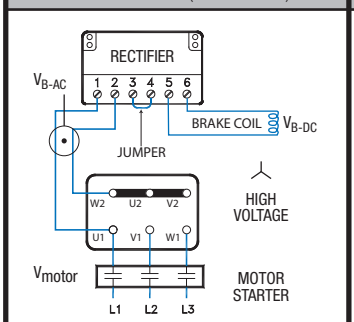

MOTOR	RECTIFIER	Vmotor	VB-AC	VB-DC
230Δ/400Y	GPE20L	400 VAC	230 VAC	105 VDC
332Δ/575Y	GPE40L	575 VAC	332 VAC	180 VDC

GP102A

POWERED FROM MOTOR TERMINAL BLOCK
FAST-RELEASE (OVER EXCITATION)
FAST STOPPING (DC-SWITCHING)

35

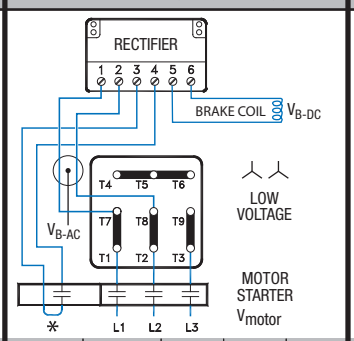

MOTOR	RECTIFIER	Vmotor	VB-AC	VB-DC
230YY/460Y	GPE20L	230 VAC	230 VAC	105 VDC

GP102B

POWERED FROM MOTOR TERMINAL BLOCK
FAST-RELEASE (OVER EXCITATION)
FAST STOPPING (DC-SWITCHING)

35

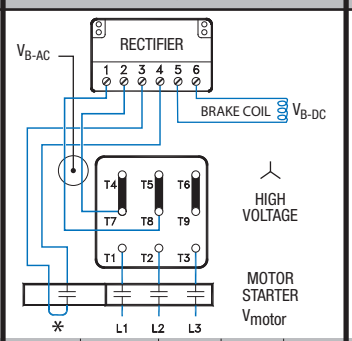

MOTOR	RECTIFIER	Vmotor	VB-AC	VB-DC
230YY/460Y	GPE20L	460 VAC	230 VAC	105 VDC

GP102C

POWERED FROM MOTOR TERMINAL BLOCK
FAST-RELEASE (OVER EXCITATION)
FAST TOPPING (DC-SWITCHING)

35

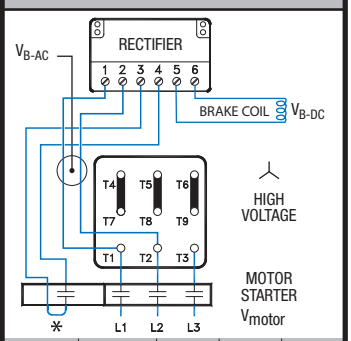

MOTOR	RECTIFIER	Vmotor	VB-AC	VB-DC
230YY/460Y	GPE40L	460 VAC	460 VAC	205 VDC

GP102D

POWERED FROM MOTOR TERMINAL BLOCK
FAST-RELEASE (OVER EXCITATION)
FAST STOPPING (DC-SWITCHING)

35

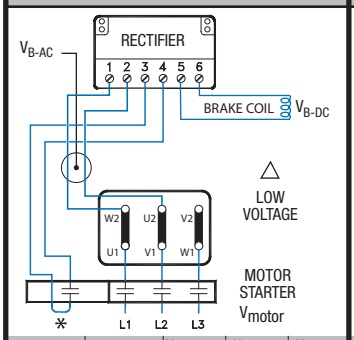

MOTOR	RECTIFIER	Vmotor	VB-AC	VB-DC
208Δ/360Y	GPE20L	208 VAC	208 VAC	105 VDC
230Δ/400Y	GPE20L	230 VAC	230 VAC	105 VDC
400Δ/690Y	GPE40L	400 VAC	400 VAC	180 VDC
460Δ/Y	GPE40L	460 VAC	460 VAC	205 VDC

GP102E

POWERED FROM MOTOR TERMINAL BLOCK
FAST-RELEASE (OVER EXCITATION)
FAST STOPPING (DC-SWITCHING)

35

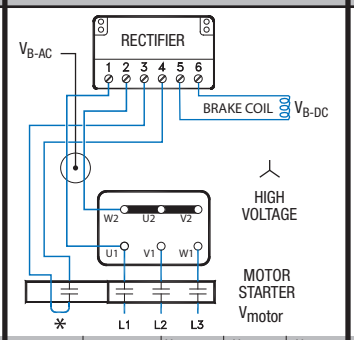

MOTOR	RECTIFIER	Vmotor	VB-AC	VB-DC
230Δ/400Y	GPE20L	400 VAC	230 VAC	105 VDC
332Δ/575Y	GPE40L	575 VAC	332 VAC	180 VDC

GP103A

POWERED FROM MOTOR TERMINAL BLOCK
STANDARD RELEASE
VERY FAST STOPPING
(DC-SWITCHING + REDUCED POWER HOLDING)

40

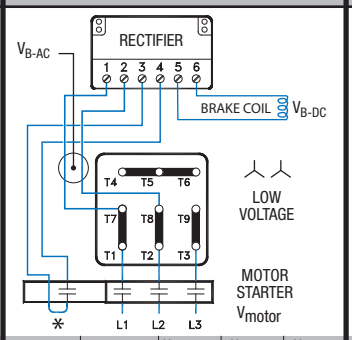

MOTOR	RECTIFIER	Vmotor	VB-AC	VB-DC
230YY/460Y	GPE20L	230 VAC	230 VAC	205 VDC

GP103B

POWERED FROM MOTOR TERMINAL BLOCK
STANDARD RELEASE
VERY FAST STOPPING
(DC-SWITCHING + REDUCED POWER HOLDING)

40

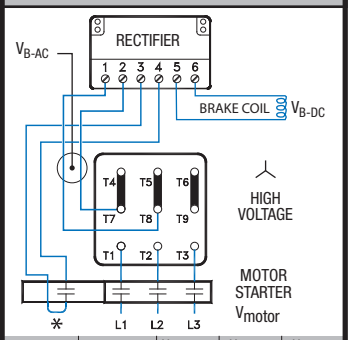

MOTOR	RECTIFIER	Vmotor	VB-AC	VB-DC
230YY/460Y	GPE20L	460 VAC	230 VAC	205 VDC

* The normally open contact/s (NO) is not supplied by NORD. It must close at the same time power is supplied to the brake. The contact must be capable of switching inductive loads and/or be rated IEC AC3.

– Braking method

Connections
GPE and GPU Rectifiers

GP103C

POWERED FROM MOTOR TERMINAL BLOCK
STANDARD RELEASE
VERY FAST STOPPING
(DC-SWITCHING + REDUCED POWER HOLDING)

40

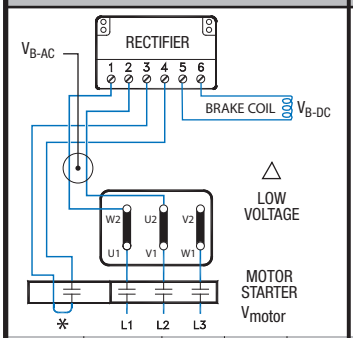

MOTOR	RECTIFIER	V_{motor}	V_{B-AC}	V_{B-DC}
208Δ/360Y	GPE20L	208 VAC	208 VAC	180 VDC
230Δ/400Y	GPE20L	230 VAC	230 VAC	205 VDC

GP103D

POWERED FROM MOTOR TERMINAL BLOCK
STANDARD RELEASE
VERY FAST STOPPING
(DC-SWITCHING + REDUCED POWER HOLDING)

40

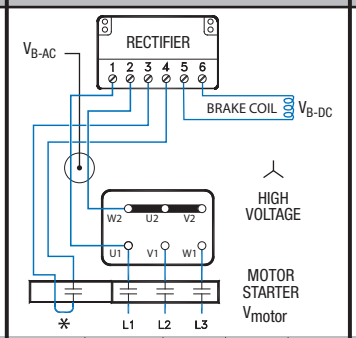

MOTOR	RECTIFIER	V_{motor}	V_{B-AC}	V_{B-DC}
230Δ/400Y	GPE20L	400 VAC	230 VAC	205 VDC

GP104A

SEPERATE POWER SOURCE
FAST-RELEASE (OVER EXCITATION)
NORMAL STOPPING (AC-SWITCHING)

45

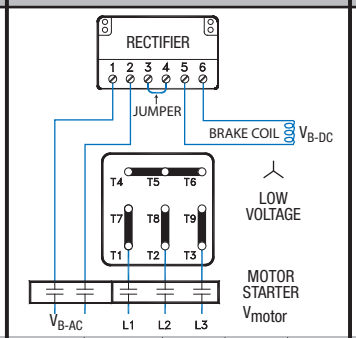

MOTOR	RECTIFIER	V_{motor}	V_{B-AC}	V_{B-DC}
230YY/460Y	GPU20L	230 VAC	230 VAC	105 VDC

GP104B

SEPERATE POWER SOURCE
FAST-RELEASE (OVER EXCITATION)
NORMAL STOPPING (AC-SWITCHING)

45

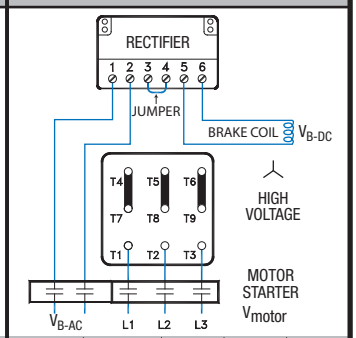

MOTOR	RECTIFIER	V_{motor}	V_{B-AC}	V_{B-DC}
230YY/460Y	GPU20L	460 VAC	230 VAC	105 VDC

GP104C

SEPERATE POWER SOURCE
FAST-RELEASE (OVER EXCITATION)
NORMAL STOPPING (AC-SWITCHING)

45

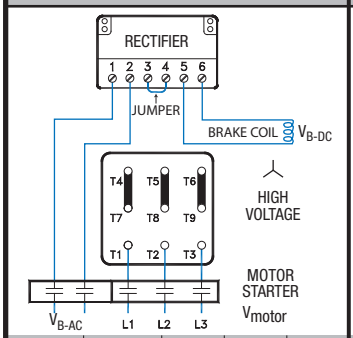

MOTOR	RECTIFIER	V_{motor}	V_{B-AC}	V_{B-DC}
230YY/460Y	GPU40L	460 VAC	460 VAC	205 VDC

GP104D

SEPERATE POWER SOURCE
FAST-RELEASE (OVER EXCITATION)
NORMAL STOPPING (AC-SWITCHING)

45

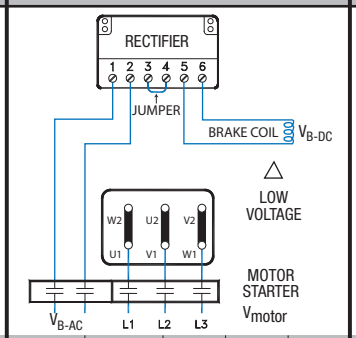

MOTOR	RECTIFIER	V_{motor}	V_{B-AC}	V_{B-DC}
208Δ/360Y	GPU20L	208 VAC	208 VAC	105 VDC
230Δ/400Y	GPU20L	230 VAC	230 VAC	105 VDC
400Δ/690Y	GPU40L	400 VAC	400 VAC	180 VDC
460Δ/Y	GPU40L	460 VAC	460 VAC	205 VDC

GP104E

SEPERATE POWER SOURCE
FAST-RELEASE (OVER EXCITATION)
NORMAL STOPPING (AC-SWITCHING)

45

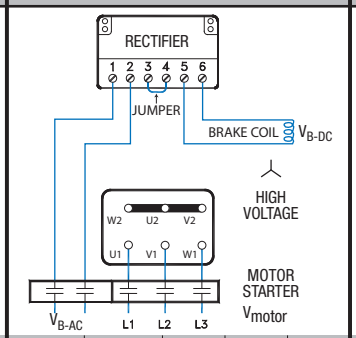

MOTOR	RECTIFIER	V_{motor}	V_{B-AC}	V_{B-DC}
230Δ/400Y	GPU20L	400 VAC	230 VAC	105 VDC
332Δ/575Y	GPU40L	575 VAC	332 VAC	180 VDC

GP105A

SEPERATE POWER SOURCE
FAST-RELEASE (OVER EXCITATION)
FAST STOPPING (DC-SWITCHING)

50

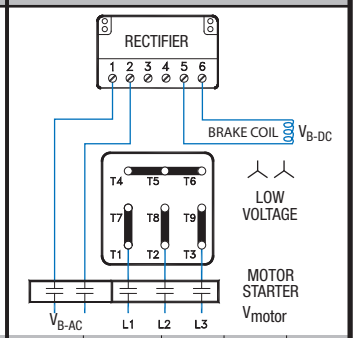

MOTOR	RECTIFIER	V_{motor}	V_{B-AC}	V_{B-DC}
230YY/460Y	GPU20L	230 VAC	230 VAC	105 VDC

GP105B

SEPERATE POWER SOURCE
FAST-RELEASE (OVER EXCITATION)
FAST STOPPING (DC-SWITCHING)

50

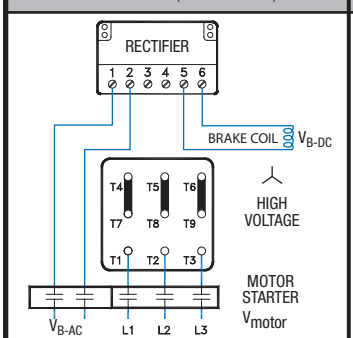

MOTOR	RECTIFIER	V_{motor}	V_{B-AC}	V_{B-DC}
230YY/460Y	GPU20L	460 VAC	230 VAC	105 VDC

GP105C

SEPERATE POWER SOURCE
FAST-RELEASE (OVER EXCITATION)
FAST STOPPING (DC-SWITCHING)

50

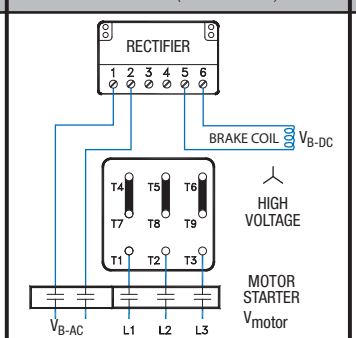

MOTOR	RECTIFIER	V_{motor}	V_{B-AC}	V_{B-DC}
230YY/460Y	GPU40L	460 VAC	460 VAC	205 VDC

GP105D

SEPERATE POWER SOURCE
FAST-RELEASE (OVER EXCITATION)
FAST STOPPING (DC-SWITCHING)

50

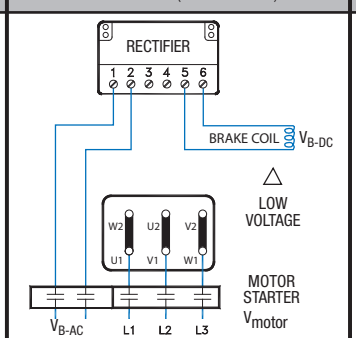

MOTOR	RECTIFIER	V_{motor}	V_{B-AC}	V_{B-DC}
208Δ/360Y	GPU20L	208 VAC	208 VAC	105 VDC
230Δ/400Y	GPU20L	230 VAC	230 VAC	105 VDC
400Δ/690Y	GPU40L	400 VAC	400 VAC	180 VDC
460Δ/Y	GPU40L	460 VAC	460 VAC	205 VDC

GP105E

SEPERATE POWER SOURCE
FAST-RELEASE (OVER EXCITATION)
FAST STOPPING (DC-SWITCHING)

50

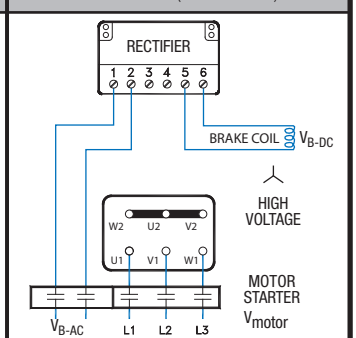

MOTOR	RECTIFIER	V_{motor}	V_{B-AC}	V_{B-DC}
230Δ/400Y	GPU20L	400 VAC	230 VAC	105 VDC
332Δ/575Y	GPU40L	575 VAC	332 VAC	180 VDC

* The normally open contact/s (NO) is not supplied by NORD. It must close at the same time power is supplied to the brake. The contact must be capable of switching inductive loads and/or be rated IEC AC3.

– Braking method

Send Quote Requests to info@automatedpt.com
Call +1(800)985-6929 To Order or Order Online At Nordgearmotors.com

Connections
GPU and PMG Rectifiers

NORD DRIVESYSTEMS

GP106A

SEPERATE POWER SOURCE
STANDARD RELEASE
VERY FAST STOPPING
(DC-SWITCHING + REDUCED POWER HOLDING)

55

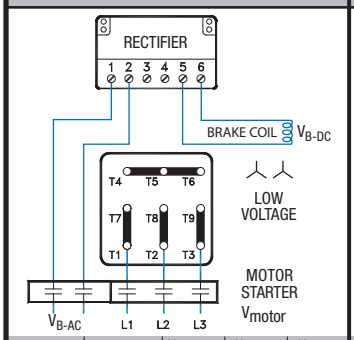

MOTOR	RECTIFIER	Vmotor	VB-AC	VB-DC
230YY/460Y	GPU20L	230 VAC	230 VAC	205 VDC

GP106B

SEPERATE POWER SOURCE
STANDARD RELEASE
VERY FAST STOPPING
(DC-SWITCHING + REDUCED POWER HOLDING)

55

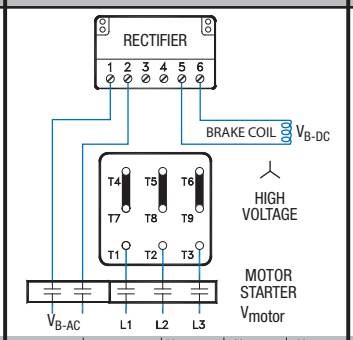

MOTOR	RECTIFIER	Vmotor	VB-AC	VB-DC
230YY/460Y	GPU20L	460 VAC	230 VAC	205 VDC

GP106C

SEPERATE POWER SOURCE
STANDARD RELEASE
VERY FAST STOPPING
(DC-SWITCHING + REDUCED POWER HOLDING)

55

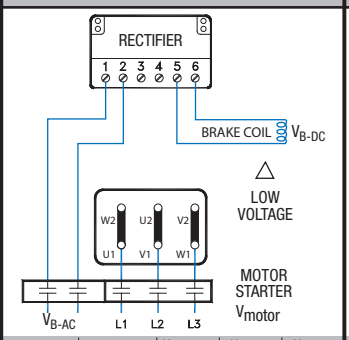

MOTOR	RECTIFIER	Vmotor	VB-AC	VB-DC
208Δ/360Y	GPU20L	208 VAC	208 VAC	180 VDC
230Δ/400Y	GPU20L	230 VAC	230 VAC	205 VDC

GP106D

SEPERATE POWER SOURCE
STANDARD RELEASE
VERY FAST STOPPING
(DC-SWITCHING + REDUCED POWER HOLDING)

55

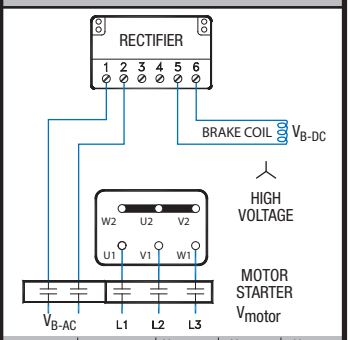

MOTOR	RECTIFIER	Vmotor	VB-AC	VB-DC
230Δ/400Y	GPU20L	400 VAC	230 VAC	205 VDC

PMG101A

POWERED FROM
MOTOR TERMINAL BLOCK
FAST-RELEASE (OVER EXCITATION)
NORMAL STOPPING (AC-SWITCHING)

30

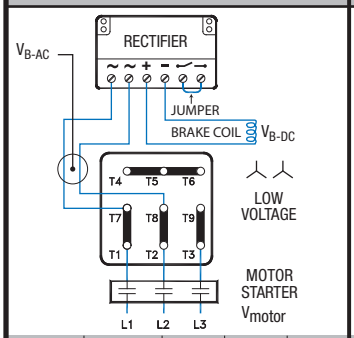

MOTOR	RECTIFIER	Vmotor	VB-AC	VB-DC
230YY/460Y	PMG500	230 VAC	230 VAC	105 VDC

PMG101B

POWERED FROM
MOTOR TERMINAL BLOCK
FAST-RELEASE (OVER EXCITATION)
NORMAL STOPPING (AC-SWITCHING)

30

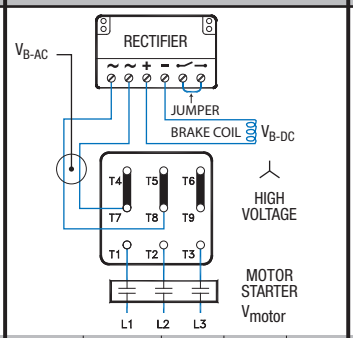

MOTOR	RECTIFIER	Vmotor	VB-AC	VB-DC
230YY/460Y	PMG500	460 VAC	230 VAC	105 VDC

PMG101C

POWERED FROM
MOTOR TERMINAL BLOCK
FAST-RELEASE (OVER EXCITATION)
NORMAL STOPPING (AC-SWITCHING)

30

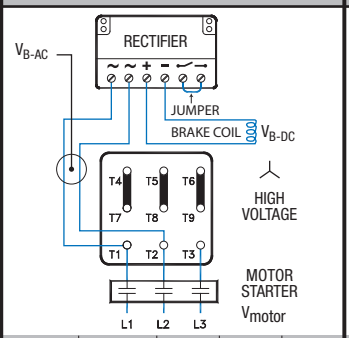

MOTOR	RECTIFIER	Vmotor	VB-AC	VB-DC
230YY/460Y	PMG500	460 VAC	460 VAC	205 VDC

PMG101D

POWERED FROM
MOTOR TERMINAL BLOCK
FAST-RELEASE (OVER EXCITATION)
NORMAL STOPPING (AC-SWITCHING)

30

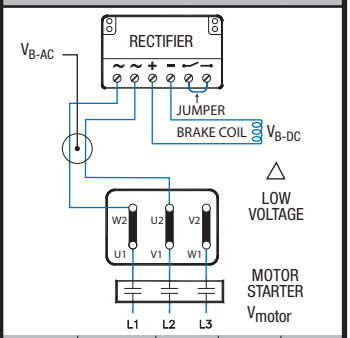

MOTOR	RECTIFIER	Vmotor	VB-AC	VB-DC
208Δ/360Y	PMG500	208 VAC	208 VAC	105 VDC
230Δ/400Y	PMG500	230 VAC	230 VAC	105 VDC
400Δ/690Y	PMG500	400 VAC	400 VAC	180 VDC
460Δ/Y	PMG500	460 VAC	460 VAC	205 VDC

PMG101E

POWERED FROM
MOTOR TERMINAL BLOCK
FAST-RELEASE (OVER EXCITATION)
NORMAL STOPPING (AC-SWITCHING)

30

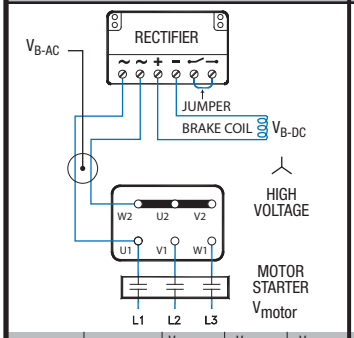

MOTOR	RECTIFIER	Vmotor	VB-AC	VB-DC
230Δ/400Y	PMG500	400 VAC	230 VAC	105 VDC

PMG102A

POWERED FROM
MOTOR TERMINAL BLOCK
FAST-RELEASE (OVER EXCITATION)
FAST STOPPING (DC-SWITCHING)

35

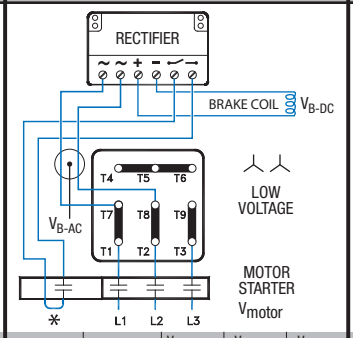

MOTOR	RECTIFIER	Vmotor	VB-AC	VB-DC
230YY/460Y	PMG500	230 VAC	230 VAC	105 VDC

PMG102B

POWERED FROM
MOTOR TERMINAL BLOCK
FAST-RELEASE (OVER EXCITATION)
FAST STOPPING (DC-SWITCHING)

35

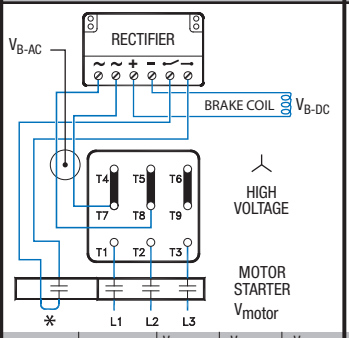

MOTOR	RECTIFIER	Vmotor	VB-AC	VB-DC
230YY/460Y	PMG500	460 VAC	230 VAC	105 VDC

PMG102C

POWERED FROM
MOTOR TERMINAL BLOCK
FAST-RELEASE (OVER EXCITATION)
FAST STOPPING (DC-SWITCHING)

35

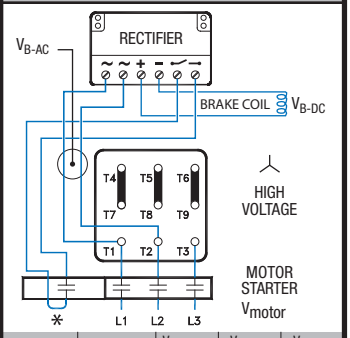

MOTOR	RECTIFIER	Vmotor	VB-AC	VB-DC
230YY/460Y	PMG500	460 VAC	460 VAC	205 VDC

* The normally open contact/s (NO) is not supplied by NORD. It must close at the same time power is supplied to the brake. The contact must be capable of switching inductive loads and/or be rated IEC AC3.

– Braking method

Connections
PMG Rectifiers

PMG102D

POWERED FROM MOTOR TERMINAL BLOCK
FAST-RELEASE (OVER EXCITATION)
FAST STOPPING (DC-SWITCHING)

35

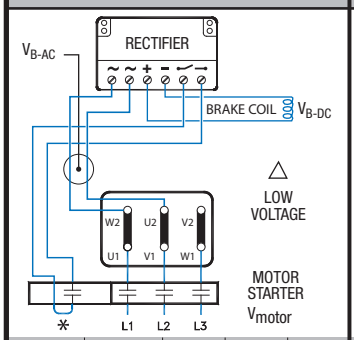

MOTOR	RECTIFIER	Vmotor	VB-AC	VB-DC
208Δ/360Y	PMG500	208 VAC	208 VAC	105 VDC
230Δ/400Y	PMG500	230 VAC	230 VAC	105 VDC
400Δ/690Y	PMG500	400 VAC	400 VAC	180 VDC
460Δ/Y	PMG500	460 VAC	460 VAC	205 VDC

PMG102E

POWERED FROM MOTOR TERMINAL BLOCK
FAST-RELEASE (OVER EXCITATION)
FAST STOPPING (DC-SWITCHING)

35

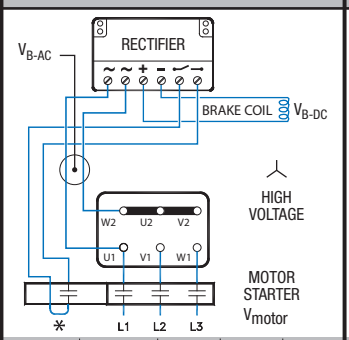

MOTOR	RECTIFIER	Vmotor	VB-AC	VB-DC
230Δ/400Y	PMG500	400 VAC	230 VAC	105 VDC

PMG103A

POWERED FROM MOTOR TERMINAL BLOCK
STANDARD RELEASE
VERY FAST STOPPING
(DC-SWITCHING + REDUCED POWER HOLDING)

40

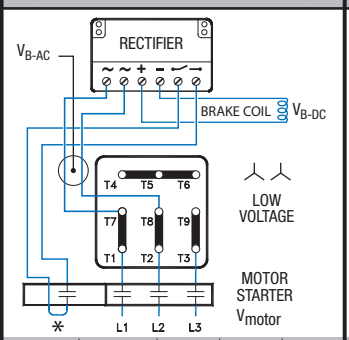

MOTOR	RECTIFIER	Vmotor	VB-AC	VB-DC
230YY/460Y	PMG500	230 VAC	230 VAC	205 VDC

PMG103B

POWERED FROM MOTOR TERMINAL BLOCK
STANDARD RELEASE
VERY FAST STOPPING
(DC-SWITCHING + REDUCED POWER HOLDING)

40

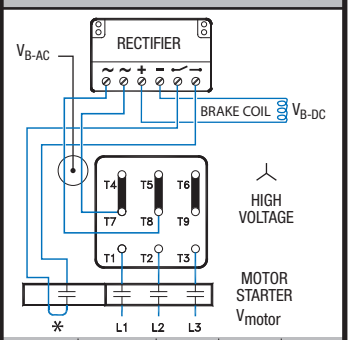

MOTOR	RECTIFIER	Vmotor	VB-AC	VB-DC
230YY/460Y	PMG500	460 VAC	230 VAC	205 VDC

PMG103C

POWERED FROM MOTOR TERMINAL BLOCK
STANDARD RELEASE
VERY FAST STOPPING
(DC-SWITCHING + REDUCED POWER HOLDING)

40

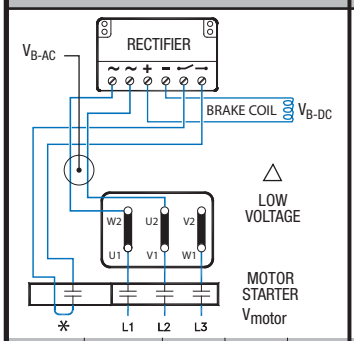

MOTOR	RECTIFIER	Vmotor	VB-AC	VB-DC
208Δ/360Y	PMG500	208 VAC	208 VAC	180 VDC
230Δ/400Y	PMG500	230 VAC	230 VAC	205 VDC

PMG103D

POWERED FROM MOTOR TERMINAL BLOCK
STANDARD RELEASE
VERY FAST STOPPING
(DC-SWITCHING + REDUCED POWER HOLDING)

40

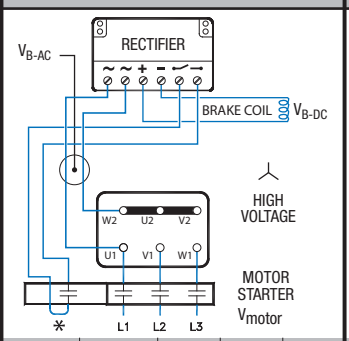

MOTOR	RECTIFIER	Vmotor	VB-AC	VB-DC
230Δ/400Y	PMG500	400 VAC	230 VAC	205 VDC

PMG104A

SEPERATE POWER SOURCE
FAST-RELEASE (OVER EXCITATION)
NORMAL STOPPING (AC-SWITCHING)

45

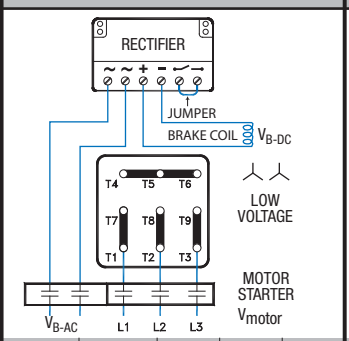

MOTOR	RECTIFIER	Vmotor	VB-AC	VB-DC
230YY/460Y	PMG500	230 VAC	230 VAC	105 VDC

PMG104B

SEPERATE POWER SOURCE
FAST-RELEASE (OVER EXCITATION)
NORMAL STOPPING (AC-SWITCHING)

45

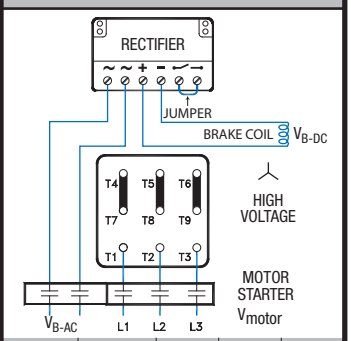

MOTOR	RECTIFIER	Vmotor	VB-AC	VB-DC
230YY/460Y	PMG500	460 VAC	230 VAC	105 VDC

PMG104C

SEPERATE POWER SOURCE
FAST-RELEASE (OVER EXCITATION)
NORMAL STOPPING (AC-SWITCHING)

45

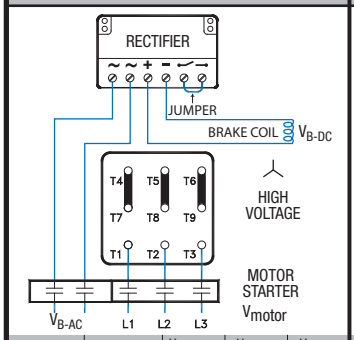

MOTOR	RECTIFIER	Vmotor	VB-AC	VB-DC
230YY/460Y	PMG500	460 VAC	460 VAC	205 VDC

PMG104D

SEPERATE POWER SOURCE
FAST-RELEASE (OVER EXCITATION)
NORMAL STOPPING (AC-SWITCHING)

45

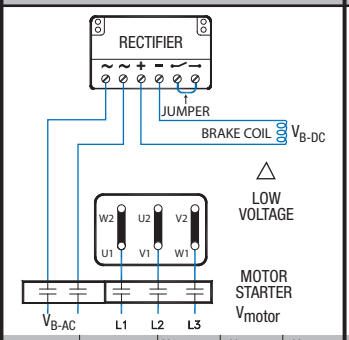

MOTOR	RECTIFIER	Vmotor	VB-AC	VB-DC
208Δ/360Y	PMG500	208 VAC	208 VAC	105 VDC
230Δ/400Y	PMG500	230 VAC	230 VAC	105 VDC
400Δ/690Y	PMG500	400 VAC	400 VAC	180 VDC
460Δ/Y	PMG500	460 VAC	460 VAC	205 VDC

PMG104E

SEPERATE POWER SOURCE
FAST-RELEASE (OVER EXCITATION)
NORMAL STOPPING (AC-SWITCHING)

45

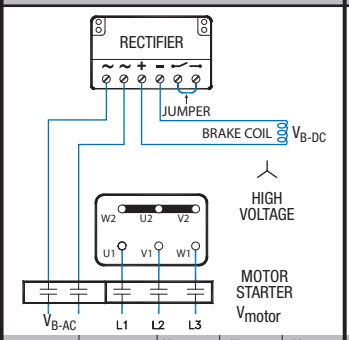

MOTOR	RECTIFIER	Vmotor	VB-AC	VB-DC
230Δ/400Y	PMG500	400 VAC	230 VAC	105 VDC

PMG105A

SEPERATE POWER SOURCE
FAST-RELEASE (OVER EXCITATION)
FAST STOPPING (DC-SWITCHING)

50

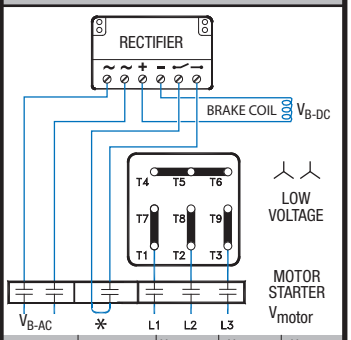

MOTOR	RECTIFIER	Vmotor	VB-AC	VB-DC
230YY/460Y	PMG500	230 VAC	230 VAC	105 VDC

* The normally open contact/s (NO) is not supplied by NORD. It must close at the same time power is supplied to the brake. The contact must be capable of switching inductive loads and/or be rated IEC AC3.

– Braking method

NORD DRIVESYSTEMS

PMG105B

SEPERATE POWER SOURCE
FAST-RELEASE (OVER EXCITATION)
FAST STOPPING (DC-SWITCHING)

50

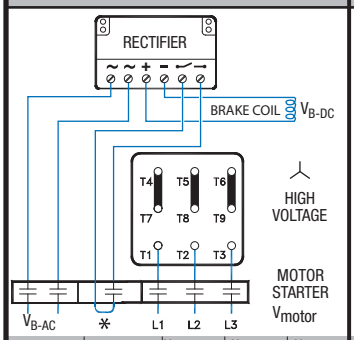

MOTOR	RECTIFIER	V_{motor}	V_{B-AC}	V_{B-DC}
230YY/460Y	PMG500	460 VAC	230 VAC	105 VDC

PMG105C

SEPERATE POWER SOURCE
FAST-RELEASE (OVER EXCITATION)
FAST STOPPING (DC-SWITCHING)

50

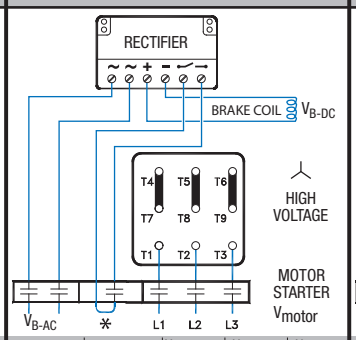

MOTOR	RECTIFIER	V_{motor}	V_{B-AC}	V_{B-DC}
230YY/460Y	PMG500	460 VAC	460 VAC	205 VDC

PMG105D

SEPERATE POWER SOURCE
FAST-RELEASE (OVER EXCITATION)
FAST STOPPING (DC-SWITCHING)

50

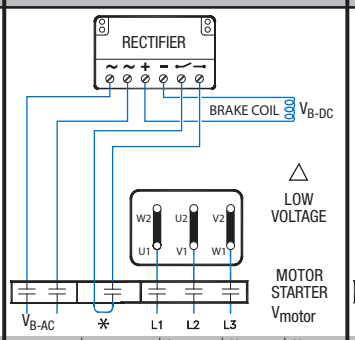

MOTOR	RECTIFIER	V_{motor}	V_{B-AC}	V_{B-DC}
208Δ/360Y	PMG500	208 VAC	208 VAC	105 VDC
230Δ/400Y	PMG500	230 VAC	230 VAC	105 VDC
400Δ/690Y	PMG500	400 VAC	400 VAC	180 VDC
460Δ/Y	PMG500	460 VAC	460 VAC	205 VDC

PMG105E

SEPERATE POWER SOURCE
FAST-RELEASE (OVER EXCITATION)
FAST STOPPING (DC-SWITCHING)

50

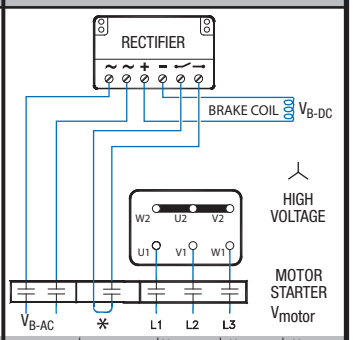

MOTOR	RECTIFIER	V_{motor}	V_{B-AC}	V_{B-DC}
230Δ/400Y	PMG500	400 VAC	230 VAC	105 VDC

PMG106A

SEPERATE POWER SOURCE
STANDARD RELEASE
VERY FAST STOPPING
(DC-SWITCHING + REDUCED POWER HOLDING)

55

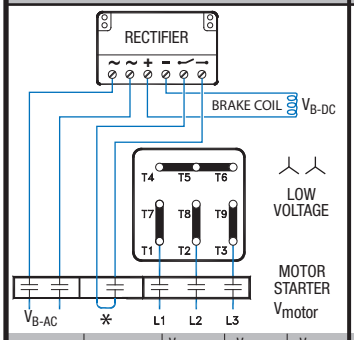

MOTOR	RECTIFIER	V_{motor}	V_{B-AC}	V_{B-DC}
230YY/460Y	PMG500	230 VAC	230 VAC	205 VDC

PMG106B

SEPERATE POWER SOURCE
STANDARD RELEASE
VERY FAST STOPPING
(DC-SWITCHING + REDUCED POWER HOLDING)

55

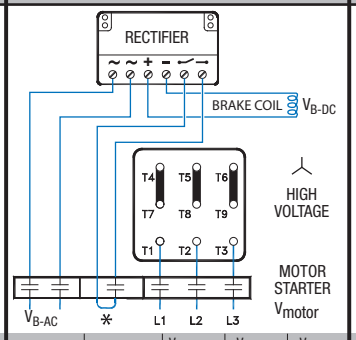

MOTOR	RECTIFIER	V_{motor}	V_{B-AC}	V_{B-DC}
230YY/460Y	PMG500	460 VAC	230 VAC	205 VDC

PMG106C

SEPERATE POWER SOURCE
STANDARD RELEASE
VERY FAST STOPPING
(DC-SWITCHING + REDUCED POWER HOLDING)

55

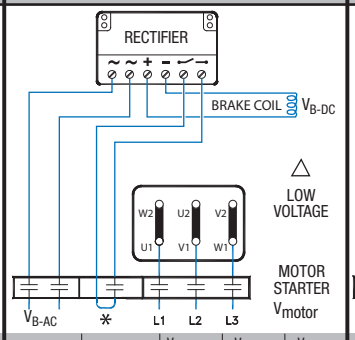

MOTOR	RECTIFIER	V_{motor}	V_{B-AC}	V_{B-DC}
208Δ/360Y	PMG500	208 VAC	208 VAC	180 VDC
230Δ/400Y	PMG500	230 VAC	230 VAC	205 VDC

PMG106D

SEPERATE POWER SOURCE
STANDARD RELEASE
VERY FAST STOPPING
(DC-SWITCHING + REDUCED POWER HOLDING)

55

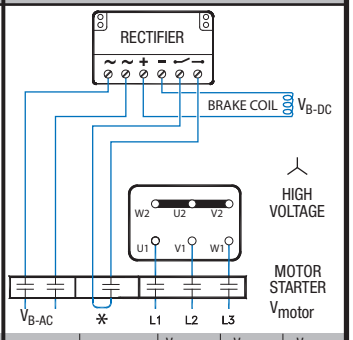

MOTOR	RECTIFIER	V_{motor}	V_{B-AC}	V_{B-DC}
230Δ/400Y	PMG500	400 VAC	230 VAC	205 VDC

* The normally open contact/s (NO) is not supplied by NORD. It must close at the same time power is supplied to the brake. The contact must be capable of switching inductive loads and/or be rated IEC AC3.

– Braking method

Connections
IR Relays

IR Relay Typical Connection Diagrams

IR101A

POWERED FROM MOTOR TERMINAL BLOCK
STANDARD-RELEASE
FAST STOPPING (DC-SWITCHING)

15

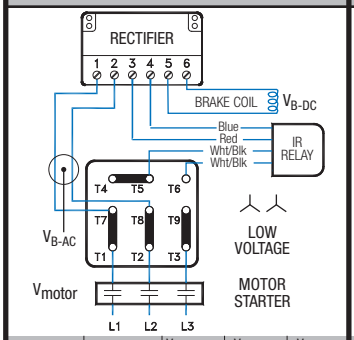

MOTOR	RECTIFIER	V_{motor}	V_{B-AC}	V_{B-DC}
208-230Y/460Y	GVE20	208VAC	230 VAC	205 VDC
230Y/460Y	GVE20	230 VAC	230 VAC	205 VDC

IR101B

POWERED FROM MOTOR TERMINAL BLOCK
STANDARD-RELEASE
FAST STOPPING (DC-SWITCHING)

15

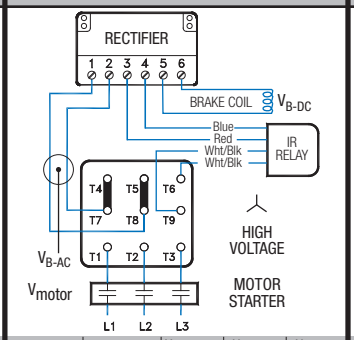

MOTOR	RECTIFIER	V_{motor}	V_{B-AC}	V_{B-DC}
230Y/460Y	GVE20	460 VAC	230 VAC	205 VDC

IR102A

POWERED FROM MOTOR TERMINAL BLOCK
STANDARD-RELEASE
FAST STOPPING (DC-SWITCHING)

15

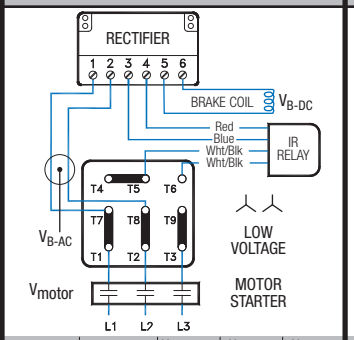

MOTOR	RECTIFIER	V_{motor}	V_{B-AC}	V_{B-DC}
208-230Y/460Y	GHE40	208VAC	230 VAC	105 VDC
230Y/460Y	GHE40	230 VAC	230 VAC	105 VDC

IR102B

POWERED FROM MOTOR TERMINAL BLOCK
STANDARD-RELEASE
FAST STOPPING (DC-SWITCHING)

15

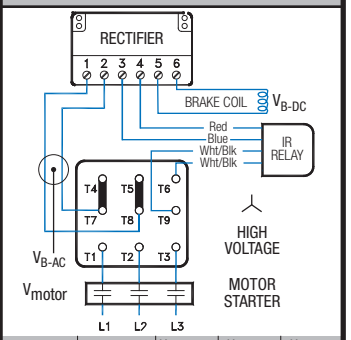

MOTOR	RECTIFIER	V_{motor}	V_{B-AC}	V_{B-DC}
230Y/460Y	GHE40	460 VAC	230 VAC	105 VDC

IR103

POWERED FROM MOTOR TERMINAL BLOCK
STANDARD-RELEASE
FAST STOPPING (DC-SWITCHING)

15

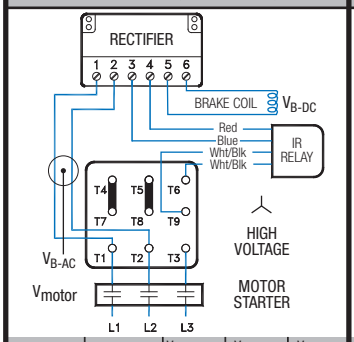

MOTOR	RECTIFIER	V_{motor}	V_{B-AC}	V_{B-DC}
230Y/460Y	GHE40	460 VAC	460VAC	205 VDC

IR301

POWERED FROM MOTOR TERMINAL BLOCK
STANDARD-RELEASE
FAST STOPPING (DC-SWITCHING)

15

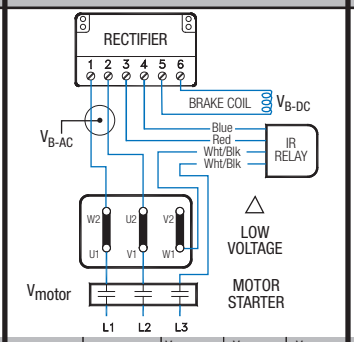

MOTOR	RECTIFIER	V_{motor}	V_{B-AC}	V_{B-DC}
208Δ/360Y	GVE20	208 VAC	208 VAC	180 VDC
230Δ/400Y	GVE20	230 VAC	230 VAC	205 VDC

IR401

POWERED FROM MOTOR TERMINAL BLOCK
STANDARD-RELEASE
FAST STOPPING (DC-SWITCHING)

15

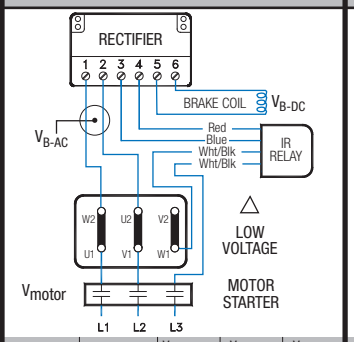

MOTOR	RECTIFIER	V_{motor}	V_{B-AC}	V_{B-DC}
460Δ/800Y	GHE40	460 VAC	460 VAC	205 VDC

IR501

POWERED FROM MOTOR TERMINAL BLOCK
STANDARD-RELEASE
FAST STOPPING (DC-SWITCHING)

15

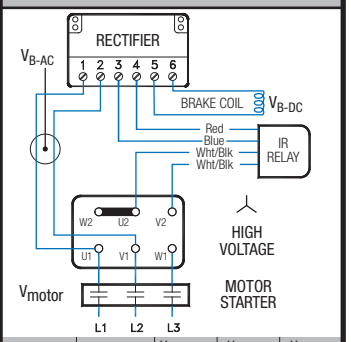

MOTOR	RECTIFIER	V_{motor}	V_{B-AC}	V_{B-DC}
332Δ/575Y	GHE50	575 VAC	575 VAC	250 VDC

IR601

POWERED FROM MOTOR TERMINAL BLOCK
STANDARD-RELEASE
FAST STOPPING (DC-SWITCHING)

15

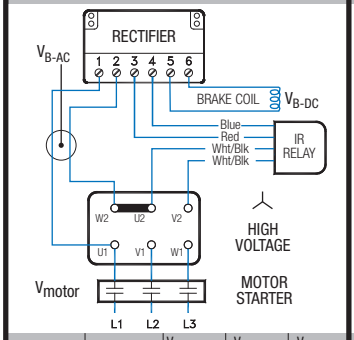

MOTOR	RECTIFIER	V_{motor}	V_{B-AC}	V_{B-DC}
230Δ/400Y	GVE20	400 VAC	230 VAC	205 VDC
230Δ/400Y	GHE40	400 VAC	230 VAC	105 VDC

IR602

POWERED FROM MOTOR TERMINAL BLOCK
STANDARD-RELEASE
FAST STOPPING (DC-SWITCHING)

15

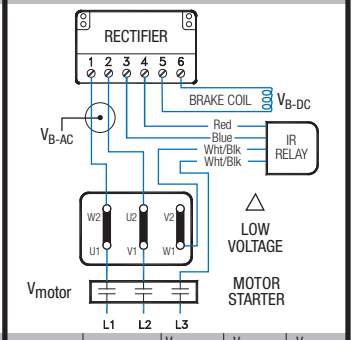

MOTOR	RECTIFIER	V_{motor}	V_{B-AC}	V_{B-DC}
400Δ/690Y	GHE40	400 VAC	400 VAC	180 VDC

IR Relay with GUE40V Dual Wave Rectifier

IR701A — POWERED FROM MOTOR TERMINAL BLOCK — STANDARD-RELEASE — FAST STOPPING (DC-SWITCHING) — 15

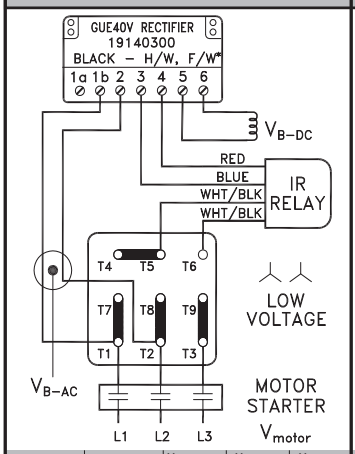

MOTOR	RECTIFIER	V_{motor}	V_{B-AC}	V_{B-DC}
208-230Y/460Y	GUE40V	208 VAC	230 VAC	205 VDC
230YY/460Y	GUE40V	230 VAC	230 VAC	205 VDC

IR701B — POWERED FROM MOTOR TERMINAL BLOCK — STANDARD-RELEASE — FAST STOPPING (DC-SWITCHING) — 15

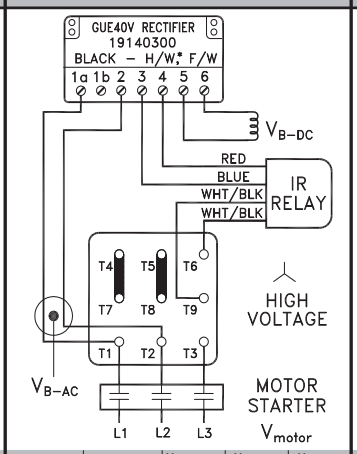

MOTOR	RECTIFIER	V_{motor}	V_{B-AC}	V_{B-DC}
208-230Y/460Y	GUE40V	460 VAC	460 VAC	205 VDC
230YY/460Y	GUE40V	460 VAC	460 VAC	205 VDC

IR702A — POWERED FROM MOTOR TERMINAL BLOCK — STANDARD-RELEASE — FAST STOPPING (DC-SWITCHING) — 15

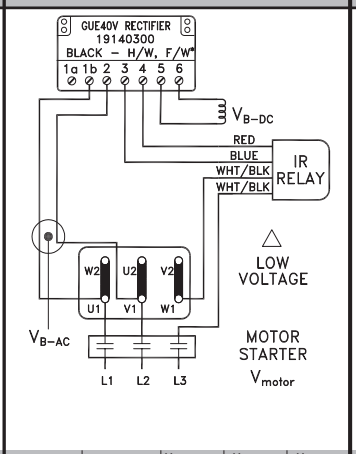

MOTOR	RECTIFIER	V_{motor}	V_{B-AC}	V_{B-DC}
208Δ/360Y	GUE40V	208 VAC	208 VAC	180 VDC
230Δ/400Y	GUE40V	230 VAC	230 VAC	205 VDC

IR702B — POWERED FROM MOTOR TERMINAL BLOCK — STANDARD-RELEASE — FAST STOPPING (DC-SWITCHING) — 15

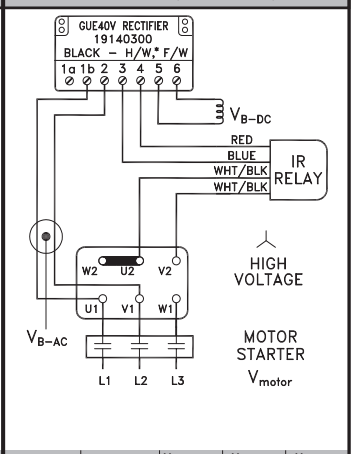

MOTOR	RECTIFIER	V_{motor}	V_{B-AC}	V_{B-DC}
230Δ/400Y	GUE40V	400 VAC	400 VAC	180 VDC

GPE Rectifier for External DC-Switching with IR Relay

IR151A — POWERED FROM MOTOR TERMINAL BLOCK — FAST RELEASE (OVER EXCITATION) — FAST STOPPING (DC-SWITCHING) — 35

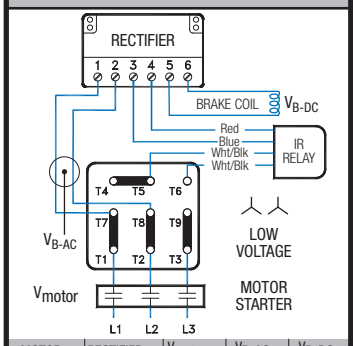

MOTOR	RECTIFIER	V_{motor}	V_{B-AC}	V_{B-DC}
230YY/460Y	GPE20L	230 VAC	230 VAC	105 VDC

IR151B — POWERED FROM MOTOR TERMINAL BLOCK — STANDARD-RELEASE — FAST STOPPING (DC-SWITCHING) — 35

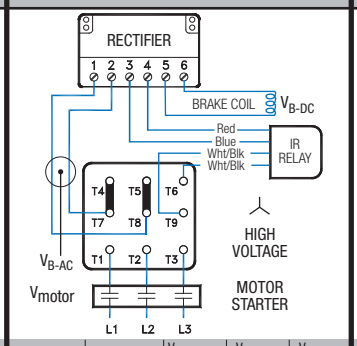

MOTOR	RECTIFIER	V_{motor}	V_{B-AC}	V_{B-DC}
230YY/460Y	GPE20L	460 VAC	230 VAC	105 VDC

IR152A — POWERED FROM MOTOR TERMINAL BLOCK — STANDARD-RELEASE — VERY FAST STOPPING (REDUCED POWER HOLD) — 40

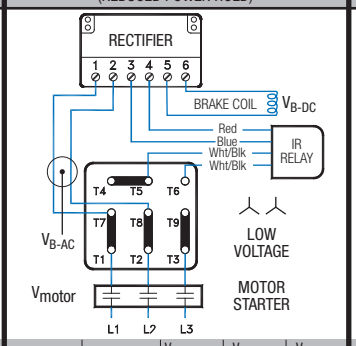

MOTOR	RECTIFIER	V_{motor}	V_{B-AC}	V_{B-DC}
230YY/460Y	GPE20L	230 VAC	230 VAC	205 VDC

IR152B — POWERED FROM MOTOR TERMINAL BLOCK — STANDARD-RELEASE — VERY FAST STOPPING (REDUCED POWER HOLD) — 40

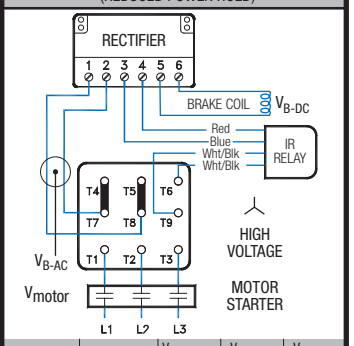

MOTOR	RECTIFIER	V_{motor}	V_{B-AC}	V_{B-DC}
230YY/460Y	GPE20L	460 VAC	230 VAC	205 VDC

Requirements

- Brake must be powered from the motor's terminal block (not seperately powered)
- Motor must be a single speed and should not be powered by a frequency drive or soft starter

* The normally open contact/s (NO) is not supplied by NORD. It must close at the same time power is supplied to the brake. The contact must be capable of switching inductive loads and/or be rated IEC AC3.

– Braking method

Connections
Variable Frequency Drives

Connection Guide for Brakes with AC-Switching

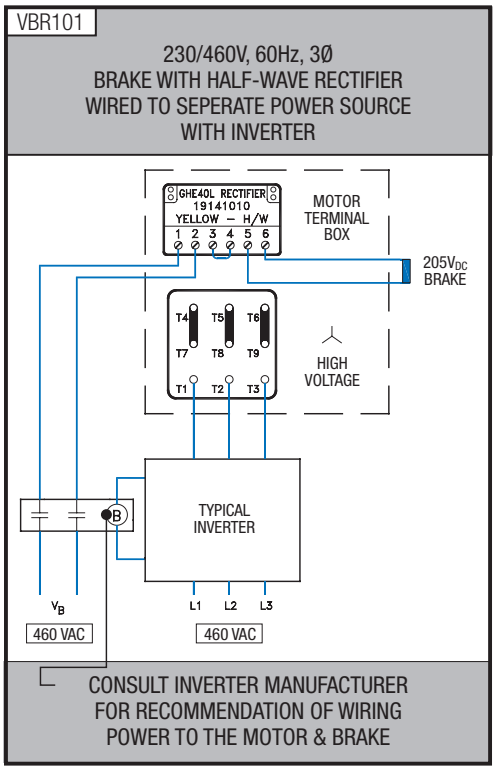

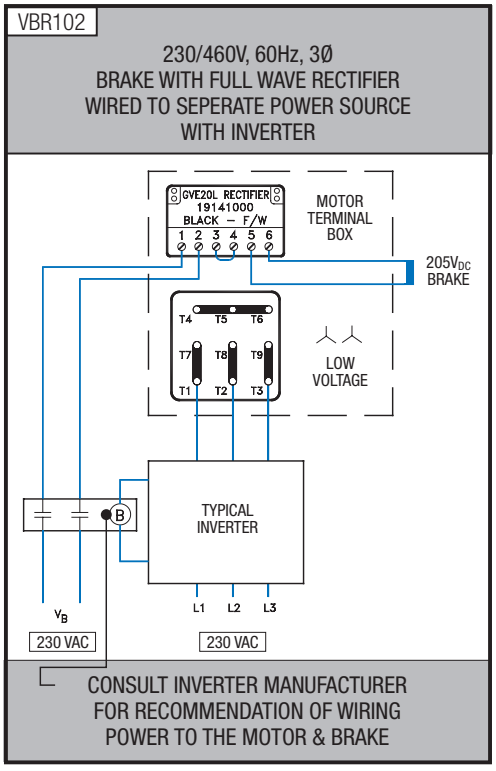

Connection Guide for Brakes with DC-Switching

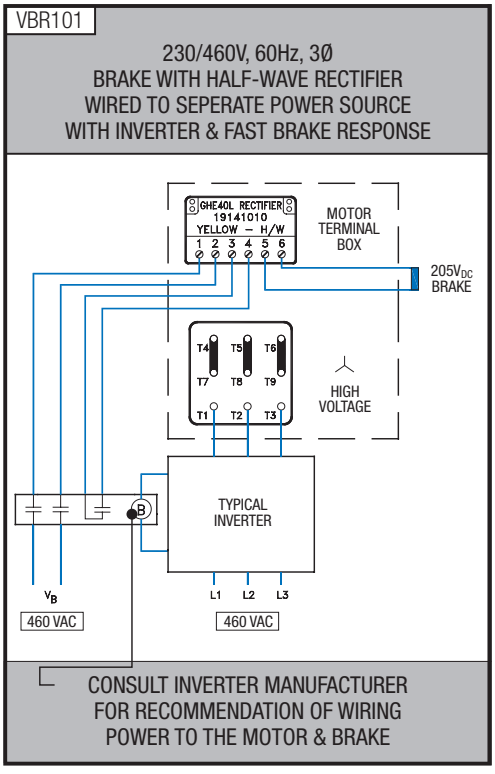

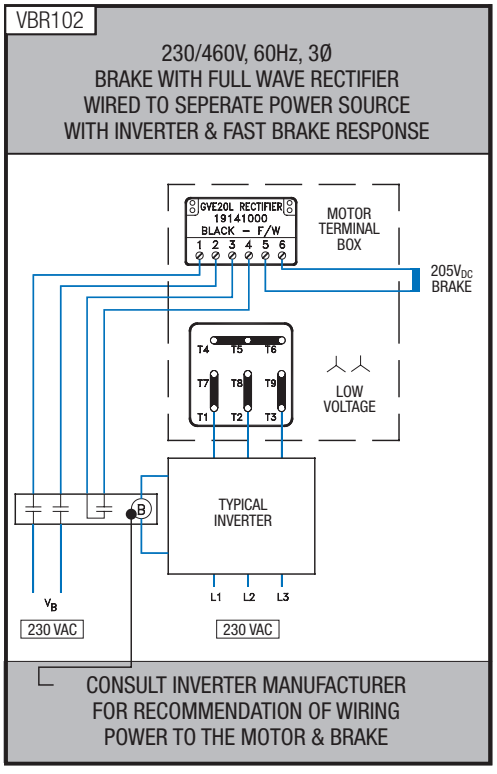

Send Quote Requests to info@automatedpt.com
Call +1(800)985-6929 To Order or Order Online At Nordgearmotors.com

Send Quote Requests to info@automatedpt.com
Call +1(800)985-6929 To Order or Order Online At Nordgearmotors.com

Ratings

230/460V 60HZ MOTORS 88
115/230V 60HZ SINGLE PHASE MOTORS 94
575V 60HZ MOTORS 95
400V 50HZ MOTORS 99
230V 50HZ SINGLE PHASE MOTORS 102

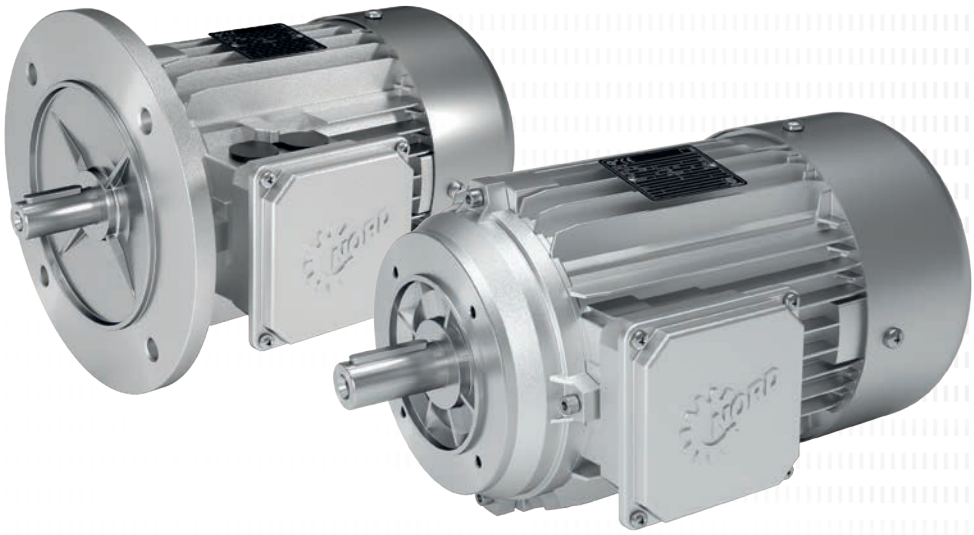

Send Quote Requests to info@automatedpt.com
Call +1(800)985-6929 To Order or Order Online At Nordgearmotors.com

Premium Efficiency 230/460V - 60Hz

Inverter duty / Induction motor / TEFC
Synchronous speed 1800rpm @ 60Hz / 4-pole / Three-phase
Voltage: 230/460V - 60Hz / 1.15 Service factor
Continuous duty / 40°C ambient / Up to 3300ft elevation
Class B temperature rise / Class F insulation

CC092B Energy Verified

Motor Type	Motor Power P_n		Output Speed n_n	Full Load Current I_n		Locked Rotor Current Ratio I_a/I_n	NEMA Code Letter	Full Load Torque T_n	Locked Rotor Torque Ratio T_a/T_n	Break Down Torque Ratio T_k/T_n	Power Factor pf	Eff. η	Rotor Inertia J_m	Weight
				230V	460V									
	[hp]	[kW]	[rpm]	[A]	[A]	[%]		[lb-in]				[%]	[lb-ft²]	[lb]
63 SP/4	0.16	0.12	1695	0.72	0.36	400	J	5.95	3.4	3.3	0.62	68.1	0.0057	8.4
63 LP/4	0.25	0.18	1705	1.08	0.54	430	J	9.24	4.1	3.9	0.57	72.5	0.0078	10
71 SP/4	0.33	0.25	1725	1.26	0.63	590	K	12.1	3.7	3.9	0.67	75.8	0.020	13
71 LP/4	0.50	0.37	1725	1.62	0.81	610	J	18.3	3.3	3.6	0.72	78.0	0.026	16
80 SP/4	0.75	0.55	1735	2.30	1.15	610	J	27.2	2.8	3.3	0.72	82.7	0.034	21
80 LP/4	1.00	0.75	1730	3.14	1.57	650	K	36.4	3.5	3.8	0.70	86.1	0.045	22
90 SP/4	1.50	1.10	1740	4.20	2.10	840	L	54.3	4.2	4.9	0.76	86.9	0.081	33
90 LP/4	2.00	1.50	1730	5.60	2.80	760	K	72.9	3.9	4.3	0.78	87.0	0.093	37
100 LP/4*	3.00	2.20	1765	8.21	4.11	960	M	107	3.7	4.9	0.75	90.3	0.176	54
100 AP/4*	4.00	3.00	1760	10.9	5.43	880	L	143	3.6	4.5	0.79	90.3	0.204	60
112 MP/4	5.00	3.70	1755	13.0	6.50	950	L	180	4.1	4.6	0.80	90.3	0.332	78
132 SP/4	7.50	5.50	1770	19.5	9.75	1020	M	267	4.7	5.0	0.77	91.7	0.759	121
132 MP/4	10.00	7.50	1765	26.7	13.4	960	M	357	4.7	5.0	0.77	91.7	0.831	137
160 MP/4	15.00	11.00	1770	35.6	17.8	880	K	534	3.2	3.8	0.84	92.5	1.59	205
160 LP/4	20.00	15.00	1775	47.6	23.8	1080	M	710	4.3	4.7	0.85	93.0	2.18	269
180 MP/4	25.00	18.50	1780	60.6	30.3	1010	L	885	3.9	4.0	0.82	93.6	3.80	342
180 LP/4	30.00	22.00	1780	69.6	34.8	880	K	1062	3.3	3.4	0.85	93.6	3.80	342
225 RP/4	40.00	30.00	1785	-	49.5	890	K	1412	3.4	3.8	0.81	94.5	11.6	694
225 SP/4	50.00	37.00	1785	-	59.7	880	K	1765	3.0	3.7	0.82	94.6	12.8	728
225 MP/4	60.00	45.00	1785	-	72.0	910	K	2118	3.3	3.6	0.83	95.2	15.9	805
250 WP/4	75.00	55.00	1785	-	84.4	920	J	2648	2.9	3.2	0.86	95.4	19.5	882

* APAB series

Send Quote Requests to info@automatedpt.com
Call +1(800)985-6929 To Order or Order Online At Nordgearmotors.com

Standard Efficiency 230/460V - 60 Hz

Inverter duty / Induction motor / TEFC
Synchronous speed 1800rpm @ 60Hz / 4-pole / Three-phase
Voltage: 230/460V - 60Hz / 1.15 Service factor
60-Minute duty / 40°C ambient / Up to 3300ft elevation
Class B temperature rise / Class F insulation

Motor Type	Motor Power P_n		Output Speed n_n	Full Load Current I_n		Locked Rotor Current Ratio I_a/I_n	NEMA Code Letter	Full Load Torque T_n	Locked Rotor Torque Ratio T_a/T_n	Break Down Torque Ratio T_k/T_n	Power Factor pf	Eff. η	Rotor Inertia J_m	Weight
				230V	460V									
	[hp]	[kW]	[rpm]	[A]	[A]	[%]		[lb-in]				[%]	[lb-ft²]	[lb]
63 S/4	0.16	0.12	1700	0.88	0.44	250	F	5.93	2.7	3.5	0.66	52.0	0.0050	7.9
63 L/4	0.25	0.18	1680	1.12	0.56	270	E	9.38	2.3	2.5	0.71	57.0	0.0066	9.3
71 S/4	0.33	0.25	1710	1.56	0.78	310	G	12.2	2.4	2.7	0.64	63.0	0.017	12
71 L/4	0.50	0.37	1720	1.90	0.95	350	F	18.3	2.3	2.7	0.69	71.0	0.020	14
80 S/4	0.75	0.55	1710	2.70	1.35	350	F	27.6	2.2	2.3	0.71	72.0	0.026	18
80 L/4	1.00	0.75	1650	3.66	1.83	390	G	38.2	2.2	2.3	0.74	70.0%	0.034	20
90 S/4	1.50	1.10	1660	4.84	2.42	490	G	57.0	2.5	2.8	0.78	73.0%	0.056	26
90 L/4	2.00	1.50	1660	6.34	3.17	510	H	75.9	2.5	2.8	0.80	74.0%	0.074	31
100 L/4*	3.00	2.20	1745	8.4	4.2	610	H	108	1.6	2.9	0.78	81.5	0.107	58
100 LA/4*	4.00	3.00	1750	11.4	5.7	640	J	144	1.8	2.8	0.78	84.5	0.149	63
132 S/4	7.50	5.50	1735	19.8	9.90	540	G	272	2.4	2.7	0.82	85.0%	0.570	97
132 M/4	10.00	7.50	1735	25.8	12.9	630	H	363	2.9	3.2	0.84	87.0%	0.759	121
160 M/4	15.00	11.00	1770	35.8	17.9	820	J	534	2.9	3.8	0.85	90.7%	1.19	172
160 L/4	20.00	15.00	1760	48.4	24.2	850	K	716	2.9	3.9	0.87	89.4%	1.59	205
180 MX/4	25.00	18.50	1760	59.0	29.5	880	K	895	3.4	4.3	0.87	90.5%	1.90	236
180 LX/4	30.00	22.00	1765	74.4	37.2	890	K	1071	3.6	4.4	0.80	92.8%	2.18	269
200 LX/4	40.00	30.00	1770	98.6	49.3	690	H	1424	3.2	3.6	0.83	92.1%	3.80	342

* ASAB series

Send Quote Requests to info@automatedpt.com
Call +1(800)985-6929 To Order or Order Online At Nordgearmotors.com

2-Speed Single-Winding 4-2 Pole - 230V - 60Hz

Induction motor / TEFC
Synchronous speed 1800/3600rpm @ 60Hz / 4-2 Pole / Three-phase
Voltage: 230V - 60Hz / 1.0 Service factor
Continuous duty / 40°C ambient / Up to 3300ft elevation
Class B temperature rise / Class F insulation

Motor Type	Motor Power P_n [hp]	Motor Power P_n [kW]	Output Speed n_n [rpm]	Full Load Current I_n 230V [A]	Locked Rotor Current Ratio I_a/I_n [%]	NEMA Code Letter	Full Load Torque T_n [lb-in]	Locked Rotor Torque Ratio T_a/T_n	Break Down Torque Ratio T_k/T_n	Power Factor pf	Eff. η [%]	Rotor Inertia J_m [lb-ft²]	Weight [lb]
63 S/4-2 CUS	0.13	0.10	1700	1.28	240	J	4.97	3.8	3.9	0.58	33.8	0.0050	7.9
	0.20	0.15	3410	1.46	260		3.72	3.3	4.0	0.68	37.9		
63 L/4-2 CUS	0.20	0.15	1680	1.90	220	K	7.55	3.3	3.4	0.57	34.8	0.0066	9.3
	0.25	0.19	3420	1.90	290		4.70	3.6	4.3	0.66	38.0		
71 S/4-2 CUS	0.28	0.21	1690	1.32	350	G	10.5	2.4	2.5	0.73	54.7	0.017	12
	0.37	0.28	3335	1.60	360		6.99	2.8	3.0	0.86	51.1		
71 L/4-2 CUS	0.40	0.30	1660	1.96	320	G	15.3	2.3	2.3	0.75	51.2	0.020	14
	0.60	0.45	3260	2.60	330		11.7	1.7	2.0	0.88	49.4		
80 S/4-2 CUS	0.65	0.48	1670	2.60	310	G	24.5	1.9	2.2	0.77	60.2	0.026	18
	0.82	0.60	3340	3.32	350		15.5	2.2	2.2	0.82	55.3		
80 L/4-2 CUS	0.95	0.70	1625	3.68	310	G	36.8	1.8	1.9	0.79	60.4	0.033	20
	1.15	0.85	3325	4.68	350		21.8	2.2	2.3	0.80	57.0		
90 S/4-2 CUS	1.50	1.10	1680	5.36	390	G	55.3	1.7	2.3	0.84	61.3	0.056	26
	1.90	1.40	3335	7.00	390		35.5	1.8	2.3	0.88	57.1		
90 L/4-2 CUS	2.00	1.50	1655	7.00	370	G	76.6	2.2	2.4	0.81	66.4	0.074	31
	2.50	1.90	3330	9.40	400		48.2	2.6	2.5	0.82	61.9		
100 L/4-2 CUS	2.70	2.00	1680	9.20	350	G	101	2.1	2.4	0.75	72.8	0.107	40
	3.20	2.40	3395	11.0	440		59.7	2.4	2.6	0.85	64.4		
100 LA/4-2 CUS	3.50	2.60	1655	11.2	350	G	133	1.8	2.1	0.87	66.7	0.142	46
	4.20	3.10	3390	13.4	450		77.3	2.1	2.3	0.88	65.9		
112 M/4-2 CUS	5.00	3.70	1750	13.8	520	J	179	2.0	2.7	0.82	82.1	0.261	71
	5.90	4.40	3505	16.4	650		106	2.5	3.1	0.81	83.1		
132 S/4-2 CUS	6.30	4.70	1760	18.6	470	H	226	2.1	2.8	0.84	75.5	0.570	97
	7.90	5.90	3485	24	560		143	2.5	3.0	0.88	70.1		
132 M/4-2 CUS	8.70	6.50	1740	26	510	J	316	2.4	2.9	0.83	75.6	0.759	121
	10.70	8.00	3500	36	590		193	3.2	5.9	0.79	70.6		

Send Quote Requests to info@automatedpt.com
Call +1(800)985-6929 To Order or Order Online At Nordgearmotors.com

2-Speed Single-Winding 4-2 Pole - 460V - 60Hz

Induction motor / TEFC
Synchronous speed 1800/3600rpm @ 60Hz / 4-2 Pole / Three-phase
Voltage: 460V - 60Hz / 1.0 Service factor
Continuous duty / 40°C ambient / Up to 3300ft elevation
Class B temperature rise / Class F insulation

Motor Type	Motor Power P_n [hp]	Motor Power P_n [kW]	Output Speed n_n [rpm]	Full Load Current I_n 460V [A]	Locked Rotor Current Ratio I_a/I_n [%]	NEMA Code Letter	Full Load Torque T_n [lb-in]	Locked Rotor Torque Ratio T_a/T_n	Break Down Torque Ratio T_k/T_n	Power Factor pf	Eff. η [%]	Rotor Inertia J_m [lb-ft²]	Weight [lb]
63 S/4-2 CUS	0.13	0.10	1700	0.64	240	J	4.97	3.8	3.9	0.58	33.8	0.005	7.9
	0.20	0.15	3410	0.73	260		3.72	3.3	4.0	0.68	37.9		
63 L/4-2 CUS	0.20	0.15	1680	0.95	220	K	7.55	3.3	3.4	0.57	34.8	0.007	9.3
	0.25	0.19	3420	0.95	290		4.70	3.6	4.3	0.66	38.0		
71 S/4-2 CUS	0.28	0.21	1690	0.66	350	G	10.5	2.4	2.5	0.73	54.7	0.017	12
	0.37	0.28	3335	0.80	360		6.99	2.8	3.0	0.86	51.1		
71 L/4-2 CUS	0.40	0.30	1660	0.98	320	G	15.3	2.3	2.3	0.75	51.2	0.020	14
	0.60	0.45	3260	1.30	330		11.7	1.7	2.0	0.88	49.4		
80 S/4-2 CUS	0.65	0.48	1670	1.30	310	G	24.5	1.9	2.2	0.77	60.2	0.026	18
	0.82	0.60	3340	1.66	350		15.5	2.2	2.2	0.82	55.3		
80 L/4-2 CUS	0.95	0.70	1625	1.84	310	G	36.8	1.8	1.9	0.79	60.4	0.033	20
	1.15	0.85	3325	2.34	350		21.8	2.2	2.3	0.8	57.0		
90 S/4-2 CUS	1.50	1.10	1680	2.68	390	G	55.3	1.7	2.3	0.84	61.3	0.056	26
	1.90	1.40	3335	3.50	390		35.5	1.8	2.3	0.88	57.1		
90 L/4-2 CUS	2.00	1.50	1655	3.50	370	G	76.6	2.2	2.4	0.81	66.4	0.074	31
	2.50	1.90	3330	4.70	400		48.2	2.6	2.5	0.82	61.9		
100 L/4-2 CUS	2.70	2.00	1680	4.60	350	G	101	2.1	2.4	0.75	72.8	0.107	40
	3.20	2.40	3395	5.50	440		59.7	2.4	2.6	0.85	64.4		
100 LA/4-2 CUS	3.50	2.60	1655	5.60	350	G	133	1.8	2.1	0.87	66.7	0.142	46
	4.20	3.10	3390	6.70	450		77.3	2.1	2.3	0.88	65.9		
112 M/4-2 CUS	5.00	3.70	1750	6.90	520	J	179	2.0	2.7	0.82	82.1	0.261	71
	5.90	4.40	3505	8.20	650		106	2.5	3.1	0.81	83.1		
132 S/4-2 CUS	6.30	4.70	1760	9.30	470	H	226	2.1	2.8	0.84	75.5	0.570	97
	7.90	5.90	3485	12.0	560		143	2.5	3.0	0.88	70.1		
132 M/4-2 CUS	8.70	6.50	1740	13.0	510	J	316	2.4	2.9	0.83	75.6	0.759	121
	10.70	8.00	3500	18.0	590		193	3.2	5.9	0.79	70.6		

Send Quote Requests to info@automatedpt.com
Call +1(800)985-6929 To Order or Order Online At Nordgearmotors.com

2-Speed Dual-Winding 8-2 Pole - 230V - 60Hz

Induction motor / TEFC
Synchronous speed 900/3600rpm @ 60Hz / 8-2 Pole / Three-phase
Voltage: 230V - 60Hz / 1.0 Service factor
S3-40% / 40°C ambient / Up to 3300ft elevation
Class B temperature rise / Class F insulation

Motor Type	Motor Power P_n [hp]	Motor Power P_n [kW]	Output Speed n_n [rpm]	Full Load Current I_n 230V [A]	Locked Rotor Current Ratio I_a/I_n [%]	NEMA Code Letter	Full Load Torque T_n [lb-in]	Locked Rotor Torque Ratio T_a/T_n	Break Down Torque Ratio T_k/T_n	Power Factor pf	Eff. η [%]	Rotor Inertia J_m [lb-ft²]	Weight [lb]
71 S/8-2 WU	0.06	0.05	820	0.86	170	B	4.64	2.3	2.2	0.52	25.3	0.017	12
	0.30	0.22	3250	0.98	250		5.75	1.4	1.3	0.87	64.8		
71 L/8-2 WU	0.08	0.06	820	1.00	190	D	6.20	2.4	2.4	0.54	27.9	0.020	14
	0.40	0.30	3260	1.36	300		7.79	2.0	2.1	0.89	62.3		
80 S/8-2 WU	0.13	0.10	825	1.36	180	E	10.3	1.7	1.5	0.50	37.0	0.026	18
	0.60	0.45	3350	2.50	300		11.3	1.4	1.8	0.71	63.7		
80 L/8-2 WU	0.17	0.13	650	1.52	180	G	16.9	1.4	1.8	0.69	31.2	0.036	20
	0.74	0.55	3110	2.66	400		15.0	2.0	1.8	0.88	59.1		
90 S/8-2 WU	0.27	0.20	830	2.04	230	H	20.4	2.2	2.2	0.50	49.3	0.055	26
	1.10	0.80	3400	4.18	440		19.9	3.2	3.0	0.71	67.7		
90 L/8-2 WU	0.40	0.30	815	2.42	180	F	31.2	2.0	1.4	0.53	58.8	0.074	31
	1.60	1.20	3410	5.30	420		29.7	3.3	2.5	0.76	74.9		
100 L/8-2 WU	0.54	0.40	845	3.18	240	F	40.0	1.8	2.1	0.51	62.0	0.107	40
	2.10	1.60	3425	6.24	460		39.5	2.4	2.5	0.84	76.7		
100 LA/8-2 WU	0.74	0.55	845	4.24	240	E	55.1	1.5	1.9	0.49	66.5	0.142	46
	3.00	2.20	3445	8.34	440		54.0	2.1	2.2	0.81	81.8		
112 M/8-2 WU	1.00	0.75	850	5.70	330	G	74.6	2.9	2.4	0.47	70.4	0.282	66
	4.00	3.00	3495	10.9	570		72.6	2.5	3.3	0.82	84.7		
132 S/8-2 WU	1.30	1.00	865	6.68	290	F	97.7	2.6	2.3	0.53	71.0	0.553	97
	5.40	4.00	3470	13.7	520		97.4	2.9	2.4	0.91	80.8		
132 M/8-2 WU	1.90	1.40	860	9.16	360	E	138	2.5	2.2	0.53	72.5	0.752	121
	7.40	5.50	3455	18.1	470		135	2.9	2.4	0.93	81.9		

Send Quote Requests to info@automatedpt.com
Call +1(800)985-6929 To Order or Order Online At Nordgearmotors.com

2-Speed Dual-Winding 8-2 Pole - 460V - 60Hz

Induction motor / TEFC
Synchronous speed 900/3600rpm @ 60Hz / 8-2 Pole / Three-phase
Voltage: 460V - 60Hz / 1.0 Service factor
S3-40% / 40°C ambient / Up to 3300ft elevation
Class B temperature rise / Class F insulation

Motor Type	Motor Power P_n [hp]	Motor Power P_n [kW]	Output Speed n_n [rpm]	Full Load Current I_n 460V [A]	Locked Rotor Current Ratio I_a/I_n [%]	NEMA Code Letter	Full Load Torque T_n [lb-in]	Locked Rotor Torque Ratio T_a/T_n	Break Down Torque Ratio T_k/T_n	Power Factor pf	Eff. η [%]	Rotor Inertia J_m [lb-ft²]	Weight [lb]
71 S/8-2 WU	0.06	0.05	820	0.43	170	B	4.64	2.3	2.2	0.52	25.3	0.017	12
	0.30	0.22	3250	0.49	250		5.72	1.4	1.3	0.87	64.8		
71 L/8-2 WU	0.08	0.06	820	0.5	190	D	6.18	2.4	2.4	0.54	27.9	0.020	14
	0.40	0.30	3260	0.68	300		7.78	2.0	2.1	0.89	62.3		
80 S/8-2 WU	0.13	0.10	825	0.68	180	E	10.2	1.7	1.5	0.50	37.0	0.026	18
	0.60	0.45	3350	1.25	300		11.4	1.4	1.8	0.71	63.7		
80 L/8-2 WU	0.17	0.13	650	0.76	180	G	16.9	1.4	1.8	0.69	31.2	0.036	20
	0.74	0.55	3110	1.33	400		14.9	2.0	1.8	0.88	59.1		
90 S/8-2 WU	0.27	0.20	830	1.02	230	H	20.4	2.2	2.2	0.50	49.3	0.055	26
	1.10	0.80	3400	2.09	440		19.9	3.2	3.0	0.71	67.7		
90 L/8-2 WU	0.40	0.30	815	1.21	180	F	31.1	2.0	1.4	0.53	58.8	0.074	31
	1.60	1.20	3410	2.65	420		29.7	3.3	2.5	0.76	74.9		
100 L/8-2 WU	0.54	0.40	845	1.59	240	F	40.0	1.8	2.1	0.51	62.0	0.107	40
	2.10	1.60	3425	3.12	460		39.5	2.4	2.5	0.84	76.7		
100 LA/8-2 WU	0.74	0.55	845	2.12	240	E	55.0	1.5	1.9	0.49	66.5	0.142	46
	3.00	2.20	3445	4.17	440		54.0	2.1	2.2	0.81	81.8		
112 M/8-2 WU	1.00	0.75	850	2.85	330	G	74.6	2.9	2.4	0.47	70.4	0.282	66
	4.00	3.00	3495	5.43	570		72.5	2.5	3.3	0.82	84.7		
132 S/8-2 WU	1.30	1.00	865	3.34	290	F	97.7	2.6	2.3	0.53	71.0	0.553	97
	5.40	4.00	3470	6.84	520		97.4	2.9	2.4	0.91	80.8		
132 M/8-2 WU	1.90	1.40	860	4.58	360	E	138	2.5	2.2	0.53	72.5	0.752	121
	7.40	5.50	3455	9.07	470		135	2.9	2.4	0.93	81.9		

Send Quote Requests to info@automatedpt.com
Call +1(800)985-6929 To Order or Order Online At Nordgearmotors.com

115/230V - 60Hz Single Phase Start Capacitor & Run Capacitor

TEFC
Synchronous speed 1800rpm @ 60Hz / 4-pole / Single-phase
Voltage: 115/230V - 60Hz
Continuous duty / 40°C ambient / Up to 3300ft elevation
Class B temperature rise / Class F insulation

Motor Type	Motor Power P_n [hp]	Motor Power P_n [kW]	Service Factor SF	Output Speed n_n [rpm]	Full Load Current I_n 115V [A]	Locked Rotor Current Ratio I_a/I_n [%]	Full Load Torque T_n [lb-in]	Locked Rotor Torque Ratio T_a/T_n	Break Down Torque Ratio T_k/T_n	Power Factor pf cos φ	Rotor Inertia J_m [lb-ft²]	Weight [lb]
63 LA/4 ECR	0.16	0.12	1.35	1740	3.3	340	5.80	2.5	3.5	0.66	0.0083	11
71 L/4 ECR	0.25	0.18	1.35	1760	3.46	450	8.95	2.1	3.3	0.89	0.0204	15
71 LA/4 ECR	0.33	0.25	1.35	1750	5.4	450	11.9	2.1	3	0.69	0.027	18
80 L/4 ECR	0.50	0.37	1.35	1765	6.55	560	17.9	2.4	3.4	0.80	0.034	21
80 LA/4 ECR	0.75	0.55	1.35	1760	9.4	510	26.9	2.6	2.9	0.71	0.046	23
90 L/4 ECR	1.00	0.75	1.35	1770	11.85	630	35.6	2.3	2.9	0.79	0.074	32
90 LB/4 ECR	1.50	1.10	1.35	1765	15.25	570	53.6	2	2.8	0.85	0.093	38
90 LX/4 ECR	-	-	-	-	-	-	-	-	-	-	-	-

Motor Type	Motor Power P_n [hp]	Motor Power P_n [kW]	Service Factor SF	Output Speed n_n [rpm]	Full Load Current I_n 230V [A]	Locked Rotor Current Ratio I_a/I_n [%]	Full Load Torque T_n [lb-in]	Locked Rotor Torque Ratio T_a/T_n	Break Down Torque Ratio T_k/T_n	Power Factor pf cos φ	Rotor Inertia J_m [lb-ft²]	Weight [lb]
63 LA/4 ECR	0.16	0.12	1.35	1740	1.57	360	5.80	2.5	3.6	0.70	0.0083	11
71 L/4 ECR	0.25	0.18	1.35	1750	1.89	520	9.00	2.4	3.3	0.92	0.0204	15
71 LA/4 ECR	0.33	0.25	1.35	1750	2.65	470	11.9	2.2	2.9	0.71	0.027	18
80 L/4 ECR	0.50	0.37	1.35	1765	3.4	570	17.9	2.2	3.3	0.79	0.034	21
80 LA/4 ECR	0.75	0.55	1.35	1760	4.7	520	26.9	2.7	2.8	0.72	0.046	23
90 L/4 ECR	1.00	0.75	1.35	1770	5.94	680	35.6	2.3	3.1	0.78	0.074	32
90 LB/4 ECR	1.50	1.10	1.35	1760	7.62	650	53.7	2.1	2.9	0.84	0.093	38
90 LX/4 ECR	2.00	1.50	1.20	1735	10.4	520	72.7	1.5	2.3	0.83	0.093	38

Send Quote Requests to info@automatedpt.com
Call +1(800)985-6929 To Order or Order Online At Nordgearmotors.com

Premium Efficiency
575V - 60Hz

Induction motor / TEFC
Synchronous speed 1800rpm @ 60Hz / 4-pole / Three-phase
Voltage: 332/575V - 60Hz / 1.15 Service factor
Continuous duty / 40°C ambient / Up to 3300ft elevation
Class B temperature rise / Class F insulation

Motor Type	Motor Power P_n [hp]	Motor Power P_n [kW]	Output Speed n_n [rpm]	Full Load Current I_n 575V [A]	Locked Rotor Current Ratio I_a/I_n [%]	NEMA Code Letter	Full Load Torque T_n [lb-in]	Locked Rotor Torque Ratio T_a/T_n	Break Down Torque Ratio T_k/T_n	Power Factor pf	Eff. η [%]	Rotor Inertia J_m [lb-ft²]	Weight [lb]
63 SP/4	0.16	0.12	1695	0.29	400	J	5.95	3.4	3.3	0.62	68.1	0.0057	8.4
63 LP/4	0.25	0.18	1705	0.43	430	J	9.24	4.1	3.9	0.57	72.5	0.0078	10
71 SP/4	0.33	0.25	1725	0.50	590	K	12.1	3.7	3.9	0.67	75.8	0.020	13
71 LP/4	0.50	0.37	1725	0.65	610	J	18.3	3.3	3.6	0.72	78.0	0.026	16
80 SP/4	0.75	0.55	1735	0.92	610	J	27.2	2.8	3.3	0.72	82.7	0.034	21
80 LP/4	1.00	0.75	1730	1.26	650	K	36.4	3.5	3.8	0.70	86.1	0.045	22
90 SP/4	1.50	1.10	1740	1.68	840	L	54.3	4.2	4.9	0.76	86.9	0.081	33
90 LP/4	2.00	1.50	1730	2.24	760	K	72.9	3.9	4.3	0.78	87.0	0.093	37
100 LP/4*	3.00	2.20	1765	3.28	960	M	107	3.7	4.9	0.75	90.3	0.176	54
100 AP/4*	4.00	3.00	1760	4.34	875	L	143	3.6	4.5	0.79	90.3	0.204	60
112 MP/4	5.00	3.70	1755	5.20	950	L	180	4.1	4.6	0.80	90.3	0.33	78
132 SP/4	7.50	5.50	1770	7.80	1020	M	267	4.7	5.0	0.77	91.7	0.76	121
132 MP/4	10.00	7.50	1765	10.7	960	M	357	4.7	5.0	0.77	91.7	0.83	137
160 MP/4	15.00	11.00	1770	14.2	880	K	534	3.2	3.8	0.84	92.5	1.59	205
160 LP/4	20.00	15.00	1775	19.0	1080	M	710	4.3	4.7	0.85	93.0	2.18	269
180 MP/4	25.00	18.50	1780	24.2	1010	L	885	3.9	4.0	0.82	93.6	3.80	342
180 LP/4	30.00	22.00	1780	27.8	880	K	1062	3.3	3.4	0.85	93.6	3.80	342
225 RP/4	40.00	30.00	1785	39.6	890	K	1412	3.4	3.8	0.81	94.5	11.6	694
225 SP/4	50.00	37.00	1785	47.8	880	K	1765	3.0	3.7	0.82	94.6	12.8	728
225 MP/4	60.00	45.00	1785	57.6	910	K	2118	3.3	3.6	0.83	95.2	15.9	805
250 WP/4	75.00	55.00	1785	67.5	920	J	2648	2.9	3.2	0.86	95.4	19.5	882

* APAB series

Send Quote Requests to info@automatedpt.com
Call +1(800)985-6929 To Order or Order Online At Nordgearmotors.com

Standard Efficiency
575V - 60Hz

Induction motor / TEFC
Synchronous speed 1800rpm @ 60Hz / 4-pole / Three-phase
Voltage: 332/575V - 60Hz / 1.15 Service factor
60-Minute duty / 40°C ambient / Up to 3300ft elevation
Class B temperature rise / Class F insulation

Motor Type	Motor Power P_n [hp]	Motor Power P_n [kW]	Output Speed n_n [rpm]	Full Load Current I_n 575V [A]	Locked Rotor Current Ratio I_a/I_n [%]	NEMA Code Letter	Full Load Torque T_n [lb-in]	Locked Rotor Torque Ratio T_a/T_n	Break Down Torque Ratio T_k/T_n	Power Factor pf	Eff. η [%]	Rotor Inertia J_m [lb-ft²]	Weight [lb]
80 L/4	1.00	0.75	1650	1.46	390	G	38.2	2.2	2.3	0.74	70.0	0.034	20
90 S/4	1.50	1.10	1660	1.94	490	H	57.0	2.5	2.8	0.78	73.0	0.056	26
90 L/4	2.00	1.50	1660	2.54	510	H	75.9	2.5	2.8	0.80	74.0	0.074	31
100 L/4*	3.00	2.20	1745	3.35	610	H	108	1.6	2.9	0.78	81.5	0.107	58
100 LA/4*	4.00	3.00	1750	4.55	640	J	144	1.8	2.8	0.78	84.5	0.149	63
132 S/4	7.50	5.50	1735	7.92	540	G	272	2.4	2.7	0.82	85.0	0.57	97
132 M/4	10.00	7.50	1735	10.3	630	H	363	2.9	3.2	0.84	87.0	0.76	121
160 M/4	15.00	11.00	1770	14.5	820	J	534	2.9	3.8	0.85	90.7	1.19	172
160 L/4	20.00	15.00	1760	19.3	850	K	716	2.9	3.9	0.87	89.4	1.59	205
180 MX/4	25.00	18.50	1760	23.6	880	K	895	3.4	4.3	0.87	90.5	1.90	236
180 LX/4	30.00	22.00	1765	29.8	890	K	1071	3.6	4.4	0.80	92.8	2.18	269
200 LX/4	40.00	30.00	1770	39.4	690	H	1424	3.2	3.6	0.83	92.1	3.80	342

* ASAB series

Send Quote Requests to info@automatedpt.com
Call +1(800)985-6929 To Order or Order Online At Nordgearmotors.com

2-Speed Single-Winding 4-2 Pole - 575V - 60Hz

Induction motor / TEFC
Synchronous speed 1800/3600rpm @ 60Hz / 4-2 pole / Three-phase
Voltage: 575V - 60Hz / 1.0 Service factor
Continuous duty / 40°C ambient / Up to 3300ft elevation
Class B temperature rise / Class F insulation

Motor Type	Motor Power P_n [hp]	Motor Power P_n [kW]	Output Speed n_n [rpm]	Full Load Current I_n 575V [A]	Locked Rotor Current Ratio I_a/I_n [%]	NEMA Code Letter	Full Load Torque T_n [lb-in]	Locked Rotor Torque Ratio T_a/T_n	Break Down Torque Ratio T_k/T_n	Power Factor pf	Eff. η [%]	Rotor Inertia J_m [lb-ft²]	Weight [lb]
63 S/4-2	0.13	0.10	1700	0.53	240	J	4.97	3.8	3.9	0.58	33.8	0.0050	7.9
	0.20	0.15	3410	0.61	260		3.72	3.3	4.0	0.68	37.9		
63 L/4-2	0.20	0.15	1680	0.76	220	K	7.55	3.3	3.4	0.57	34.8	0.0066	9.3
	0.25	0.19	3420	0.76	290		4.70	3.6	4.3	0.66	38.0		
71 S/4-2	0.28	0.21	1690	0.55	350	H	10.5	2.4	2.5	0.73	54.7	0.017	12
	0.37	0.28	3335	0.67	360		6.99	2.8	3.0	0.86	51.1		
71 L/4-2	0.40	0.30	1660	0.82	320	G	15.3	2.3	2.3	0.75	51.2	0.020	14
	0.60	0.45	3260	1.09	330		11.7	1.7	2.0	0.88	49.4		
80 S/4-2	0.65	0.48	1670	1.09	310	G	24.5	1.9	2.2	0.77	60.2	0.026	18
	0.82	0.60	3340	1.39	350		15.5	2.2	2.2	0.82	55.3		
80 L/4-2	0.95	0.70	1625	1.54	310	G	36.8	1.8	1.9	0.79	60.4	0.033	20
	1.15	0.85	3325	1.95	350		21.8	2.2	2.3	0.80	57.0		
90 S/4-2	1.5	1.1	1680	2.24	390	G	55.3	1.7	2.3	0.84	61.3	0.056	26
	1.9	1.4	3335	2.92	390		35.5	1.8	2.3	0.88	57.1		
90 L/4-2	2.0	1.5	1655	2.92	370	G	76.6	2.2	2.4	0.81	66.4	0.074	31
	2.5	1.9	3330	3.92	400		48.2	2.6	2.5	0.82	61.9		
100 L/4-2	2.7	2.0	1680	3.85	350	G	101	2.1	2.4	0.75	72.8	0.11	40
	3.2	2.4	3395	4.60	440		59.7	2.4	2.6	0.85	64.4		
100 LA/4-2	3.5	2.6	1655	4.70	350	G	133	1.8	2.1	0.87	66.7	0.14	46
	4.2	3.1	3390	5.60	450		77.3	2.1	2.3	0.88	65.9		
112 M/4-2	5.0	3.7	1750	6.60	520	K	179	2.0	2.7	0.82	82.1	0.26	71
	5.9	4.4	3505	8.00	650		106	2.5	3.1	0.81	83.1		
132 S/4-2	6.3	4.7	1760	7.80	470	H	226	2.1	2.8	0.84	75.5	0.57	97
	7.9	5.9	3485	10.0	560		143	2.5	3.0	0.88	70.1		
132 M/4-2	8.7	6.5	1740	10.9	510	K	316	2.4	2.9	0.83	75.6	0.76	121
	10.7	8.0	3500	15.0	590		193	3.2	5.9	0.79	70.6		

Send Quote Requests to info@automatedpt.com
Call +1(800)985-6929 To Order or Order Online At Nordgearmotors.com

2-Speed Dual-Winding 8-2 Pole - 575V - 60Hz

Induction motor / TEFC
Synchronous speed 900/3600rpm @ 60Hz / 8-2-pole / Three-phase
Voltage: 230/460V - 60Hz / 1.0 Service factor
S3–40% / 40°C ambient / Up to 3300ft elevation
Class B temperature rise / Class F insulation

Motor Type	Motor Power P_n [hp]	Motor Power P_n [kW]	Output Speed n_n [rpm]	Full Load Current I_n 575V [A]	Locked Rotor Current Ratio I_a/I_n [%]	NEMA Code Letter	Full Load Torque T_n [lb-in]	Locked Rotor Torque Ratio T_a/T_n	Break Down Torque Ratio T_k/T_n	Power Factor pf	Eff. η [%]	Rotor Inertia J_m [lb-ft²]	Weight [lb]
71 S/8-2 WU	0.06	0.05	820	0.36	170	B	4.64	2.3	2.2	0.52	25.3	0.017	12
	0.30	0.22	3250	0.40	250		5.72	1.4	1.3	0.87	64.8		
71 L/8-2 WU	0.08	0.06	820	0.44	190	D	6.18	2.4	2.4	0.54	27.9	0.020	14
	0.40	0.30	3260	0.55	300		7.78	2.0	2.1	0.89	62.3		
80 S/8-2 WU	0.13	0.10	825	0.59	180	F	10.2	1.7	1.5	0.50	37.0	0.026	18
	0.60	0.45	3350	1.12	300		11.4	1.4	1.8	0.71	63.7		
80 L/8-2 WU	0.17	0.13	650	0.65	180	J	16.9	1.4	1.8	0.69	31.2	0.036	20
	0.74	0.55	3110	1.32	400		14.9	2.0	1.8	0.88	59.1		
90 S/8-2 WU	0.27	0.20	830	0.88	230	J	20.4	2.2	2.2	0.50	49.3	0.055	26
	1.10	0.80	3400	1.90	440		19.9	3.2	3.0	0.71	67.7		
90 L/8-2 WU	0.40	0.30	815	1.04	180	G	31.1	2.0	1.4	0.53	58.8	0.074	31
	1.60	1.20	3410	2.41	420		29.7	3.3	2.5	0.76	74.9		
100 L/8-2 WU	0.54	0.40	845	1.40	240	G	40.0	1.8	2.1	0.51	62.0	0.11	40
	2.10	1.60	3425	2.70	460		39.5	2.4	2.5	0.84	76.7		
100 LA/8-2 WU	0.74	0.55	845	1.83	240	F	55.0	1.5	1.9	0.49	66.5	0.14	46
	3.00	2.20	3445	3.64	440		54.0	2.1	2.2	0.81	81.8		
112 M/8-2 WU	1.00	0.75	850	2.48	330	H	74.6	2.9	2.4	0.47	70.4	0.28	66
	4.00	3.00	3495	4.73	570		72.5	2.5	3.3	0.82	84.7		
132 S/8-2 WU	1.30	1.00	865	2.87	290	F	97.7	2.6	2.3	0.53	71.0	0.55	97
	5.40	4.00	3470	5.61	520		97.4	2.9	2.4	0.91	80.8		
132 M/8-2 WU	1.90	1.40	860	3.89	360	E	138	2.5	2.2	0.53	72.5	0.75	121
	7.40	5.50	3455	7.33	470		135	2.9	2.4	0.93	81.9		

Send Quote Requests to info@automatedpt.com
Call +1(800)985-6929 To Order or Order Online At Nordgearmotors.com

Premium Efficiency 400V - 50Hz

Inverter duty / Induction motor / TEFC
Synchronous speed 1500rpm @ 50Hz / 4-pole / Three-phase
Voltage: 400V - 50Hz / 1.0 Service factor
Continuous duty / 40°C ambient / Up to 3300ft elevation
Class B temperature rise / Class F insulation

Motor Type	Motor Power P_n		Output Speed n_n	Full Load Current I_n 400V	Locked Rotor Current Ratio I_a/I_n	NEMA Code Letter	Full Load Torque T_n	Locked Rotor Torque Ratio T_a/T_n	Break Down Torque Ratio T_k/T_n	Power Factor pf	Eff. η	Rotor Inertia J_m	Weight
	[hp]	[kW]	[rpm]	[A]	[%]		[lb-in]				[%]	[lb-ft²]	[lb]
63 SP/4	0.16	0.12	1370	0.39	330	G	7.36	2.7	2.6	0.66	66.4	0.0057	8.4
63 LP/4	0.25	0.18	1385	0.59	360	G	11.4	3.3	3.1	0.62	69.9	0.0078	10
71 SP/4	0.33	0.25	1415	0.70	490	J	14.7	3.2	3.2	0.71	73.5	0.020	13
71 LP/4	0.50	0.37	1405	0.91	500	H	22.4	2.8	2.8	0.76	77.3	0.026	16
80 SP/4	0.75	0.55	1420	1.29	510	G	33.3	2.6	2.8	0.75	81.1	0.034	21
80 LP/4	1.00	0.75	1415	1.79	540	H	44.5	3.0	3.1	0.72	83.7	0.045	22
90 SP/4	1.50	1.10	1430	2.38	680	J	66.1	3.6	4.0	0.78	85.3	0.081	33
90 LP/4	2.00	1.50	1415	3.23	590	H	89.1	3.3	3.5	0.79	85.3	0.093	37
100 LP/4*	3.00	2.20	1460	4.68	790	K	127	3.6	4.2	0.76	89.0	0.18	54
100 AP/4*	4.00	3.00	1450	6.26	700	J	175	3.2	3.6	0.80	88.5	0.20	60
112 MP/4	5.40	4.00	1440	7.85	740	J	236	3.3	3.5	0.83	88.6	0.33	78
132 SP/4	7.50	5.50	1465	10.9	860	K	323	3.9	4.1	0.80	90.9	0.76	121
132 MP/4	10.00	7.50	1460	15.7	750	K	432	3.9	4.2	0.77	90.4	0.83	137
160 SP/4	12.00	9.20	1470	16.7	810	J	514	2.9	3.3	0.88	91.0	1.59	205
160 MP/4	15.00	11.00	1465	20.5	740	J	645	2.9	3.4	0.85	91.4	1.59	205
160 LP/4	20.00	15.00	1465	27.9	910	K	860	3.8	4.3	0.85	92.3	2.18	269
180 MP/4	25.00	18.50	1480	34.0	920	K	1065	3.4	3.8	0.84	93.1	3.80	342
180 LP/4	30.00	22.00	1475	39.3	800	J	1282	2.8	3.2	0.87	93.1	3.80	342
225 RP/4	40.00	30.00	1485	56.2	780	J	1707	3.0	3.4	0.82	94.1	11.63	694
225 SP/4	50.00	37.00	1485	68.2	770	J	2106	2.9	3.2	0.83	94.1	12.81	728
225 MP/4	60.00	45.00	1485	81.7	800	J	2561	3.0	3.4	0.83	94.6	15.90	805
250 WP/4	75.00	55.00	1480	96.1	700	H	3141	2.6	2.8	0.87	94.6	19.46	882

Standard motors 10 hp (7.5 kw) and below are rated 230Δ / 400YΔ volts, while motors above 10 hp (7.5 kw) are rated 400Δ / 690Y volts.
* APAB series

Send Quote Requests to info@automatedpt.com
Call +1(800)985-6929 To Order or Order Online At Nordgearmotors.com

2-Speed Single-Winding 4-2 Pole - 400V - 50Hz

Induction motor / TEFC
Synchronous speed 1500/3000rpm @ 50Hz / 4-2-pole / Three-phase
Voltages: 400V - 50Hz / 1.0 Service factor
Continuous duty / 40°C ambient / Up to 3300ft elevation
Class B temperature rise / Class F insulation

Motor Type	Motor Power P_n [hp]	Motor Power P_n [kW]	Output Speed n_n [rpm]	Full Load Current I_n 400V [A]	Locked Rotor Current Ratio I_a/I_n [%]	NEMA Code Letter	Full Load Torque T_n [lb-in]	Locked Rotor Torque Ratio T_a/T_n	Break Down Torque Ratio T_k/T_n	Power Factor pf	Eff. η [%]	Rotor Inertia J_m [lb-ft²]	Weight [lb]
63 S/4-2	0.13	0.10	1415	0.64	250	H	5.97	3.3	3.6	0.58	38.9	0.0050	7.9
	0.20	0.15	2840	0.73	280		4.46	3.2	3.8	0.68	43.6		
63 L/4-2	0.20	0.15	1400	0.95	230	J	9.06	2.9	3.1	0.57	40.0	0.0066	9.3
	0.25	0.19	2850	0.95	300		5.63	3.3	3.9	0.66	43.7		
71 S/4-2	0.28	0.21	1410	0.66	360	G	12.6	2.1	2.3	0.73	62.9	0.017	12
	0.38	0.28	2780	0.80	390		8.51	2.5	2.7	0.86	58.7		
71 L/4-2	0.40	0.30	1385	0.98	330	F	18.3	2.1	2.1	0.75	58.9	0.020	14
	0.60	0.45	2715	1.30	340		14.0	1.6	1.8	0.88	56.8		
80 S/4-2	0.64	0.48	1390	1.30	330	F	29.2	1.7	1.8	0.77	69.2	0.026	18
	0.80	0.60	2785	1.66	360		18.2	1.8	2.0	0.82	63.6		
80 L/4-2	0.94	0.70	1355	1.84	330	F	43.7	1.6	1.7	0.79	69.5	0.033	20
	1.14	0.85	2770	2.34	360		25.9	2.0	2.0	0.80	65.5		
90 S/4-2	1.50	1.10	1400	2.68	390	F	66.4	1.5	2.1	0.84	70.5	0.056	26
	1.90	1.40	2780	3.50	390		42.6	1.6	2.1	0.88	65.6		
90 L/4-2	2.00	1.50	1380	3.50	390	F	91.9	2.0	2.1	0.81	76.4	0.074	31
	2.50	1.90	2775	4.70	420		57.9	2.3	2.3	0.82	71.2		
100 L/4-2	2.70	2.00	1400	4.60	370	F	121	1.8	2.0	0.75	83.7	0.11	40
	3.20	2.40	2830	5.50	450		71.7	2.0	2.2	0.85	74.1		
100 LA/4-2	3.50	2.60	1380	5.62	390	F	159	1.8	2.1	0.87	76.8	0.14	46
	4.20	3.10	2825	6.71	490		92.7	2.1	2.2	0.88	75.8		
112 M/4-2	5.00	3.70	1435	7.90	490	H	218	2.0	2.6	0.84	80.5	0.26	71
	5.90	4.40	2905	9.60	600		128	2.4	3.0	0.83	79.7		
112 MA/4-2	5.40	4.00	1455	8.72	570	J	232	2.5	3.2	0.78	84.9	0.30	71
	6.80	5.10	2900	11.9	640		149	2.8	3.3	0.77	80.3		
132 S/4-2	6.30	4.70	1465	9.30	490	G	271	1.9	2.5	0.84	86.8	0.57	97
	7.90	5.90	2905	12.0	580		172	2.3	2.7	0.88	80.6		
132 M/4-2	8.70	6.50	1450	13.0	540	J	379	2.2	2.6	0.83	87.0	0.76	121
	10.70	8.00	2915	18.0	620		232	2.6	2.9	0.79	81.2		
132 MA/4-2	9.80	7.30	1455	14.3	700	K	424	2.7	3.2	0.84	87.7	0.83	137
	12.10	9.00	2930	18.7	760		260	2.7	3.5	0.83	83.7		
160 M/4-2	12.50	9.30	1450	18.0	500	G	542	2.2	2.5	0.88	84.7	1.19	172
	15.40	11.50	2935	22.4	620		331	2.2	3.0	0.91	81.4		
160 L/4-2	17.40	13.00	1460	24.1	750	H	753	2.7	3.2	0.88	88.5	1.59	205
	22.80	17.00	2945	31.1	740		488	2.6	3.4	0.93	84.8		

Send Quote Requests to info@automatedpt.com
Call +1(800)985-6929 To Order or Order Online At Nordgearmotors.com

2-Speed Dual-Winding 8-2 Pole - 400V - 50Hz

Induction motor / TEFC
Synchronous speed 750/3000rpm @ 50Hz / 8-2-pole / Three-phase
Voltages: 400V - 50Hz / 1.0 Service factor
S3–40% / 40°C ambient / Up to 3300ft elevation
Class B temperature rise / Class F insulation

Motor Type	Motor Power P_n [hp]	Motor Power P_n [kW]	Output Speed n_n [rpm]	Full Load Current I_n 400V [A]	Locked Rotor Current Ratio I_a/I_n [%]	NEMA Code Letter	Full Load Torque T_n [lb-in]	Locked Rotor Torque Ratio T_a/T_n	Break Down Torque Ratio T_k/T_n	Power Factor pf	Eff. η [%]	Rotor Inertia J_m [lb-ft²]	Weight [lb]
71 S/8-2 WU	0.06	0.045	650	0.44	130	B	5.85	2.6	2.6	0.58	25.5	0.017	12
	0.30	0.22	2520	0.60	250		7.38	1.8	1.9	0.90	58.8		
71 L/8-2 WU	0.08	0.06	655	0.51	160	B	7.74	2.3	2.3	0.61	27.8	0.020	14
	0.40	0.30	2450	0.88	230		10.3	1.4	1.4	0.90	54.7		
80 S/8-2 WU	0.13	0.10	650	0.70	160	D	13.0	2.0	2.0	0.57	36.2	0.026	18
	0.60	0.45	2695	1.40	270		14.1	2.0	2.0	0.76	61.0		
80 L/8-2 WU	0.17	0.13	585	0.74	160	E	18.8	1.4	1.5	0.70	36.2	0.033	20
	0.74	0.55	2620	1.47	330		17.7	2.1	2.0	0.88	61.4		
90 S/8-2 WU	0.27	0.20	665	1.07	200	F	25.4	2.1	2.2	0.57	47.3	0.056	26
	1.07	0.80	2770	2.37	350		24.4	2.9	2.6	0.74	65.8		
90 L/8-2 WU	0.40	0.30	640	1.31	200	E	39.6	1.9	1.9	0.60	55.1	0.074	31
	1.60	1.20	2770	3.05	350		36.6	2.1	2.3	0.79	71.9		
100 L/8-2 WU	0.54	0.40	685	1.70	240	E	49.4	1.1	2.2	0.58	58.6	0.11	40
	2.10	1.60	2790	3.60	400		48.5	2.0	2.3	0.86	74.6		
100 LA/8-2 WU	0.74	0.55	680	2.28	250	F	68.4	2.1	2.3	0.56	62.2	0.14	46
	3.00	2.20	2810	4.87	460		66.2	2.5	2.6	0.83	78.6		
112 M/8-2 WU	1.00	0.75	695	3.05	280	G	91.2	2.3	2.6	0.53	67.0	0.26	71
	4.00	3.00	2875	6.37	560		88.2	2.3	3.3	0.83	81.9		
132 S/8-2 WU	1.30	1.00	630	4.00	260	F	134	1.8	2.0	0.53	68.1	0.57	97
	5.40	4.00	2710	8.55	480		125	2.3	2.3	0.93	72.6		
132 M/8-2 WU	1.90	1.40	700	5.10	280	F	169	1.9	2.3	0.60	66.0	0.76	121
	7.40	5.50	2835	10.6	530		164	2.3	2.5	0.93	80.5		

Send Quote Requests to info@automatedpt.com
Call +1(800)985-6929 To Order or Order Online At Nordgearmotors.com

230V - 50Hz Single Phase Start Capacitor & Run Capacitor

TEFC
Synchronous speed 1500 rpm @ 50Hz / 4-pole / Single-phase
Voltages: 230V - 50Hz / 1.0 Service factor
Continuous duty / 40°C ambient / Up to 3300ft elevation
Class B temperature rise / Class F insulation

Motor Type	Motor Power P_n [hp]	Motor Power P_n [kW]	Output Speed n_n [rpm]	Full Load Current I_n 230V [A]	Locked Rotor Current Ratio I_a/I_n [%]	Full Load Torque T_n [lb-in]	Locked Rotor Torque Ratio T_a/T_n	Break Down Torque Ratio T_k/T_n	Power Factor pf	Rotor Inertia J_m [lb-ft²]	Weight [lb]
63 L/4 EAR1	0.16	0.12	1405	1.22	320	7.18	2.3	2.3	0.95	0.0050	9.9
63 LA/4 EAR1	0.25	0.18	1405	1.71	320	11.2	2.4	2.1	0.91	0.0066	11
71 L/4 EAR1	0.33	0.25	1430	1.96	410	14.5	2.1	2.2	0.95	0.015	15
71 LA/4 EAR1	0.50	0.37	1425	2.90	460	22.1	2.1	2.2	0.90	0.018	18
80 L/4 EAR1	0.75	0.55	1440	3.87	430	32.8	2.1	2.2	0.90	0.030	21
80 LA/4 EAR1	1.00	0.75	1435	5.10	430	43.9	2.2	1.9	0.90	0.039	23
90 L/4 EAR1	1.50	1.10	1445	7.54	480	65.4	2.2	2.0	0.87	0.056	32
90 LB/4 EAR1	2.00	1.50	1425	9.02	530	88.5	2.2	1.9	0.94	0.074	38

Send Quote Requests to info@automatedpt.com
Call +1(800)985-6929 To Order or Order Online At Nordgearmotors.com

Send Quote Requests to info@automatedpt.com
Call +1(800)985-6929 To Order or Order Online At Nordgearmotors.com

Dimensions

NEMA FOOTED MOTORS 104
NEMA C-FACE MOTORS 106
NEMA C-FACE BRAKEMOTORS 112
IEC B3 FOOTED MOTORS. 118
IEC B5 FLANGED MOTORS. 120
IEC B5 FLANGED BRAKEMOTORS 126
IEC B14 FLANGED MOTORS. 132
CONDUIT BOX AND CABLE ENTRY 134

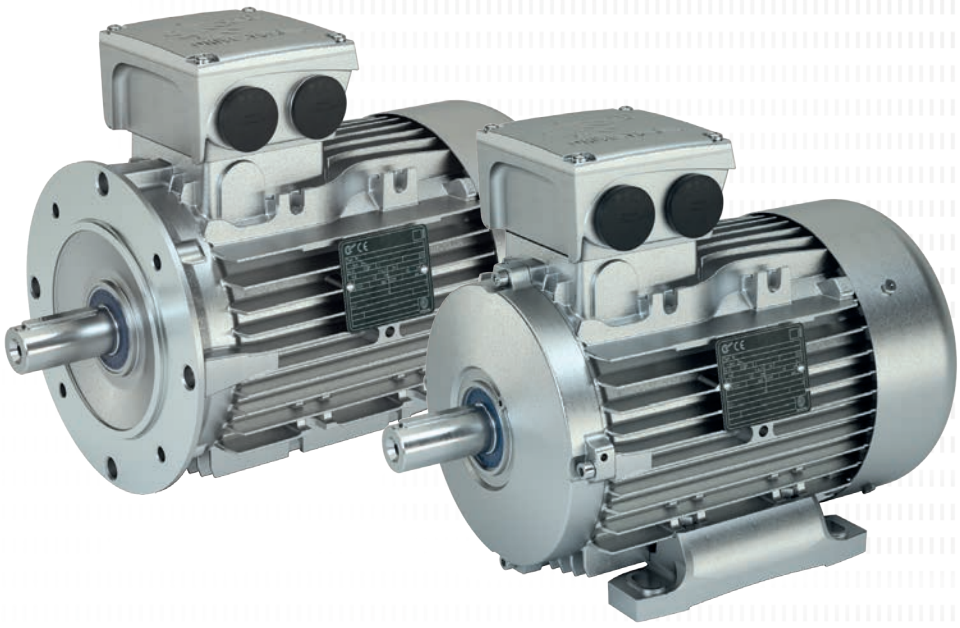

Send Quote Requests to info@automatedpt.com
Call +1(800)985-6929 To Order or Order Online At Nordgearmotors.com

NEMA Footed Motors

Standard Motor

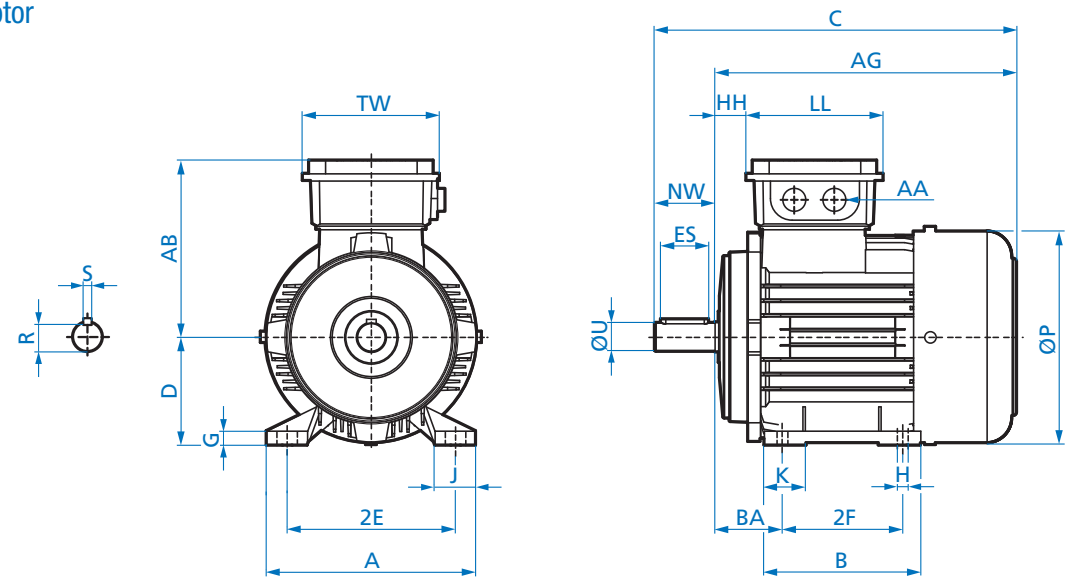

Motor Frame	Efficiency		NEMA Frame	Overall			Feet								
	SE	PE		C	AG	øP	A	B	2E	2F	BA	J	K	H	G
71	S/L	-	56	11.01	9.13	5.75	5.83	3.70	4.88	3.00	2.75	1.44	0.77	0.34	0.47
80	S	SP	56	11.51	9.63	6.46	6.06	4.02	4.88	3.00	2.75	1.26	1.04	0.34	0.55
80	L	-	56	11.51	9.63	6.46	6.06	4.02	4.88	3.00	2.75	1.26	1.04	0.347	0.55
80	-	LP	143T	11.57	9.32	6.46	6.69	5.00	5.50	4.00	2.25	1.56	1.50	0.34	0.57
90	S/L	SP/LP	145T	13.14	10.89	7.20	6.89	6.18	5.50	5.00	2.25	1.69	1.38	0.34	0.59
100	L	LP	182T	14.82	12.07	7.91	8.78	6.81	7.50	4.50	2.75	2.07	2.68	0.41	0.59
100	LA	AP	184T	14.82	12.07	7.91	8.78	6.81	7.50	5.50	2.75	2.07	2.68	0.41	0.59
112	M	-	184T	15.45	12.70	8.90	9.02	6.69	7.50	5.50	2.75	1.79	1.30	0.41	0.67
112	-	MP	184T	16.44	13.69	8.90	9.02	6.69	7.50	5.50	2.75	1.79	1.30	0.41	0.67
132	S	-	213T	18.08	14.71	10.47	10.24	7.09	8.50	5.50	3.50	2.30	1.46	0.41	0.69
132	-	SP	213T	19.58	16.20	10.47	10.24	7.09	8.50	5.50	3.50	2.30	1.46	0.41	0.69
132	M	MP	215T	19.58	16.20	10.47	10.24	8.58	8.50	7.00	3.50	2.30	1.46	0.41	0.69

Send Quote Requests to info@automatedpt.com
Call +1(800)985-6929 To Order or Order Online At Nordgearmotors.com

Standard Motor

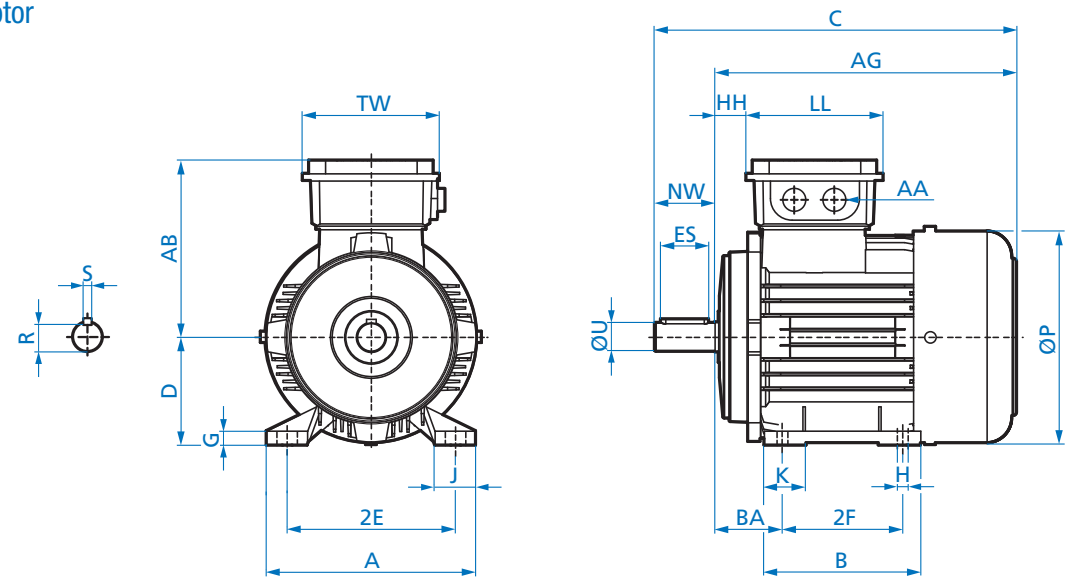

Motor Frame	Efficiency		NEMA Frame	Shaft							Terminal Box					
	SE	PE		U		NW	ES	R	S	D	AB	HH	LL	TW	AA (NPT)	AA (mm)
71	S/L	-	56	0.625	+0.000 -0.0005	1.875	1.69	0.517	0.188	3.50	4.88	1.50	3.94	3.94	1/2”	M20 x 1.5
80	S	SP	56	0.625		1.875	1.69	0.517	0.188	3.50	5.59	1.22	4.49	4.49	3/4”	M25 x 1.5
80	L	-	56	0.625	+0.000 -0.0005	1.875	1.69	0.517	0.188	3.50	3.59	1.22	4.49	4.49	3/4”	M25 x 1.5
80	-	LP	143T	0.875		2.250	1.81	0.771	0.188	3.50	5.59	0.91	4.49	4.49	3/4”	M25 x 1.5
90	S/L	SP/LP	145T	0.875	+0.000 -0.0005	2.250	1.81	0.771	0.188	3.50	5.79	1.06	4.49	4.49	3/4”	M25 x 1.5
100	L	LP	182T	1.125	+0.000 -0.0005	2.750	2.25	0.986	0.250	4.50	6.65	1.30	4.49	4.49	1”	M32 x 1.5
100	LA	AP	184T	1.125		2.750	2.25	0.986	0.250	4.50	6.65	1.30	4.49	4.49	1”	M32 x 1.5
112	M	-	184T	1.125	+0.000 -0.0005	2.750	2.25	0.986	0.250	4.50	7.05	1.26	4.49	4.49	1”	M32 x 1.5
112	-	MP	184T	1.125		2.750	2.25	0.986	0.250	4.50	7.05	1.26	4.49	4.49	1”	M32 x 1.5
132	S	-	213T	1.375		3.375	3.06	1.201	0.312	5.25	8.03	1.89	4.80	4.80	1”	M32 x 1.5
132	-	SP	213T	1.375	+0.000 -0.0005	3.375	3.06	1.201	0.312	5.25	8.03	1.89	4.80	4.80	1”	M32 x 1.5
132	M	MP	215T	1.375		3.375	3.06	1.201	0.312	5.25	8.03	1.89	4.80	4.80	1”	M32 x 1.5

Send Quote Requests to info@automatedpt.com
Call +1(800)985-6929 To Order or Order Online At Nordgearmotors.com

NEMA C-Face Motors

Standard Motor

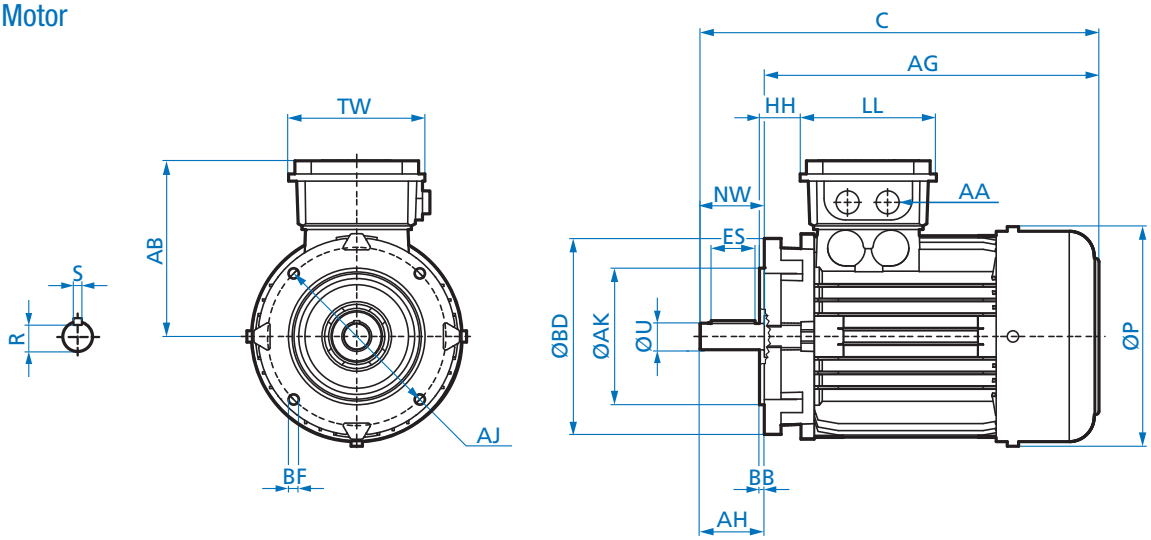

Motor Frame	Efficiency		NEMA Frame	Overall			Flange				
	SE	PE		C	AG	P	AJ	AK		BD	BB	BF
63	S/L	-	56C	9.62	7.56	5.08	5.875	4.500	+0.000 -0.0003	6.50	0.16	3/8-16 x 0.71
71	S/L	-	56C	10.49	8.43	5.75	5.875	4.500	+0.000 -0.0003	6.50	0.16	3/8-16 x 0.71
80	S/L	LP	56C	11.51	9.45	6.46	5.875	4.500	+0.000 -0.0003	6.50	0.16	3/8-16 x 0.87
80	L	-	56C	11.51	9.45	6.46	5.875	4.500		6.50	0.16	3/8-16 x 0.87
80	-	LP	143TC	11.57	9.45	6.46	5.875	4.500		6.50	0.16	3/8-16 x 0.87
90	S/L	SP/LP	145TC	13.15	11.02	7.20	5.875	4.500	+0.000 -0.0003	6.50	0.16	3/8-16 x 0.71

Motor Frame	Efficiency		NEMA Frame	Shaft							Terminal Box					
	SE	PE		U		NW	AH	ES	R	S	AB	HH	LL	TW	AA (NPT)	AA (mm)
63	S/L	-	56C	0.625	+0.000 -0.0005	1.88	2.06	1.69	0.517	0.188	4.53	0.47	3.94	3.94	1/2”	M20 x 1.5
71	S/L	-	56C	0.625	+0.000 -0.0005	1.88	2.06	1.69	0.517	0.188	4.88	0.79	3.94	3.94	1/2”	M20 x 1.5
80	S/L	LP	56C	0.625	+0.000 -0.0005	1.88	2.06	1.69	0.517	0.188	5.59	1.02	4.49	4.49	3/4”	M25 x 1.5
80	L	-	56C	0.625		1.88	2.06	1.69	0.517	0.188	5.59	1.02	4.49	4.49	3/4”	M25 x 1.5
80	-	LP	143TC	0.875		2.25	2.12	1.81	0.771	0.188	5.59	1.02	4.49	4.49	3/4”	M25 x 1.5
90	S/L	SP/LP	145TC	0.875	+0.000 -0.0005	2.25	2.12	1.81	0.771	0.188	5.79	1.18	4.49	4.49	3/4”	M25 x 1.5

Send Quote Requests to info@automatedpt.com
Call +1(800)985-6929 To Order or Order Online At Nordgearmotors.com

Standard Motor

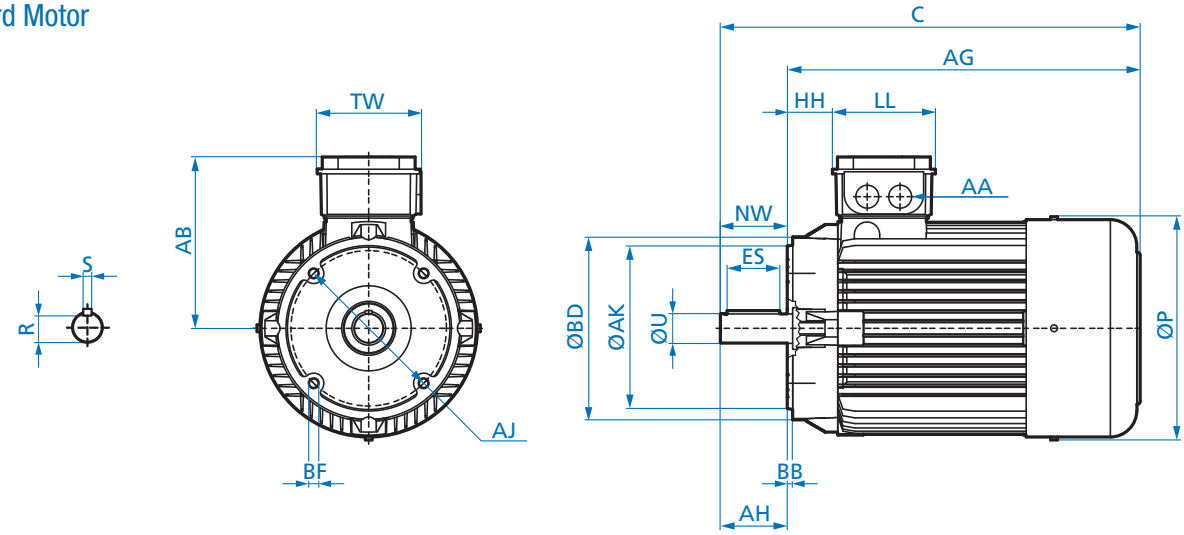

Motor Frame	Efficiency		NEMA Frame	Overall			Flange				
	SE	PE		C	AG	P	AJ	AK		BD	BB	BF
100	L	LP	182TC	14.83	12.20	7.91	7.250	8.500	+0.000 -0.003	9.00	0.25	1/2-13 x 1.10
100	LA	AP	184TC	14.83	12.20	7.91	7.250	8.500		9.00	0.25	1/2-13 x 1.10
112	M	-	184TC	15.46	12.83	8.90	7.250	8.500	+0.000 -0.003	9.00	0.25	1/2-13 x 0.98
112	-	MP	184TC	16.44	13.82	8.90	7.250	8.500		9.00	0.25	1/2-13 x 0.98
132	S	SP	213TC	19.58	16.46	10.47	7.250	8.500	+0.000 -0.003	8.69	0.25	1/2-13 x 1.18
132	M	MP	215TC	19.58	16.46	10.47	7.250	8.500		8.69	0.25	1/2-13 x 1.18
160	M	MP	254TC	23.12	19.37	12.56	7.250	8.500	+0.000 -0.003	10.00	0.25	1/2-13 x 0.87
160	L	-	256TC	23.12	19.37	12.56	7.250	8.500		10.00	0.25	1/2-13 x 0.87
160	-	LP	256TC	24.85	21.10	12.56	7.250	8.500		10.00	0.25	1/2-13 x 0.87
180	MX	-	284TC	23.12	19.37	12.56	9.000	10.500	+0.000 -0.003	11.26	0.25	1/2-13 x 0.87
180	-	MP	284TC	28.79	24.42	14.25	9.000	10.500		11.26	0.25	1/2-13 x 0.87
180	LX	-	286TC	24.85	21.10	12.56	9.000	10.500		11.26	0.25	1/2-13 x 0.87
180	-	LP	286TC	28.79	24.42	14.25	9.000	10.500		11.26	0.25	1/2-13 x 0.87

Motor Frame	Efficiency		NEMA Frame	Shaft							Terminal Box					
	SE	PE		U		NW	AH	ES	R	S	AB	HH	LL	TW	AA (NPT)	AA (mm)
100	L	LP	182TC	1.125	+0.000 -0.0005	2.75	2.62	2.25	0.986	0.250	6.65	1.42	4.49	4.49	1"	M32 x 1.5
100	LA	AP	184TC	1.125		2.75	2.62	2.25	0.986	0.250	6.65	1.42	4.49	4.49	1"	M32 x 1.5
112	M	-	184TC	1.125	+0.000 -0.0005	2.75	2.62	2.25	0.986	0.250	7.05	1.38	4.49	4.49	1"	M32 x 1.5
112	-	MP	184TC	1.125		2.75	2.62	2.25	0.986	0.250	7.05	1.38	4.49	4.49	1"	M32 x 1.5
132	S	SP	213TC	1.375	+0.000 -0.0005	3.38	3.12	3.06	1.201	0.312	8.03	2.13	4.80	4.80	1"	M32 x 1.5
132	M	MP	215TC	1.375		3.38	3.12	3.06	1.201	0.312	8.03	2.13	4.80	4.80	1"	M32 x 1.5
160	M	MP	254TC	1.625	+0.000 -0.001	4.00	3.75	3.13	1.416	0.375	9.53	2.05	7.32	7.32	1"	M40 x 1.5
160	L	-	256TC	1.625		4.00	3.75	3.13	1.416	0.375	9.53	2.05	7.32	7.32	1"	M40 x 1.5
160	-	LP	256TC	1.625		4.00	3.75	3.13	1.416	0.375	9.53	2.05	7.32	7.32	1"	M40 x 1.5
180	MX	-	284TC	1.875	+0.000 -0.001	4.62	4.38	4.00	1.591	0.500	10.20	2.29	7.32	7.32	1"	M40 x 1.5
180	-	MP	284TC	1.875		4.62	4.38	4.00	1.591	0.500	10.20	2.37	7.32	7.32	1"	M40 x 1.5
180	LX	-	286TC	1.875		4.62	4.38	4.00	1.591	0.500	10.20	2.29	7.32	7.32	1"	M40 x 1.5
180	-	LP	286TC	1.875		4.62	4.38	4.00	1.591	0.500	10.20	2.37	7.32	7.32	1"	M40 x 1.5

Send Quote Requests to info@automatedpt.com
Call +1(800)985-6929 To Order or Order Online At Nordgearmotors.com

NEMA C-Face Motor Options

Option WE - 2nd Shaft Extension

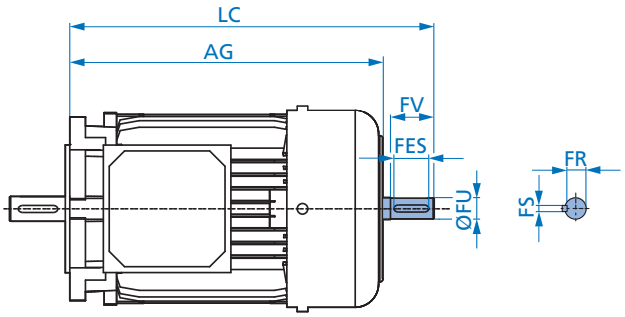

Option RD - Canopy Drip Cover

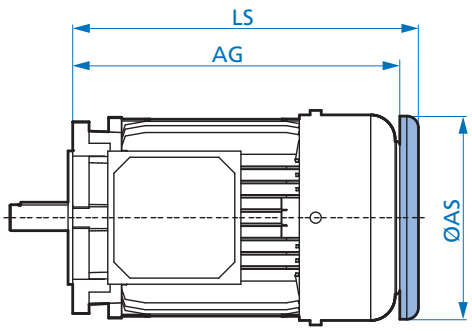

Option RDD - Double Fan Cover

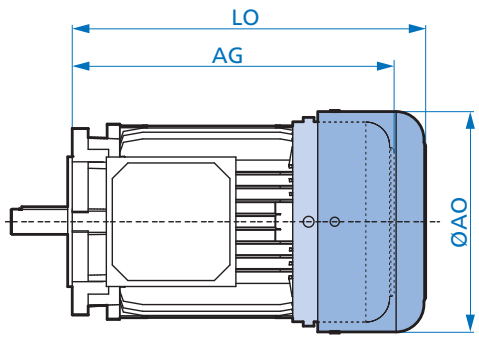

Motor Frame	Efficiency		NEMA Frame		WE							RD		RDD	
	SE	PE		AG	LC	FU		FS	FR	FV	FES	LS	øAS	LO	øAO
63	S/L	-	56C	7.56	9.06	0.500	+0.000 -0.0005	flat	0.453	1.500	-	7.99	4.84	8.58	5.43
71	S/L	-	56C	8.43	9.96	0.500	+0.000 -0.0005	flat	0.453	1.500	-	8.86	5.43	9.37	6.14
80	S	SP	56C	9.45	11.44	0.625	+0.000 -0.0005	0.188	0.517	1.875	1.50	10.04	6.14	10.47	6.93
80	L	LP	56C	9.45	11.44	0.625		0.188	0.517	1.875	1.50	10.04	6.14	10.47	6.93
80	-	LP	143TC	9.45	11.44	0.625		0.188	0.517	1.875	1.50	10.04	6.14	10.47	6.93
90	S/L	SP/LP	145TC	11.02	13.17	0.625	+0.000 -0.0005	0.188	0.517	1.875	1.50	11.61	6.93	12.24	7.64
100	L	LP	182TC	12.20	14.69	0.875	+0.000 -0.0005	0.188	0.771	2.250	1.63	12.80	7.64	13.31	8.58
100	LA	AP	184TC	12.20	14.69	0.875		0.188	0.771	2.250	1.63	12.80	7.64	13.31	8.58
112	M	-	184TC	12.83	15.24	0.875	+0.000 -0.0005	0.188	0.771	2.250	1.63	13.43	8.58	14.33	10.16
112	-	MP	184TC	13.82	16.23	0.875		0.188	0.771	2.250	1.63	14.41	8.58	15.31	10.16
132	S	SP	213TC	16.46	19.92	1.125	+0.000 -0.0005	0.250	0.986	2.750	2.00	17.13	10.12	18.07	12.20
132	M	MP	215TC	16.46	19.92	1.125		0.250	0.986	2.750	2.00	17.13	10.12	18.07	12.20
160	M	MP	254TC	19.37	23.10	1.375	+0.000 -0.0005	0.313	1.201	3.380	2.75	20.04	12.20	21.14	14.45
160	L	-	256TC	19.37	23.10	1.375		0.313	1.201	3.380	2.75	20.04	12.20	21.14	14.45
160	-	LP	256TC	21.10	24.84	1.375		0.313	1.201	3.380	2.75	21.77	12.20	22.87	14.45
180	MX	-	284TC	19.37	23.72	1.625	+0.000 -0.0001	0.375	1.416	4.000	3.25	20.04	12.20	21.14	14.45
180	-	MP	284TC	24.42	28.77	1.625		0.375	1.416	4.000	3.25	25.09	13.70	27.17	15.87
180	LX	-	286TC	21.10	25.46	1.625		0.375	1.416	4.000	3.25	21.77	12.20	22.87	14.45
180	-	LP	286TC	24.42	28.77	1.625		0.375	1.416	4.000	3.25	25.09	13.70	27.17	15.87

Send Quote Requests to info@automatedpt.com
Call +1(800)985-6929 To Order or Order Online At Nordgearmotors.com

Option IG - Incremental Encoder

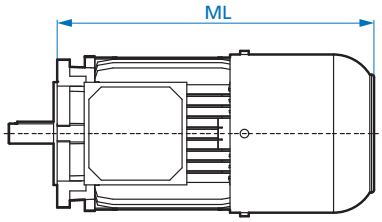

Option MG - Magnetic Encoder

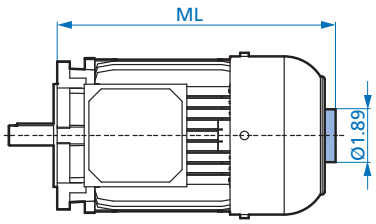

MG + RD

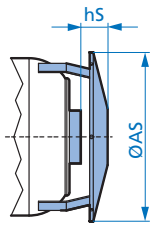

Option F - Forced Cooling Fan

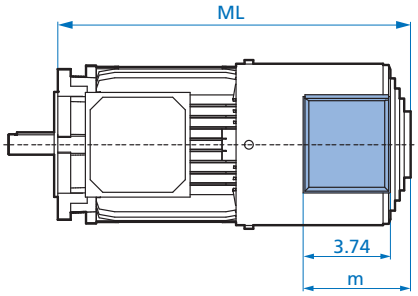

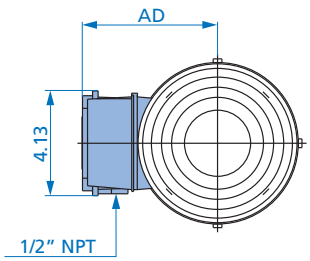

F + RD

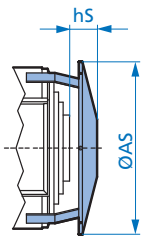

Option IG-F - Incremental Encoder & Forced Cooling Fan

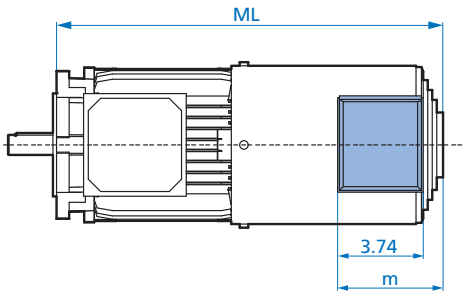

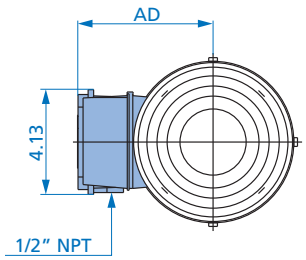

IG-F + RD

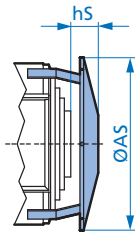

Motor Frame	Efficiency		NEMA Frame	IG	MG	MG & RD		F			F & RD		IG-F			IG-F & RD	
	SE	PE		ML	ML	hs	øAS	ML	m	AD	hs	øAS	ML	m	AD	hs	øAS
63	S/L	-	56C	9.72	7.97	0.43	4.84	11.02	4.21	4.84	1.46	5.91	13.78	4.21	4.84	1.46	5.91
71	S/L	-	56C	10.63	8.88	0.43	5.43	11.93	4.21	4.84	1.46	5.91	14.09	4.21	4.84	1.46	5.91
80	S/L	SP	56C	11.85	9.84	0.35	6.14	12.99	4.21	5.20	1.57	6.69	14.96	4.21	5.20	1.57	6.69
80	-	LP	143TC	11.85	9.84	0.35	6.14	12.99	4.21	5.20	1.57	6.69	14.96	4.21	5.20	1.57	6.69
90	S/L	SP/LP	145TC	13.86	11.57	0.35	6.93	15.12	4.61	5.59	1.18	7.40	16.89	4.61	5.59	1.18	7.40
100	L	LP	182TC	14.92	12.70	0.33	7.64	15.94	4.61	5.94	1.10	8.27	18.31	4.61	5.94	1.10	8.27
100	LA	AP	184TC	14.92	12.70	0.33	7.64	15.94	4.61	5.94	1.10	8.27	18.31	4.61	5.94	1.10	8.27
112	M	-	184TC	15.51	13.33	0.33	8.58	16.73	4.61	6.42	1.30	9.80	18.70	4.61	6.42	1.30	9.80
112	-	MP	184TC	16.50	14.29	0.33	8.58	17.72	4.61	6.42	1.30	9.80	19.69	4.61	6.42	1.30	9.80
132	S	SP	213TC	18.94	16.85	0.43	10.12	20.98	5.00	7.20	0.98	11.81	22.56	5.00	7.20	0.98	11.81
132	M	MP	215TC	18.94	16.85	0.43	10.12	20.98	5.00	7.20	0.98	11.81	22.56	5.00	7.20	0.98	11.81
160	M	MP	254TC	22.13	20.00	0.41	12.20	25.28	5.00	8.25	1.26	13.31	28.62	5.00	8.25	1.26	13.31
160	L	-	256TC	22.13	20.00	0.41	12.20	25.28	5.00	8.25	1.26	13.31	28.62	5.00	8.25	1.26	13.31
160	-	LP	256TC	23.86	21.73	0.41	12.20	26.81	5.00	8.25	1.26	13.31	30.35	5.00	8.25	1.26	13.31
180	MX	-	284TC	22.13	20.00	0.41	12.20	25.28	5.00	8.25	1.26	13.31	28.62	5.00	8.25	1.26	13.31
180	-	MP	284TC	27.17	24.93	0.41	13.70	30.32	5.00	8.25	1.26	13.31	33.67	5.00	8.25	1.26	13.31
180	LX	-	286TC	23.86	21.73	0.41	12.20	26.81	5.00	8.25	1.26	13.31	30.35	5.00	8.25	1.26	13.31
180	-	LP	286TC	27.17	24.93	0.41	13.70	30.44	5.00	8.25	1.26	13.31	33.59	5.00	8.25	1.26	13.31

Send Quote Requests to info@automatedpt.com
Call +1(800)985-6929 To Order or Order Online At Nordgearmotors.com

NEMA C-Face Motor Options

Option OL - Without Fan

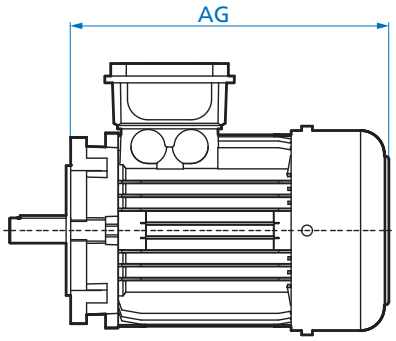

Option OL/H - Without Fan Cover

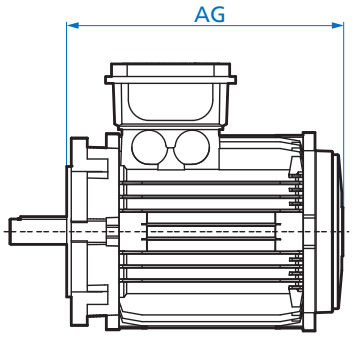

Option EKK - One Piece Terminal Box

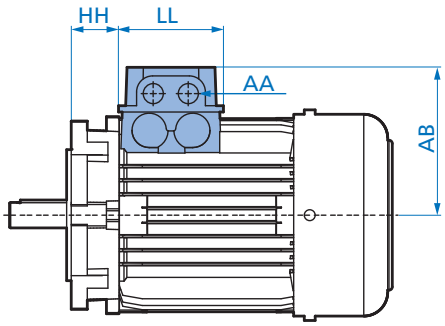

Option MS - Quick Power Plug Connector

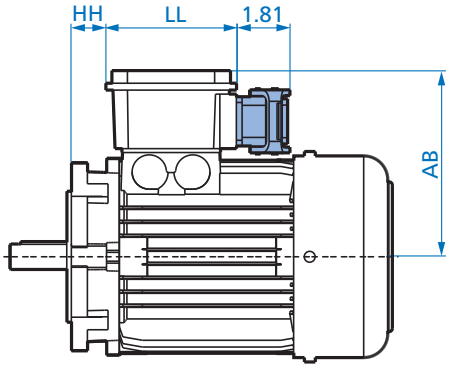

Motor Frame	Efficiency		NEMA Frame	OL	OL/H	EKK					MS		
	SE	PE		AG	AG	HH	LL	AB	AA (NPT)	AA (mm)	HH	LL	AB
63	S/L	-	56C	7.56	6.65	0.98	2.95	4.29	1/2"	M16 x 1.5	0.20	4.49	5.87
71	S/L	-	56C	8.43	7.24	1.30	2.95	4.29	1/2"	M16 x 1.5	0.51	4.49	5.87
80	S	SP	56C	9.45	7.87	1.46	2.95	4.88	1/2"	M20 x 1.5	1.02	4.49	6.22
80	L	-	56C	9.45	7.87	1.46	3.62	4.88	1/2"	M20 x 1.5	1.02	4.49	6.22
80	-	LP	143TC	9.45	7.87	1.46	3.62	5.08	1/2"	M20 x 1.5	1.02	4.49	6.22
90	S/L	SP/LP	145TC	11.02	9.06	1.61	3.62	5.08	1/2"	M20 x 1.5	1.18	4.49	6.42
100	L	LP	182TC	12.20	9.84	1.85	3.62	5.51	1/2"	M20 x 1.5	1.42	4.49	6.85
100	LA	AP	184TC	12.20	9.84	1.85	3.62	5.51	1/2"	M20 x 1.5	1.42	4.49	6.85
112	M	-	184TC	12.83	10.47	2.20	3.62	5.91	1/2"	M20 x 1.5	1.77	4.49	7.24
112	-	MP	184TC	13.82	11.46	2.20	3.62	5.91	1/2"	M20 x 1.5	1.77	4.49	7.24
132	S	SP	213TC	16.46	13.31	2.48	4.09	6.85	3/4"	M25 x 1.5	2.13	4.80	8.03
132	M	MP	215TC	16.46	13.31	2.48	4.09	6.85	3/4"	M25 x 1.5	2.13	4.80	8.03
160	M	MP	254TC	19.37	15.04								
160	L	-	256TC	19.37	15.04								
160	-	LP	256TC	21.10	16.77								
180	MX	-	284TC	19.37	15.04								
180	-	MP	284TC	24.42	20.09								
180	LX	-	286TC	21.10	16.77								
180	-	LP	286TC	24.42	20.09								

Send Quote Requests to info@automatedpt.com
Call +1(800)985-6929 To Order or Order Online At Nordgearmotors.com

ECR - Single Phase Motor with Start-up and Run Capacitor

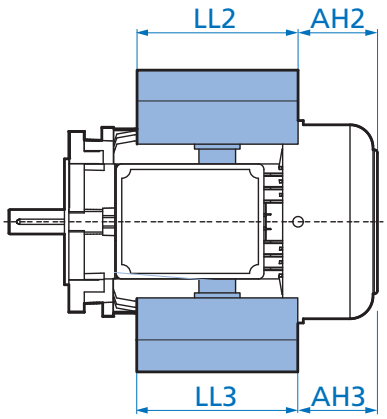

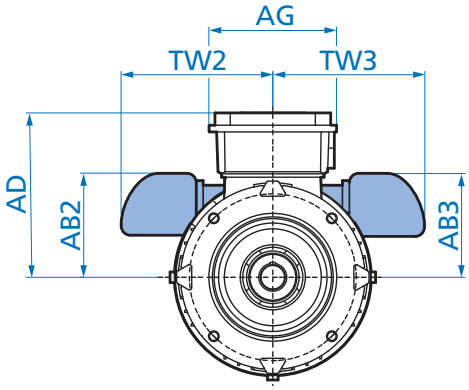

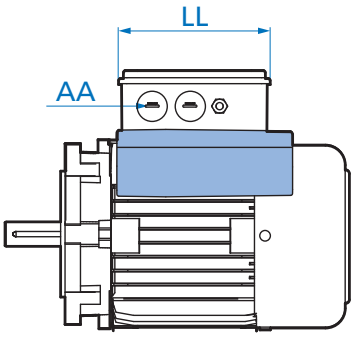

Motor Type	ECR												
	AD	AG	AB2	AB3	AH2	AH3	LL2	LL3	TW2	TW3	LL	AA (NPT)	AA (mm)
63 LA	4.84	3.50	3.52	3.52	1.23	1.23	4.96	4.96	4.37	4.38	5.28	3/4"	M25 x 1.5
71 L/LA	5.20	3.50	4.15	3.82	1.13	1.73	5.75	4.96	4.81	4.38	5.28	3/4"	M25 x 1.5
80 L/LA	5.59	4.25	4.45	4.27	1.57	2.36	5.75	4.96	5.03	4.83	6.02	3/4"	M25 x 1.5
90 L	5.79	4.25	4.65	4.47	2.99	3.78	5.75	4.96	5.03	4.83	6.02	3/4"	M25 x 1.5
90 LB/LX	5.79	4.25	4.65	4.65	2.99	2.99	5.75	5.75	5.03	4.83	6.02	3/4"	M25 x 1.5

Send Quote Requests to info@automatedpt.com
Call +1(800)985-6929 To Order or Order Online At Nordgearmotors.com

NEMA C-Face Brakemotors

Standard Brakemotor

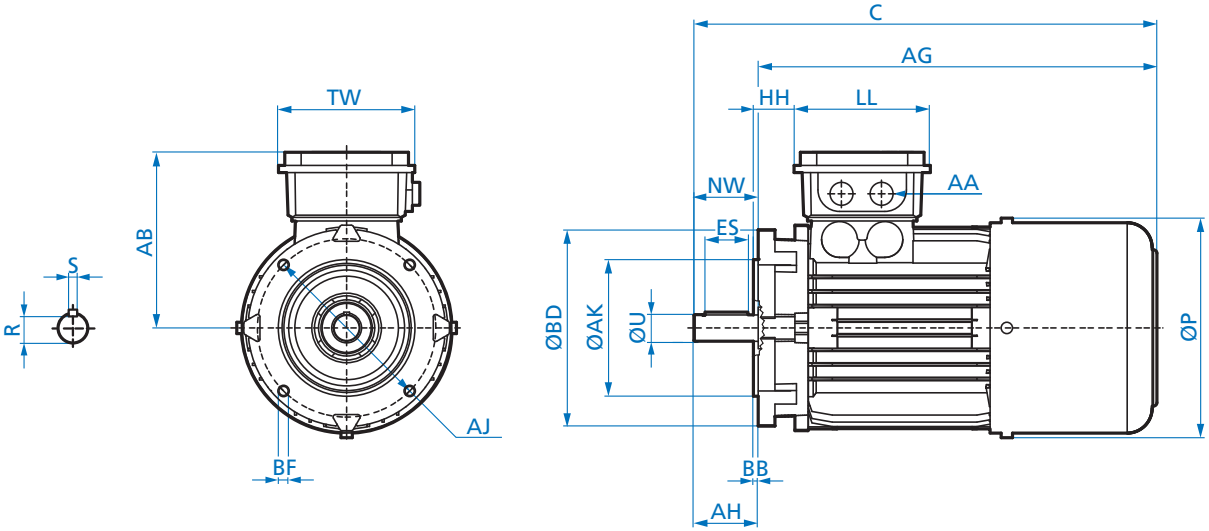

Motor Frame	Efficiency		NEMA Frame		Overall			Flange					
	SE	PE		BRE	C	AG	P	AJ	AK		BD	BB	BF
63	S/L	-	56C	5	11.83	9.76	5.08	5.875	4.500		6.50	0.16	3/8-16 x 0.71
71	S/L	-	56C	5	12.77	10.71	5.75	5.875	4.500		6.50	0.16	3/8-16 x 0.71
80	S/L	LP	56C	5	14.03	11.97	6.46	5.875	4.500	+0.000 -0.003	6.50	0.16	3/8-16 x 0.87
80	L	-	56C	10	14.03	11.97	6.46	5.875	4.500		6.50	0.16	3/8-16 x 0.87
80	-	LP	143TC	10	14.53	12.40	6.46	5.875	4.500		6.50	0.16	3/8-16 x 0.87
90	S/L	SP/LP	145TC	20	16.73	14.61	7.20	5.875	4.500		6.50	0.16	3/8-16 x 0.71

Motor Frame	Efficiency		NEMA Frame		Shaft						Terminal Box					
	SE	PE		BRE	U		NW	AH	ES	R	S	AB	HH	LL	TW	AA (NPT)	AA (mm)
63	S/L	-	56C	5	0.625		1.88	2.06	1.69	0.517	0.188	4.84	0.75	5.28	3.50	1/2"	M20 x 1.5
71	S/L	-	56C	5	0.625		1.88	2.06	1.69	0.517	0.188	5.20	1.06	5.28	3.50	1/2"	M20 x 1.5
80	S/L	LP	56C	5	0.625	+0.000 -0.0005	1.88	2.06	1.69	0.517	0.188	5.59	1.18	6.02	4.25	3/4"	M25 x 1.5
80	L	-	56C	10	0.625		1.88	2.06	1.69	0.517	0.188	5.59	1.18	6.02	4.25	3/4"	M25 x 1.5
80	-	LP	143TC	10	0.875		2.25	2.12	1.81	0.771	0.188	5.59	1.18	6.02	4.25	3/4"	M25 x 1.5
90	S/L	SP/LP	145TC	20	0.875		2.25	2.12	1.81	0.771	0.188	5.79	1.34	6.02	4.25	3/4"	M25 x 1.5

Send Quote Requests to info@automatedpt.com
Call +1(800)985-6929 To Order or Order Online At Nordgearmotors.com

NORD DRIVESYSTEMS

Standard Brakemotor

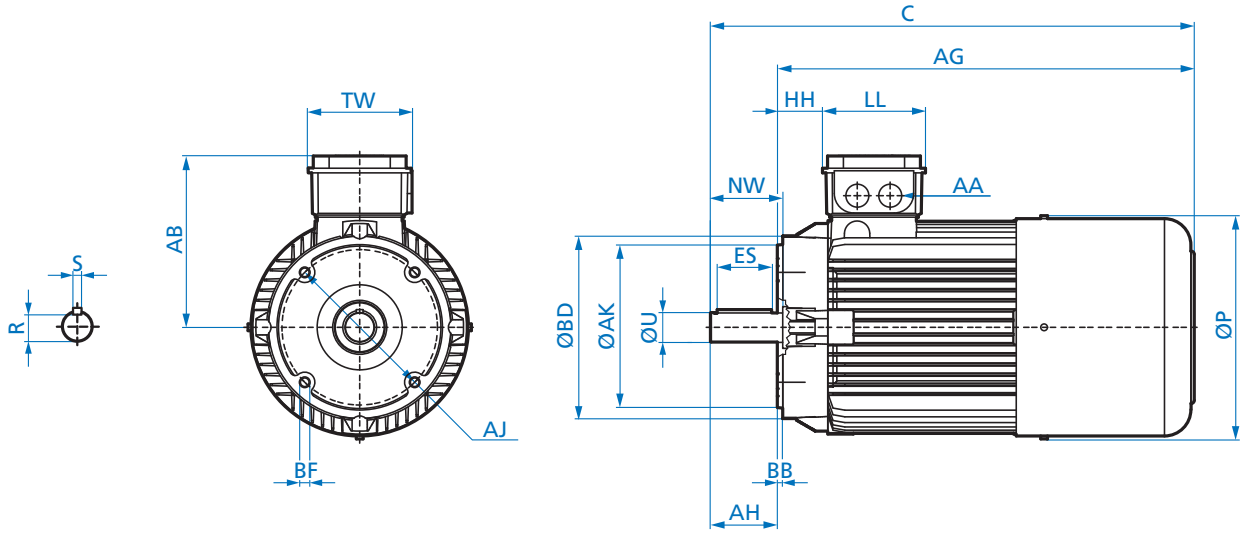

Motor Frame	Efficiency		NEMA Frame		Overall			Flange					
	SE	PE		BRE	C	AG	P	AJ	AK		BD	BB	BF
100	L	LP	182TC	20	18.41	15.79	7.91	7.250	8.500	+0.000 -0.003	9.00	0.25	1/2-13 x 1.10
100	LA	AP	184TC	40	18.53	15.91	7.91	7.250	8.500		9.00	0.25	1/2-13 x 1.10
112	M	-	184TC	60	19.16	16.54	8.90	7.250	8.500	+0.000 -0.003	9.00	0.25	1/2-13 x 0.98
112	-	MP	184TC	60	20.66	18.03	8.90	7.250	8.500		9.00	0.25	1/2-13 x 0.98
132	S	SP	213TC	60	23.79	20.67	10.47	7.250	8.500	+0.000 -0.003	8.69	0.25	1/2-13 x 1.18
132	M	MP	215TC	100	23.79	20.67	10.47	7.250	8.500		8.69	0.25	1/2-13 x 1.18
160	M	MP	254TC	150	28.44	24.69	12.56	7.250	8.500	+0.000 -0.003	10.00	0.25	1/2-13 x 0.87
160	L	-	256TC	250	28.44	24.69	12.56	7.250	8.500		10.00	0.25	1/2-13 x 0.87
160	-	LP	256TC	250	30.17	26.42	12.56	7.250	8.500		10.00	0.25	1/2-13 x 0.87
180	MX	-	284TC	250	28.44	24.69	12.56	9.000	10.500	+0.000 -0.003	11.26	0.25	1/2-13 x 0.87
180	-	MP	284TC	250	34.11	29.73	14.25	9.000	10.500		11.26	0.25	1/2-13 x 0.87
180	LX	-	286TC	250	29.85	26.10	12.56	9.000	10.500		11.26	0.25	1/2-13 x 0.87
180	-	LP	286TC	250	33.79	29.42	14.25	9.000	10.500		11.26	0.25	1/2-13 x 0.87

Motor Frame	Efficiency		NEMA Frame		Shaft							Terminal Box					
	SE	PE		BRE	U		NW	AH	ES	R	S	AB	HH	LL	TW	AA (NPT)	AA (mm)
100	L	LP	182TC	20	1.125	+0.000 -0.0005	2.75	2.62	2.25	0.986	0.250	6.77	1.57	6.02	4.25	1"	M32 x 1.5
100	LA	AP	184TC	40	1.125		2.75	2.62	2.25	0.986	0.250	6.77	1.57	6.02	4.25	1"	M32 x 1.5
112	M	-	184TC	60	1.125	+0.000 -0.0005	2.75	2.62	2.25	0.986	0.250	7.17	1.54	6.02	4.25	1"	M32 x 1.5
112	-	MP	184TC	60	1.125		2.75	2.62	2.25	0.986	0.250	7.17	1.54	6.02	4.25	1"	M32 x 1.5
132	S	SP	213TC	60	1.375	+0.000 -0.0005	3.38	3.12	3.06	1.201	0.312	7.91	1.85	7.28	5.47	1"	M32 x 1.5
132	M	MP	215TC	100	1.375		3.38	3.12	3.06	1.201	0.312	7.91	1.85	7.28	5.47	1"	M32 x 1.5
160	M	MP	254TC	150	1.625	+0.000 -0.001	4.00	3.75	3.13	1.416	0.375	9.53	2.05	7.32	7.32	1"	M40 x 1.5
160	L	-	256TC	250	1.625		4.00	3.75	3.13	1.416	0.375	9.53	2.05	7.32	7.32	1"	M40 x 1.5
160	-	LP	256TC	250	1.625		4.00	3.75	3.13	1.416	0.375	9.53	2.05	7.32	7.32	1"	M40 x 1.5
180	MX	-	284TC	250	1.875	+0.000 -0.001	4.62	4.38	4.00	1.591	0.500	9.53	2.29	7.32	7.32	1"	M40 x 1.5
180	-	MP	284TC	250	1.875		4.62	4.38	4.00	1.591	0.500	9.53	2.37	7.32	7.32	1"	M40 x 1.5
180	LX	-	286TC	250	1.875		4.62	4.38	4.00	1.591	0.500	9.53	2.29	7.32	7.32	1"	M40 x 1.5
180	-	LP	286TC	250	1.875		4.62	4.38	4.00	1.591	0.500	10.20	2.37	7.32	7.32	1"	M40 x 1.5

Send Quote Requests to info@automatedpt.com
Call +1(800)985-6929 To Order or Order Online At Nordgearmotors.com

NEMA C-Face Brakemotor Options

Option WE - 2nd Shaft Extension

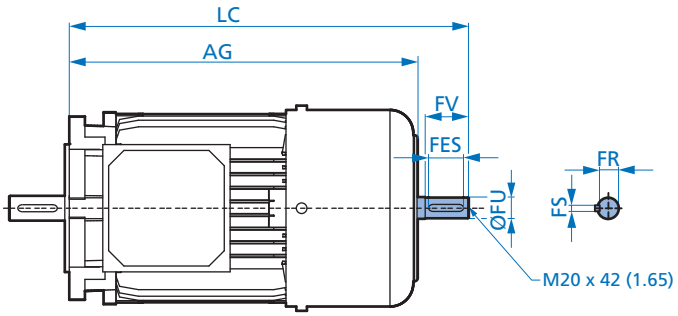

Option RD - Canopy Drip Cover

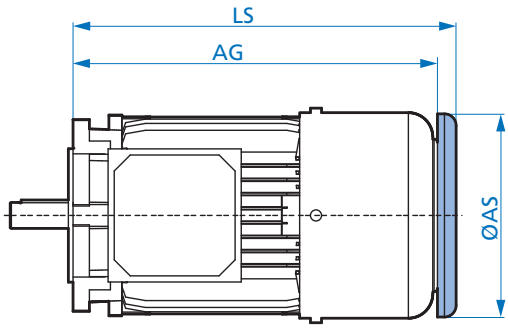

Option RDD - Double Fan Cover

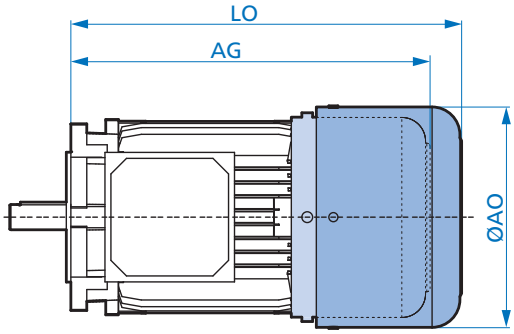

Motor Frame	Efficiency		NEMA Frame			WE						RD		RDD	
	SE	PE		BRE	AG	LC	FU		FS	FR	FV	FES	LS	øAS	LO	øAO
63	S/L	-	56C	5	9.76	11.42	0.500	+0.000 -0.0005	flat	0.453	1.500	-	10.20	4.84	10.79	5.43
71	S/L	-	56C	5	10.71	12.37	0.500	+0.000 -0.0005	0.188	0.453	1.500	-	11.14	5.43	11.65	6.14
80	S	SP	56C	5	11.97	13.63	0.500		0.188	0.517	1.875	1.25	12.56	6.14	12.99	6.93
80	L	-	56C	10	11.97	14.00	0.625	+0.000 -0.0005	0.188	0.517	1.875	1.50	12.56	6.14	12.99	6.93
80	-	LP	143TC	10	12.40	14.59	0.625		0.188	0.517	1.875	1.50	12.99	6.14	13.43	6.93
90	S/L	SP/LP	145TC	20	14.61	16.88	0.625	+0.000 -0.0005	0.188	0.517	1.875	1.50	15.20	6.93	15.83	7.64
100	L	LP	182TC	20	15.79	18.43	0.875	+0.000 -0.0005	0.188	0.771	2.250	1.63	16.38	7.64	16.89	8.58
100	LA	AP	184TC	40	15.91	18.43	0.875		0.188	0.771	2.250	1.63	16.50	7.64	17.01	8.58
112	M	-	184TC	60	16.54	19.06	0.875	+0.000 -0.0005	0.188	0.771	2.250	1.63	17.13	8.58	18.03	10.16
112	-	MP	184TC	60	18.03	20.68	0.875		0.188	0.771	2.250	1.63	18.62	8.58	19.53	10.16
132	S	SP	213TC	60	20.67	23.81	1.125	+0.000 -0.0005	0.250	0.986	2.750	2.00	21.34	10.12	22.28	12.20
132	M	MP	215TC	100	20.67	23.81	1.125		0.250	0.986	2.750	2.00	21.34	10.12	22.28	12.20
160	M	MP	254TC	150	24.69	28.41	1.375		0.313	1.201	3.380	2.75	25.35	12.20	26.46	14.45
160	L	-	256TC	250	24.69	28.41	1.375	+0.000 -0.0005	0.313	1.201	3.380	2.75	25.35	12.20	26.46	14.45
160	-	LP	256TC	250	26.42	30.15	1.375		0.313	1.201	3.380	2.75	27.09	12.20	28.19	14.45
180	MX	-	284TC	250	24.69	29.04	1.625		0.375	1.416	4.000	3.25	25.35	12.20	26.46	14.45
180	-	MP	284TC	250	29.73	34.09	1.625	+0.000 -0.0001	0.375	1.416	4.000	3.25	30.40	13.70	32.49	15.87
180	LX	-	286TC	250	26.10	30.46	1.625		0.375	1.416	4.000	3.25	26.77	12.20	27.87	14.45
180	-	LP	286TC	250	29.42	33.77	1.625		0.375	1.416	4.000	3.25	30.09	13.70	32.17	15.87

Send Quote Requests to info@automatedpt.com
Call +1(800)985-6929 To Order or Order Online At Nordgearmotors.com

Option IG - Incremental Encoder

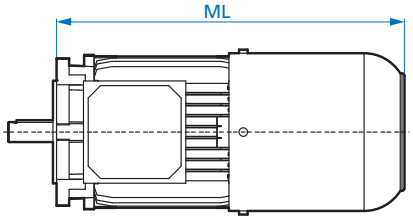

Option MG - Magnetic Encoder

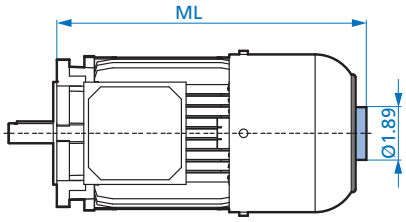

MG + RD

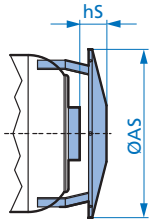

Option F - Forced Cooling Fan

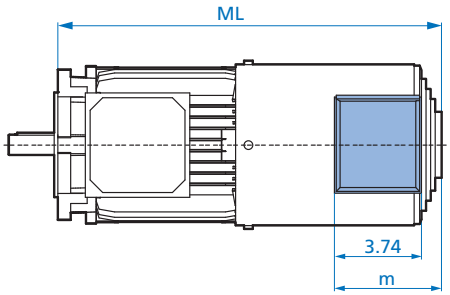

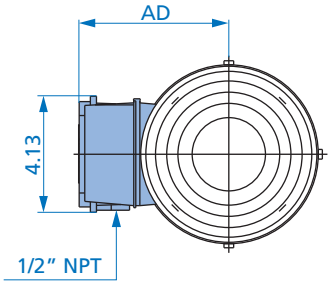

F + RD

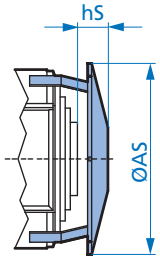

Option IG-F - Incremental Encoder & Forced Cooling Fan

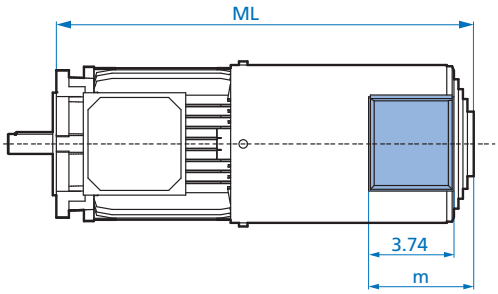

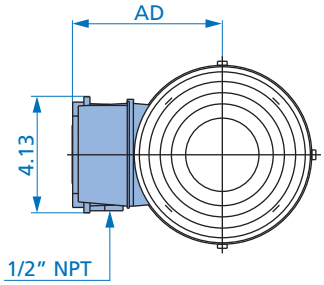

IG-F + RD

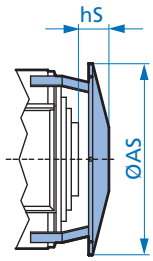

Motor Frame	Efficiency		NEMA Frame		IG	MG	MG & RD		F			F & RD		IG-F			IG-F & RD	
	SE	PE		BRE	ML	ML	hs	øAS	ML	m	AD	hs	øAS	ML	m	AD	hs	øAS
63	S/L	-	56C	5	12.20	10.33	0.43	4.84	13.31	4.21	4.84	1.46	5.91	14.69	4.21	4.84	1.46	5.91
71	S/L	-	56C	5	13.62	11.38	0.43	5.43	14.41	4.21	4.84	1.46	5.91	16.18	4.21	4.84	1.46	5.91
80	S/L	SP	56C	10	14.21	12.44	0.33	6.14	15.51	4.21	5.20	1.57	6.69	17.48	4.21	5.20	1.57	6.69
80	-	LP	143TC	10	15.16	12.87	0.33	6.14	16.34	4.21	5.20	1.57	6.69	18.11	4.21	5.20	1.57	6.69
90	S/L	SP/LP	145TC	20	17.36	15.12	0.35	6.93	18.74	4.61	5.59	1.18	7.40	20.12	4.61	5.59	1.18	7.40
100	L	LP	182TC	20	18.54	16.30	0.33	7.64	19.92	4.61	5.94	1.10	8.27	21.30	4.61	5.94	1.10	8.27
100	LA	AP	184TC	40	18.43	16.42	0.33	7.64	20.04	4.61	5.94	1.10	8.27	21.42	4.61	5.94	1.10	8.27
112	M	-	184TC	60	19.06	17.03	0.35	8.58	20.67	4.61	6.42	1.30	9.80	22.05	4.61	6.42	1.30	9.80
112	-	MP	184TC	60	20.59	18.52	0.33	8.58	22.95	4.61	6.42	1.30	9.80	24.13	4.61	6.42	1.30	9.80
132	S	SP	213TC	60	23.23	21.00	0.45	10.12	25.59	5.00	7.20	0.98	11.81	26.77	5.00	7.20	0.98	11.81
132	M	MP	215TC	100	23.23	21.00	0.45	10.12	25.59	5.00	7.20	0.98	11.81	26.77	5.00	7.20	0.98	11.81
160	M	MP	254TC	150	27.44	25.35	0.41	12.20	30.39	5.00	8.25	1.26	13.31	33.94	5.00	8.25	1.26	13.31
160	L	-	256TC	250	27.44	25.35	0.41	12.20	30.39	5.00	8.25	1.26	13.31	33.94	5.00	8.25	1.26	13.31
160	-	LP	256TC	250	29.17	27.09	0.41	12.20	32.13	5.00	8.25	1.26	13.31	35.67	5.00	8.25	1.26	13.31
180	MX	-	284TC	250	27.44	25.35	0.41	12.20	30.39	5.00	8.25	1.26	13.31	33.94	5.00	8.25	1.26	13.31
180	-	MP	284TC	250	32.49	30.44	0.41	13.70	35.44	5.00	8.25	1.26	13.31	38.98	5.00	8.25	1.26	13.31
180	LX	-	286TC	250	28.86	26.77	0.41	12.20	31.85	5.00	8.25	1.26	13.31	35.98	5.00	8.25	1.26	13.31
180	-	LP	286TC	250	32.17	30.13	0.41	13.70	35.17	5.00	8.25	1.26	13.31	39.30	5.00	8.25	1.26	13.31

Send Quote Requests to info@automatedpt.com
Call +1(800)985-6929 To Order or Order Online At Nordgearmotors.com

NEMA C-Face Brakemotor Options

Option OL - Without Fan

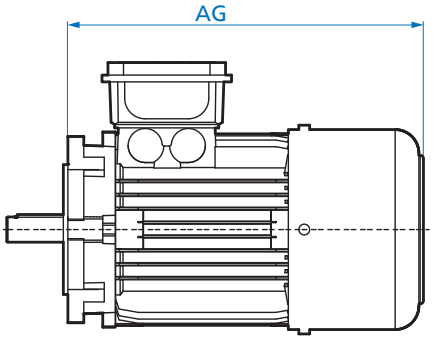

Option EKK - One Piece Terminal Box

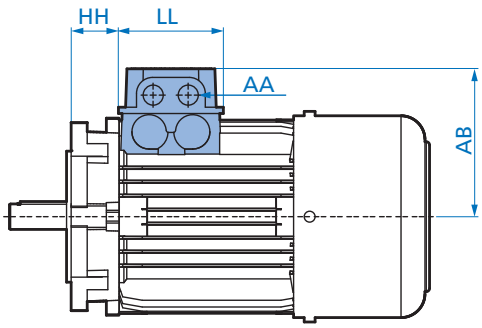

Option MS - Quick Power Plug Connector

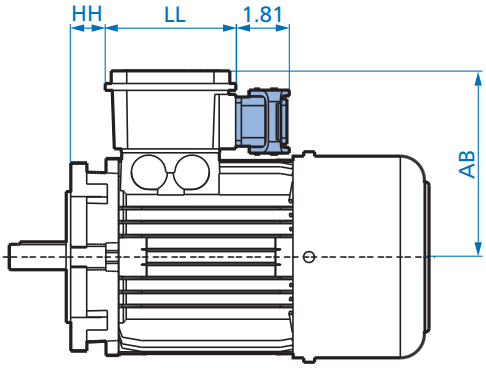

Motor Frame	Efficiency		NEMA Frame		OL	EKK					MS		
	SE	PE		BRE	AG	HH	LL	AB	AA (NPT)	AA (mm)	HH	LL	AB
63	S/L	-	56C	5	9.76	0.98	2.95	4.29	1/2"	M16 x 1.5	0.20	4.49	5.87
71	S/L	-	56C	5	10.71	1.30	2.95	4.29	1/2"	M16 x 1.5	0.51	4.49	5.87
80	S	SP	56C	5	11.97	1.46	2.95	4.88	1/2"	M20 x 1.5	1.02	4.49	6.22
80	L	-	56C	10	11.97	1.46	3.62	4.88	1/2"	M20 x 1.5	1.02	4.49	6.22
80	-	LP	143TC	10	12.40	1.46	3.62	5.08	1/2"	M20 x 1.5	1.02	4.49	6.22
90	S/L	SP/LP	145TC	20	14.61	1.61	3.62	5.08	1/2"	M20 x 1.5	1.18	4.49	6.42
100	L	LP	182TC	20	15.79	1.85	3.62	5.51	1/2"	M20 x 1.5	1.42	4.49	6.85
100	LA	AP	184TC	40	15.91	1.85	3.62	5.51	1/2"	M20 x 1.5	1.42	4.49	6.85
112	M	-	184TC	60	16.54	2.20	3.62	5.91	1/2"	M20 x 1.5	1.77	4.49	7.24
112	-	MP	184TC	60	18.03	2.20	3.62	5.91	1/2"	M20 x 1.5	1.77	4.49	7.24
132	S	SP	213TC	60	20.67	2.48	4.09	6.85	3/4"	M25 x 1.5	2.13	4.80	8.03
132	M	MP	215TC	100	20.67	2.48	4.09	6.85	3/4"	M25 x 1.5	2.13	4.80	8.03
160	M	MP	254TC	150	24.69								
160	L	-	256TC	250	24.69								
160	-	LP	256TC	250	26.42								
180	MX	-	284TC	250	24.69								
180	-	MP	284TC	250	29.73								
180	LX	-	286TC	250	26.10								
180	-	LP	286TC	250	29.42								

Send Quote Requests to info@automatedpt.com
Call +1(800)985-6929 To Order or Order Online At Nordgearmotors.com

ECR - Single Phase Motor with Start-up & Run Capacitor

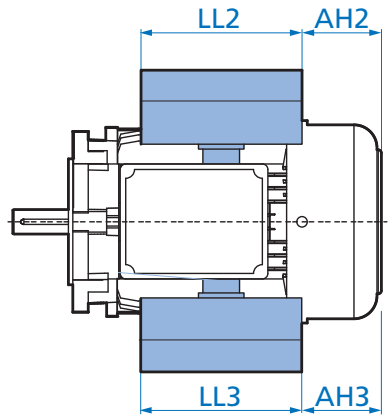

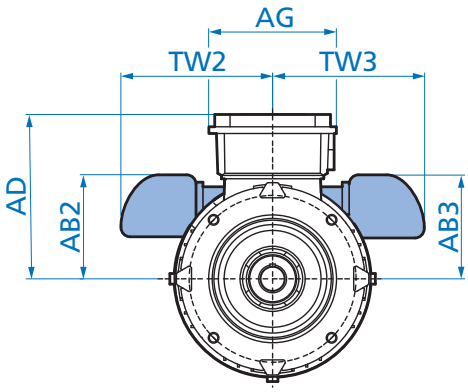

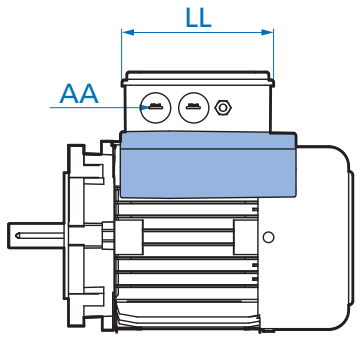

Motor Type	ECR												
	AD	AG	AB2	AB3	AH2	AH3	LL2	LL3	TW2	TW3	LL	AA (NPT)	AA (mm)
63 LA	5.51	4.25	3.52	3.52	3.43	3.43	4.96	4.96	4.37	4.38	6.02	3/4"	M25 x 1.5
71 L/LA	5.87	4.25	4.15	3.82	3.41	4.02	5.75	4.96	4.81	4.38	6.02	3/4"	M25 x 1.5
80 L/LA	5.59	4.25	4.45	4.27	4.09	4.88	5.75	4.96	5.03	4.83	6.02	3/4"	M25 x 1.5
90 L	5.79	4.25	4.65	4.47	5.95	6.73	5.75	4.96	5.03	4.83	6.02	3/4"	M25 x 1.5
90 LB/LX	5.79	4.25	4.65	4.65	5.95	5.95	5.75	5.75	5.03	4.83	6.02	3/4"	M25 x 1.5

Send Quote Requests to info@automatedpt.com
Call +1(800)985-6929 To Order or Order Online At Nordgearmotors.com

IEC B3 Footed Motors

Standard Motor

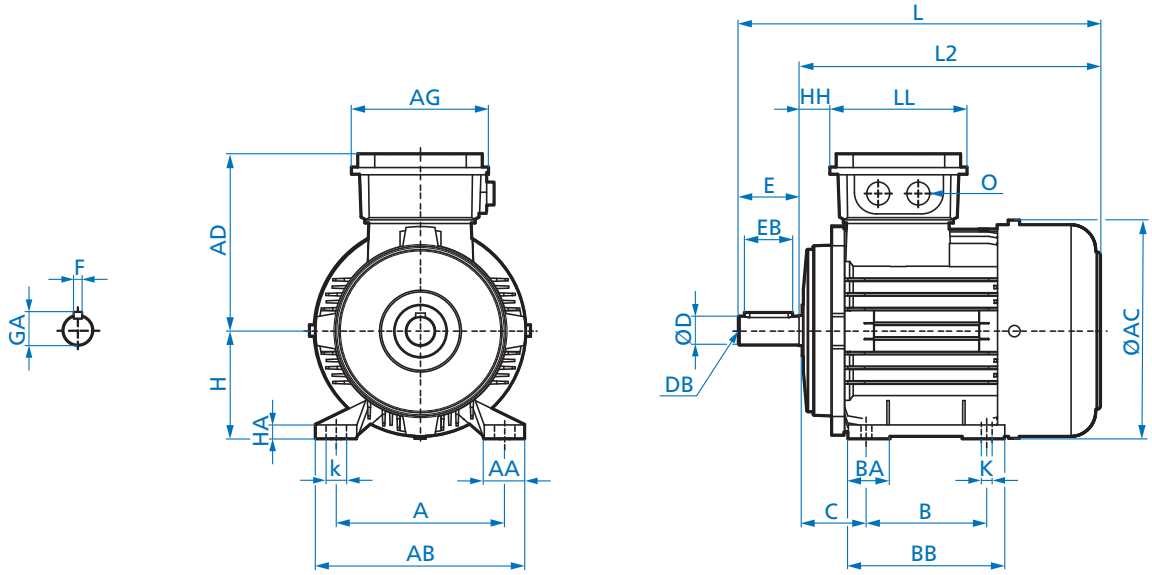

Motor Frame	Efficiency		Overall			Feet									
	IE1	IE3	L	L2	ØAC	A	B	C	AA	BA	AB	BB	k	K	HA
63	S/L	-	215	192	129	100	80	40	21	27	120	105	12	7	9
71	S/L	-	244	214	146	112	90	45	24	24	136	108	12	7	10
80	S/L	LP	276	236	164	125	100	50	30	30	160	125	17	9	11
90	S	-	301	251	183	140	125	56	34	35	174	155	17	9	12
90	L	SP/LP	326	276											
100	L/LA	LP/AP	366	306	201	160	140	63	37	30	192	175	22	12	15
112	-	-	386	326	226	190	140	70	40	34	224	175	22	12	15
112	M	MP	411	351											

Motor Frame	Efficiency		Shaft							Terminal Box				
	IE1	IE3	ØD		DB	E	EB	GA	F	H	AD	HH	LL	AG	O
63	S/L	-	11	+0.008 -0.003	M4	23	16	12.5	4	63	115	12	100	100	M20 x 1.5
71	S/L	-	14	+0.008 -0.003	M5	30	20	16.0	5	71	124	20	100	100	M20 x 1.5
80	S/L	LP	19	+0.009 -0.004	M6	40	32	21.5	6	80	142	22	114	114	M25 x 1.5
90	S	-	24	+0.009 -0.004	M8	50	40	27.0	8	90	147	26	114	114	M25 x 1.5
90	L	SP													
100	L/LA	LP/AP	28	+0.009 -0.004	M10	60	50	31.0	8	100	169	32	114	114	M32 x 1.5
112	M	-	28	+0.009 -0.004	M10	60	50	31.0	8	112	179	35	114	114	M32 x 1.5
112	-	MP													

Send Quote Requests to info@automatedpt.com
Call +1(800)985-6929 To Order or Order Online At Nordgearmotors.com

Standard Motor

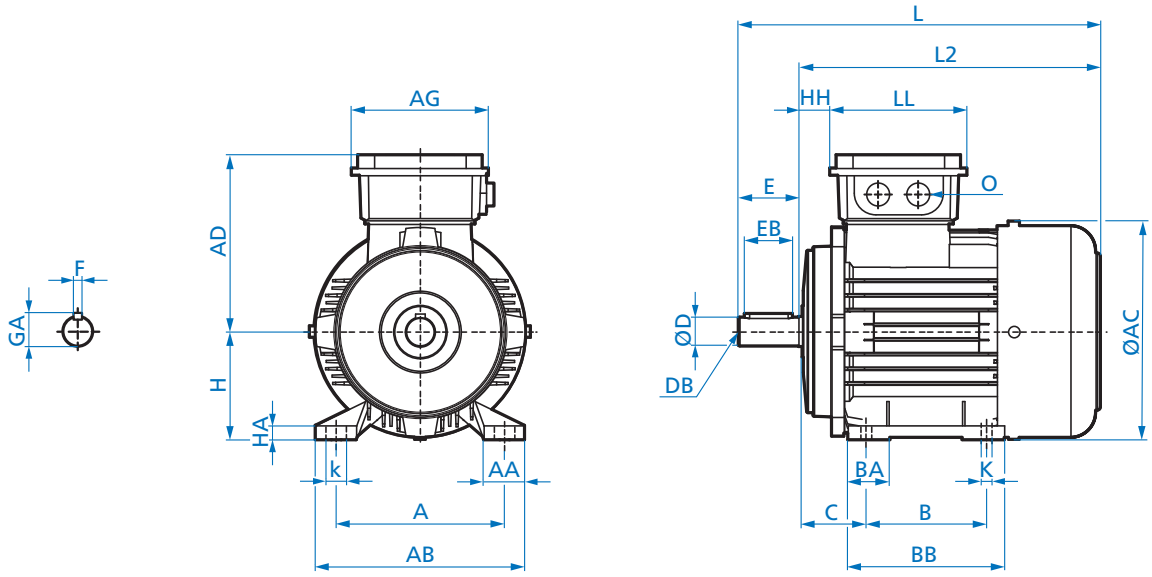

Motor Frame	Efficiency		Overall			Feet									
	IE1	IE3	L	L2	ØAC	A	B	C	AA	BA	AB	BB	k	K	HA
132	S	-	453	373	266	216	178	89	58	37	260	218	89	14	18
132	M/MA	SP/MP	491	411											
160	M	MP	602	492	319	254	210	108	72	52	318	264	30	14.5	25
160	L	-					254					308			
160	-	LP	646	536	319	254	254	108	72	52	318	308	30	14.5	25
180	-	MP	724	614	362	279	241	121	88.5	-	340	281	30	14.5	27
180	-	LP					279					319			
225	-	SP	882	742	443	356	286	149	79	66	443	359	25	20	20
225	-	MP	882	742	443	356	311	149	79	66	443	359	25	20	20

Motor Frame	Efficiency		Shaft							Terminal Box				
	IE1	IE3	ØD		DB	E	EB	GA	F	H	AD	HH	LL	AG	O
132	S	-	38	+0.018 +0.002	M12	80	70	41.0	10	132	204	47	122	122	M32 x 1.5
132	M/MA	SP/MP													
160	M	MP	42	+0.018 +0.002	M16	110	90	45.0	12	160	242	52	186	186	M40 x 1.5
160	L	-													
160	-	LP	42		M16	110	90	45.0	12	160	242	52	186	186	M40 x 1.5
180	-	MP	48	+0.021 +0.002	M16	110	100	51.5	14	180	259	54	186	186	M40 x 1.5
180	-	LP													
225	-	SP	60	+0.030 +0.011	M20	140	125	64	18	225	347	94	245	245	M50 X 1.5
225	-	MP	60		M20	140	125	64	18	225	347	94	245	245	M50 X 1.5

Send Quote Requests to info@automatedpt.com
Call +1(800)985-6929 To Order or Order Online At Nordgearmotors.com

IEC B5 Flanged Motors

Standard Motor

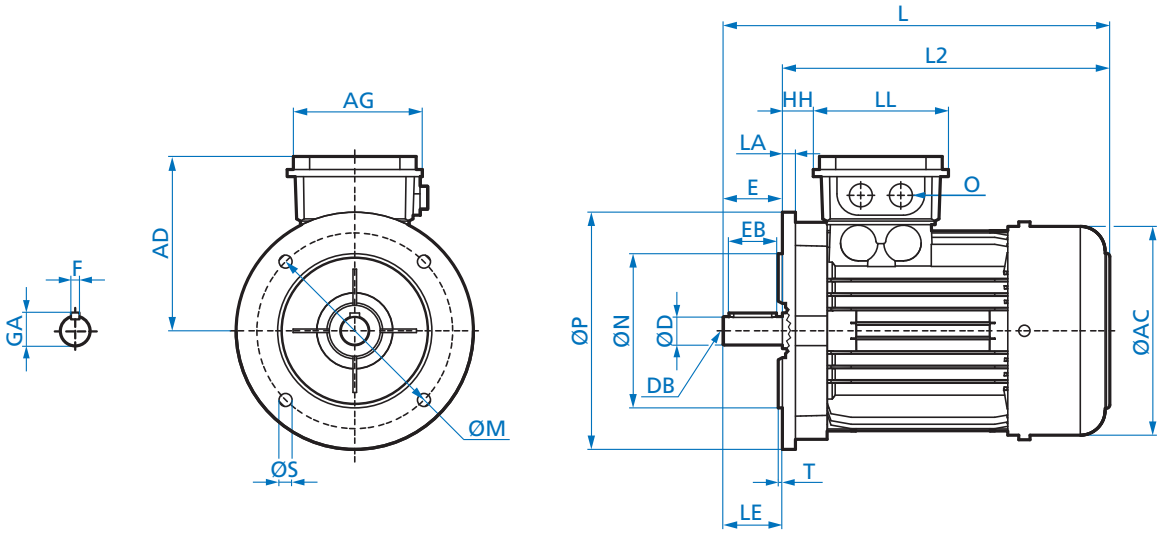

Motor Frame	Efficiency		Flange	Overall			Mounting Flange					
	IE1	IE3	Size	L	L2	ØAC	M	N	P	LA	T	S
63	S/L	-	A140	215	192	129	115	95 +0.013 -0.009	140	10	3.0	9
71	S/L	-	A160	244	214	146	130	110 +0.013 -0.009	160	10	3.5	9
80	S/L	SP/LP	A200	276	236	164	165	130 +0.014 -0.011	200	11	3.5	11
90	S/L	SP/LP	A200	326	276	183	165	130 +0.014 -0.011	200	11	3.5	11
100	L/LA	LP/AP	A250	366	306	201	215	180 +0.014 -0.011	250	15	4.0	13.5
112	M	-	A250	386	326	226	215	180 +0.014 -0.011	250	15	4.0	13
112	-	MP	A250	411	351							

Motor Frame	Efficiency		Flange	Shaft							Terminal Box				
	IE1	IE3	Size	ØD	DB	E	LE	EB	GA	F	AD	HH	LL	AG	O
63	S/L	-	A140	11 +0.008 -0.003	M4	23	23	16	12.5	4	115	12	100	100	M20 x 1.5
71	S/L	-	A160	14 +0.008 -0.003	M5	30	30	20	16.0	5	124	20	100	100	M20 x 1.5
80	S/L	SP/LP	A200	19 +0.009 -0.004	M6	40	40	32	21.5	6	142	22	114	114	M25 x 1.5
90	S/L	SP/LP	A200	24 +0.009 -0.004	M8	50	50	40	27.0	8	147	26	114	114	M25 x 1.5
100	L/LA	LP/AP	A250	28 +0.009 -0.004	M10	60	60	50	31.0	8	169	32	114	114	M32 x 1.5
112	M	-	A250	28 +0.009 -0.004	M10	60	60	50	31.0	8	179	35	114	114	M32 x 1.5
112	-	MP	A250												

Send Quote Requests to info@automatedpt.com
Call +1(800)985-6929 To Order or Order Online At Nordgearmotors.com

Standard Motor

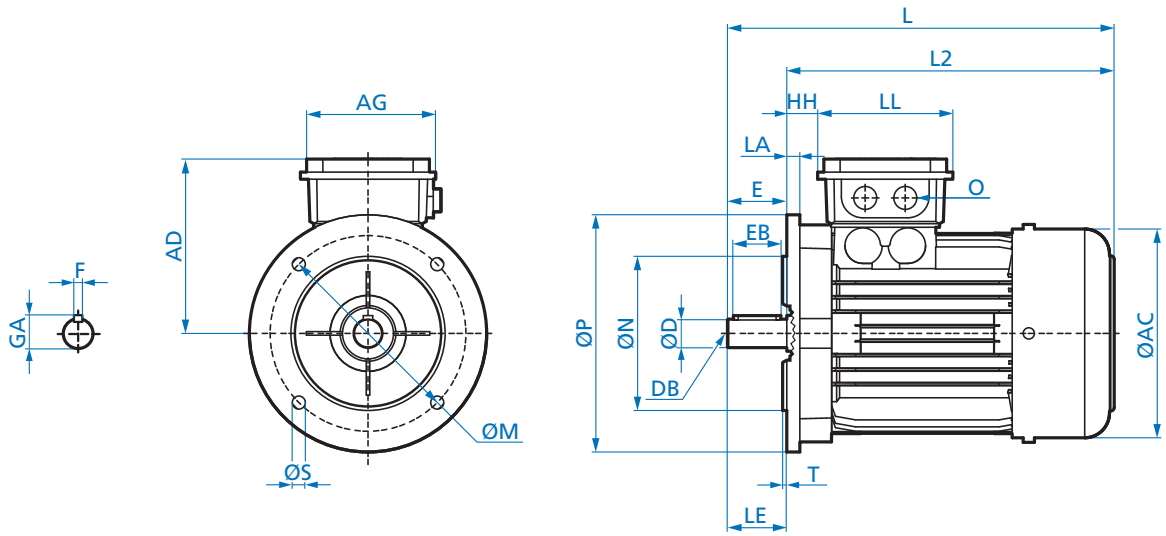

Motor Frame	Efficiency		Flange Size	Overall			Mounting Flange					
	IE1	IE3		L	L2	ØAC	M	N	P	LA	T	S
132	S/M/MA	SP/MP	A300	491	411	266	265	230 +0.016 -0.013	300	20	4.0	13.0
160	M/L	SP/MP	A350	602	492	319	300	250 +0.016 -0.013	350	20	5.0	17.5
160	-	LP	A350	646	536							
180	MX	-	A350	602	492	319	300	250 +0.016 -0.013	350	20	5.0	17.5
180	LX	-	A350	646	536							
180	-	MP/LP	A350	724	614	362	300	250	350	14	5.0	17.5
200	LX	-	A400	724	614	362	350	300 +0.000 -0.032	400	14	5.0	17.5
225	-	SP	A450	882	742	443	400	350 +0.000 -0.036	450	20	5.0	17.5
225	-	MP	A450	882	742	443	400	350	450	20	5.0	17.5

Motor Frame	Efficiency		Flange Size	Shaft							Terminal Box				
	IE1	IE3		ØD	DB	E	LE	EB	GA	F	AD	HH	LL	AG	O
132	S/M/MA	SP/MP	A300	38 +0.018 +0.002	M12	80	80	70	41.0	10	204	47	122	122	M32 x 1.5
160	M/L	SP/MP	A350	42 +0.018 +0.002	M16	110	110	90	45.0	12	242	52	186	186	M40 x 1.5
160	-	LP	A350												
180	MX	-	A350	48 +0.018 +0.002	M16	110	110	100	51.5	12	242	52	186	186	M40 x 1.5
180	LX	-	A350												
180	-	MP/LP	A350	48	M16	110	110	100	51.5	14	259	54	186	186	M40 x 1.5
200	LX	-	A400	55 +0.021 +0.002	M16	110	110	100	59.0	14	259	54	186	186	M40 x 1.5
225	-	SP	A450	60 +0.030 +0.011	M20	140	140	125	64.0	18	347	94	245	245	M50 X 1.5
225	-	MP	A450	60	M20	140	140	125	64.0	18	347	94	245	245	M50 X 1.5

Send Quote Requests to info@automatedpt.com
Call +1(800)985-6929 To Order or Order Online At Nordgearmotors.com

IEC B5 Flanged Motor Options

Option WE - 2nd Shaft Extension

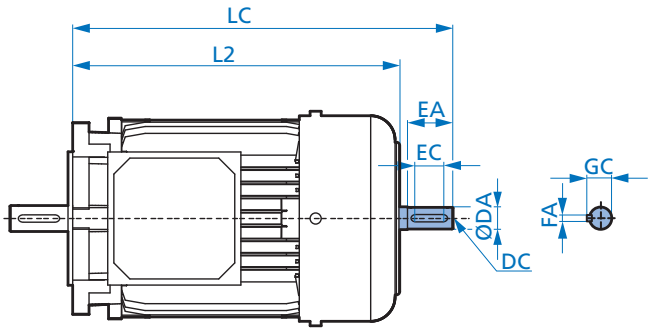

Option HR - Hand Wheel

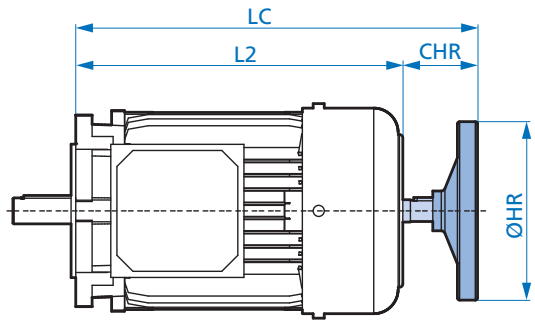

Option RD - Canopy Drip Cover

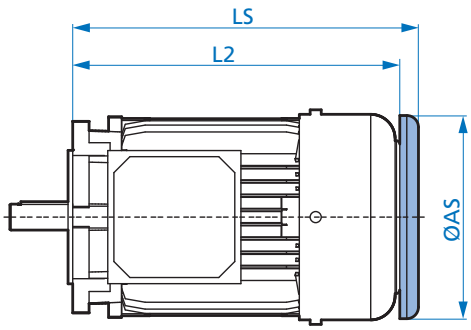

Option RDD - Double Fan Cover

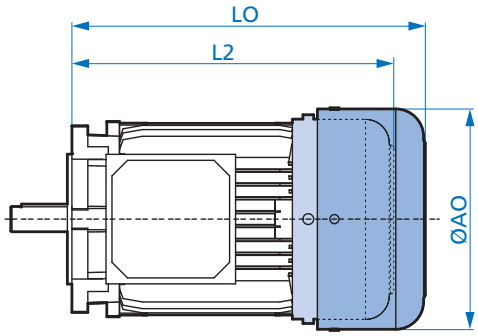

Motor Frame	Efficiency			WE								HR			RD		RDD	
	IE1	IE3	L2	LC	ØDA		EA	EC	DC	GC	FA	LC	ØHR	CHR	LS	ØAS	LO	ØAO
63	S/L	-	192	215	11	+0.008 -0.003	23	16	M4	12.5	4	231	100	39	203	123	218	138
71	S/L	-	214	238	11	+0.008 -0.003	23	16	M4	12.5	4	254	100	40	225	138	238	156
80	S/L	SP/LP	236	269	14	+0.008 -0.003	30	20	M5	16.0	5	285	100	49	251	156	262	176
90	S/L	SP/LP	276	323	19	+0.009 -0.004	40	32	M6	21.5	6	343	160	67	291	176	307	194
100	L/LA	LP/AP	306	362	24	+0.009 -0.004	50	40	M8	27.0	8	382	160	76	321	194	334	218
112	M	-	326	380	24	+0.009 -0.004	50	40	M8	27.0	8	400	160	74	341	218	364	258
112	-	MP	351	405	24		50	40	M8	27.0	8	425	160	74	366	218	389	258
132	S/M	SP/MP	411	509	32	+0.011 -0.005	80	70	M12	35.0	10	530	200	119	428	257	452	310
160	M/L	MP	492	611	42	+0.018 +0.002	110	90	M16	45.0	12	634	315	142	509	310	537	367
160	-	LP	536	655	42		110	90	M16	45.0	12	678	315	142	553	310	581	367
180	MX	-	492	611	42	+0.018 +0.002	110	90	M16	49.0	12	634	315	142	509	310	537	367
180	LX	-	536	655	42		110	90	M16	49.0	12	678	315	142	553	310	581	367
180	-	MP/LP	614	733	48		110	100	M16	51.5	14	756	315	142	631	348	684	403
200	LX	-	614	733	48	+0.018 +0.002	110	100	M16	51.5	14	756	315	142	631	348	684	403
225	-	SP	742	862	55	+0.030 +0.011	110	100	M20	59.3	16	-	-	-	828.5	348	826	519
225	-	MP	742	862	55		110	100	M20	59.3	16	-	-	-	828.5	348	826	519

Send Quote Requests to info@automatedpt.com
Call +1(800)985-6929 To Order or Order Online At Nordgearmotors.com

Option IG - Incremental Encoder

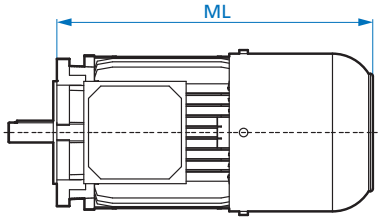

Option MG - Magnetic Encoder

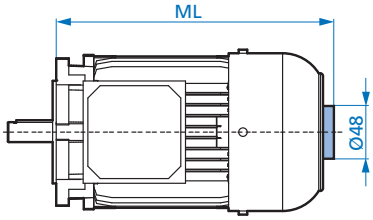

MG + RD

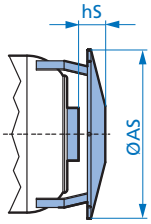

Option F - Forced Cooling Fan

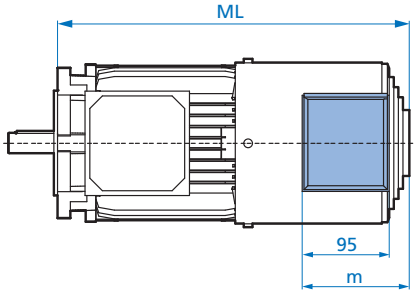

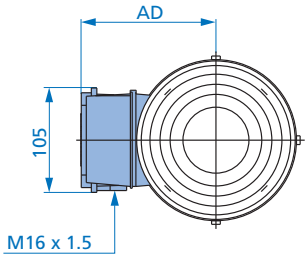

F + RD

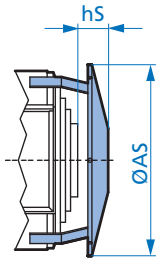

Option IG-F - Incremental Encoder & Forced Cooling Fan

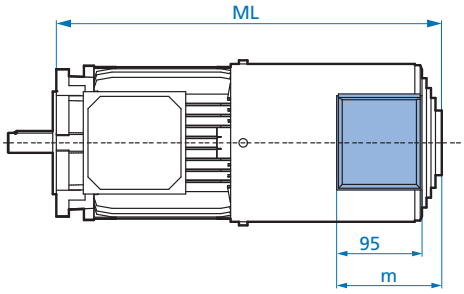

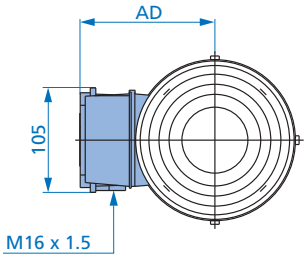

IG-F + RD

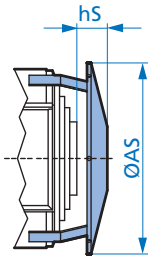

Motor Frame	Efficiency		IG	MG	MG + RD		F			F + RD		IG-F			IG-F + RD	
	IE1	IE3	ML	ML	hs	ØAS	ML	m	AD	hs	ØAS	ML	m	AD	hs	ØAS
63	S/L	-	247	202.5	11.0	123	280	107	114	37	133	350	107	133	37	133
71	S/L	-	270	225.5	11.0	138	303	107	123	37	150	358	107	150	37	150
80	S/L	SP/LP	297	246	10.0	156	326	107	132	40	170	376	107	170	40	170
90	S/L	SP/LP	348	290	14.0	176	380	117	142	30	188	425	117	188	30	188
100	L/LA	LP/AP	375	318.5	12.5	194	401	117	151	28	210	461	117	210	28	210
112	M	-	394	338.5	12.5	218	425	117	163	33	249	475	117	249	33	249
112	-	MP	419	363	12.0	218	450	117	163	33	249	500	117	249	33	249
132	S/M	SP/MP	474	421	10.0	257	526	127	183	25	300	566	127	300	25	300
160	M/L	MP	562	508	10.5	310	642	127	209.5	32	338	727	127	338	32	338
160	-	LP	606	552	10.5	310	681	127	209.5	32	338	771	127	338	32	338
180	MX	-	562	508	10.5	310	642	127	209.5	32	338	727	127	338	32	338
180	LX	-	606	552	10.5	310	681	127	209.5	32	338	771	127	338	32	338
180		MP/LP	684	627	10.5	348	767	127	209.5	32	338	847	127	338	32	338
200	LX	-	684	627	10.5	348	767	127	209.5	32	338	847	127	338	32	338
225	-	SP	809	-	-	-	942.5	144	249.5	-	-	1032.5	144	249.5	-	-
225	-	MP	809	-	-	-	942.5	144	249.5	-	-	1032.5	144	249.5	-	-

Send Quote Requests to info@automatedpt.com
Call +1(800)985-6929 To Order or Order Online At Nordgearmotors.com

IEC B5 Flanged Motor Options

Option OL - Without Fan

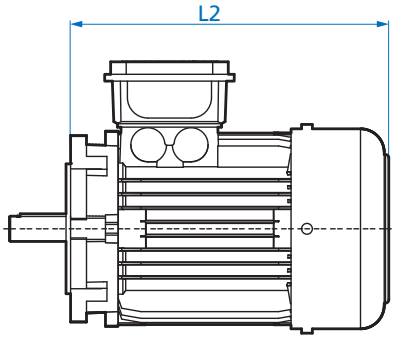

Option OL/H - Without Fan Cover

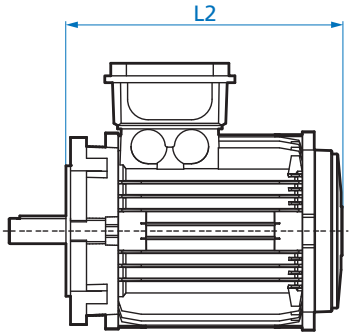

Option EKK - One Piece Terminal Box

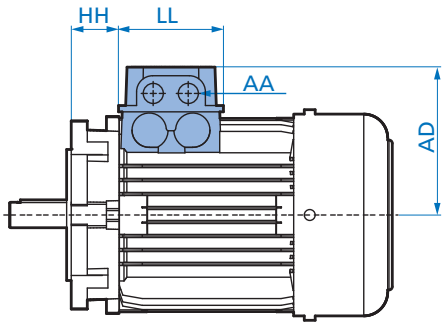

Option MS - Quick Power Plug Connector

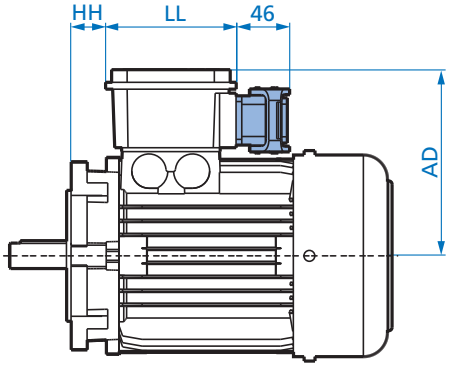

Motor Frame	Efficiency		OL	OL/H	EKK				MS		
	IE1	IE3	L2	L2	HH	LL	AD	AA	HH	LL	AD
63	S/L	-	192	160	25	75	100	M16 x 1.5	5	114	140
71	S/L	-	214	177	33	75	109	M16 x 1.5	13	114	149
80	S/L	SP/LP	236	196	33	92	124	M20 x 1.5	22	114	158
90	S/L	SP/LP	276	233	37	92	129	M20 x 1.5	26	114	163
100	L/LA	LP/AP	306	262	43	92	140	M20 x 1.5	32	114	174
112	M	-	326	276	56	92	150	M20 x 1.5	45	114	184
112	-	MP	351	301	56	92	150	M20 x 1.5	45	114	184
132	S/M	SP/MP	411	351	56	104	174	M25 x 1.5	47	122	204
160	M/L	MP	492	417							
160	-	LP	536	461							
180	MX	-	492	417							
180	LX	-	536	461							
180	-	MP/LP	614	509							
200	LX	-	614	509							

Send Quote Requests to info@automatedpt.com
Call +1(800)985-6929 To Order or Order Online At Nordgearmotors.com

Option ECR - Single Phase with Start-up & Capacitor

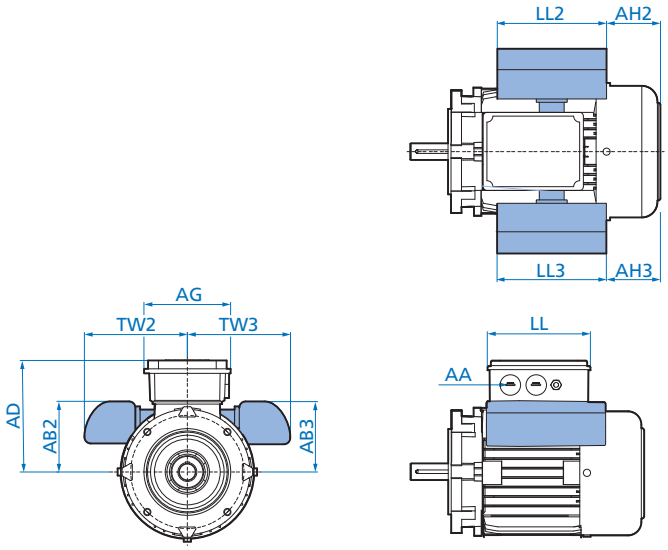

Option EAR1 - Single Phase with Start-up & Capacitor

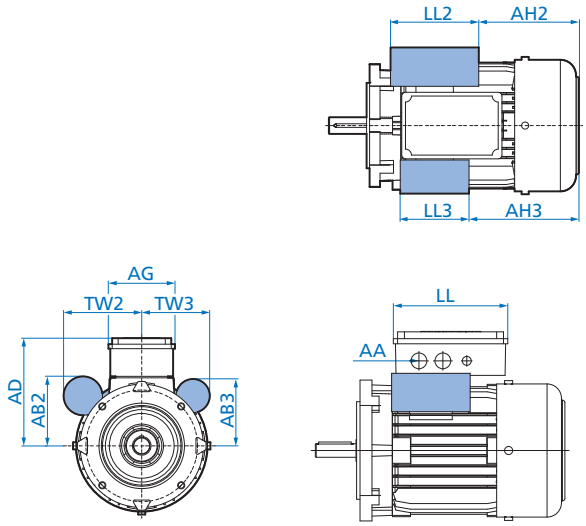

Motor Type		AD	AG	AB2	AB3	AH2	AH3	LL2	LL3	TW2	TW3	LL	AA
63 LA	ECR	123	89	90	90	31	31	126	126	111	111	134	M25 x 1.5
71 L/LA	ECR	132	89	106	97	29	44	146	126	122	111	134	M25 x 1.5
80 L/LA	ECR	142	108	113	109	40	60	146	126	128	123	153	M25 x 1.5
90 L	ECR	147	108	118	114	76	96	146	126	128	123	153	M25 x 1.5
90 LB/LX	ECR	147	108	118	118	76	76	146	146	128	123	153	M25 x 1.5
63 L/LA	EAR1	123	89	70	68	84	95	92	70	85	73	134	M25 x 1.5
71 L/LA	EAR1	132	89	79	74	86	109	117	70	95	80	134	M25 x 1.5
80 L/LA	EAR1	142	108	88	89	113	111	87	92	95	86	153	M25 x 1.5
90 L/LB	EAR1	147	108	93	89	114	122	118	92	105	91	153	M25 x 1.5
63 L/LA	EHB1	115	100	70	-	95	-	70	-	81	-	100	M20 x 1.5
71 L/LA	EHB1	124	100	79	-	109	-	70	-	85	-	100	M20 x 1.5
80 L/LA	EHB1	142	114	88	-	95	-	87	-	113	-	114	M25 x 1.5
90 L/LB	EHB1	147	114	93	-	121	-	145	-	98	-	114	M25 x 1.5
63 S/L	EST	115	100	70	-	95	-	70	-	85	-	100	M20 x 1.5
71 S/L	EST	124	100	79	-	98	-	92	-	85	-	100	M20 x 1.5
80 S/L	EST	142	114	88	-	97	-	120	-	98	-	114	M25 x 1.5
90 S/L	EST	147	114	93	-	121	-	145	-	113	-	114	M25 x 1.5

Send Quote Requests to info@automatedpt.com
Call +1(800)985-6929 To Order or Order Online At Nordgearmotors.com

IEC B5 Flanged Brakemotors

Standard Brakemotor

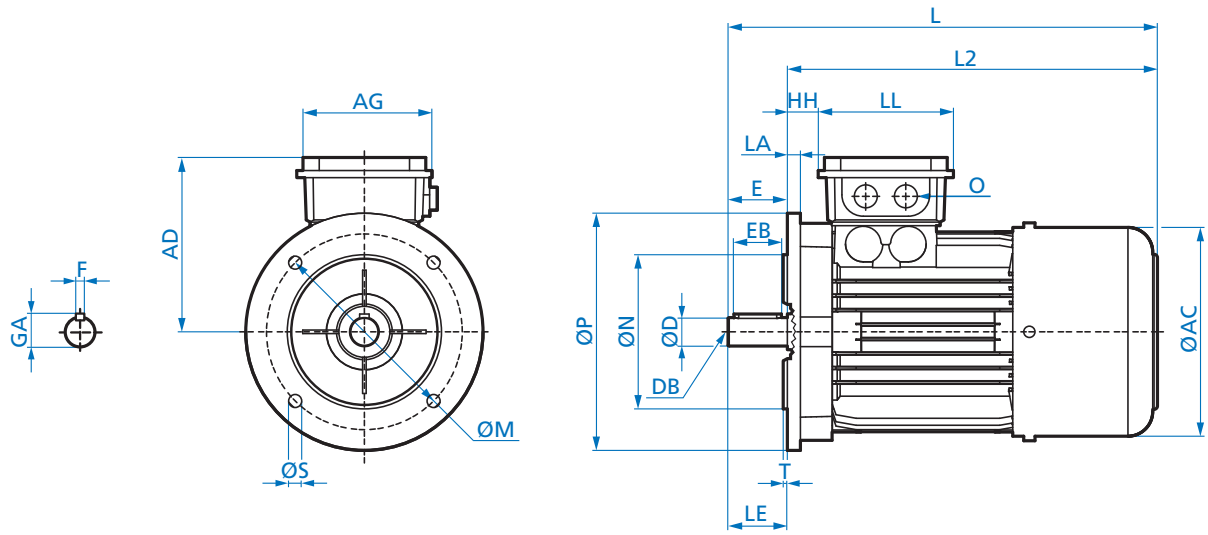

Motor Frame	Efficiency		Flange Size	Brake Size	Overall			Mounting Flange					
	IE1	IE3			L	L2	ØAC	M	N	P	LA	T	S
63	S/L	-	A140	5	271	248	129	115	95 +0.013 -0.009	140	10	3.0	9.0
71	S/L	-	A160	5	302	272	146	130	110 +0.013 -0.009	160	10	3.5	9.0
80	S	SP	A200	5	340	300	164	165	130 +0.014 -0.011	200	11	3.5	11.0
80	L	LP	A200	10									
90	S/L	SP/LP	A200	20	401	351	183	165	130 +0.014 -0.011	200	11	3.5	11.0
100	L	LP	A250	20	457	397	201	215	180 +0.014 -0.011	250	15	4.0	13.5
100	LA	AP	A250	40									
112	M	-	A250	60	480	420	226	215	180 +0.014 -0.011	250	15	4.0	13.0
112	-	MP	A250	60	505	445							

Motor Frame	Efficiency		Flange Size	Brake Size	Shaft							Terminal Box				
	IE1	IE3			ØD	DB	E	LE	EB	GA	F	AD	HH	LL	AG	O
63	S/L	-	A140	5	11 +0.008 -0.003	M4	23	23	16	12.5	4	123	19	134	89	M20 x 1.5
71	S/L	-	A160	5	14 +0.008 -0.003	M5	30	30	20	16.0	5	132	27	134	89	M20 x 1.5
80	S	SP	A200	5	19 +0.009 -0.004	M6	40	40	32	21.5	6	142	26	153	108	M25 x 1.5
80	L	LP	A200	10												
90	S/L	SP/LP	A200	20	24 +0.009 -0.004	M8	50	50	40	27.0	8	147	30	153	108	M25 x 1.5
100	L	LP	A250	20	28 +0.009 -0.004	M10	60	60	50	31.0	8	173	36	153	108	M32 x 1.5
100	LA	AP	A250	40												
112	M	-	A250	60	28 +0.009 -0.004	M10	60	60	50	31.0	8	182	39	153	108	M32 x 1.5
112	-	MP	A250	60												

Send Quote Requests to info@automatedpt.com
Call +1(800)985-6929 To Order or Order Online At Nordgearmotors.com

Standard Brakemotor

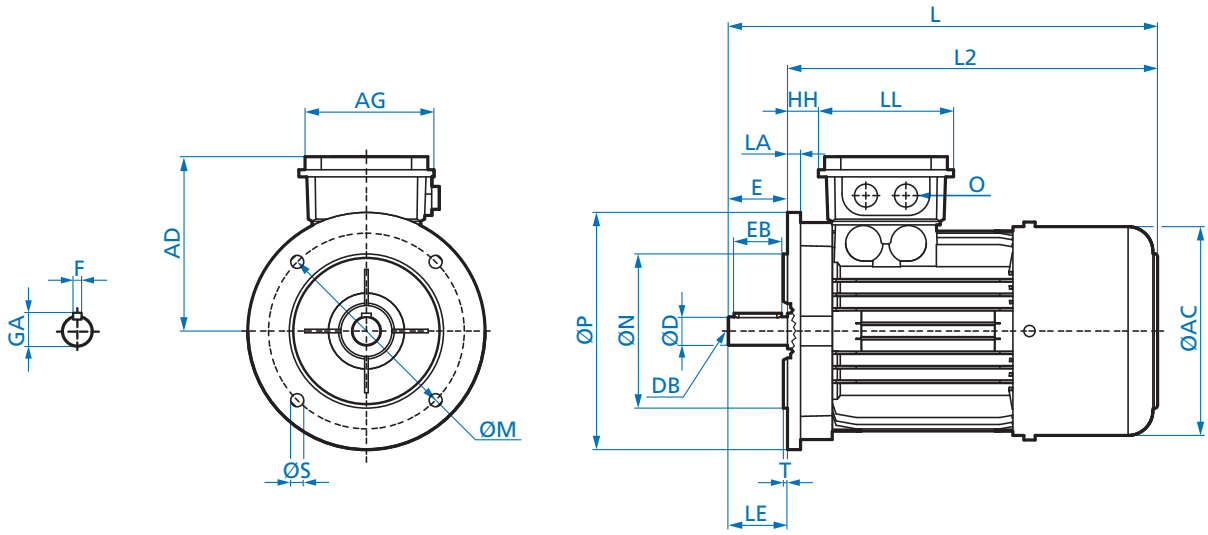

Motor Frame	Efficiency		Flange Size	Brake Size	Overall			Mounting Flange						
	IE1	IE3			L	L2	ØAC	M	N		P	LA	T	S
132	S	SP	A300	60	598	518	266	265	230	+0.016 -0.013	300	20	4.0	13.0
132	M	MP	A300	100										
132	MA	-	A300	150										
160	M	MP	A350	150	737	627	319	300	250	+0.016 -0.013	350	20	5.0	17.5
160	L	-	A350	250	737	627								
160	-	LP	A350	250	781	671								
180	MX	-	A350	250	737	627	319	300	250	+0.016 -0.013	350	20	5.0	17.5
180	LX	-	A350	250	781	671								
180	-	MP/LP	A350	250	851	741	362					14		
200	LX	-	A400	400	851	741	362	350	300	+0.000 -0.032	400	14	5.0	17.5
225	-	SP	A450	400	1062	922	443	400	350	+0.000 -0.036	450	20	5.0	17.5
225	-	MP	A450	400	1062	922	443	400	350		450	20	5.0	17.5

Motor Frame	Efficiency		Flange Size	Brake Size	Shaft							Terminal Box				
	IE1	IE3			ØD		DB	E	LE	EB	GA	F	AD	HH	LL	AG	O
132	S	SP	A300	60	38	+0.018 +0.002	M12	80	80	70	41.0	10	201	40	185	139	M32 x 1.5
132	M	MP	A300	100													
132	MA	-	A300	150													
160	M	MP	A350	150	42	+0.018 +0.002	M16	110	110	90	45.0	12	242	52	186	186	M40 x 1.5
160	L	-	A350	250													
160	-	LP	A350	250													
180	MX	-	A350	250	48	+0.018 +0.002	M16	110	110	100	51.5	12	242	52	186	186	M40 x 1.5
180	LX	-	A350	250													
180	-	MP/LP	A350	250								14	259	54			
200	LX	-	A400	400	55	+0.021 +0.002	M16	110	110	100	59.0	14	259	54	186	186	M40 x 1.5
225	-	SP	A450	400	60	+0.030 +0.011	M20	140	140	125	64.0	18	347	94	245	245	M50 X 1.5
225	-	MP	A450	400	60		M20	140	140	125	64.0	18	347	94	245	245	M50 X 1.5

Send Quote Requests to info@automatedpt.com
Call +1(800)985-6929 To Order or Order Online At Nordgearmotors.com

IEC B5 Flanged Brakemotor Options

Option WE - 2nd Shaft Extension

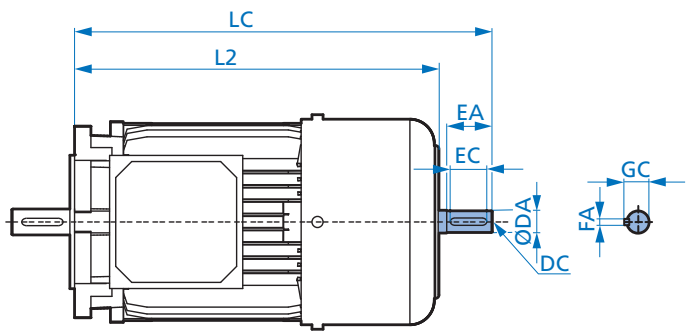

Option HR - Hand Wheel

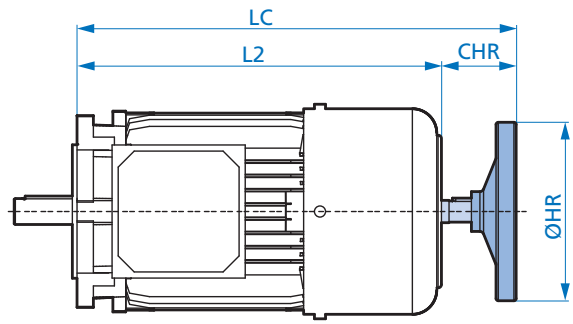

Option RD - Canopy Drip Cover

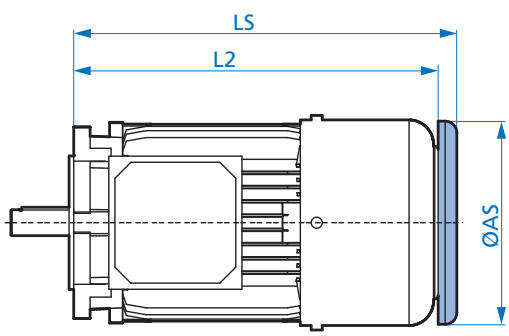

Option RDD - Double Fan Cover

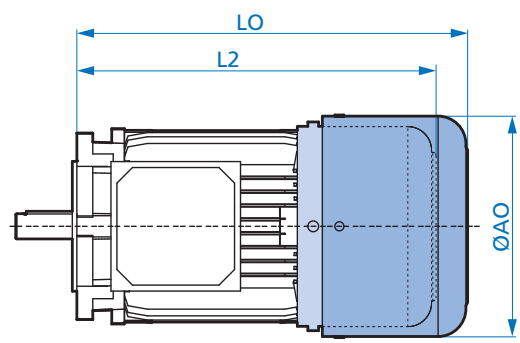

Motor Frame	Efficiency			WE								HR			RD		RDD	
	IE1	IE3	L2	LC	ØDA		EA	EC	DC	GC	FA	LC	ØHR	CHR	LS	ØAS	LO	ØAO
63	S/L	-	248	275	11	+0.008 -0.003	23	16	M4	12.5	4	291	100	43	259	123	274	138
71	S/L	-	272	299	11	+0.008 -0.003	23	16	M4	12.5	4	315	100	43	283	138	296	156
80	S/L	SP/LP	300	334	14	+0.008 -0.003	30	20	M5	16.0	5	350	100	50	315	156	326	176
90	S/L	SP/LP	351	389	14	+0.009 -0.004	30	20	M5	21.5	6	409	160	58	366	176	381	194
100	L/LA	LP/AP	397	457	24	+0.009 -0.004	50	40	M8	27.0	8	477	160	80	412	194	425	218
112	M	-	420	477	24	+0.009 -0.004	50	40	M8	27.0	8	497	160	77	435	218	458	258
112	-	MP	445	502								522			460		483	
132	S/M	SP/MP	518	608	32	+0.011 -0.005	80	70	M12	35.0	10	629	200	111	535	257	554	310
160	M/L	MP	627	746	42	+0.018 +0.002	110	90	M16	45.0	12	769	315	142	644	310	672	367
160	-	LP	671	790								813			688		716	
180	MX	-	627	746	42	+0.018 +0.002	110	90	M16	49.0	12	769	315	142	644	310	672	367
180	LX	-	671	790								813			688		716	
180	-	MP/LP	741	860	48	+0.018 +0.002	110	100	M16	51.5	14	883	315	142	758	348	811	403
200	LX	-	741	860	48	+0.018 +0.002	110	100	M16	51.5	14	883	315	142	758	348	811	403
225	-	SP	922	1042	55	+0.030 +0.011	110	100	M20	59.3	16	-	-	-	1008.5	348	1006	519
225	-	MP	922	1042	55	+0.030 +0.011	110	100	M20	59.3	16	-	-	-	1008.5	348	1006	519

Send Quote Requests to info@automatedpt.com
Call +1(800)985-6929 To Order or Order Online At Nordgearmotors.com

Option IG - Incremental Encoder

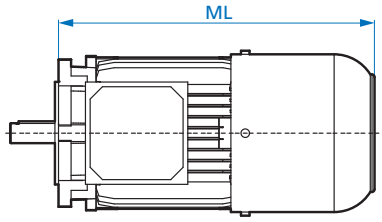

Option MG - Magnetic Encoder

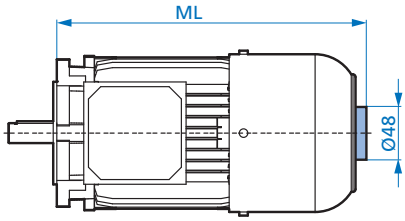

MG + RD

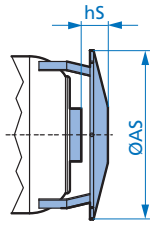

Option F - Forced Cooling Fan

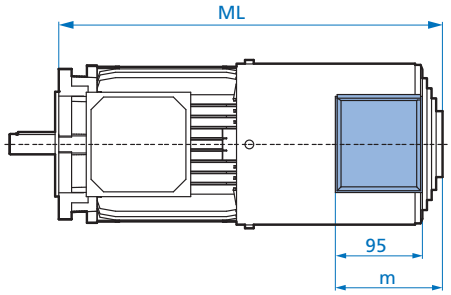

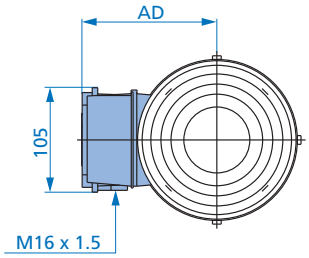

F + RD

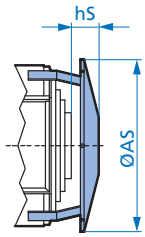

Option IG-F - Incremental Encoder & Forced Cooling Fan

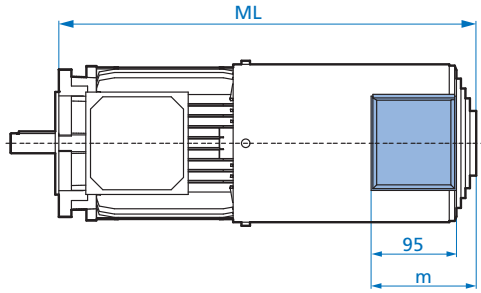

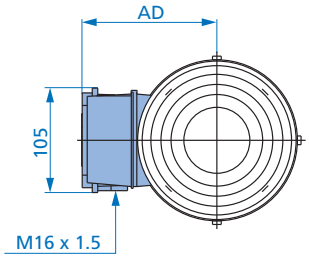

IG-F + RD

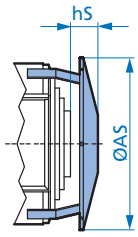

Motor Frame	Efficiency		IG	MG	MG + RD		F			-F + RD		IG-F			IG-F + RD	
	IE1	IE3	ML	ML	hs	ØAS	ML	m	AD	hs	AS	ML	m	AD	hs	AS
63	S/L	-	310	262.5	14.5	123	338	107	114	37	133	373	107	133	37	133
71	S/L	-	346	289	17	138	366	107	123	37	150	411	107	150	37	150
80	S/L	SP/LP	357	312	9.0	156	390	107	132	40	170	440	107	170	40	170
90	S/L	SP/LP	421	364	9.0	176	451	117	142	30	188	496	117	188	30	188
100	L/LA	LP/AP	467	410	8.5	194	502	117	151	28	210	537	117	210	28	210
112	M	-	484	432.5	9.0	218	525	117	163	33	249	560	117	249	33	249
112	-	MP	509	457.5	8.5	218	550					585				
132	S/M	SP/MP	583	526.5	11.5	257	643	127	183	25	300	673	127	300	25	300
160	M/L	MP	697	644	10.5	310	772	127	209.5	32	338	862	127	338	32	338
160	-	LP	741	688	10.5	310	816					906				
180	MX	-	697	644	10.5	310	772	127	209.5	32	338	862	127	338	32	338
180	LX	-	741	688	10.5	310	816					906				
180	-	MP/LP	811	759	10.5	348	887					992				
200	LX	XP	811	759	10.5	348	887	127	209.5	32	338	992	127	338	32	338
225	-	SP	989	-	-	-	1112.5	144	249.5	-	-	1202.5	144	249.5	-	-
225	-	MP	989	-	-	-	1112.5	144	249.5	-	-	1202.5	144	249.5	-	-

Send Quote Requests to info@automatedpt.com
Call +1(800)985-6929 To Order or Order Online At Nordgearmotors.com

IEC B5 Flanged Brakemotor Options

Option OL - Without Fan

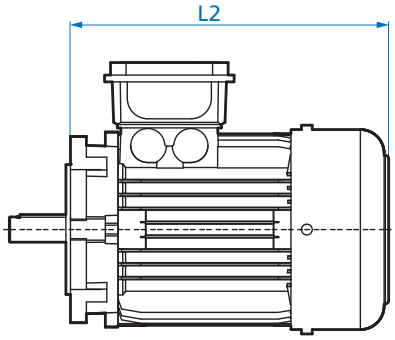

Option EKK - One Piece Terminal Box

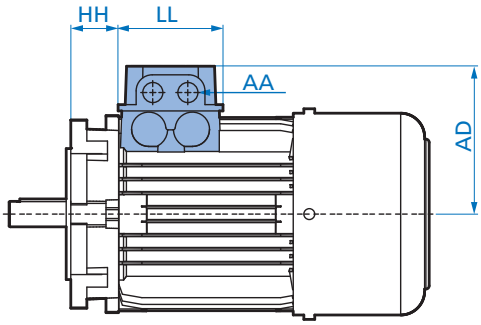

Option MS - Quick Power Plug Connector

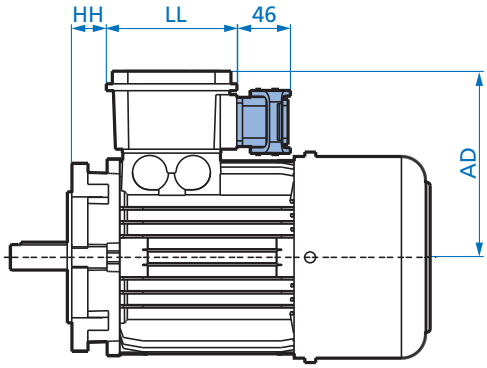

Motor Frame	Efficiency		OL	EKK				MS		
	IE1	IE3	L2	HH	LL	AD	AA	HH	LL	AD
63	S/L	-	248	25	75	100	M16 x 1.5	5	114	140
71	S/L	-	272	33	75	109	M16 x 1.5	13	114	149
80	S/L	SP/LP	300	33	92	124	M20 x 1.5	22	114	158
90	S/L	SP/LP	351	37	92	129	M20 x 1.5	26	114	163
100	L/LA	LP/AP	397	43	92	140	M20 x 1.5	32	114	174
112	M	-	420	56	92	150	M20 x 1.5	45	114	184
112	-	MP	445	56	92	150	M20 x 1.5	45	114	184
132	S/M	SP/MP	518	56	104	174	M25 x 1.5	47	122	204
160	M/L	MP	627							
160	-	LP	671							
180	MX	-	627							
180	LX	-	671							
180	-	MP/LP	741							
200	LX	-	741							

Send Quote Requests to info@automatedpt.com
Call +1(800)985-6929 To Order or Order Online At Nordgearmotors.com

Option ECR - Single Phase with Start-up & Capacitor

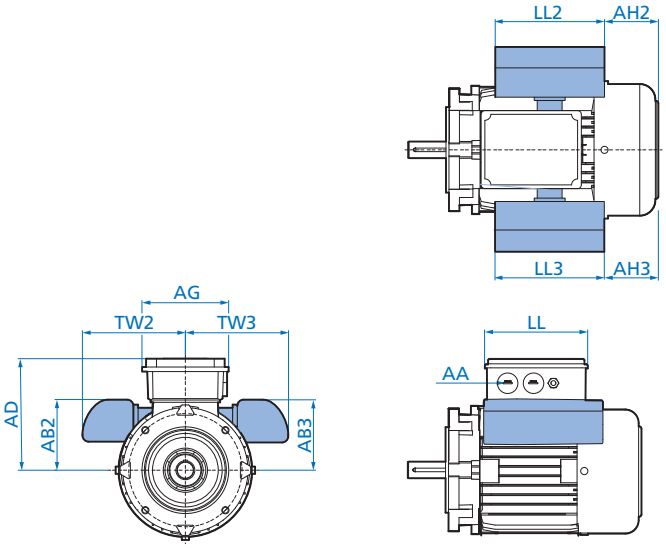

Option EAR1 - Single Phase with Start-up & Capacitor

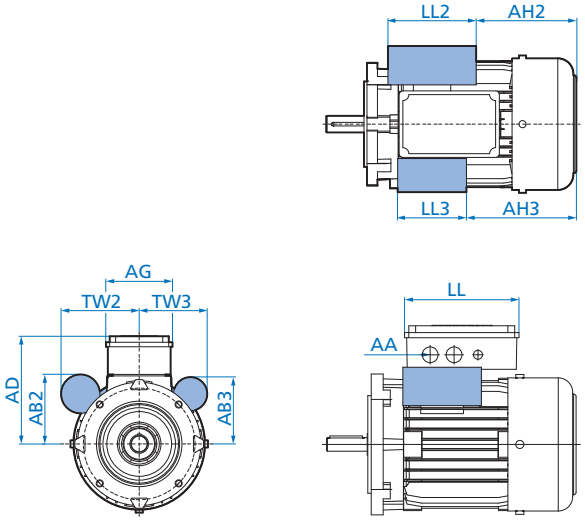

Motor Type		AD	AG	AB2	AB3	AH2	AH3	LL2	LL3	TW2	TW3	LL	AA
63 LA	ECR	140	108	90	90	87	87	126	126	111	111	153	M25 x 1.5
71 L/LA	ECR	149	108	106	97	87	102	146	126	122	111	153	M25 x 1.5
80 L/LA	ECR	142	108	113	109	104	124	146	126	128	123	153	M25 x 1.5
90 L	ECR	147	108	118	114	151	171	146	126	128	123	153	M25 x 1.5
90 LB/LX	ECR	147	108	118	118	151	151	146	146	128	123	153	M25 x 1.5
63 L/LA	EAR1	140	108	70	68	140	151	92	70	85	73	153	M25 x 1.5
71 L/LA	EAR1	149	108	79	74	144	167	117	70	95	80	153	M25 x 1.5
80 L/LA	EAR1	142	108	88	89	177	175	87	92	95	86	153	M25 x 1.5
90 L/LB	EAR1	147	108	93	89	189	197	118	92	105	91	153	M25 x 1.5
63 L/LA	EHB1	123	89	70	-	151	-	70	-	81	-	134	M20 x 1.5
71 L/LA	EHB1	132	89	79	-	167	-	70	-	85	-	134	M20 x 1.5
80 L/LA	EHB1	142	108	88	-	159	-	87	-	113	-	153	M25 x 1.5
90 L/LB	EHB1	147	108	93	-	196	-	145	-	98	-	153	M25 x 1.5
63 S/L	EST	123	89	70	-	151	-	70	-	85	-	134	M20 x 1.5
71 S/L	EST	132	89	79	-	156	-	92	-	85	-	134	M20 x 1.5
80 S/L	EST	142	108	88	-	161	-	120	-	98	-	153	M25 x 1.5
90 S/L	EST	147	108	93	-	196	-	145	-	113	-	153	M25 x 1.5

Send Quote Requests to info@automatedpt.com
Call +1(800)985-6929 To Order or Order Online At Nordgearmotors.com

IEC B14 Flanged Motors

Standard Motor

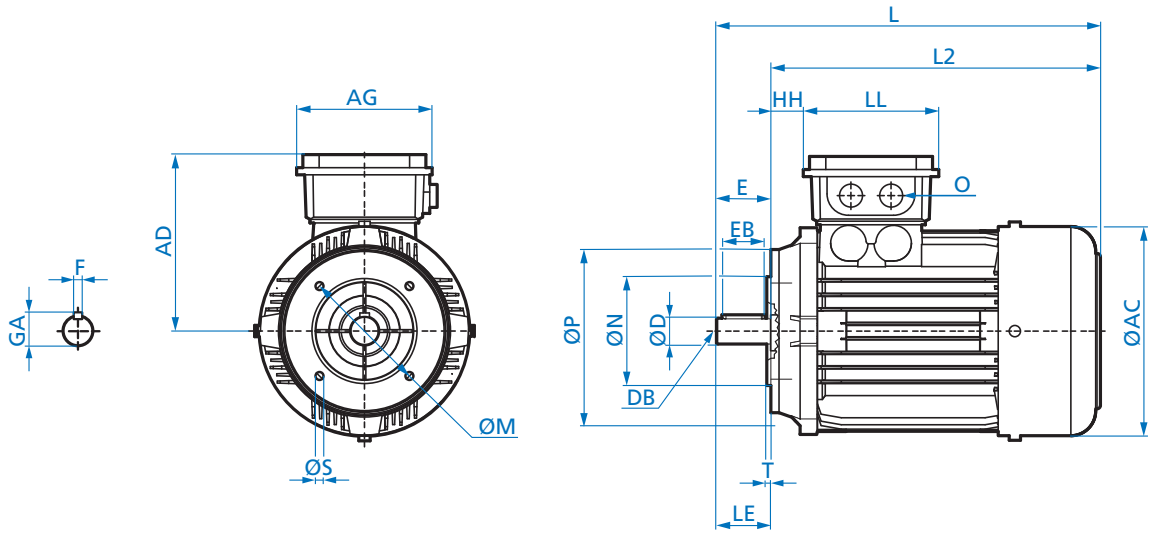

Motor Frame	Efficiency		Flange Size	Overall			Mounting Flange				
	IE1	IE3		L	L2	ØAC	M	N	P	T	S
63	S/L	-	C90	215	192	129	75	60 +0.012 -0.007	90	2.5	M5 x 8
71	S/L	-	C105	244	214	146	85	70 +0.012 -0.007	105	2.5	M6 x 12
80	S/L	SP/LP	C120	276	236	164	100	80 +0.012 -0.007	120	3.0	M6 x 12
90	S/L	SP/LP	C140	326	276	183	115	95 +0.013 -0.009	140	3.0	M8 x 15
100	L/LA	LP/AP	C160	366	306	201	130	110 +0.013 -0.009	160	3.5	M8 x 16
112	M	-	C160	386	326	226	130	110 +0.013 -0.009	160	3.5	M8 x 12
112	-	MP	C160	411	351						

Motor Frame	Efficiency		Flange Size	Shaft							Terminal Box				
	IE1	IE3		ØD	DB	E	LE	EB	GA	F	AD	HH	LL	AG	O
63	S/L	-	C90	11 +0.008 -0.003	M4	23	23	16	12.5	4	115	12	100	100	M20 x 1.5
71	S/L	-	C105	14 +0.008 -0.003	M5	30	30	20	16.0	5	124	20	100	100	M20 x 1.5
80	S/L	SP/LP	C120	19 +0.009 -0.004	M6	40	40	32	21.5	6	142	22	114	114	M25 x 1.5
90	S/L	SP/LP	C140	24 +0.009 -0.004	M8	50	50	40	27.0	8	147	26	114	114	M25 x 1.5
100	L/LA	LP/AP	C160	28 +0.009 -0.004	M10	60	60	50	31.0	8	169	32	114	114	M32 x 1.5
112	M	-	C160	28 +0.009 -0.004	M10	60	60	50	31.0	8	179	35	114	114	M32 x 1.5
112	-	MP	C160												

Send Quote Requests to info@automatedpt.com
Call +1(800)985-6929 To Order or Order Online At Nordgearmotors.com

Standard Motor

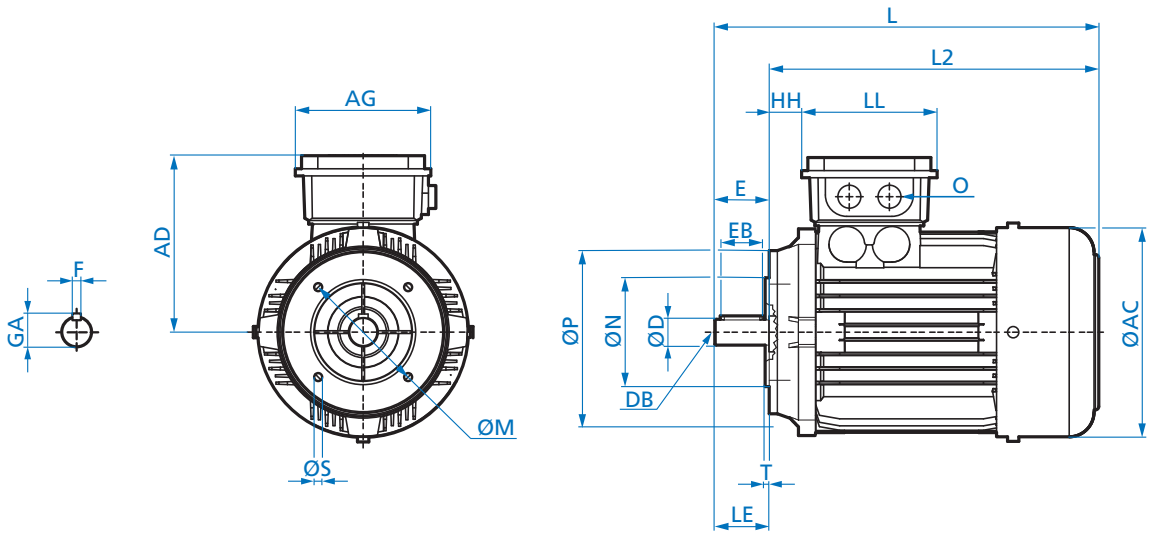

Motor Frame	Efficiency		Flange Size	Overall			Mounting Flange				
	IE1	IE3		L	L2	ØAC	M	N	P	T	S
132	S/M/MA	SP/MP	C200	491	411	266	165	130 $^{+0.014}_{-0.011}$	200	3.5	M10 x 18
160	M/L	SP/MP	C200	602	492	319	165	130 $^{+0.014}_{-0.011}$	200	3.5	M10 x 20
160	-	LP	C200	646	536						
180	MX	-	C200	602	492	319	165	130 $^{+0.014}_{-0.011}$	200	3.5	M10 x 20
180	LX	-	C200	646	536						

Motor Frame	Efficiency		Flange Size	Shaft							Terminal Box				
	IE1	IE3		ØD	DB	E	LE	EB	GA	F	AD	HH	LL	AG	O
132	S/M/MA	SP/MP	C200	38 $^{+0.018}_{+0.002}$	M12	80	80	70	41.0	10	204	47	122	122	M32 x 1.5
160	M/L	SP/MP	C200	42 $^{+0.018}_{+0.002}$	M16	110	110	90	45.0	12	242	52	186	186	M40 x 1.5
160	-	LP	C200												
180	MX	-	C200	48 $^{+0.018}_{+0.002}$	M16	110	110	100	51.5	12	242	52	186	186	M40 x 1.5
180	LX	-	C200												

Send Quote Requests to info@automatedpt.com
Call +1(800)985-6929 To Order or Order Online At Nordgearmotors.com

Dimensions
Conduit Box and Cable Entry

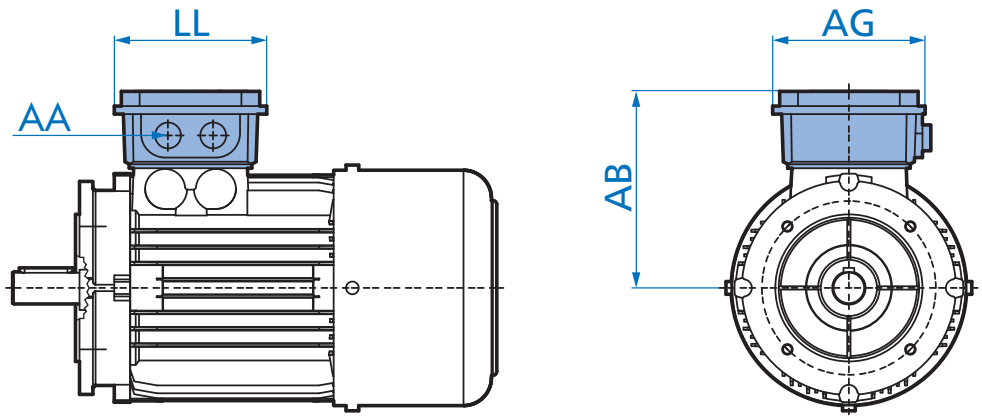

Motor Type		Motor Conduit Box & Cable Entry Dimensions							
60 Min.	Prem. Eff.	AB		LL		AG		AA	Conduit
(IE1)	(IE3)	inch	mm	inch	mm	inch	mm		Adapter
63 S/L	-	4.51	115	3.95	100	3.95	100	M20 x 1.5	1/2" NPT
71 S/L	-	4.86	124	3.95	100	3.95	100	M20 x 1.5	1/2" NPT
80 S	80 LP	5.59	142	4.49	114	4.49	114	M25 x 1.5	3/4" NPT
90 S/L	90 SP/LP	5.79	147	4.49	114	4.49	114	M25 x 1.5	3/4" NPT
100 L/LA	100 LP/AP	6.65	169	4.49	114	4.49	114	M32 x 1.5	1" NPT
112 M	112 MP	7.05	179	4.49	114	4.49	114	M32 x 1.5	1" NPT
132 S/M	132 SP/MP	8.03	204	4.80	122	4.80	122	M32 x 1.5	1" NPT
160 M/L	160 SP/MP/LP	9.53	242	7.32	186	7.32	186	M40 x 1.5	1" NPT
180 MX/LX	-	9.53	242	7.32	186	7.32	186	M40 x 1.5	1" NPT
-	180 MP/LP	10.18	259	7.32	186	7.32	186	M40 x 1.5	1" NPT
200 LX	-	10.18	259	7.32	186	7.32	186	M40 x 1.5	1" NPT
-	225 RP/SP/MP	13.68	348	9.65	245	9.65	245	M50 x 1.5	1-1/2" NPT
-	250 WP	13.68	348	9.65	245	9.65	245	M63 x 1.5	2" NPT

Send Quote Requests to info@automatedpt.com
Call +1(800)985-6929 To Order or Order Online At Nordgearmotors.com

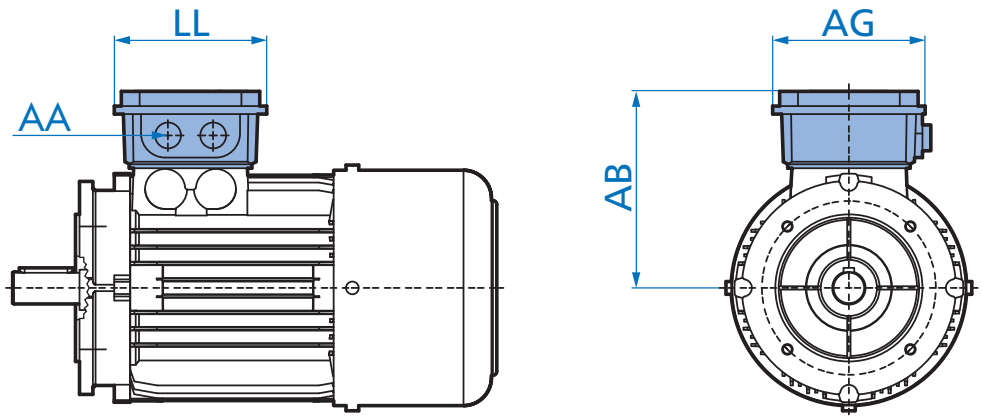

Motor Type		Brakemotor Conduit Box & Cable Entry Dimensions							
60 Min.	Prem. Eff.	AB		LL		AG		AA	Conduit
(IE1)	(IE3)	inch	mm	inch	mm	inch	mm		Adapter
63 S/L	-	4.84	123	5.28	134	3.50	89	M20 x 1.5	1/2" NPT
71 S/L	-	5.24	133	5.28	134	3.50	89	M20 x 1.5	1/2" NPT
80 S	80 LP	5.59	142	6.02	153	4.25	108	M25 x 1.5	3/4" NPT
90 S/L	90 SP/LP	5.79	147	6.02	153	4.25	108	M25 x 1.5	3/4" NPT
100 L/LA	100 LP/AP	6.77	172	6.02	153	4.25	108	M32 x 1.5	1" NPT
112 M	112 MP	7.17	182	6.02	153	4.25	108	M32 x 1.5	1" NPT
132 S/M	132 SP/MP	7.91	201	7.29	185	5.48	139	M32 x 1.5	1" NPT
160 M/L	160 SP/MP/LP	9.53	242	7.32	186	7.32	186	M40 x 1.5	1" NPT
180 MX/LX	-	9.53	242	7.32	186	7.32	186	M40 x 1.5	1" NPT
-	180 MP/LP	10.18	259	7.32	186	7.32	186	M40 x 1.5	1" NPT
200 LX	-	10.18	259	7.32	186	7.32	186	M40 x 1.5	1" NPT
-	225 RP/SP/MP	13.68	348	9.65	245	9.65	245	M50 x 1.5	1-1/2" NPT
-	250 WP	13.68	348	9.65	245	9.65	245	M63 x 1.5	2" NPT

Send Quote Requests to info@automatedpt.com
Call +1(800)985-6929 To Order or Order Online At Nordgearmotors.com

Send Quote Requests to info@automatedpt.com Call +1(800)985-6929 To Order or Order Online At Nordgearmotors.com

Notes

Send Quote Requests to info@automatedpt.com
Call +1(800)985-6929 To Order or Order Online At Nordgearmotors.com

Product Literature

Gear Units

NORDBLOC.1® Helical Inline
Catalog: G1013

UNICASE™ Helical Inline
Catalog: G1000

UNICASE™ Parallel Shaft
Catalog: G1020

UNICASE™ Helical Bevel
Catalog: G1000

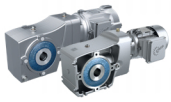
NORDBLOC.1® 2-Stage Helical Bevel
Catalog: G1014

DuoDrive Integrated Gear Motor
Catalog: G5010, Flyer: S5010

UNICASE™ Worm
Catalog: G1000

FLEXBLOC® SI Worm
Catalog: G1035, Flyer: F1033

MINICASE™ SMI Worm
Catalog: G1035, Flyer: F1033

Systems

LogiDrive Complete Drive Solution
Flyer: S5200

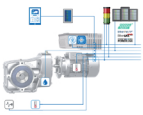
Condition Monitoring for
Predictive Maintenance
Flyer: S9091

nsd tupH™ Sealed Surface Conversion
Flyer: S4500

Screw Conveyor Package (SCP)
Catalog: G1129, Flyer: F1129

Overhead Conveyor Drives
Catalog: G1043

Motors & Brakemotors

VFD/AC Vector Duty Motors
Catalog: M7000

IE4/IE5+ Premium Efficiency Motors
Catalog: M5000, Flyer: S9012

Smooth Body Motors
Catalog: M7010

Variable Frequency Drives

NORDAC® *START* Motor Starters
Catalog: E3000, Flyer: F3015

NORDAC® *BASE* VFDs
Catalog: E3000, Flyer: F3018

NORDAC® *FLEX* VFDs
Catalog: E3000, Flyer: F3020

NORDAC® *LINK* VFDs & Motor Starters
Catalog: E3000, Flyer: F3025

NORDAC® *PRO* VFDs
Catalog: E3000, Flyer: F3060

NORDAC® *ON/ON+* VFDs
Catalog: E3000, Flyer: S9013

Industrial Gear Units

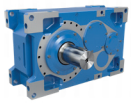
MAXXDRIVE® Industrial Gear Units
(Parallel, Right Angle)
Catalog: G1050, Flyer: F1050

MAXXDRIVE® XT Industrial Gear Units
(Parallel with High Thermal Limit)
Catalog: TI60-0011, Flyer: S1055

MAXXDRIVE® XD Industrial Gear Units
(Extended Center Distance)
Flyer: S1056

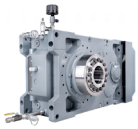
Endurance Package
Application Sheet: 106066000

Send Quote Requests to info@automatedpt.com
Call +1(800)985-6929 To Order or Order Online At Nordgearmotors.com

Ordering is Easy With myNORD Online Tools!

- Obtain drawing files direct from quote configuration
- Effortlessly select & configure customized drive solutions
- Create quotes with account-specific net pricing
- Order-specific documentation
- 24/7/365 order tracking
- Select and order spare parts

Register now at myNORD.com!

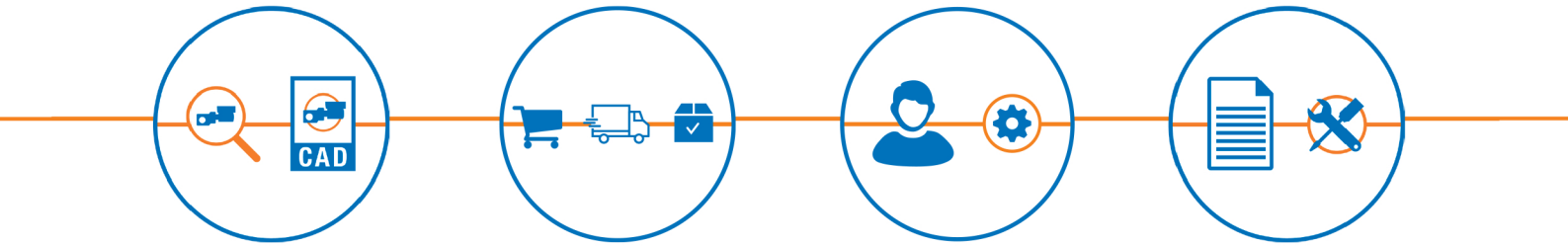

US

Central Region
Corporate Headquarters
800 NORD Drive
Waunakee, WI 53597
Tel. 888.314.6673
info.us@nord.com
www.nord.com

East Region
300E Forsyth Hall Dr.
Charlotte, NC 28273
Tel. 888.314.6673
info.us@nord.com

West Region
1180 Railroad St.
Corona, CA 92882
Tel. 888.314.6673
info.us@nord.com

South Region
350 Cypress Hill Dr, Suite 400
McKinney, TX 75071
Tel. 888.314.6673
info.us@nord.com

CA

NORD Gear Limited
Brampton, ON
41 West Drive
Brampton, ON L6T4A1
Tel. 800.668.4378
info.ca@nord.com

MX

NORD DRIVE SYSTEMS SA DE CV
Queretaro, Mexico
Av. Industria Textil B.6
Parque Industrial PYME, Huimilpan
QRO - Mexico 76950
Tel. 52 442 688 7110
info.mx@nord.com

Members of the NORD DRIVESYSTEMS Group

US– M7000 Part No. 6000603 / 4022

Send Quote Requests to info@automatedpt.com
Call +1(800)985-6929 To Order or Order Online At Nordgearmotors.com