Send Quote Requests to info@automatedpt.com
Call +1(800)985-6929 To Order or Order Online At Nordgearmotors.com

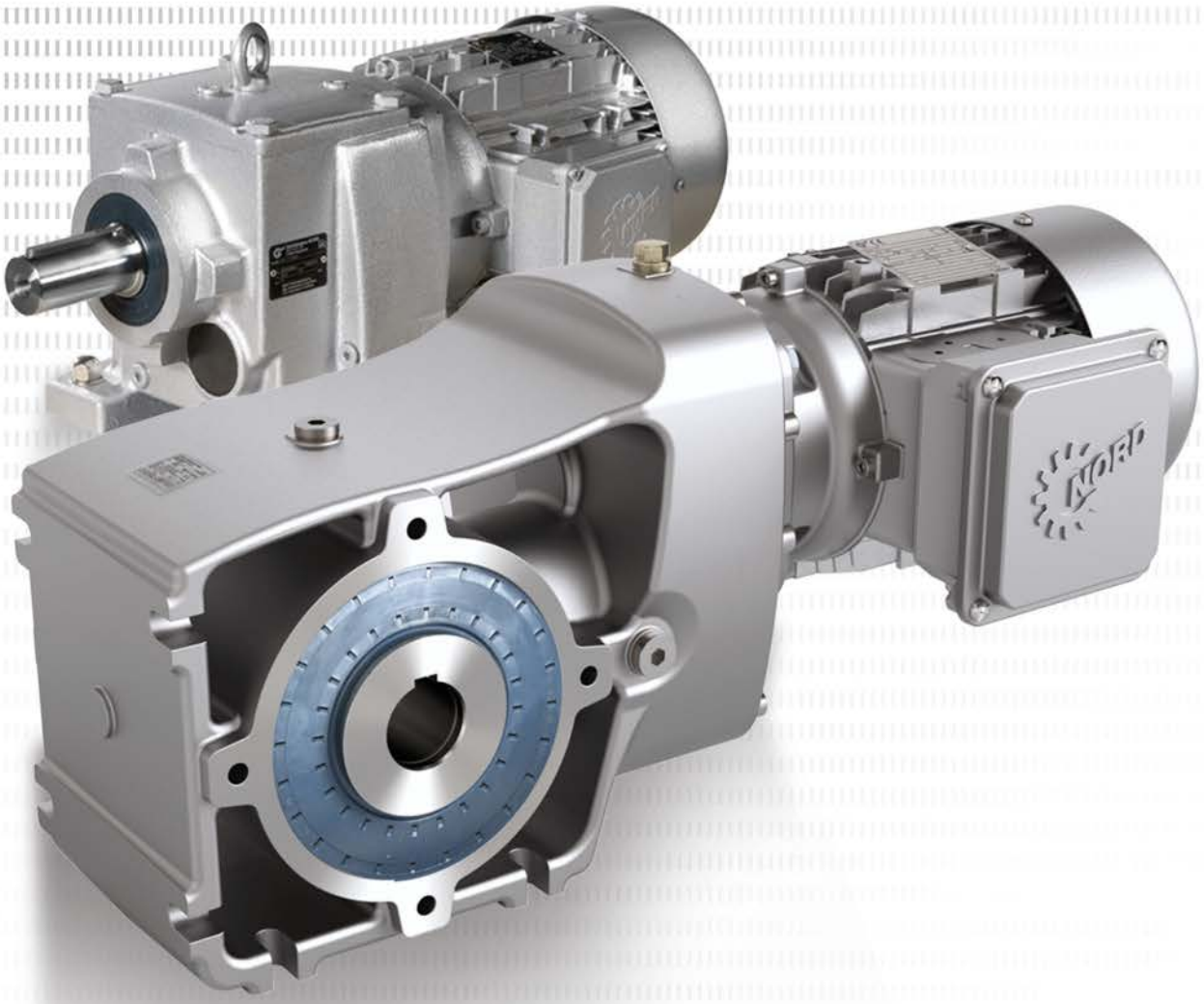

B 1000 – en

Gear units

Manual with installation instructions

Send Quote Requests to info@automatedpt.com
Call +1(800)985-6929 To Order or Order Online At Nordgearmotors.com

Send Quote Requests to info@automatedpt.com Call +1(800)985-6929 To Order or Order Online At Nordgearmotors.com

Read document and keep for future reference

Read this document carefully prior to performing any work on or putting the device into operation. It is essential to read and observe the instructions in this document. They serve as the prerequisite for smooth and safe operation and the fulfilment of any warranty claims.

Contact Getriebebau NORD GmbH & Co. KG if your questions regarding the handling of the device are not answered in this document or if you require further information.

The German version of this document is the original. The German document is always decisive. If this document is available in other languages, this will be a translation of the original document.

Keep this document in the vicinity of the device so that it is available if required.

Use the version of this documentation that is valid for your device at the time of delivery. You can find the currently valid version of the documentation under www.nord.com.

Please also note the following documents:

- Gear unit catalogues,
- Documentation for the electric motor,
- Documentation for equipment which is attached or provided.

Send Quote Requests to info@automatedpt.com
Call +1(800)985-6929 To Order or Order Online At Nordgearmotors.com

Send Quote Requests to info@automatedpt.com Call +1(800)985-6929 To Order or Order Online At Nordgearmotors.com

Documentation

Designation:	**B 1000**
Part no.:	**6052802**
Series:	Gear units and geared motors
Type series:	
Gear unit types:	**Helical gear units** **NORDBLOC.1® helical in-line gear units** **Standard helical gear units** **Parallel shaft gear units** **Bevel gear units** **Helical worm gear units** **MINIBLOC worm gear units** **UNIVERSAL worm gear units**

Send Quote Requests to info@automatedpt.com
Call +1(800)985-6929 To Order or Order Online At Nordgearmotors.com

Send Quote Requests to info@automatedpt.com Call +1(800)985-6929 To Order or Order Online At Nordgearmotors.com

Version list

Title, Date	Order number / Version Internal code	Remarks
B 1000, February 2013	**6052802** / 0713	-
B 1000, September 2014	**6052802** / 3814	• General corrections
B 1000, April 2015	**6052802** / 1915	• New gear unit types SK 10382.1 + SK 11382.1
B 1000, March 2016	**6052802** / 0916	• General corrections • New bevel gear units SK 920072.1 + SK 930072.1
B 1000, September 2016	**6052802** / 3816	• General corrections • New helical gear units SK 071.1, SK 171.1, SK 371.1, SK 571.1, SK 771.1;
B 1000, June 2018	**6052802** / 2518	• General corrections • New parallel shaft gear units SK 0182.1, SK 0282.1, SK 1282.1, SK 1382,1 • New worm gear unit SK 02040.1
B 1000, December 2018	**6052802** / 5018	• General corrections • Revision of safety and warning information • New NORDBLOC.1® helical in-line gear units SK 871.1, SK 971.1, SK 1071.1
B 1000, October 2019	**6052802** / 4419	• General corrections • Addition of GRIPMAXX™ (Option M)
B 1000, September 2021	**6052802** / 3921 32551	• Editorial revision • General corrections and amendments
B 1000, July 2022	**6052802** / 2822 34343	• Revision of the maximum motor weights
B 1000, July 2023	**6052802** / 3023 36228	• General corrections • Revision of safety information • Enhancement of types in table “Maximum permitted motor weights”: SK 9xxx.1 and SK 1382.1 • Revision of lubricants • Adjustment of long-term storage

Table 1: Version list B 1000

Send Quote Requests to info@automatedpt.com
Call +1(800)985-6929 To Order or Order Online At Nordgearmotors.com

Send Quote Requests to info@automatedpt.com Call +1(800)985-6929 To Order or Order Online At Nordgearmotors.com

Copyright notice

As an integral component of the device described here, this document must be provided to all users in a suitable form.
Any editing or amendment or other utilisation of the document is prohibited.

Publisher

Getriebebau NORD GmbH & Co. KG
Getriebebau-Nord-Straße 1 • 22941 Bargteheide, Germany • http://www.nord.com
Fon +49 (0) 45 32 / 289-0 • Fax +49 (0) 45 32 / 289-2253

Member of the NORD DRIVESYSTEMS Group

Send Quote Requests to info@automatedpt.com
Call +1(800)985-6929 To Order or Order Online At Nordgearmotors.com

Send Quote Requests to info@automatedpt.com Call +1(800)985-6929 To Order or Order Online At Nordgearmotors.com

Send Quote Requests to info@automatedpt.com
Call +1(800)985-6929 To Order or Order Online At Nordgearmotors.com

Send Quote Requests to info@automatedpt.com Call +1(800)985-6929 To Order or Order Online At Nordgearmotors.com

Table of Contents

1 Safety information 11
- 1.1 Intended use 11
- 1.2 Do not make any modifications. 11
- 1.3 Performing inspection and maintenance work 11
- 1.4 Personnel qualification 11
- 1.5 Safety for particular activities 12
  - 1.5.1 Check for transport damage 12
  - 1.5.2 Safety information for installation and maintenance 12
- 1.6 Hazards 12
  - 1.6.1 Hazards when lifting 12
  - 1.6.2 Hazards due to rotating parts 12
  - 1.6.3 Hazards due to high or low temperatures 13
  - 1.6.4 Hazards due to lubricants and other substances 13
  - 1.6.5 Hazards due to noise 13
  - 1.6.6 Hazards due to pressurised coolants 13

2 Description of gear units 14
- 2.1 Gear unit types and type designations 14
- 2.2 Name plate 16

3 Transport, storage, assembly 17
- 3.1 Transporting the gear unit 17
- 3.2 Storage and downtimes 17
  - 3.2.1 General measures 17
  - 3.2.2 Storage and downtimes in excess of 3 months 18
  - 3.2.3 Storage and downtimes of more than 9 months 18
- 3.3 Preparing for installation 19
  - 3.3.1 Check for damages 19
  - 3.3.2 Remove corrosion protection agents 19
  - 3.3.3 Check rotational direction 19
  - 3.3.4 Check ambient conditions 19
  - 3.3.5 Drives with nsd tupH surface treatment 19
  - 3.3.6 Installing the oil expansion chamber (Option: OA) 20
  - 3.3.7 Installing the oil reservoir tank (Option: OT) 20
- 3.4 Installing the gear unit 20
- 3.5 Installation of a hub on solid shaft (option: V, L) 21
- 3.6 Fitting push-on gear units with fastening element (option: B) 23
- 3.7 Fitting a hollow shaft with shrink disc (Option: S) 26
- 3.8 Fitting a hollow shaft with GRIPMAXX™ (Option: M) 28
- 3.9 Fitting the covers (option: H, H66) 30
- 3.10 Fitting the covers 31
- 3.11 Fitting a standard motor (Option: IEC, NEMA, AI, AN) 32
- 3.12 Mounting of the cooling coil onto the cooling system 36
- 3.13 Installation of the external oil/air cooler 36
  - 3.13.1 Connecting hose lines 37
  - 3.13.2 Electrical connection 37
- 3.14 Installation of an oil expansion chamber (Option: OA) 38
  - 3.14.1 Installation of the sizes I, II and III 38
  - 3.14.2 Installation of sizes 0A and 0B 39
- 3.15 Subsequent painting 39
- 3.16 Electrical connection of the mounted motor 39

4 Commissioning 40
- 4.1 Checking the oil level 40
- 4.2 Activating the vent 40
- 4.3 Activating the automatic lubricant dispenser 41
- 4.4 Cooling coil (Option: CC) 43
- 4.5 External oil/air cooler 44
- 4.6 Running-in time for the worm gear unit 44

Send Quote Requests to info@automatedpt.com
Call +1(800)985-6929 To Order or Order Online At Nordgearmotors.com

Send Quote Requests to info@automatedpt.com Call +1(800)985-6929 To Order or Order Online At Nordgearmotors.com

4.7 AI/AN adapter operation with option BRG1 45
4.8 Checklist 45

5 Service and maintenance 46
5.1 Inspection and maintenance intervals 46
5.2 Service and maintenance work 47
5.2.1 Visual inspection for leaks 47
5.2.2 Check for running noises 47
5.2.3 Checking the oil level 48
5.2.4 Visual inspection of the rubber buffers (Option: G, VG) 49
5.2.5 Visual inspection of the hoses (Option: OT, CS2-X) 49
5.2.6 Re-greasing (Option: VL2, VL3, W, AI, AN) 49
5.2.7 Replacing the automatic lubricant dispenser 50
5.2.8 Change the oil 51
5.2.9 Clean and check vent screw 51
5.2.10 Replacing the shaft sealing ring 51
5.2.11 Re-lubrication of bearings in the gear unit 52
5.2.12 General overhaul 52

6 Disposal 53

7 Appendix 54
7.1 Versions and mounting position 54
7.1.1 Explanation of symbols 54
7.1.2 UNIVERSAL/MINIBLOC worm gear units 55
7.1.3 Parallel shaft gear units with oil level tank 56
7.1.4 Overview of mounting positions 57
7.2 Lubricants 70
7.2.1 Roller bearing greases 70
7.2.2 Gear oils 71
7.3 Screw tightening torques 72
7.4 Troubleshooting 73
7.5 Leakage and leak-tightness 74
7.6 Repair information 75
7.6.1 Repairs 75
7.6.2 Internet information 75
7.7 Warranty 75
7.8 Abbreviations 76

Send Quote Requests to info@automatedpt.com
Call +1(800)985-6929 To Order or Order Online At Nordgearmotors.com

Send Quote Requests to info@automatedpt.com Call +1(800)985-6929 To Order or Order Online At Nordgearmotors.com

List of illustrations

Figure 1: Name plate ... 16
Figure 2: Example of a simple pulling device ... 21
Figure 3: Permissible application of force to drive and driven shafts ... 22
Figure 4: Applying lubricant to the shaft and the hub ... 23
Figure 5: Removing the factory-fitted closing cap ... 24
Figure 6: Gear unit mounted on shaft with a shoulder using the fastening element ... 24
Figure 7: Gear unit mounted on shaft without a shoulder using the fastening element ... 24
Figure 8: Removal using dismantling device ... 24
Figure 9: Mounting the rubber buffer (Option G and/or VG) on parallel shaft gear units ... 25
Figure 10: Attaching the torque support on bevel gear and worm gear units ... 25
Figure 11: Hollow shaft with shrink disc ... 26
Figure 12: GRIPMAXX™, exploded diagram ... 28
Figure 13: Fitting the covers, Option SH, Option H, and Option H66 ... 30
Figure 14: Disassembly and assembly of the cover cap ... 31
Figure 15: Fitting the coupling onto the motor shaft - various types of coupling ... 34
Figure 16: Cooling cover ... 36
Figure 17: Connection of the oil/air cooler ... 37
Figure 18: Position of the oil expansion chamber ... 38
Figure 19: Position of the oil expansion chamber ... 39
Figure 20: Activating the vent screw ... 40
Figure 21: Activating the pressure vent screw ... 40
Figure 22: Removing the vent plug and fitting the special pressure vent ... 40
Figure 23: Fitting the grease collection container ... 41
Figure 24: Activating the automatic lubricant sensor with standard motor mounting ... 42
Figure 25: Adhesive label ... 42
Figure 26: Checking the oil level with a dipstick ... 48
Figure 27: Re-grease IEC/NEMA adapters AI and AN with option BRG1 ... 49
Figure 28: Switching the automatic lubricant sensor with standard motor mounting ... 50
Figure 29: Parallel shaft gear units with oil level tank ... 56

Send Quote Requests to info@automatedpt.com
Call +1(800)985-6929 To Order or Order Online At Nordgearmotors.com

Send Quote Requests to info@automatedpt.com Call +1(800)985-6929 To Order or Order Online At Nordgearmotors.com

List of tables

Table 1: Version list B 1000 4
Table 2: Gear unit types and type designations 14
Table 3: Versions and options 15
Table 4: Permissible machine shaft tolerances 29
Table 5: Motor weights IEC motors 32
Table 6: Motor weights NEMA motors 33
Table7: Motor parallel keys 35
Table 8: Position of the half-coupling on the NEMA motor shaft 35
Table 9: Checklist for commissioning 45
Table 10: Inspection and maintenance intervals 46
Table 11: Materials 53
Table 12: Roller bearing greases 70
Table 13: Gear oils 71
Table 14: Screw tightening torques 72
Table 15: Overview of malfunctions 73
Table 16: Definition of leakage according to DIN 3761 74

Send Quote Requests to info@automatedpt.com
Call +1(800)985-6929 To Order or Order Online At Nordgearmotors.com

Send Quote Requests to info@automatedpt.com Call +1(800)985-6929 To Order or Order Online At Nordgearmotors.com

1 Safety information

1.1 Intended use

These gear units are used to transmit rotary movements. They convert velocity and torque. They are intended for use as part of a drive system in commercially used plant and machinery. The gear units must not be operated until it has been established that the plant or machinery can be safely operated with the gear unit. Suitable protective measures must be provided if failure of a gear unit or a geared motor could result in a risk to persons. The plant or machinery must comply with local legislation and directives. All applicable health and safety requirements must be met. In particular, the Machinery Directive 2006/42/EC and UKCA "Supply of Machinery (Safety) Regulations 2008" must be especially observed in the relevant areas of application.

The gear units and geared motors to which this manual with installation instructions refers to are usually components for installation in machines according to the current EC Machinery Directive 2006/42/EG.

In certain individual cases in which the gear unit or the geared motor is considered as a ready-to-install drive system for specific applications, this drive system is classified as a incomplete machine according to the current EC Machinery Directive 2006/42/EG. A corresponding declaration of incorporation is enclosed with the product.

The gear units may not be used in environments in which an explosive atmosphere can occur.

The gear units may only be used according to the information in the technical documentation from Getriebebau NORD GmbH & Co. KG. Damage to the gear unit may result if the gear unit is not used as intended and according to the information in the operating and installation manual. This may also result in personal injury.

The base or the gear unit mount must be appropriately dimensioned for the weight and torque. All of the fastenings provided must be used.

Some gear units are equipped with a cooling coil/cooling system. These gear units may only be operated if the cooling circuit is connected and in operation.

1.2 Do not make any modifications.

Do not make any structural modifications to the gear unit. Do not remove any protective guards. Do not change the original coating / paint or apply additional coatings / paints.

1.3 Performing inspection and maintenance work

Due to lack of maintenance and damage, malfunctions may occur which can result in personal injury.

- Carry out all servicing and maintenance work at the specified intervals.
- Also note that servicing is necessary after long storage periods prior to commissioning.
- Do not operate damaged gear units. The gear unit must not have any leaks.

1.4 Personnel qualification

All transport, storage, installation, commissioning and maintenance work must be carried out by qualified specialist personnel.

Qualified specialist personnel are persons who have the training and experience to recognise and avoid any possible risks.

Send Quote Requests to info@automatedpt.com
Call +1(800)985-6929 To Order or Order Online At Nordgearmotors.com

Send Quote Requests to info@automatedpt.com Call +1(800)985-6929 To Order or Order Online At Nordgearmotors.com

1.5 Safety for particular activities

1.5.1 Check for transport damage

Transport damage may cause malfunctions of the gear unit, which may cause personal injury. Oil which escapes due to leaks may cause a slipping hazard.

- Check the packaging and the gear unit for transport damage.
- Do not operate damaged gear units.

1.5.2 Safety information for installation and maintenance

Before starting work on the gear unit disconnect the drive from the power supply and secure it against accidental switch-on. Allow the gear unit to cool down. Depressurise the cooling circuit lines.

Damaged or defective components, attachment adapters, flanges and covers may have sharp edges. Wear work gloves and work clothing.

1.6 Hazards

1.6.1 Hazards when lifting

Persons may be injured by falling or swinging gear units. Therefore also observe the following information:

- Cordon off a wide area around the hazard area. Take care that there is adequate space to avoid swinging loads.
- Never stand under suspended loads.
- Use adequately dimensioned means of transport which are suitable for the purpose. The weight of the gear unit can be obtained from the type plate.
- Only lift the gear unit by the factory-mounted eyebolts.

  If there are no eyebolts available, screw one eyebolt according to DIN 580 into each provided threaded hole. The eyebolts must be fully screwed in.
  Tighten the eyebolts only according to Chapter 3.1 "Transporting the gear unit". Only use the eyebolts to lift the gear unit without other components. The eye bolts are not designed for lifting the gear unit with attachments. Use the eyebolts on both the gear unit and the motor to lift a geared motor (observe the manufacturer's instructions for the motor).

1.6.2 Hazards due to rotating parts

Rotating parts cause a risk of entanglement. This may lead to severe injuries such as crushing or strangling.

- Provide contact protection. In addition to shafts, this also applies to fans as well as drives and driven elements such as belt drives, chain drives, shrink discs and couplings. Take possible run-on of the machine into consideration for the design of protective devices.
- Do not operate the drive without covers or hoods.
- Secure the drive to prevent activation during installation and maintenance work.
- For test operation do not switch on the drive without an installed driven element or secure the motor shaft key.
- Also observe the safety information in the operating and installation instructions provided by manufacturers of components supplied.

Send Quote Requests to info@automatedpt.com
Call +1(800)985-6929 To Order or Order Online At Nordgearmotors.com

Send Quote Requests to info@automatedpt.com Call +1(800)985-6929 To Order or Order Online At Nordgearmotors.com

1.6.3 Hazards due to high or low temperatures

The gear unit may heat up to 90 °C during operation. Touching hot surfaces or contact with hot oil may result in burns. At very low ambient temperatures freezing may occur on contact.

- Only touch the gear unit when wearing gloves after operation or at very low ambient temperatures.
- Before starting maintenance work, allow the gear unit to cool down sufficiently after operation.
- Provide a contact guard if there is a risk that persons may touch the gear unit when it is in operation.
- Bursts of hot oil mist may be emitted from the pressure vent screw during operation. Provide a suitable guard so that persons cannot be injured by this.
- Do not place any flammable materials on the gear unit.

1.6.4 Hazards due to lubricants and other substances

Chemical substances which are used with the gear unit may be toxic. Eye injuries may result if these substances enter the eyes. Lubricants and adhesives may cause skin irritation.

Oil mist may escape when vent screws are opened.

Due to lubricants and conservation materials, gear units may be slippery and slip out of the hands. There is a slipping hazard from spilled lubricants.

- When working with chemical substances wear chemical-resistant gloves and work clothing. Wash your hands after working.
- Wear protective goggles if there is a possibility of splashed chemicals, for example when filling oil or during cleaning work.
- If chemicals enter the eyes, rinse with large amounts of cold water immediately. Consult a physician in case of symptoms.
- Observe the safety data sheets for the chemicals. Keep the safety data sheets in the vicinity of the gear unit.
- Collect spilled lubricants immediately with a binding agent.

1.6.5 Hazards due to noise

Some gear units or attached components may cause hazardous noise levels during operation. Wear hearing protection if work has to be carried out close to such gear units.

1.6.6 Hazards due to pressurised coolants

The cooling system is under high pressure. Damage or opening a cooling line which is under pressure may result in injury. Depressurise the cooling circuit before working on the gear unit.

Send Quote Requests to info@automatedpt.com
Call +1(800)985-6929 To Order or Order Online At Nordgearmotors.com

Send Quote Requests to info@automatedpt.com Call +1(800)985-6929 To Order or Order Online At Nordgearmotors.com

2 Description of gear units

2.1 Gear unit types and type designations

Gear unit types/ Type designations
UNICASE helical gear units **2-stage:** SK 02, SK 12, SK 22 SK 32, SK 42, SK 52, SK 62N, SK 62, SK 72, SK 82, SK 92, SK 102 **3-stage:** SK 03, SK 13, SK 23, SK 33N, SK 43, SK 53, SK 63, SK 73, SK 83, SK 93, SK 103
NORDBLOC.1® helical gear unit **1-stage:** SK 071.1, SK 171.1, SK 371.1, SK 571.1, SK 771.1, SK 871.1, SK 971.1, SK 1071.1 **2-stage:** SK 072.1, SK 172.1, SK 372.1, SK 572.1, SK 672.1, SK 772.1, SK 872.1, SK 972.1 **3-stage:** SK 373.1, SK 573.1, SK 673.1, SK 773.1, SK 873.1, SK 973.1
STANDARD helical gear units **2-stage:** SK 0, SK 01, SK 20, SK 25, SK 30, SK 33 **3-stage:** SK 010, SK 200, SK 250, SK 300, SK 330
UNICASE parallel gear units **2-stage:** SK 0182NB, SK 0182.1, SK 0282NB, SK 0282.1, SK 1282, SK 1282.1, SK 2282, SK 3282, SK 4282, SK 5282, SK 6282, SK 7282, SK 8282, SK 9282 **3-stage:** SK 2382, SK 3382, SK 4382, SK 5382, SK 6382, SK 7382, SK 8382, SK 9382, SK 10382, SK 10382.1, SK 11382
UNICASE bevel gear units **3-stage:** SK 9012.1, SK 9016.1, SK 9022.1, SK 9032.1, SK 9042.1, SK 9052.1, SK 9062.1, SK 9072.1, SK 9082.1, SK 9086.1, SK 9092.1, SK 9096.1 **4-stage:** SK 9013.1, SK 9017.1, SK 9023.1, SK 9033.1, SK 9043.1, SK 9053.1
NORDBLOC.1® bevel gear unit **2-stage:** SK 920072.1, SK 92072.1, SK 92172.1, SK 92372.1, SK 92672.1, SK 92772.1, SK 930072.1, SK 93072.1, SK 93172.1, SK 93372.1, SK 93672.1, SK 93772.1
UNICASE worm gear units **2-stage:** SK 02040, SK 02040.1, SK 02050, SK 12063, SK 12080, SK 32100, SK 42125 **3-stage:** SK 13050, SK 13063, SK 13080, SK 33100, SK 43125
UNIVERSAL SI worm gear units **1-stage:** SK 1SI31, SK 1SID31, SK 1SI40, SK 1SID40, SK 1SI50, SK 1SID50, SK 1SI63, SK 1SID63, SK 1SI75 **2-stage (Helical worm gear unit):** SK 2SID40, SK 2SID50, SK 2SID63
UNIVERSAL SMI worm gear units **1-stage:** SK 1SMI31, SK 1SMID31, SK 1SMI40, SK 1SMID40, SK 1SMI50, SK 1SMID50, SK 1SMI63, SK 1SMID63, SK 1SMI75 **2-stage (Helical worm gear unit):** SK 2SMID40, SK 2SMID50, SK 2SMID63

Table 2: Gear unit types and type designations

Double gear units consist of two single gear units. The type designation of the SK 73/22 double gear unit, for example, means that the double gear unit consists of the single gear units SK 73 and SK 22.

Send Quote Requests to info@automatedpt.com
Call +1(800)985-6929 To Order or Order Online At Nordgearmotors.com

Send Quote Requests to info@automatedpt.com Call +1(800)985-6929 To Order or Order Online At Nordgearmotors.com

Abbreviation	Description
(without)	Foot mounting with solid shaft
/31	Worm gear first stage
/40	Worm gear first stage
5	Reinforced output shaft
A	Hollow shaft
AI	Standard IEC motor attachment
AI…BRG1	Standard IEC motor attachment with manual re-lubrication
AI…RLS	Standard IEC motor attachment with integrated back stop
AL	Reinforced axial bearing
AN	Standard NEMA motor attachment
AN…BRG1	Standard NEMA motor attachment with manual re-lubrication
AN…RLS	Standard NEMA motor attachment with integrated back stop
B	Fastening element
CC	Cooling coil
D	Torque arm
DR	Pressure vent
EA	Splined hollow shaft
F	B5 flange
G	Rubber buffer for torque arm
H	Cover cap
/H10	Modular helical pre-stage for universal worm gear units
H66	IP66 cover
IEC	Standard IEC motor attachment
K	Torque bracket
L	Solid shaft both sides
M	GRIPMAXX™
MK	Motor bracket
NEMA	Standard NEMA motor attachment
OA	Oil expansion chamber
OT	Oil level tank
R	Back stop
S	Shrink disc
SCP	Screw conveyor flange
SO1	Synthetic oil ISO VG 220
V	Solid shaft (for standard helical gear units: reinforced drive)
VG	Reinforced rubber buffer
VI	Viton radial shaft seals
VL	Reinforced output bearings
VL2	Agitator version - Reinforced bearings
VL3	Agitator version - Reinforced bearings - Drywell
VS	Reinforced shrink disc
W	Free drive shaft
X	Housing foot mounting
Z	B14 flange

Table 3: Versions and options

Send Quote Requests to info@automatedpt.com
Call +1(800)985-6929 To Order or Order Online At Nordgearmotors.com

Send Quote Requests to info@automatedpt.com Call +1(800)985-6929 To Order or Order Online At Nordgearmotors.com

2.2 Name plate

The name plate must be firmly attached to the gear unit and must not be subjected to permanent soiling. Please contact the NORD service department if the name plate is illegible or damaged.

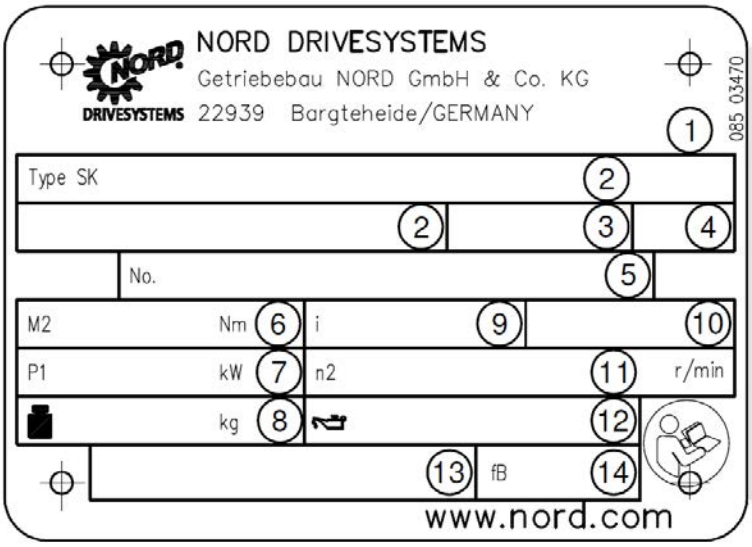

Figure 1: Name plate

Explanation

1	DataMatrix code	8	Weight
2	NORD gear unit type	9	Overall gear unit ratio
3	Operating mode	10	Installation position
4	Year of manufacture	11	Rated speed of gear unit output shaft
5	Serial number	12	Lubricant type, viscosity and quantity
6	Rated torque of gear unit output shaft	13	Customer part number
7	Drive power	14	Operating factor

Send Quote Requests to info@automatedpt.com
Call +1(800)985-6929 To Order or Order Online At Nordgearmotors.com

Send Quote Requests to info@automatedpt.com Call +1(800)985-6929 To Order or Order Online At Nordgearmotors.com

3 Transport, storage, assembly

3.1 Transporting the gear unit

WARNING

Hazard due to falling loads

- The thread of the eyebolt must be fully screwed in.
- As shown in the illustration to the right, only lift on the eyebolts vertically to the female thread and not more oblique than 45° to the vertical.
- Note the centre of gravity of the gear unit.

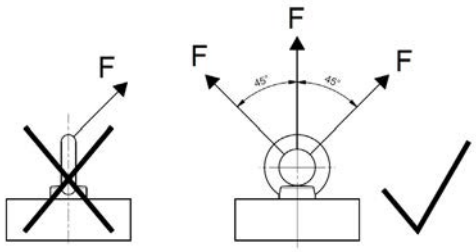

Only use the eyebolts attached to the gear unit for transport. If geared motors have an additional eyebolt attached to the motor, this must also be used.

Transport the gear unit with care. Impacts to the free ends of shafts may cause internal damage to the gear unit.

No additional loads must be attached to the gear unit.

Use suitable aids such as cross-beams or similar to facilitate the attachment or transportation of the gear unit. Gear units without eyebolts may only be transported with shackles and lifting straps or chains at an angle of 90° to 70° to the horizontal.

3.2 Storage and downtimes

3.2.1 General measures

- Store the gear unit in a dry space, relative humidity less than 60%.
- Store the gear unit at a temperature in the range of – 5 °C to + 50 °C without severe temperature fluctuations.
- Do not expose the gear unit to direct sunlight or UV light.
- There must be no aggressive or corrosive substances (contaminated air, ozone, gases, solvents, acids, alkalis, salts, radioactivity etc.) in the immediate vicinity.
- The gear unit must not be exposed to vibration or oscillation.
- Store the gear unit in the mounting position (see chapter 7.1 "Versions and mounting position"). Secure it against falling.

Send Quote Requests to info@automatedpt.com
Call +1(800)985-6929 To Order or Order Online At Nordgearmotors.com

Send Quote Requests to info@automatedpt.com Call +1(800)985-6929 To Order or Order Online At Nordgearmotors.com

3.2.2 Storage and downtimes in excess of 3 months

Note the following measures in addition to Section 3.2.1 "General measures".

- Repair damages to the coating. Check if a corrosion protection agent has been applied to the flange bearing surfaces, the shaft ends and the unpainted surfaces. If required, apply a suitable corrosion protection agent to the surfaces.
- Seal all openings on the gear unit.
- The output shaft must be rotated by at least one revolution every 3 months so that the contact position of the gear teeth and the roller bearings are changed.

3.2.3 Storage and downtimes of more than 9 months

Under certain conditions, storage of 2 to 3 years is possible. The specified storage duration is only approximate. The actual storage duration depends on the local conditions. Note the following measures in addition to Sections 3.2.1 "General measures"and 3.2.2 "Storage and downtimes in excess of 3 months".

Gear units can be supplied prepared for long-term storage. The gear units are completely filled with lubricant, or a VCI corrosion protection agent is added to the gear oil. The adhesive label on the housing shows the respective information.

Conditions of the gear unit and storage area for long-term storage prior to commissioning:

- Store the gear unit at a temperature in the range of -5 °C to +40 °C without severe temperature fluctuations.
- Check if the sealing cord in the vent screw is in place. It must not be removed during storage.
- Store the gear unit in a dry space. With a relative humidity less than 60%, the gear unit can be stored for up to 2 years; with a relative humidity less than 50%, storage of up to 3 years is possible.
- In tropical regions, protect the gear unit against damage by insects.
- Gear unit components such as motors, brakes, couplings, belt drive, and cooling units must be protected for a long-term storage in accordance to their operating instructions.

In addition to the preparations listed in 4 "Commissioning", the following measures are necessary before commissioning:

- Check the gear unit for external damage.
- After storage of more than 2 years, or with storage temperatures outside the permissible range from -5 °C to +40 °C, change the lubricant in the gear unit before commissioning.
- If the gear unit is completely filled, the oil level must be reduced according to the mounting position. For the lubricant quantity and lubricant type, refer to the information on the name plate.
- For the option with manual re-lubrication, change the bearing grease after a storage period of more than two years. The service life of the grease is reduced after a storage time or gear unit shutdown of more than 9 months (see chapter 5.2.6 "Re-greasing (Option: VL2, VL3, W, AI, AN)").

Send Quote Requests to info@automatedpt.com
Call +1(800)985-6929 To Order or Order Online At Nordgearmotors.com

Send Quote Requests to info@automatedpt.com Call +1(800)985-6929 To Order or Order Online At Nordgearmotors.com

3.3 Preparing for installation

3.3.1 Check for damages

Please examine the delivery for transport and packaging damage immediately on receipt. Pay particular attention to radial shaft seals and sealing caps. Report any damage to the carrier immediately.

Do not put the drive into operation if damage such as leaks are visible.

3.3.2 Remove corrosion protection agents

All bare metal surfaces and shafts of the drive are protected with corrosion protection agents before shipping.

Thoroughly remove corrosion protection agents and any dirt (e.g. colour residues) from all shafts, flange surfaces and gear unit attachment surfaces before assembly.

3.3.3 Check rotational direction

If an incorrect rotational direction may result in damage or potential risk, check for the correct rotational direction of the output shaft during a test run before attaching it to the machine. Ensure the correct rotational direction during operation.

For gear units with an integrated back stop, switching the drive motor to the blocked direction of rotation, may result in damage to the gear unit. Gears with integrated back stops are marked with arrows on the drive/driven sides. The arrows point in the rotation direction of the gear unit. When connecting the motor and during motor control, ensure, e.g. by testing the field of rotation, that the gear unit can only operate in the direction of rotation.

3.3.4 Check ambient conditions

Make sure that no aggressive or corrosive substances which attack metal, lubricants or elastomers are present at the installation site or are subsequently expected during operation. If such substances are to be expected, contact Getriebebau NORD.

The gear unit, especially its radial shaft seals should be protected from exposure to direct sunlight.

The standard permissible ambient temperature range for synthetic gear unit oils (CLP PG … and CLP HC…) is –20 °C to +40 °C. This temperature range can be extended according to the lubricant table (see chapter 7.2.2 "Gear oils"), if all mounted materials of the gear unit and the application-related speed, torques and modes of operation allow this. Note the project planning documents of the order for this. In case of doubt, ask Getriebebau NORD.

For mineral oil (CLP), the permissible ambient temperature range in accordance to the above stated lubricant table is restricted. The lubricant type is indicated on the name plate (see chapter 2.2 "Name plate ").

For installation altitudes above 1000 m above sea level, the permissible speed and torques may be reduced. Note the project planning documents of the order for this. In case of doubt, ask Getriebebau NORD.

3.3.5 Drives with nsd tupH surface treatment

Drives with **nsd tupH** surface treatment must be electrically decoupled from other components by the use of non-conductive intermediate layers in order to prevent galvanic corrosion.

Send Quote Requests to info@automatedpt.com
Call +1(800)985-6929 To Order or Order Online At Nordgearmotors.com

Send Quote Requests to info@automatedpt.com Call +1(800)985-6929 To Order or Order Online At Nordgearmotors.com

3.3.6 Installing the oil expansion chamber (Option: OA)

Mount the oil expansion chamber (Option OA) according to Chapter 3.14 "Installation of an oil expansion chamber (Option: OA)".

3.3.7 Installing the oil reservoir tank (Option: OT)

Mount the oil reservoir tank (Option OT) according to document WN 0-521 30.

A pressure vent is optionally available. If available, screw the M12x1.5 pressure relief vent into the oil reservoir tank.

3.4 Installing the gear unit

NOTICE!

Gear unit damage through overheating

- For geared motors, check that the cooling air from the motor fan can circulate around the gear unit without obstruction.

NOTICE

Damage of bearing and gear wheel

- Do not carry out any welding work on the gear unit.
- Do not use the gear unit as earth connection for welding work.

The following conditions must be met at the installation site in order to prevent overheating during operation:

- There must be adequate space around the gear unit.
- Air must be able to flow freely past all sides of the gear unit.
- For geared motors, the cooling air from the motor fan must be able to circulate around the gear unit without obstruction.
- The gear unit must not be enclosed or encased.
- The gear unit must not be exposed to high energy radiation.
- Do not direct warm exhaust air from other units onto the gear unit.
- The base or flange to which the gear unit is attached must not input any heat into the gear unit during operation.
- Do not allow dust to accumulate in the area of the gear unit

Install the gear unit in the correct mounting position (see chapter 7.1 "Versions and mounting position")**. Oil checking and oil drain screws must be accessible.**

The base or flange to which the gear unit is fitted should be vibration-free, torsionally rigid and flat. The flatness of the bolting surface on the base or flange must comply with DIN ISO 2768-2 tolerance class K.

Precisely align the gear unit with the drive shaft of the machine in order to prevent additional forces from being imposed on the gear unit due to distortion.

Fasten the gear unit to all gear unit feet of one side or to all flange holes. Use bolts with a minimum quality of 8.8. Tighten the bolts with correct torques (see chapter 7.3 "Screw tightening torques").

For foot and flange-mounted gear units (Option XZ or XF), ensure tension-free bolting. The foot mounting is used to fasten the gear unit. It is designed to absorb the reaction forces from the torque, radial and axial forces as well as the weight. B5 or B14 flanges are basically not designed to absorb the reaction forces. In case of doubt, contact Getriebebau NORD for investigation of the particular case.

Earth the gear unit housing. For geared motors, ensure the earthing via the motor connection.

Send Quote Requests to info@automatedpt.com
Call +1(800)985-6929 To Order or Order Online At Nordgearmotors.com

Send Quote Requests to info@automatedpt.com Call +1(800)985-6929 To Order or Order Online At Nordgearmotors.com

3.5 Installation of a hub on solid shaft (option: V, L)

NOTICE

The gear unit may be damaged by axial forces.

Bearings, gearwheels, shafts and housings may be damaged by incorrect fitting.

- Use a suitable pulling device.
- Do not hit the hub with a hammer.

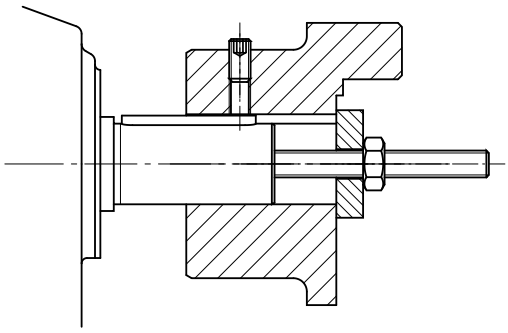

Figure 2: Example of a simple pulling device

During fitting, ensure that the shaft axes are precisely aligned with each other. Comply with the permissible tolerance details provided by the manufacturer.

Information

Use the end thread of the shafts for pulling. Fitting can be facilitated by coating the hub with lubricant or heating it up to approx. 100 °C beforehand.

The maximum radial forces FR1 and FR2 and axial forces FA2 which are imposed on the driving and driven elements of the gear unit must not be exceeded (refer to the name plate). Pay particular attention to the correct tension of belts and chains.

Additional loads due to unbalanced hubs are not permitted.

Send Quote Requests to info@automatedpt.com
Call +1(800)985-6929 To Order or Order Online At Nordgearmotors.com

Send Quote Requests to info@automatedpt.com Call +1(800)985-6929 To Order or Order Online At Nordgearmotors.com

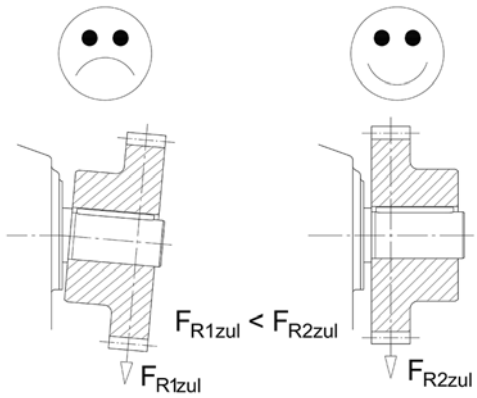

The transverse force must be applied as closely as possible to the gear unit. For drive shafts with free shaft ends (Option W), the maximum permissible transverse force F_{R1} applies for the application of the transverse force to the centre of the free shaft journal. For output shafts, the application of the transverse force F_{R2} must not exceed the dimension x_{R2}. If the radial force F_{R2} is stated on the name plate, but no dimension x_{R2} is stated, application of force is assumed to be to the centre of the shaft journal.

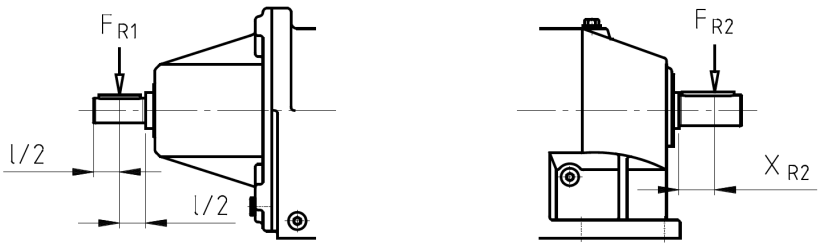

Figure 3: Permissible application of force to drive and driven shafts

Send Quote Requests to info@automatedpt.com
Call +1(800)985-6929 To Order or Order Online At Nordgearmotors.com

Send Quote Requests to info@automatedpt.com Call +1(800)985-6929 To Order or Order Online At Nordgearmotors.com

3.6 Fitting push-on gear units with fastening element (option: B)

WARNING

Risk of severe injuries

If the screw fastenings of the torque arm are removed during operation, the gear unit will rotate around the output shaft.

- Secure the screw fastening against loosening, e.g. with Loctite 242 or a second nut.

NOTICE

The gear unit may be damaged by axial forces.

Bearings, gearwheels, shafts and housings may be damaged by incorrect fitting.

- Use a suitable pulling device.
- Do not strike the gear unit with a hammer.

Assembly and subsequent dismantling is facilitated by applying an anti-corrosive lubricant to the shaft before fitting (e.g. NORD Anti-Corrosion Part No. 089 00099). Excess lubricant may escape after fitting and may drip off. This escape of grease is not due to a leak in the gear unit. Thoroughly clean these points on the output shaft after a running-in time of approx. 24 hours.

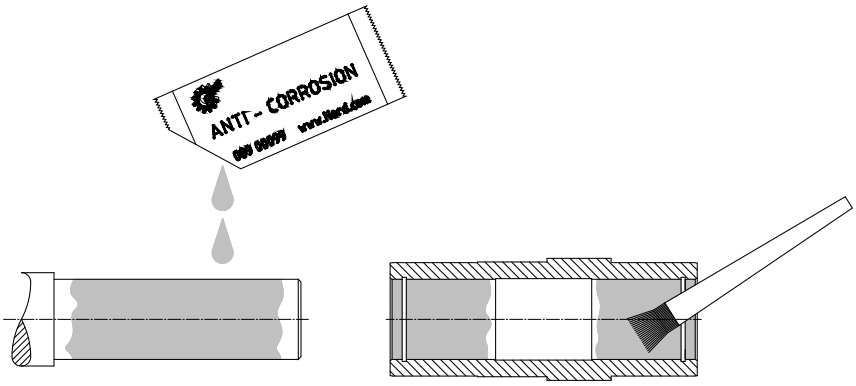

Figure 4: Applying lubricant to the shaft and the hub

For push-on gear units with cover cap IP66 (Option H66) and fastening element (Option B) the pressed-in closing cap must be pushed out before installing the gear unit. The pressed-in closing cap may be destroyed during dismantling. A 2nd closing cap is supplied as a spare part. Fit the closing cap after installation of the gear unit as described in Section 3.9 "Fitting the covers (option: H, H66)".

Send Quote Requests to info@automatedpt.com
Call +1(800)985-6929 To Order or Order Online At Nordgearmotors.com

Send Quote Requests to info@automatedpt.com Call +1(800)985-6929 To Order or Order Online At Nordgearmotors.com

Figure 5: Removing the factory-fitted closing cap

The gear unit can be fitted to solid shafts with and without a shoulder using the fixing element (Option B). Tighten the fastening element bolt with correct torque (see chapter 7.3 "Screw tightening torques").

When fastening without a contact shoulder, a circlip is used in the hollow shaft for axial fastening.

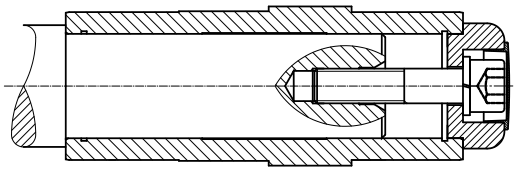

Figure 6: Gear unit mounted on shaft with a shoulder using the fastening element

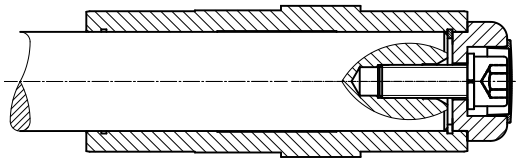

Figure 7: Gear unit mounted on shaft without a shoulder using the fastening element

A gear unit can be removed from a shaft with a shoulder e.g. using the following device.

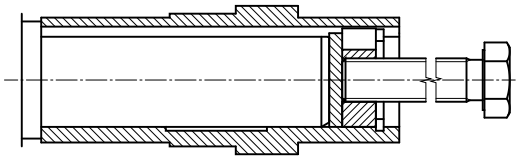

Figure 8: Removal using dismantling device

Send Quote Requests to info@automatedpt.com
Call +1(800)985-6929 To Order or Order Online At Nordgearmotors.com

Send Quote Requests to info@automatedpt.com Call +1(800)985-6929 To Order or Order Online At Nordgearmotors.com

Do not distort the support when installing push-on gear units with a torque support. Tension-free mounting is aided by the rubber buffer (Option G or VG).

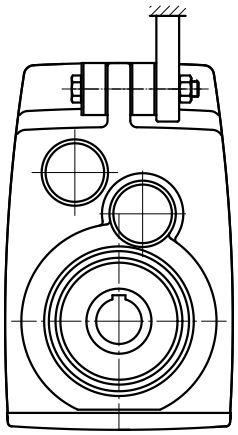

Figure 9: Mounting the rubber buffer (Option G and/or VG) on parallel shaft gear units

To fit the rubber buffer, tighten the screw fastening until there is no play between the contact surfaces when there is no load. For screw fastenings with standard thread, then rotate the fastening nut half a turn in order to pre-tension the rubber buffer. Greater pre-tension is not permissible.

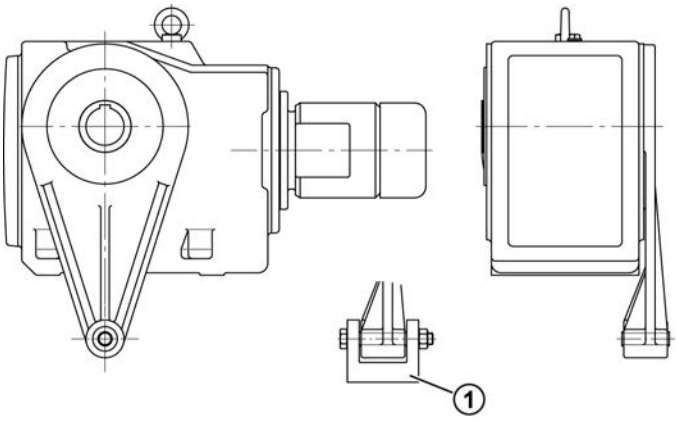

Explanation

1 Always support torque support on both sides

Figure 10: Attaching the torque support on bevel gear and worm gear units

Tighten the fastenings of the torque support with the correct torque (see chapter 7.3 "Screw tightening torques")and secure them against loosening, e.g. with Loctite 242 or Loxeal 54-03.

Send Quote Requests to info@automatedpt.com
Call +1(800)985-6929 To Order or Order Online At Nordgearmotors.com

Send Quote Requests to info@automatedpt.com Call +1(800)985-6929 To Order or Order Online At Nordgearmotors.com

3.7 Fitting a hollow shaft with shrink disc (Option: S)

NOTICE

Risk of damage to the gear unit if the shrink disk is installed incorrectly

- Do not tighten the tensioning bolts if the solid shaft is not installed. This would permanently deform the hollow shaft.

Hollow shafts with shrink discs must be protected from dust, dirt and moisture. NORD recommends option H/H66 (see chapter 3.9 "Fitting the covers (option: H, H66)").

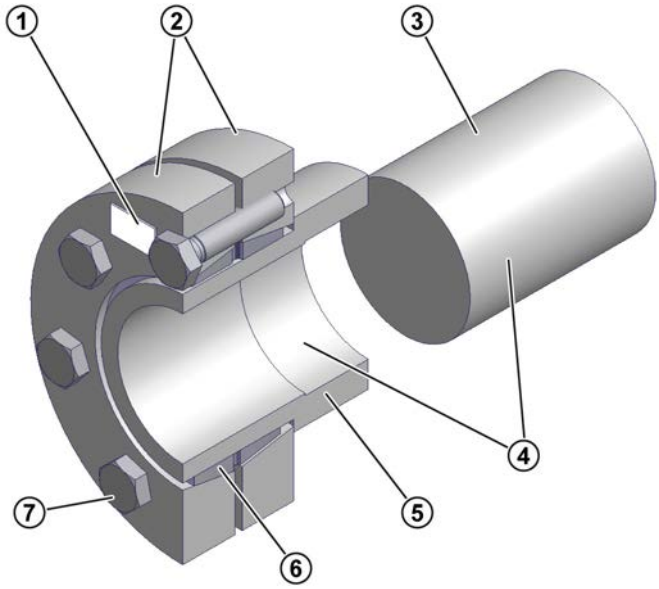

Explanation

1 Shrink disc, type, part no. and torque details for tensioning bolts
2 Tensioning flanges
3 Solid shaft of machine
4 Shaft and hollow shaft bore **FREE OF GREASE**
5 Hollow shaft of gear unit
6 Double half-slotted inner ring
7 Tensioning bolts DIN 931 (933) -10.9

Figure 11: Hollow shaft with shrink disc

The shrink disc is supplied ready for fitting. It must not be dismantled prior to fitting.

The solid shaft material must have a minimum yield strength of 360 N/mm^2. This ensures that no permanent deformation occurs due to the clamping force.

If necessary, also observe the documentation from the manufacturer of the shrink disc.

Prerequisites

- The hollow shaft must be completely free of grease.
- The solid shaft of the machine must be completely free of grease.
- The external diameter of the solid shaft must be within the tolerance h6 or k6 for highly irregular operation, unless otherwise specified in the order-related dimension sheet. The fit must be according to DIN EN ISO 286-2.

Send Quote Requests to info@automatedpt.com
Call +1(800)985-6929 To Order or Order Online At Nordgearmotors.com

Send Quote Requests to info@automatedpt.com Call +1(800)985-6929 To Order or Order Online At Nordgearmotors.com

Fitting procedure

1. Remove the cover, if any.

2. Loosen the tensioning bolts of the shrink disc, but do not unscrew them completely. Tighten the tensioning bolts gently by hand until there is no play between the flanges and the inner ring.

3. Lightly grease the bore of the inner ring. Push the shrink disc onto the hollow shaft until the outer clamping flange is flush with the hollow shaft.

4. Grease the solid shaft of the machine in the area which will later come into contact with the bushing in the hollow shaft. Do not grease the bronze bushing. It is essential that the tensioning seat of the hollow shaft is free of grease.

5. Insert the solid shaft of the machine into the hollow shaft so that the area around the shrink connection is completely filled.

6. Tighten the tensioning bolts of the shrink disc with approx. ¼ rotation of the bolt per turn **in sequence** in a clockwise direction by several turns.

   Use a torque wrench to tighten the tensioning bolts to the tightening torque specified on the shrink disc.

7. Check if there is an even gap between the clamping flanges. If this is not the case, the shrink disc connection must be dismantled and checked for correct fit.

8. Mark the hollow shaft of the gear unit and the solid shaft of the machine with a label in order to detect any slippage under load.

Standard disassembly procedure:

⚠ WARNING

Danger of injury due to sudden mechanical release

The elements of the shrink disc are under great mechanical tension. Sudden release of the outer rings produces high separating forces and can result in uncontrolled detachment of shrink disc components.

- Do not remove any tensioning bolts if you have not ensured that the external outer rings of the shrink disc have been released from the inner ring.

Send Quote Requests to info@automatedpt.com
Call +1(800)985-6929 To Order or Order Online At Nordgearmotors.com

Send Quote Requests to info@automatedpt.com Call +1(800)985-6929 To Order or Order Online At Nordgearmotors.com

1. Loosen the tensioning bolts of the shrink disc with approx. ¼ rotation of the bolt per turn **in sequence** in a clockwise direction by several turns. Do not remove the tensioning bolts from their thread.

2. Loosen the clamping flanges from the cone of the inner ring.

3. Remove the gear unit from the solid shaft of the machine.

If a shrink disc has been in use for a long period or is dirty, dismantle it and clean it before refitting. Check the shrink disc for damage or corrosion. Replace the damaged elements if they are not in perfect condition.

Coat the conical surfaces with MOLYKOTE® G-Rapid Plus or a similar lubricant. Place some multi-purpose grease on the screw thread and the contact surfaces of the screw heads.

3.8 Fitting a hollow shaft with GRIPMAXX™ (Option: M)

NOTICE

Damage to the gear unit due to incorrect installation

- Do not tighten the tensioning bolts of the shrink disc until the solid shaft and the torque bush are in the correct position.

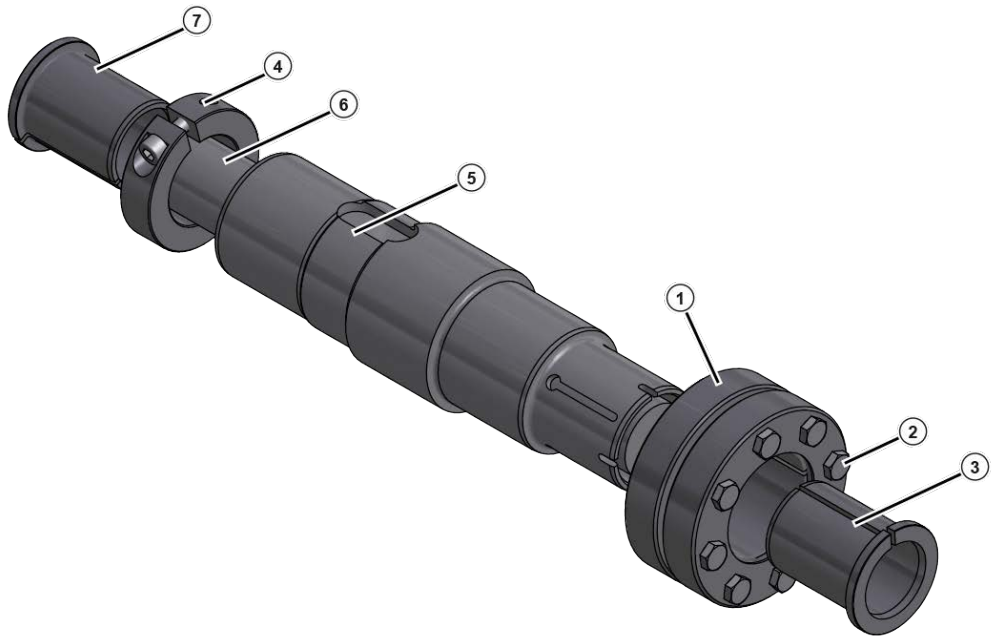

1	Shrink disc	5	Hollow shaft (gear unit)
2	Tensioning bolts	6	Solid shaft (machine)
3	Torque bush	7	Support bush
4	Clamping ring		

Figure 12: GRIPMAXX™, exploded diagram

Send Quote Requests to info@automatedpt.com
Call +1(800)985-6929 To Order or Order Online At Nordgearmotors.com

Send Quote Requests to info@automatedpt.com Call +1(800)985-6929 To Order or Order Online At Nordgearmotors.com

Take all expected peak loads into account when dimensioning the solid shaft or the machine shaft.

The solid shaft material must have a minimum yield strength of 360N/mm^2. This ensures that no permanent deformation occurs due to the clamping force.

Do not use any lubricants, corrosion protection agents, assembly paste or other coatings on the mating surfaces of the shaft, the bushes, the clamping rings or the shrink disc.

Prerequisites

- The solid shaft [6] must be free from burrs, corrosion, lubricants or other foreign bodies.
- The hollow shaft [5], the bushes [3], [7], the clamping ring [4] and the shrink disc [1] must be free from dirt, grease or oil.
- The solid shaft diameter must be within the following tolerances:

Metric machine shafts		
From	To	ISO 286-2 Tolerance h11(-)
Ø [mm]	Ø [mm]	[mm]
10	18	-0.11
18	30	-0.13
30	50	-0.16
50	80	-0.19
80	120	-0.22
120	180	-0.25

Imperial machine shafts		
From	To	ISO 286-2 Tolerance h11(-)
Ø [in]	Ø [in]	[in]
0.4375	0.6875	-0.004
0.7500	1.0625	-0.005
1.1250	1.9375	-0.006
2.0000	3.1250	-0.007
3.1875	4.6875	-0.008
4.7500	7.0625	-0.009

Table 4: Permissible machine shaft tolerances

Fitting procedure

1. Determine the correct installation position of the shrink disc [1] on the gear unit. Ensure that the position of the hollow shaft [5] corresponds to the details in the order.
2. Slide the support bush [7] and the clamping ring [4] onto the solid shaft [6]. Ensure that the support bush is correctly positioned. Secure the support bush [7] with the clamping ring [4] by tightening the clamping ring bolt with the appropriate torque (see chapter 7.3 "Screw tightening torques").
3. Push the gear unit onto the secured support bush [7], up to the stop against the clamping ring.
4. Slightly loosen the tensioning bolts [2] and push the shrink disc [1] onto the solid shaft.
5. Push the torque bush [3] onto the solid shaft.
6. Tighten the 3 or 4 tensioning bolts [2] until finger-tight and ensure that the outer rings of the shrink disc are pulled together parallel. Then tighten the remaining bolts.
7. Tighten the tensioning bolts successively in a clockwise direction by several turns – **not crosswise** – with approx. ¼ rotation of the bolt per turn. Use a torque wrench to achieve the tightening torque specified on the shrink disc.

   After tightening the tensioning bolts, there must be an even gap between the clamping flanges. If this is not the case, dismantle the shrink disc connection and check the fit.

Send Quote Requests to info@automatedpt.com
Call +1(800)985-6929 To Order or Order Online At Nordgearmotors.com

Send Quote Requests to info@automatedpt.com Call +1(800)985-6929 To Order or Order Online At Nordgearmotors.com

Dismantling procedure

WARNING

Danger of injury due to sudden mechanical release

The elements of the shrink disc are under great mechanical tension. Sudden release of the outer rings produces high separating forces and can result in uncontrolled detachment of shrink disc components.

- Do not remove any tensioning bolts if you have not ensured that the external outer rings of the shrink disc have been released from the inner ring.

1. Unscrew the tensioning bolts [2] of the shrink disc in sequence, with approximately half a turn (180°), until the inner ring of the shrink disc can be moved.
2. Pull the shrink disc [1] with the torque bush [3] off from the shaft.
3. Remove the outer rings of the shrink disc from the conical inner ring. For this it may be necessary to lightly tap the bolts with a soft-face hammer or to lightly lever the outer rings apart.
4. Pull the gear unit off the machine shaft.

Clean all individual components before refitting. Check the bushes and the shrink disc for damage or corrosion. Replace the bushes and the shrink disc if they are not in perfect condition. Coat the conical seat of the outer rings and the outside of the clamping ring with MOLYKOTE® G-Rapid Plus or a similar product. Place some multi-purpose grease on the screw thread and the contact surfaces of the screw heads.

3.9 Fitting the covers (option: H, H66)

Use all fastening screws. Secure the fastening screws by coating them with securing lubricant, e.g. Loctite 242, Loxeal 54-03. Tighten the fastening screws with the correct torque (see chapter 7.3 "Screw tightening torques").

For covers with Option H66, press in the new condition closing cap by tapping it lightly with a hammer.

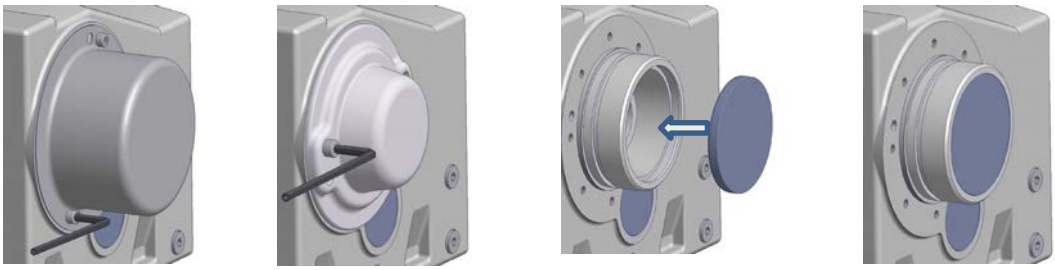

Figure 13: Fitting the covers, Option SH, Option H, and Option H66

Send Quote Requests to info@automatedpt.com
Call +1(800)985-6929 To Order or Order Online At Nordgearmotors.com

Send Quote Requests to info@automatedpt.com Call +1(800)985-6929 To Order or Order Online At Nordgearmotors.com

3.10 Fitting the covers

Some versions of universal worm gear units are delivered as standard with a plastic cover cap. The cover cap protects the radial shaft seals against the entry of dust and other contamination. The cover cap can attached on the A side or the B side. It can be removed by hand without tools.

NOTICE

Damage to the expansion elements of the cover cap

- Do not jam the cover cap when pulling it off or attaching it.

Pull the cover cap off vertically prior to the installation of the universal worm gear unit. After completing the fitting, attach the cover cap onto the right side by attaching the expanding elements into the threaded holes on the output flange.

Figure 14: Disassembly and assembly of the cover cap

Send Quote Requests to info@automatedpt.com
Call +1(800)985-6929 To Order or Order Online At Nordgearmotors.com

Send Quote Requests to info@automatedpt.com Call +1(800)985-6929 To Order or Order Online At Nordgearmotors.com

3.11 Fitting a standard motor (Option: IEC, NEMA, AI, AN)

Depending on the gear unit type, exceptions are permissible with the maximum motor weights. These are indicated in the tables below and must not be exceeded.

Maximum permitted motor weights														
Motor size	63	71	80	90	100	112	132	160	180	200	225	250	280	315
Max. motor weight [kg]	**25**	**30**	**50**	**50**	**80**	**80**	**100**	**250**	**250**	**350**	**500**	**1000**	**1000**	**1500**
SK 32, SK 3282, SK 9032.1, SK 32100, SK 772.1, SK 773.1					100	100								
SK 42, SK 4282, SK 9042.1, SK 42125					100	100	130	200						
SK 52, SK 63, SK 5282, SK 6382, SK 9052.1, SK 872.1, SK 873.1, SK 972.1, SK 973.1					100	100	130							
SK 62, SK 73, SK 83, SK 6282, SK 7382, SK 8382, SK 9072.1					100	100	130							
SK 72, SK 82, SK 93, SK 103, SK 7282, SK 8282, SK 9382, SK 10382.1, SK 9082.1, SK 9086.1, SK 9092.1, SK 9096.1							130							
SK 920072.1, SK 92072.1, SK 0, SK 071.1, SK 0182.1, SK 930072.1, SK 93072.1, SK 93372.1			40											
SK 1382NB, SK 1382.1, SK 92372, SK 92372.1, SK 12063, SK 372.1, SK 371.1, SK 1382.1 GJL					60									

Table 5: Motor weights IEC motors

Send Quote Requests to info@automatedpt.com
Call +1(800)985-6929 To Order or Order Online At Nordgearmotors.com

Send Quote Requests to info@automatedpt.com Call +1(800)985-6929 To Order or Order Online At Nordgearmotors.com

Maximum permitted motor weights														
Motor size		56C		140TC		180TC	210TC	250TC	280TC	320TC	360TC	400TC		
Max. motor weight [kg]		**30**		**50**		**80**	**100**	**200**	**250**	**350**	**700**	**700**		
SK 62, SK 72, SK 73, SK 83, SK 93, SK 9072.1, SK 6282, SK 7282, SK 7382, SK 8382, SK 9382											500	500		

Table 6: Motor weights NEMA motors

Fitting a standard motor to the IEC adapter (Option IEC) or NEMA adapter (Option NEMA)

1. Clean the motor shaft and the flange surfaces of the motor and motor adapter, and check them for damage. Check the motor dimensions. The dimensions must be within the tolerances according to DIN EN 50347 or NEMA MG1 Part 4.
2. For motor sizes 90, 160, 180 and 225, position the spacer bushes that may be provided onto the motor shaft.
3. Position the half-coupling onto the motor shaft so that the motor parallel key engages into the groove of the half-coupling. Tighten the half-coupling in accordance with the motor manufacturer's instructions. With standard helical gear units, observe dimension B between the half-coupling and the collar (see "Figure 15"). Adjust the coupling in accordance with the specifications indicated on the adhesive plate for certain **NEMA adapters** .
4. If the half-coupling contains a setscrew, secure the coupling axially on the shaft. Coat the setscrew with securing adhesive before screwing it in, e.g. Loctite 242 or Loxeal 54-03, and tighten it with the correct torque (see chapter 7.3 "Screw tightening torques").
5. Sealing of the flange surfaces is recommended if the motor is installed outside or in a humid environment. Completely coat the flange surfaces with surface sealant, e.g. Loctite 574 or Loxeal 58-14.
6. Attach the motor to the adapter. Also attach the enclosed ring gear or the enclosed gear sleeve (see figure below).
7. Tighten the adapter bolts with the correct torque (see chapter 7.3 "Screw tightening torques").

Send Quote Requests to info@automatedpt.com
Call +1(800)985-6929 To Order or Order Online At Nordgearmotors.com

Send Quote Requests to info@automatedpt.com Call +1(800)985-6929 To Order or Order Online At Nordgearmotors.com

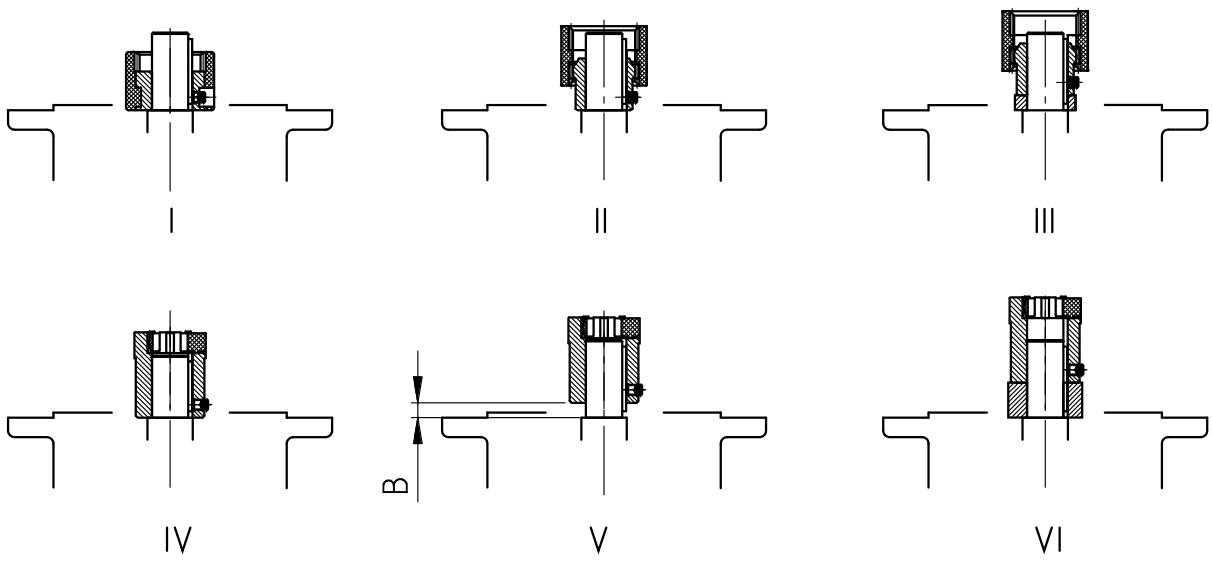

Figure 15: Fitting the coupling onto the motor shaft - various types of coupling

I Curved tooth coupling (BoWex®), one-piece

II Curved tooth coupling (BoWex®), two-piece

III Curved tooth coupling (BoWex®), two-part with spacer bush

IV Claw coupling (ROTEX®), two-piece

V Claw coupling (ROTEX®), two-piece, observe dimension B:

Standard helical gear units: SK 0, SK 01, SK 20, SK 25, SK 30, SK 33 (2-stage) SK 010, SK 200, SK 250, SK 300, SK 330 (3-stage)		
	IEC size 63	IEC size 71
Dimension B (Fig. V)	B = 4.5 mm	B = 11.5 mm

VI Claw coupling (ROTEX®), two-piece with spacer bush

Fitting a standard motor to the IEC adapters AI160–AI315 (Option AI) or NEMA adapters AN250TC–AN400TC (Option AN)

1. Clean the motor shaft and the flange surfaces of the motor and motor adapter, and check them for damage. Check the motor dimensions. The dimensions must be within the tolerances according to DIN EN 50347 or NEMA MG1 Part 4.
2. Remove the motor shaft's key.

   Note: For adapter AI315, the key does not have to be dismantled. Continue with Step 5. of this description.
3. With the adapters AI160, AI180 and AI225, attach the spacer bush supplied with the product.
4. Attach the key supplied with the product (see "Table7: Motor parallel keys").
5. For the attachment of the half-coupling, heat up the half-coupling to approx. 100 °C. Position the half-coupling as follows:
   – Push AI160, AI180 and AI225 on to the spacer bush.
   – Push AI200, AI250, AI280 and AI315 on to the motor shaft collar.
   – AN250TC–AN400TC until dimension A has been attained (see "Table 8: Position of the half-coupling on the NEMA motor shaft")

Send Quote Requests to info@automatedpt.com
Call +1(800)985-6929 To Order or Order Online At Nordgearmotors.com

Send Quote Requests to info@automatedpt.com Call +1(800)985-6929 To Order or Order Online At Nordgearmotors.com

6. If the half-coupling contains a setscrew, secure the coupling axially on the shaft. Coat the setscrew with securing adhesive before screwing it in, e.g. Loctite 242 or Loxeal 54-03, and tighten it with the correct torque (see chapter 7.3 "Screw tightening torques").
7. Sealing of the flange surfaces is recommended if the motor is installed outside or in a humid environment. Completely coat the flange surfaces with surface sealant, e.g. Loctite 574 or Loxeal 58-14.
8. Attach the motor to the adapter. Also attach the enclosed ring gear or the enclosed gear sleeve (see **Figure 15: Fitting the coupling onto** the motor shaft - various types of coupling). For the AN360TC and AN400TC adapters, attach the adapter flange to the motor first, and screw the motor onto the adapter.
9. Tighten the adapter bolts with the correct torque (see chapter 7.3 "Screw tightening torques").

IEC/NEMA type	Coupling	Shaft ø	Motor shaft's key
AI 160	R42	42	AB12x8x45
AI 180	R48	48	AB14x9x45
AN 250	R42	41.275	B3/8x3/8x1 1/2
AN 280	R48	47.625	B1/2x1/2x1 1/2
AI 200	R55	55	B16x10x50x
AN 320	R55	53.976	B1/2x1/2x1 1/2
AI 225	R65	60	B18x11x70
AN 360 R350	R65	60.325	B5/8x5/8x2 1/4
AI 250	R75	65	B18x11x70
AI 280	R75	75	B20x12x70
AN 360 R450	R75	60.325	B5/8x5/8x3 1/8
AN 400	R75	73.025	B3/4x3/4x3 1/4

Table7: Motor parallel keys

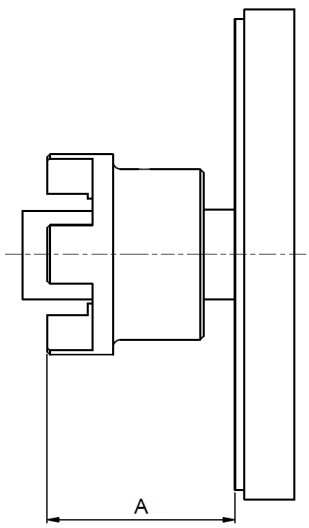

NEMA type	Coupling size	A [mm]
N250TC R350	R42	83
N250TC 300S	R42	86
N280TC R350	R48	87.5
N280TC 300S	R48	102.5
N320TC	R55	91
N360TC/350	R65	126.5
N360TC/450	R75	150.5
N400TC	R75	164.5

Table 8: Position of the half-coupling on the NEMA motor shaft

Send Quote Requests to info@automatedpt.com
Call +1(800)985-6929 To Order or Order Online At Nordgearmotors.com

Send Quote Requests to info@automatedpt.com Call +1(800)985-6929 To Order or Order Online At Nordgearmotors.com

3.12 Mounting of the cooling coil onto the cooling system

WARNING

Risk of injury due to pressure discharge

- Ensure that the pressure is released from the cooling circuit before carrying out any work on the gear unit.

NOTICE

Damage to the cooling coil

- Do not twist the connection pieces during installation.
- Ensure load-free assembly of the connection pipes or hoses.
- Even after the installation, no external forces must be able to act on the cooling coil via the connection pieces.
- Prevent vibrations from reaching the cooling coil during operation.

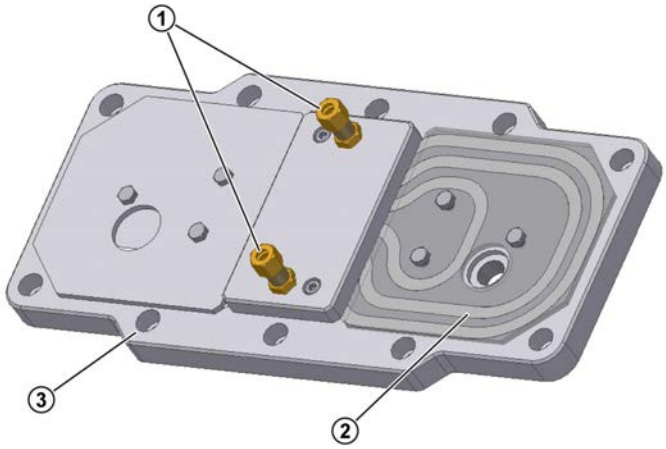

Explanation

1 Connection pieces with cutting ring screw connections
2 Cooling coil
3 Housing cover

Figure 16: Cooling cover

The cooling coil is installed in the housing cover. For the inlet and outlet of cooling fluid, connection pieces with cutting ring screw connections according to DIN 2553 are provided on the housing cover for a connection of a pipe with an external diameter of 10 mm.

Remove the sealing plug from the screw necks prior to assembly and flush the cooling coil to prevent any contamination of the cooling system. Then, connect the connection pieces with the coolant circuit. The flow direction of the coolant is irrelevant.

3.13 Installation of the external oil/air cooler

Information

Installation information

To ensure optimal air supply, the distance between the cooling unit and the wall should be at least 600 mm.

Send Quote Requests to info@automatedpt.com
Call +1(800)985-6929 To Order or Order Online At Nordgearmotors.com

Send Quote Requests to info@automatedpt.com Call +1(800)985-6929 To Order or Order Online At Nordgearmotors.com

3.13.1 Connecting hose lines

NOTICE

Gear unit is supplied without oil filling

- Fill the gear unit with oil before commissioning.

The scope of delivery includes the oil/air cooler and the necessary hose lines.

Connect the oil/air cooler according to the illustration. Make sure that the oil/air cooler has not been mounted above the gear unit.

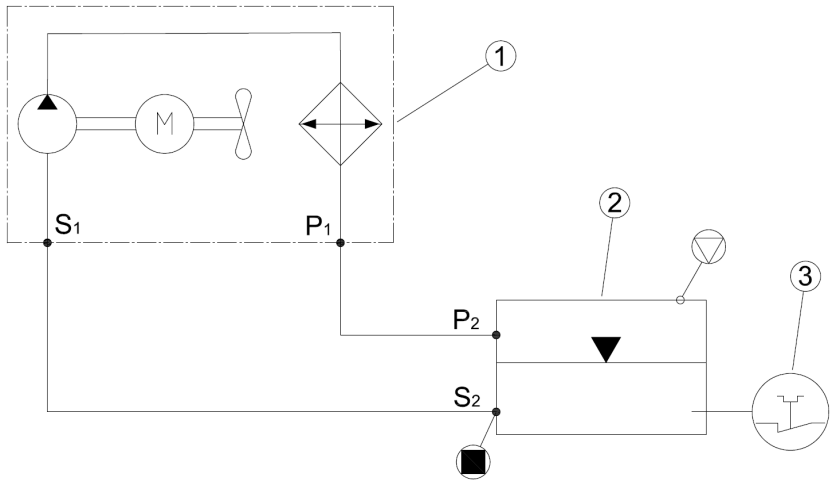

1	Oil/air cooler
2	Gear unit
3	Optional temperature monitoring
S	Intake connection/oil drain of the gear unit
P	Gear unit pressure connection/connection above or below the oil level

Figure 17: Connection of the oil/air cooler

Fasten the union nuts according to 7.3 "Screw tightening torques".

After assembling the oil lines, fill the gear unit housing with the gear oil type that is printed on the name plate. The oil quantity on the name plate is a guide value and may vary depending on the gear ratio. Approximately 4.5 l of oil are additionally required for the hose lines. When filling, use the oil level screw as an indicator for the correct oil level.

3.13.2 Electrical connection

Ensure the electrical connection according to the operating and installation instructions of the oil/air cooler. Make sure that the direction of rotation of the motor or the fan wheel matches the information provided by the manufacturer of the cooling unit.

Send Quote Requests to info@automatedpt.com
Call +1(800)985-6929 To Order or Order Online At Nordgearmotors.com

Send Quote Requests to info@automatedpt.com Call +1(800)985-6929 To Order or Order Online At Nordgearmotors.com

3.14 Installation of an oil expansion chamber (Option: OA)

3.14.1 Installation of the sizes I, II and III

The oil expansion chamber is available in 3 sizes with different capacities:

- 0.7 l (Size I)
- 2.7 l (Size II)
- 5.4 l (Size III)

The oil expansion chamber must be mounted vertically with the hose connection facing downwards and the vent screw facing upwards. Taking the hose length into account, the container should be fitted as high as possible. For suggestions for the position of the oil expansion chamber, see the following illustration.

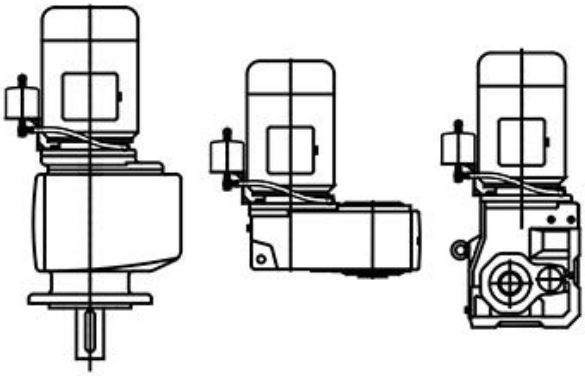

Figure 18: Position of the oil expansion chamber

1. After installing the gear unit, remove the vent screw.
2. Screw in the reduction or extension with the existing sealing ring.

   For gear units having an oil maintenance bore with an M10x1 thread, also consider document WN 0-521 35.

3. If the fastening screw is screwed into a through hole, seal the thread with a medium-strength screw securing material such as LOXEAL 54-03 or Loctite 242.
4. Screw on the expansion tank. If the necessary screw insertion depth of 1.5 × d can no longer be achieved, use a 5 mm longer screw. If a longer screw cannot be fitted, use a stud and a nut with appropriate dimensions.
5. Attach the vent hose with the enclosed hollow screws and seals.
6. Screw the enclosed M12 x 1.5 vent plug and sealing ring into the tank.

Send Quote Requests to info@automatedpt.com
Call +1(800)985-6929 To Order or Order Online At Nordgearmotors.com

Send Quote Requests to info@automatedpt.com Call +1(800)985-6929 To Order or Order Online At Nordgearmotors.com

3.14.2 Installation of sizes 0A and 0B

The oil expansion chamber must be mounted vertically with the hose connection facing downwards and the vent screw facing upwards. Taking the hose length into account, the container should be fitted as high as possible. Suggestions for the position of the oil expansion chamber see Figure 18. Note that with the M4 configuration with terminal box position in position 2, it is not possible to install the oil expansion chamber.

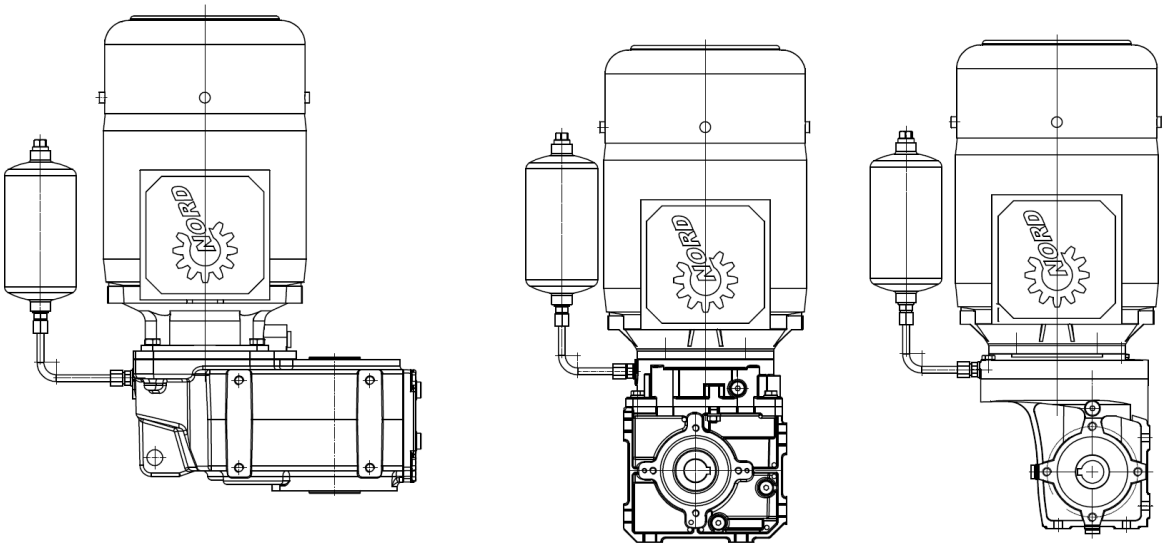

Figure 19: Position of the oil expansion chamber

1. After installing the gear unit, remove the oil level or vent screw.
2. Install the oil expansion chamber according to Figure 18. Align it parallel to the motor shaft.
3. Maintain the maximum tightening torque of 12 Nm for screwing the oil expansion chamber onto the gear unit housing.

3.15 Subsequent painting

For retrospective painting of the gear unit, the shaft sealing rings, rubber elements, pressure vent screws, hoses, type plates, adhesive labels and motor coupling components must not come into contact with paints, lacquers or solvents, as otherwise the components may be damaged or made illegible.

3.16 Electrical connection of the mounted motor

For geared motors (gear units with attached electric motor), the electric motor has its own operating instructions. If these operating instructions are not available, please request them from the motor manufacturer Ensure the electrical connection of the motor in accordance with the operating instructions of the motor. Usually, there is a connection diagram in the terminal box of the motor.

Send Quote Requests to info@automatedpt.com
Call +1(800)985-6929 To Order or Order Online At Nordgearmotors.com

Send Quote Requests to info@automatedpt.com Call +1(800)985-6929 To Order or Order Online At Nordgearmotors.com

4 Commissioning

4.1 Checking the oil level

Check the oil level before commissioning (see chapter 5.2 "Service and maintenance work").

4.2 Activating the vent

If venting of the gear unit is provided, the vent or the pressure vent must be activated before commissioning. Double gear units consist of two single units, are equipped with 2 oil chambers and possibly 2 vents.

To activate, remove the sealing cord in the vent screw. For the vent screw position, see Section 7.1 "Versions and mounting position".

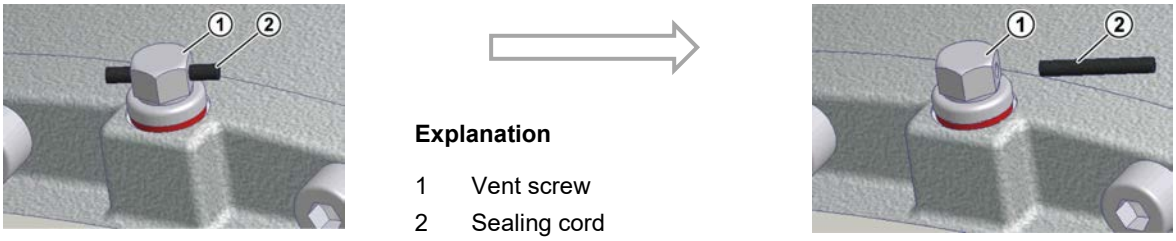

Explanation

1 Vent screw
2 Sealing cord

Figure 20: Activating the vent screw

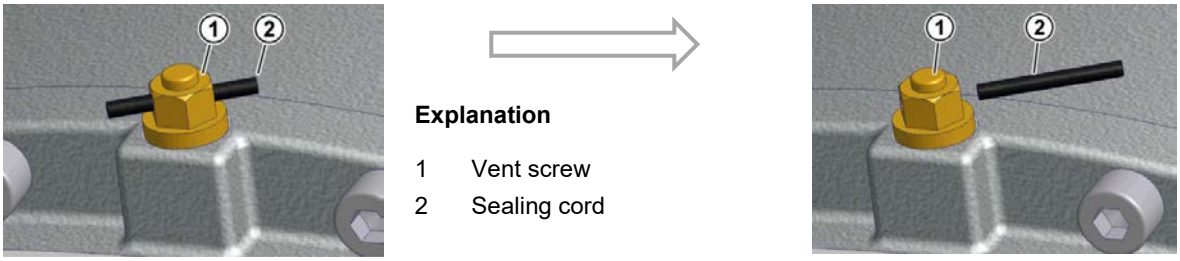

Explanation

1 Vent screw
2 Sealing cord

Figure 21: Activating the pressure vent screw

Special pressure vents are supplied as loose parts. Unscrew the vent screw and replace it with the special pressure vent and seal.

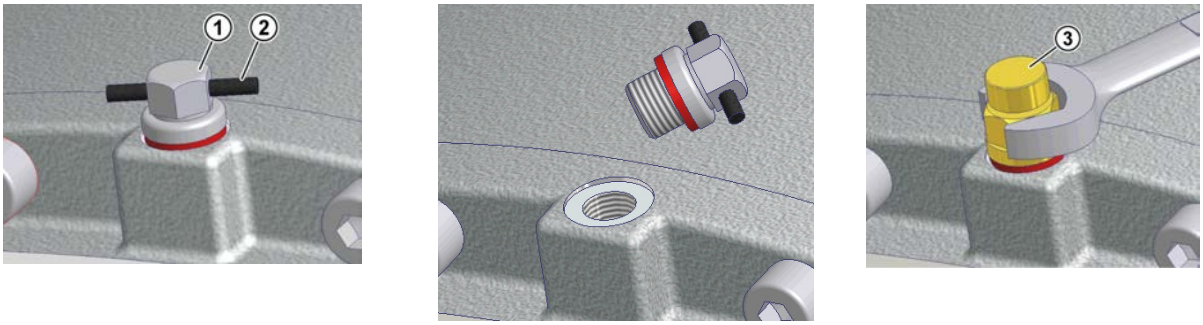

Explanation

1 Vent screw 2 Sealing cord 3 Special vent screw

Figure 22: Removing the vent plug and fitting the special pressure vent

Send Quote Requests to info@automatedpt.com
Call +1(800)985-6929 To Order or Order Online At Nordgearmotors.com

Send Quote Requests to info@automatedpt.com Call +1(800)985-6929 To Order or Order Online At Nordgearmotors.com

4.3 Activating the automatic lubricant dispenser

Some gear unit types with standard motor (Option IEC/NEMA, not AI/AN) have an automatic lubricant dispenser for the roller bearings. The lubricant sensor must be activated prior to commissioning the gear unit The cartridge case cover of the adapter for attaching an IEC/NEMA standard motor has a red information sign for activation of the lubricant dispenser. Opposite to the lubricant dispenser there is a grease escape hole which is closed with a G1/4 cap screw. After activation of the lubricant dispenser, the cap screw can be removed and replaced with the grease collection container (Part No. 28301210) which is supplied separately with the delivery.

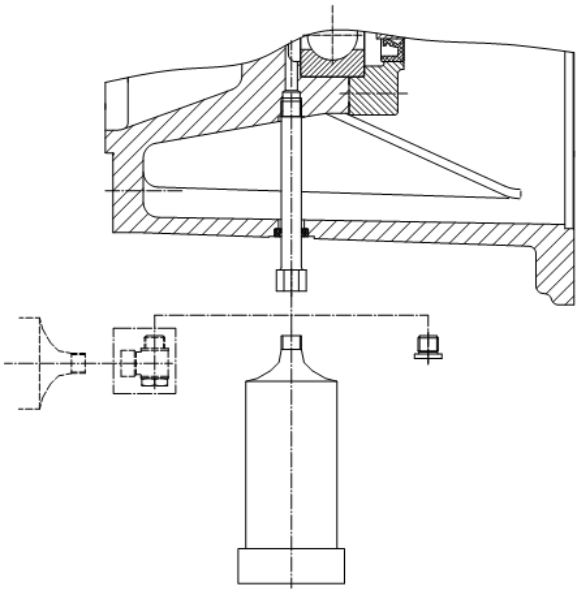

Figure 23: Fitting the grease collection container

Send Quote Requests to info@automatedpt.com
Call +1(800)985-6929 To Order or Order Online At Nordgearmotors.com

Send Quote Requests to info@automatedpt.com Call +1(800)985-6929 To Order or Order Online At Nordgearmotors.com

Procedure:

1. Loosen and remove the cap screws.
2. Remove the cartridge cover.
3. Screw the activation screw into the lubricant dispenser until the lug breaks off at the defined fracture point.
4. Re-fit the cartridge cover. Attach the cartridge cover with the cap screws (see chapter 7.3 "Screw tightening torques").
5. Mark month and year of activation on the adhesive label.

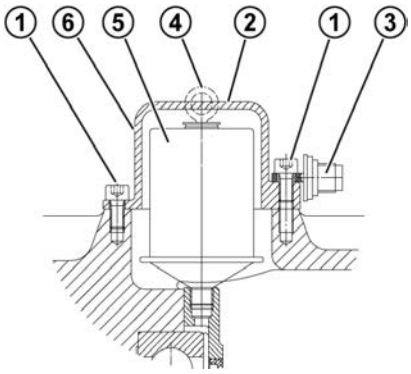

Explanation

1	Cap screws M8 x 16
2	Cartridge cover
3	Activation screw
4	Lug
5	Lubricant sensor
6	Position of adhesive label

Figure 24: Activating the automatic lubricant sensor with standard motor mounting

Adhesive label

Figure 25: Adhesive label

Send Quote Requests to info@automatedpt.com
Call +1(800)985-6929 To Order or Order Online At Nordgearmotors.com

Send Quote Requests to info@automatedpt.com Call +1(800)985-6929 To Order or Order Online At Nordgearmotors.com

4.4 Cooling coil (Option: CC)

NOTICE

Gear unit damage due to overheating

- Only start up the drive after the cooling coil has been connected to the cooling circuit, and the cooling circuit has been put into operation.

If there is a danger of frost, a suitable anti-freeze solution must be added to the cooling water in due time.

The coolant must have a thermal capacity similar to water.

- Specific thermal capacity of water at 20 °C: c = 4.18 kJ/kgK

Clean, industrial water without any air bubbles or sediments is recommended as a coolant. The hardness of the water must be between 1 dH and 15 dH; the pH value must be between pH 7.4 and pH 9.5. No aggressive liquids may be added to the coolant!

The **coolant pressure** must not exceed **8 bar**. We also recommend fitting a pressure reducer at the coolant inlet to avoid damage due to excessive pressure.

The **coolant inlet temperature** must not exceed 40 °C. **10 °C** are recommended.

The required **coolant flow rate** is **10 l/min**.

The temperature and the flow rate of the cooling fluid must be monitored and ensured. The drive must be shut down if the permissible temperature is exceeded.

Send Quote Requests to info@automatedpt.com
Call +1(800)985-6929 To Order or Order Online At Nordgearmotors.com

Send Quote Requests to info@automatedpt.com Call +1(800)985-6929 To Order or Order Online At Nordgearmotors.com

4.5 External oil/air cooler

NOTICE

Gear unit damage due to overheating

- Only start up the drive after the external oil/air cooler has been connected and put into operation.

NOTICE

Damage due to high line pressure

- In case of cold starting, ensure that the maximum permissible viscosity of the lubricant is not exceeded, in order to prevent excess pressure in the pump and the lubrication lines.

Main components of the external oil/air cooler:

- Motor
- Pump
- Heat exchanger

After mounting and filling the oil/air cooler, check the oil level in the gear unit. Make sure that the oil/air cooler is vented.

For basic information on the available versions of the oil/air cooler, refer to our G1000 catalogue (see www.nord.com).

For detailed information on the external oil/air cooler, refer to the relevant operating instructions. The information contained therein takes precedence.

Unless otherwise indicated by the manufacturer of the external oil/air cooler, the following applies to it:

- Minimum line pressure on the suction side: -0.4 bar
- Maximum viscosity of the lubricant: 1000 mm²/s

Select a motor speed on the coil/air cooler, which ensures complete filling of the pump. This can be achieved by not falling below the minimum line pressure on the suction side.

Information

Gear oil temperature regulation

It is recommended to only switch on the cooling unit at an oil temperature above 60 °C and to switch it off at an oil temperature below 45 °C. For this purpose, temperature regulation can be optionally provided by means of a thermistor (PT100), which has been installed in the oil sump of the gear unit.

The maximum permissible gear oil temperature must not exceed +90 °C.

4.6 Running-in time for the worm gear unit

In order to achieve maximum efficiency of the worm gear unit, the gear unit must be subjected to a running-in period of approx. 25 h – 48 h under maximum load.

There may be a reduction in efficiency before the running-in period is complete.

Send Quote Requests to info@automatedpt.com
Call +1(800)985-6929 To Order or Order Online At Nordgearmotors.com

Send Quote Requests to info@automatedpt.com Call +1(800)985-6929 To Order or Order Online At Nordgearmotors.com

4.7 AI/AN adapter operation with option BRG1

In connection with option BRG1 (manual re-lubrication), the IEC adapters (Option: AI) or the NEMA adapters (Option: AN) may be operated at a maximum input speed of 1800 rpm. Higher speeds would lead to premature failure of the seals and coupling spider.

4.8 Checklist

Checklist		
Subject of check	**Date of check:**	**Information see Section**
Is the vent screw activated or the pressure vent screwed in?		4.2
Does the required mounting position comply with the actual position?		7.1
Are the external gear shaft forces within permitted limits (chain tension)?		3.5
Is the torque arm installed correctly?		3.6
Are rotating parts covered with a contact guard?		3.9
Is the automatic lubricant sensor activated?		4.3
Is the cooling system connected?		3.12 3.13

Table 9: Checklist for commissioning

Send Quote Requests to info@automatedpt.com
Call +1(800)985-6929 To Order or Order Online At Nordgearmotors.com

Send Quote Requests to info@automatedpt.com Call +1(800)985-6929 To Order or Order Online At Nordgearmotors.com

5 Service and maintenance

5.1 Inspection and maintenance intervals

Inspection and maintenance intervals	Inspection and maintenance work	Information, see Section
At least every six months	• Visual inspection	5.2.1
	• Check for running noises	5.2.2
	• Oil level check	5.2.3
	• Visual inspection of hose	5.2.5
	• Re-grease/remove excess grease (only applicable for free input shaft/option W, for agitator bearings/option VL2/VL3 and for AI…/AN… adapters with option BRG1)	5.2.6
	• Replace the automatic lubricant sensor/remove excess grease (for IEC/NEMA standard motor installations, an interval of one year for the replacement of the lubricant sensor is permissible for running times of < 8 h/day); drain or replace the lubricant collection container at each second replacement of the lubricant sensor	5.2.7
For operating temperatures up to 80 °C Every 10,000 operating hours, at least every 2 years	• Change the oil (if filled with synthetic products, the interval is doubled; with the use of ***SmartOilChange***, the interval is specified by ***SmartOilChange***)	5.2.8
	• Clean or replace the vent screw as necessary	5.2.9
	• Replace the radial shaft seals at every oil change, at least every 10,000 operating hours	5.2.10
Every 20,000 operating hours, at least every 4 years	• Re-lubricate the bearings in the gear unit	5.2.11
At least every 10 years	• General overhaul	5.2.12

Table 10: Inspection and maintenance intervals

Information

The oil change intervals apply for normal operating conditions and operating temperatures up to 80 °C. The oil change intervals are reduced in the case of extreme operating conditions (operating temperatures higher than 80 °C, high humidity, aggressive environment and frequent fluctuations in the operating temperature).

Information

SmartOilChange determines the optimum time for an oil change based on a continuous determination of the oil temperature. With ***SmartOilChange*** from Getriebebau NORD, this is achieved entirely on the basis of product-specific key data, the specified ambient temperature and internal measurement values of the power electronics such as the current consumption. Additional hardware is therefore not required for the Getriebebau NORD solution.

The measurement results are processed and interpreted by the integrated software and result in the display of the calculated residual time until the next oil change.

Send Quote Requests to info@automatedpt.com
Call +1(800)985-6929 To Order or Order Online At Nordgearmotors.com

Send Quote Requests to info@automatedpt.com Call +1(800)985-6929 To Order or Order Online At Nordgearmotors.com

5.2 Service and maintenance work

5.2.1 Visual inspection for leaks

The gear unit must be checked for leaks. Attention should be paid to escaping gear oil and traces of oil on the exterior or underneath the gear unit. In particular, the radial shaft seals, cover caps, screw fittings, hoses and housing joints should be checked.

Information

Radial shaft seals are components with a limited life and are subject to wear and ageing. The service life of radial shaft seals depends on various ambient conditions. Temperature, light (especially UV light), ozone and other gases and liquids affect the ageing process of radial shaft seals. Some of these influences may change the physical or chemical properties of the radial shaft seals and result in a significant reduction of their service life. Foreign matter (e.g. dust, sludge, sand, metallic particles) and excess temperature (excessive speed or external heating) accelerate the wear of the sealing lip. These sealing lips are made of an elastomer material and are lubricated with a special grease at the factory. This reduces the wear due to their function and ensures a long service life. An oil film in the region of the rubbing sealing lip is therefore normal and is not due to leakage (see chapter 7.5 "Leakage and leak-tightness").

NOTICE

Damage to the radial shaft seals through unsuitable cleaning agents

Unsuitable cleaning agents may damage the radial shaft seals, which may then cause an increased risk of leaks.

- Do not clean the gear unit with cleaning agents which contain acetone or benzol.
- Avoid contact with hydraulic oils.

If leaks are suspected, the gear unit should be cleaned, the oil level checked and checked again for leaks after approx. 24 hours. If a leak is confirmed (dripped oil), the gear unit must be repaired immediately. Please contact the NORD service department.

If the gear unit is equipped with a cooling coil in the housing cover, the connections and the cooling coil must be checked for leaks. If there are any leaks, these must be repaired immediately. Please contact the NORD service department.

5.2.2 Check for running noises

If the gear unit produces unusual running noises or vibrations, this could indicate damage to the gear unit. In this case the gear unit must be repaired immediately. Please contact the NORD Service department.

Send Quote Requests to info@automatedpt.com
Call +1(800)985-6929 To Order or Order Online At Nordgearmotors.com

Send Quote Requests to info@automatedpt.com Call +1(800)985-6929 To Order or Order Online At Nordgearmotors.com

5.2.3 Checking the oil level

Section 7.1 "Versions and mounting position"describes the mounting positions and the corresponding oil level screws. With double gear units, the oil level must be checked on both units. The pressure vent must be at the position marked in Section 7.1 "Versions and mounting position".

The oil level does not need to be checked on gear units without oil level screw (see chapter 7.1 "Versions and mounting position").

Gear unit types that are not supplied with an oil filling must be filled before the oil level is checked.

The oil level must only be carried out when the gear unit is at a standstill and has cooled down. Provide protection against accidental activation. Check the oil level with an oil temperature of between 10 °C to 40 °C.

Gear units with oil level screw

1. Unscrew the oil level screw corresponding to the mounting position (see chapter 7.1 "Versions and mounting position").

Information

At the first oil level check a small amount of oil may escape, as the oil level may be above the lower edge of the oil level hole.

2. The correct oil level is at the lower edge of the oil level hole. If the oil level is too low, adjust the oil level with the corresponding oil type.
3. Screw the oil level screw and all previously loosened screw connectors back in correctly.

Gear units with an oil level tank

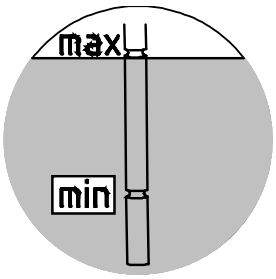

Figure 26: Checking the oil level with a dipstick

1. Screw the screw plug with dipstick (thread G1¼) out of the oil level container.
2. The oil level must be between the upper and lower marking when the dipstick is fully screwed in (see Figure 26). If the oil level is too low, adjust the oil level with the corresponding oil type.
3. Screw the screw plug with dipstick and all previously loosened screw connectors back in correctly.

Gear units with oil inspection glass

1. The oil level can be seen directly in the window.
2. The correct oil level is:
   - Maximum: the middle of the oil inspection glass,
   - Minimum: Lower edge of the oil inspection glass.
3. If the oil level is not correct, adjust the oil level by draining off oil or topping up with the type of oil stated on the name plate.

Send Quote Requests to info@automatedpt.com
Call +1(800)985-6929 To Order or Order Online At Nordgearmotors.com

Send Quote Requests to info@automatedpt.com Call +1(800)985-6929 To Order or Order Online At Nordgearmotors.com

5.2.4 Visual inspection of the rubber buffers (Option: G, VG)

If these show damage such as tears to the surface, the rubber elements must be replaced. In this case, please contact NORD Service.

5.2.5 Visual inspection of the hoses (Option: OT, CS2-X)

Gear units with an oil tank and external cooling units have rubber hoses.

Check the hoses and screw connectors for leaks, cuts, tears, porous areas and chafing. In case of damage, the hoses must be replaced. Please contact the NORD service department.

5.2.6 Re-greasing (Option: VL2, VL3, W, AI, AN)

Some gear unit designs are equipped with a re-greasing device.

For the agitator versions VL2 and VL3, unscrew the vent screw opposite the grease nipple prior to re-greasing. Inject grease until a quantity of 20 - 25g escapes from the vent hole. Screw the vent screw back in.

For option W and the IEC/NEMA adapters AI and AN with option BRG1, grease the outer roller bearing with approx. 20–25 g of grease at the grease nipple. With the IEC/NEMA adapters AI and AN, the grease nipple is located under a bolt-on inspection cover. Before re-greasing, unscrew the grease drain screw so that the excess grease can drain off. Remove the excess grease on the motor adapter.

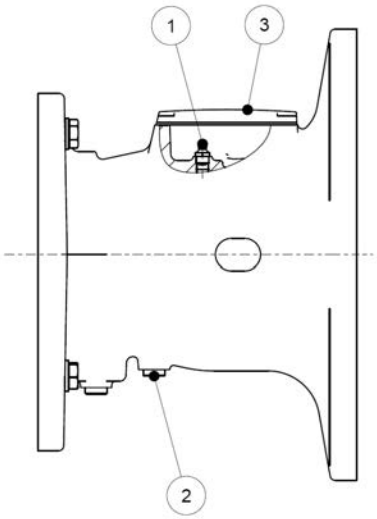

1: Conical grease nipple
2: Grease drain screw
3: Inspection cover

Figure 27: Re-grease IEC/NEMA adapters AI and AN with option BRG1

Recommended grease:

- Petamo GHY 133N (Klüber Lubrication)

Send Quote Requests to info@automatedpt.com
Call +1(800)985-6929 To Order or Order Online At Nordgearmotors.com

Send Quote Requests to info@automatedpt.com Call +1(800)985-6929 To Order or Order Online At Nordgearmotors.com

5.2.7 Replacing the automatic lubricant dispenser

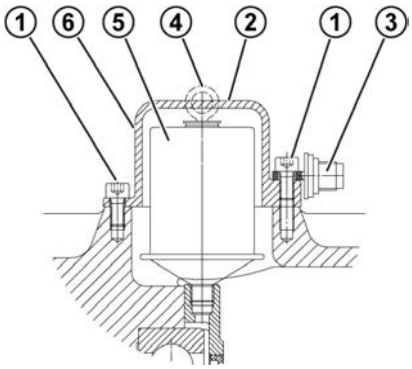

Explanation

1 Cap screws M8 x 16
2 Cartridge cover
3 Activation screw
4 Lug
5 Lubricant dispenser
6 Position of adhesive label

Figure 28: Switching the automatic lubricant sensor with standard motor mounting

(Lubricant sensor: Part No.: 28301000 or for food-compatible grease Part No.: 28301010)

1. Unscrew the cartridge cover.
2. Unscrew the lubricant sensor.
3. Screw in the new lubricant sensor.
4. Remove excess grease from the adapter.
5. Activate the full lubricant sensor (see chapter 4.3 "Activating the automatic lubricant dispenser").

The grease collection container (Part No. 28301210) must be replaced or drained with every second replacement of the lubricant sensor. Due to the form of the container, a residual amount of grease remains in the container.

1. Unscrew the grease collection container from the screw connector.
2. Press grease out of the grease collection container. To do this, push the internal piston back with a rod. The rod may have a maximum diameter of 10 mm. Collect the extracted grease and dispose it properly.
3. Check the collecting vessel. If the collecting vessel is damaged, replace it with a new one.
4. Screw the collecting vessel back into the drain hole on the motor adapter.

Send Quote Requests to info@automatedpt.com
Call +1(800)985-6929 To Order or Order Online At Nordgearmotors.com

Send Quote Requests to info@automatedpt.com Call +1(800)985-6929 To Order or Order Online At Nordgearmotors.com

5.2.8 Change the oil

On the figures in Section 7.1 "Versions and mounting position"the positions of the oil drain screw, the oil level screw and the vent screw, if present, are shown depending on the mounting position.

WARNING

Danger of burns

The oil may be very hot. Use protective equipment.

Procedure:

1. Place a collection vessel under the oil drain screw or the oil drain tap.
2. Screw out the oil level screw (if present) and the oil drain screw. When using an oil reservoir tank, screw out the screw plug with dipstick.
3. Completely drain the oil from the gear unit.
4. Check the sealing rings of the oil drain screw and the oil level screw. If a sealing ring is damaged, replace the corresponding screw. You can also clean the threads and coat them with securing adhesive e.g. Loctite 242 54-03 before screwing them in.
5. Screw the oil drain screw into the hole and tighten to the correct torque (see chapter 7.3 "Screw tightening torques").
6. Using a suitable filling device, refill with oil of the same type through the oil level hole until oil emerges from the oil level hole. The oil can also be filled through the hole of the pressure vent screw or of a screw plug located higher than the oil level. If an oil reservoir tank is used, fill the oil through the upper inlet (thread G1¼) until the oil level is set as described in Section 5.2.3 "Checking the oil level".
7. Check the oil level after at least 15 min, if using an oil level container after at least 30 min.

Information

The oil does not need to be replaced for gear units without oil drain screws (see chapter 7.1 "Versions and mounting position"). The gear unit are lifelong lubricated.

Standard helical gear units do not have an oil level screw. Here, new oil is injected through the threaded hole of the vent.

5.2.9 Clean and check vent screw

1. Unscrew the vent screw.
2. Thoroughly clean the vent screw, e.g. with compressed air.
3. Check the vent screw and the sealing ring. If the sealing ring is damaged, use a new vent screw.
4. Screw the vent screw back in.

5.2.10 Replacing the shaft sealing ring

Once the shaft sealing ring has reached the end of its service life, the oil film in the region of the sealing lip increases and a measurable leakage with dripping oil occurs. **The radial shaft seal must then be replaced.** The space between the sealing lip and the protective lip must be filled approximately 50 % with grease on fitting (recommended grease: PETAMO GHY 133N). Take care that after fitting, the new radial shaft seal does not run in the old wear track.

Send Quote Requests to info@automatedpt.com
Call +1(800)985-6929 To Order or Order Online At Nordgearmotors.com

Send Quote Requests to info@automatedpt.com Call +1(800)985-6929 To Order or Order Online At Nordgearmotors.com

5.2.11 Re-lubrication of bearings in the gear unit

NOTICE

Damage to the gear unit due to insufficient lubricant

There is a risk of bearing failure in the event of inadequate lubrication.

- It is essential to comply with the recommended intervals.
- Only use greases which are approved by Getriebebau NORD.
- Never mix different greases. If different greases are mixed, the gear unit may be damaged due to inadequate lubrication caused by incompatibility between the different greases.
- Avoid contamination of the grease with foreign substances and washing out of the grease by lubricating oil.

Please contact the NORD Service department for replacement of the grease in the roller bearings.

Recommended grease: Petamo GHY 133N - Klüber Lubrication. (see chapter 7.2.1 "Roller bearing greases")

5.2.12 General overhaul

The general overhaul must be carried out by a specialist workshop with suitable equipment and be qualified personnel with appropriate equipment in observance of national regulations and laws. We recommend that the general overhaul is carried out by the NORD Service Department.

During general overhaul, the gear unit is completely dismantled. The following work steps are carried out:

- All gear unit components are cleaned.
- All gear unit components are checked for damage.
- Damaged parts are replaced.
- All roller bearings are replaced.
- Replace all seals, radial shaft seals and Nilos rings.
- Optional: The back stop will be renewed.
- Optional: Replace the elastomers in the coupling.

Send Quote Requests to info@automatedpt.com
Call +1(800)985-6929 To Order or Order Online At Nordgearmotors.com

Send Quote Requests to info@automatedpt.com Call +1(800)985-6929 To Order or Order Online At Nordgearmotors.com

6 Disposal

Observe the current local regulations. In particular, lubricants must be collected and disposed of correctly.

Gear unit components	Material
Gearwheels, shafts, roller bearings, keys, circlips, …	Steel
Gear unit housing, housing components, …	Grey cast iron
Light alloy gear unit housing, light alloy housing components, …	Aluminium
Worm gears, sockets, ...	Bronze
Radial shaft seals, sealing caps, rubber components, …	Elastomers with steel
Coupling components	Plastic and steel
Flat seals	Asbestos-free sealing material
Gear oil	Additive mineral oil
Synthetic gear oil (adhesive label: CLP PG)	Polyglycol-based lubricants
Synthetic gear oil (adhesive label CLP PG)	Poly-alpha-olefin based lubricants
Cooling coil, embedding material of the cooling coil, screw fittings	Copper, epoxy, yellow brass

Table 11: Materials

Send Quote Requests to info@automatedpt.com
Call +1(800)985-6929 To Order or Order Online At Nordgearmotors.com

Send Quote Requests to info@automatedpt.com Call +1(800)985-6929 To Order or Order Online At Nordgearmotors.com

7 Appendix

7.1 Versions and mounting position

Information

The gear unit types SK 320, SK 172, SK 272, SK 372 as well as SK 273 and SK 373, the gear unit types SK 01282 NB, SK 0282 NB and SK 1382 NB and the UNIVERSAL/MINIBLOC gear unit types are lifelong lubricated. These gear units do not have oil level screws.

7.1.1 Explanation of symbols

Vent

Oil level

Oil drain

Send Quote Requests to info@automatedpt.com
Call +1(800)985-6929 To Order or Order Online At Nordgearmotors.com

Send Quote Requests to info@automatedpt.com Call +1(800)985-6929 To Order or Order Online At Nordgearmotors.com

7.1.2 UNIVERSAL/MINIBLOC worm gear units

NORD UNIVERSAL/MINIBLOC worm gear units are suitable for all installation positions. They have an oil filling which is independent of the mounting position.

As an option, types SI and SMI can be equipped with a vent screw. Gear units with vents must be installed in the stated mounting position.

Types SI, SMI, S, SM and SU as 2-stage gear unit types and types SI, SMI as worm gear units for direct motor mounting have an oil filling which depends on the mounting position and must be installed in the stated position.

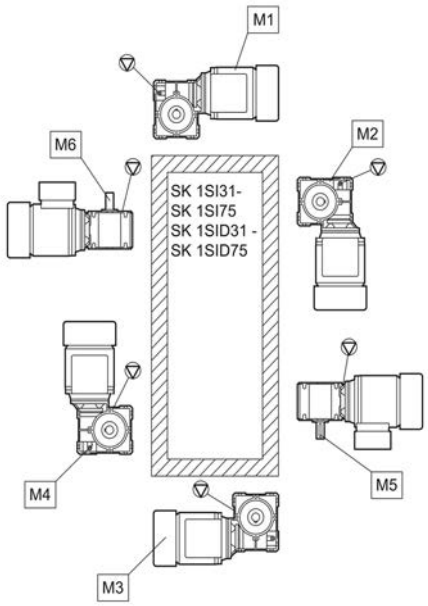

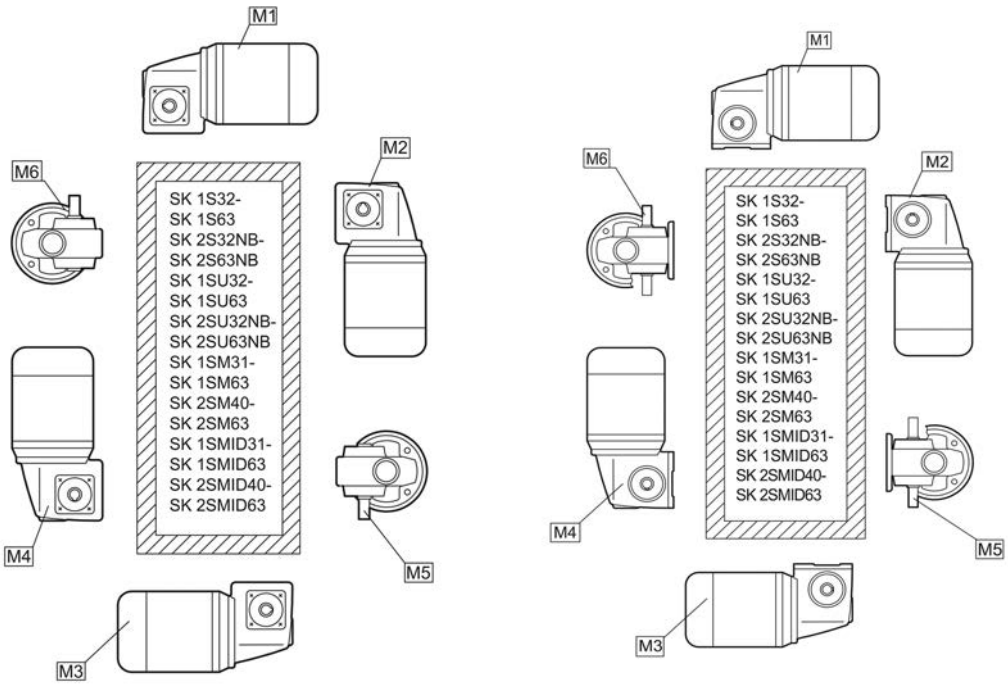

Send Quote Requests to info@automatedpt.com
Call +1(800)985-6929 To Order or Order Online At Nordgearmotors.com

Send Quote Requests to info@automatedpt.com Call +1(800)985-6929 To Order or Order Online At Nordgearmotors.com

7.1.3 Parallel shaft gear units with oil level tank

The following illustration applies to the M4 configuration of gear unit types SK 9282, SK 9382, SK 10282, SK 10382, SK 10382.1, SK 11282, SK 11382, SK 11382.1 and SK 12382 with oil reservoir tank.

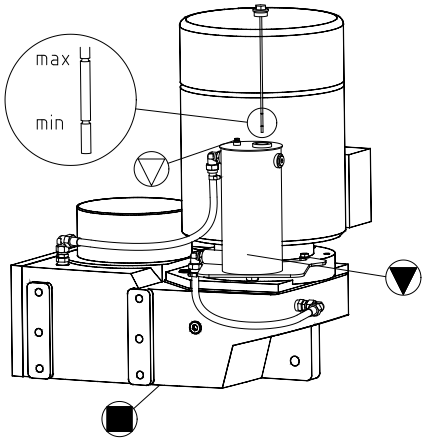

Figure 29: Parallel shaft gear units with oil level tank

Send Quote Requests to info@automatedpt.com
Call +1(800)985-6929 To Order or Order Online At Nordgearmotors.com

Send Quote Requests to info@automatedpt.com Call +1(800)985-6929 To Order or Order Online At Nordgearmotors.com

7.1.4 Overview of mounting positions

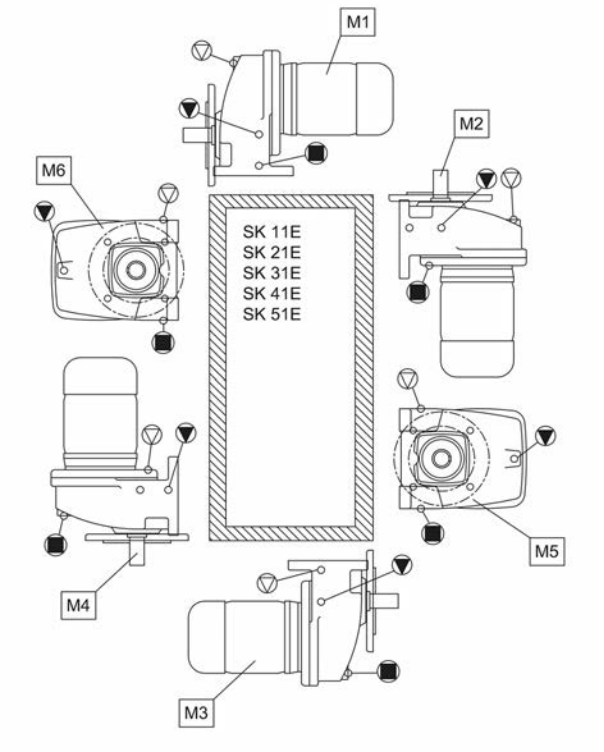

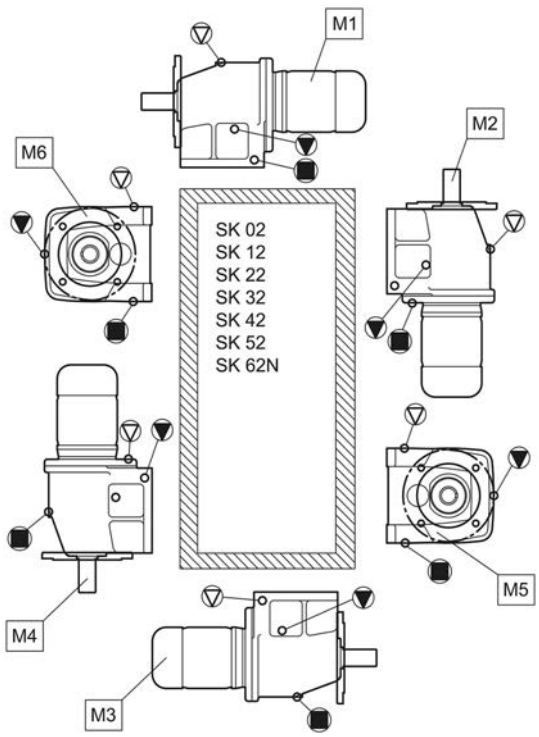

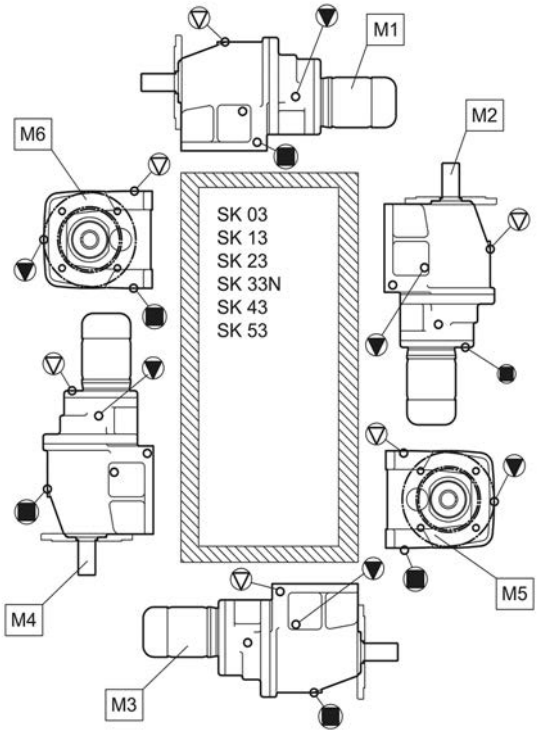

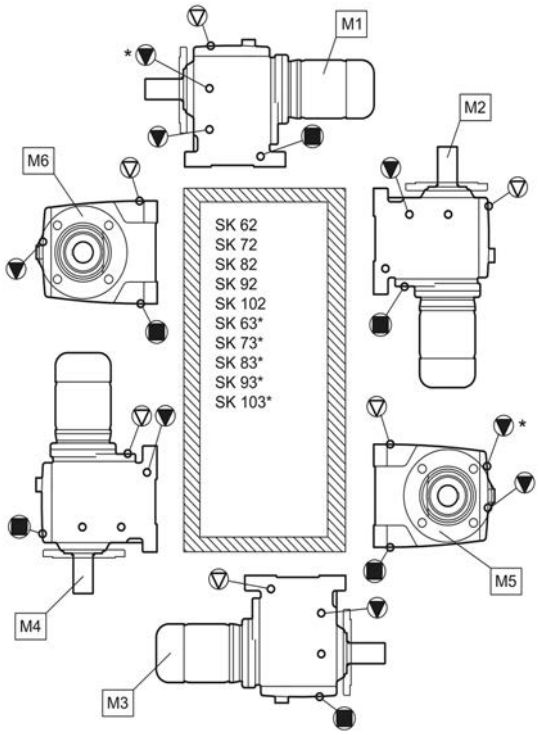

Send Quote Requests to info@automatedpt.com
Call +1(800)985-6929 To Order or Order Online At Nordgearmotors.com

Send Quote Requests to info@automatedpt.com Call +1(800)985-6929 To Order or Order Online At Nordgearmotors.com

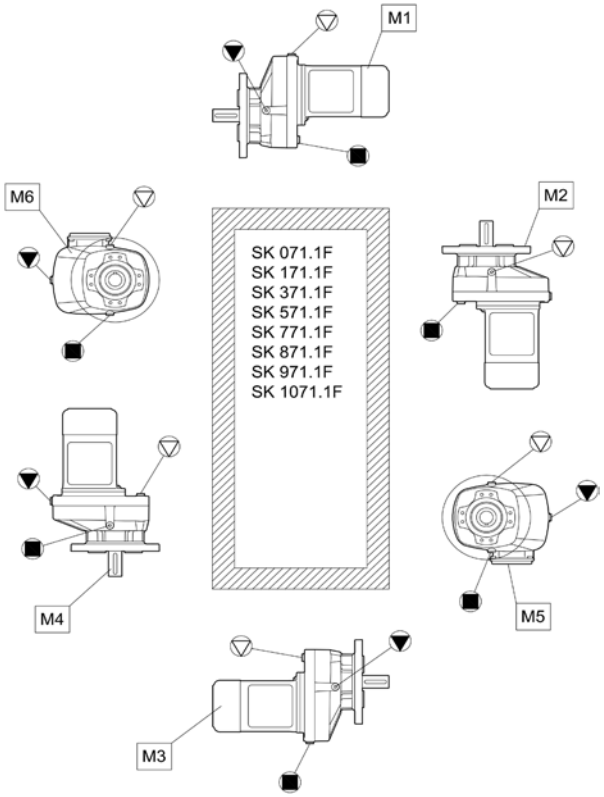

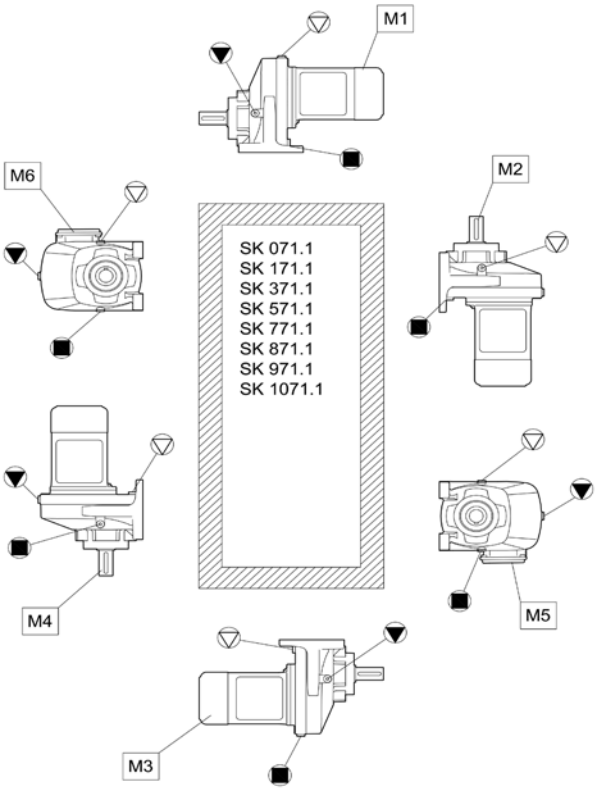

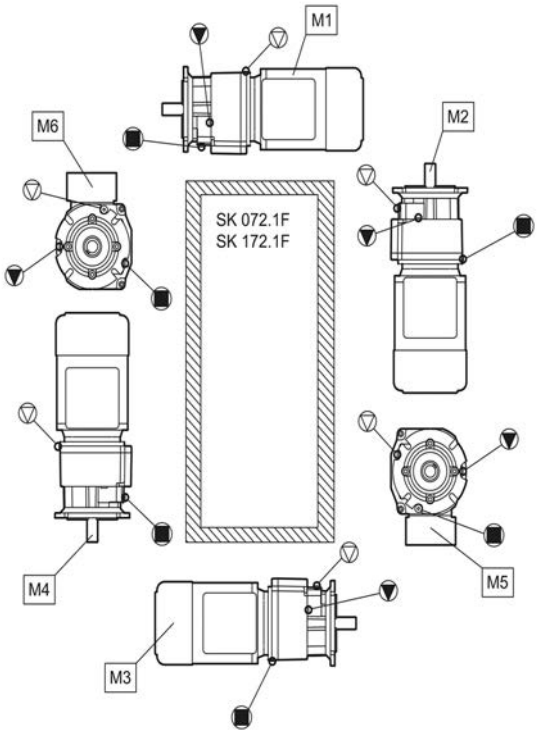

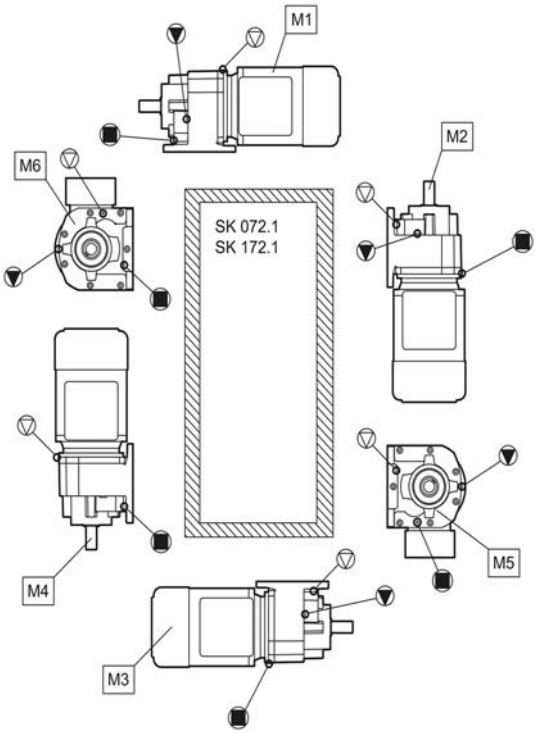

Send Quote Requests to info@automatedpt.com
Call +1(800)985-6929 To Order or Order Online At Nordgearmotors.com

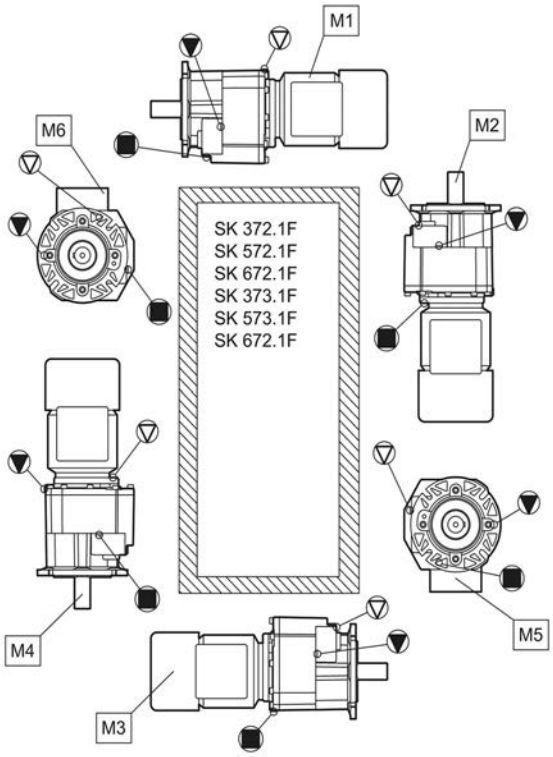
M1
M2
M3
M4
M5
M6
SK 372.1F
SK 572.1F
SK 672.1F
SK 373.1F
SK 573.1F
SK 672.1F

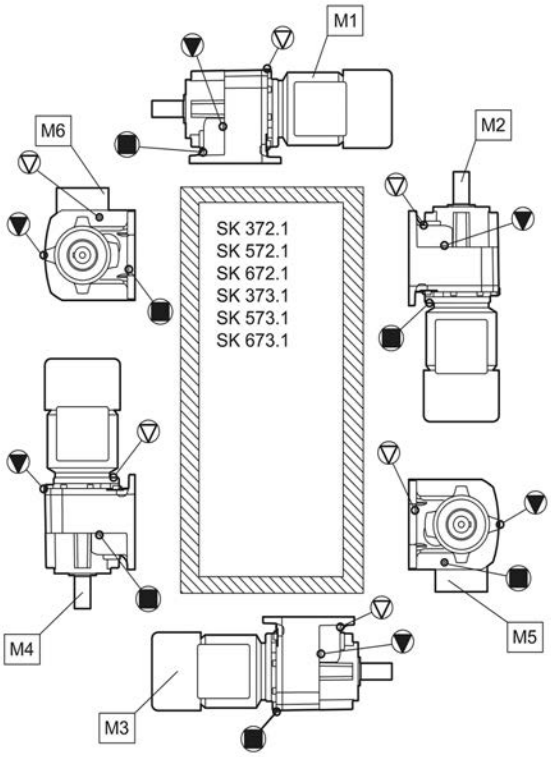
M1
M2
M3
M4
M5
M6
SK 372.1
SK 572.1
SK 672.1
SK 373.1
SK 573.1
SK 673.1

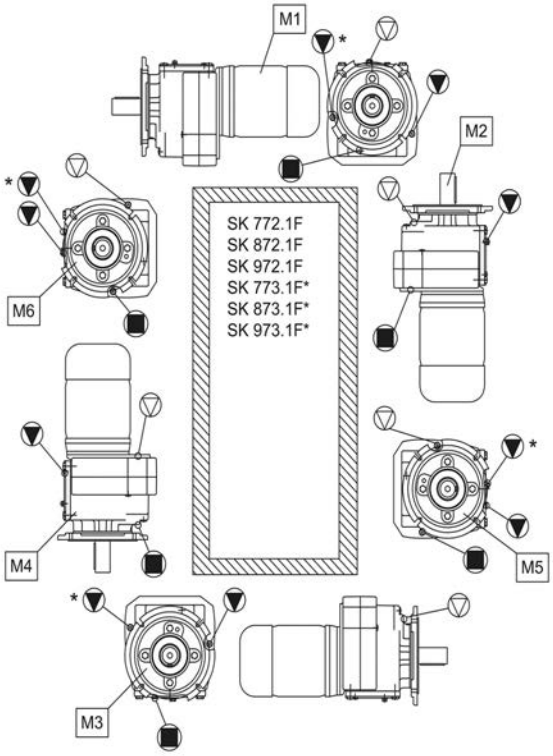
M1
M2
M3
M4
M5
M6
SK 772.1F
SK 872.1F
SK 972.1F
SK 773.1F*
SK 873.1F*
SK 973.1F*

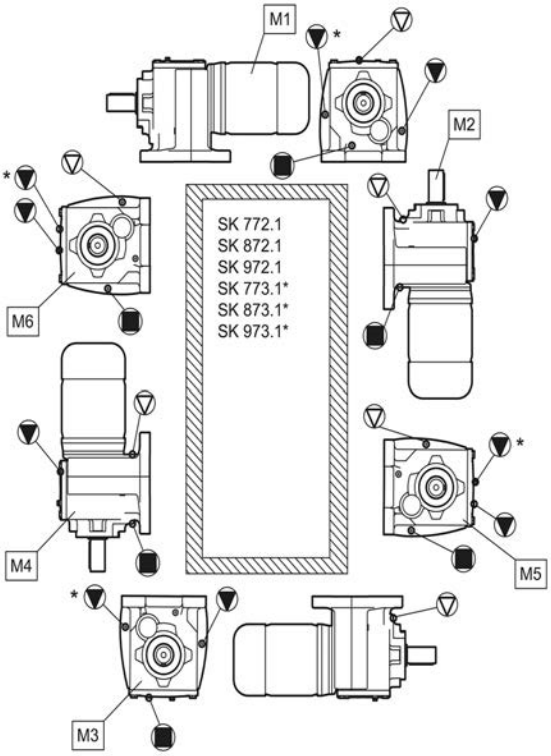
M1
M2
M3
M4
M5
M6
SK 772.1
SK 872.1
SK 972.1
SK 773.1*
SK 873.1*
SK 973.1*

Send Quote Requests to info@automatedpt.com Call +1(800)985-6929 To Order or Order Online At Nordgearmotors.com

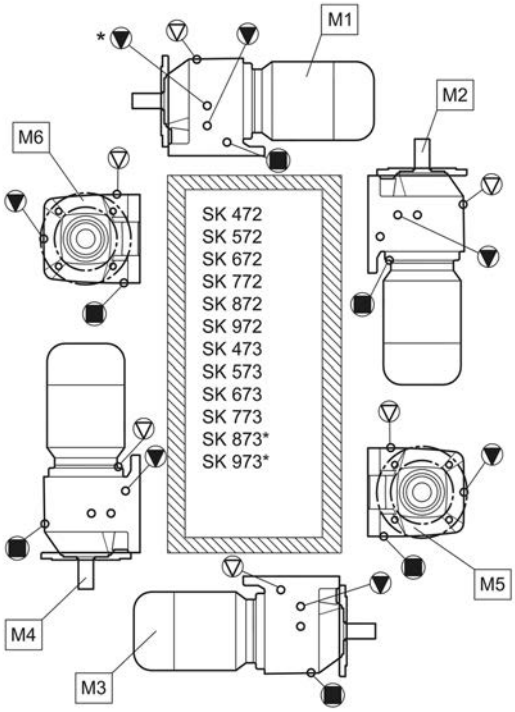

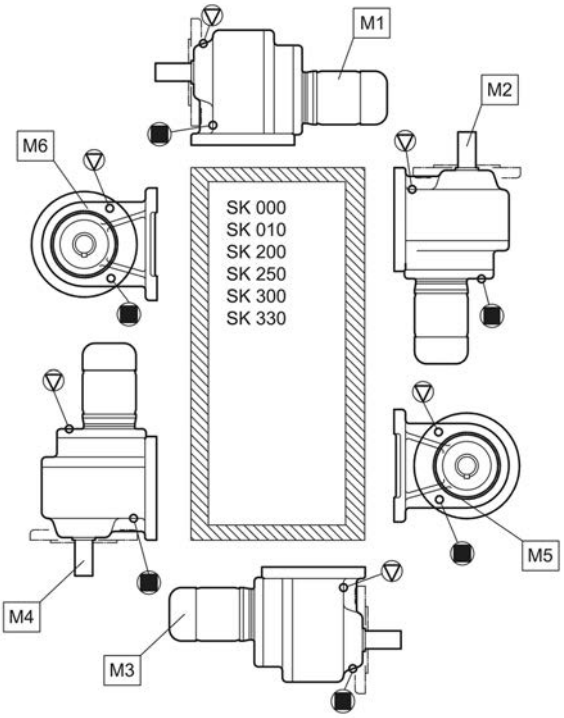

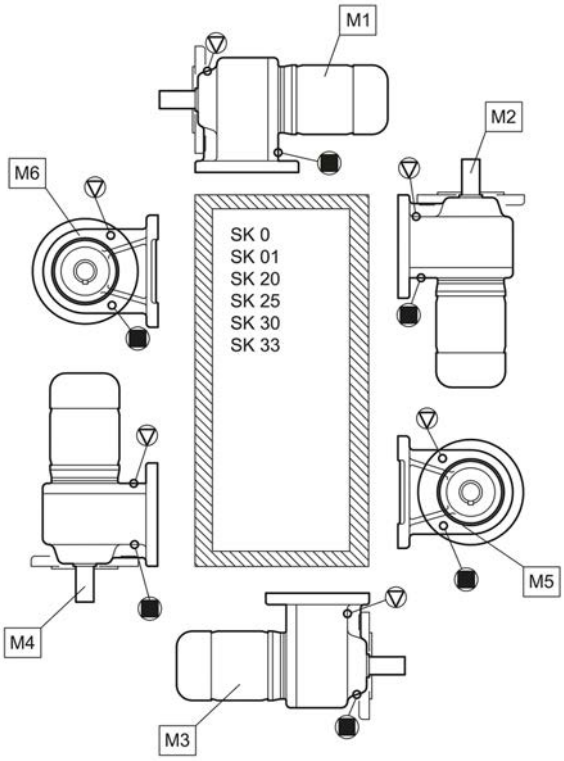

Send Quote Requests to info@automatedpt.com
Call +1(800)985-6929 To Order or Order Online At Nordgearmotors.com

Send Quote Requests to info@automatedpt.com Call +1(800)985-6929 To Order or Order Online At Nordgearmotors.com

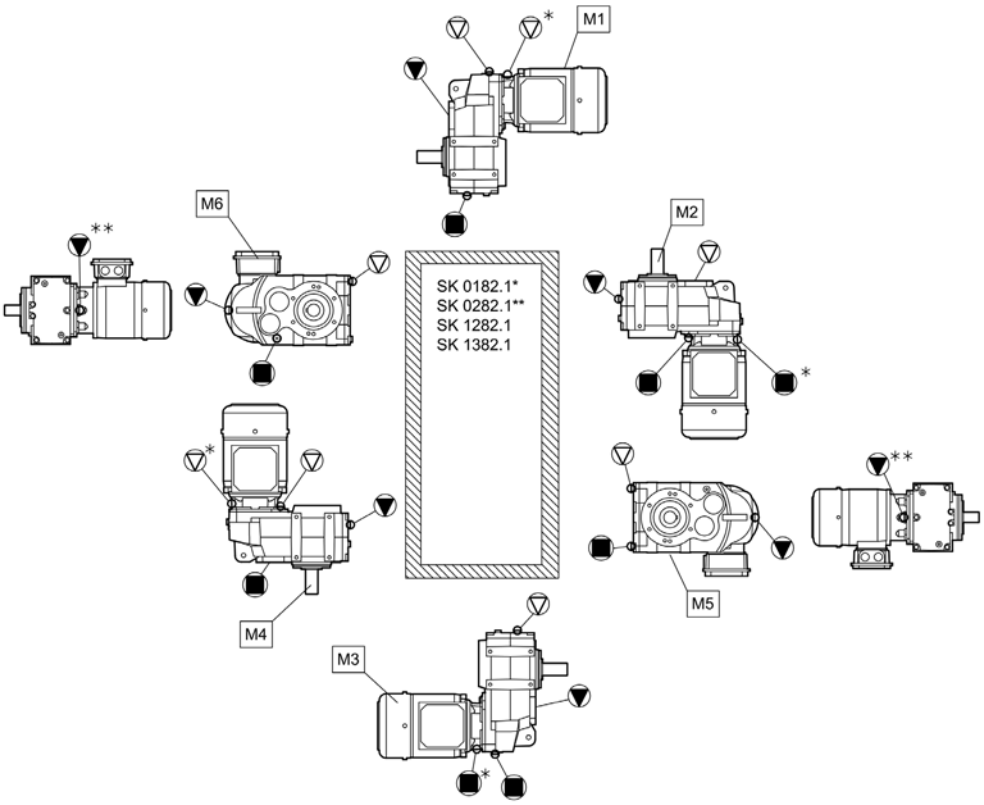

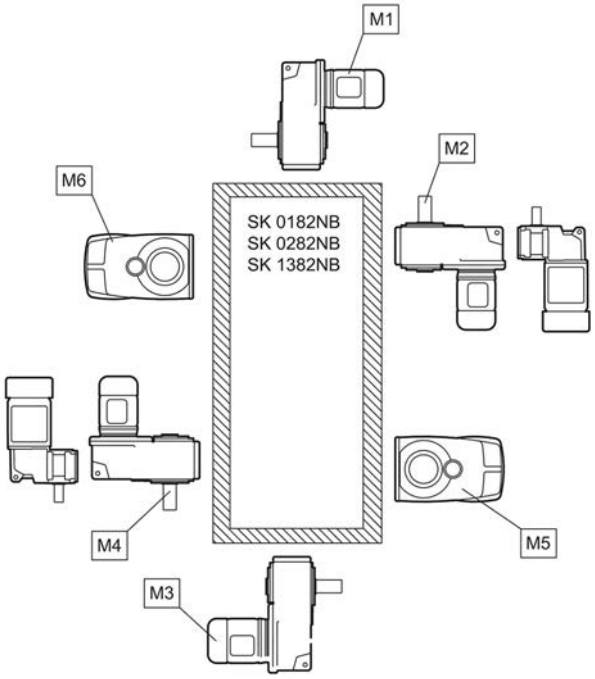

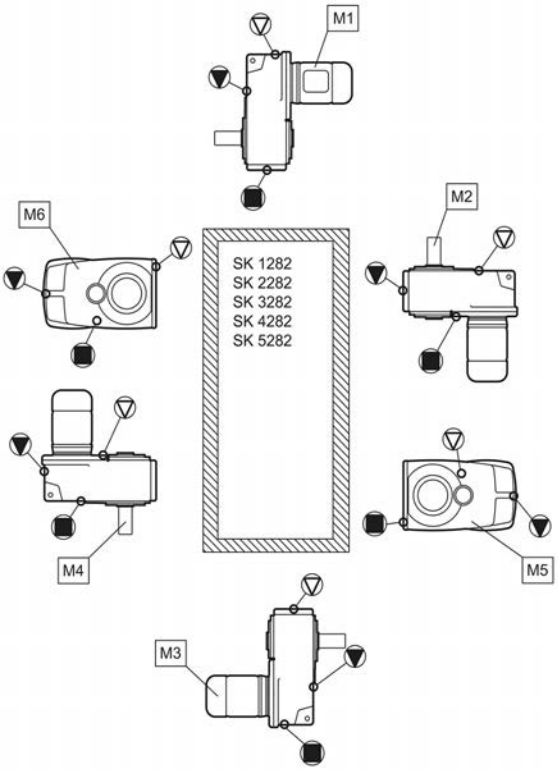

Send Quote Requests to info@automatedpt.com
Call +1(800)985-6929 To Order or Order Online At Nordgearmotors.com

Send Quote Requests to info@automatedpt.com Call +1(800)985-6929 To Order or Order Online At Nordgearmotors.com

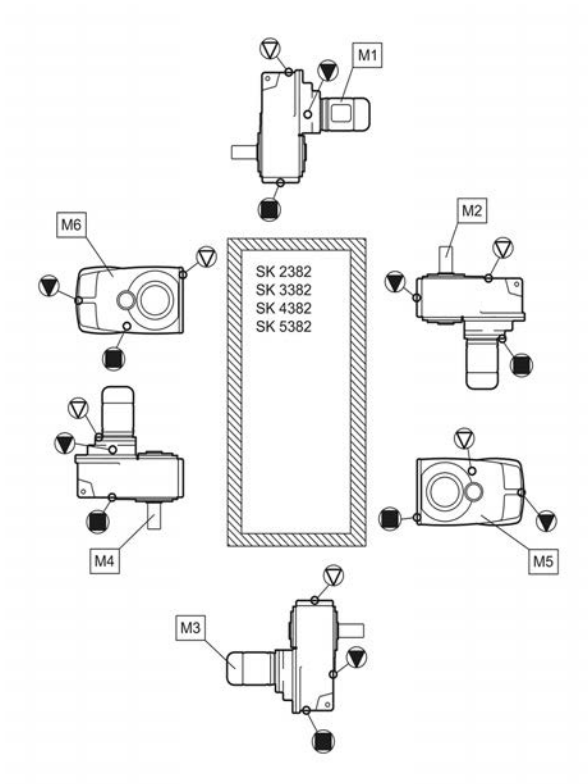

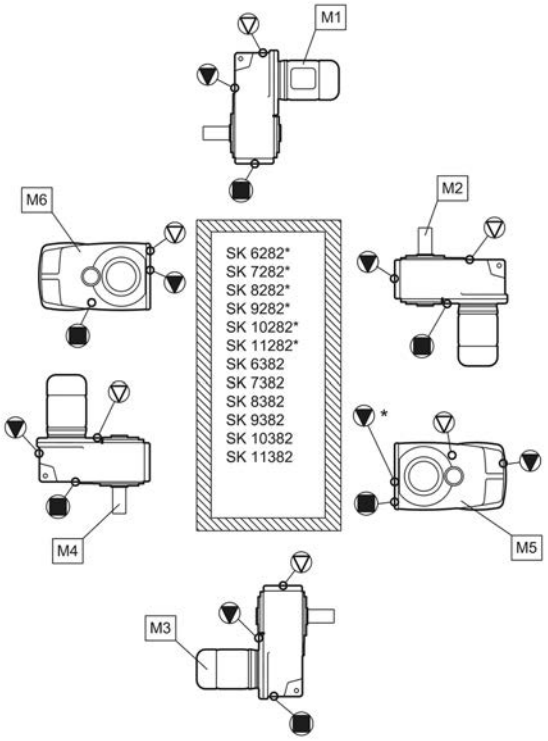

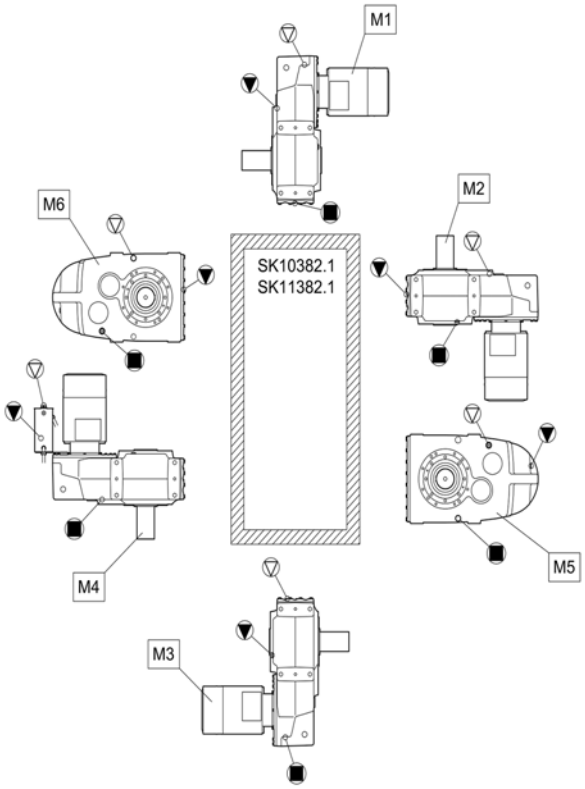

Send Quote Requests to info@automatedpt.com
Call +1(800)985-6929 To Order or Order Online At Nordgearmotors.com

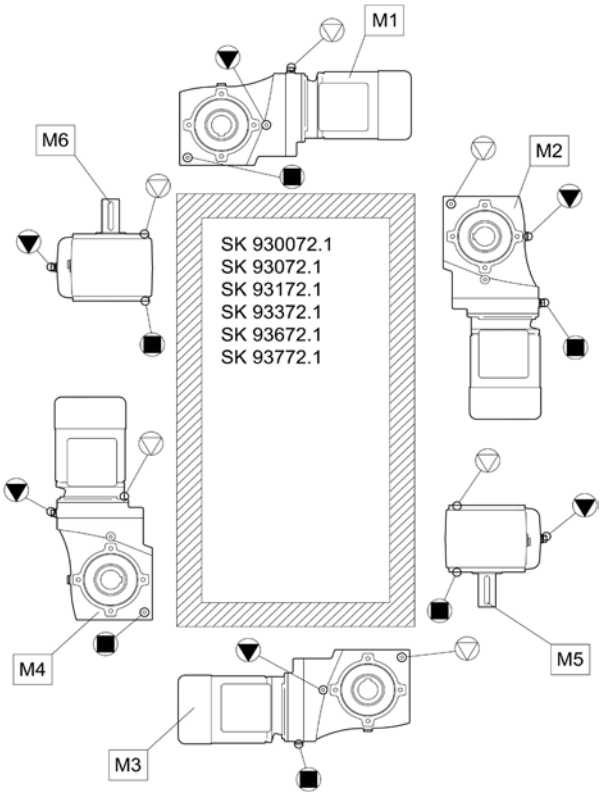
M1
M2
M3
M4
M5
M6
SK 930072.1
SK 93072.1
SK 93172.1
SK 93372.1
SK 93672.1
SK 93772.1

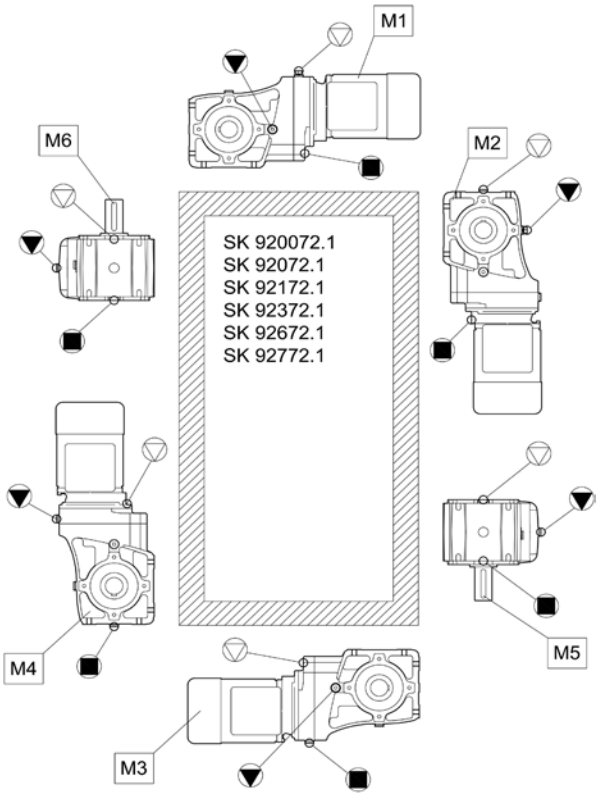
M1
M2
M3
M4
M5
M6
SK 920072.1
SK 92072.1
SK 92172.1
SK 92372.1
SK 92672.1
SK 92772.1

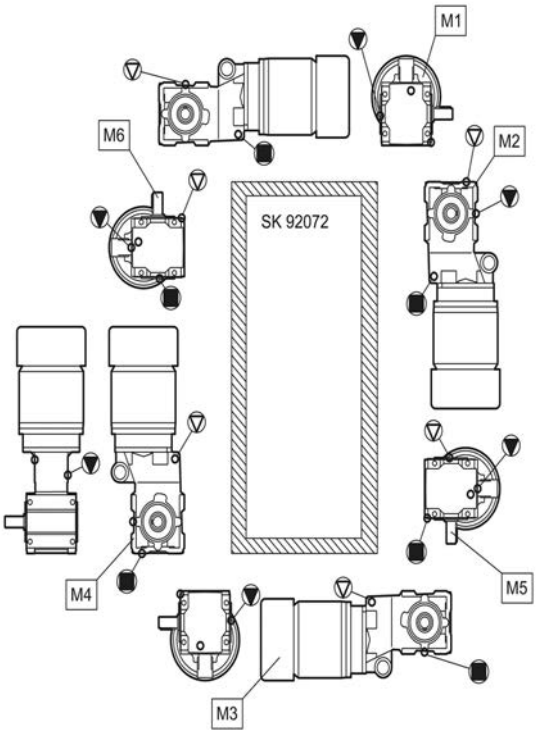
M1
M2
M3
M4
M5
M6
SK 92072

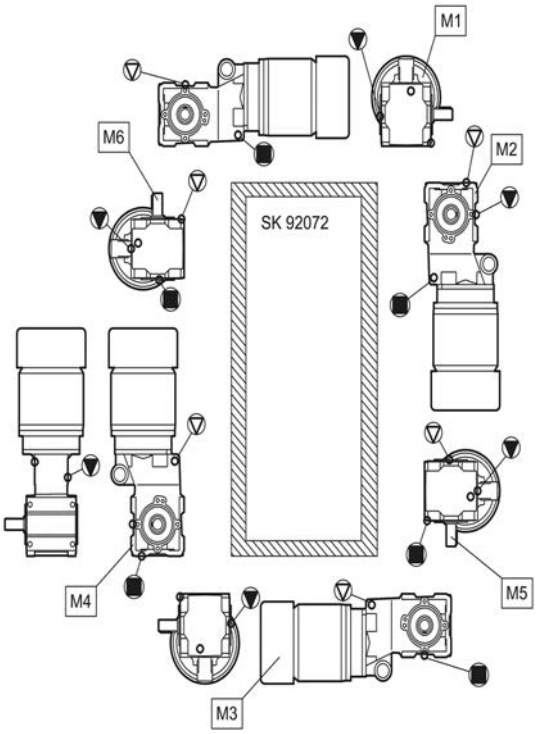
M1
M2
M3
M4
M5
M6
SK 92072

Send Quote Requests to info@automatedpt.com Call +1(800)985-6929 To Order or Order Online At Nordgearmotors.com

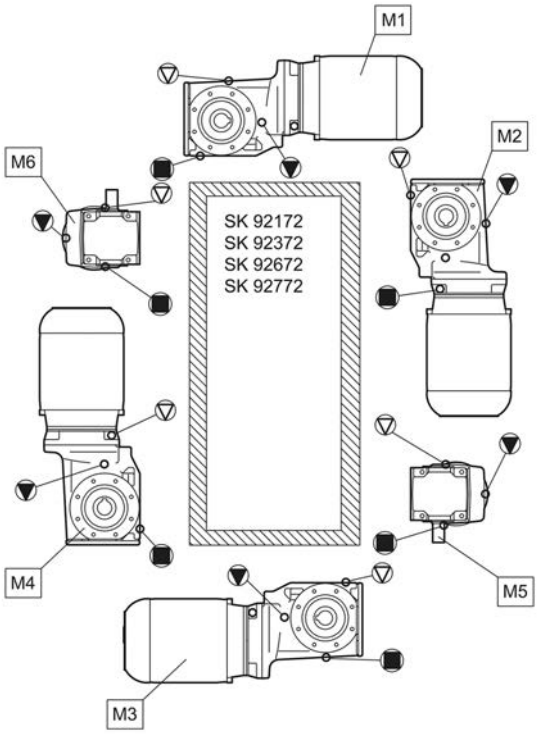

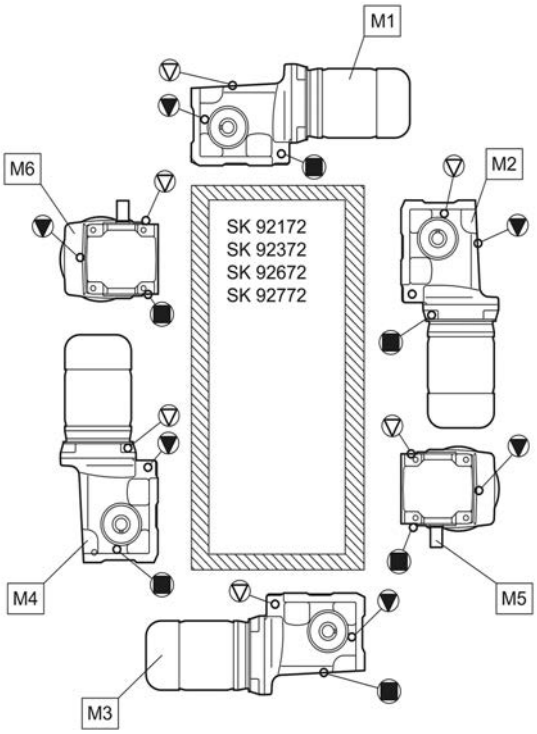

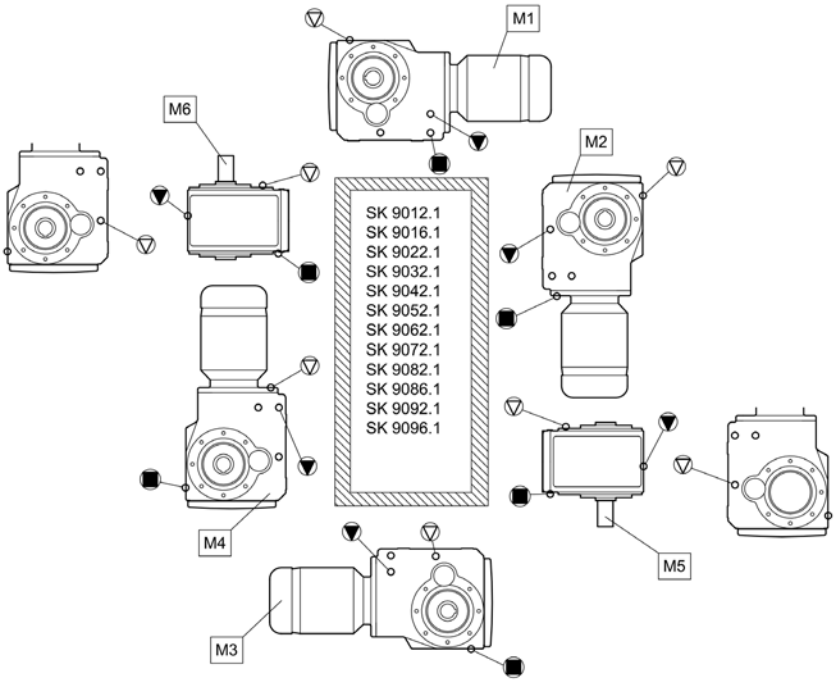

Send Quote Requests to info@automatedpt.com
Call +1(800)985-6929 To Order or Order Online At Nordgearmotors.com

Send Quote Requests to info@automatedpt.com Call +1(800)985-6929 To Order or Order Online At Nordgearmotors.com

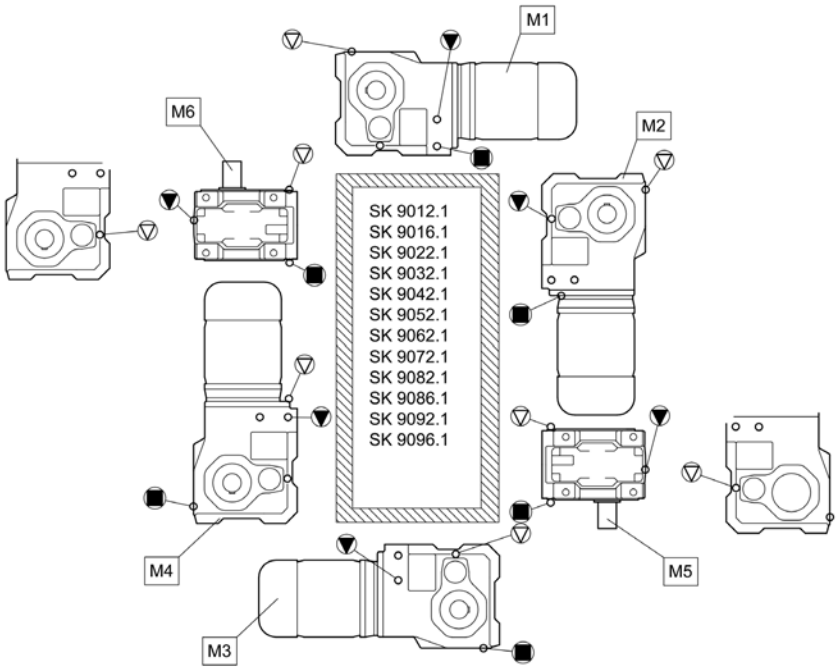

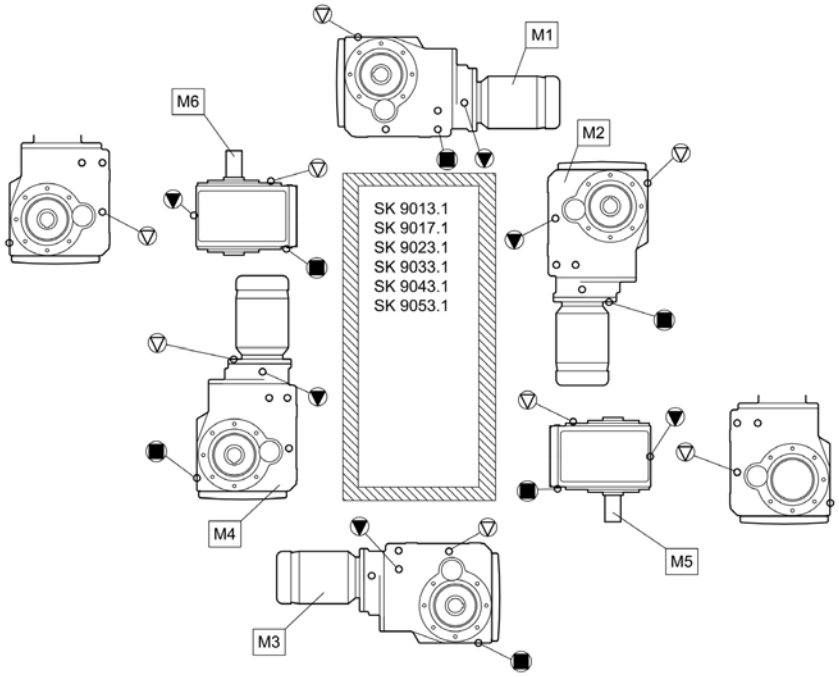

Send Quote Requests to info@automatedpt.com
Call +1(800)985-6929 To Order or Order Online At Nordgearmotors.com

Send Quote Requests to info@automatedpt.com Call +1(800)985-6929 To Order or Order Online At Nordgearmotors.com

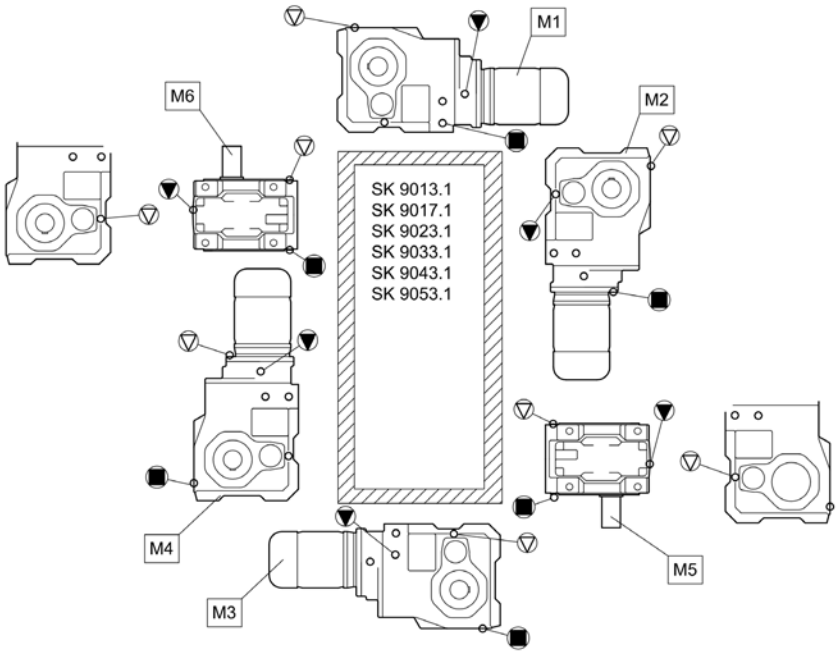

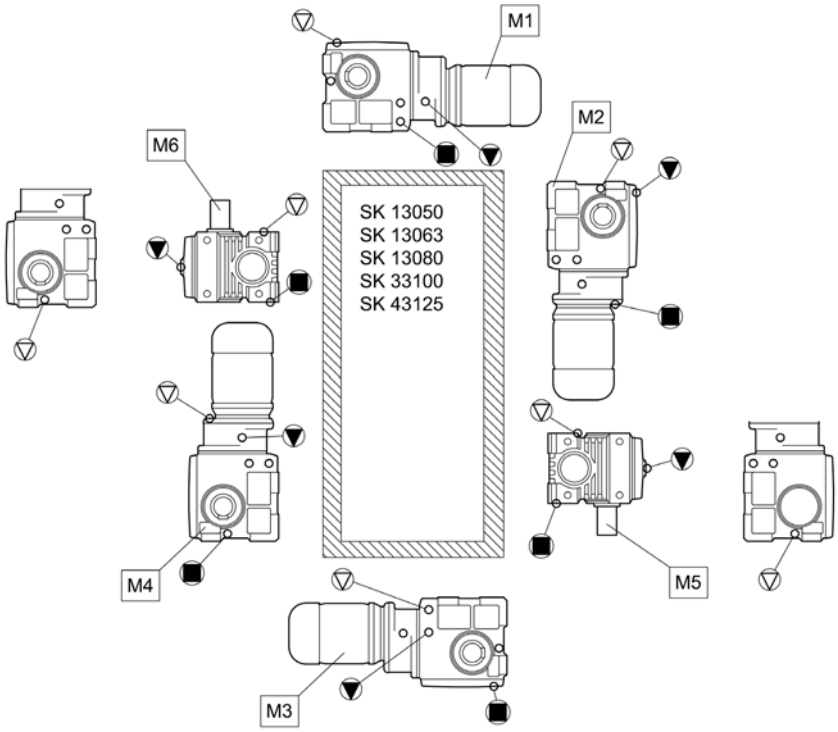

Send Quote Requests to info@automatedpt.com
Call +1(800)985-6929 To Order or Order Online At Nordgearmotors.com

Send Quote Requests to info@automatedpt.com Call +1(800)985-6929 To Order or Order Online At Nordgearmotors.com

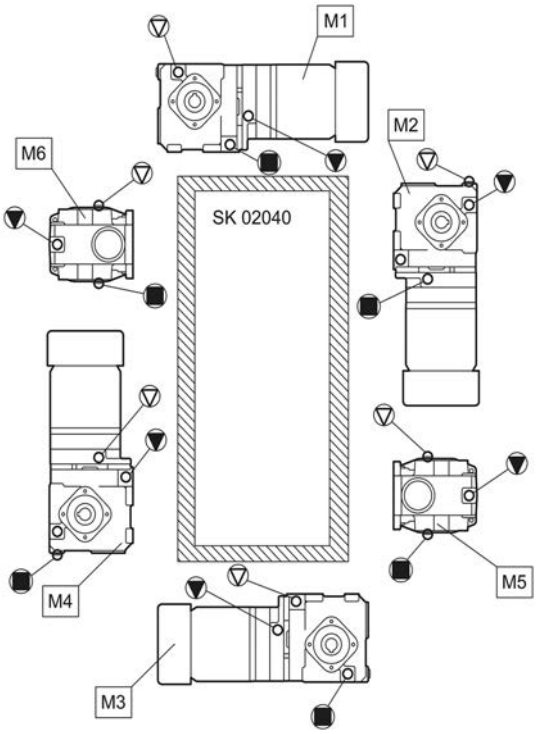

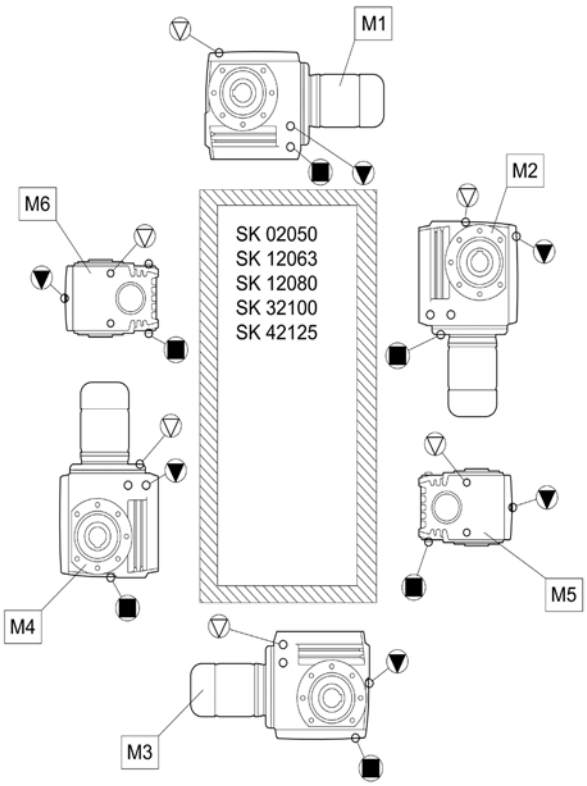

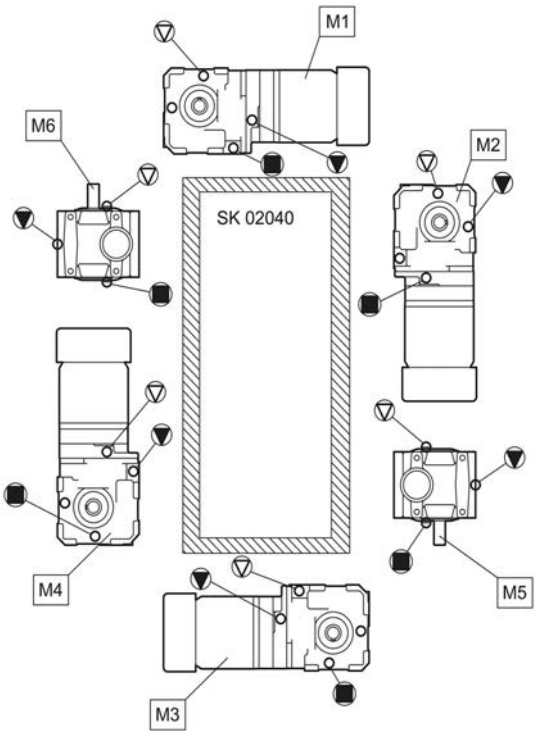

Send Quote Requests to info@automatedpt.com
Call +1(800)985-6929 To Order or Order Online At Nordgearmotors.com

Send Quote Requests to info@automatedpt.com Call +1(800)985-6929 To Order or Order Online At Nordgearmotors.com

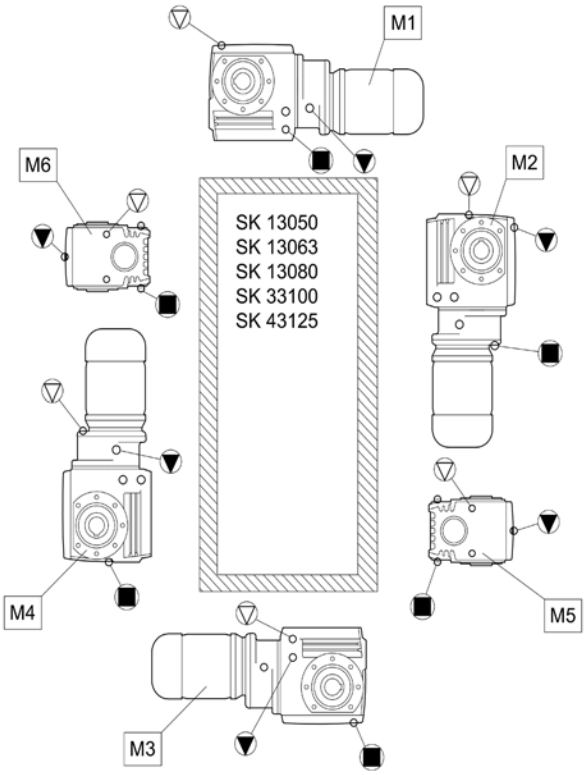

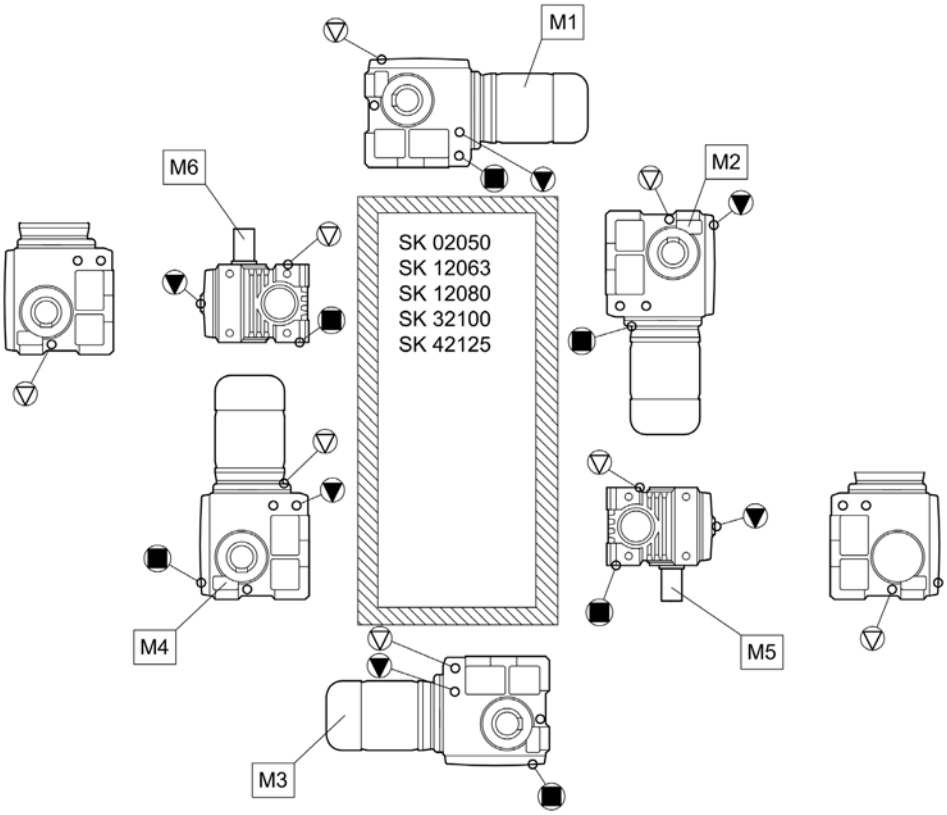

Send Quote Requests to info@automatedpt.com
Call +1(800)985-6929 To Order or Order Online At Nordgearmotors.com

Send Quote Requests to info@automatedpt.com Call +1(800)985-6929 To Order or Order Online At Nordgearmotors.com

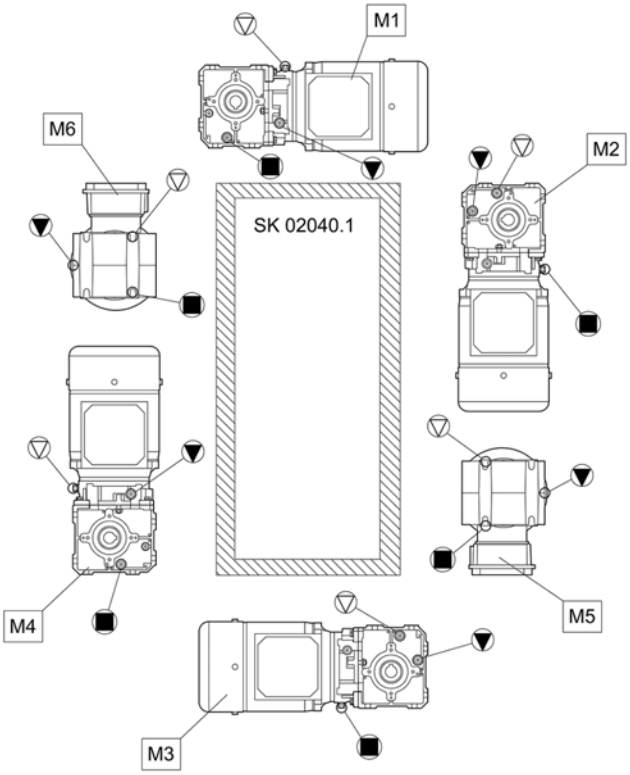

Send Quote Requests to info@automatedpt.com
Call +1(800)985-6929 To Order or Order Online At Nordgearmotors.com

Send Quote Requests to info@automatedpt.com Call +1(800)985-6929 To Order or Order Online At Nordgearmotors.com

7.2 Lubricants

With the exception of types SK 11382.1, SK 12382 and SK 9096.1, the gear units are filled with lubricant for the required mounting position and are ready for operation as delivered. The initial filling corresponds to a lubricant from the column for the ambient temperatures (standard version) in the lubricant table.

7.2.1 Roller bearing greases

This table contains comparable approved roller bearing greases from various manufacturers. The manufacturer can be changed within a lubricant type. Observe the ambient temperature range.

Mixing different greases is not permissible. When changing the grease, different greases of one lubricant type within the relevant ambient temperature range may be mixed in a maximum ratio of 1/20 (5%).

When changing the lubricant type or the ambient temperature range, please consult Getriebebau NORD. Otherwise, no warranty can be accepted for the function of the gear units.

Lubricant type	**Ambient temperature**	Castrol	KLÜBER LUBRICATION	Mobil	
Grease (mineral oil)	-30…60 °C	Spheerol EPL 2	-	Mobilux EP 2	Gadus S2 V220 2
Grease (PAO)	-25…80 °C	-	PETAMO GHY 133 N	-	-

Table 12: Roller bearing greases

Send Quote Requests to info@automatedpt.com
Call +1(800)985-6929 To Order or Order Online At Nordgearmotors.com

Send Quote Requests to info@automatedpt.com Call +1(800)985-6929 To Order or Order Online At Nordgearmotors.com

7.2.2 Gear oils

This table shows comparable approved lubricants from various manufacturers. The oil manufacturer can be changed within a viscosity and lubricant type. Only change the lubricant type or the viscosity after consultation with Getriebebau NORD.

Mixing different oils is not permissible. When changing the gear oil, different oils of one lubricant type with the same viscosity may be mixed in a maximum ratio of 1/20 (5%).

Lubricant type	Details on name plate	DIN (ISO) / Ambient temperature	Castrol	FUCHS	KLÜBER LUBRICATION	Mobil	
Mineral oil	CLP 680	ISO VG 680 0...40 °C	-	-	-	Mobilgear 600 XP 680	Omala S2 GX 680
	CLP 220	ISO VG 220 -10…40 °C	Alpha EP 220 Alpha SP 220	Renolin CLP 220 Renolin CLP 220 VCI	Klüberoil GEM 1-220 N	Mobilgear 600 XP 220	-
	CLP 100	ISO VG 100 -15…25 °C	-	-	Klüberoil GEM 1-100 N	-	-
Synthetic oil (Polyglycol)	CLP PG 680	ISO VG 680 -20...40 °C	-	-	Klübersynth GH 6-680	-	-
	CLP PG 460	ISO VG 460 -25…80 °C	-	-	Klübersynth GH 6-460	-	-
	CLP PG 220	ISO VG 220 -25…80 °C	Optigear Synthetic 1300/220	Renolin PG 220	Klübersynth GH 6-220	-	-
Synthetic oil (hydrocarbons)	CLP HC 460	ISO VG 680 -30…80 °C	-	-	Klübersynth GEM 4-680	Mobil SHC 636	-
	CLP HC 460	ISO VG 460 -30…80 °C	-	-	-	Mobil SHC 634	-
	CLP HC 220	ISO VG 220 -40…80 °C	Alphasyn EP 220	Renolin UNISYSN XT 220 Renolin Unisyn CLP 220 Renolin Unisyn Gear 220 VCI	Klübersynth GEM 4-220 N Klübersynth MEG 4-220	Mobil SHC 630 Mobil SHC Gear 630	Omala S4 GX 220
Bio-degradable oil	CLP E 680	ISO VG 680 -5…40 °C	-	Plantogear 680 S	-	-	-
	CLP E 220	ISO VG 220 -5…40 °C	-	Plantogear 220 S	-	-	-
Food grade oil	CLP PG H1 680	ISO VG 680 -5…40 °C	-	-	Klübersynth UH1 6-680	-	-
	CLP PG H1 220	ISO VG 220 -25…40 °C	-	Cassida Fluid WG 220	Klübersynth UH1 6-220	-	-
	CLP HC H1 220	ISO VG 220 -25…40 °C	-	-	-	Mobil SHC Cibus 220	-
Gear unit – fluid grease based on mineral oil	GP 00 K-30	-25…60 °C	Tribol GR 100-00 PD Spheerol EPL 00	-	-	-	-

Table 13: Gear oils

The required lubricant quantity and the lubricant type are stated on the name plate. The filling quantities stated in the catalogue G1000 are guide values. The precise quantities vary depending on the exact

Send Quote Requests to info@automatedpt.com
Call +1(800)985-6929 To Order or Order Online At Nordgearmotors.com

Send Quote Requests to info@automatedpt.com Call +1(800)985-6929 To Order or Order Online At Nordgearmotors.com

gear ratio and options OSG and OT, if available. When filling, always observe the oil level screw hole as an indicator of the precise quantity of oil.

After changing the lubricant, and in particular after the initial filling, the oil level may change during the first few hours of operation, as the oil galleries and the hollow spaces only fill gradually during operation. The oil level is still within the permissible tolerance.

If the gear unit contains an oil inspection glass, we recommend an adjustment of the oil level after an operating time of approximately 2 hours, so that the oil level is visible in the oil inspection glass when the gear unit is at a standstill and has cooled down. An oil level check via the oil inspection glass is only possible after this time.

Gear unit types SK 11282, SK 11382, SK 11382.1, SK 12382 and SK 9096.1 are usually supplied without oil.

7.3 Screw tightening torques

Screw tightening torques [Nm]							
Dimensions	Screw fastenings in strength classes				Cap screws	Threaded pin on coupling	Screw fastenings on covers
	8.8	10.9	12.9	V2A-70 V4A-70			
M4	3.2	5	6	2.8	-	-	-
M5	6.4	9	11	5.8	-	2	-
M6	11	16	19	10	-	-	6.4
M8	27	39	46	24	11	10	11
M10	53	78	91	48	11	17	27
M12	92	135	155	83	27	40	53
M16	230	335	390	207	35	-	92
M20	460	660	770	414	-	-	230
M24	790	1150	1300	711	80	-	460
M30	1600	2250	2650	1400	170	-	-
M36	2780	3910	4710	2500	-	-	1600
M42	4470	6290	7540	4025	-	-	-
M48	6140	8640	16610	5525	-	-	-
M56	9840	13850	24130	8860	-	-	-
G½	-	-	-	-	75	-	-
G¾	-	-	-	-	110	-	-
G1	-	-	-	-	190	-	-
G1¼	-	-	-	-	240	-	-
G1½	-	-	-	-	300	-	-

Table 14: Screw tightening torques

Installing hose unions

Oil the thread of the union nut, the cutting ring and the thread of the connecting piece. Tighten the union nut with a spanner until the union nut becomes more difficult to turn. Turn the union nut further by approx. 30° to 60° but only to a maximum of 90° while holding the connecting piece with a spanner. Remove excess oil from the union.

Send Quote Requests to info@automatedpt.com
Call +1(800)985-6929 To Order or Order Online At Nordgearmotors.com

Send Quote Requests to info@automatedpt.com Call +1(800)985-6929 To Order or Order Online At Nordgearmotors.com

7.4 Troubleshooting

NOTICE!

Gear unit damage

- Shut down the gear unit immediately in case of malfunction.

Gear unit malfunctions		
Error	**Possible cause**	**Remedy**
Unusual running noises, vibrations	Oil too low or bearing damage or gear wheel damage	Consult NORD Service department
Oil escaping from gear unit or motor	Defective seal	Consult NORD Service department
Oil escaping from pressure vent	Incorrect oil level	Use oil expansion chamber (Option OA)
	Incorrect, dirty oil	Oil change
	Unfavourable operating conditions	Consult NORD Service department
Gear unit becomes too hot	Unfavourable installation conditions or gear unit damage	Consult NORD Service department
Shock when switching on, vibrations	Motor coupling defective	Replace elastomer ring
	Gear unit fastening loose	Tighten motor and gear unit fastening screws
	Defective rubber element	Replace rubber element
Output shaft does not rotate although motor is running	Breakage in gear unit	Consult NORD Service department
	Motor coupling defective	
	Shrink disc slip	

Table 15: Overview of malfunctions

Send Quote Requests to info@automatedpt.com
Call +1(800)985-6929 To Order or Order Online At Nordgearmotors.com

Send Quote Requests to info@automatedpt.com Call +1(800)985-6929 To Order or Order Online At Nordgearmotors.com

7.5 Leakage and leak-tightness

Gear units are filled with oil or grease to lubricate the moving parts. Seals prevent the escape of lubricants. Full leak-tightness is technically not possible, as a certain film of moisture, for example on the radial shaft seals is normal and advantageous for a long-term sealing effect. In the region of vents, oil moisture may be visible due to the escape of function-related oil mist. In the case of grease-lubricated labyrinth seals such as Taconite sealing systems, the used grease emerges from the sealing gap. This apparent leak is not a fault.

According to the test conditions as per DIN 3761, the leak is determined by the medium to be sealed. In bench tests, it exceeds the function-related moisture on the sealing edge in a defined test period and results in dripping of the medium to be sealed. The measured quantity which is then collected is designated as leakage.

Definition of leakage according to DIN 3761 and its appropriate use					
		Location of leakage			
Term	**Explanation**	**Radial shaft seal**	**In IEC adapter**	**Housing joint**	**Vent**
Sealed	No moisture apparent	No fault present			
Damp	Moisture film locally restricted (not an area)	No fault present			
Wet	Moisture film beyond the extent of the component	No fault present		Check, if repair is necessary	No fault present
Measurable leakage	Recognisable stream, dripping	Repair recommended			
Temporary leakage	Temporary malfunction of the sealing system or oil leak due to transport *)	No fault present		Check, if repair is necessary	No fault present
Apparent leakage	Apparent leakage, e.g. due to soiling or sealing systems, which can be re-lubricated	No fault present			

Table 16: Definition of leakage according to DIN 3761

*) Previous experience has shown that moist or wet radial shaft seals stop leaking in the further process. Therefore, under no circumstances can replacement be recommended at this stage. The reason for momentary moisture may be e.g. small particles under the sealing lip.

Send Quote Requests to info@automatedpt.com
Call +1(800)985-6929 To Order or Order Online At Nordgearmotors.com

Send Quote Requests to info@automatedpt.com Call +1(800)985-6929 To Order or Order Online At Nordgearmotors.com

7.6 Repair information

For enquiries to our technical and mechanical service department, please have the exact gear unit type and, if applicable, the order number to hand. You can find this information on the name plate.

7.6.1 Repairs

In case of repair, remove all non-original parts from the gear unit or geared motor. No guarantee can be given for any attached parts, such as rotary encoders or external fans.

Send the device to the following address:

Getriebebau NORD GmbH & Co. KG
Serviceabteilung
Getriebebau-Nord-Straße 1
22941 Bargteheide

Information

If possible, state the reason for returning the component/device. Specify a contact person for queries.

This is important in order to keep repair times as short as possible.

7.6.2 Internet information

In addition, you will find the manuals in the available languages on our website: www.nord.com.

7.7 Warranty

NORD GmbH & Co. KG accepts no liability for damage to persons, materials or assets as a result of failure to observe this operating manual, operating errors or incorrect use. General wearing parts, e.g. radial seals are excluded from the warranty.

Send Quote Requests to info@automatedpt.com
Call +1(800)985-6929 To Order or Order Online At Nordgearmotors.com

Send Quote Requests to info@automatedpt.com Call +1(800)985-6929 To Order or Order Online At Nordgearmotors.com

7.8 Abbreviations

2D	Dust explosion-proof gear units, Zone 21
2G	Gas explosion-proof gear units, Zone 1
3D	Dust explosion-proof gear units, Zone 22
ATEX	**AT**mosphrères **EX**plosible
B5	Flange fastening with through holes
B14	Flange fastening with threaded holes
CLP	Mineral oil
CLP HC	Synthetic polyalphaolefin oil
CLP PG	Synthetic polyglycol oil
cSt	Centistokes
CW	Clockwise, right rotation
CCW	Counter-clockwise, left rotation
°dH	Water hardness in German hardness degrees 1 dH = 0.1783 mmol/l
DIN	Deutsches Institut für Normung [*German Institute for Standardisation*]
E	Ester oil
EC	European Community
EN	European standard
F_R	Radial force
F_A	Axial force
H1	Lubricant for the food industry
IE1	Standard efficiency motors
IE2	High efficiency motors
IEC	International Electrotechnical Commission
NEMA	National Electrical Manufacturers Association
IP55	International protection
ISO	International standardisation organisation
pH	pH value
PPE	Personal Protective Equipment
DIR	Directive
UKCA	UK Conformity Assessed
VCI	Volatile Corrosion Inhibitor
VG	Viscosity group
WN	Document from Getriebebau NORD

Send Quote Requests to info@automatedpt.com
Call +1(800)985-6929 To Order or Order Online At Nordgearmotors.com

Send Quote Requests to info@automatedpt.com Call +1(800)985-6929 To Order or Order Online At Nordgearmotors.com

Key word index

A

Activating the vent 40
Address.....75

C

Change the oil 51
Check the hose.....49
Checking the oil level.....48
Cooling coil 43
Cooling system 36
Covers 30

D

Disposal of materials 53

E

Electric motor.....39
Electrical connection.....39

F

Fault.....73

G

Gear unit types 14
General overhaul 52
GRIPMAXX™ 28

H

H66 option 23
Hollow shaft with GRIPMAXX™ (Option M)..28
Hose union 72

I

Installation.....19
Intended use 11
Internet.....75
Introduction of forces 21

L

Leakage 74
Long-term storage 18
Lubricant dispenser 41, 50
Lubricant quantities 70
Lubricants 70

M

Maintenance 75
Maintenance intervals 46
Maintenance work
- Check for running noises 47
- Checking the oil level 48
- Leaks 47
- Lubricant dispenser 50
- Oil change 51
- Radial shaft seal 51
- Re-greasing VL2, VL3, W and AI/AN 49
- Vent screw..... 51
- Visual inspection 47

Motor 39

N

Name plate..... 16
nsd tupH..... 19

O

Oil level 40
Option M 28
Options..... 15

P

Pulling device 21
Push-on gear unit..... 23

R

Radial shaft seal 51
Re-grease the bearings 52
Re-greasing 49
Repairs..... 75
Roller bearing greases..... 70
Running noises 47
Running-in time..... 44

S

Safety information 11
Service 75

Send Quote Requests to info@automatedpt.com
Call +1(800)985-6929 To Order or Order Online At Nordgearmotors.com

Send Quote Requests to info@automatedpt.com Call +1(800)985-6929 To Order or Order Online At Nordgearmotors.com

Service intervals 46
Shrink disc 26, 28
Standard motor 33
Surface treatment
nsd tupH 19

T

Tightening torques 72
Transport 12, 17

V

Vent 40
Vent screw 51
Visual inspection 47
Visual inspection of hose 49

Send Quote Requests to info@automatedpt.com
Call +1(800)985-6929 To Order or Order Online At Nordgearmotors.com

Send Quote Requests to info@automatedpt.com Call +1(800)985-6929 To Order or Order Online At Nordgearmotors.com

Send Quote Requests to info@automatedpt.com
Call +1(800)985-6929 To Order or Order Online At Nordgearmotors.com

Send Quote Requests to info@automatedpt.com Call +1(800)985-6929 To Order or Order Online At Nordgearmotors.com

Headquarters
Getriebebau NORD GmbH & Co. KG
Getriebebau-Nord-Str. 1
22941 Bargteheide, Deutschland
T: +49 45 32 / 289 0
F: +49 45 32 / 289 22 53
info@nord.com

6052802 / 3023

Send Quote Requests to info@automatedpt.com
Call +1(800)985-6929 To Order or Order Online At Nordgearmotors.com