Send Quote Requests to info@automatedpt.com
Call +1(800)985-6929 To Order or Order Online At Nordgearmotors.com

CONSTANT SPEED DRIVES



SAFE • RELIABLE • EFFICIENT

UNICASE™

NORD® DRIVESYSTEMS

Send Quote Requests to info@automatedpt.com
Call +1(800)985-6929 To Order or Order Online At Nordgearmotors.com

DEPENDABLE & ACCESSIBLE

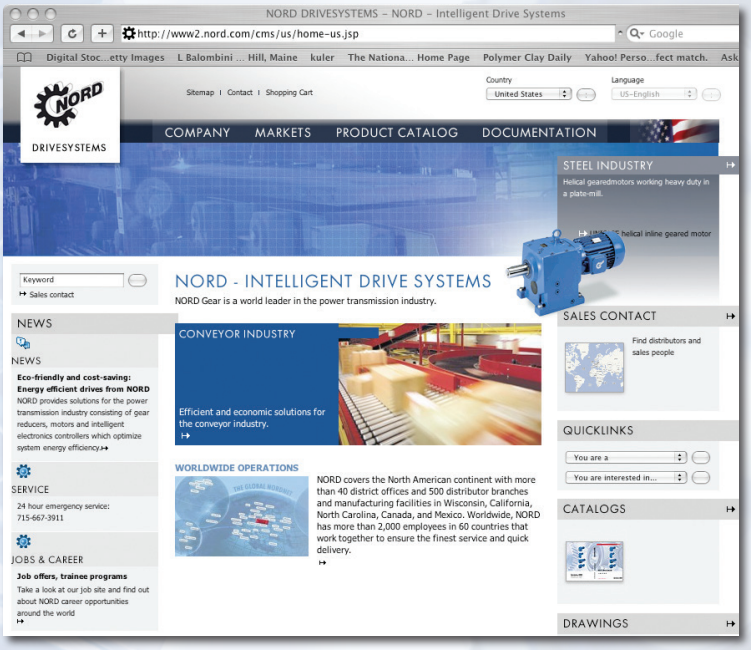

Online Tools

NORD offers comprehensive, searchable product information online. The Internet makes it possible for our customers to reach us anytime, anywhere — 365 days a year, 24 hours a day.

- Online order tracking
- Parts list and maintenance schedules
- Online drive selection software
- DXF scale drawing

Quality

Quality is assured at NORD assembly and manufacturing facilities, based on ISO 9000 standards — from careful inspection of incoming materials to closely monitored machining operations including gear cutting, turning, hardening and grinding as well as finishing and assembly.

Global Availability

From Shanghai to Charlotte, and all points between, NORD reaches customers around the world. Deliveries, service, and product support are close at hand, regardless of your location.

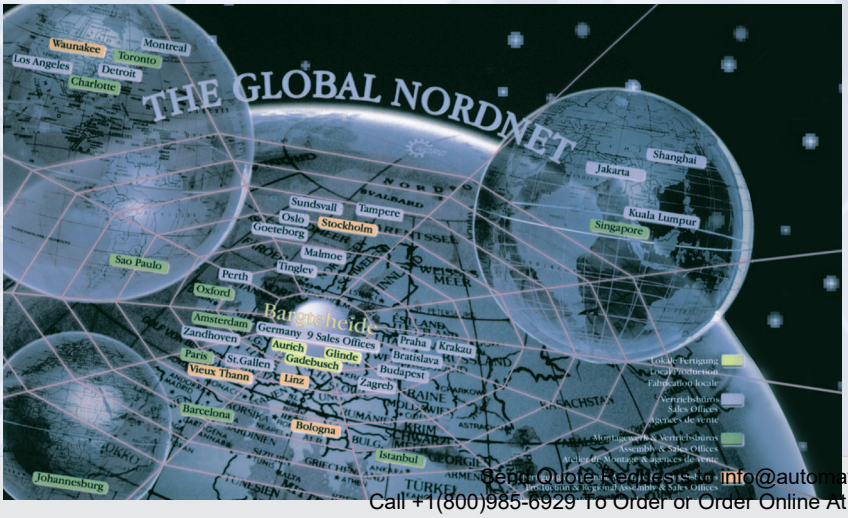

NORD 911

Trouble? Just call **715-NORD-911** (in Canada, 905-796-3606). Emergency service is available 24 hours a day, 7 days a week. We'll answer your call, ship the parts, or build a unit and have it shipped directly to you to provide what you need, when you need it.

Send Quote Requests to info@automatedpt.com Call +1(800)985-6929 To Order or Order Online At Nordgearmotors.com

Table of Contents

	A	Introduction	4
	B	Helical In-line	85
	C	Clincher™ Shaft Mount	241
	D	Right-angle Helical-bevel	395
	E	Right-angle Helical-worm	575
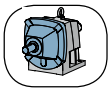	F	Inputs	674
	G	Motors	689
	H	Service	749
	I	Products & Key Features	787
	J	Contacts	801

DRIVESYSTEMS

www.nord.com



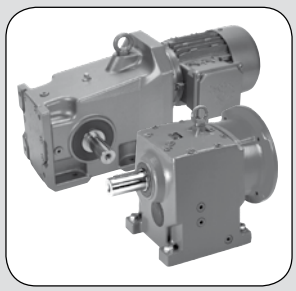



Send Quote Requests to info@automatedpt.com
Call +1(800)985-6929 To Order or Order Online At Nordgearmotors.com

Send Quote Requests to info@automatedpt.com Call +1(800)985-6929 To Order or Order Online At Nordgearmotors.com

Table of Contents

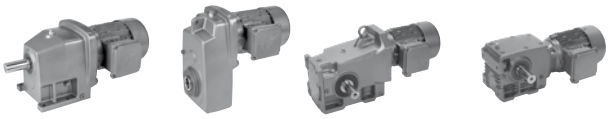

A Introduction 4
Company Information **4**
Ordering Guides 6
Helical In-line 6
Clincher™ 7
Helical-bevel 8
Helical-worm 9
Motors & Brakemotors 10
Selection 11
General Warnings & Cautions 13
Thermal Considerations 14
Inquiry Form 15
Mounting Positions 16
Options 19
Lubrication 36
Lubrication Types 42
Oil Fill Quantities 44
Overhung Load & Thrust Load 52
Tolerances 60
Service Factoring 62
Shrink Discs 72
Weights 76
B Helical In-line 85
In-line Helical Gearmotor Selection 85
In-line Helical Reducer Selections & Combinations 88
In-line Helical Dimensions 151
In-line Helical Alternate Shaft Options 239
C Clincher™ Shaft Mount 241
Clincher™ Shaft Mount Gearmotor Selection 244
Clincher™ Shaft Mount Reducer Selections & Combinations 289
Clincher™ Shaft Mount Dimensions 311
Clincher™ Shaft Mount Alternate Shaft Options 388
D Right-angle Helical-bevel 395
Right-angle Helical-bevel Gearmotor Selection 398
Right-angle Helical-bevel Reducer Selections & Combinations 447
Right-angle Helical-bevel Dimensions 463
Right-angle Helical-bevel Alternate Shaft Options 566

Send Quote Requests to info@automatedpt.com
Call +1(800)985-6929 To Order or Order Online At Nordgearmotors.com

Send Quote Requests to info@automatedpt.com Call +1(800)985-6929 To Order or Order Online At Nordgearmotors.com



Table of Contents

E Right-angle Helical-worm 575
- Right-angle Helical-worm Gearmotor Selection 578
- Right-angle Helical-worm Reducer Selections & Combinations 597
- Right-angle Helical-worm Dimensions 621
- Right-angle Helical-worm Alternate Shaft Options 669

F Inputs 673
- Solid Input Shaft 675
- NEMA C-Face 676
- IEC Metric Motor Adapters 676
- Square Flange Servo Motor Adapters 678
- Top Mount Motor Platform 679
- Scoop Motor Platform 682
- Solid Input Shafts with Input Flange 684

G Motors 689
- Order Form 10
- C-Face Motors 691
- Standard Design 692
- Options 697
- Motor Mounted Inverter Trio SK300E 705
- Performance Data 712
- Connection Diagrams 719
- Dimensions 720

Brakes 727
- Torque Selection 730
- Rectifiers 732
- Brake Times & Electrical Selection 734
- Options 737
- Performance Data 741
- Connection Diagrams 743

H Service 749
- Oil Plug Locations 750
- Parts Lists 756

I Products & Key Features 787

J Contacts 801
- Terms & Conditions of Sale 812

Send Quote Requests to info@automatedpt.com
Call +1(800)985-6929 To Order or Order Online At Nordgearmotors.com

NORD Gear



Company Overview

Since 1965, NORD Gear has grown to global proportions on the strength of product performance, superior customer service, and intelligent solutions to a never ending variety of industrial challenges.

All mechanical and electrical components of a drive are available from NORD Gear. Our products cover the full range of drive equipment: helical in-line, Clincher™ shaft-mount, helical-bevel, helical-worm gearboxes, motors and AC drives from 1/6 hp to 250 hp, with torques from 90 lb-in to 900,000 lb-in.

But NORD Gear does far more than manufacture the world's finest drive components. We provide our customers with optimum drive configurations for their specific purposes, providing each and every one of them with truly complete and efficient systems at a price/quality ratio unmatched in today's fast-changing markets.

NORD Gear makes its wide range of products easily available through a global network that provides all customers with prompt delivery and expert support services to consistently exceed customer expectations. We are firmly committed to being totally responsive to the ideas and specifications of every customer, anywhere in the world.

UNICASE™

NORD heavy-duty, one-piece housings are precisely machined to exacting standards. Internal reinforcements further increase strength and rigidity. All bearings and seal seats are contained within the casting, eliminating splits or bolt-on carriers that can weaken the housing and allow oil leakage. Bores and mounting faces are machined in one step, producing extremely precise tolerances — thus ensuring accurate positioning of gear teeth, bearings and seals, and longer life for all components.

Benefits

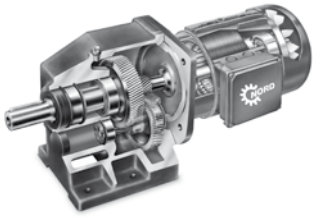

- Leak-free design
- Quiet operation
- High output torque capabilities
- Extended lubrication life
- Longer gear and bearing life
- Superior dependability/low maintenance/longer life

High-Performance Motors & Brakemotors

NORD motors are designed to run cool for longer service life. Low rotor inertia and high starting torque allow peak performance in the most difficult applications for inverter and vector duty per NEMA MG 1-1998 Section 31.4.4.2 voltage spikes. Our motors are internationally accepted, conforming to North American NEMA MG 1 and international IEC electrical specifications. High performance options include brakes, encoders, and forced cooling fans.

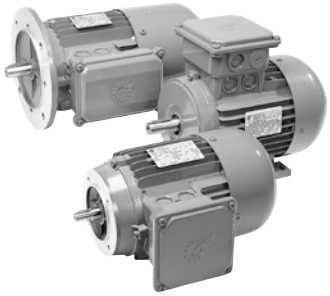

Short, On-Time Delivery

As a NORD customer, you can rest assured that your order will be delivered on time. Because NORD has both decentralized assembly and manufacturing operations and a linked global network, we offer our customers:

- Fast, reliable responses
- Greater product versatility
- Shorter lead times
- Timely shipping
- Rapid delivery

Quality

Quality is assured at NORD assembly and manufacturing facilities, based on ISO 9000 standards — from careful inspection of incoming materials to closely monitored machining operations including gear cutting, turning, hardening & grinding as well as finishing & assembly.

Send Quote Requests to info@automatedpt.com
Call +1(800)985-6929 To Order or Order Online At Nordgearmotors.com

Send Quote Requests to info@automatedpt.com
Call +1(800)985-6929 To Order or Order Online At Nordgearmotors.com

NORD 911

Trouble? Just call 715-NORD-911 (in Canada, 905-796-3606). Emergency service is available 24 hours a day, 7 days a week. We'll answer your call, ship the parts, or build a unit and have it shipped directly to you to provide what you need, when you need it.

Manufacturing

NORD continually invests in research, manufacturing and automation technology. This is to ensure the highest possible quality at affordable prices. NORD invests heavily in our North American facilities as well as our factories around the world. Recent examples include expanding our Waunakee factory and adding numerous new large gear unit assembly cells. In our Glinde, Germany gear factory we added a state-of-the-art Vacuum multi-chamber carburization system.



Global Availability

From Shanghai to Charlotte, and all points between, NORD reaches customers around the world. Deliveries, service, and product support are close at hand, regardless of your location.

Worldwide Standards

NORD products are designed and manufactured based on the latest North American and global standards.

Increased North American Presence

NORD covers North America with over 30 district offices and over 500 distributor branches. NORD operates a manufacturing and assembly facility in Waunakee, WI, Charlotte, NC, Corona, CA, Brampton, ON, and Monterrey, Mexico, resulting in an ever-increasing capacity in the United States and Canada and giving our customers the shortest lead times in the industry.

Energy Efficiency

Lowering your operating costs is one of our greatest goals! NORD research and development focuses on energy efficiency, with gearboxes, motors, and frequency inverters designed for lower energy consumption. Our fully diverse line of in-line or right-angle units and motors has been developed to suit your needs.

Modular Design

NORD's modular design philosophy provides you with a competitive edge by allowing you to configure drive systems to exactly fit your applications.

More than 20,000,000 combinations of totally unique gearmotors and speed reducers are possible – assembled in-line or right-angle, mounted by foot or flange, featuring solid or hollow shafts with either metric or inch shaft extensions – to give you complete freedom to specify a drive solution that's perfect for you.

Benefits

- More output speeds
- More mounting arrangements / Greater flexibility
- Fewer gear stages/Lower cost
- Metric and inch products

NORD engineers stand ready to assist you with your custom applications. Most standard drives can be modified to your purposes, and custom designs can be developed for special applications.

Send Quote Requests to info@automatedpt.com
Call +1(800)985-6929 To Order or Order Online At Nordgearmotors.com

INTRODUCTION

Helical In-line Ordering Guide

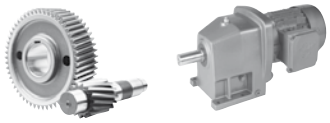

DRIVESYSTEMS

	Gear Unit	Shaft/Mounting	Reducer Options		Input/Motor	Motor Options
SK	❶	❷	❸	-	❹	
					see page 690	see page 690

❶

Gear Unit					
11E	02	03	12/02	63/22	63/23
21E	12	13	22/02	73/22	73/23
31E	22	23	32/12	73/32	83/33N
41E	32	33N	42/12	83/32	93/43
51E	42	43	52/12	83/42	103/53
	52	53		93/42	
	62	63		93/52	
	72	73		103/52	
	82	83			
	92	93			
	102	103			

❷

Shaft/Mounting	
Blank - Footed	**XZ -** Foot/B14 Flange
F - B5 Flange	**XF -** Foot/B5 Flange

❸

Reducer Options	
❒ **VL -** Heavy Duty Output Bearings	❒ **OSG -** Oil Sight Glass
❒ **PR -** Flange Pilot Removal	❒ **OA -** Oil Expansion Chamber
❒ **VI -** Fluoro Rubber Seals	❒ **OC -** Oil Cooler
❒ **SWV -** Special Solid Shaft	❒ **LL -** Long Term Storage
❒ **SM5 -** Stainless Steel Output Shaft	❒ **MDP -** Magnetic Drain Plug
❒ Cross Drilled Shaft	❒ **ADP -** Additional Drain Plug

❹

Input Shaft	NEMA Adapter	IEC	Integral Motors		Integral Energy Efficent Motors		Scoop	Motor Platform	Servo Adapter (Keyed)
W	N56C	IEC 63	**63S/4** - 0.16hp	**160L/4** - 20hp	**80LH/4** - 1hp	**200LH/4** - 40hp	S56	MKN056	SEP 100
	N140TC	IEC 71	**63L/4** - 0.25hp	**180MX/4** - 25hp	**90SH/4** - 1.5hp	**225SH/4** - 50hp	S140T	MKN140	SEP 130
	N180TC	IEC 80	**71S/4** - 0.33hp	**180LX/4** - 30hp	**90LH/4** - 2hp	**225MH/4** - 60hp	S180T	MKN180	SEP 165
	N210TC	IEC 90	**71L/4** - 0.50hp	**200L/4** - 40hp	**100LH/4** - 3hp	**250MH/4** - 75hp	S210T	MKN210	SEP 215
	N250TC	IEC 100	**80S/4** - 0.75hp	**225S/4** - 50hp	**112MH/4** - 5hp	**280SH/4** - 100hp	S250T	MKN250	SEP 300
	N280TC	IEC 112	**80L/4** - 1hp	**225M/4** - 60hp	**132SH/4** - 7.5hp	**280MH/4** - 125hp	S280T	MKN280	**Servo Adapter (Clamp)**
	N320TC	IEC 132	**90S/4** - 1.5hp	**250M/4** - 75hp	**132MH/4** - 10hp	**315SH/4** - 150hp	S320T	MKN320	SEK 100
	N360TC	IEC 160	**90L/4** - 2hp	**280S/4** - 100hp	**160MH/4** - 15hp	**315MH/4** - 175hp	S360T	MKN360	SEK 130
	N400TC	IEC 180	**100L/4** - 3hp	**280M/4** - 125hp	**160LH/4** - 20hp	**315MAH/4** - 200hp	S400T	MKN400	SEK 165
		IEC 200	**100LA/4** - 5hp	**315S/4** - 150hp	**180MH/4** - 25hp	**315LH/4** - 250hp			SEK 215
		IEC 225	**112M/4** - 5.4hp	**315M/4** - 175hp	**180LH/4** - 30hp				SEK 300
		IEC 250	**132S/4** - 7.5hp	**315MA/4** - 200hp					
		IEC 280	**132M/4** - 10hp	**315L/4** - 250hp					
		IEC 315	**160M/4** - 15hp	Other Speeds Available		Other Speeds Available			

Product Specifications

Ratio

_____ :1

see pages 88 - 125

— **OR**—

Output Speed

_____ rpm

see pages 88 - 125

Mounting Position

- ❍ M1
- ❍ M2
- ❍ M3
- ❍ M4
- ❍ M5
- ❍ M6
- ❍ Special _____

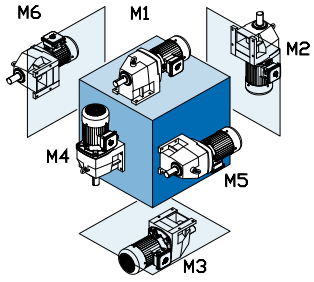

Paint

- ❍ Standard Stainles Steel Paint
- ❍ NSD+ (gray)
- ❍ NSD+W (white)
- ❍ NSD-X3 (gray)
- ❍ NSD-X3W (white)
- ❍ Casting Primed
- ❍ Special _____

Lubricant

- ❍ Standard
- ❍ Synthetic
- ❍ Food Grade
- ❍ Other _____

B5 Flange Diameter (If required)

_____

Gearmotor Only Details

Voltage & Frequency

- ❍ 230/460V-60Hz (460V only ≥ 40 hp)
- ❍ 575V-60Hz
- ❍ 208V-60Hz
- ❍ 400V-50Hz
- ❍ 115/230V-60Hz, 1 ph.
- ❍ Other _____

Terminal Box Pos.

- ❍ TB1
- ❍ TB2
- ❍ TB3
- ❍ TB4

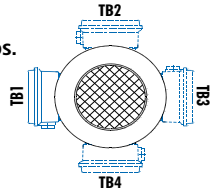

Mtg. Pos. M1 Shown

Conduit Entry Loc.

- ❍ CE I *
- ❍ CE II
- ❍ CE III *
- ❍ CE IV

* Brakemotor

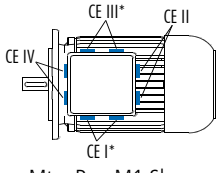

Mtg. Pos. M1 Shown

Send Quote Requests to info@automatedpt.com
Call +1(800)985-6929 To Order or Order Online At Nordgearmotors.com

NORD DRIVESYSTEMS





Clincher™ Ordering Guide

	Gear Unit	Shaft/Mounting	Reducer Options		Motor/Input	Motor Options
SK	❶	❷	❸	–	❹	
					see page 690	see page 690

❶

Gear Unit			
0182NB	1382NB	1282/02	6382/22
0282NB	2382	2282/02	6382/32
1282	3382	3282/12	7382/22
2282	4382	4282/12	7382/32
3282	5382	5282/12	8382/22
4282	6382		8382/32
5282	7382		9382/42
6282	8382		9382/52
7282	9382		10382/52
8282	10382		11382/52
9282	11382		
10282	12382		
11282			

❷

Shaft/Mounting		
VZ - Solid Shaft/B14 Flange	**VX -** Solid Shaft/Foot	**AZ** - Hollow Shaft/B14 Flange
VF - Solid Shaft/B5 Flange	**LX -** Double Solid Shaft/Foot	**AF** - Hollow Shaft/B5 Flange
SCP - Screw Conveyor Package		**AX** - Hollow Shaft/Foot

❸

Reducer Options		
❒ **B -** Fixing Element Kit	❒ **VL -** Heavy Duty Output Bearings	❒ **VI -** Fluoro-rubber Seals
❒ **G -** Rubber Buffers	❒ **VL2 -** Spread Bearing Design	❒ **OSG -** Oil Sight Glass
❒ **VG -** Heavy Duty Rubber Buffers	❒ **VL3 -** Oil Safe Spread Bearing Design	❒ **OA -** Oil Expansion Chamber
❒ **H -** Hollow Shaft Cover	❒ **VL4-** Drywell Drop Bearing Design	❒ **OC -** Oil Cooler
❒ **H66 -** IP66 Hollow Shaft Cover	❒ **LX-** Double Solid Shaft	❒ **WC -** Water Cooling Cover
❒ **SH -** Shrink Disc & Cover	❒ **SM5 -** Stainless Steel Output Shaft	❒ **OT -** Oil Reservoir Tank
❒ **VSH -** Heavy Duty Shrink Disc & Cover	❒ **SWA -** Special Hollow Shaft	❒ **MDP -** Magnetic Drain Plug
❒ **PR -** Flange Pilot Removal	❒ **SWV -** Special Solid Shaft	❒ **ADP -** Additional Drain Plug
❒ **LL -** Long Term Storage	❒ Cross Drilled Shaft	

❹

Input Shaft	NEMA Adapter	IEC	Integral Motors		Integral Energy Efficent Motors		Scoop	Motor Platform	Servo Adapter (Keyed)
W	N56C	IEC 63	**63S/4** - 0.16hp	**160L/4** - 20hp	**80LH/4** - 1hp	**200LH/4** - 40hp	S56	MKN056	SEP 100
	N140TC	IEC 71	**63L/4** - 0.25hp	**180MX/4** - 25hp	**90SH/4** - 1.5hp	**225SH/4** - 50hp	S140T	MKN140	SEP 130
	N180TC	IEC 80	**71S/4** - 0.33hp	**180LX/4** - 30hp	**90LH/4** - 2hp	**225MH/4** - 60hp	S180T	MKN180	SEP 165
	N210TC	IEC 90	**71L/4** - 0.50hp	**200L/4** - 40hp	**100LH/4** - 3hp	**250MH/4** - 75hp	S210T	MKN210	SEP 215
	N250TC	IEC 100	**80S/4** - 0.75hp	**225S/4** - 50hp	**112MH/4** - 5hp	**280SH/4** - 100hp	S250T	MKN250	SEP 300
	N280TC	IEC 112	**80L/4** - 1hp	**225M/4** - 60hp	**132SH/4** - 7.5hp	**280MH/4** - 125hp	S280T	MKN280	Servo Adapter (Clamp)
	N320TC	IEC 132	**90S/4** - 1.5hp	**250M/4** - 75hp	**132MH/4** - 10hp	**315SH/4** - 150hp	S320T	MKN320	
	N360TC	IEC 160	**90L/4** - 2hp	**280S/4** - 100hp	**160MH/4** - 15hp	**315MH/4** - 175hp	S360T	MKN360	SEK 100
	N400TC	IEC 180	**100L/4** - 3hp	**280M/4** - 125hp	**160LH/4** - 20hp	**315MAH/4** - 200hp	S400T	MKN400	SEK 130
		IEC 200	**100LA/4** - 5hp	**315S/4** - 150hp	**180MH/4** - 25hp	**315LH/4** - 250hp			SEK 165
		IEC 225	**112M/4** - 5.4hp	**315M/4** - 175hp	**180LH/4** - 30hp				SEK 215
		IEC 250	**132S/4** - 7.5hp	**315MA/4** - 200hp					SEK 300
		IEC 280	**132M/4** - 10hp	**315L/4** - 250hp					
		IEC 315	**160M/4** - 15hp	Other Speeds Available		Other Speeds Available			

Product Specifications

Ratio

_____ :1

see pages 244 - 288

— OR —

Output Speed

_____ rpm

see pages 244 - 288

Mounting Position

- ❍ M1
- ❍ M2
- ❍ M3
- ❍ M4
- ❍ M5
- ❍ M6
- ❍ Special _____

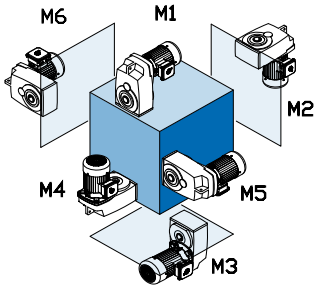

Paint

- ❍ Standard Stainles Steel Paint
- ❍ NSD+ (gray)
- ❍ NSD+W (white)
- ❍ NSD-X3 (gray)
- ❍ NSD-X3W (white)
- ❍ Casting Primed
- ❍ Special _____

Lubricant

- ❍ Standard
- ❍ Synthetic
- ❍ Food Grade
- ❍ Other _____

Hollow Shaft Diameter (If required)

see pages 388 - 393

B5 Flange Diameter (If required)

SCP Drive Shaft Diameter (If required)

see page 29

Gearmotor Only Details

Voltage & Frequency

- ❍ 230/460V-60Hz (460V only ≥ 40 hp)
- ❍ 575V-60Hz
- ❍ 208V-60Hz
- ❍ 400V-50Hz
- ❍ 115/230V-60Hz, 1 ph.
- ❍ Other _____

Terminal Box Pos.

- ❍ TB1
- ❍ TB2
- ❍ TB3
- ❍ TB4

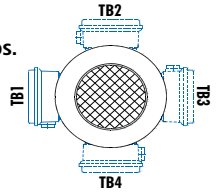

Mtg. Pos. M1 Shown

Conduit Entry Loc.

- ❍ CE I *
- ❍ CE II
- ❍ CE III *
- ❍ CE IV

* Brakemotor

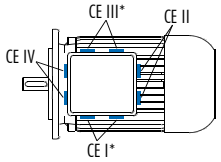

Mtg. Pos. M1 Shown

Send Quote Requests to info@automatedpt.com
Call +1(800)985-6929 To Order or Order Online At Nordgearmotors.com

Helical-Bevel Ordering Guide

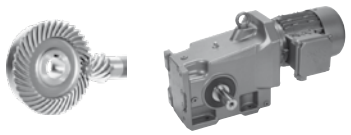

DRIVESYSTEMS

	Gear Unit	Shaft/Mounting	Reducer Options		Motor/Input	Motor Options
SK	❶	❷	❸	-	❹	
					see page 690	see page 690

❶

Gear Unit			
92072	9012.1	9013.1	9072.1/32
92172	9016.1	9017.1	9072.1/42
92372	9022.1	9023.1	9082.1/42
92672	9032.1	9033.1	9082.1/52
92772	9042.1	9043.1	9086.1/52
	9052.1	9053.1	9092.1/52
	9072.1		9096.1/62
	9082.1		
	9086.1		
	9092.1		
	9096.1		

❷

Shaft/Mounting		
- Solid Shaft/Foot Mount	**VXZ -** Solid Shaft/Foot/B14 Flange	**AZ** - Hollow Shaft/B14 Flange
VZ - Solid Shaft/B14 Flange	**VXF -** Solid Shaft/Foot/B5 Flange	**AF** - Hollow Shaft/B5 Flange
VF - Solid Shaft/B5 Flange	**LXZ -** Double Solid Shaft/Foot/ B14 Flange	**AX** - Hollow Shaft/Foot Mount
LX - Double Solid Shaft/Foot		**AXZ -** Hollow Shaft/Footed/B14 Flange
		AXF - Hollow Shaft/Footed/B5 Flange

❸

Reducer Options		
❒ **B -** Fixing Element Kit	❒ **VL -** Heavy Duty Output Bearings	❒ **VI -** Flouro-rubber Seals
❒ **H -** Hollow Shaft Cover	❒ **VL2 -** Spread Bearing Design	❒ **OSG -** Oil Sight Glass
❒ **H66 -** IP66 Hollow Shaft Cover	❒ **VL3 -** Oil Safe Spread Bearings	❒ **OA -** Oil Expansion Chamber
❒ **D -** Torque Arm	❒ **VL4 -** Drywell	❒ **OC -** Oil Cooler
❒ **K -** Bottom Mount Torque Arm	❒ **SM5 -** Stainless Steel Shaft	❒ **WC -** Water Cooling Cover
❒ **PR -** Flange Pilot Removal	❒ **SWA -** Special Hollow Shaft	❒ **LL -** Long Term Storage
❒ **SH -** Shrink Disc & Cover	❒ **SWV -** Special Solid Shaft	❒ **MDP -** Magnetic Drain Plug
❒ **VSH -** Heavy Duty Shrink Disc & Cover	❒ **R -** Backstop	❒ **ADP -** Additional Drain Plug

❹

Input Shaft	NEMA Adapter	IEC Adapter	Integral Motors		Integral Energy Efficent Motors		Scoop	Motor Platform	Servo Adapter (Keyed)
W	N56C	IEC 63	**63S/4** - 0.16hp	**160L/4** - 20hp	**80LH/4** - 1hp	**200LH/4** - 40hp	S56	MKN056	SEP 100
	N140TC	IEC 71	**63L/4** - 0.25hp	**180MX/4** - 25hp	**90SH/4** - 1.5hp	**225SH/4** - 50hp	S140T	MKN140	SEP 130
	N180TC	IEC 80	**71S/4** - 0.33hp	**180LX/4** - 30hp	**90LH/4** - 2hp	**2525MH/4** - 60hp	S180T	MKN180	SEP 165
	N210TC	IEC 90	**71L/4** - 0.50hp	**200L/4** - 40hp	**100LH/4** - 3hp	**250MH/4** - 75hp	S210T	MKN210	SEP 215
	N250TC	IEC 100	**80S/4** - 0.75hp	**225S/4** - 50hp	**112MH/4** - 5hp	**280SH/4** - 100hp	S250T	MKN250	SEP 300
	N280TC	IEC 112	**80L/4** - 1hp	**2525M/4** - 60hp	**132SH/4** - 7.5hp	**280MH/4** - 125hp	S280T	MKN280	**Servo Adapter (Clamp)**
	N320TC	IEC 132	**90S/4** - 1.5hp	**250M/4** - 75hp	**132MH/4** - 10hp	**315SH/4** - 150hp	S320T	MKN320	
	N360TC	IEC 160	**90L/4** - 2hp	**280S/4** - 100hp	**160MH/4** - 15hp	**315MH/4** - 175hp	S360T	MKN360	SEK 100
	N400TC	IEC 180	**100L/4** - 3hp	**280M/4** - 125hp	**160LH/4** - 20hp	**315MAH/4** - 200hp	S400T	MKN400	SEK 130
		IEC 200	**100LA/4** - 5hp	**315S/4** - 150hp	**180MH/4** - 25hp	**315LH/4** - 250hp			SEK 165
		IEC 225	**112M/4** - 5.4hp	**315M/4** - 175hp	**180LH/4** - 30hp				SEK 215
		IEC 250	**132S/4** - 7.5hp	**315MA/4** - 200hp					SEK 300
		IEC 280	**132M/4** - 10hp	**315L/4** - 250hp					
		IEC 315	**160M/4** - 15hp	Other Speeds Available		Other Speeds Available			

Product Specifications

Ratio

_____ :1

see pages 398 - 446

OR

Output Speed

_____ rpm

see pages 398 - 446

Mounting Position

- ❍ M1
- ❍ M2
- ❍ M3
- ❍ M4
- ❍ M5
- ❍ M6
- ❍ Special _____

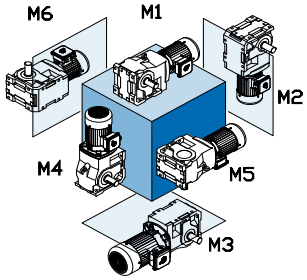

Paint

- ❍ Standard Stainles Steel Paint
- ❍ NSD+ (gray)
- ❍ NSD+W (white)
- ❍ NSD-X3 (gray)
- ❍ NSD-X3W (white)
- ❍ Casting Primed
- ❍ Special _____

Lubricant

- ❍ Standard
- ❍ Synthetic
- ❍ Food Grade
- ❍ Other _____

Solid Shaft Side (if required)

- ❍ Shaft Side A
- ❍ Shaft Side B
- ❍ Shaft Side A&B

see page 18

Hollow Shaft Diameter (if required)

_____

see pages 566 - 573

B5 Flange Side (if required)

- ❍ Flange Side A
- ❍ Flange Side B
- ❍ Flange Side A&B

see page 18

B5 Flange Diameter (if required)

_____

Torque Arm Side & Location (if required)

- ❍ Side A
- ❍ Side B

_____ Location

see page 18

Shrink Disc Side (if required)

- ❍ Side A
- ❍ Side B

see page 18

H66 Side (if required)

- ❍ H66 Side A
- ❍ H66 Side B

see page 18

Gearmotor Only Details

Voltage & Frequency

- ❍ 230/460V-60Hz (460V only ≥ 40 hp)
- ❍ 575V-60Hz
- ❍ 208V-60Hz
- ❍ 400V-50Hz
- ❍ 115/230V-60Hz, 1 ph.
- ❍ Other _____

Terminal Box Pos.

- ❍ TB1
- ❍ TB2
- ❍ TB3
- ❍ TB4

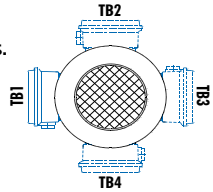

Mtg. Pos. M1 Shown

Conduit Entry Loc.

- ❍ CE I *
- ❍ CE II
- ❍ CE III *
- ❍ CE IV

* Brakemotor

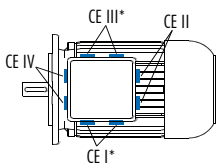

Mtg. Pos. M1 Shown

Send Quote Requests to info@automatedpt.com
Call +1(800)985-6929 To Order or Order Online At Nordgearmotors.com

NORD DRIVESYSTEMS

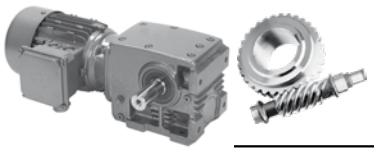

Helical-Worm Ordering Guide

	Gear Unit	Shaft/Mounting	Reducer Options		Motor/Input	Motor Options
SK	❶	❷	❸	-	❹	
					see page 690	see page 690

❶

Gear Unit	
02040	13050
02050	13063
12063	13080
12080	33100
32100	43125
42125	

❷

Shaft/Mounting	
- Solid Shaft/Foot Mount	**AZ** - Hollow Shaft/B14 Flange
VF - Solid Shaft/B5 Flange	**AF** - Hollow Shaft/B5 Flange
LX - Double Solid Shaft/Foot	

❸

Reducer Options		
❒ **B** - Fixing Element Kit	❒ **SH** - Shrink Disc & Cover	❒ **VI** - Flouro-rubber Seals
❒ **D** - Torque Arm	❒ **PR** - Flange Pilot Removal	❒ **OSG** - Oil Sight Glass
❒ **H** - Hollow Shaft Cover	❒ **SM5** - Stainless Steel Shaft	❒ **OA** - Oil Expansion Chamber
❒ **H66** - IP66 Hollow Shaft Cover	❒ **SWA** - Special Hollow Shaft	❒ **OC** - Oil Cooler
❒ **VL** - Heavy Duty Output Bearings	❒ **SWV** - Special Solid Shaft	❒ **MDP** - Magnetic Drain Plug
❒ **LL** - Long Term Storage	❒ Cross Drilled Shaft	❒ **ADP** - Additional Drain Plug

❹

Input Shaft	NEMA Adapter	IEC Adapter	Integral Motors		Integral Energy Efficent Motors		Sugar Scoop	Motor Platform	Servo Adapter (Keyed)
W	**N56C**	**IEC 63**	**63S/4** - 0.16hp	**100L/4** - 3hp	**80LH/4** - 1hp	**132SH/4** - 7.5hp	**S56**	**MKN056**	**SEP 100**
	N140TC	**IEC 71**	**63L/4** - 0.25hp	**100LA/4** - 5hp	**90SH/4** - 1.5hp	**132MH/4** - 10hp	**S140T**	**MKN140**	**SEP 130**
	N180TC	**IEC 80**	**71S/4** - 0.33hp	**112M/4** - 5.4hp	**90LH/4** - 2hp	**160MH/4** - 15hp	**S180T**	**MKN180**	**SEP 165**
	N210TC	**IEC 90**	**71L/4** - 0.50hp	**132S/4** - 7.5hp	**100LH/4** - 3hp	**160LH/4** - 20hp	**S210T**	**MKN210**	**SEP 215**
	N250TC	**IEC 100**	**80S/4** - 0.75hp	**132M/4** - 10hp	**112MH/4** - 5hp		**S250T**	**MKN250**	**SEP 300**
		IEC 112	**80L/4** - 1hp	**160M/4** - 15hp					**Servo Adapter (Clamp)**
		IEC 132	**90S/4** - 1.5hp	**160L/4** - 20hp					**SEK 100**
		IEC 160	**90L/4** - 2hp						**SEK 130**
									SEK 165
									SEK 215
									SEK 300

Product Specifications

Ratio

:1

see pages 578 - 596

OR

Output Speed

rpm

see pages 578 - 596

Mounting Position

- ❍ M1
- ❍ M2
- ❍ M3
- ❍ M4
- ❍ M5
- ❍ M6
- ❍ Special _____

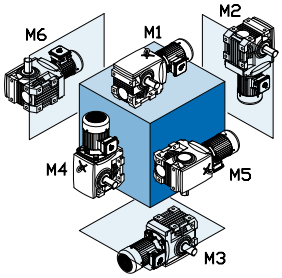

Paint

- ❍ Standard Stainles Steel Paint
- ❍ NSD+ (gray)
- ❍ NSD+W (white)
- ❍ NSD-X3 (gray)
- ❍ NSD-X3W (white)
- ❍ Casting Primed
- ❍ Special _____

Lubricant

- ❍ Standard
- ❍ Synthetic
- ❍ Food Grade
- ❍ Other _____

Solid Shaft Side (if required)

- ❍ Shaft Side A
- ❍ Shaft Side B
- ❍ Shaft Side A&B

see page 18

Hollow Shaft Diameter (if required)

see pages 669 - 671

B5 Flange Side (if required)

- ❍ Flange Side A
- ❍ Flange Side B
- ❍ Flange Side A&B

see page 18

B5 Flange Diameter (if required)

Torque Arm Side & Location (if required)

- ❍ Side A
- ❍ Side B

Location

see pages 18

Shrink Disc Side (if required)

- ❍ Side A
- ❍ Side B

see pages 18

H66 Side (if required)

- ❍ H66 Side A
- ❍ H66 Side B

see pages 18

Gearmotor Only Details

Voltage & Frequency

- ❍ 230/460V-60Hz (460V only ≥ 40 hp)
- ❍ 575V-60Hz
- ❍ 208V-60Hz
- ❍ 400V-50Hz
- ❍ 115/230V-60Hz, 1 ph.
- ❍ Other _____

Terminal Box Pos.

- ❍ TB1
- ❍ TB2
- ❍ TB3
- ❍ TB4

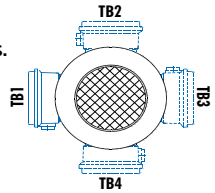

Mtg. Pos. M1 Shown

Conduit Entry Loc.

- ❍ CE I *
- ❍ CE II
- ❍ CE III *
- ❍ CE IV

* Brakemotor

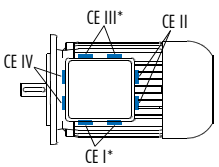

Mtg. Pos. M1 Shown

Send Quote Requests to info@automatedpt.com
Call +1(800)985-6929 To Order or Order Online At Nordgearmotors.com

INTRODUCTION

Motor Order Form



NORD DRIVESYSTEMS

	Frame	Size	Poles	Motor Options	Brake Size	Brake Options
SK						

Frame	Size	Poles
63	S	4
71	SH	2
80	M	6
90	MH	4-2
100	MX	8-2
112	L	8-4
132	LA	12-2
	LH	Other
	LX	

Paint

- ❍ Unpainted Aluminum Alloy
- ❍ Stainless Steel Paint
- ❍ NSD+ (gray)
- ❍ NSD+W (white)
- ❍ NSD-X3 (gray)
- ❍ NSD-X3W (white)
- ❍ Special _____

Electrical Motor Options

- ❒ **H** - Energy Efficient Motor
- ❒ **TW** - Thermostat
- ❒ **TF** - Thermistor
- ❒ **SH** - Space Heater (select voltage)
  - ❍ 110 Volt ❍ 230 Volt ❍ 460 Volt
- ❒ **ISO** H - Class H insulation
- ❒ **WU** - High Resistance Rotor
- ❒ **4-2** - 2-Speed, 4/2 Pole, 1800/3600rpm
- ❒ **8-2** - 2-Speed, 8/2 Pole, 900/3600rpm
- ❒ **ECR** - Single Phase Motor

Environmental Options

- ❒ **NSD+** - Nord Severe Duty Paint
- ❒ **NSDx3** - Nord Extreme Duty Paint
- ❒ **RD** - Canopy Drip Cover
- ❒ **RDD** - Double Fan Cover
- ❒ **KB** - Condensation Drain Holes (plugged)
- ❒ **KBO** - Condensation Drain Holes (open)
- ❒ **IP66** - IP66 Enclosure Protection
- ❒ **KKV** - Terminal Box Sealed with Resin
- ❒ **AICM** - Additional Insulation
- ❒ **EP** - Epoxy Dipped Windings

Frequency Inverter Related Options

- ❒ **F** - Blower Fan (200-575V 1 & 3 Phase)
- ❒ **FC** - Blower Cooling Fan (115V, 1 Phase)
- ❒ **IG__** - Incremental Encoder
- ❒ **IG__P** - Incremental Encoder with Plug
- ❒ **AG** - Absolute Encoder

Additional Motor Options

- ❒ **OL** - Totally Enclosed Non-Ventilated (TENV)
- ❒ **OL/H** - (TENV) Without Fan Cover
- ❒ **WE** - Second Shaft Extension (Fan Side)
- ❒ **HR** - Hand Wheel
- ❒ **Z** - High Inertia Cast Iron Fan
- ❒ **RLS** - Motor Backstop (rotation viewing fan)
  - ❍ Clockwise ❍ Counter-Clockwise
- ❒ **EKK** - Small Terminal Box (not UL approved)
- ❒ **MS** - Quick Power Plug Connector

Brake Size
BRE 5
BRE 10
BRE 20
BRE 40
BRE 60
BRE 100
BRE 150

- ❒ **HL** - Hand Release Lever
- ❒ **FHL** - Locking Hand Release Lever
- ❒ **HLH** - Hand Release Lever with Hole
- ❒ **RG** - Corrosion Protected Brake
- ❒ **SR** - Dust and Corrosion Protected Brake
- ❒ **ADJ_____Nm** - Adjust Brake Torque
- ❒ **BIP66** - IP66 Brake Enclosure
- ❒ **MIK** - Micro-switch
- ❒ **BSH** - Brake Heating/Bifilar Coil
- ❒ **NRB1** - Quiet Brake Release
- ❒ **NRB2** - Quiet Brake Motor Operation
- ❒ **FBR** - Brass Foil
- ❒ **DBR** - Double Brake
- ❒ **G...P** - High Performance Rectifier
- ❒ **G...V** - Sealed Rectifier
- ❒ **IR** - Current Sensing Relay

Rectifier Selection ⇨📖 732 - 735

Rectifier Wiring

- ❍ Across the line (from motor terminal box)
- ❍ Separate power source (frequency inverter, soft starter)

Brake Supply Voltage

- ❍ 24 VDC
- ❍ 115 VAC
- ❍ 200 VAC
- ❍ 230 VAC
- ❍ 400 VAC
- ❍ 460 VAC
- ❍ 500 VAC
- ❍ 575 VAC
- ❍ Other _____

Braking Method

- ❍ Method 10
- ❍ Method 15
- ❍ Method 20
- ❍ Method 25
- ❍ Method 30
- ❍ Method 35
- ❍ Method 40
- ❍ Method 45
- ❍ Method 50
- ❍ Method 55

Hand Release Position

- ❍ HL1
- ❍ HL2
- ❍ HL3
- ❍ HL4

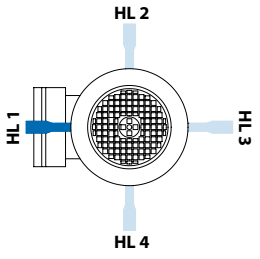

Mounting

- ❍ Integral to gearbox
- ❍ NEMA C-Face
- ❍ IEC B5 Mount

Voltage & Frequency

- ❍ 230/460V-60Hz
- ❍ 575V-60Hz
- ❍ 208V-60Hz
- ❍ 400V-50Hz
- ❍ 115/230V, 60Hz-1-ph.
- ❍ Other

Terminal Box Pos.

- ❍ TB1
- ❍ TB2
- ❍ TB3
- ❍ TB4

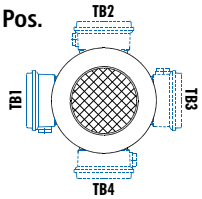

Mtg. Pos. M1 Shown

Conduit Entry Loc.

- ❍ CE I *
- ❍ CE II
- ❍ CE III *
- ❍ CE IV

* Brakemotor

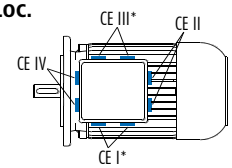

Mtg. Pos. M1 Shown

Send Quote Requests to info@automatedpt.com
Call +1(800)985-6929 To Order or Order Online At Nordgearmotors.com

Send Quote Requests to info@automatedpt.com Call +1(800)985-6929 To Order or Order Online At Nordgearmotors.com

Gearbox Selection

A number of factors are considered when selecting a gear unit, including gearbox rating, service factor, speed and speed variation, horsepower, thermal capacity, ratio, physical size, ambient conditions and cost. Below are some guideline steps to help aid in the gear unit selection.

1. Determine the speed and/or gear ratio
2. Determine the required power or torque
3. Determine Service Factor
4. Select the basic gearbox type and input
5. Determine the required mounting position
6. Select options
7. Checks – overhung load, thrust load, NEMA motor weight, thermal considerations, and other application considerations

1. Speed and Gear Ratio

The first step in selecting a gear unit is determining the final output speed or speeds you need. This speed is normally described in revolutions per minute (rpm). This output speed or speeds is determined by the input speed to the gear unit divided by its gear ratio. Their relationship is described by the following formulas.

$$\text{i (gear ratio)} = \frac{\text{Input speed [rpm]}}{\text{Output speed [rpm]}}$$

$$\text{Output speed [rpm]} = \frac{\text{Input speed [rpm]}}{\text{i (gear ratio)}}$$

To specify a gear unit, you can identify either gear ratio needed or the output speed (rpm) if the input speed is known.

2. Power and Torque

The second step for selecting a gear unit is the required power or torque needed to power the load. Torque in this catalog is normally expressed in pound-inches [lb-in].

$$\text{Power [hp]} = \frac{\text{Torque [lb-in] x speed [rpm]}}{63025}$$

$$\text{Torque [lb-in]} = \frac{\text{Power [hp] x 63025}}{\text{speed [rpm]}}$$

For a proper selection you must ensure that the motor or other prime mover can produce enough torque or power and that the gear unit has adequate torque or power capacity. You must also consider if the power or torque is specified at the input or output of the gear unit. The Helical-worm gear units have lower efficiency than in-line or bevel gear units, therefore helical-worm products efficiency may need to be considered in the selection.

To specify a gear unit you can identify torque or power.

3. Service Factor or Service Class

In addition to power or torque, service factor must also be considered. A service factor is essentially the ratio of extra capacity in a gear unit compared to the power or torque that is needed to run that application. The goal of selecting a gear unit with extra capacity (service factor) is to provide adequate service life in operation.

One reason to apply a larger service factor is if a unit operates more hours per day. If a unit runs 24 hours per day it should normally have a higher service factor than a unit that runs 8 hours per day if you expect the same calendar life.

A second reason for applying a larger service factor is to cope with a more difficult application. Even if it takes the same power and speed to operate a rock crusher as a fan, the rock crusher needs a stronger gearbox (higher service factor) to give the same operating life as the gear unit powering the fan.

The real question is how to determine the proper service factor for a gear unit in an application. Following are four possible methods.

Customer or User Specification

Many customers will have their own service factor guidelines or specifications.

AGMA Service Factoring

American Gear Manufacturers Association (AGMA) publishes lists of recommended service factors for different applications. These service factor recommendations have been determined form the experience of many gear manufactures and are in AGMA standard 6010. See page 68 for additional detail.

AGMA Service Classes

American Gear Manufactures Association (AGMA) has another method for selecting gear units service factors. AGMA standard 6009 lists many applications by a service class (I, II, III) with class I being the simplest applications and class III being the hardest. These application service classes are associated with a range of service factors by the following table.

AGMA Service Class	Service Factor
I	1.00 to 1.39
II	1.40 to 1.99
III	2.00 and above

In the gearmotors selection table each unit is also classified by an AGMA service class. See page 64 for additional detail.

Send Quote Requests to info@automatedpt.com
Call +1(800)985-6929 To Order or Order Online At Nordgearmotors.com

Selection Information

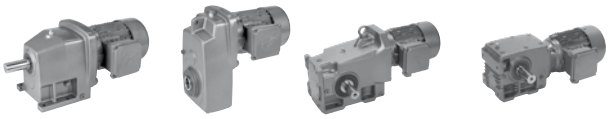

DRIVESYSTEMS

NORD Mass Acceleration Service Factoring

NORD often uses a calculation based system to properly assign a service factor. This system considers hours of operation per day, the severity of the application and the number of times the equipment is cycled. See page 62 for additional detail.

4. Gearbox Type & Input

NORD gear drives are available in a number of mechanical configurations including:

- Helical in-line
- Clincher™ shaft mount
- Right-angle helical-bevel
- Right-angle helical-worm

NORD's modular design allows for a number of different inputs to be added to NORD reducers including:

- Integral motor
- NEMA-C and IEC motor adapter
- Solid input shaft
- Servo motor adapter
- Sugar scoop mount
- Top motor mount platform
- NORDISC™ variable speed friction drives
- Titan™ variable speed belt boxes

5. Mounting Position

The gearbox mounting position is an important and often overlooked specification. The mounting position determines how much oil the gear reducer requires, in addition to determining the position of the oil drain, oil fill and vent on the gear drive. NORD offers six basic mounting positions. If your application requires a variation from the six basic mounting positions, please contact NORD.

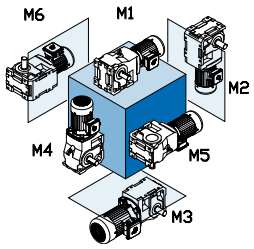

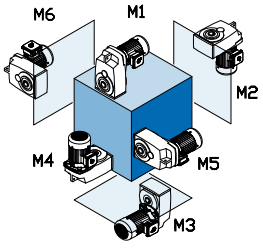

Many gearbox and motor options require a location designation. For example a right-angle helical-bevel unit with a single solid shaft extension requires a shaft extension side location. Please see page 18 for additional options that require location designation.

6. Options

NORD offers a number of mechanical, protective, paint & lubrication options for gear reducers & motors. Please see page 19 for gear unit options & refer to the motor section (Section G) for motor options.

7. Checks

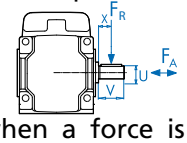

Overhung Load

An overhung or radial load exists when a force is applied at right-angles to a shaft beyond the shaft's outermost bearing. Pulleys, sheaves and sprockets will cause an overhung load when used as a power take-off. The amount of overhung load will vary, depending on the type of power take-off used and where it is located on the shaft.

Overhung load [FQ] can be found in the gearmotor rating tables and input shaft overhung load ratings [FQ1] can be found on pages 52 - 59. Overhung load capacities should not exceed the values in the table to ensure long bearing life. Overhung load capacities are to be applied at the midpoint of the shaft extension and without thrust loads.

To calculate overhung load see page 52.

Thrust Loads (Axial)

Loads that are directed towards or away from the gearbox along the axis of the shaft are called thrust or axial loads. Output shaft thrust capacity [FA] can be found in the gearmotor rating tables. Input shaft capacity [FA1] can be found on pages 58. Thrust load capacities should not exceed the values listed in the tables to ensure long bearing life. Thrust load capacities are listed for pure axial loads with no overhung load. Contact NORD for combination loads or a more exact examination of the application.

NEMA C-face Motor Weight Limits

When mounting a motor to a NORD NEMA C-face motor adapter it is important to consider the motor's weight. Following is a table that includes the maximum motor weight the NEMA adapter can support. If the motor exceeds the listed weight is must be externally supported. When a C-face mounted motor is externally supported care must be taken to ensure that the support system does not impose additional pre-loads on the NEMA motor adapter.

NEMA Weights

Motor FRAME	56C	143TC	145TC	182TC	184TC	210TC
Max Weight [lb]	66	88	110	130	175	220
Motor FRAME	**250TC**	**280TC**	**324TC**	**326TC**	**365TC**	
Max Weight [lb]	450	550	770	1100	1550	

Send Quote Requests to info@automatedpt.com
Call +1(800)985-6929 To Order or Order Online At Nordgearmotors.com

Send Quote Requests to info@automatedpt.com Call +1(800)985-6929 To Order or Order Online At Nordgearmotors.com

General Warnings & Cautions

Applications with risk of personal injury should be reviewed together with NORD. Examples of these are hoist, lifts or other applications where people may be at risk.

Helical-worm Efficiency

NORD worm gear units can reach efficiencies up to 92%.

Worm gears require a run-in period to reach their peak efficiency. Due to this the unit efficiency will be lower when the gear unit is new. The effect is greater at lower worm incline angles meaning with worms that have a low number of worm starts (or leads). Based on experience the following reduction in efficiency should be considered before the run-in is completed

Worm Starts (leads)	Reduction in efficiency
1	12%
2	6%
3	3%
6	2%

The number of worm starts is listed in the gear ratio tables in the helical-worm reducer ratings tables.

The run-in period is approximately 25 hours of operation at maximum load.

Following conditions must be met in order to reach the catalog efficiency values.

- Gear unit is fully run-in
- Gear unit has reached a constant temperature
- The required type of lubricant is used
- The required lubrication quantity is used
- The unit is operating at full rated torque

Vertical Mounting Position for Gear Units & Motors

Observe thermal limit rating – see page 14. For motors which are mounted vertically upwards (Mounting position M4) and ratios < 24, we highly recommend oil expansion chambers in order to avoid leakage through the vent plug.

NEMA and IEC adapters use in hoist, lifts and other applications with danger of personal injury should be reviewed together with NORD.

NEMA/IEC adapter have additional shaft coupling and additional bearing seats compared to integral motors so there are higher no-load losses with NEMA or IEC adapters. We recommend mounting the motor directly, since it offers both technical and cost advantages.

External Installation, Tropical Use

Gearboxes installed outside, in damp rooms, or used in the tropics may require special seals & anti-corrosion options. Please contact NORD for application assistance.

Special conditions

If special environmental or other conditions exist in transit, storage or operation these need to be considered in the unit selection. Special conditions may include (but are not limited to) the following:

- Exposure to aggressive corrosive materials (contaminated air, gasses, acids, bases, salts, etc.)
- Very high relative humidity
- Direct contact between t he motor and liquid
- Material build- up on the gear unit or motor (dirt, dust, sand, etc.)
- High atmospheric pressure
- Radiation
- Extreme temperatures, high, low or large temp. changes
- High vibration, accelerations, shock or impacts
- Other abnormal conditions

Storage Before Installation

The gear units and motors should be stored in a dry area before they are to be installed. Special measures are required for longer storage. Please request long term storage instructions from NORD Gear or from the NORD web site.

Multi-stage Gear Units

With 4-, 5-, 6-stage multi-stage gear units, there are additional no-load loss due to the added rotating parts and the relatively small drive input power. Thus, a no-load loss of approximately 40 watts for 4-pole motors up to 1 HP (0.75 kW) is accounted for in the performance tables.

NEMA C-Face Adapter Capacity

The NEMA adapters are designed to handle the torques produced by the standard NEMA power assignment at 4 pole (1800 rpm) motor speeds. If a larger motor power is used than the power below NORD should be consulted. Also if a NEMA adapter is being used for other than an AC induction motor NORD should be consulted.

Adapter	Max Power [hp]	Adapter	Max Power [hp]
56C	1	250TC	20
140TC	2	280TC	30
180TC	5	320TC	50
210TC	10	360TC	75

Send Quote Requests to info@automatedpt.com
Call +1(800)985-6929 To Order or Order Online At Nordgearmotors.com

Selection Information



Gear Reducer Ratings

The permissible continuous power limit of gear reducers is limited by both the mechanical rating and the thermal rating. The mechanical rating depends upon the material strength of the gear reducer's gears, bearings, housing, shafts, etc. The mechanical input power limit to the reducer is also a function of the mechanical power rating divided by the relevant reducer service factor.

The thermal rating or thermal limit depends upon the amount heat generated within the reducer and is influenced by a variety of factors including:

- Churning or splashing losses in the lubricant which depend upon reducer type, ratio, input style, mounting position or oil fill-level, and the circumferential travel velocities of the gear wheels.
- The actual speed and load conditions. These factors determine load-dependent losses in the gears and frictional losses in the gears, bearings and seal areas.
- Ambient Conditions:
  - Ambient Temperature.
  - Amount of free air circulation around the drive.
  - Possible near-by heat sources.
  - Heat dissipation or the ability of the reducer to transfer heat through the housing, shafts, and the mating sub-structure or mounting surface.

Observing the Reducer's Thermal Limit

When to Contact NORD

Through computer program analysis NORD can evaluate application conditions and the impact they have on a reducer's thermal capacity.

When applying helical in-line, Clincher™ shaft mount, & helical-bevel gear units of case sizes 6 & larger (SK62, SK6282 and SK9072.1 and larger), consult NORD if any two or more of the following conditions apply:

- Gear ratio, $i_{total} \leq 24{:}1$ or $\leq 48{:}1$ for helical-bevel units
- Input power, $P_1 \geq 60$ hp (45 kw)
- Input speed, $n_1 > 1800$
- Vertical positioning (mounting position M2 or M4)
- Input configuration: NEMA C-face, IEC, servo adapter or solid-shaft input (Type-W)
- Elevated ambient temperature ≥ 86° F (30 °C)

When applying helical worm or worm gear units, please consult NORD if one of the following conditions applies:

- Input speed, $n_1 > 1800$
- Vertical positioning (mounting position M2 or M4)
- Input configuration: NEMA C-face, IEC, servo adapter or solid-shaft input (Type-W)
- Elevated ambient temperature ≥ 86° F (30 °C)

Advise NORD of any special application considerations:

- Confined space or limited air circulation
- Exposure to other near-by radiant heat sources
- Dirty or dusty environments
- High altitude operation > 3,280 ft (1000 m) a.s.l.

Dangers of Reducer Overheating

The following problems may result when a reducer's thermal capacity or maximum oil sump temperatures are exceeded:

- Lubrication oxidation, breakdown & deterioration.
- A decrease in lubrication viscosity & film thickness.
- Loss of critical bearing and gear clearances required for proper lubrication.
- Increased contact pressures & increased operating temps. in the critical load zones of the gearing and bearings.
- An increased possibility for metal-to-metal contact and premature component wear.
- A significant reduction in the lubricant's ability to prevent scuffing, pitting, and in extreme cases galling or welding.

Maximum Oil Sump Temperature Limit

To prevent reducer overheating, the reducer's maximum oil sump temperature limit must not be exceeded for prolonged periods of operation (up to 3 hours continuous operation, depending upon reducer size).

Oil Type	Maximum Oil Temperature Limit	
	NORD	AGMA 9005-D94
Mineral	80-85 °C (176-185 °F)	95 °C (203 °F)
Synthetic	105 °C (220 ° F)	107 ° C (225 ° F)

Measures to Expand the Application Range

There are a variety of measures that may be taken in order to protect against thermal overload and expand the application range of the gear reducer. Common examples include the following:

- Recommending a change in lubrication viscosity and/or a specific synthetic lubricant type.
- Applying high-temperature seals.
- Increasing air flow around the gear unit.
- Protecting the reducer from high heat sources.
- Considering an integral motor instead of the bolt-on input assembly covers. In many cases the motor fan will substantially increase air-flow around the gear unit.
- Add an Oil Expansion/Overflow Chamber (Option "OA") or an Oil Reservoir (Option "OT").
- Oil Cooler (Option "OC").
- Water Cooling Cover (Option "WC")

Send Quote Requests to info@automatedpt.com
Call +1(800)985-6929 To Order or Order Online At Nordgearmotors.com

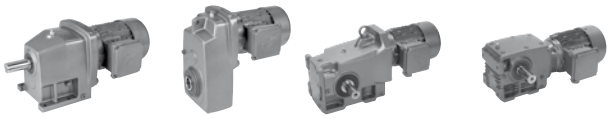

Selection Inquiry

Contact: _____ **Company:** _____

Telephone: _____ **Email:** _____

Fax: _____ **Date:** _____

Project Name: _____ **Application:** _____

Qty: _____ **Type: SK** _____

Gearbox Parameters

Unit

❍ Gearmotor
❍ Gearbox with Solid Input Shaft
❍ Gearbox with Motor Adapter
❍ Motor Only

Mounting Position

❍ M1 ❍ M4
❍ M2 ❍ M5
❍ M3 ❍ M6
❍ Special _____

Lubricant

❍ Standard
❍ Synthetic
❍ Food Grade
❍ Other _____

Shaft

❍ Solid Shaft, Diameter _____ ❍ inch ❍ mm

Shaft Location (For Bevel & Worm only)
❍ Shaft Side A
❍ Shaft Side B
❍ Shaft Side A & B

❍ Hollow Shaft, Diameter _____ ❍ inch ❍ mm

Flange

❍ None
❍ B14
❍ B5 Outside Diameter _____ [mm]

Ratio _____ : 1 or Output Speed _____ [rpm]

Output Torque _____ [lb-in] or Power _____ [hp]

Minimum Service Factor [f_b] _____ [lb]

Radial Load at Output Shaft [F_Q] _____ [lb]

Axial Load at Output Shaft [F_A] _____ [lb]

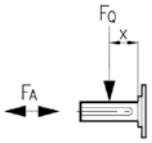

Distance from Shaft Shoulder [x] _____ [in]

Minimum Required Bearing Lifetime Lh10 _____ [hours]

Bearing Type

❍ Standard
❍ VL - Heavy Duty
❍ AL - Axial/Thrust
❍ VL2
❍ VL3
❍ VL4

Environmental Parameters

Ambient Temperature Range _____ °F to _____ °F

Location of Unit

❍ Indoor
❍ Outdoor
❍ Severe Environment

Paint

❍ Standard Stainless Steel Paint
❍ NSD+ (gray)
❍ NSD+W (white)
❍ NSD-X3 (gray)
❍ NSD-X3W (white)
❍ Casting Primed
❍ Special _____

Motor Parameters

Power _____ [hp]

Voltage & Frequency

❍ 230/460V-60Hz (460V only ≥ 40 hp)
❍ 575V-60Hz
❍ 208V-60Hz
❍ 400V-50Hz
❍ 115/230V-60Hz, 1 ph.
❍ Other _____

Enclosure

❍ IP55 (Standard)
❍ IP66

Insulation Class

❍ F (Standard)
❍ H

Duty

❍ S-1 Continuous Operation
❍ Periodic/Short Time Operation

Thermal Protection

❍ None
❍ Thermostat
❍ Thermistor

Cycles Per Hour _____ cycles/hour

Terminal Box Position

❍ TB1
❍ TB2
❍ TB3
❍ TB4

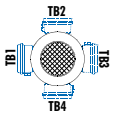

Conduit Entry Location

❍ CE I *
❍ CE II
❍ CE III *
❍ CE IV
* Brakemotor

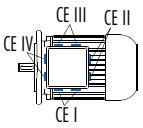

Brake Parameters

Brake

❍ No Brake (continue to next section)
❍ Holding Brake/Emergency Brake
❍ Working Brake

Brake Supply

❍ Line power from motor terminal block
❍ Separate Power Source

Brake AC Supply _____ [Volts]

Brake Torque _____ [Nm]

Brake Release

❍ Standard
❍ Fast

Brake Stopping

❍ Standard
❍ Fast
❍ Very Fast

Frequency Inverter Parameters

Frequency Inverter

❍ No Frequency Inverter
❍ Customer Supplied Inverter
❍ NORD Panel Mounted Frequency Inverter
❍ NORD Motor Mounted Frequency Inverter

Line Voltage: _____ [Volts] Frequency _____ [Hz]

Operating Frequency Range: _____ [Hz] to _____ [Hz]

How is the Inverter Controlled?

❍ PC
❍ Operator Control
❍ Other

Bus System?

❍ None
❍ Profibus
❍ CANBus
❍ AS Interface
❍ InterBus
❍ CANopen
❍ RS232

Are You Using an Encoder?

❍ No
❍ Yes → ❍ Position Feedback ❍ Speed Control

Send Quote Requests to info@automatedpt.com
Call +1(800)985-6929 To Order or Order Online At Nordgearmotors.com

Send Quote Requests to info@automatedpt.com
Call +1(800)985-6929 To Order or Order Online At Nordgearmotors.com

Mounting Positions

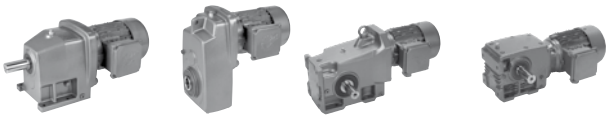

Mounting Positions

The reducer mounting position determines the approximate oil fill level and the appropriate vent location. In some cases mounting position may dictate possible variation in final reducer assembly. If considering any mounting positions that are not shown as catalog-standard options, it is critical that the customer consult with NORD prior to ordering.

In-line

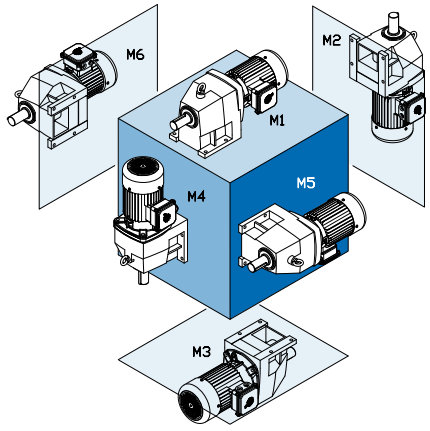

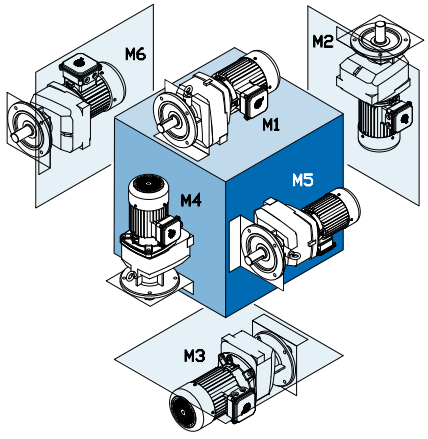

Clincher™

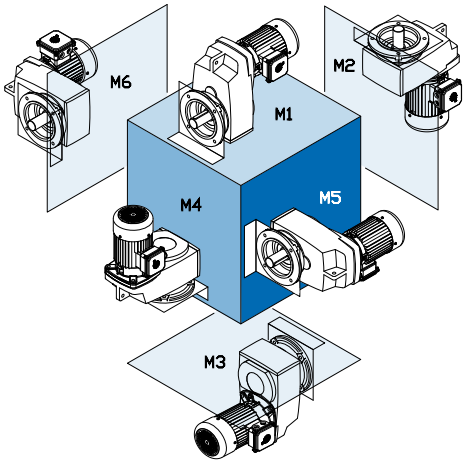

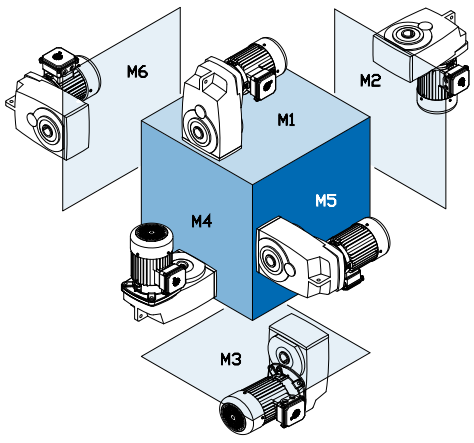

Right-Angle

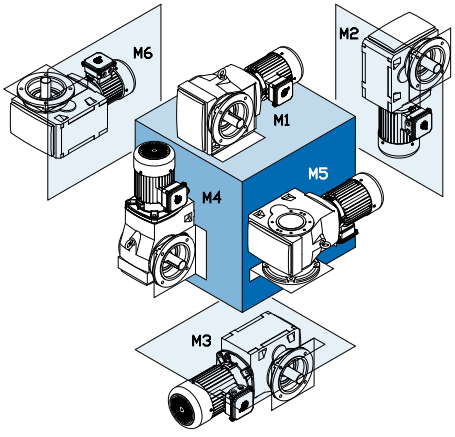

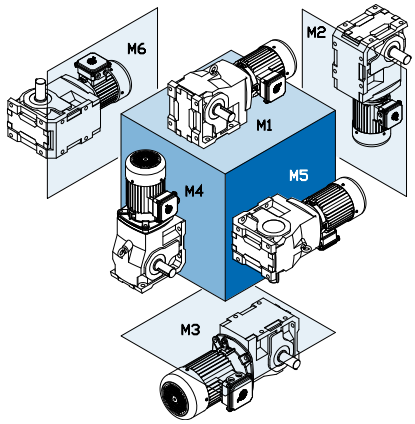

Send Quote Requests to info@automatedpt.com
Call +1(800)985-6929 To Order or Order Online At Nordgearmotors.com



Mounting Positions

Mounting Positions

The reducer mounting position determines the approximate oil fill level and the appropriate vent location. In some cases mounting position may dictate possible variation in final reducer assembly. If considering any mounting positions that are not shown as catalog standard options, it is critical that the customer consult with NORD prior to ordering.

New Mounting Position System

NORD is in the processes of changing mounting position systems. Historically the NORD mounting position system was based on international motor standards. NORD is changing in an effort to simplify the system. The new system is based on the six sides of a cube. Below is a cross reference between the old and new mounting position codes.

Mounting Position Cross Reference Table (old to new)

Helical Gear Units (In-line)		Parallel Shaft Gear Units (Clincher™)		Helical-bevel Gear Units		Helical-worm Gear Units	
Old	New	Old	New	Old	New	Old	New
B3	M1	H1	M1	B3	M1	B3	M1
B5	M1	H2	M3	B3I	M4	B3I	M4
B5I	M3	H3	M6	B5	M2	B5	M2
B5II	M5	H4	M5	B5I	M1	B5I	M1
B5III	M6	H5	M4	B5II	M4	B5II	M4
B6	M5	H6	M2	B5III	M3	B5III	M3
B7	M6			B6	M2	B6	M2
B8	M3			B6I	M1	B6I	M1
V1	M4			B6II	M4	B6II	M4
V3	M2			B8	M3	B8	M3
V5	M4			B8I	M2	B8I	M2
V6	M2			H1	M1	H1	M1
				H2	M3	H2	M3
				H3	M4	H3	M4
				H4	M2	H4	M2
				H5	M5	H5	M5
				H6	M6	H6	M6
				V1	M5	V1	M5
				V3	M6	V3	M6
				V5	M5	V5	M5
				V5I	M5	V5I	M5
				V6	M6	V6	M6
				V6I	M6	V6I	M6

Mounting Position Cross Reference Table (new to old)

Helical Gear Units (In-line)		Parallel Shaft Gear Units (Clincher™)		Helical-bevel Gear Units		Helical-worm Gear Units	
New	Old	New	Old	New	Old	New	Old
M1	B3, B5	M1	H1	M1	B3, B5I, B6I, H1	M1	B3, B5I, B6I, H1
M2	V3, V6	M2	H6	M2	B5, B6, B8I, H4	M2	B5, B6, B8I, H4
M3	B5I, B8	M3	H2	M3	B5III, B8, H2	M3	B5III, B8, H2
M4	V1, V5	M4	H5	M4	B3I, B5II, B6II, H3	M4	B3I, B5II, B6II, H3
M5	B5II, B6	M5	H4	M5	H5, V1, V5, V5I	M5	H5, V1, V5, V5I
M6	B5III, B7	M6	H3	M6	H6, V3, V6, V6I	M6	H6, V3, V6, V6I

Send Quote Requests to info@automatedpt.com
Call +1(800)985-6929 To Order or Order Online At Nordgearmotors.com

Mounting Positions

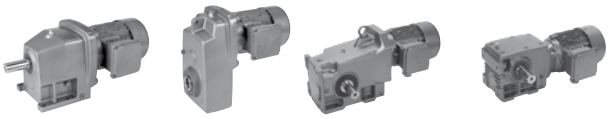

Mounting Configuration

NORD provides gearmotors, speed reducers and motors that can be configured very flexibly to suit customer needs. When ordering it is beneficial that the drive be specified exactly the way you want it delivered.

Mounting Positions

Basic mounting

❍ M1 ❍ M2 ❍ M3 ❍ M4 ❍ M5 ❍ M6

Right-angle with solid shaft

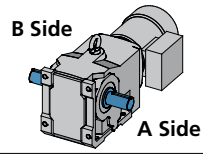

❍ Shaft Side A
❍ Shaft Side B
❍ Shaft Side A+B

Right-angle with shrink disc

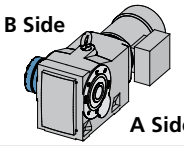

❍ Shrink Disc Side A
❍ Shrink Disc Side B

Right-angle flange mount units

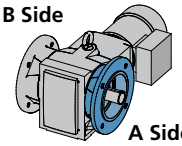

❍ Flange Side A
❍ Flange Side B
❍ Flange Side A+B

Right-angle with hollow shaft cover

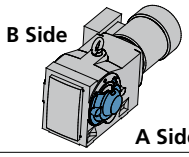

❍ Hollow Shaft Cover Side A
❍ Hollow Shaft Cover Side B

Right-angle with torque arm

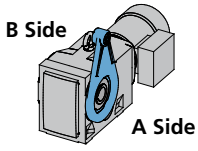

❍ Torque Arm Side A
❍ Torque Arm Side B

Shaft mount torque arm orientation

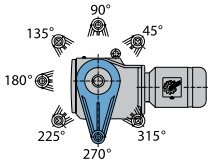

Orientation _____

92 - Bevel	90˚ - 315˚, Every 45°
90 - Bevel	45˚ - 270˚, Every 45°
Helical-worm	45˚ - 270˚, Every 45°
Helical-worm 02040	90˚, 180˚, 270˚, Every 90°

Bottom mount torque arm

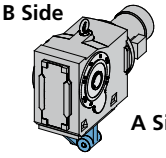

❍ Torque Arm Side A
❍ Torque Arm Side B

Brake motor with hand release lever

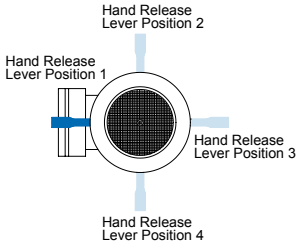

❍ Hand Release Lever Pos. 1
❍ Hand Release Lever Pos. 2
❍ Hand Release Lever Pos. 3
❍ Hand Release Lever Pos. 4

Terminal box location

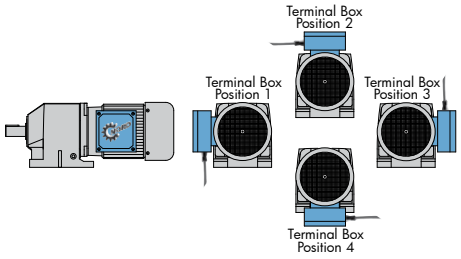

❍ Terminal Box Position 1 ❍ Terminal Box Position 3
❍ Terminal Box Position 2 ❍ Terminal Box Position 4

Conduit entry location

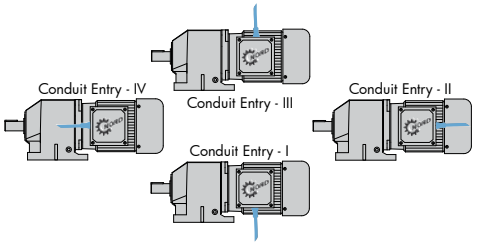

❍ Conduit Entry Location I* ❍ Conduit Entry Location III*
❍ Conduit Entry Location II ❍ Conduit Entry Location IV
* Denotes Brakemotor

Send Quote Requests to info@automatedpt.com
Call +1(800)985-6929 To Order or Order Online At Nordgearmotors.com

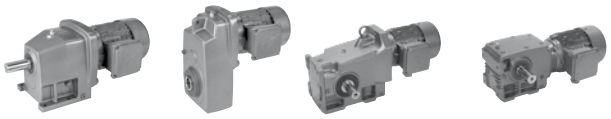

Gear Unit Options

Overview of available designs

Abbreviation	Description	Page	Helical in-line gear units	Clincher™ units	Bevel Units	Worm gear units
none	Solid shaft, foot mount	21	✓		✓	✓
none	Clincher with B14 on motor side	24		✓		
A	Keyed hollow shaft	21		✓	✓	✓
ADP	Additional drain plug	27	✓	✓	✓	✓
B	Fixing element kit	23		✓	✓	✓
D	Torque arm	22			✓❶	✓
DR	Autovent	27	✓	✓	✓	✓
E	Single stage	–	✓❷			
EA	Hollow shaft with spline	22		✓	✓	✓
F	B5 flange	20	✓	✓	✓	✓
FV	Filtered vent	27	✓	✓	✓	✓
G	Rubber buffers	23		✓		
H	Hollow shaft cover	23		✓	✓	✓
H66	IP66 hollow shaft cover	23		✓	✓	✓
K	Bottom mount torque arm	22			✓❸	
L	Double solid shaft	21		✓❹	✓	✓
LL	Long term storage	27	✓	✓	✓	✓
MDP	Magnetic drain plug	27	✓	✓	✓	✓
OA	Oil expansion chamber	24	✓	✓	✓	✓
OC	Oil cooler	24	✓	✓	✓	✓
OSG	Oil sight glass	27	✓	✓	✓	✓
OT	Oil reservoir tank	24		✓❺		
OV	Open vent	27	✓	✓	✓	✓
PR	B5 flange pilot removal	20	✓	✓	✓	✓
R	Backstop	24			✓	
RLS	Backstop in the W input	–	✓	✓	✓	✓
S	Shrink disc	21		✓	✓	✓
SCP	Screw conveyor package	29	✓	✓❻	✓❼	
SH	Shrink disc and cover	21 & 23		✓	✓	✓
SM5	Stainless steel output shaft	21	✓	✓	✓	✓
SWA	Special hollow shaft	22		✓	✓	✓
SWV	Special solid shaft	21	✓	✓	✓	✓
V	Solid shaft	21		✓	✓	✓
VG	Heavy duty rubber buffers	23		✓❽		
VI	(FKM) Fluoro-rubber seals	22	✓	✓	✓	✓
VL	Heavy duty output bearings	22	✓	✓	✓	✓
VL2	Spread bearing design	25		✓	✓	
VL3	Spread bearing design with oil safe dry cavity	25		✓	✓	
VL4	Drywell with heavy duty drop bearings	26		✓	✓	
VS	Heavy duty shrink disc	21		✓❾	✓❿	
WC	Water cooling cover	24		✓⓫	✓⓬	
X	Foot mount	20	✓	✓	✓	✓
XF	Foot mount with B5 flange	21	✓⓮			
XZ	Foot mount with B14 flange	21	✓⓮			
Z	B14 flange	20	✓⓭	✓	✓	✓
none	Paint coatings	28	✓	✓	✓	✓

✓ Available designs are marked with a checkmark

❶ Not available for SK 9082.1 and larger
❷ Available for SK11E - SK 51E
❸ Not available for SK 92072 - SK 92772
❹ Special shaft design
❺ Available for SK 9282 and larger
❻ Available for SK 1282SCP - SK 6382SCP
❼ Available for SK 9012.1SCP - SK 9053.1SCP
❽ Available for SK 7282 and larger
❾ Available for SK 7282, SK 8282, SK 9282, SK 11282
❿ Available for SK 9072.1 and larger
⓫ Available for SK 6282 and larger
⓬ Available for SK 9082.1 and larger
⓭ Available for SK 12 - SK 63
⓮ Available for SK 12 - SK 53

Send Quote Requests to info@automatedpt.com
Call +1(800)985-6929 To Order or Order Online At Nordgearmotors.com

Send Quote Requests to info@automatedpt.com Call +1(800)985-6929 To Order or Order Online At Nordgearmotors.com

Gear Unit Options



Inputs

NORD's modular design allows for many different types of inputs to be added to gear reducers. All inputs are bolt on and include machined pilots to ensure simple and accurate assembly. NORD offers the following different input types:

- Integral motor
- Solid input shaft
- NEMA C-Face motor adapter
- IEC B5 motor adapter
- Servo motor adapter
- Top mount motor platform
- Scoop mount motor platform
- Custom mounting interface

For more information on the inputs see the input section pages 673 - 687.

Mounting

NORD offers a number of different mounting arrangements including:

- Foot (X)
- B5 flange (F)
- B14 flange (Z)
- Shaft mount (A)
- Foot and B5 flange (XF)
- Foot and B14 Flange (XZ)

Foot Mounted (Blank or X)

Foot or base mounting is the most common method of reducer mounting. The speed reducer is secured in place with bolts or studs to a mounting base. Most often the reducer has mounting feet with through holes.

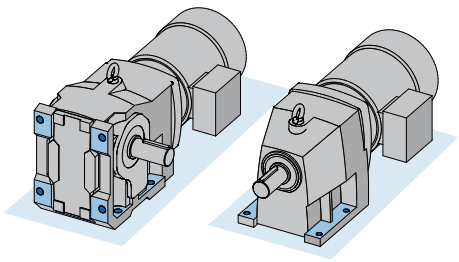

B5 Flange (F)

A B5 flange provides a simple, large diameter mounting flange with clearance holes and a centering pilot to firmly secure the speed reducer to the application. The B5 flange utilizes standard metric dimensions and is available for all NORD reducers. Many reducers offer a number of B5 flange diameters.

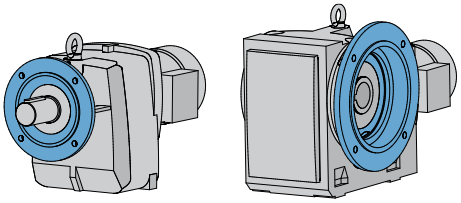

B5 Flange Pilot Removal (PR)

B5 flanges have a centering pilot machined onto the flange. In cases where there is not a matching counter bore or when the flange must sit flush to the mounting surface then the centering pilot must be removed. This pilotless flange is used to firmly secure the speed reducer to the application.

In some cases the matching surface already has a centering pilot and the use of a female pilot (counter bored flange surface) is recommended. Counter rotating drives are an example where a female pilot is frequently used.

B14 Flange (Z)

The NORD B14 flange consists of threaded holes and a centering pilot machined into the reducer housing. It is commonly used to secure the reducer to the application machine base or to mount many bolt on components such as a B5 flange, torque arm, or shaft cover. The B14 flange uses standard metric dimensions and allows a compact method of securing the reducer. This option is standard on all Clincher™ units and is available on all other NORD reducers.

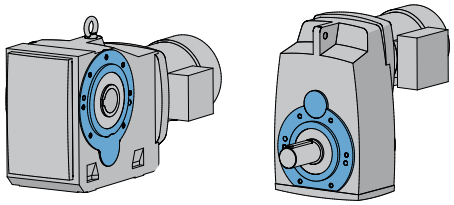

Send Quote Requests to info@automatedpt.com
Call +1(800)985-6929 To Order or Order Online At Nordgearmotors.com

Send Quote Requests to info@automatedpt.com Call +1(800)985-6929 To Order or Order Online At Nordgearmotors.com

Foot Mounted with B5 Flange (XF)

NORD can supply some foot mounted reducers with a B5 flange as well. These type XF reducers are designed to be foot and not flange mounted. The B5 flange is normally used to mount auxiliary equipment to the speed reducer. If the B5 flange is going to be used to mount the reducer, additional support will normally be required.

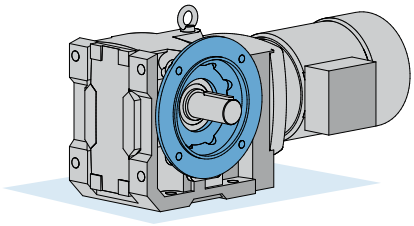

Foot mounted with B14 Face Flange (XZ)

NORD can supply some foot mounted reducers with a B14 face flange as well. These type XZ reducers are designed to be foot and not flange mounted. The B14 face flange is normally used to mount auxiliary equipment to the speed reducer. If the B14 face flange is going to be use to mount the reducer, additional support will normally be required.

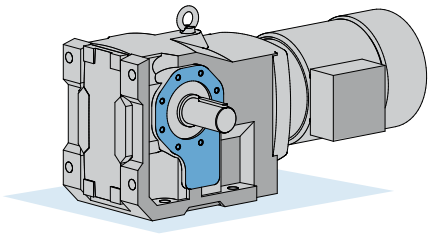

Shaft Options

Solid Shaft (Blank or V)

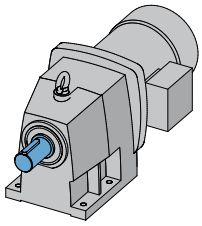

NORD's standard keyed solid shafts include a centered threaded hole. Shafts are available as inch or metric versions. The standard shaft material is 1045 or 4140 or equivalent.

Double Solid Shaft (L)

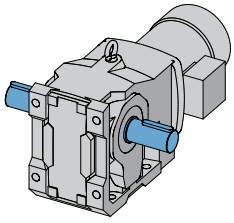

The standard solid shaft end is projected out both sides of the speed reducer. This option is commonly used to transfer torque out of both sides of the reducer or to mount a speed-monitoring device such as an encoder on one of the shaft ends. If you need the keyways to be alligned you must specify with NORD upon ordering

Keyed Hollow Shaft (A)

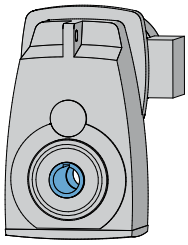

NORD's standard keyed hollow shafts are made from SAE 1045 high carbon steel. They feature standard keyway dimensions and are available both inch and metric designs. Many NORD reducers offer a variety of hollow shaft diameters.

Shrink Disc (S) (SH)

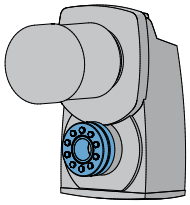

The shrink disc relies on the proven wedge principle to create a keyless, mechanical interference fit by converting locking screw tension into radial contact pressure on shaft and hub in effect "shrinking" it on to the customer shaft. Shrink discs result in a zero backlash mechanical interference fit that can accommodate high torque unlike other mounting technologies and will never wear or pound out, even for high cycle fluctuating and reversing loads.

Other shrink disc advantages include:

- Elimination of fretting corrosion associated with key connections.
- Generous clearance for easy mounting & dismounting.
- Allow for larger bores sizes compared to keyed hollow shafts.
- For more information see page 72

Heavy Duty Shrink Disc (VS)

NORD heavy duty shrink discs offer increased clamping force and safety factor for severe applications.

Special Shafts & Shaft Materials

Stainless Steel Output Shaft (SM5)

Output shafts made from stainless steel are available and are frequently used in food, pharmaceutical, and washdown applications. In some cases solid input shafts can also be provided in stainless.

Special Solid Shaft (SWV)

Special solid shaft diameters and lengths can be provided for a nominal price adder. Special features are also available including keyless shafts, cross drilled shafts or special threaded taps. Different shaft materials are also available. NORD has in-house drafting design and machining departments so we can provide special requirements in short lead times. Specify your shaft requirements and NORD will verify the design feasibility.

Send Quote Requests to info@automatedpt.com
Call +1(800)985-6929 To Order or Order Online At Nordgearmotors.com

Send Quote Requests to info@automatedpt.com
Call +1(800)985-6929 To Order or Order Online At Nordgearmotors.com

Gear Unit Options



Special Hollow Shaft (SWA)

Special hollow bore shafts can also be provided. Special hollow bore shafts can be provided with special diameters, multiple keyways, and even special extended hollow shafts that are frequently used with counter rotating drives. Different shaft materials are also available. Specify your shaft requirements and NORD will verify the design feasibility.

Hollow Shaft with Spline (EA)

Hollow shafts with a metric involute spline profile according to DIN 5480 are available for some NORD hollow shaft reducers. These spline shafts are commonly used on crane travel drives. See pages 573 & 671 for details.

Heavy Duty Output Bearings (VL)

Replacing standard output bearings with heavy-duty versions will increase the external load carrying capacityof the speed reducer. Increased capacity in either or both overhung (radial) or thrust (axial) loading insures that premature bearing failure will not occur due to high stresses in the bearing elements. The increased bearing capacity will also keep the speed reducer as small as possible by not having to select the next larger case size in order to handle the bearing loads. If increased bearing life is desired, larger bearings will reduce the relative stress on the bearings and increased B10 bearing life.

(FKM) Fluoro-rubber Seals (VI)

TheNORDstandardoilsealsaremadeofNitrileorrubber and are rated for temperatures up to 125°C or 250°F. If ambient or oil temperatures rise above this level NORD recommends using fluoro-rubber (also called FKM) oil seals. FKM seals are rated from -30°F to 400°F (-35°C to 200°C).

Torque Arm (D)

A torque arm is a compact, simple way to secure a shaft mounted reducer. It is bolted onto the reducers B14 flange. The tear drop shaped torque arm has a rubber bushing located at the fastening hole-end to act as a shock absorber to dampen out peak shock loads.

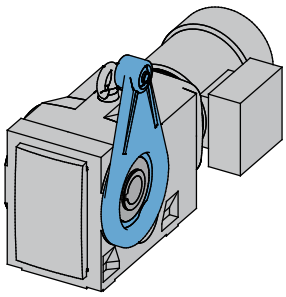

Specify the torque arm location and orientation when ordering

Torque arm location
Torque arm orientation
See Page 18 for details

Bottom Mount Torque Arm (K)

A torque arm is a compact, simple way to secure a shaft mounted reducer. It is bolted onto the base of the reducer. The torque tab has a rubber bushing located at the fastening hole-end to act as a shock absorber to dampen out peak shock loads.The torque tab is available for bevel units SK 90.1.

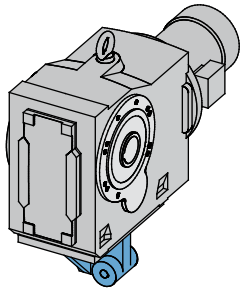

Specify the torque tab location when ordering

Torque tab location
See Page 18 for details

Send Quote Requests to info@automatedpt.com
Call +1(800)985-6929 To Order or Order Online At Nordgearmotors.com

Send Quote Requests to info@automatedpt.com
Call +1(800)985-6929 To Order or Order Online At Nordgearmotors.com

Rubber Buffers (G)

Two rubber buffers are installed on the integral torque tab located on the Clincher™ & on the torque bracket of the larger Bevel units to dampen torsional shock loads delivered to the reducer. The use of rubber buffers can increase the reducer's service life by reducing cumulative torsional shock loads. For further dampening, several rubber buffers may be used in a row. For dimensions see page 387.

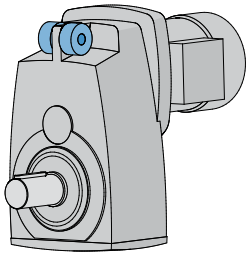

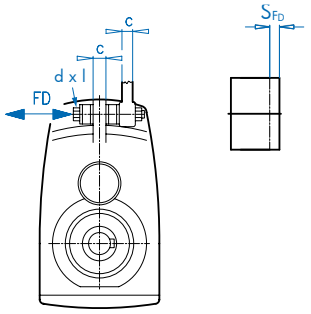

FD = Force working on the rubber buffer [lb]
d x l = Diameter x length
c = Thickness
$\mathbf{S_{FD}}$ = Distance buffers compress at force (FD)

CAUTIONS

When installing, rubber buffers should be tightened until free play between the contact surface is eliminated.

Heavy Duty Rubber Buffers (VG)

Heavy duty rubber buffers are also available on Clincher™ reducer sizes SK7282 to SK12383. These heavy duty buffers provide the same benefits as the standard "G" buffers but are usable in more severe shock applications.

CAUTIONS

When installing, rubber buffers should be tightened until free play between the contact surface is eliminated.

Hollow Shaft Cover (H)

An optional cover can be used to guard from rotating hollow output shafts. It also protects the output shaft seals against dust and dirt particles and in some cases can be sealed against moisture and dust.

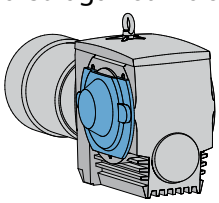

Shrink Disc Cover (SH)

The shrink disc cover is required with all shrink disc units and provides protection from the rotating shrink disc.

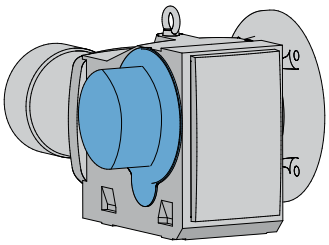

IP66 Hollow Shaft Cover (H66)

NORD provides hollow shaft covers with IP66 enclosure protection (protection against dust and water jets) to completely seal the rotating hollow shaft from moisture and debris.

NOTE: Cover location is required for 90 series bevel units

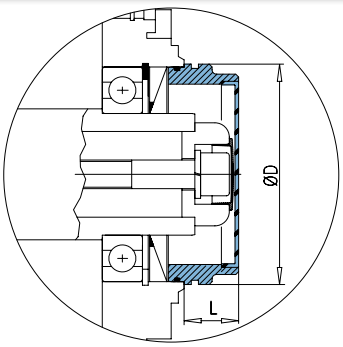

Fixing Element Kit (B) (shaft shoulder fixed and snap ring fixed)

Due to the slight oscillations inherent in any rotating shaft, NORD offers an optional "fixing element kit". This is a method to prevent the reducer from "walking out" of position. The kit includes all necessary parts to secure the shaft in the axial direction by using a tapped hole in the end of the mating male shaft.

There are two methods for securing the fixing element kit. The first involves pulling the customer supplied male shaft to the snap ring (type 1) and the second method the customer supplied shaft is shouldered (type 2) and pulled against the hollow shaft and not the snap ring.

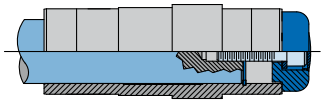

Snap Ring Fixed (Type 1)

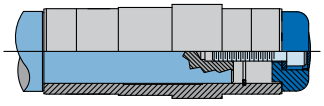

Shaft Shoulder Fixed (Type 2)

Send Quote Requests to info@automatedpt.com
Call +1(800)985-6929 To Order or Order Online At Nordgearmotors.com

Gear Unit Options

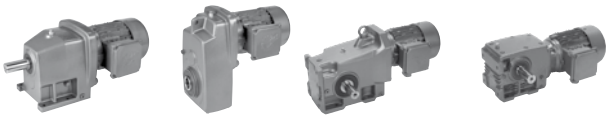

Backstop (R)

The anti-rotation backstop only allows rotation in one direction. NORD's backstop is installed internally to the reducer and will hold the speed reducer's rated torque.

The 90 series bevels can be built with internal backstops. Additionally, units with W-input cylinders and NORD motors frame size 80 and larger offer integral backstops.

The direction of rotation is required when ordering a unit with a backstop. Please reference the drawings below.

Specify the direction of allowable rotation when ordering.

Clockwise (CW) or Counter-Clockwise (CCW) _____

Right-angle units viewed from side A or side B.

Backstop illustrations

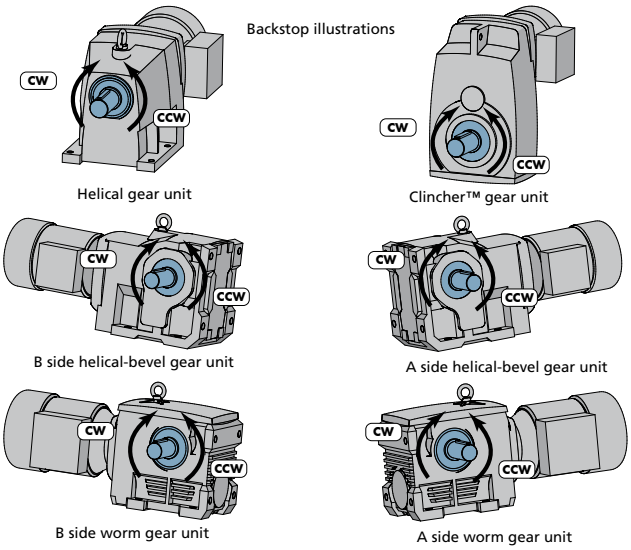

WARNING

When a gear unit or a motor includes a backstop, check the motor and gear direction of rotations before starting the system. Attempting to operate the unit in the wrong direction may cause damage.

Clincher with B14 on motor side

As an option, Clincher™ reducers can be supplied with an additional B14 flange on the motor side.

Oil Expansion Chamber (OA)

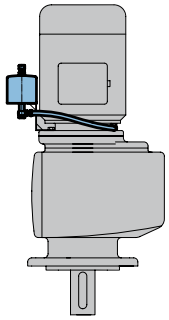

Oil expansion chambers are available for most reducers. These chambers allow for expansion of the oil-air mix in the reducer that can occur during operation. This expansion chamber is similar to a car radiator over-flow chamber. See page 39 for additional details and selection guidelines.

Oil Reservoir Tank (OT)

The oil reservoir tank allows the reducer housing to be completely filled with oil. The tank always contains oil and is above the reducer oil sump, which allows the reducer to be completely filled with oil. See page 40 for additional details and selection guidelines.

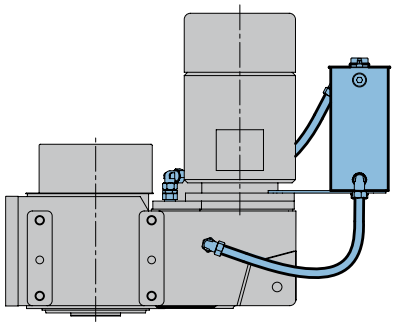

Oil Cooler (OC)

The cooler is an external device to cool the reducer's lubricating oil. In some applications it is necessary to provide oil coiling to ensure the oils maximum operating temperature is not exceeded. See page 41 for additional details and selection guidelines.

Water Cooling Cover (WC)

A water cooling plate is an alterative to an oil cooler in some situations. The larger Clincher™ and Bevel units can be fitted with a water cooling plate to cool the reducer's oil reservoir. See page 40 for additional details and selection guidelines.

Send Quote Requests to info@automatedpt.com
Call +1(800)985-6929 To Order or Order Online At Nordgearmotors.com

Send Quote Requests to info@automatedpt.com
Call +1(800)985-6929 To Order or Order Online At Nordgearmotors.com

VL2 – Spread Bearing Design

NORD offers reinforced output shaft bearings with increased bearing distance. The lower bearing is a oversized, double row spherical bearing, which absorbs high overhung and thrust loads while providing a longer bearing service life. The spherical roller bearing is especially useful in compensating for alignment errors in long agitator shafts. The VL2 spread bearing design is commonly used for shredders, mixers, overhead conveyors or applications requiring increased bearing load carrying capacities. Included with the VL2 design is a grease fitting for the lower bearing and a removable plug to allow excess grease to purge from the bearing cavity.

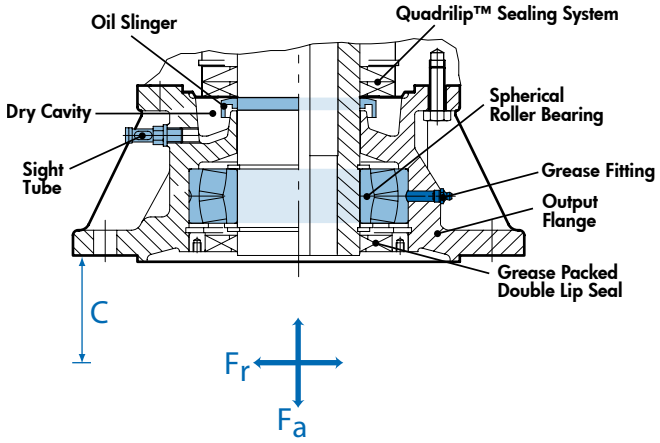

VL3 – Spread Bearing Design with Oil Safe Dry Cavity

The VL3 dry cavity design adds additional oil leak protective measures to the VL2 spread bearing design. NORD's Quadralip™ sealing system prevents oil from leaking from the gearbox into the VL2 flange. If in any case oil does leak past the Quadralip™ seals, it would flow down to the oil slinger mounted onto the shaft. As the shaft rotates, the oil will sling off into the dry cavity. A sight tube is provided for dry cavity inspection. At the bottom of the spread bearing flange is greased packed, double lip seal.

NORD can calculate the service life upon request. The following values are required for calculation:

• Rated Power	**P**	[hp]
• Output Speed	**n_2**	[rpm]
• Overhung Force	**F_r**	[lb]
• Axial Force (thrust)	**F_a**	[lb]
• Distance from the point of overhung force to the flange support	**C**	[in]
• Required Service Life	**L_h**	[h]

Clincher™ Shaft Mount Gear Unit Motors

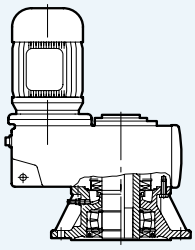

SK ..82 AF VL2
SK ..82 AF VL3 in ⇨ 384

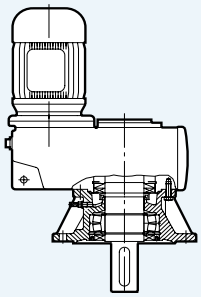

SK ..82 VF VL2
SK ..82 VF VL3 in ⇨ 385

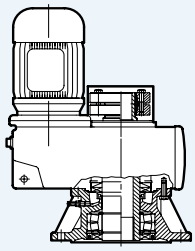

SK ..82 AFSH VL2
SK ..82 AFSH VL3 in ⇨ 386

Helical-Bevel Gear Unit Motors

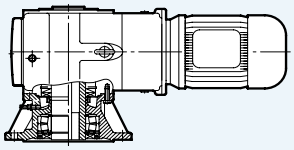

SK 90..1 AF VL2
SK 90..1 AF VL3 in ⇨ 562

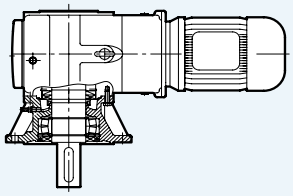

SK 90..1 VF VL2
SK 90..1 VF VL3 in ⇨ 563

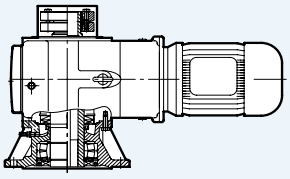

SK 90.1 AFSH VL2
SK 90.1 AFSH VL3 in ⇨ 564

Send Quote Requests to info@automatedpt.com
Call +1(800)985-6929 To Order or Order Online At Nordgearmotors.com

Send Quote Requests to info@automatedpt.com
Call +1(800)985-6929 To Order or Order Online At Nordgearmotors.com

Gear Unit Options

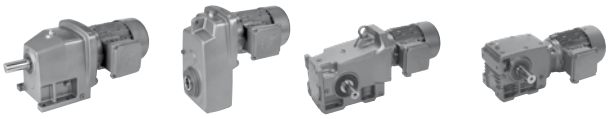

Drywell with Heavy Duty Drop Bearings VL4

NORD offers a high capacity drop bearing drywell units in our Clincher™ offset parallel and right-angle helical-bevel. These True Drywell designs provide the high capacity bearings design of the VL2/VL3 units together with a drywell design.

Drywell Design

A drywell design isolates the low-speed output shaft from the gear unit's oil sump to prevent oil sump lubricant from leaking thought the output area. A drywell design physically separated the oil sump lubrication form the rotating output shaft.

NORD's Superior Drywell

NORD's stationary oil dam tube extends vertically above the top of the gear unit housing. Most other drywell designs simply have a small oil dam tube inside the gear unit's slightly above the oil sump level. NORD's drywell design provides a much higher degree of leak safety. Additionally NORD provides a sealing o-ring at the top of the oil dam for maximum protection.

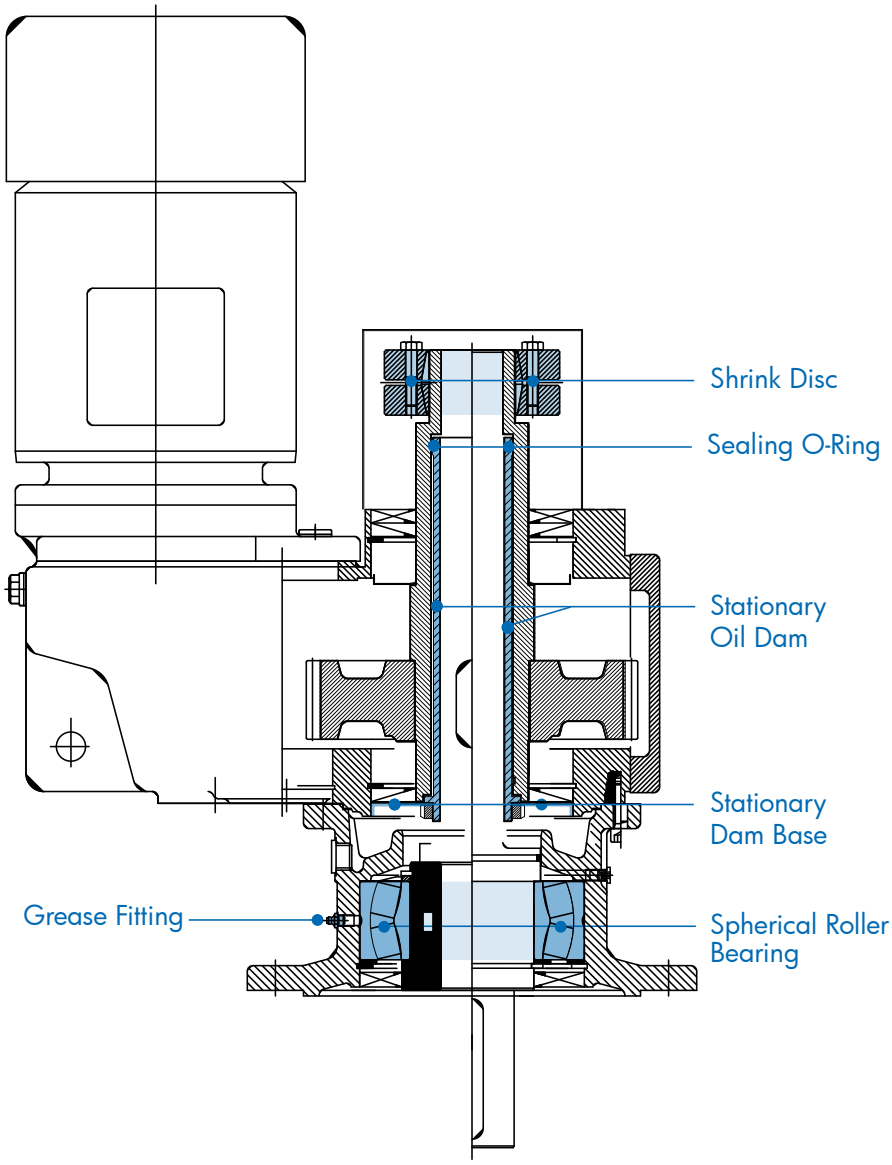

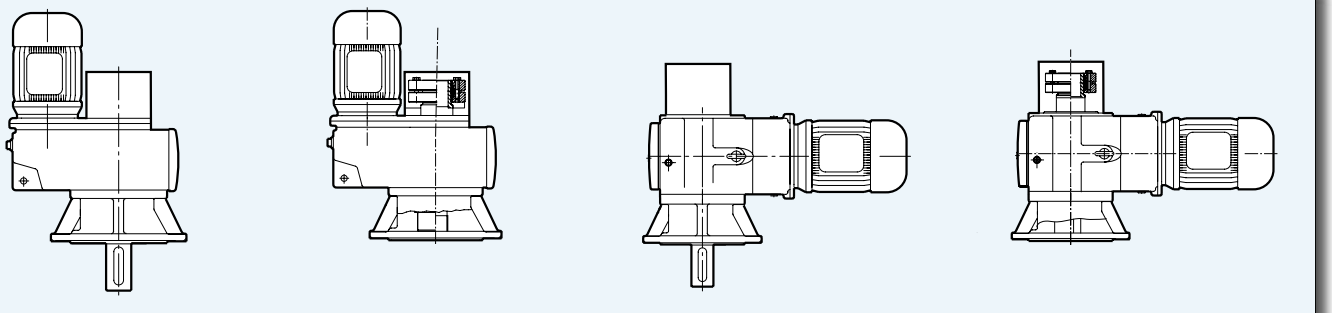

SK ..82 VF VL4 | SK ..82 AFSH VL4 | SK 90..1 VF VL4 | SK 90.1 AFSH VL4

Send Quote Requests to info@automatedpt.com
Call +1(800)985-6929 To Order or Order Online At Nordgearmotors.com

Send Quote Requests to info@automatedpt.com Call +1(800)985-6929 To Order or Order Online At Nordgearmotors.com

Oil Sight Glass (OSG)

The oil sight glass provides a visible oil level indication on the reducer. The sight glass replaces the standard steel fill plug and consists of a sealed clear porthole centered in the middle of a brass plug. The sight glass allows for quick oil level and color inspection.

Autovent™ (DR)

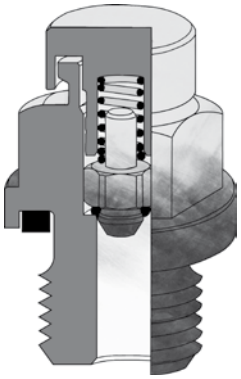

The AUTOVENT™ helps prevent bearing and gear damage by behaving like a check valve to block the entry of foreign material and prevent lubrication contamination from dust particles, moisture and air-borne process chemicals. The breather opens at approximately 0.3-0.9 psi during operation and closes tightly as the gearbox cools. This option is perfect for humid conditions and wash-down environments, helping to maintain proper oil cleanliness, while reducing foaming and oxidation.

Open Vent (OV)

An open vent can be optionally supplied on NORD reducers. The open vent allows for air pressure differences between the inner space of the reducer and the atmosphere. This open vent will be closed upon delivery to prevent oil leakage. Before the reducer is put in service the open vent should be activated by removing the sealing plug.

Filtered Vent (FV)

NORD offers a filtered vent, which allows gases to permeate, but does not allow dust and debris to pass through the vent.

Magnetic Drain Plug (MDP)

Magnetic drain plugs attract and hold ferrous metal particles that may circulate inside the reducer's lubrication system. These potentially abrasive particles may cause excessive wear in the reducer if they remain circulating. An increase of collected material may be a warning sign of future problems.

Special Drain Plugs



NORD oil drain valves are offered to make draining the oil from the gearbox clean and easy. The drain hose needs to be supplied by the customer. The hose fittings are offered in either 90° or straight to accommodate the user.

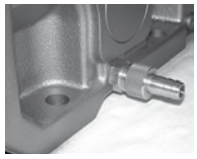

A brass drain valve is threaded into the existing oil drain port of the gearbox. The spring valve is closed using a rubber o-ring. When the hose fitting is threaded into the drain valve, the spring valve is pushed open and allows oil to drain. When the hose fitting is removed, the drain valve closes. A brass, threaded cap is supplied to cover the drain valve when not in use.

Additional Drain Plug Hole (ADP)

NORD can add an additional drain hole to the reducer housing for a small surcharge if required for special oil plumbing needs.

Long Term Storage (LL)

Speed reducers are frequently put in storage prior to installation for long periods of time and in some cases exposed to the elements. NORD's long term storage option protects the unit from moisture or corrosion by coating all unpainted surfaces with a dry, transparent, durable waxy film. Once installation is necessary this waxy film can be easily removed with a commercial de-greaser or petroleum solvent. If possible the store room should be vented and dry, with room temperatures between 23°F and 104 °F (-5 °C and 40 °C).

Send Quote Requests to info@automatedpt.com
Call +1(800)985-6929 To Order or Order Online At Nordgearmotors.com

Gear Unit Options



Paint Coatings

NORD's standard paint coating is a two component, aliphatic polyurethane finish contaning 316 stainless steel material.This gray stainless steel paint has excellent appearance and outstanding physical properties. It is suitable for both indoor and outdoor applications.

Advantages of NORD's stainless steel two component polyurethane:

- Excellent adhesion to cast iron, aluminum, steel, and plastics
- Excellent corrosion resistance
- Excellent chemical resistance
- Excellent gloss and color retention
- Suitable for indoor and outdoor exposure
- Nonporous and excellent abrasion resistance
- Suitable for use in a USDA inspected facility

NORD also offers a variety of severe duty paint coatings that provide a high level of protection against water and severe environments both indoors and outdoors. NSD+ (NORD Severe Duty) consists of a primer undercoat and a stainless steel polyurethane topcoat. For the most demanding environments, NORD offers NSD-X3 (NORD Severe Duty triple coated) which consists of a primer undercoat, stainless steel polyurethane coating, and a clear topcoat. Paint coatings are also available in alternate colors as seen in the table below.

Additionally a variety of coating options are available including our Severe Duty coatings:

Finish	Color	Coating	Use
Standard (stainless steel paint)	Stainless steel silver (Gray)	1 x Stainless steel (316) top coat (polyurethane)	Indoor or outdoor moderate environment
Alternate color	Black, Blue, Red, Orange	1 x Color top coat (polyurethane)	Indoor or outdoor protected
NSD+			
NORD Severe Duty + NSD+	Stainless steel silver (Gray)	1 x Primer high solid alkyd system 1 x Stainless steel (316) top coat (polyurethane)	Indoor or outdoor moderate environment
NORD Severe Duty +W NSD+W	White	1 x Primer high solid alkyd system 1 x White top coat (polyurethane)	Indoor or outdoor moderate environment
Alternate color NSD+	Black, Blue, Red, Orange	1 x Primer high solid alkyd system 1 x Color top coat (polyurethane)	Indoor or outdoor moderate environment
NSD X3			
NORD Severe Duty Extreme NSD-X3	Stainless steel silver (Gray)	1 x Primer high solid alkyd system 1 x Stainless steel (316) (polyurethane) 1 x Clear top coat (polyurethane)	Indoor or outdoor more severe environment
NORD Severe Duty Extreme NSD-X3W	White	1 x Primer high solid alkyd system 1 x White (polyurethane) 1 x Clear top coat (polyurethane)	Indoor or outdoor more severe environment
Alternate color NSD-X3	Black, Blue, Red, Orange	1 x Primer high solid alkyd system 1 x Color (polyurethane) 1 x Clear top coat (polyurethane)	Indoor or outdoor more severe environment

Special colors and paints possible please contact NORD with your specific requirements.

Send Quote Requests to info@automatedpt.com
Call +1(800)985-6929 To Order or Order Online At Nordgearmotors.com

Send Quote Requests to info@automatedpt.com Call +1(800)985-6929 To Order or Order Online At Nordgearmotors.com

Clincher™ Screw Conveyor Package (SCP)

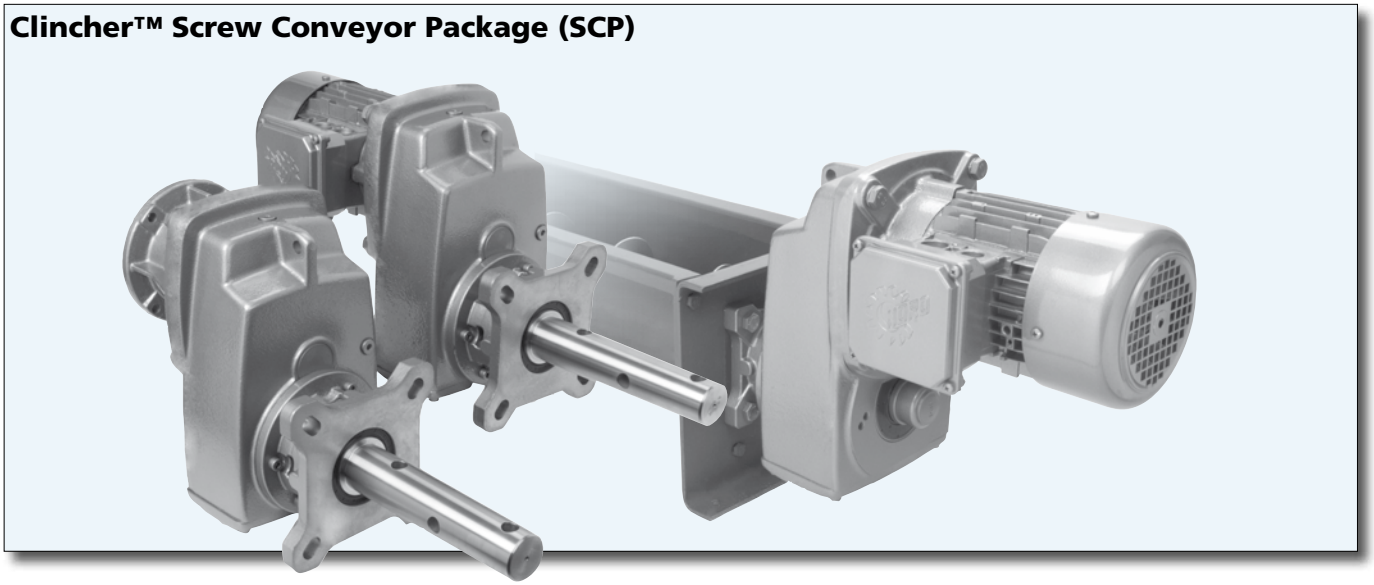

Screw Conveyor Package (SCP)

The NORD screw conveyor package (SCP) provides a complete power transmission for screw conveyors. It is extremely efficient due to the elimination of costly v-belt drives and by providing integral gearmotors or direct coupled motors to a NEMA C-face reducer. Efficiency can be increased even further by applying the NORD "H" line of energy efficient motors. The SCP package also features a superior sealing system and mounting features.

For more information see our G1129 catalog.

Optimized Sealing System

- Dual (FKM) lip seals
- Grease impregnated packing seal
- Dual gap seals (excludes particles) – 0.03" gap
- Material evacuation ports
- Shaft material ditch
- Quadrilip™ sealing

Mounting

- Standard CEMA mounting
- Versatile flange – multiple bolt patterns
- 3-Hole tapered CEMA drive shaft
  - Easy mounting & Removal
- Reduced bearing loads – tapered shaft allows for screw pipe misalignment
- Quick external removal feature

Model type	Max Torque	Ratio Range	Speed Range	Gear Stages	Eff.	CEMA Drive Shaft Diameter				
	[lb-in]	[x:1]	[rpm]		[%]	1-1/2"	2"	2-7/16"	3"	3-7/16"
SK1282SCP	2620	4.79 - 109.5	365 - 16	2	97	X	X	X		
SK1382SCP	2425	87.94 - 624.45	20 - 2.8	3	95	X	X	X		
SK2282SCP	4611	4.51 - 127.51	388 - 14	2	97	X	X	X		
SK2382SCP	4894	82.22 - 763.41	21 - 2.3	3	95	X	X	X		
SK3282SCP	8363	4.48 - 112.23	391 - 16	2	97	X	X	X	X	
SK3382SCP	9195	89.60 - 1022.42	20 - 1.7	3	95	X	X	X	X	
SK4282SCP	16089	4.7 - 155.4	372 - 11	2	97		X	X	X	
SK4382SCP	18381	86.83 - 1585.08	20 - 1.1	3	95		X	X	X	
SK5282SCP	28630	4.32 - 134.03	405 - 13	2	97		X	X	X	X
SK5382SCP	28320	82.72 - 1367.08	21 - 1.3	3	95		X	X	X	X
SK6282SCP	40152	4.39 - 80.33	399 - 22	2	97				X	X
SK6382SCP	53100	24.42 - 551.58	72 - 3.2	3	95				X	X

Send Quote Requests to info@automatedpt.com
Call +1(800)985-6929 To Order or Order Online At Nordgearmotors.com

Gear Unit Options



Overhead Conveyor Drives

The NORD SK9055 and SK9155 Conveyor Drive reducers are designed to be a mounting flange and output shaft drop-in for existing Overhead Conveyor Drives. The NORD Conveyor Drives, like our standard industrial products, offer heavy-duty construction and precisely machined components. By adding a mounting pad, the standard NORD unit becomes an intelligent drop-in product.

Conveyor drives incorporate the standard NORD VL3 flange, which features a spread bearing design with oil safe dry cavity.



Ratings

NORD uses the standard gearing and housings for these Conveyor Drives. By doing this, we are able to offer the wide range of ratios, high torque, overhung and thrust load capacities.

Power Input

Conveyor drives are able to accept different types of power inputs, including integral or C-face motors and solid input shafts.

For more information see our G1043 catalog.

Unit Size	Integral Motor Range	C-Face Motor Range	Ratio	Max Torque [lb-in]	Overhung Load [lb]	Thrust Load [lb]
SK9055	0.33hp – 30hp	56C – 250TC	8.83 – 4246.38	24780	6000	3000
SK9155	0.75hp – 60hp	56C – 360TC	8.66 – 4319.55	72570	16000	5000

Spread Bearing Design with Oil Safe Dry Cavity

The dry cavity design adds additional oil leak protective measures to the spread bearing design. NORD's Quadralip™ sealing system prevents oil from leaking from the gearbox into the flange. If in any case oil does leak past the Quadralip™ seals, it would flow down to the oil slinger mounted onto the shaft. As the shaft rotates, the oil will sling off into the dry cavity. A sight tube is provided for dry cavity inspection. At the bottom of the spread bearing flange is greased packed, double lip seal.

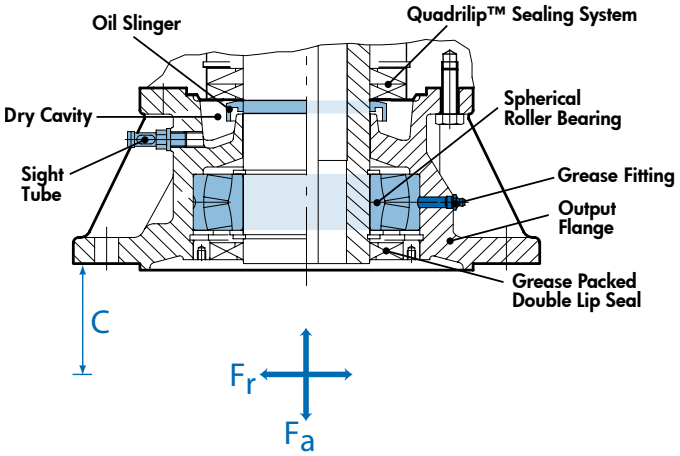

Send Quote Requests to info@automatedpt.com
Call +1(800)985-6929 To Order or Order Online At Nordgearmotors.com

Send Quote Requests to info@automatedpt.com
Call +1(800)985-6929 To Order or Order Online At Nordgearmotors.com

Counter Rotating Drives

Often mixing tanks use a dual agitation system. For example, a scraper blade rotates in one direction along the sides and bottom, while a turbine blade rotates in the opposite direction in the middle of the tank.

Nord can provide an economical, compact drive system to perform this function. A standard hollow bore reducer is used as the top drive that rotates the turbine. This drive may have a standard B5 output flange slightly modified to fit the mating B14 flange on the bottom reducer. Or, in some cases, it may be necessary to use an adapter plate between the two units in order to match the flanges. The top drive can be any hollow bore reducer, such as a helical shaft mount, a helical-bevel, or a helical-worm reducer.

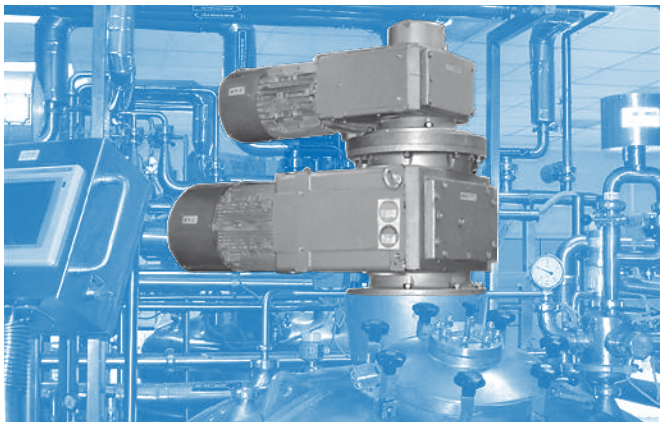

For stacked-mixer applications, a bore differential between the two units is essential. Thus, it is necessary to have a larger diameter on the lower unit and a smaller diameter on the upper unit. Nord can provide the upper unit with a smaller bore by using an "AXF" style bevel. Likewise, Nord can supply a larger alternate bore on several of the "AZ" or "AF" style bevels for the lower unit.

If the bore differential is still not sufficient when using an "AXF" on top with a larger bore on bottom, Nord can provide a special hollow shaft for the lower gearbox. This shaft has no inner keyway. The shaft extends below the gearbox and has an outer keyway onto which the customer can mount a coupling. This shaft is similar to a solid shaft except that it has a hollow bore running through it.

Since the mixer components usually require final positioning adjustment, Nord units can be supplied with a keyless shrink disc attachment on the upper unit. This method allows for easy installation and adjustment. It also greatly facilitates disassembly and eliminates fretting corrosion.

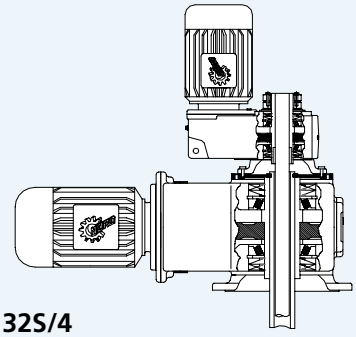

SK5282AFSH-132S/4
+ SK9082.1AF-160M/4

- Flange used on bottom of lower gearbox (optional).
- Adapter plate needed between gearboxes.
- Shrink disc on top gearbox
- Taper bearings on top gearbox

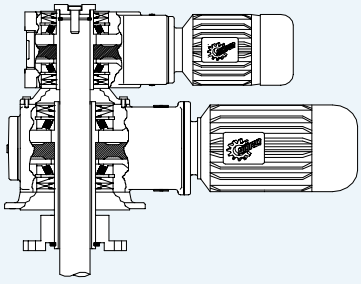

SK9052.1AXF-160M/4 (top)
+ SK9072.1AF-132M/4 (bottom)

- Flange used on bottom of lower gearbox (optional).
- No adapter plate needed between gearboxes.
- Taper bearings standard on both units.
- Special extended hollow shaft with externally mounted coupling.

Send Quote Requests to info@automatedpt.com
Call +1(800)985-6929 To Order or Order Online At Nordgearmotors.com

Send Quote Requests to info@automatedpt.com Call +1(800)985-6929 To Order or Order Online At Nordgearmotors.com

ATEX Information

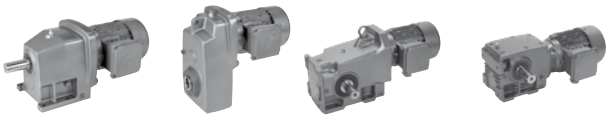

ATEX Explosion Protection for the European Union

The term ATEX is derived from an old French directive titled "ATmospheres EXplosives" and is used to help protect people and equipment from potential explosive hazards. Explosive environments are usually the product of oxygen mixing with ignitable gases or airborne or settled ignitable dust. Gear drive systems may operate in areas with potentially explosive gas-air and dust-air mixtures; therefore NORD manufactures drive systems with special explosion protection to safely operate in these potentially dangerous environments.

Integrated explosion protection indicates measures should be taken to:

- Prevent the development of potentially explosive environments
- Avoiding ignition of potentially explosive environments
- Limit the impact of an explosion to safe confines

In 1994 the European Parliament issued EU directive 94/9/EC commonly called the "equipment or product directive", which regulates the legal requirements for equipment and protective systems intended for use in potentially explosive environments. Another directive was also created called the "worker protection directive" 1999/92/EC to protect workers and workplace property.

Product Directive 94/9/EC

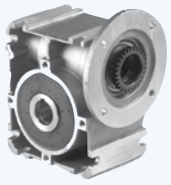

Defines the equipment and certification requirements of the equipment builder. Specifically equipment builders are required to label their products by categories according to ignition risks in a potentially explosive environment.

Workers Protection Directive 1999/92/EC

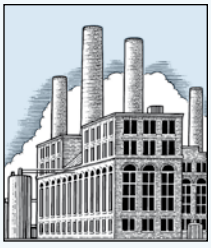

Defines the duties of the end user. Specifically the end user has to specify hazardus areas within a plant or property called zones.

Some of the basic safety requirements met by this standard are listed below

Standards for electrical equipment:

- DIN EN 60079-0 General Requirements
- DIN EN 60079-1 Flameproof enclosure "d"
- DIN EN 60079-7 Increased safety "e"
- DIN EN 60079-15 Non-sparking "n"
- DIN EN 50281 Combustible dust

Standards for mechanical equipment:

- EN 13463 Series of standards
- EN 13463-1 Basic method
- EN13463-5 Constructional safety

Comparison between ATEX and North American Explosion Protection

ATEX directive 94/9/EC for explosion proof application is a mandatory requirement throughout the European Union and many other countries have adopted the directive as well. The ATEX directive is not required for North American installations, which use the Class/Division standard set by NEC/CEC.

The two systems are not easily compared since they were developed independently, but they both have been proven to be effective safety systems for use in hazardous areas. The Class/Division system is more straightforward by leaving little interpretation to the classification and which electrical materials can and cannot be used. The ATEX method allows for more application solutions because equipment is marked by its protection type and the user bears the responsibility to apply the proper equipment protection in each zone. ATEX also requires mechanical component protection like gear units, where the Class/Division system does not.

Send Quote Requests to info@automatedpt.com
Call +1(800)985-6929 To Order or Order Online At Nordgearmotors.com

Send Quote Requests to info@automatedpt.com Call +1(800)985-6929 To Order or Order Online At Nordgearmotors.com

ATEX Definitions

Group

The ATEX directive distinguishes between two equipments groups. Group I applies to equipment intended for use in mines and Group II applies to all other areas or the surface industry. NORD offers drives for Group II.

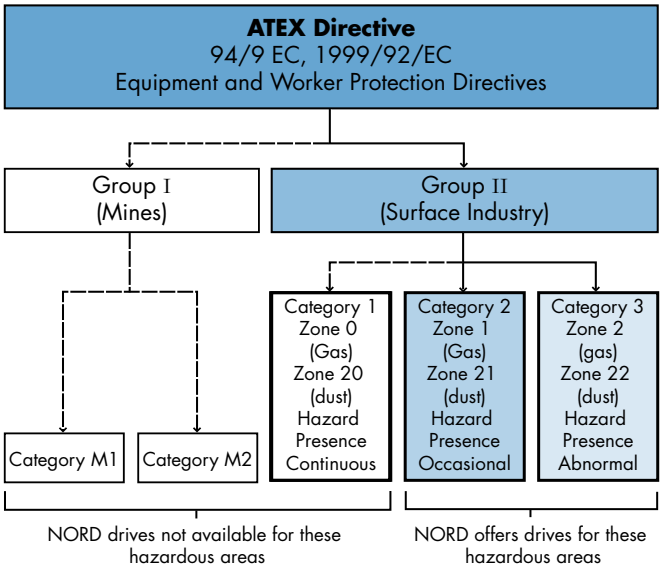

Category

The equipment category distinguishes the level of equipment protection needed and if the protection is for gas-air or dust-air mixtures. ATEX distinguishes three category levels; 1, 2 and 3 based upon the duration of exposure to a potentially explosive atmosphere with category 1 being the most dangerous.

Following the category number is a letter G for gas or D for dust. If dust-air hazards are present, the dust must be classified as electrically conductive or electrically non-conductive. NORD offers drives for categories 2G, 2D, 3G and 3D for both conductive and non-conductive dust areas.

Zones

ATEX guideline 1999/92/EC requires plant operators and approved authorities to classify places at the workplace where explosive atmospheres may occur into hazardous or non-hazardous areas. Hazardous areas are further divided into zones. Atmospheres with gas-air mixtures are divided into zones 0, 1, and 2 with zone 0 being the most hazardous. Atmospheres with dust-air mixtures are divided into zones 20, 21, and 22 with zone 20 being the most hazardous.

The relationship between workplace Zones and equipment Categories is defined in the table below.

Zone (workplace)	Category (equipment)	Atmospheric Hazard	Definition	Exposure (hours/year)	Does NORD offer drives?
0	1G	Gas	Explosive atmosphere is present continuously or frequently due to malfunctions.	> 1000	No
20	1D	Dust			
1	2G	Gas	Explosive atmosphere is present occasionally or due to anticipated malfunctions.	10 … 1000	Yes
21	2D	Dust			
2	3G	Gas	Explosive atmosphere is unlikely to occur in normal operation and if it does occur, it will be for a short period of time.	< 10	Yes
22	3D	Dust			

Send Quote Requests to info@automatedpt.com
Call +1(800)985-6929 To Order or Order Online At Nordgearmotors.com

Send Quote Requests to info@automatedpt.com Call +1(800)985-6929 To Order or Order Online At Nordgearmotors.com

ATEX Information



Production Type

Following the equipment category in the explosion protection declaration is the lower case letters that indicate the exact protection type of the equipment. Depending on the zone and equipment category different solutions are possible.

Motors:	
Flameproof enclosure	d
Increased safety	e
Non-sparking	n
Gear Units:	
Constructional safety	c
Liquid immersion	k

Flameproof Enclosure "EEx d"

Flameproof motors are designed with stronger walls and specific ignition gaps to prevent internal explosions from transmitting to the surrounding atmosphere. Flameproof motors are frequently used for inverter operations, brakes, encoders and when a very high degree of safety is required. Specifically flameproof motors:

- Have housings that can withstand internal explosion pressures
- Have ignition gaps designed to dissipate the pressure arising from an internal explosion
- Are designed so that generated hot gases are significantly cooled by the time they escape the motor body so they do not potentially ignite the potentially explosive environment

Increased Safety "EEx e"

Increased safety motors are designed with higher quality insulation and larger clearances between rotating parts. This prevents sparking as well as high surface and internal temperatures even during motor malfunction. Increased safety motors are less expensive than flameproof motors, but use special windings that generally result in lower performance than flameproof motors.

Non-Sparking "EEx n"

Non-sparking motors resemble increased safety "e" motors, but do not achieve the same protection level. They do however have the same power output of flameproof motors and can be used in conjunction with approved inverters.

Constructional Safety "EEx c"

Construction safety for gear units takes into account measures including ignition protection from hot surface temperatures, sparks, moving parts and adiabatic compression even under expected gear unit failures. NORD provides gear units with constructional safety protection.

Liquid Immersion "EEx k"

Liquid immersion protection type "k" ensures partial or complete submersion in a protective fluid or constant wetting of a potentially combustible surface.

ATEX Temperature Specification

In a dust-air mixture surface temperature is a critical thermal factor, therefore the maximum surface temperature is declared based upon the dust type that is present. The goal is to keep surface temperatures below the smoldering and ignition temperature of a dust-air mixture. NORD displays a maximum surface temperature on the reducer nameplate, typically 125°C.

Gas-air mixtures are grouped into temperature classes. The following table shows the maximum surface temperature and temperature ignition ranges and the for each temperature class.

Temperature Class	Maximum Surface Temperature °C	Ignition Temperature °C
T1	450	> 450
T2	300	300 … 450
T3	200	200 … 300
T4	135	135 … 200
T5*	100	100 … 135
T6*	85	85 … 100

* Not satisfied with AC gear drives

Send Quote Requests to info@automatedpt.com
Call +1(800)985-6929 To Order or Order Online At Nordgearmotors.com

Send Quote Requests to info@automatedpt.com Call +1(800)985-6929 To Order or Order Online At Nordgearmotors.com

ATEX unit Selection

Since the selection of gear units for hazardous locations requiring ATEX certification can be somewhat confusing, NORD has simplified the process.

1. Select a gear unit based upon power, speed and service factor
2. Contact NORD to request the ATEX inquiry form. The form is also available at www.nord.com.

3. Fill in the ATEX inquiry form
   - Select the hazard, Gas or Dust
   - Select the zone
   - Select the temperature class (for gas) or select electrically conductive or non-conductive for dust hazards

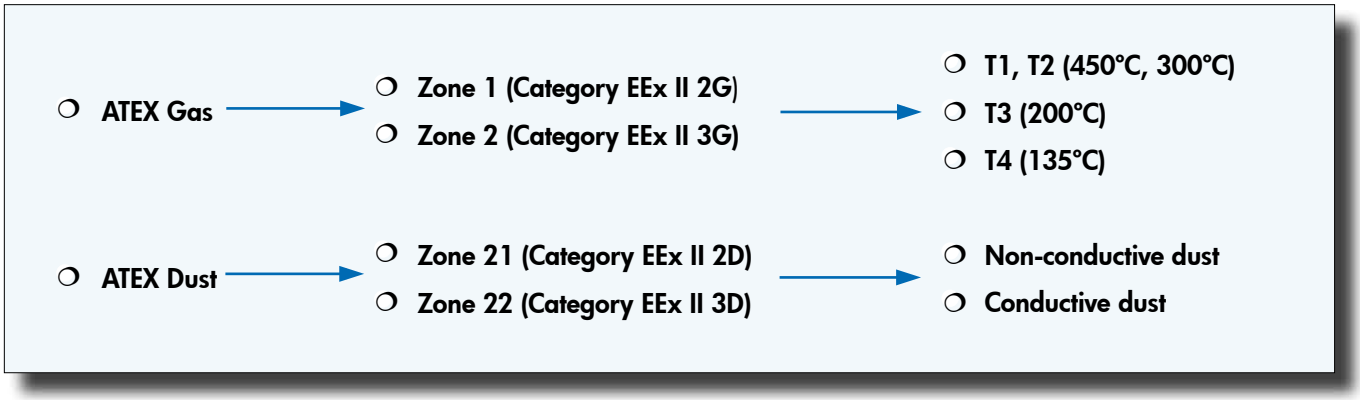

4. Return the completed ATEX inquiry form
5. NORD engineers will review your selection to ensure it conforms to ATEX guidelines
6. If you selection is approved, Customer Service will quote the unit. If not, NORD engineers will make a unit selection recommendation.

ATEX Documentation

ATEX applications require more documentation than gear drive equipment used in non-hazardous locations. Each ATEX certified NORD gear drive undergoes verification to ensure it will safely operate within the limits of the ATEX specification. NORD stores and supply this document to the customer upon request. In addition, ATEX specific operation & maintenance instructions are included with each equipment delivery in the language of the equipment builder and end user.

Send Quote Requests to info@automatedpt.com
Call +1(800)985-6929 To Order or Order Online At Nordgearmotors.com

Send Quote Requests to info@automatedpt.com Call +1(800)985-6929 To Order or Order Online At Nordgearmotors.com

Lubrication

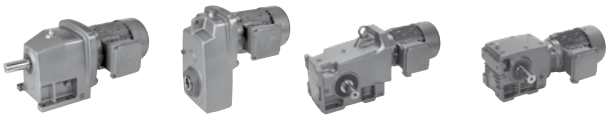

The Importance of Proper Lubrication

Proper gearbox lubrication is essential in order to reduce friction and component wear, and protect against corrosion and rust. Gear lubricants reduce heat and wear by inserting a load-sharing "protective fluid film" between mating parts and preventing direct metal to metal contact. Properly selected lubricants will operate under various film conditions, improve heat transfer, optimize reducer efficiency, absorb shock loads, reduce noise, inhibit foaming, and separate water readily.

Design Considerations

Along with many other factors, the gear designer must consider the type of gearing (helical, bevel, worm, etc.), the gear load and speed conditions, and the expected operating oil temperatures. These factors help determine a generally suitable oil category, a desired additive package, preferred base-oil type, and oil viscosity.

It is important that the consumer be aware of these many design factors before making any changes in the critical areas (oil category, base-oil type, viscosity, etc.) One should consult their preferred lubrication supplier or NORD Gear when questions arise.

Gear Oil Types, Categorized by Base Oil

Mineral Oil with an EP Additive (DIN 51517, Type CLP)

High performance mineral gear oils are carefully engineered and manufactured to improve aging characteristics, minimize friction, offer good wear protection, provide corrosion and oxidation resistance, minimize foam, and separate water. Mineral gear oils are classified as API Group I or II oils, depending upon viscosity.

The standard NORD mineral gear oil has an extreme pressure (EP) additive ISO Viscosity Grade EP220 (AGMA 5 EP) and is generally acceptable for helical and helical-bevel gear units. Good quality mineral oil should have the ability to operate at moderate sump temperatures (up to 80-85 °C) without losing viscosity or thickness. A minimum viscosity index (VI) of 93 or higher is suggested. The oil must also have good film strength to handle shock loads, high torque, and start-up conditions. A minimum FZG Scuffing Load Stage 12 is desirable.

Advantages:

- Most economical of all the gear oil types.
- Generally offers good compatibility with shaft seals, gaskets, paint finishes, etc.
- Offers good corrosion and oxidation protection.
- Effectively reduces internal friction and wear.

When Synthetic Oils Are Used

Synthetic gear oils are suggested when mineral gear oils have reached their performance limit or when they no longer meet certain application requirements. NORD may recommend synthetic oil for any one of the following conditions:

- Severe duty applications or when gears are exposed to frequent starts and stops, high-load or shock.
- For applications in low or high temperature service.
- To extend oil service interval requirements.
- To eliminate the necessity for seasonal oil changes.
- To extend service life of factory-sealed or maintenance-free gear units.
- To take advantage of performance benefits: shear resistance, low traction coefficient, reduced internal friction, improved lubricity, reduced operating temperatures, improved gear efficiency, etc.

Performance Advantages of Synthetic Oil

Compared to mineral oils, synthetic oils provide a number of performance advantages including:

- Ability to operate at higher temperatures without losing viscosity or thickness, due to a much improved viscosity index.
- Improved low-temperature stability due to a lower pour point
- Increased oil change intervals due to superior oxidative and wear resistance
- Lower tendency to form residues and increased resistance to foaming.
- Other benefits may include: very good shear resistance, low traction coefficient, reduced internal friction, improved lubricity, reduced operating temperatures, improved gear efficiency, and extended component life and wear protection.

When application conditions warrant the use of synthetic oil, NORD may suggest a particular type of synthetic oil, depending upon the gear unit type and the application.

Send Quote Requests to info@automatedpt.com
Call +1(800)985-6929 To Order or Order Online At Nordgearmotors.com

Send Quote Requests to info@automatedpt.com Call +1(800)985-6929 To Order or Order Online At Nordgearmotors.com

Synthetic Hydrocarbon/Polyalphaolefin (SHC/PAO) Oil (DIN 51517, Type CLP-HC)

Synthetic Hydrocarbons (SHC) or Polyalphaolefin (PAO) synthetic base oils offer good miscibility with mineral base oils and are very readily available. SHC/PAO oils are classified as API Group IV oils. The can be formulated with or without anti-wear (AW) or extreme pressure (EP) additives. They can also be formulated for acceptance in food-grade applications.

Advantages:

- Higher viscosity index and therefore greater high-temperature stability than mineral oil.
- Better low-temperature stability and lower pour point than mineral type gear oils
- High surface tension and lower tendency to foam compared to mineral oil, and water-soluble polyglycol gear oils.
- Compatible (miscible) with mineral oil.
- Better water seperability demulsibility than PG oils.

Polyalkylene Glycol or Polyglycol Synthetic Oil (DIN 51517, Type CLP-PG)

Polyalkylene glycol or polyglycol (PAG or PG) synthetic gear oils are made readily available through many lubrication suppliers. PG oils are classified as API Group V gear oils. They can also be formulated for acceptance in food-grade applications.

PG gear oils possess extremely low traction coefficients and a viscosity index higher than any of the other synthetics (often greater than 220 VI), resulting in excellent heat resistant, shear stability, and natural anti-wear properties.

Typical PG gear oils are formulated with a 1:1 or higher ratio of ethylene oxide to propylene oxide (50:50 or 60:40 is common); this makes PG gear oils water soluble, providing them with very good corrosion resistance even when water is present in concentrations that are higher then what is normally allowed.

Advantages:

- PG oils offer the highest viscosity index of any other synthetic resulting in excellent heat resistant, shear stability, and superior natural anti-wear properties without requiring EP-additives.
- PG gears oils minimize internal friction and often result in improved gear efficiency.
- PG oils have significantly higher film strength than mineral and SHC/PAO oils and out perform these oils at higher operating oil temperatures (approaching 80°C or higher).

CAUTIONS

Polyglycol (PG) oils are not miscible with other oil types and should never be mixed with mineral oil, hydrosynthesized synthetic or PAO synthetic oils.

Food-Grade Lubricants

Food-grade lubricants should be manufactured in compliance with FDA 212 CFR 178.3570 and should either satisfy the former 1998 USDA Guidelines as an H1 lubricant or currently qualify as a NSF-H1 lubricant. Please consult with lubrication manufacture for more information or visit www.nsf.org

H1 food grade oil can only contain additives which appear on the FDA "approved list" for food safe compounds. H1 oils are generally absent of common zinc-based AW additives, and sulfur-phosphorus based, EP chemistries, commonly found in many industrial gear oils.

Food manufactures control risk and liability by following detailed guidelines outlined by the HACCP (Hazard Analysis and Critical Control Point) program, which includes food-grade H1 lubricants.

Food grade H1 lubricants may be formulated as highly refined mineral oils (white oils), SHC/PAO synthetic oils or PG synthetic oils.

The highly refined nature of good-quality food-grade white-oils provides good long-term oxidative stability and in most cases adequate lubrication under high-load (boundary) conditions. So long as food-grade white oils meet the minimum anti-wear requirements of the normally specified non-food grade oil, they are often acceptable.

Both food-grade white oils and PAO's have an inherent "purity" and absence of polar compounds, making them better than the average mineral oil or even PG oil in terms of demulsibility (water seperability).

Compared to food-grade white-oils, food-grade synthetic PAO or PG oils typically provide:

- Better wear and oxidation resistance.
- Improved high-temperature characteristics.
- Better cold-temperature behavior.

Send Quote Requests to info@automatedpt.com
Call +1(800)985-6929 To Order or Order Online At Nordgearmotors.com

Send Quote Requests to info@automatedpt.com Call +1(800)985-6929 To Order or Order Online At Nordgearmotors.com

Lubrication



The Importance of Oil Viscosity

Viscosity or the oil's resistance to shear under load, is often considered the single most important property of any gear oil.

NORD Gear Designers have selected the most appropriate ISO viscosity grade of oil, for each type or class of gear reducer. Gear oil viscosity is selected by assuming typical ambient conditions, at rated speed and load conditions.

Important Considerations:

- The correct viscosity selection helps provide proper lubrication and assures that a minimum film thickness is maintained between interacting surfaces.
- The degree to which viscosity changes with temperature or the viscosity index, varies from oil to oil, and depends upon the type of lubricant and additive agents used.
- Selecting too low of a viscosity can result in mixed-boundary (partial metal-tometal contact) or boundary lubrication (full metal-to-metal contact) conditions, increasing internal friction heat build-up and wear.
- Selecting too high of a viscosity results in increased churning and squeezing losses in the load zone and excessive heat (especially when peripheral gear speeds are high); Ultimately, this causes the oil temperature to rise and the viscosity to go down, decreasing the effectiveness of the lubricant.

Considering an Oil Viscosity Change

There are three primary reasons to consider a lubrication viscosity change as follows:

1. Low temperature gear oils should be selected so that the pour point is at least 9°F (5°C) lower than the expected minimum ambient temperature. In extreme cases, consider a lower ISO Viscosity rating and test the critical performance of the gear box under cold start-up.

2. High temperature applications may require an increase in the lubricants viscosity to assure proper lubrication conditions in the critical load zones of the gear unit. NORD also recommends switching to synthetic oil if oil sump temperatures exceed 176-185 °F (80-85 °C).

3. In cases of extreme load conditions, gear pairs and antifriction bearings may be more susceptible to scuffing wear. In these operating conditions, it may be beneficial to consider an increased lubrication viscosity and/or lubrication with improved antiwear additive packages.

NORD recommends that the user consult with their primary lubrication supplier when considering changes in oil viscosity.

Maximum Oil Sump Temperature Limit

To prevent reducer overheating, the reducer's maximum oil sump temperature limit must not be exceeded for prolonged periods of operation (up to 3 hours continuous operation, depending upon reducer size).

Oil Type	Maximum Oil Temperature Limit	
	NORD	AGMA 9005-D94
Mineral	80-85 °C (176-185 °F)	95 °C (203 °F)
Synthetic	105 °C (220 ° F)	107 ° C (225 ° F)

Send Quote Requests to info@automatedpt.com
Call +1(800)985-6929 To Order or Order Online At Nordgearmotors.com

Send Quote Requests to info@automatedpt.com
Call +1(800)985-6929 To Order or Order Online At Nordgearmotors.com

Oil Expansion Chamber (OA)

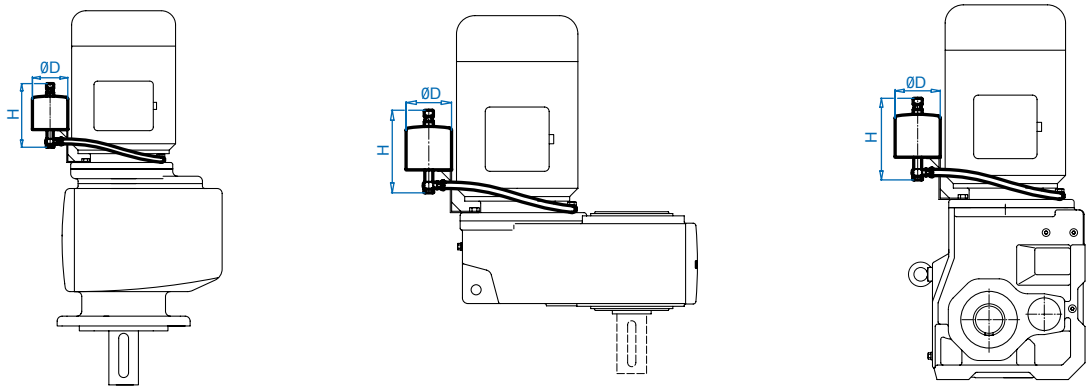

Helical In-line Gear Unit	Clincher™ Gear Unit	Helical-Bevel Gear Unit	Size	Part Number	D	H	[lb]
SK 42/SK 43 SK 52/SK 53 SK 63	SK 4282/SK 4382 SK 5282/SK 5382 SK 6382	SK 9042.1/SK 9043.1 SK 9052.1/SK 9053.1	I	28390390	3.94	7.09	11.0
SK 62 SK 72/SK 73	SK 6282 SK 7282/SK 7382	SK 9072.1 SK 9082.1	II	28390400	5.91	11.81	13.2
SK 82/SK 83 SK 92/SK 93 SK 102/SK 103	SK 8282/SK8382	SK 9086.1 SK 9092.1 SK 9096.1	III	28390410	7.09	11.81	15.4

Oil Expansion Chamber (OA)

Gear units with the motor or input shaft mounted vertically upright must be filled almost completely with oil in order to properly supply the 1st stage gearing with oil. Certain operating conditions and higher gear peripheral speeds can result in increased oil churning or splashing losses and heating of the air space located above the oil.

For these conditions an oil expansion chamber or oil overflow chamber is often recommended. At rest, the gear unit is filled to its normal fill-level position and there should be no oil in the expansion chamber.

During operation, the oil expansion chamber provides a safe overflow area for the expanded oil-air mixture, thus eliminating excessive pressure build-up, minimizing the formation of foam, and preventing oil-loss through the breather, oil seals, gaskets, etc. As heat is released from the expanded air-oil mixture contained within the overflow chamber, gravity allows the oil to be returned to the primary gear sump supply, eliminating a critical loss in oil level.

Application Considerations

Nord strongly recommends the use of an oil expansion chamber when the motor is mounted vertical-up, when the reducer mounting position is M4 or when it meets any of the criteria listed below. Any application required to operate above 1800 rpm synchronous motor speeds should also be reviewed to be certain that the reducer thermal limits are observed.

- Helical In-line gear unit sizes SK42 and larger, with ratios $i_{total} \leq 24:1$ or output speeds $n_2 \geq 75$ rpm.
- Parallel shaft gear unit sizes between SK4282 - SK8282 ♦, with ratios $i_{total} \leq 24:1$ or output speeds $n_2 \geq 75$ rpm.
- Helical-bevel gear unit sizes SK9042.1 and larger with ratios $i_{total} \leq 24:1$ or output speeds $n_2 \geq 75$ rpm.
- Any helical-worm gear unit with ratio $i_{total} \leq 20:1$ or output speeds $n_2 \geq 90$ rpm (please consult NORD for application review).
- ♦ Clincher gear unit sizes SK9282/SK9382 and larger require an oil reservoir (option OT) instead of an oil expansion chamber (Option OA).

Send Quote Requests to info@automatedpt.com
Call +1(800)985-6929 To Order or Order Online At Nordgearmotors.com

Lubrication



Oil Reservoir Tank (OT)

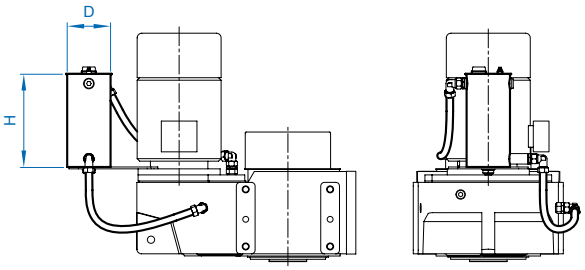

Parallel Shaft Gear Unit	Size	D	H	Additional Oil Fill (L)	Container Volume (L)
SK 9282/SK9382 SK10382.1	I	7.87	15.75	approx. 30	10
SK11382.1	II	12.99	15.75	approx. 40	30

Oil Reservoir Tank

Clincher™ shaft mount units SK9282 and larger, with the motor or input shaft mounted vertically upright, should be filled with oil in order to prevent excessive foaming and heat build-up.

The oil reservoir must be located above the gear unit. Even at non-operating ambient conditions, a small amount of oil should be visible in the bottom of the oil reservoir. During operation, all parts are submersed in oil, especially the high-speed gear set, thus preventing, the formation of oil foam. In addition, this type of installation assures that all bearings are properly lubricated with oil.

The oil reservoir is larger than the oil expansion chamber and is vented. The oil reservoir has two flexible oil hoses connected to the gear unit to help assure proper ventilation and passive oil circulation.

As a standard, the gear unit is supplied with the oil fill stated on pages A46/A47. Upon commissioning, the oil tank must be filled to the level shown on the dip-stick located inside the tank (approximations shown in above table). The user is responsible to add this additional oil, however, the oil can be supplied by NORD for an additional charge.

Application Considerations

NORD strongly recommends the use of an oil reservoir tank when the following conditions apply:

- Gear ratios $i_{total} \leq 24{:}1$or output speed $n_2 \geq 75$ rpm.
- Installations with motor mounted vertical-up or when the reducer mounting position is M4.
- Parallel shaft gear unit sizes SK9282/SK9382 and larger.

Water Cooling Cover (WC)

Clincher™ shaft mount units and Helical-bevel units are available with a water cooling system integrated into the assembly cover on the unit. The cover is made of aluminum and cooling coils in the cover prevent direct contact with the oil sump, therefore eliminating the possibility of oil contamination. Simple threaded fittings are used to connect the coils to the customer supplied heat exchanger. NORD recommends monitoring the temperature or flow rate of water since the cooling coil does not lie in the oil reservoir.

If low ambient temperatures exist, the heat exchanger may be used to provide heat to the gear unit.

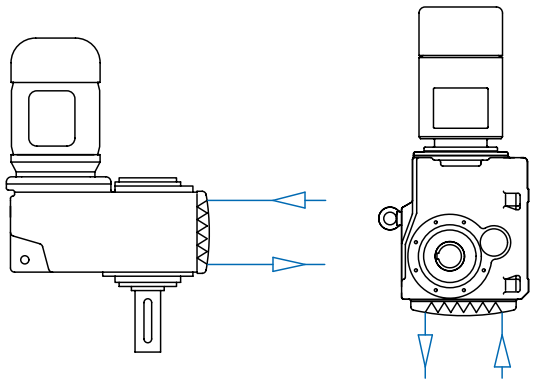

Send Quote Requests to info@automatedpt.com
Call +1(800)985-6929 To Order or Order Online At Nordgearmotors.com

Send Quote Requests to info@automatedpt.com Call +1(800)985-6929 To Order or Order Online At Nordgearmotors.com

Oil Cooler (OC)

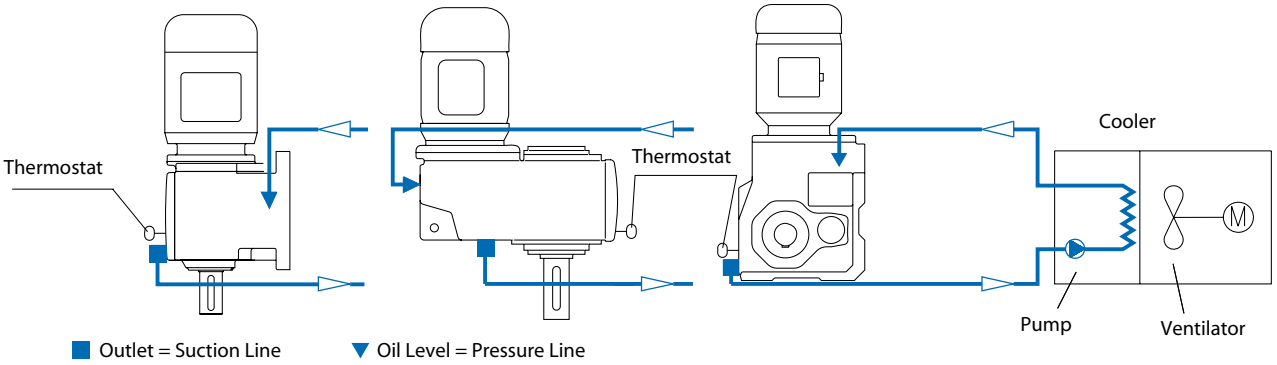

Oil Cooler

In certain applications, in order to prevent reducer overheating, NORD may recommend an oil cooler. In the event the customer wishes to supply their own device, NORD can estimate the amount of heat dissipation required, for a given set of application parameters.

NORD can also provide a compact air-over-oil cooling unit. The oil cooler (Option OC) comes complete with heat exchanger, motor, pump, circulating fan, and connection hoses. Oil is pumped from the reducer and cooled by the air stream created by the large fan. The temperature is controlled by a thermostat. Please consult NORD for additional details about the oil cooler.

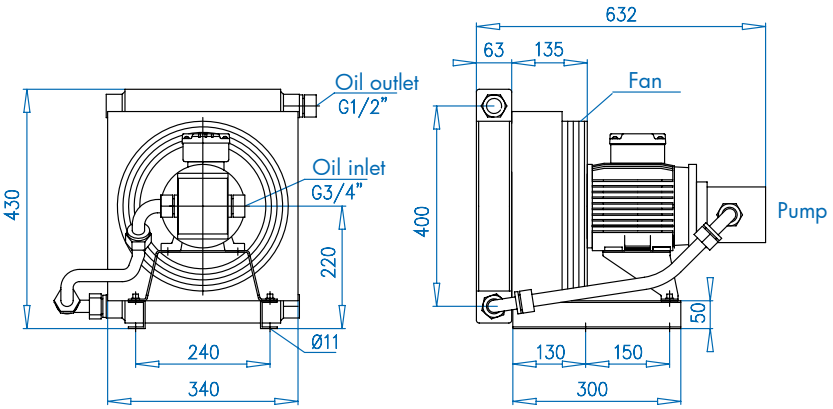

Not suited for hazardous areas or potentially explosive atmospheres.

Oil Cooler Type	TFS/A 8,5-400-F-03-11	**Motor Power**	0.55 kW
Supplier	UNIVERSAL HYDRAULIK®	**Frequency**	50 Hz / 60Hz
Input / Output Connection	G3/4" / G1/2"	**Supply Voltage**	230-400 V/50 HZ – 460 V/60 Hz
Cooling Capacity	8.5 kW	**Rated Current**	1.7 A
Pump Capacity	30 l/min	**Phase**	3 ~
Rate of Air Flow	1131 m³/h	**RPM**	1350 / 1650
Viscosity Range	10-300 mm³ /s	**Construction Class**	IP55
Permissible Pressure	10 bar	**Insulation Class**	F
		Temperature Class	B

Send Quote Requests to info@automatedpt.com
Call +1(800)985-6929 To Order or Order Online At Nordgearmotors.com

Lubrication



Lubrication Types

Proper gearbox lubrication is essential in order to reduce friction, heat, and component wear. Lubricants reduce heat and wear by inserting a protective "fluid boundary" between mating parts and preventing direct metal to metal contact. Lubricants also help prevent corrosion and oxidation, minimize foam, improve heat transfer, optimize reducer efficiency, absorb shock loads and reduce noise.

Mounting position not only determines the proper fill-level but may also have some effect on final reducer assembly. If considering any mounting positions that are not shown as catalog-standard options, it is critical that the customer consult with NORD prior to ordering. Unless otherwise specified, NORD supplies most all gear units (*) factory-filled with the standard lubrication type and the appropriate amount of lubricating oil.

* Gear units SK10282, SK10382, SK11282, SK11382, SK12382, and SK9096.1 are supplied without oil.

Standard Oil Lubricants

Gear Unit Type	ISO Viscosity	Oil Type	Ambient Temperature Range	Manufacturer Brand/Type	Notes
Helical In Line, Parallel-Shaft & Bevel	VG220	MIN-EP	0 to 40°C (32 to 104°)	Mobilgear 600XP220	♦❶
	VG220	PAO-EP	-35 to 60°C (-31 to 140°F)	Mobil SHC Gear 220	♦❷
	VG220	FG	-5 to 40°C (23 to 104°F)	Fuchs FM220	♦
Helical Worm	VG680	PAO	0 to 60°C (32 to 140°F)	Mobil SHC636	♦

Optional Oil Lubricants

Gear Unit Type	ISO Viscosity	Oil Type	Ambient Temperature Range	Manufacturer Brand/Type	Notes
Helical In Line, Parallel-Shaft & Bevel	VG460	PAO-EP	-35 to 80°C (-31 to 176°F)	Mobil SHC Gear 460	-
	VG150	PAO-EP	-35 to 25°C (-31 to 77°F)	Mobil SHC Gear 150	-
	VG220	FG-PAO	-35 to 60°C (-31 to 140°F)	Mobil SHC Cibus 220	-
Helical Worm	VG460	PAO	0 to50°C (32 to 122°F)	Mobil SHC 634	-
	VG460	FG-PAO	0 to50°C (32 to 122°F)	Mobil SHC Cibus 460	-

Standard Bearing Grease Lubricants

Grease Thickener	NLGI Grade	Grease Type	Ambient Temperature Range	Manufacturer Brand/Type	Notes
Li-Complex	NLGI 2	MIN	-30 to 60°C (-22 to 140°F)	Mobil Grease XHP222	♦❶
Li-Complex	NLGI 2	PAO	-40 to 80°C (-40 to 176°F)	Mobil / Mobilith SHC 220	♦❷
Polyurea	NLGI 2	FG-PAO	-30 to 80°C (-22 to 176°F)	Mobil SHC Polyrex 222	♦

♦ Stocked Lubricants

❶ Standard product on serviceable gear units

❷ Standard product on maintenance free gear units

Oil Formulation Codes

MIN-EP	Mineral Oil with EP Additive
PAO	Synthetic Polyalphaolefin Oil
PAO-EP	Synthetic Polyglycol Oil with Additive
PG	Synthetic Polyglycol Oil
FG	Food-Grade Oil
FG-PAO	Food-Grade, Synthetic Polyalphaolefin Oil

Important Notes

- In worm gears avoid using (EP) gear oils that contain sulfur-phosphorous chemistries, as these additives can react adversely with bronze worm gears and accelerate wear.
- Food grade lubricants must be in compliance with FDA 212 CFR 178.3570 and qualify as a NSF-H1 lubricant. Please consult with lubrication manufacture for more information.
- When making a lubrication change, check with the lubrication supplier to assure compatibility & to obtain recommended cleaning or flushing procedures.
- Do not mix different oils with different additive packages or different base oil formulation types. Polyglycol (PG) oils are not miscible with other oil types and should never be mixed with mineral oil, or Polyalphaolefin (PAO) oil.
- Please Consult NORD if considering cold-temperature oils below an ISO Viscosity VG100 or lower.

Send Quote Requests to info@automatedpt.com
Call +1(800)985-6929 To Order or Order Online At Nordgearmotors.com

Send Quote Requests to info@automatedpt.com Call +1(800)985-6929 To Order or Order Online At Nordgearmotors.com

Ventilation

Most gear reducers (except for SK0182NB, SK0282NB and SK1382NB) are equipped with a vent which helps compensate for air pressure differences between the inner space of the gear unit and the atmosphere.

The spring-pressure vent (Autovent™) is commonly supplied and factory-installed. Normally open vents may also be supplied as an option; normally-open vents are closed upon delivery in order to prevent oil leakage during transport. When normally open vents are supplied, the sealing plugs must be removed prior to commissioning the reducer.

Prior to reducer start-up, it is important to check the maintenance manual to verify that the vent is properly located with respect to mounting position.

Mounting Position

The reducer mounting position determines the approximate oil fill-level and the appropriate vent location. In some cases mounting position may dictate possible variation in final reducer assembly.

If considering any mounting positions that are not shown as catalog-standard options, it is critical that the customer consult with NORD prior to ordering.

Oil Fill Quantities

Oil fill quantities shown in the catalog or maintenance instructions are approximate amounts. The actual oil volume varies depending upon the gear ratio. Prior to commissioning the reducer, the oil-fill level should be checked using the reducer's oil-level plug. It may be necessary to drain excess oil or add additional oil.

Unless otherwise specified, NORD supplies most all gear units factory-filled with the standard lubrication type per the specified mounting position. Gear units SK10282, SK10382, SK11282, SK11382, SK12382, and SK9096.1 are supplied without oil.

Lubrication Replacement

If the gear unit is filled with mineral oil, the lubricant should be replaced at least after every 10,000 operating hours or after every two years. If the gear unit is filled with synthetic oil, the lubricant should be replaced at least after every 20,000 operating hours or after every four years.

Often gear reducers are exposed to extreme ambient conditions, hostile environments, wet conditions, or dirty and dusty operating areas. Especially in these situations, it is important to change the reducer lubricant more often that what is suggested as a typical guideline.

The Importance of Routine Oil Analysis

Routine oil analysis, sound lubrication practices, and good tracking of oil performance trends as related to specific equipment, will help establish proper lubrication maintenance and change-out intervals.

To maximize equipment reliability, NORD Gear generally recommends a condition-based lubrication maintenance program. One may take exceptions to this general recommendation on sealed-for-life or maintenance-free gear units or smaller and less costly gear units. In these instances, the replacement cost of the gear unit is often small compared to the costs associated with this type of oil analysis program.

NORD suggests replacing the gear oil if oil analysis indicates any of the following:

- Viscosity has changed by approximately 10% or more.
- Debris particles (silicon, dust, dirt or sand) exceed 25 ppm.
- Iron content exceeds 150-200 ppm.
- Water content is greater than 0.05% (500 ppm).
- Acid number tests indicate a significant level of oxidative break-down of the oil and a critical reduction in performance.

Send Quote Requests to info@automatedpt.com
Call +1(800)985-6929 To Order or Order Online At Nordgearmotors.com

In-line Foot Mount Positions & Oil Fill Quantities



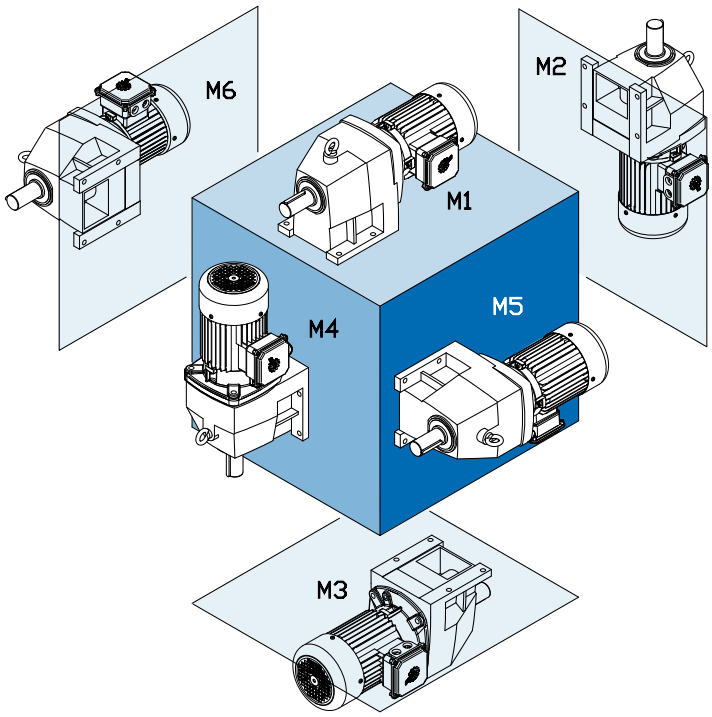

Mounting Position	M1		M2		M3		M4		M5		M6	
	Quarts	Liters	Quarts	Liters	Quarts	Liters	Quarts	Liters	Quarts	Liters	Quarts	Liters
SK02	0.16	0.15	0.63	0.60	0.74	0.70	0.63	0.60	0.42	0.40	0.42	0.40
SK03	0.32	0.30	1.06	1.00	0.85	0.80	0.95	0.90	0.63	0.60	0.63	0.60
SK11E	0.26	0.25	0.53	0.50	0.58	0.55	0.42	0.40	0.37	0.35	0.37	0.35
SK12	0.26	0.25	0.79	0.75	0.90	0.85	0.79	0.75	0.53	0.50	0.53	0.50
SK13	0.63	0.60	1.32	1.25	1.16	1.10	1.27	1.20	0.74	0.70	0.74	0.70
SK21E	0.63	0.60	1.27	1.20	1.27	1.20	1.06	1.00	1.06	1.00	1.06	1.00
SK22	0.53	0.50	1.90	1.80	2.11	2.00	1.90	1.80	1.43	1.35	1.43	1.35
SK23	1.37	1.30	2.54	2.40	2.43	2.30	2.48	2.35	1.69	1.60	1.69	1.60
SK31E	1.16	1.10	2.85	2.70	2.33	2.20	2.43	2.30	1.80	1.70	1.80	1.70
SK32	0.95	0.90	2.64	2.50	3.17	3.00	3.07	2.90	2.11	2.00	2.11	2.00
SK33N	1.69	1.60	3.07	2.90	3.38	3.20	3.91	3.70	2.43	2.30	2.43	2.30
SK41E	1.80	1.70	2.75	2.60	3.49	3.30	2.64	2.50	2.75	2.60	2.75	2.60
SK42	1.37	1.30	4.76	4.50	4.76	4.50	4.55	4.30	3.38	3.20	3.38	3.20
SK43	3.17	3.00	5.92	5.60	5.50	5.20	6.98	6.60	3.81	3.60	3.81	3.60
SK51E	2.33	2.20	4.65	4.40	4.97	4.70	4.23	4.00	3.59	3.40	3.59	3.40
SK52	2.64	2.50	7.40	7.00	7.19	6.80	7.19	6.80	5.39	5.10	5.39	5.10
SK53	4.76	4.50	9.20	8.70	8.14	7.70	9.20	8.70	6.34	6.00	6.34	6.00
SK62	6.87	6.50	15.9	15.0	13.7	13.0	16.9	16.0	15.9	15.0	15.9	15.0
SK63	13.7	13.0	15.3	14.5	15.3	14.5	16.9	16.0	13.7	13.0	13.7	13.0
SK72	10.6	10.0	24.3	23.0	19.0	18.0	27.5	26.0	24.3	23.0	24.3	23.0
SK73	21.7	20.5	21.1	20.0	23.8	22.5	28.5	27.0	21.1	20.0	21.1	20.0
SK82	14.8	14.0	37.0	35.0	28.5	27.0	46.5	44.0	33.8	32.0	33.8	32.0
SK83	31.7	30.0	32.8	31.0	35.9	34.0	39.1	37.0	34.9	33.0	34.9	33.0
SK92	26.4	25.0	77.1	73.0	49.7	47.0	80.3	76.0	55.0	52.0	55.0	52.0
SK93	56.0	53.0	74.0	70.0	62.4	59.0	76.1	72.0	51.8	49.0	51.8	49.0
SK102	38.1	36.0	83.5	79.0	69.8	66.0	107.8	102	75.1	71.0	75.1	71.0
SK103	78.2	74.0	75.1	71.0	78.2	74.0	102.5	97.0	70.8	67.0	70.8	67.0

Send Quote Requests to info@automatedpt.com
Call +1(800)985-6929 To Order or Order Online At Nordgearmotors.com

Send Quote Requests to info@automatedpt.com
Call +1(800)985-6929 To Order or Order Online At Nordgearmotors.com

In-line Flange Mount Positions & Oil Fill Quantities

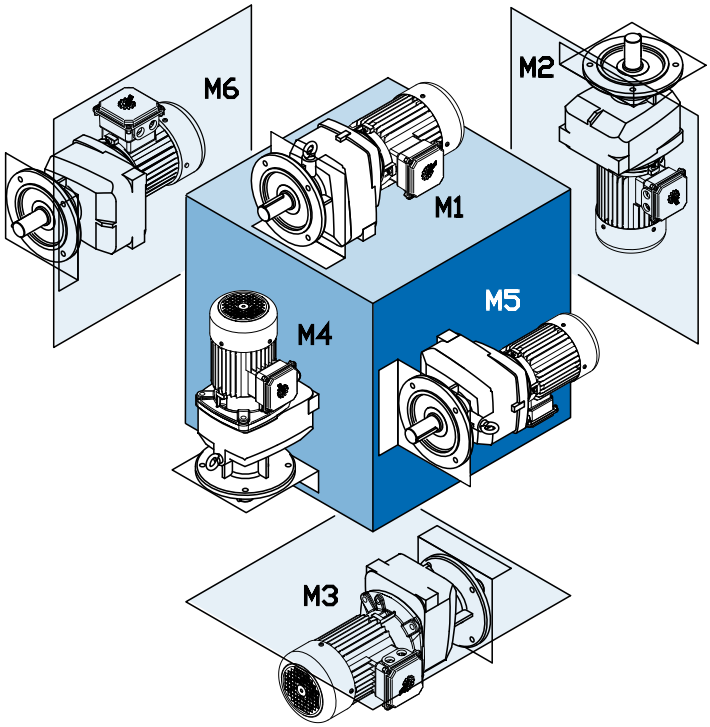

Mounting Position	M1		M2		M3		M4		M5		M6	
	Quarts	Liters	Quarts	Liters	Quarts	Liters	Quarts	Liters	Quarts	Liters	Quarts	Liters
SK02	0.26	0.25	0.63	0.60	0.63	0.60	0.63	0.60	0.53	0.50	0.53	0.50
SK03	0.53	0.50	0.85	0.80	0.95	0.90	1.16	1.10	0.85	0.80	0.85	0.80
SK11E	0.32	0.30	0.37	0.35	0.53	0.50	0.32	0.30	0.42	0.40	0.42	0.40
SK12	0.37	0.35	0.90	0.85	0.95	0.90	0.95	0.90	0.63	0.60	0.63	0.60
SK13	0.90	0.85	1.27	1.20	1.27	1.20	1.27	1.20	1.00	0.95	1.00	0.95
SK21E	0.53	0.50	1.48	1.40	1.16	1.10	0.74	0.70	0.95	0.90	0.95	0.90
SK22	0.74	0.70	2.11	2.00	2.11	2.00	1.90	1.80	1.64	1.55	1.64	1.55
SK23	1.59	1.50	2.75	2.60	2.64	2.50	2.96	2.80	2.96	2.80	2.96	2.80
SK31E	0.85	0.80	1.37	1.30	1.74	1.65	1.16	1.10	2.11	2.00	2.11	2.00
SK32	1.37	1.30	3.07	2.90	3.49	3.30	3.28	3.10	2.54	2.40	2.54	2.40
SK33	2.01	1.90	3.59	3.40	3.70	3.50	4.65	4.40	2.75	2.60	2.75	2.60
SK41E	1.06	1.00	2.75	2.60	2.96	2.80	1.69	1.60	3.49	3.30	3.49	3.30
SK42	1.90	1.80	4.65	4.40	4.76	4.50	4.23	4.00	3.91	3.70	3.91	3.70
SK43	3.70	3.50	6.02	5.70	5.29	5.00	6.45	6.10	4.33	4.10	4.33	4.10
SK51E	1.90	1.80	3.70	3.50	4.33	4.10	3.17	3.00	4.02	3.80	4.02	3.80
SK52	3.17	3.00	7.19	6.80	6.55	6.20	7.82	7.40	5.92	5.60	5.92	5.60
SK53	5.50	5.20	8.88	8.40	7.40	7.00	9.41	8.90	7.08	6.70	7.08	6.70
SK62	7.40	7.00	15.9	15.0	14.8	14.0	19.6	18.5	16.9	16.0	16.9	16.0
SK63	14.3	13.5	14.8	14.0	16.4	15.5	19.0	18.0	14.8	14.0	14.8	14.0
SK72	10.6	10.0	24.3	23.0	19.6	18.5	29.6	28.0	24.3	23.0	24.3	23.0
SK73	23.3	22.0	23.8	22.5	24.3	23.0	29.1	27.5	21.1	20.0	21.1	20.0
SK82	15.9	15.0	39.1	37.0	30.7	29.0	47.6	45.0	36.5	34.5	36.5	34.5
SK83	32.8	31.0	35.9	34.0	37.0	35.0	42.3	40.0	35.9	34.0	35.9	34.0
SK92	27.5	26.0	77.2	73.0	49.7	47.0	82.5	78.0	55.0	52.0	55.0	52.0
SK93	56.0	53.0	74.0	70.0	62.4	59.0	78.2	74.0	51.8	49.0	51.8	49.0
SK102	42.3	40.0	85.6	81.0	69.8	66.0	109.9	104.0	76.1	72.0	76.1	72.0
SK103	72.9	69.0	82.5	78.0	82.5	78.0	104.6	99.0	70.8	67.0	70.8	67.0

Send Quote Requests to info@automatedpt.com
Call +1(800)985-6929 To Order or Order Online At Nordgearmotors.com

Clincher™ Shaft Mount Positions & Oil Fill Quantities



DRIVESYSTEMS

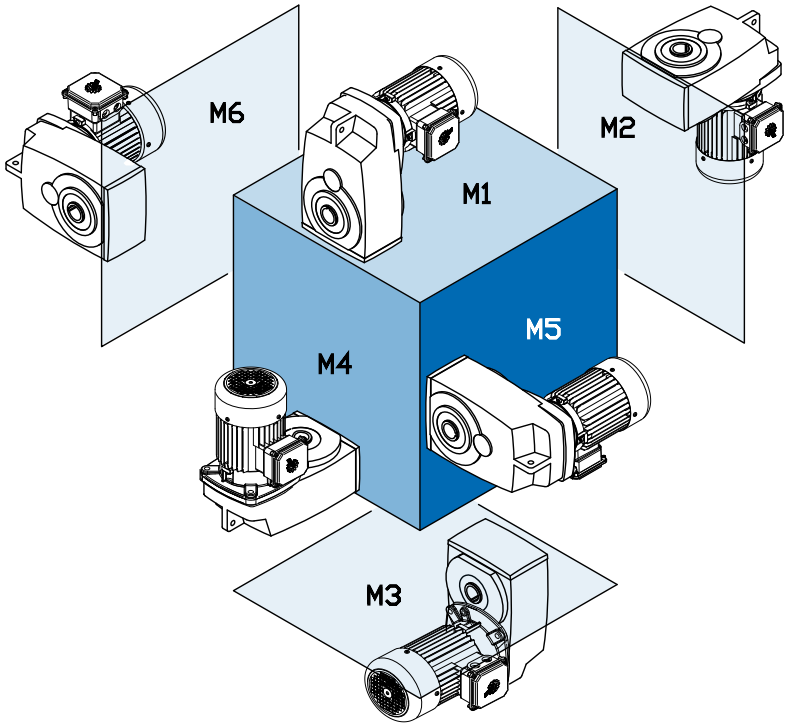

Mounting Position	M1		M2		M3		M4		M5		M6	
	Quarts	Liters	Quarts	Liters	Quarts	Liters	Quarts	Liters	Quarts	Liters	Quarts	Liters
SK0182NB	0.42	0.40	0.58	0.55	0.63	0.60	0.58	0.55	0.37	0.35	0.37	0.35
SK0282NB	0.74	0.70	1.06	1.00	0.85	0.80	1.16	1.10	0.95	0.90	0.95	0.90
SK1382NB	1.37	1.30	2.43	2.30	1.48	1.40	2.22	2.10	2.11	2.00	2.01	1.90
SK1282	0.95	0.90	1.37	1.30	0.95	0.90	1.27	1.20	1.00	0.95	1.00	0.95
SK2282	1.74	1.65	2.54	2.40	2.01	1.90	2.11	2.00	1.90	1.80	1.90	1.80
SK2382	1.80	1.70	2.75	2.60	2.01	1.90	3.28	3.10	1.59	1.50	1.59	1.50
SK3282	3.33	3.15	4.33	4.10	3.44	3.25	4.33	4.10	3.33	3.15	3.33	3.15
SK3382	4.33	4.10	5.18	4.90	3.49	3.30	5.92	5.60	3.49	3.30	3.49	3.30
SK4282	4.97	4.70	6.45	6.10	5.02	4.75	5.71	5.40	4.97	4.70	4.97	4.70
SK4382	6.24	5.90	7.19	6.80	5.18	4.90	8.77	8.30	5.18	4.90	5.18	4.90
SK5282	7.93	7.50	9.30	8.80	7.93	7.50	9.30	8.80	7.61	7.20	7.61	7.20
SK5382	13.2	12.5	12.7	12.0	7.08	6.70	14.8	14.0	8.77	8.30	8.77	8.30
SK6282	18.0	17.0	14.8	14.0	12.7	12.0	18.5	17.5	10.6	10.0	14.8	14.0
SK6382	17.4	16.5	13.7	13.0	10.1	9.60	19.0	18.0	14.8	14.0	13.2	12.5
SK7282	26.4	25.0	22.2	21.0	21.1	20.0	28.5	27.0	16.9	16.0	22.2	21.0
SK7382	23.3	22.0	21.1	20.0	16.9	16.0	26.4	25.0	24.3	23.0	20.1	19.0
SK8282	39.1	37.0	34.9	33.0	31.7	30.0	43.3	41.0	32.8	31.0	32.8	31.0
SK8382	35.9	34.0	33.8	32.0	26.4	25.0	40.2	38.0	37.0	35.0	31.7	30.0
SK9282	78.2	74.0	74.0	70.0	58.1	55.0	76.1	72.0	63.4	60.0	62.4	59.0
SK9382	77.2	73.0	74.0	70.0	47.6	45.0	78.2	74.0	68.7	65.0	63.4	60.0
SK10282*	95.1	90.0	95.1	90.0	42.3	40.0	95.1	90.0	63.4	60.0	86.7	82.0
SK10382*	89.8	85.0	106	100	77.2	73.0	106	100	84.6	80.0	84.6	80.0
SK11282*	174	165	169	160	153	145	206	195	106	100	148	140
SK11382*	169	160	164	155	148	140	222	210	164	155	143	135
SK12382*	169	160	164	155	148	140	222	210	164	155	143	135

* These units shipped without oil

Send Quote Requests to info@automatedpt.com
Call +1(800)985-6929 To Order or Order Online At Nordgearmotors.com

Send Quote Requests to info@automatedpt.com
Call +1(800)985-6929 To Order or Order Online At Nordgearmotors.com

Clincher™ Flange Mount Positions & Oil Fill Quantities

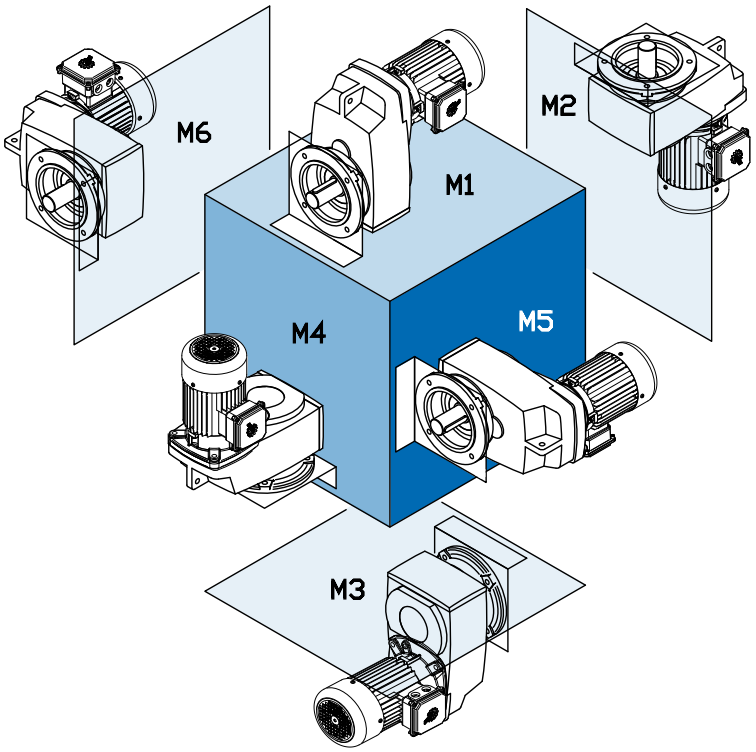

Mounting Position	M1		M2		M3		M4		M5		M6	
	Quarts	Liters	Quarts	Liters	Quarts	Liters	Quarts	Liters	Quarts	Liters	Quarts	Liters
SK0182NB	0.42	0.40	0.58	0.55	0.63	0.60	0.58	0.55	0.37	0.35	0.37	0.35
SK0282NB	0.74	0.70	1.06	1.00	0.85	0.80	1.16	1.10	0.95	0.90	0.95	0.90
SK1382NB	1.37	1.30	2.43	2.30	1.48	1.40	2.22	2.10	2.11	2.00	2.01	1.90
SK1282	0.95	0.90	1.37	1.30	0.95	0.90	1.27	1.20	1.00	0.95	1.00	0.95
SK2282	1.74	1.65	2.54	2.40	2.01	1.90	2.11	2.00	1.90	1.80	1.90	1.80
SK2382	1.80	1.70	2.75	2.60	2.01	1.90	3.28	3.10	1.59	1.50	1.59	1.50
SK3282	3.33	3.15	4.33	4.10	3.44	3.25	4.33	4.10	3.33	3.15	3.33	3.15
SK3382	4.33	4.10	5.18	4.90	3.49	3.30	5.92	5.60	3.49	3.30	3.49	3.30
SK4282	4.97	4.70	6.45	6.10	5.02	4.75	5.71	5.40	4.97	4.70	4.97	4.70
SK4382	6.24	5.90	7.19	6.80	5.18	4.90	8.77	8.30	5.18	4.90	5.18	4.90
SK5282	7.93	7.50	9.30	8.80	7.93	7.50	9.30	8.80	7.61	7.20	7.61	7.20
SK5382	13.2	12.5	12.7	12.0	7.08	6.70	14.8	14.0	8.77	8.30	8.77	8.30
SK6282	18.0	17.0	14.8	14.0	12.7	12.0	18.5	17.5	10.6	10.0	14.8	14.0
SK6382	17.4	16.5	13.7	13.0	10.1	9.60	19.0	18.0	14.8	14.0	13.2	12.5
SK7282	26.4	25.0	22.2	21.0	21.1	20.0	28.5	27.0	16.9	16.0	22.2	21.0
SK7382	23.3	22.0	21.1	20.0	16.9	16.0	26.4	25.0	24.3	23.0	20.1	19.0
SK8282	39.1	37.0	34.9	33.0	31.7	30.0	43.3	41.0	32.8	31.0	32.8	31.0
SK8382	35.9	34.0	33.8	32.0	26.4	25.0	40.2	38.0	37.0	35.0	31.7	30.0
SK9282	78.2	74.0	74.0	70.0	58.1	55.0	76.1	72.0	63.4	60.0	62.4	59.0
SK9382	77.2	73.0	74.0	70.0	47.6	45.0	78.2	74.0	68.7	65.0	63.4	60.0
SK10282*	95.1	90.0	95.1	90.0	42.3	40.0	95.1	90.0	63.4	60.0	86.7	82.0
SK10382*	89.8	85.0	106	100	77.2	73.0	106	100	84.6	80.0	84.6	80.0
SK11282*	174	165	169	160	153	145	206	195	106	100	148	140
SK11382*	169	160	164	155	148	140	222	210	164	155	143	135
SK12382*	169	160	164	155	148	140	222	210	164	155	143	135

* These units shipped without oil

Send Quote Requests to info@automatedpt.com
Call +1(800)985-6929 To Order or Order Online At Nordgearmotors.com

Helical-Bevel Foot Mount Positions & Oil Fill Quantities



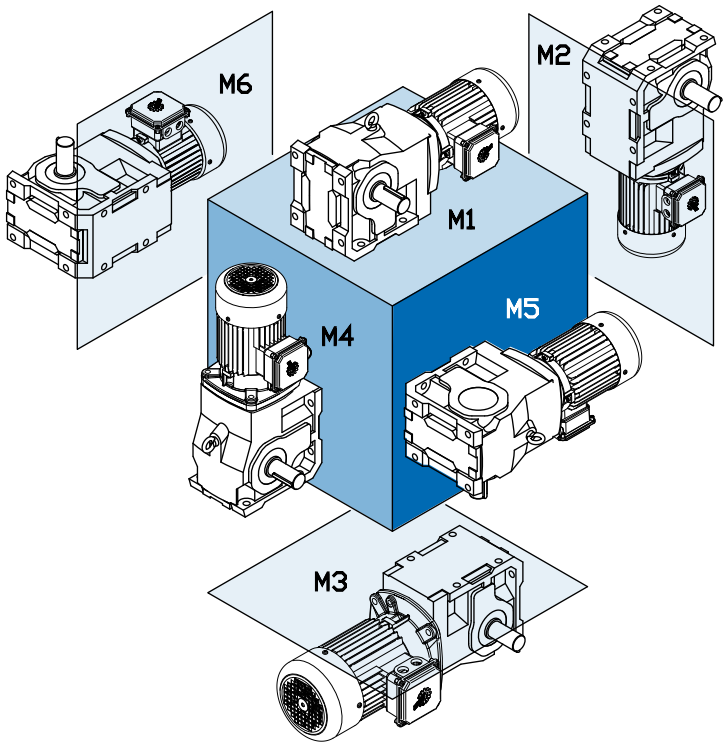

Mounting Position	M1		M2		M3		M4		M5		M6	
	Quarts	Liters	Quarts	Liters	Quarts	Liters	Quarts	Liters	Quarts	Liters	Quarts	Liters
SK92072	0.42	0.40	0.63	0.60	0.53	0.50	0.53	0.50	0.42	0.40	0.42	0.40
SK92172	0.58	0.55	0.95	0.90	1.00	0.95	1.16	1.10	0.79	0.75	0.66	0.62
SK92372	0.95	0.90	1.37	1.30	1.53	1.45	1.69	1.60	1.27	1.20	1.27	1.20
SK92672	1.90	1.80	3.70	3.50	3.38	3.20	3.59	3.40	2.75	2.60	2.75	2.60
SK92772	2.43	2.30	4.76	4.50	4.86	4.60	5.60	5.30	4.33	4.10	4.33	4.10
SK9012.1	0.74	0.70	1.69	1.60	2.01	1.90	2.54	2.40	1.27	1.20	1.80	1.70
SK9013.1	1.27	1.20	2.11	2.00	2.33	2.20	3.17	3.00	1.48	1.40	2.01	1.90
SK9016.1	0.74	0.70	1.69	1.60	2.01	1.90	2.54	2.40	1.27	1.20	1.80	1.70
SK9017.1	1.27	1.20	2.11	2.00	2.33	2.20	3.17	3.00	1.48	1.40	2.01	1.90
SK9022.1	1.37	1.30	2.75	2.60	3.70	3.50	4.44	4.20	2.11	2.00	2.96	2.80
SK9023.1	2.54	2.40	3.17	3.00	4.02	3.80	5.60	5.30	2.33	2.20	3.28	3.10
SK9032.1	1.80	1.70	5.07	4.80	6.76	6.40	7.08	6.70	4.33	4.10	5.39	5.10
SK9033.1	3.49	3.30	6.98	6.60	7.40	7.00	8.24	7.80	4.55	4.30	5.39	5.10
SK9042.1	4.65	4.40	9.20	8.70	10.6	10.0	10.4	9.80	7.19	6.80	7.93	7.50
SK9043.1	4.86	4.60	10.8	10.2	11.3	10.7	13.5	12.8	5.50	5.20	7.08	6.70
SK9052.1	6.87	6.50	16.9	16.0	20.1	19.0	22.7	21.5	11.6	11.0	16.4	15.5
SK9053.1	10.6	10.0	18.0	17.0	21.1	20.0	25.6	24.2	12.2	11.5	17.4	16.5
SK9072.1	10.6	10.0	29.1	27.5	33.8	32.0	38.1	36.0	19.0	18.0	25.4	24.0
SK9082.1	18.0	17.0	54.4	51.5	66.1	62.5	75.6	71.5	34.9	33.0	49.2	46.5
SK9086.1	30.7	29.0	77.2	73.0	89.8	85.0	108	102	50.7	48.0	65.5	62.0
SK9092.1	38.1	36.0	166	157	180	170	182	172	84.6	80.0	95.1	90.0
SK9096.1*	74.0	70.0	198	187	205	194	268	254	115	109	161	152

* These units shipped without oil

Send Quote Requests to info@automatedpt.com
Call +1(800)985-6929 To Order or Order Online At Nordgearmotors.com

Send Quote Requests to info@automatedpt.com
Call +1(800)985-6929 To Order or Order Online At Nordgearmotors.com

Helical-Bevel Flange Mount Positions & Oil Fill Quantities

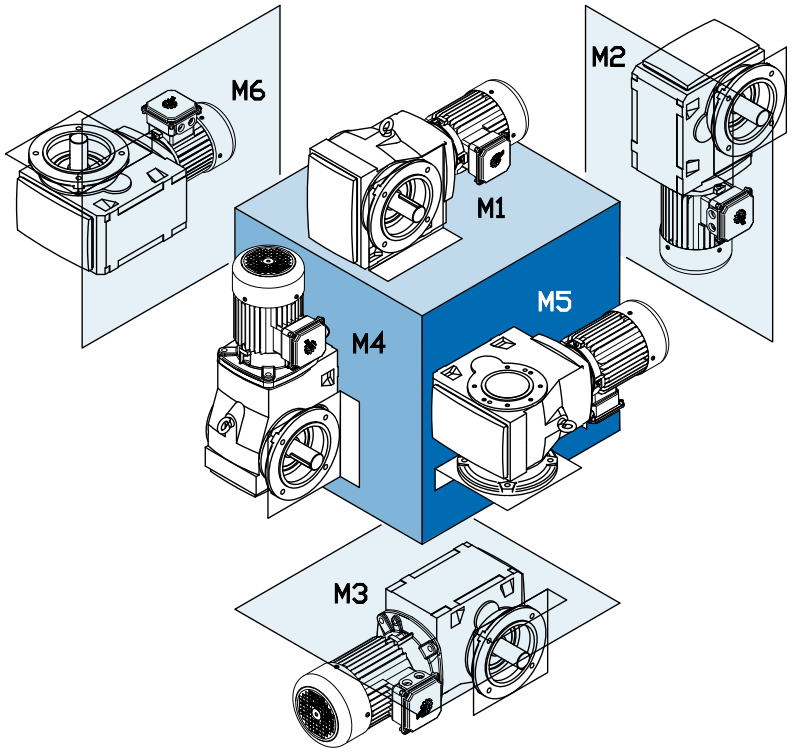

Mounting Position	M1		M2		M3		M4		M5		M6	
	Quarts	Liters	Quarts	Liters	Quarts	Liters	Quarts	Liters	Quarts	Liters	Quarts	Liters
SK92072	0.42	0.40	0.63	0.60	0.53	0.50	0.53	0.50	0.42	0.40	0.42	0.40
SK92172	0.53	0.50	0.97	0.92	0.92	0.87	1.11	1.05	0.79	0.75	0.69	0.65
SK92372	1.22	1.15	1.59	1.50	1.27	1.20	1.80	1.70	1.22	1.15	1.22	1.15
SK92672	1.64	1.55	2.96	2.80	2.64	2.50	3.49	3.30	2.54	2.40	2.54	2.40
SK92772	2.91	2.75	4.65	4.40	4.76	4.50	4.76	4.50	3.70	3.50	3.70	3.50
SK9012.1	0.74	0.70	2.01	1.90	2.01	1.90	2.54	2.40	1.27	1.20	1.80	1.70
SK9013.1	1.27	1.20	2.43	2.30	2.33	2.20	3.17	3.00	1.48	1.40	2.01	1.90
SK9016.1	0.74	0.70	2.01	1.90	2.01	1.90	2.54	2.40	1.27	1.20	1.80	1.70
SK9017.1	1.27	1.20	2.43	2.30	2.33	2.20	3.17	3.00	1.48	1.40	2.01	1.90
SK9022.1	1.37	1.30	2.75	2.60	3.70	3.50	4.44	4.20	2.11	2.00	2.96	2.80
SK9023.1	2.54	2.40	3.17	3.00	4.02	3.80	5.60	5.30	2.33	2.20	3.28	3.10
SK9032.1	2.01	1.90	5.50	5.20	6.76	6.40	7.72	7.30	3.49	3.30	5.39	5.10
SK9033.1	4.02	3.80	6.02	5.70	7.29	6.90	8.98	8.50	3.81	3.60	5.92	5.60
SK9042.1	3.81	3.60	10.30	9.70	12.0	11.4	12.2	11.5	6.87	6.50	8.67	8.20
SK9043.1	6.02	5.70	10.8	10.2	15.5	14.7	15.5	14.7	6.98	6.60	10.1	9.60
SK9052.1	7.93	7.50	17.4	16.5	21.1	20.0	23.8	22.5	12.2	11.5	19.0	18.0
SK9053.1	13.2	12.5	19.0	18.0	22.7	21.5	28.0	26.5	13.7	13.0	18.0	17.0
SK9072.1	12.7	12.0	29.1	27.5	34.9	33.0	40.7	38.5	20.1	19.0	27.5	26.0
SK9082.1	22.2	21.0	57.1	54.0	69.8	66.0	84.6	80.0	40.2	38.0	55.0	52.0
SK9086.1	38.1	36.0	82.4	78.0	96.2	91.0	107	101	56.0	53.0	80.3	76.0
SK9092.1	42.3	40.0	137	130	163	154	185	175	86.7	82.0	96.2	91.0
SK9096.1*	74.0	70.0	198	187	204	193	272	257	119	113	165	156

* These units shipped without oil

Send Quote Requests to info@automatedpt.com
Call +1(800)985-6929 To Order or Order Online At Nordgearmotors.com

Helical-Worm Foot Mount Positions & Oil Fill Quantities



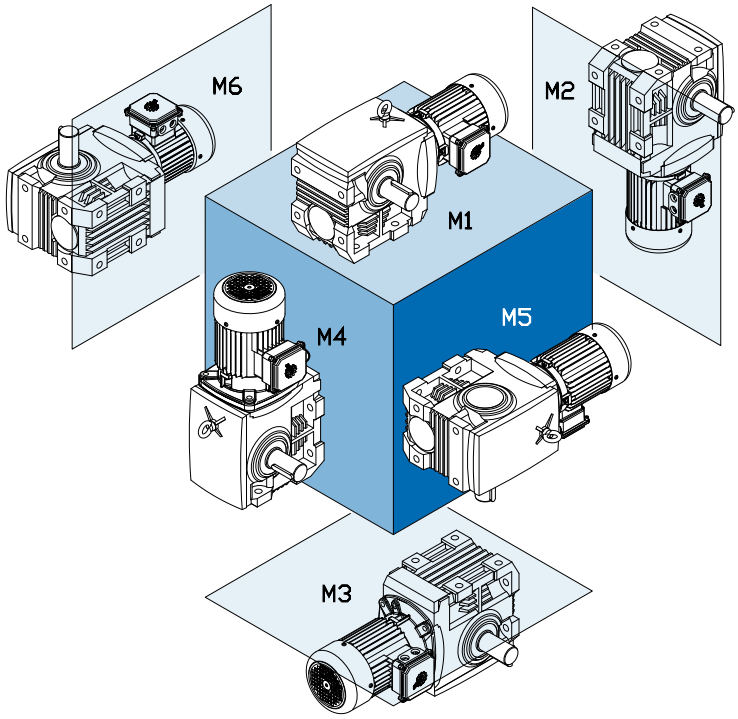

Mounting Position	M1		M2		M3		M4		M5		M6	
	Quarts	Liters	Quarts	Liters	Quarts	Liters	Quarts	Liters	Quarts	Liters	Quarts	Liters
SK02040	0.48	0.45	0.63	0.60	0.63	0.60	0.63	0.60	0.53	0.50	0.53	0.50
SK02050	0.42	0.40	1.27	1.20	0.74	0.70	1.22	1.15	0.74	0.70	0.74	0.70
SK13050	1.00	0.95	1.64	1.55	1.16	1.10	1.53	1.45	1.00	0.95	1.00	0.95
SK12063	0.63	0.60	1.80	1.70	1.27	1.20	1.64	1.55	1.06	1.00	1.06	1.00
SK13063	0.90	0.85	2.43	2.30	1.69	1.60	2.11	2.00	1.32	1.25	1.32	1.25
SK12080	0.85	0.80	2.75	2.60	1.80	1.70	2.85	2.70	1.80	1.70	1.80	1.70
SK13080	1.80	1.70	3.38	3.20	2.22	2.10	3.59	3.40	2.06	1.95	2.06	1.95
SK32100	1.69	1.60	5.81	5.50	3.59	3.40	5.71	5.40	3.38	3.20	3.38	3.20
SK33100	2.22	2.10	8.03	7.60	4.23	4.00	7.19	6.80	3.91	3.70	3.91	3.70
SK42125	2.96	2.80	11.6	11.0	6.55	6.20	10.9	10.3	6.13	5.80	6.13	5.80
SK43125	8.24	7.80	14.8	14.0	7.61	7.20	14.3	13.5	7.08	6.70	7.08	6.70

Send Quote Requests to info@automatedpt.com
Call +1(800)985-6929 To Order or Order Online At Nordgearmotors.com

Send Quote Requests to info@automatedpt.com
Call +1(800)985-6929 To Order or Order Online At Nordgearmotors.com

Helical-Worm Flange Mount Positions & Oil Fill Quantities

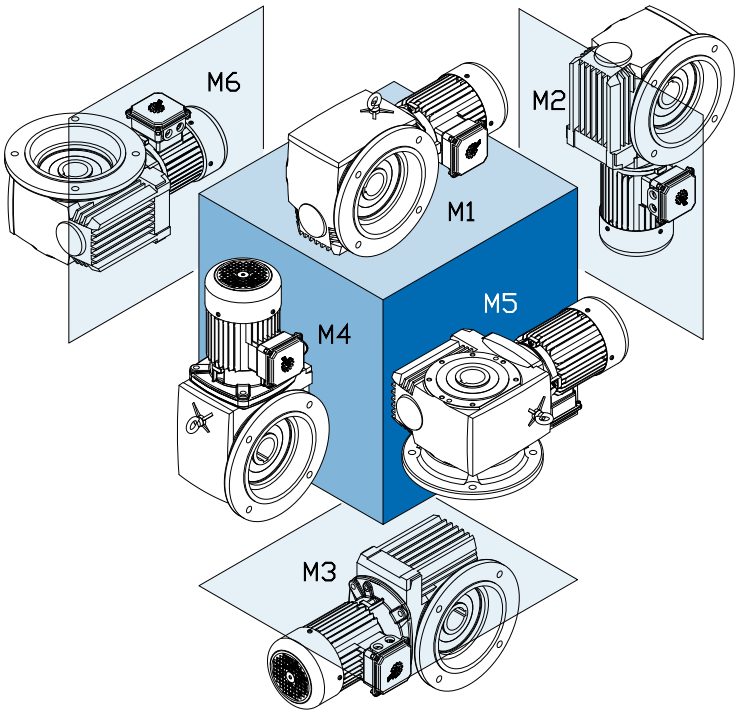

Mounting Position	M1		M2		M3		M4		M5		M6	
	Quarts	Liters	Quarts	Liters	Quarts	Liters	Quarts	Liters	Quarts	Liters	Quarts	Liters
SK02040	0.53	0.50	0.85	0.80	0.79	0.75	0.63	0.60	0.53	0.50	0.53	0.50
SK02050	0.48	0.45	1.48	1.40	0.95	0.90	1.32	1.25	1.06	1.00	1.06	1.00
SK13050	0.95	0.90	1.90	1.80	1.22	1.15	1.85	1.75	1.32	1.25	1.32	1.25
SK12063	0.53	0.50	1.69	1.60	1.48	1.40	1.90	1.80	1.59	1.50	1.59	1.50
SK13063	1.00	0.95	2.22	2.10	1.74	1.65	2.27	2.15	1.85	1.75	1.85	1.75
SK12080	1.00	0.95	3.38	3.20	2.64	2.50	3.91	3.70	2.64	2.50	2.64	2.50
SK13080	1.48	1.40	4.44	4.20	2.91	2.75	4.44	4.20	2.91	2.75	2.91	2.75
SK32100	1.59	1.50	7.50	7.10	5.18	4.90	7.50	7.10	4.65	4.40	4.65	4.40
SK33100	2.43	2.30	8.03	7.60	5.81	5.50	8.24	7.80	5.13	4.85	5.13	4.85
SK42125	3.49	3.30	11.8	11.2	6.45	6.10	11.0	10.4	7.19	6.80	7.19	6.80
SK43125	4.55	4.30	13.6	12.9	7.50	7.10	12.8	12.1	8.14	7.70	8.14	7.70

Send Quote Requests to info@automatedpt.com
Call +1(800)985-6929 To Order or Order Online At Nordgearmotors.com

Send Quote Requests to info@automatedpt.com Call +1(800)985-6929 To Order or Order Online At Nordgearmotors.com

Engineering OHL & Thrust

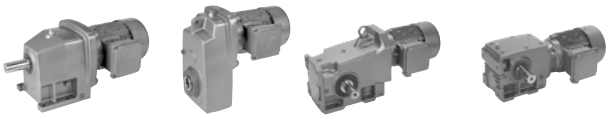

OVERHUNG LOADS

Maximum values for output shaft loads are given in pounds of radial capacity as shown in the gearmotor selection pages under the F_R column. Input shaft capacities are given on pages 58 - 59 as F_{R1}.

The listed maximum loads are

- to be applied at the midpoint of the shaft
- calculated in the least favorable loading direction
- without thrust loads.

Keeping the operational loads at or below the rated capacity will ensure bearing performance for approximately 5,000 hours of service or greater.

The permissible overhung load values listed are based on the least favorable loading direction. For higher overhung load values please contact NORD with the exact loading direction and life requirements.

OHL CAPACITY FOR REDUCERS

If a C-face reducer or solid input shaft reducer is used, the Gearmotor Selection pages should be used to determine the maximum overhung load F_Q. Assign the HP value of the motor driving the system to the reducer. Turn to the Gearmotor Selection pages and match the HP, gear unit and ratio to one shown in the table. Select the OHL capacity (F_Q) from the appropriate column.

CALCULATING OHL

When an in-line coupling is mounted on a shaft to connect power then no overhung load exists. However, if power transmission components such as sprockets or sheaves are mounted directly onto the shaft they will deliver a rotating load at a right angle to that shaft. The effective overhung load on that shaft will be determined as follows:

$$F_{OHL} = \frac{2 \times T \times f_z}{d_o}$$

Where:

F_{OHL} = Calculated OHL on gearbox shaft [lb]
T = Load torque on shaft [lb-in]
d_0 = Pitch diameter of overhung component [in]
f_z = Power transmission component factor

Table for f_Z factor

Transmission Component	Factor f_z	Notes
Gear	1.00	17 teeth or less
Gear	1.15	18 teeth or more
Chain Sprocket	1.40	13 teeth or less
Chain Sprocket	1.20	13 to 20 teeth
Chain Sprocket	1.00	21 teeth or more
Timing Belt Pulley	1.50	
V-Belt Pulley	1.70	
Flat Belt Pulley	2.50	

After calculating OHL actual compare to the overhung load capacity found in the tables.

$$F_{OHL} \leq F_R \text{ or } F_{R1}$$

If F_{OHL} exceeds the rated capacity (F_R or F_{R1}) of the speed reducer, either heavy-duty bearings or a larger gearbox must be selected.

LOAD NOT AT MIDPOINT OF SHAFT

If the load is not applied to the midpoint of the shaft, the maximum overhung load capacity F_Q or F_{Q1} must be modified. The new permissible overhung load F_{QX} or F_{Q1X} must be calculated at a point on the shaft (x) by

$$F_{RX} = \frac{F_R \times z}{y + x} \qquad F_{R1X} = \frac{F_{R1} \times z}{y + x}$$

Shaft strength must also be considered by these equations:

$$F_{RSS} = \frac{c}{f + x} \qquad F_{R1SS} = \frac{c}{f + x}$$

Where:

F_R = permissible OHL from gearmotor tables [lb]
x = distance from shaft shoulder to the point where the load is applied [in]
c = factor from table [lb-in]
f = factor from table [in]
y = factor from table [in]
z = factor from table [in]
F_{RX} = new permissible OHL at 'x' distance from output shaft shoulder [lb]
F_{R1X} = new permissible OHL at 'x' distance from input shaft shoulder [lb]
F_{RSS} = output shaft strength capacity [lb]
F_{R1SS} = input shaft strength capacity [lb]

After calculating the above the lower of the two will be the adjusted permissible overhung load ($OHL_{adjusted}$) at 'x' distance from the shaft shoulder and is compared to the F_{OHL} value.

$F_{OHL} \leq F_{RX}$

Unit sizing with this method takes into consideration non-midpoint load location and ensures acceptable bearing and shaft strength.

THRUST LOADS

Loads that are directed towards or away from the gearbox along the axis of the shaft are considered to be AXIAL loads. Commonly this loading is called THRUST. Output shaft THRUST capacity (FA) can be found in the Gearmotor Selection tables adjacent to the OHL values. Input shaft capacity is given on pages 58 - 59 as F_{A1}:

- Capacity shown is the lowest value of either a load directed into or away from the unit.
- Loads cannot exceeded the values shown in the tables
- Capacity listed is for pure axial loads with no overhung load. If loads are kept at or below the rated capacity, reasonable bearing life can be expected. Contact NORD for combination load or a more exact examination of the application.

Send Quote Requests to info@automatedpt.com
Call +1(800)985-6929 To Order or Order Online At Nordgearmotors.com

DRIVESYSTEMS



In-line Overhung Load Calculation Tables

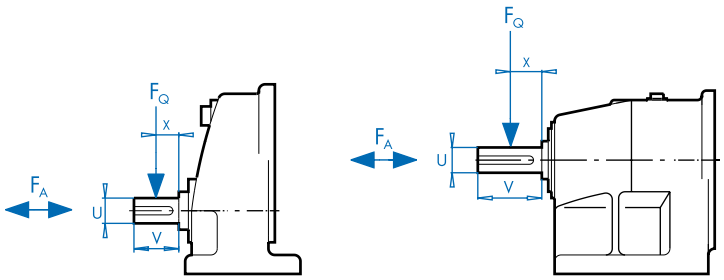

F_{OHL} = Calculated OHL on gearbox shaft [lb]
T = Load torque on shaft [lb-in]
d_o = Pitch diameter of overhung component [in]
f_z = Power transmission component factor

$$F_{OHL} = \frac{2 \times T \times f_z}{d_o}$$

After calculating F_{OHL} compare to the overhung load capacity found in the tables.

$F_{OHL} \leq F_R$ or F_{R1}

If F_{OHL} exceeds the rated capacity (F_R or F_{R1}) of the speed reducer then either heavy-duty bearings or a larger gearbox must be selected.

Calculation Table for OHL at Output Shaft for In-line Units

Gearbox Type	y [in]	z [in]	c Standard Bearings [lb-in]	c VL Bearings [lb-in]	f [in]	U [in]	V [in]	T_{2max} [lb-in]
SK 11E	2.56	3.35	*	*	1.54	0.750	1.50	513
SK 21E	3.03	4.02	*	*	1.97	1.000	2.13	681
SK 31E	4.11	5.30	*	*	2.74	1.250	2.75	1637
SK 41E	4.39	5.77	*	*	2.64	1.375	3.00	2567
SK 51E	4.92	6.50	*	*	2.91	1.625	3.25	4354
SK 02 SK 03	2.51	3.30	531	885	0.46	0.750	1.50	876 973
SK 12 SK 13	2.89	3.88	1,062	1,593	0.55	1.000	2.13	1628 1717
SK 22 SK 23	3.39	4.57	1,682	2,655	0.55	1.250	2.75	3310 3009
SK 32 SK 33	4.43	6.00	3,452	5,310	1.18	1.625	3.25	6284 5947
SK 42 SK 43	4.84	6.61	3,717	6,461	1.18	1.875	3.50	11,009 11,408
SK 52 SK 53	5.89	8.05	8,142	13,806	1.38	2.250	4.00	17,912 19,753
SK 62 SK 63	7.52	10.08	12,921	21,771	1.38	2.500	5.00	27,612 32,745
SK 72 SK 73	8.35	11.10	18,851	39,383	1.46	3.000	5.50	41,666 50,003
SK 82 SK 83	9.78	13.13	37,254	60,977	1.50	3.500	6.75	64,127 81,243
SK 92 SK 93	10.94	15.08	71,420	110,625	1.61	4.250	8.50	95,359 123,900
SK 102 SK 103	12.74	17.64	131,511	202,134	1.81	5.250	10.00	153,698 204,966

* - Consult Factory for calculation

Send Quote Requests to info@automatedpt.com
Call +1(800)985-6929 To Order or Order Online At Nordgearmotors.com

Clincher™ Overhung Load Calculation Tables



DRIVESYSTEMS

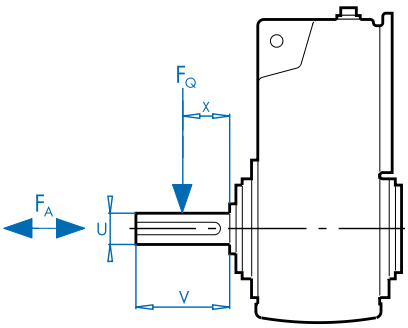

F_{OHL} = Calculated OHL on gearbox shaft [lb]
T = Load torque on shaft [lb-in]
d_0 = Pitch diameter of overhung component [in]
f_z = Power transmission component factor

$$F_{OHL} = \frac{2 \times T \times f_z}{d_o}$$

After calculating F_{OHL} compare to the overhung load capacity found in the tables.

$F_{OHL} \leq F_R$ or F_{R1}

If F_{OHL} exceeds the rated capacity (F_R or F_{R1}) of the speed reducer then either heavy-duty bearings or a larger gearbox must be selected.

Calculation Table for OHL at Output Shaft for Clincher™ Units

Gearbox Type	y [in]	z [in]	c Standard Bearings [lb-in]	c VL Bearings [lb-in]	f [in]	U [in]	V [in]	T_{2max} [lb-in]
SK 0182NB	3.15	4.11	1,151	1,593	0	0.750	1.50	1,027
SK 0282NB	4.41	5.43	1,062	1,505	0	1.000	2.13	1,460
SK 1382NB	5.71	6.93	1,416	2,301	0	1.250	2.75	3,275
SK 1282	3.74	4.93	1,593	–	0	1.250	2.75	2,620
SK 2282 SK 2382	4.31	5.69	2,390	3,894	0	1.375	2.75	4,983
SK 3282 SK 3382	5.34	7.11	5,399	8,319	0	1.875	3.50	8,983 9,195
SK 4282 SK 4382	6.22	8.39	7,965	13,098	0	2.250	4.00	17,700 18,381
SK 5282 SK 5382	7.07	9.63	14,426	23,010	0	2.500	5.00	28,630 28,320
SK 6282 SK 6382	9.28	12.03	16,107	30,267	0	3.000	5.50	40,152 53,100
SK 7282 SK 7382	9.96	13.31	33,719	54,782	0	3.500	6.75	57,286 73,455
SK 8282 SK 8392	11.81	15.94	73,544	113,192	0	4.250	8.50	93,969 116,820
SK 9282 SK 9382	13.92	18.84	144,432	220,542	0	5.250	9.84	158,681 224,790
SK 10282 SK 10382	16.73	22.64	–	167,708	0	6.250	11.81	283,200 329,220
SK 11282 SK 11382	17.83	23.74	–	169,478	0	7.000	11.81	371,700 610,650
SK 12382	17.83	23.74	–	179,655	0	7.000	11.81	796,500

Send Quote Requests to info@automatedpt.com
Call +1(800)985-6929 To Order or Order Online At Nordgearmotors.com

Send Quote Requests to info@automatedpt.com
Call +1(800)985-6929 To Order or Order Online At Nordgearmotors.com



Helical-Bevel Overhung Load Calculation Tables

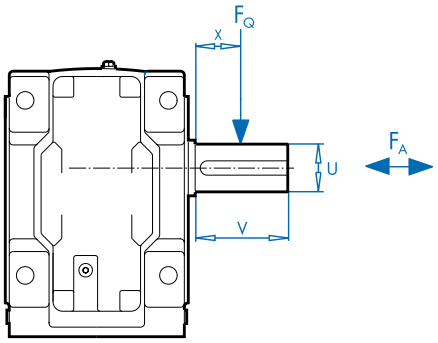

F_{OHL} = Calculated OHL on gearbox shaft [lb]
T = Load torque on shaft [lb-in]
d_0 = Pitch diameter of overhung component [in]
f_z = Power transmission component factor

$$F_{OHL} = \frac{2 \times T \times f_z}{d_o}$$

After calculating F_{OHL} compare to the overhung load capacity found in the tables.

$F_{OHL} \leq F_R$ or F_{R1}

If F_{OHL} exceeds the rated capacity (F_R or F_{R1}) of the speed reducer then either heavy-duty bearings or a larger gearbox must be selected.

Calculation Table for OHL at Output Shaft for Bevel Units

Gearbox Type	y [in]	z [in]	c Standard Bearings [lb-in]	c VL Bearings [lb-in]	f [in]	U [in]	V [in]	T_{2max} [lb-in]
SK 92072	3.74	4.53	531	–	0	0.750	1.50	797
SK 92172	4.37	5.16	443	–	0	0.750	1.50	1,062
SK 92372	5.04	6.02	708	–	0	1.000	2.13	2,036
SK 92672	5.35	6.54	1,062	–	0	1.000	2.75	3,363
SK 92772	6.02	7.32	1,416	–	0	1.375	3.00	5,841
SK 9012.1 **SK 9013.1**	4.37	5.55	1,239	2,124	0	1.250	2.36	3,540
SK 9016.1 **SK 9017.1**	4.37	5.75	2,213	3,629	0	1.250	2.76	5,399
SK 9022.1 **SK 9023.1**	5.67	7.05	1,505	2,655	0	1.375	2.76	7,611
SK 9032.1 **SK 9033.1**	6.75	8.52	2,567	5,133	0	1.750	3.54	13,718
SK 9042.1 **SK 9043.1**	7.13	9.49	10,797	17,162	0	2.375	4.72	24,780
SK 9052.1 **SK 9053.1**	9.33	12.09	15,488	27,258	0	2.875	5.51	42,480
SK 9072.1	11.06	14.41	39,737	62,393	0	3.625	6.69	75,225
SK 9082.1	12.86	17.00	73,986	113,457	0	4.375	8.27	115,050
SK 9086.1	16.61	20.75	84,606	138,060	0	4.750	8.27	177,000
SK 9092.1	20.28	25.20	127,440	217,799	0	5.500	9.84	283,200
SK 9096.1	21.65	27.95	431,239	–	0	5.500	12.60	442,500

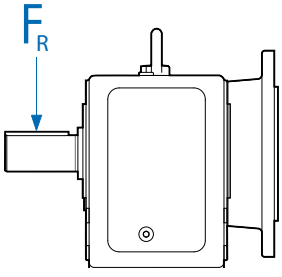

CAUTION

When gear units are flange mounted opposite shaft, their OHL capacity is greatly reduced compared to the standard catalog ratings. Please consult NORD for details on OHL ratings.

Send Quote Requests to info@automatedpt.com
Call +1(800)985-6929 To Order or Order Online At Nordgearmotors.com

Helical-Worm Overhung Load Calculation Tables



DRIVESYSTEMS

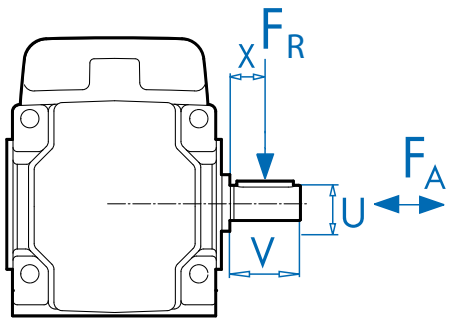

F_{OHL} = Calculated OHL on gearbox shaft [lb]
T = Load torque on shaft [lb-in]
d_0 = Pitch diameter of overhung component [in]
f_z = Power transmission component factor

$$F_{OHL} = \frac{2 \times T \times f_z}{d_o}$$

After calculating F_{OHL} compare to the overhung load capacity found in the tables.

$F_{OHL} \leq F_R$ or F_{R1}

If F_{OHL} exceeds the rated capacity (F_R or F_{R1}) of the speed reducer then either heavy-duty bearings or a larger gearbox must be selected.

Calculation Table for OHL at Output Shaft for Worm Units

Gearbox Type	y [in]	z [in]	c Standard Bearings [lb-in]	c VL Bearings [lb-in]	f [in]	U [in]	V [in]	T_{2max} [lb-in]
SK 02040	3.92	4.55	620	–	0	0.750	1.50	832
SK 02050	4.09	5.08	1,062	1,682	0	1.000	2.12	1,487
SK 13050								1,584
SK 12063	4.67	5.85	1,682	2,655	0	0.250	2.75	3,115
SK 13063								3,336
SK 12080	5.91	7.28	1,859	3,629	0	1.375	2.75	6,230
SK 13080								6,744
SK 32100	7.05	8.82	4,514	8,319	0	1.875	3.50	12,558
SK 33100								13,974
SK 42125	9.19	11.56	11,771	19,382	0	2.375	4.50	24,276
SK 43125								27,063

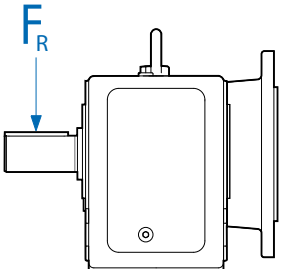

CAUTION

When gear units are flange mounted opposite shaft, their OHL capacity is greatly reduced compared to the standard catalog ratings. Please consult NORD for details on OHL ratings.

Send Quote Requests to info@automatedpt.com
Call +1(800)985-6929 To Order or Order Online At Nordgearmotors.com

Send Quote Requests to info@automatedpt.com
Call +1(800)985-6929 To Order or Order Online At Nordgearmotors.com

Input Shaft Overhung Load Calculation Tables

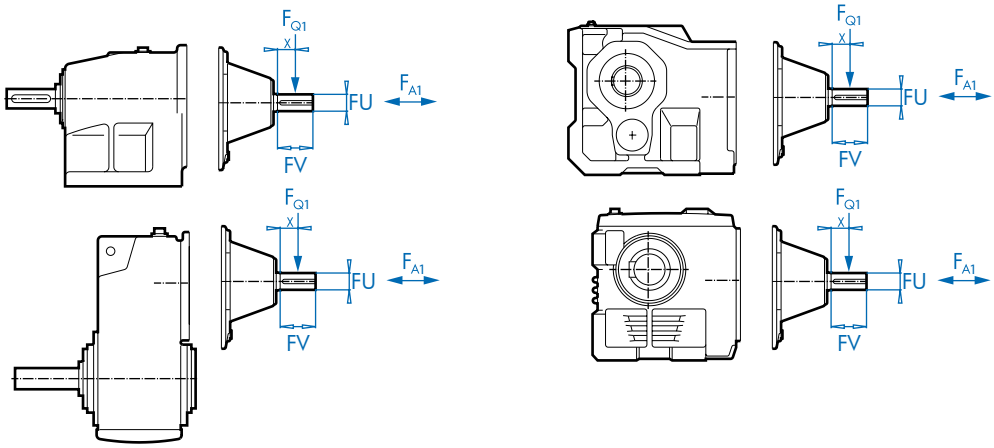

Calculation Table for OHL at Input Shaft

Helical In-line Gearboxes	Clincher™ Gearboxes	Bevel Gearboxes	Worm Gearboxes	y [in]	z [in]	c [lb-in]	FU [in]	FV [in]
	SK 0182 NB SK 0282 NB	SK 92072 SK 92172		2.30	3.09	239	0.500	1.50
	SK 1382 NB	SK 92372	SK 02040	2.30	3.09	327	0.625	1.50
		SK 92672		2.34	3.13	283	0.750	1.50
		SK 92772		2.72	3.70	965	0.875	2.00
SK 02 SK 03 SK 11E SK 12 SK 13 SK 23 SK 33N	SK 1282 SK 2382 SK 3382	SK 9012.1 SK 9013.1 SK 9016.1 SK 9017.1 SK 9022.1 SK 9023.1 SK 9033.1	SK 02050 SK 12063 SK 12080 SK 13050 SK 13063 SK 13080 SK 33100	2.76	3.54	322	0.625	1.50
SK 21E SK 31E SK 22 SK 32 SK 43 SK 53	SK 2282 SK 3282 SK 4382 SK 5382	SK 9032.1 SK 9043.1 SK 9053.1	SK 32100 SK 43215	3.80	4.78	947	0.875	2.00
SK 41E SK 51E SK 42 SK 52 SK 63	SK 4282 SK 5282 SK 6382	SK 9042.1 SK 9052.1	SK 42125	4.35	5.93	4,160	1.500	3.12
SK 62 SK 72 SK 73 SK 83 SK 93	SK 6282 SK 7282 SK 7382 SK 8382 SK 9382	SK 9072.1		5.89	8.05	4,071	1.625	4.38
SK 82 SK 92 SK 103	SK 8282 SK 9282	SK 9082.1 SK 9086.1 SK 9092.1		8.17	10.93	16,107	2.500	5.50
SK 102				8.84	11.59	14,691	2.500	5.50
	SK 10282 SK 10382 SK 11282 SK 11382 SK 12382			14.57	17.32	Calculation Upon Request	2.750	5.50

Send Quote Requests to info@automatedpt.com
Call +1(800)985-6929 To Order or Order Online At Nordgearmotors.com

Input Shaft - W
Overhung & Axial Loads



DRIVESYSTEMS

Permissable Overhung (F_{R1}) & Axial (Thrust) (F_{A1}) Loads at Input Shaft [lbs]

Gearbox Type				Maximum Overhung Loads F_{Q1} and Axial Loads F_{A1}											
Helical In-line Gear Units	Clincher™ Gear Units	Helical-bevel Gear Units	Worm Gear Units												
				Power Pn [HP]											
				0.16	0.25	0.33	0.50	0.75	1.00	1.50	2.00				
	SK 0182 NB	SK 92072		**FR1 [Lbs]** Application of load at midpoint of shaft											
	SK 0282 NB	SK 92172		124	122	119	113	106	98	83	68				
				FA1 [Lbs]											
				277	252	224	200	173	131	79	65				
				Power Pn [HP]											
				0.16	0.25	0.33	0.50	0.75	1.00	1.50	2.00	3.00	5.00		
	SK 1382NB	SK92372	SK 02040	**FR1 [Lbs]** Application of load at midpoint of shaft											
				191	185	176	169	162	158	136	97	95	52		
				FA1 [Lbs]											
				277	252	224	200	173	131	79	65	45	34		
				Power Pn [HP]											
				0.16	0.25	0.33	0.50	0.75	1.00	1.50	2.00	3.00	5.00	7.50	10.0
		SK 92672		**FR1 [Lbs]** Application of load at midpoint of shaft											
				479	743	466	461	448	434	407	414	389	362	230	225
				FA1 [Lbs]											
				659	646	626	587	558	525	467	441	392	329	146	101
				Power Pn [HP]											
				0.16	0.25	0.33	0.50	0.75	1.00	1.50	2.00	3.00	5.00	7.50	10.0
		SK 92772		**FR1 [Lbs]** Application of load at midpoint of shaft											
				518	495	473	466	495	450	439	428	410	394	338	293
				FA1 [Lbs]											
				833	788	720	698	675	630	585	540	495	450	405	338
SK 11E		SK 9012.1	SK 02050	**Power Pn [HP]**											
SK 02		SK 9016.1	SK 12063	0.16	0.25	0.33	0.50	0.75	1.00	1.50	2.00	3.00	5.00		
SK 12	SK 1282	SK 9022.1	SK 12080	**FR1 [Lbs]** Application of load at midpoint of shaft											
SK 03	SK 2382	SK 9013.1	SK 13050	191	185	176	169	162	158	136	97	95	52		
SK 13	SK 3382	SK 9017.1	SK 13063	**FA1 [Lbs]**											
SK 23		SK 9023.1	SK 13080	277	252	224	200	173	131	79	65	45	34		
SK 33N		SK 9033.1	SK 33100												
SK 21E				**Power Pn [HP]**											
SK 31E	SK 2282	SK 9032.1	SK 32100	0.16	0.25	0.33	0.50	0.75	1.00	1.50	2.00	3.00	5.00	7.50	10.0
SK 22	SK 3282	SK 9043.1	SK 43125	**FR1 [Lbs]** Application of load at midpoint of shaft											
SK 32	SK 4382	SK 9053.1		479	473	466	461	448	434	407	414	389	362	230	225
SK 43	SK 5382			**FA1 [Lbs]**											
SK 53				659	646	626	587	558	525	467	441	392	329	146	61

Send Quote Requests to info@automatedpt.com
Call +1(800)985-6929 To Order or Order Online At Nordgearmotors.com



Input Shaft - W
Overhung & Axial Loads

Permissable Overhung (F_{R1}) & Axial (Thrust) (F_{A1}) Loads at Input Shaft [lbs]

Gearbox Type				Maximum Overhung Loads F_{Q1} and Axial Loads F_{A1}												
Helical In-line Gear Units	Clincher™ Gear Units	Helical-bevel Gear Units	Worm Gear Units													
SK 41E				**Power Pn [HP]**												
SK 51E				0.50	0.75	1.00	1.50	2.00	3.00	5.00	7.50	10.0	15.0			
SK 42	SK 4282	SK 9042.1	SK 42125	**FR1 [Lbs]** Application of load at midpoint of shaft												
SK 52	SK 5282	SK 9052.1		470	626	538	603	585	547	518	407	281	106			
SK 63	SK 6382			**FA1 [Lbs]**												
				911	874	853	794	738	601	560	367	308	133			
SK 62	SK 6282			**Power Pn [HP]**												
SK 72	SK 7282			1.00	1.50	2.00	3.00	5.00	7.50	10.0	15.0	20.0	25.0	30.0	40.0	50.0
SK 73	SK 7382	SK 9062.1		**FR1 [Lbs]** Application of load at midpoint of shaft												
SK 83	SK 8382			995	965	950	911	873	774	756	617	605	524	412	275	196
SK 93	SK 9382			**FA1 [Lbs]**												
				1377	1323	1296	1238	1168	997	968	743	738	610	505	252	167
				Power Pn [HP]												
				5.00	7.50	10.0	15.0	20.0	25.0	30.0	40.0	50.0	60.0	75.0	100	125
SK 82	SK 8282	SK 9082.1		**FR1 [Lbs]** Application of load at midpoint of shaft												
SK 92	SK 9282	SK 9086.1		2480	2421	2336	2219	2144	2102	2093	1897	1827	1868	1667	1038	1177
SK 102	SK 10382	SK 9092.1		**FA1 [Lbs]**												
				972	914	848	758	698	668	659	513	459	488	335	176	54
	SK 10282			**Power Pn [HP]**												
	SK 10382			15.0	20.0	25.0	30.0	40.0	50.0	60.0	75.0	100	125	150	200	
	SK 11282			**FR1 [Lbs]** Application of load at midpoint of shaft												
	SK 11382			3902	3845	3796	2624	3632	3530	3413	3265	2959	2723	2401	1544	
	SK 12382			**FA1 [Lbs]**												
				3013	3078	3020	2957	2815	2696	2630	2471	2156	1922	1602	1130	

Send Quote Requests to info@automatedpt.com
Call +1(800)985-6929 To Order or Order Online At Nordgearmotors.com

Reducer Tolerances



DRIVESYSTEMS

Solid Shaft Diameter Tolerance [in]		
> 0.375	≤ 1.750	+0.0000 / -0.0005
> 1.750	≤ 7.500	+0.0000 / -0.0010

All Keys and Keyways: Inch - ANSI B17

Solid Shaft Diameter Tolerance [mm]		
> 10	≤ 18	+0.012 / +0.001
> 18	≤ 30	+0.015 / +0.002
> 30	≤ 50	+0.018 / +0.002
> 50	≤ 80	+0.030 / +0.011
> 80	≤ 120	+0.035 / +0.013
> 120	≤ 180	+0.040 / +0.015
> 180	≤ 190	+0.046 / +0.017

All Keys and Keyways: Metric - DIN 6885, class m6

Solid Shaft Drill & Tap Shaft End - Threaded Holes [in]		
> ø 0.375	≤ ø 0.500	10-24 x 0.43
> ø 0.500	≤ ø 0.875	1/4-20 x 0.59
> ø 0.875	≤ ø 0.938	5/16-18 x 0.71
> ø 0.938	≤ ø 1.100	3/8-16 x 0.87
> ø 1.100	≤ ø 1.300	1/2-13 x 1.10
> ø 1.300	≤ ø 1.875	5/8-11 x 1.42
> ø 1.875	≤ ø 3.500	3/4-10 x 1.73
> ø 3.500	≤ ø 7.500	1-8 x 2.63
> ø 5.125	≤ ø 8.875	1 1/4-7 x 3.15*
> ø 6.000	≤ ø 8.875	1 3/8-6 x 3.46**

* **Only used on the SK9096.1 Helical-Bevel Gear Unit**

** **Only used on the SK10382.1 & SK11382.1 CLINCHER Gear Unit**

Solid Shaft Drill & Tap Shaft End - Threaded Holes [mm]		
> ø 10	≤ ø 13	M4 x 10
> ø 13	≤ ø 16	M5 x 12.5
> ø 16	≤ ø 21	M6 x 16
> ø 21	≤ ø 24	M8 x 19
> ø 24	≤ ø 30	M10 x 22
> ø 30	≤ ø 38	M12 x 28
> ø 38	≤ ø 50	M16 x 36
> ø 50	≤ ø 85	M20 x 42
> ø 85	≤ ø 130	M24 x 50
> ø 130	≤ ø 190	M30 x 60

Keyed Hollow Bore Tolerances [in]		
> ø 0.4375	≤ ø 1.6250	+0.0010 / -0.0000
> ø 1.6250	≤ ø 3.2500	+0.0012 / -0.0000
> ø 3.2500	≤ ø 7.0000	+0.0014 / -0.0000

Keyed Hollow Bore Tolerances [mm]		
> ø 10	≤ ø 18	+0.018 / -0.000
> ø 18	≤ ø 30	+0.021 / -0.000
> ø 30	≤ ø 50	+0.025 / -0.000
> ø 50	≤ ø 80	+0.030 / -0.000
> ø 80	≤ ø 120	+0.035 / -0.000
> ø 120	≤ ø 180	+0.040 / -0.000
> ø 180	≤ ø 190	+0.035 / -0.000

Metric hollow bore tolerances per ISO286-2, Class H7

Suggested Solid Shaft Tolerances for Keyed Hollow Bore [in]			
		Uniform Load	Shock Load
> ø 0.4375	≤ ø 0.8750	+0.0000 / -0.0005	+0.0000 / -0.0005
> ø 0.8750	≤ ø 4.5000	+0.0000 / -0.0010	+0.0000 / -0.0010
> ø 4.5000	≤ ø 7.0000	+0.0000 / -0.0012	+0.0000 / -0.0015

Suggested Solid Shaft Tolerances for Keyed Hollow Bore [mm]			
		Uniform Load ❶	Shock Load ❷
> ø 10	≤ ø 18	+0.000 / -0.011	+0.012 / +0.001
> ø 18	≤ ø 30	+0.000 / -0.013	+0.015 / +0.002
> ø 30	≤ ø 50	+0.000 / -0.016	+0.018 / +0.002
> ø 50	≤ ø 80	+0.000 / -0.019	+0.021 / +0.002
> ø 80	≤ ø 120	+0.000 / -0.022	+0.025 / +0.003
> ø 120	≤ ø 180	+0.000 / -0.025	+0.028 / +0.003
> ø 180	≤ ø 190	+0.000 / -0.029	+0.033 / +0.004

❶ **Uniform load: Mating shaft diameter tolerance per ISO286-2, class h6**

❷ **Shock load: Mating shaft diameter tolerance per ISO286-2, class k6**

Customer Shaft Diameter Tolerance w/ Shrink Disk [in]			
Shaft Diameter		Shaft Tolerance ❶	Bore Tolerance ❷
≥ ø 0.4375	≤ ø 0.6875	+0.0000 / -0.0004	+0.0007 / -0.0000
≥ ø 0.7500	≤ ø 1.1250	+0.0000 / -0.0005	+0.0008 / -0.0000
≥ ø 1.1250	≤ ø 1.9375	+0.0000 / -0.0006	+0.0009 / -0.0000
≥ ø 2.0000	≤ ø 3.1250	+0.0000 / -0.0007	+0.0011 / -0.0000
≥ ø 3.1875	≤ ø 4.6875	+0.0000 / -0.0008	+0.0013 / -0.0000
≥ ø 4.7500	≤ ø 7.0625	+0.0000 / -0.0009	+0.0015 / -0.0000
≥ ø 7.1250	≤ ø 7.5000	+0.0000 / -0.0011	+0.0018 / -0.0000

❶ **Inch Shaft Tolerances per ISO286-2, Class h6**

❷ **Inch hollow bore tolerances per ISO286-2, Class H7**

• **Solid Shaft finish to be 125 micro inches (3.2mm) or smoother**

Customer Shaft Diameter Tolerance w/ Shrink Disk [mm]			
Shaft Diameter		Shaft Tolerance ❶	Bore Tolerance ❷
> ø 10	≤ ø 18	+0.000 / -0.011	+0.018 / -0.000
> ø 18	≤ ø 30	+0.000 / -0.013	+0.021 / -0.000
> ø 30	≤ ø 50	+0.000 / -0.016	+0.025 / -0.000
> ø 50	≤ ø 80	+0.000 / -0.019	+0.030 / -0.000
> ø 80	≤ ø 120	+0.000 / -0.022	+0.035 / -0.000
> ø 120	≤ ø 180	+0.000 / -0.025	+0.040 / -0.000
> ø 180	≤ ø 190	+0.000 / -0.029	+0.046 / -0.000

❶ **Metric Shaft Tolerances per ISO286-2, Class h6**

❷ **Metric hollow bore tolerances per ISO286-2, Class H7**

• **Solid Shaft finish to be 125 micro inches (3.2mm) or smoother**

Flange Pilot (AK or AK1) Tolerance [in]			
Flange Pilot Diameter		Pilot Tolerance	Fit Class ❶
> ø 1.969	≤ ø 3.150	+0.0005 / -0.0003	j6
> ø 3.150	≤ ø 4.724	+0.0005 / -0.0004	j6
> ø 4.724	≤ ø 7.087	+0.0006 / -0.0004	j6
> ø 7.087	≤ ø 9.055	+0.0006 / -0.0005	j6
> ø 9.055	≤ ø 9.843	+0.0000 / -0.0011	h6
> ø 9.843	≤ ø 12.402	+0.0000 / -0.0013	h6
> ø 12.402	≤ ø 15.748	+0.0000 / -0.0014	h6
> ø 15.748	≤ ø 19.685	+0.0000 / -0.0016	h6

❶ **Inch Pilot Tolerances per ISO286-2**

Flange Pilot (AK or AK1) Tolerance [mm]			
Flange Pilot Diameter		Pilot Tolerance	Fit Class ❶
> ø 50	≤ ø 80	+0.012 / -0.007	j6
> ø 80	≤ ø 120	+0.013 / -0.009	j6
> ø 120	≤ ø 180	+0.014 / -0.011	j6
> ø 180	≤ ø 230	+0.016 / -0.013	j6
> ø 230	≤ ø 250	+0.000 / -0.029	h6
> ø 250	≤ ø 315	+0.000 / -0.032	h6
> ø 315	≤ ø 400	+0.000 / -0.036	h6
> ø 400	≤ ø 500	+0.000 / -0.040	h6

❶ **Metric Pilot Tolerances per ISO286-2**

Casting Surfaces may differ slightly (approximately 0.125 inches or 3.2mm) from the specified nominal dimensions as a result of the manufacturing process

Send Quote Requests to info@automatedpt.com
Call +1(800)985-6929 To Order or Order Online At Nordgearmotors.com

Send Quote Requests to info@automatedpt.com
Call +1(800)985-6929 To Order or Order Online At Nordgearmotors.com



Engineering Conversions & Formulas

Metric ⇒ Inch

Multiply	By	To Obtain
Gram [g]	x 0.0353	= oz
Kilogram [kg]	x 2.205	= lb
Newton [N]	x 0.2248	= lb
Newton meter [Nm]	x 8.851	= lb-in
Newton meter [Nm]	x 0.7375	= lb-ft
Inertia [kgm^2]	x 23.75	= lb-ft^2
Kilowatt [kW]	x 1.341	= hp
Meter [m]	x 39.4	= in
Meter [m]	x 3.281	= ft
Meter [m]	x 1.094	= yd
Millimeter [mm]	x 0.0391	= in
Centimeter [cm]	x 0.394	= in
Cubic Centimeter [cm^3]	x 0.061	= in^3
Liter [l]	x 61.023	= in^3
Liter [l]	x 1.057	= qt
Liter [l]	x 0.2642	= gal

Inch ⇒ Metric

Multiply	By	To Obtain
Ounce [oz]	x 28.35	= g
Pound [lb]	x 0.454	= kg
Ounce [oz]	x 0.028	= kg
Pound [lb]	x 4.448	= N
Pound-Inch [lb-in]	x 0.113	= Nm
Pound Feet [lb-ft]	x 1.3558	= Nm
Pound Feet Squared [lb-ft^2]	x 0.0421	= kgm^2
Horsepower [hp]	x 0.746	= kW
Feet [ft]	x 0.3048	= kW
Yard [yd]	x 0.9144	= m
Inch [in]	x 25.4	= mm
Inch [in]	x 2.54	= cm
Inch [in]	x 0.0254	= m
Cubic Inch [in^3]	x 16.39	= cm^3
Cubic Inch [in^3]	x 0.016	= liters
Gallon [gal]	x 3.785	= liters

Temperature

°F = 1.8 °C + 32
°C = 0.5555 x (°F - 32)
°C = °K - 273.16

Linear Velocity

Miles per Hour [mph]	x 88	= ft/min [fpm]
Miles per Hour [mph]	x 1.4677	= ft/sec [fps]
Feet per Minute [fpm]	x 0.3048	= m/min
Feet per Minute [fpm]	x 0.00508	= m/sec
Meter per Minute [m/min]	x 3.2808	= ft/min [fpm]
Meter per Second [m/sec]	x 196.85	= ft/min [fpm]

Power

$$hp = \frac{\text{Torque (lb-in) x rpm}}{63025}$$

$$hp = \frac{\text{Torque (lb-ft) x rpm}}{5252}$$

$$hp_{(Lift)} = \frac{\text{Wgt (lb) x fpm}}{33000 \times \text{Efficiency}}$$

$$hp_{(Slide)} = \frac{\text{Wgt (lb) x } \mu \text{ x fpm}}{33000 \times \text{Efficiency}}$$

Torque

$$T_{(lb\text{-}in)} = \frac{hp \times 63025}{rpm}$$

$$T_{(lb\text{-}ft)} = \frac{hp \times 5252}{rpm}$$

Linear & Rotational Speed

$$fpm = 0.2618 \times Dia_{(in)} \times rpm$$

$$rpm = \frac{fpm \times 3.820}{Dia_{(in)}}$$

Electric Motor 3-phase

$$hp_{(3ph\text{-}motor)} = \frac{1.732 \times V \times I \times PF \times Efficiency}{746}$$

Metric M Threads

For metric "M" threads, it is customary to omit the thread pitch for coarse threads. For example, if a thread is called out as an M8 with no pitch shown, it is automatically a coarse pitch thread.

Coarse threads and pitch
M6 x 1
M8 x 1.25
M10 x 1.5
M12 x 1.75
M16 x 2
M20 x 2.5
M24 x 3

Send Quote Requests to info@automatedpt.com
Call +1(800)985-6929 To Order or Order Online At Nordgearmotors.com

Engineering NORD Service Factor



Mass Acceleration Service Factor

The mass acceleration factor (m_{af}) uses a ratio of the load inertia to motor inertia. This method of service factor calculation can be used for both gearmotors and speed reducers and is valid for helical and helical-bevel gear units. For helical-worm units additional factors will need to be taken into account including an ambient temperature factor and duty cycle factor.

Short-term and infrequent torque impulses significantly influence the load and selection of a gear unit. The gear unit service factor, f_B, takes this and other affects on the gear unit into account.

The mass acceleration factor, m_{af}, represents the relationship between external low-speed output side and high-speed input side masses. The mass acceleration factor significantly influences the level of torque impulses in the gear unit upon start-up and braking procedures, and upon vibration. The external mass moments of inertia also include the load, such as the material transported on conveyor belts. We ask you to consult with NORD if the $m_{af} > 10$, if there is a large play in transfer elements, vibration in the system, uncertainty regarding the load classification, or you are in doubt.

For applications with relatively high external mass moments of inertia, $m_{af} > 2$ (i.e. travel drives, slewing gears, rotary tables, gear drives, agitators, and surface aerators), we recommend breaking torque that does not exceed 1.2 times the rated motor torque. If a higher breaking torque is to be used, this must be considered when selecting the gear unit.

1. Calculate mass acceleration factor:

$$m_{af} = \frac{J_{load}}{J_{motor}} \times \left(\frac{1}{\text{reducer ratio}} \right)^2$$

J_{load} = External load inertia including all components of the system outside of the reducer

J_{motor} = Motor inertia.
For NORD motors see pages 712 - 718

If $m_{af} \leq 0.25$ use curve A (uniform operation)
Light conveyor screws, fans, assembly lines, light conveyor belts, small agitators, elevators, cleaning machines, filling machines, inspection machines, belt conveyors.

If ≤ 0.25 $m_{af} \leq 3.00$ use curve B (moderate shocks)
Coilers, feed-mechanism drivers for woodworking machines, dumbwaiters, balancing machines, thread cutting machines, medium-sized agitators and mixers, heavy conveyor belts, winches, sliding doors, manure scrapers, packing machines, concrete mixers, overhead crane traveling mechanisms, mills, bending machines, gear pumps.

If $3.01 \leq m_{af}$ 10.00 use curve C (heavy shocks)
Heavy mixers, shears, presses, centrifuges, rolling stands, heavy winches and lifts, grinding mills, stone crushers, bucket elevators, punching machines, hammer mills, eccentric presses, folding machines, roller tables, tumbling barrels, vibrators, shredders.

2. Determine the cycles/hour. A cycle is a start or hard stop, where a hard stop decelerates the motion of the system when a mechanical brake is activated.

3. Determine the run time in hours/day.

4. Using the chart; locate the cycles/hour on the horizontal axis and move vertically up to intersect curve A, B, or C based on the m_{af}. From the intersection point, move horizontally left to the service factor f_B based on the run time in hours/day.

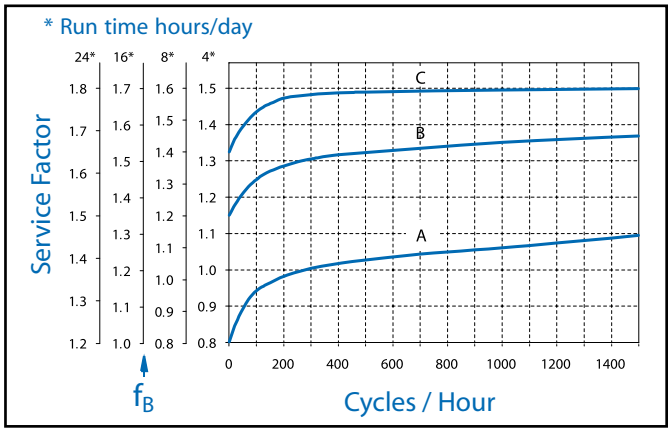

EXAMPLE for Inline, Shaft mount, or Bevel gearmotor:

A smooth running conveyor operates 24 hours/day with 500 cycles/hour. The calculated $m_{af} = 0.16$, therefore use curve A for this type of application.

From the chart, find 500 cycles/hour and follow the axis vertically up until you intersect curve A. From the intersection point, move horizontally left to find the service factor $f_B = 1.4$ based on 24 hours/day operation. Consult the selection pages of the catalog to find a gearmotor with a service factor $f_B = 1.4$ or greater.

Send Quote Requests to info@automatedpt.com
Call +1(800)985-6929 To Order or Order Online At Nordgearmotors.com

Send Quote Requests to info@automatedpt.com Call +1(800)985-6929 To Order or Order Online At Nordgearmotors.com

EXAMPLE for Helical-worm gearmotor:

A coiler operates 16 hours/day with 300 cycles/hour with a calculated m_{af} = 2.5. Ambient temperature is 120°F and the unit operates 18 minutes per hour.

From the chart, find 300 cycles/hour and follow the axis vertically up until you intersect curve B. From the intersection point, move horizontally left to find the service factor f_B = 1.5 based on 16 hours/day operation.

The service factor f_B for helical-worms must be modified for the ambient temperature factor f_{B1} and duty cycle factor f_{B2}.

The combined service factor
$f_{Bcombined} = f_B \times f_{B1} \times f_{B2}$

To find the ambient temperature factor f_{B1} use the following chart based on ambient temperature.

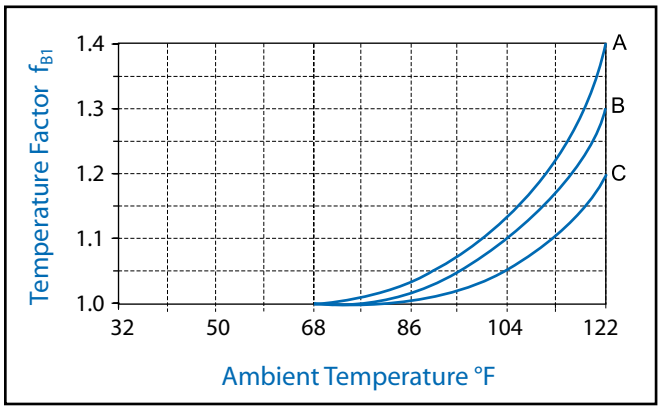

To find the duty cycle factor f_{B2} use the following chart based on how many minutes per hour the unit is running.

In this example,
$f_{Bcombined} = (f_B = 1.50) \times (f_{B1} = 1.30) \times (f_{B2} = 0.90) = 1.76$

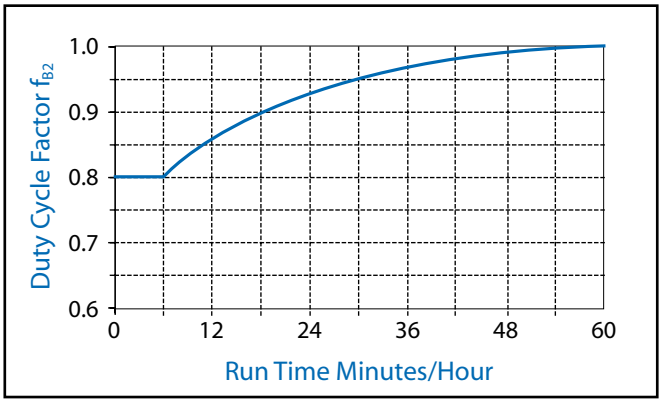

When selecting worm gear reducers, multi-thread (multi-start) worms must be used where shock loading exists and where the driven machine may backdrive the gearbox for short periods. Multi-thread worms have z_1 (number of threads) greater than or equal to 2.

$m_{af} \leq 0.25$ all numbers of worm threads (z_1) are possible
$m_{af} \leq 3.00$ $z_1 \geq 3$ is recommend
$m_{af} \leq 10.00$ $z_1 \geq 6$ is recommend

Refer to the worm reducer selection pages in this catalog (pages and find the any ratio with $z_1 \geq 3$. Then refer to the gearmotor selection pages and choose a gearmotor with a service factor of 1.76 or greater.

Send Quote Requests to info@automatedpt.com
Call +1(800)985-6929 To Order or Order Online At Nordgearmotors.com

Send Quote Requests to info@automatedpt.com Call +1(800)985-6929 To Order or Order Online At Nordgearmotors.com

Engineering AGMA Service Classes



AGMA Selection Method

Gearmotors

Before a gearmotor is selected, an application class number must be determined. Since application classification represents the normal relationship between gear design power rating and the maximum potential transmitted power, it is suggested that the application class number be applied to the nameplate rating of the electric motor. The application class numbers are I, II, and III.

Their relationship to service factor is:

Class Numbers	f_B
I	1.0 - 1.39
II	1.4 - 1.99
III	≥ 2.0

Application class numbers may be selected from the table. Some operational characteristics that affect an application's classification are:

- **Starting conditions:** Starting conditions where peak loads exceed 200 percent of rated load, applications with frequent starts and stops and reversing applications require special analysis. Rated load is defined as the unit rating with an application class number of I (1.0 - 1.39 service factor).
- **Overloads:** Loads in excess of the rated load are con-sidered overloads. Overload can be of momentary duration, periodic, quasi-steady state, or vibratory in nature. The magnitude and the number of stress cycles require special analysis to prevent low cycle fatigue or yield stress failure. Applications with high torque motors, motors for intermittent operation and applications where extreme repetitive shock occurs or where high-energy loads must be absorbed as when stalling require special consideration.
- **Brake equipped applications:** When a gear drive is equipped with a brake that is used to decelerate the motion of the system, select the drive based on the brake rating or the equivalent power, which ever is greater. If the brake is located on the output shaft of the gear drive, special analysis is required.
- **Reliability and life requirement:** Applications requiring a high degree of reliability or unusually long life should be given careful consideration by the user and NORD GEAR before assigning an application class number. High reliability and life should be addressed by using an increased safety factor agreed to between NORD and the purchaser.

Synchronous motors, certain types of high torque induction motors and generator drives require special analysis. Synchronous motors have high transient torque during starting and restarting after they trip out momentarily.

Induction motors of special high slip design can produce extremely high starting torque. High torque loads are produced when the motor trips out for a very short time and then the trip re-closes.

Generators have extremely high loads when they are out of phase with the main system and when there are across the line short circuits.

Adjustments to the gear drive selection may be necessary when one or more of the following conditions exist:

- Ambient conditions. Extremes of temperature and environment.
- Lubrication. Any lubricant not in accordance with NORD's recommendations.
- Misalignment and distortions due to inadequate foundations.
- Reversing applications.
- High-risk applications involving human safety.

The purpose of this table is to provide a guide in the selection and application of gear drives designed and rated in accordance with AGMA Standard 6009.

The service factor table has been developed from the experience of manufacturers and users of gear drives for use in common applications and has been found to be generally satisfactory for the listed industries when gears are applied using AGMA standards. It is recommended that the user and NORD Gear agree upon class numbers for special applications when variations of the table may be required.

Send Quote Requests to info@automatedpt.com
Call +1(800)985-6929 To Order or Order Online At Nordgearmotors.com

Send Quote Requests to info@automatedpt.com
Call +1(800)985-6929 To Order or Order Online At Nordgearmotors.com

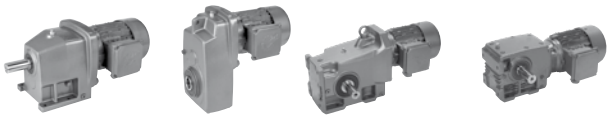

Engineering AGMA Service Classes

Application	Load Duration		
	Up to 3 hrs per day	3-10 hrs per day	Over 10 hrs per day
AGITATORS (mixers)			
Pure Liquids	I	I	II
Liquids and Solids	I	II	II
Liquids – Variable Density	I	II	II
BLOWERS			
Centrifugal	I	I	II
Lobe	I	II	II
Vane	I	II	II
BREWING AND DISTILLING			
Bottling Machinery	I	I	II
Brew Kettles – Continuous Duty	II	II	II
Cookers – Continuous Duty	II	II	II
Mash Tubs – Continuous Duty	II	II	II
Scale Hopper – Frequent Starts	II	II	II
CAN FILLING MACHINES	I	I	II
CAR DUMPERS	II	III	III
CAR PULLERS	I	II	II
CLARIFIERS	I	I	II
CLASSIFIERS	I	II	II
CLAY WORKING MACHINERY			
Brick Press	II	III	III
Briquette Machine	II	III	III
Pug Mill	I	II	II
COMPACTORS	III	III	III
COMPRESSORS			
Centrifugal	I	I	II
Lobe	I	II	II
Reciprocating, Multi-Cylinder	II	II	III
Reciprocating, Single-Cylinder	III	III	III
CONVEYORS – GENERAL PURPOSE			
Includes Apron, Assemble, Belt, Bucket, Chain, Flight, Oven & Screw Uniformly loaded or Fed	I	I	II
Heavy Duty – Not Uniformly Fed	I	II	II
Severe Duty – Reciprocating or Shaker	II	III	III
CRANES			
Main Hoist			
Medium Duty	II	II	II
Heavy Duty	III	III	III
Reversing	II	II	II
Skip Hoist	II	II	II
Trolley Drive	II	II	II
Bridge Drive	II	II	II
CRUSHER			
Stone or Ore	III	III	III
DREDGES			
Cable Reels	II	II	II
Conveyors	II	II	II
Cutter Head Dives	III	III	III
Pumps	III	III	III
Screen Drives	III	III	III
Stackers	II	II	II
Winches	II	II	II

Application	Load Duration		
	Up to 3 hrs per day	3-10 hrs per day	Over 10 hrs per day
ELEVATORS			
Bucket	I	II	II
Centrifugal Discharge	I	I	II
Escalators	I	I	II
Freight	I	II	II
Gravity Discharge	I	I	II
EXTRUDERS			
General	II	II	II
Plastics			
Variable Speed Drive	III	III	III
Fixed Speed Drive	III	III	III
Rubber			
Continuous Screw Operation	III	III	III
Intermittent Screw Operation	III	III	III
FANS			
Centrifugal	I	I	II
Cooling Towers	III	III	III
Forced Draft	II	II	II
Induced Draft	II	II	II
Industrial & Mine	II	II	II
FEEDERS			
Apron	I	II	II
Belt	I	II	II
Disc	I	I	II
Reciprocating	II	III	III
Screw	I	II	II
FOOD INDUSTRY			
Cereal Cooker	I	I	II
Dough Mixer	II	II	II
Meat Grinders	II	II	II
Slicers	I	II	II
GENERATORS AND EXCITERS	II	II	II
HAMMER MILLS	III	III	III
HOISTS			
Heavy Duty	III	III	III
Medium Duty	II	II	II
Skip Hoist	II	II	II
LAUNDRY TUMBLERS	II	II	II
LAUNDRY WASHERS	II	II	III

Send Quote Requests to info@automatedpt.com
Call +1(800)985-6929 To Order or Order Online At Nordgearmotors.com

Engineering AGMA Service Classes

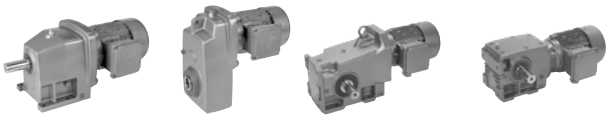

DRIVESYSTEMS

Application	Load Duration		
	Up to 3 hrs per day	3-10 hrs per day	Over 10 hrs per day
LUMBER INDUSTRY			
Barkers			
Spindle Feed	II	II	II
Main Drive	III	III	III
Conveyors			
Burner	II	II	II
Main or Heavy Duty	II	II	II
Main log	III	III	III
Re-saw, Merry-Go-Round	II	II	II
Slab	III	III	III
Transfer	II	II	II
Chains			
Floor	II	II	II
Green	II	II	III
Cut-Off Saws			
Chain	II	II	III
Drag	II	II	III
Debarking Drums	III	III	III
Feeds			
Edger	II	II	II
Gang	II	III	III
Trimmer	II	II	II
Long Deck	III	III	III
Log Hauls – Incline – Well Type	III	III	III
Log Turning Devices	III	III	III
Planer Feed	II	II	II
Planer Tilting Hoists	II	II	II
Rolls – live-off brg. – Roll Cases	III	III	III
Sorting Table	II	II	II
Tipple Hoist	II	II	II
Transfers			
Chain	II	II	III
Craneway	II	II	III
Tray Drives	II	II	II
Veneer Lathe Drives	II	II	II
METAL MILLS			
Draw Bench Carriage and Main Drive	II	II	II
Runout Table			
Non-reversing Group Drives	II	II	II
Individual Drives	III	III	III
Reversing	III	III	III
Slab Pushers	II	II	II
Shears	III	III	III
Wire drawing	II	II	II
Wire Winding Machine	II	II	II
METAL STRIP PROCESSING MACHINERY			
Bridles	II	II	II
Coilers & Uncoilers	I	I	II
Edge Trimmers	I	II	II
Flatteners	II	II	II
Loopers (Accumulators)	I	I	I
Pinch Rolls	II	II	I
Scrap Choppers	II	II	II
Shears	III	III	III
Slitters	I	II	II

Application	Load Duration		
	Up to 3 hrs per day	3-10 hrs per day	Over 10 hrs per day
MILLS, ROTARY TYPE			
Ball & Rod			
Spur Ring Gear	III	III	III
Helical Ring Gear	II	II	II
Direct Connected	III	III	III
Cement Kilns	II	II	II
Dryers & Coolers	II	II	II
PAPER MILLS[1]			
Agitator (Mixer)	II	II	II
Agitator for Pure liquors	II	II	II
Barking Drums	III	III	III
Barkers – Mechanical	III	III	III
Beater	II	II	II
Breaker Stack	II	II	II
Calender[2]	II	II	II
Chipper	III	III	III
Chip Feeder	II	II	II
Coating Rolls	II	II	II
Conveyors			
Chip, Bark, Chemical	II	II	II
log (including Slab)	III	III	III
Couch Rolls	II	II	II
Cutter	III	III	III
Cylinder Molds	II	II	II
Dryers[2]			
Paper Machine	II	II	II
Conveyor Type	II	II	II
Embosser	II	II	II
Extruder	II	II	II
Fourdrinier Rolls (Includes lump, Dandy Roll, Wire Turning, and Return Rolls)	II	II	II
Jordan	II	II	II
Kiln Drive	II	II	II
Mt. Hope Roll	II	II	II
Paper Rolls	II	II	II
Platter	II	II	II
Presses – Felt & Suction	II	II	II
Pulper	III	III	III
Pumps – Vacuum	II	II	II
Reel (Surface Type)	II	II	II
Screens			
Chip	II	II	II
Rotary	II	II	II
Vibrating	III	III	III
Size Press	II	II	II
Supercalendar[3]	II	II	II
Thickener (AC Motor)	II	II	II
Thickener (DC Motor)	II	II	II
Washer (AC Motor)	II	II	II
Washer (DC Motor)	II	II	II
Wind and Unwind Stand	I	I	I
Winders (Surface Type)	II	II	II
Yankee Dryers[2]	II	II	II

Send Quote Requests to info@automatedpt.com
Call +1(800)985-6929 To Order or Order Online At Nordgearmotors.com

Send Quote Requests to info@automatedpt.com Call +1(800)985-6929 To Order or Order Online At Nordgearmotors.com

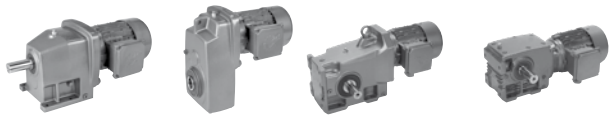

Engineering AGMA Service Classes

Application	Load Duration		
	Up to 3 hrs per day	3-10 hrs per day	Over 10 hrs per day
PLASTICS INDUSTRY – PRIMARY PROCESSING			
Intensive Internal Mixers			
Batch Mixers	III	III	III
Continuous Mixers	II	II	II
Batch Drop Mill – 2 smooth rolls	II	II	II
Continuous Feed, Holding &	II	II	II
Biend Mill Calendars	II	II	II
PLASTICS INDUSTRY – SECONDARY PROCESSING			
Blow Molders	II	II	II
Coating	II	II	II
Film	II	II	II
Pipe	II	II	II
Pre-Plasticizers	II	II	II
Rods	II	II	II
Sheet	II	II	II
Tubing	II	II	II
PULLERS – BARGE HAUL	II	II	II
PUMPS			
Centrifugal	I	I	II
Proportioning	II	II	II
Reciprocating			
Single Acting, 3 or more cylinders	II	II	II
Double Acting, 2 or more cylinders	II	II	II
Rotary			
Gear Type	I	I	II
Lobe	I	I	II
Vane	I	I	II
RUBBER INDUSTRY			
Intensive Internal Mixers			
Batch Mixers	III	III	III
Continuous Mixers	II	II	II
Mixing Mill			
2 smooth rolls	II	II	II
1 or 2 corrugated rolls	III	III	III
Batch Drop Mill – 2 smooth rolls	II	II	II
Cracker Warmer – 2 roll, 1 corrugated roll	III	III	III
Cracker – 2 corrugated rolls	III	III	III
Holding, Feed & Blend Mill – 2 rolls	II	II	II
Refiner – 2 rolls	II	II	II
Calendars	II	II	II
SAND MULLER	II	II	II
SEWAGE DISPOSAL EQUIPMENT			
Bar Screens	II	II	II
Chemical Feeders	II	II	II
Dewatering Screens	II	II	II
Scum Breakers	II	II	II
Slow or Rapid Mixers	II	II	II
Sludge Collectors	II	II	II
Thickener	II	II	II
Vacuum Filters	II	II	II

Application	Load Duration		
	Up to 3 hrs per day	3-10 hrs per day	Over 10 hrs per day
SCREENS			
Air Washing	I	I	II
Rotary – Stone or Gravel	II	II	II
Traveling Water Intake I	I	I	I
SCREW CONVEYORS			
Uniformly loaded or Fed	I	I	II
Heavy Duty	I	II	II
SUGAR INDUSTRY			
Beet Slicer	III	III	III
Cane Knives	II	II	II
Crushers	II	II	II
Mills (low speed end)	III	III	III
TEXTILE INDUSTRY			
Batchers	II	II	II
Calendars	II	II	II
Cards	II	II	II
Dry Cans	II	II	II
Dyeing Machinery	II	II	II
Looms	II	II	II
Mangles	II	II	II
Nappers	II	II	II
Pads	II	II	II
Siashers	II	II	II
Soapers	II	II	II
Spinners	II	II	II
Tenter Frames	II	II	II
Washers	II	II	II
Winders	II	II	II

Notes to GEARMOTOR SERVICE FACTOR table:

1) The class numbers listed for paper mill applications are consistent with those shown in TAPPI (Technical Association of Pulp and Paper Industry) Technical Information Sheet 0406-18 1967, Service Factors for Gears on major Equipment in the Paper and Pulp Industry.

2) Anti-friction bearings only.

3) A Class Number of I may be applied at base speed of a super-calendar operating over a speed range of part-range constant horsepower and part-range constant torque where the constant horsepower speed range is greater than 1.5 to 1. A Class Number of II is applicable to supercalendars operating over the entire speed range at constant torque or where the constant horsepower speed range is less than 1.5 to1.

Send Quote Requests to info@automatedpt.com
Call +1(800)985-6929 To Order or Order Online At Nordgearmotors.com

Engineering AGMA Service Factors



Speed Reducers

Before an enclosed speed reducer or increaser can be selected for any application, an equivalent unit power rating (service factor = 1.0) must be determined. This is done by multiplying the specified power by the service factor. Since the service factor represents the normal relationship between the gear unit rating and the required application power, it is suggested that the service factor be applied to the nameplate rating of the prime mover or driven machine rating, as applicable.

NORD GEAR and the user must agree upon which power, prime mover rating or driven machine requirements, should dictate the selection of the gear drive. It is necessary that the gear drive selected have a rated unit capacity equal to or in excess of this "equivalent unit power rating".

All service factors listed are 1.0 or greater. Service factors less than 1.0 can be used in some applications when specified by the user and agreed to by NORD GEAR.

The REDUCER SERVICE FACTOR table should be used with caution, since much higher values have occurred in some applications. Values as high as ten have been used. On some applications up to six times nominal torque can occur, such as: Turbine/Generator drives, Heavy Plate and Billet rolling mills.

It has been developed from the experience of manufacturers and users of gear drives for use in common applications. It is suggested that service factors for special applications be agreed upon by the user and NORD GEAR when variations of the values in the table may be required.

Service factors shown are for reducers driven by motors (electric or hydraulic) and turbines (steam or gas) according to AGMA 6010. When the driver is a single cylinder or multi-cylinder engine, the service factors from the table must be modified for the appropriate type of prime mover.

As an example, if the application is a centrifugal blower, the service factor from the REDUCER SERVICE FACTOR table is 1.25 for a motor or turbine. The CONVERSION TABLE changes this value to 1.75 for a single cylinder engine and 1.50 for a multi-cylinder engine.

CAUTION: Any user of enclosed gear drives should make sure that the latest available information affecting the selection of a gear drive is used. When better load intensity data is available on the driving or driven equipment, this should be considered when a service factor is selected.

Conversion Table

Electric Motor, Steam & Gas Turbines, Hydraulics	Single-Cylinder Engines	Multi-Cylinder Engines
1.00	1.50	1.25
1.25	1.75	1.50
1.50	2.0	1.75
1.75	2.25	2.00
2.00	2.50	2.25
2.25	2.75	2.50
2.50	3.00	2.75
2.75	3.25	3.00
3.00	3.50	3.25

Application	Load Duration		
	Up to 3 hrs per day	3-10 hrs per day	Over 10 hrs per day
AGITATORS (mixers)			
Pure Liquids	1.00	1.00	1.25
Liquids and Solids	1.00	1.25	1.50
Liquids – Variable Density	1.00	1.25	1.50
BLOWERS			
Centrifugal	1.00	1.25	1.50
Lobe	1.00	1.25	1.50
Vane	1.00	1.00	1.25
BREWING AND DISTILLING			
Bottling Machinery	1.00	1.00	1.25
Brew Kettles – Continuous Duty	1.00	1.00	1.25
Cookers – Continuous Duty	1.00	1.00	1.25
Mash Tubs – Continuous Duty	1.00	1.00	1.25
Scale Hopper – Frequent Starts	1.00	1.25	1.50
CAN FILLING MACHINES	1.00	1.00	1.25
CAR DUMPERS	1.25	1.50	1.75
CAR PULLERS	1.00	1.25	1.50
CLARIFIERS	1.00	1.00	1.25
CLASSIFIERS	1.00	1.25	1.50
CLAY WORKING MACHINERY			
Brick Press	1.25	1.50	1.75
Briquette Machine	1.25	1.50	1.75
Pug Mill	1.00	1.25	1.50
COMPACTORS	1.50	1.75	2.00
COMPRESSORS			
Centrifugal	1.00	1.00	1.25
Lobe	1.00	1.25	1.50
Reciprocating, Multi-Cylinder	1.00	1.25	1.50
Reciprocating, Single-Cylinder	1.25	1.50	1.75
CONVEYORS – GENERAL PURPOSE			
Uniformly loaded or fed	1.00	1.00	1.25
Not uniformly fed	1.00	1.25	1.50
Reciprocating or shaker	1.25	1.50	1.75
CRANES			
Dry dock			
Main hoist	1.25	1.50	1.75
Auxilliary hoist	1.25	1.50	1.75
Boom hoist	1.25	1.50	1.75
Slewing drive	1.25	1.50	1.75
Traction drive	1.50	1.50	1.50
Industrial Duty			
Main hoist	1.00	1.25	1.50
CRUSHER			
Stone or ore	1.50	1.75	2.00

Send Quote Requests to info@automatedpt.com
Call +1(800)985-6929 To Order or Order Online At Nordgearmotors.com

Send Quote Requests to info@automatedpt.com
Call +1(800)985-6929 To Order or Order Online At Nordgearmotors.com

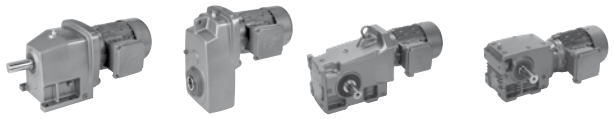

Engineering AGMA Service Factors

Application	Load Duration		
	Up to 3 hrs per day	3-10 hrs per day	Over 10 hrs per day
DREDGES			
Cable reels	1.00	1.25	1.50
Conveyors	1.00	1.25	1.50
Cutter Head Dives	1.25	1.50	1.75
Pumps	1.00	1.25	1.50
Screen Drives	1.25	1.50	1.75
Stackers	1.00	1.25	1.50
Winches	1.00	1.25	1.50
ELEVATORS			
Bucket	1.00	1.25	1.50
Centrifugal Discharge	1.00	1.00	1.25
Gravity Discharge	1.00	1.00	1.25
EXTRUDERS			
General	1.25	1.25	1.25
Plastics			
Variable Speed Drive	1.50	1.50	1.50
Fixed Speed Drive	1.75	1.75	1.75
Rubber			
Continuous Screw Operation	1.50	1.50	1.50
Intermittent Screw Operation	1.75	1.75	1.75
FANS			
Centrifugal	1.00	1.00	1.25
Forced Draft	1.25	1.25	1.25
Induced Draft	1.00	1.25	1.50
Industrial & Mine	1.00	1.25	1.50
FEEDERS			
Apron	1.00	1.25	1.50
Belt	1.00	1.25	1.50
Disc	1.00	1.00	1.25
Reciprocating	1.25	1.50	1.75
Screw	1.00	1.25	1.50
FOOD INDUSTRY			
Cereal Cooker	1.00	1.00	1.25
Dough Mixer	1.00	1.25	1.50
Meat Grinders	1.00	1.25	1.50
Slicers	1.00	1.25	1.50
GENERATORS AND EXCITERS	1.00	1.00	1.25
HAMMER MILLS	1.50	1.50	1.75
HOISTS			
Heavy Duty	1.25	1.50	1.75
Medium Duty	1.00	1.25	1.50
Skip Hoist	1.00	1.25	1.50
LAUNDRY TUMBLERS	1.00	1.25	1.50
LAUNDRY WASHERS	1.25	1.25	1.50

Application	Load Duration		
	Up to 3 hrs per day	3-10 hrs per day	Over 10 hrs per day
LUMBER INDUSTRY			
Barkers	1.25	1.25	1.50
Spindle Feed	1.50	1.50	1.50
Main Drive	1.25	1.25	1.50
Conveyors			
Burner	1.25	1.25	1.50
Main or Heavy Duty	1.50	1.50	1.50
Main log	1.50	1.50	1.75
Re-saw, Merry-Go-Round	1.25	1.25	1.50
Slab	1.50	1.50	1.75
Transfer	1.25	1.25	1.50
Chains			
Floor	1.50	1.50	1.50
Green	1.50	1.50	1.50
Cut-Off Saws			
Chain	1.50	1.50	1.50
Drag	1.50	1.50	1.50
Debarking Drums	1.50	1.50	1.75
Feeds			
Edger	1.25	1.25	1.50
Gang	1.50	1.50	1.50
Trimmer	1.25	1.25	1.50
Long Deck	1.50	1.50	1.50
Log Hauls – Incline – Well Type	1.50	1.50	1.50
Log Turning Devices	1.50	1.50	1.50
Planer Feed	1.25	1.25	1.50
Planer Tilting Hoists	1.50	1.50	1.50
Rolls – live-off brg. – Roll Cases	1.50	1.50	1.50
Sorting Table	1.25	1.50	1.50
Tipple Hoist	1.25	1.25	1.50
Transfers			
Chain	1.50	1.50	1.50
Causeway	1.50	1.50	1.50
Tray Drives	1.25	1.25	1.50
METAL MILLS			
Draw Bench Carriage & Main Drive	1.00	1.25	1.50
Runout Table			
Non-reversing			
Group Drives	1.00	1.25	1.50
Individual Drives	1.50	1.50	1.75
Reversing	1.50	1.50	1.75
Slab Pushers	1.25	1.25	1.50
Shears	1.50	1.50	1.75
Wire drawing	1.00	1.25	1.50
Wire Winding Machine	1.00	1.25	1.50

Send Quote Requests to info@automatedpt.com
Call +1(800)985-6929 To Order or Order Online At Nordgearmotors.com

Engineering AGMA Service Factors

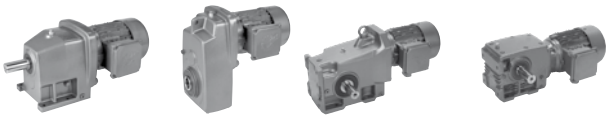

DRIVESYSTEMS

Application	Load Duration		
	Up to 3 hrs per day	3-10 hrs per day	Over 10 hrs per day
METAL STRIP PROCESSING MACHINERY			
Bridles	1.25	1.25	1.50
Coilers and uncoilers	1.00	1.00	1.25
Edge Trimmers	1.00	1.25	1.50
Flatteners	1.00	1.25	1.50
Loopers (accumulators)	1.00	1.00	1.00
Pinch rolls	1.00	1.25	1.50
Scrap choppers	1.00	1.25	1.50
Shears	1.50	1.50	1.75
Slitters	1.00	1.25	1.50
MILLS, ROTARY TYPE			
Ball & Rod			
Spur Ring Gear	1.50	1.50	1.75
Helical Ring Gear	1.50	1.50	1.50
Direct Connected	1.50	1.50	1.75
Cement Kilns	1.50	1.50	1.50
Dryers & Coolers	1.50	1.50	1.50
MIXERS CONCRETE	1.00	1.25	1.50
PAPER MILLS[1]			
Agitator (Mixer)	1.50	1.50	1.50
Agitator for Pure liquors	1.25	1.25	1.25
Barking Drums	1.75	1.75	1.75
Barkers – Mechanical	1.75	1.75	1.75
Beater	1.50	1.50	1.50
Breaker Stack	1.25	1.25	1.25
Calender[2]	1.25	1.25	1.25
Chipper	1.75	1.75	1.75
Chip Feeder	1.50	1.50	1.50
Coating Rolls	1.25	1.25	1.25
Conveyors			
Chip, Bark, Chemical	1.25	1.25	1.25
log (including Slab)	1.75	1.75	1.75
Couch Rolls	1.25	1.25	1.25
Cutter	1.75	1.75	1.75
Cylinder Molds	1.25	1.25	125
Dryers[2]			
Paper Machine	1.25	1.25	1.25
Conveyor Type	1.25	1.25	1.25
Embosser	1.25	1.25	1.25
Extruder	1.50	1.50	1.50
Fourdrinier Rolls (Includes lump Breaker, Dandy Roll, Wire Turning and Return Rolls)	1.25	1.25	1.25
Jordan	1.25	1.25	1.25
Kiln Drive	1.50	1.50	1.50
Mt. Hope Roll	1.25	1.25	1.25
Paper Rolls	1.25	1.25	1.25

Application	Load Duration		
	Up to 3 hrs per day	3-10 hrs per day	Over 10 hrs per day
PAPER MILLS (cont)			
Presses – Felt & Suction	1.25	1.25	1.25
Pulper	1.50	1.50	1.75
Pumps – Vacuum	1.50	1.50	1.50
Reel (Surface Type)	1.25	1.25	1.50
Screens			
Chip	1.50	1.50	1.50
Rotary	1.50	1.50	1.50
Vibrating	1.75	1.75	1.75
Size Press	1.25	1.25	1.25
Supercalendar[3]	1.25	1.25	1.25
Thickener (AC Motor)	1.50	1.50	1.50
Thickener (DC Motor)	1.25	1.25	1.25
Washer (AC Motor)	1.50	1.50	1.50
Washer (DC Motor)	1.25	1.25	1.25
Wind and Unwind Stand	1.00	1.00	1.00
Winders (Surface Type)	1.25	1.25	1.25
Yankee Dryers[2]	1.25	1.25	1.25
PLASTICS INDUSTRY – PRIMARY PROCESSING			
Intensive Internal Mixers			
Batch Mixers	1.75	1.75	1.75
Continuous Mixers	1.50	1.50	1.50
Batch Drop Mill – 2 smooth rolls			
Continuous Feed, Holding & Biend Mill	1.25	1.25	1.25
Calendars	1.50	1.50	1.50
PLASTICS INDUSTRY – SECONDARY PROCESSING			
Blow Molders	1.50	1.50	1.50
Coating	1.25	1.25	1.25
Film	1.25	1.25	1.25
Pipe	1.25	1.25	1.25
Pre-Plasticizers	1.50	1.50	1.50
Rods	1.25	1.25	1.25
Sheet	1.25	1.25	1.25
Tubing	1.25	1.25	1.50
PULLERS – BARGE HAUL	1.00	1.50	1.75
PUMPS			
Centrifugal	1.00	1.00	1.25
Proportioning	1.00	1.25	1.50
Reciprocating			
Single Acting, 3 or more cylinders	1.00	1.25	1.50
Double Acting, 2 or more cylinders	1.00	1.25	1.50
Rotary			
Gear Type	1.00	1.00	1.50
Lobe	1.00	1.00	1.25
Vane	1.00	1.00	1.25

Send Quote Requests to info@automatedpt.com
Call +1(800)985-6929 To Order or Order Online At Nordgearmotors.com

Send Quote Requests to info@automatedpt.com
Call +1(800)985-6929 To Order or Order Online At Nordgearmotors.com



Engineering AGMA Service Factors

Application	Load Duration		
	Up to 3 hrs per day	3-10 hrs per day	Over 10 hrs per day
RUBBER INDUSTRY			
Intensive Internal Mixers			
Batch Mixers	1.50	1.75	1.75
Continuous Mixers	1.25	1.50	1.50
Mixing Mill			
2 smooth rolls	1.50	1.50	1.50
1 or 2 corrugated rolls	1.75	1.75	1.75
Batch Drop Mill – 2 smooth rolls	1.50	1.50	1.50
Cracker Warmer – 2 roll, 1 corrugated roll	1.75	1.75	1.75
Cracker – 2 corrugated rolls	1.75	1.75	1.75
Holding, Feed & Blend Mill – 2 rolls	1.25	1.25	1.25
Refiner – 2 rolls	1.50	1.50	1.50
Calendars	1.50	1.50	1.50
SAND MILLER	1.00	1.25	1.50
SEWAGE DISPOSAI EQUIPMENT			
Bar Screens	1.00	1.00	1.25
Chemical Feeders		1.00	1.25
Dewatering Screens	1.00	1.25	1.50
Scum Breakers	1.00	1.25	1.50
Slow or Rapid Mixers	1.00	1.25	1.50
Sludge Collectors	1.00	1.00	1.25
Thickener	1.00	1.25	1.50
Vacuum Filters	1.00	1.25	1.50
SCREENS			
Air Washing	1.00	1.00	1.25
Rotary – Stone or Gravel	1.00	1.25	1.50
Traveling Water Intake I	1.00	1.00	1.25
SCREW CONVEYORS			
Uniformly loaded or Fed			
Heavy Duty			
SUGAR INDUSTRY			
Beet Slicer	1.50	1.50	1.75
Cane Knives	1.50	1.50	1.50
Crushers	1.50	1.50	1.50
Mills (low speed end)	1.50	1.50	1.50

Application	Load Duration		
	Up to 3 hrs per day	3-10 hrs per day	Over 10 hrs per day
TEXTILE INDUSTRY			
Batchers	1.00	1.25	1.50
Calendars	1.00	1.25	1.50
Cards	1.00	1.25	1.50
Dry Cans	1.00	1.25	1.50
Dyeing Machinery	1.00	1.25	1.50
Looms	1.00	1.25	1.50
Mangles	1.00	1.25	1.50
Nappers	1.00	1.25	1.50
Pads	1.00	1.25	1.50
Siashers	1.00	1.25	1.50
Soapers	1.00	1.25	1.50
Spinners	1.00	1.25	1.50
Tenter Frames	1.00	1.25	1.50
Washers	1.00	1.25	1.50
Winders	1.00	1.25	1.50

Notes to REDUCER SERVICE FACTOR table:

1) Service factors for paper mill applications are applied to the nameplate rating of the electric motor at the motor rated based speed.

2) Anti-friction bearings only. Use 1.5 for sleeve bearings.

3) A service factor of 1.0 may be applied at base speed of a super calender operating over-speed range of part range constant horsepower, part range constant torque where the constant horsepower speed range is greater that 1.5 to 1. A service factor of 1.25 is applicable to super calenders operating over the entire speed range at constant torque or where the constant horsepower speed range is less than 1.5 to 1. Explanatory notes.

Send Quote Requests to info@automatedpt.com
Call +1(800)985-6929 To Order or Order Online At Nordgearmotors.com

Send Quote Requests to info@automatedpt.com Call +1(800)985-6929 To Order or Order Online At Nordgearmotors.com

Engineering Shrink Discs



DRIVESYSTEMS

Shrink Discs (S & VS)

Shrink discs eliminate fretting corrosion and allow for easy shaft mounting and dismounting. Mating shaft tolerances are usually tighter for shrink disc shafts due to the gripping forces needed. The customer shaft diameter has to be machined according to ISO h6 fit tolerances, with a shaft finish of 125 micro inches or smoother.

When designing the customer shaft end which inserts into the shrink disc shaft, it must engage the full length of the hollow shaft (ADH). The tolerance of the shaft is to be machined according to ISO h6. The material used in the customer side shaft end must have a yield strength of at least 52,260 psi (360 N/mm²) so that the compression to create the friction engagement can be established and that no deformation occurs.

Contact NORD when using a shrink disc in an application where the shrink disc connection must simultaneously transmit torque and thrust.

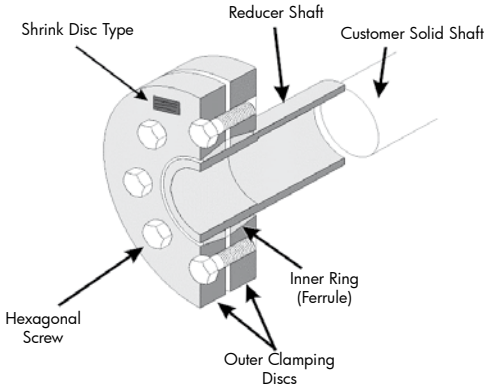

Clincher™ gear units

Gear unit type		Shrink disc			Class 10.9 Hexagonal screw		
		Type	T_{2max} [lb-in]	Safety Factor [h6]	Size	Qty	Torque [lb-in]
SK 0282NB	AZSH	SN 30/40 V	1460	5.9	M6 x 35	8	106.2
SK 1382NB	AZSH	SN 35/46 V	3275	3.8	M6 x 35	10	106.2
SK 1282	AZSH	SN 30/40 V	2620	3.3	M6 x 35	8	106.2
SK 2282	AZSH	SN 35/46 V	4983	2.6	M6 x 35	10	106.2
SK 3282	AZSH	SN 40/55 V	9195	2.3	M8 x 40	8	265.5
SK 4282	AZSH	SN 50/62 V	17700	2.2	M8 x 40	10	265.5
SK 5282	AZSH	SN 60/76 V	28630	2.5	M10 x 50	10	522.2
SK 6282	AZSH	SN 70/90 V	53100	2.3	M12 x 70	10	885.0
SK 7282	AZSH	SN 80/108 V	73455	2.5	M12 x 70	14	885.0
SK 8282	AZSH	SN 100/128 V	116820	2.3	M16 x 80	8	2212.5
SK 9282	AZSH	SN 125/158 V	224790	2.3	M16 x 80	12	2212.5
SK 10282	AZSH	SN 160/210 V	329220	3.6	M20 x 100	14	4336.5
SK 11282	AZSH	SN 180/230 V	610650	1.9	M20 x 100	12	4336.5
SK 12382	AZSH	SN 180/230 V	796500	4.5	M30 x 200	16	15045.0

Heavy Duty Shrink Disc

Gear unit type		Heavy Duty Shrink disc			Class 10.9 Hexagonal screw		
		Type	T_{2max} [lb-in]	Safety Factor [h6]	Size	Qty	Torque [lb-in]
SK 7282	AZVSH	SN 85/108 VS	73455	3.90	M16 x 90	10	2212.5
SK 8282	AZVSH	SN 100/128 VS	116820	3.57	M20 x 100	8	4336.5
SK 9282	AZVSH	SN 130/158 VS	224790	3.89	M20 x 130	12	4336.5
SK 11282	AZVSH	SN 180/230 VS	610650	3.69	M24 x 150	16	7434.0

The data listed also applies to Clincher gear units with a higher number of stages.

Send Quote Requests to info@automatedpt.com
Call +1(800)985-6929 To Order or Order Online At Nordgearmotors.com

Send Quote Requests to info@automatedpt.com Call +1(800)985-6929 To Order or Order Online At Nordgearmotors.com



Helical-bevel gear units

Gear unit type		Shrink disc			Class 10.9 Hexagonal screw		
		Type	T_{2max} [lb-in]	Safety Factor [h6]	Size	Qty	Torque [lb-in]
SK 92072	AZSH	SN 25/34 V	797	4.19	M5 x 25	6	62.0
SK 92172	AZSH	SN 25/35 V	1062	4.23	M5 x 25	8	62.0
SK 92372	AZSH	SN 30/40 V	2036	4.26	M6 x 35	8	106.2
SK 92672	AZSH	SN 35/46 V	3363	3.77	M6 x 35	10	106.2
SK 92772	AZSH	SN 40/55 V	5841	3.53	M8 x 40	8	265.5
SK 9012.1	AZSH	SN 35/46 V	3540	3.58	M6 x 35	10	106.2
SK 9016.1	AZSH	SN 40/46 V	5399	3.40	M6 x 35	10	106.2
SK 9022.1	AZSH	SN 40/55 V	7611	2.71	M8 x 40	8	265.5
SK 9032.1	AZSH	SN 50/62 V	13718	2.83	M8 x 40	10	265.5
SK 9042.1	AZSH	SN 60/76 V	24780	2.90	M10 x 50	10	522.2
SK 9052.1	AZSH	SN 70/90 V	42480	2.87	M12 x 70	10	885.0
SK 9072.1	AZSH	SN 95/108 V	75225	3.70	M12 x 70	14	885.0
SK 9082.1	AZSH	SN 110/138 V	115050	2.66	M16 x 70	8	2212.5
SK 9086.1	AZSH	SN 125/158 V	177000	2.91	M16 x 80	12	2212.5
SK 9092.1	AZSH	SN 150/185 V	283200	2.66	M16 x 80	14	2212.5

Heavy Duty Shrink Disc

Gear unit type		Heavy Duty Shrink disc			Class 10.9 Hexagonal screw		
		Type	T_{2max} [lb-in]	Safety Factor [h6]	Size	Qty	Torque [lb-in]
SK 9072.1	AZVSH	SN 95/108 VS	75225	4.95	M16 x 90	10	2212.5
SK 9082.1	AZVSH	SN 110/138 VS	115050	6.26	M20 x 130	12	4336.5
SK 9086.1	AZVSH	SN 130/158 VS	177000	4.95	M20 x 130	12	4336.5
SK 9092.1	AZVSH	SN 150/195 VS	283200	3.93	M20 x 100	14	7434.0

Helical-worm gear units

Gear unit type		Shrink disc			Class 10.9 Hexagonal screw		
		Type	T_{2max} [lb-in]	Safety Factor [h6]	Size	Qty	Torque [lb-in]
SK 02050	AZSH	SN 25/35 V	1611	2.8	M5 x 25	8	106.2
SK 02050	AZSH	SN 30/40 V	1611	5.4	M6 x 35	8	106.2
SK 12063	AZSH	SN 30/40 V	3390	2.6	M6 x 35	8	106.2
SK 12063	AZSH	SN 35/46 V	3390	3.0	M6 x 35	10	106.2
SK 12080	AZSH	SN 40/55 V	6894	3.0	M8 x 40	8	265.5
SK 12080	AZSH	SN 45/55 V	6894	4.1	M8 x 40	8	265.5
SK 32100	AZSH	SN 50/62 V	14195	2.7	M8 x 40	10	265.5
SK 32100	AZSH	SN 60/76 V	14195	5.1	M10 x 50	10	522.2
SK 42125	AZSH	SN 60/76 V	27612	2.6	M10 x 50	10	522.2
SK 42125	AZSH	SN 70/90 V	27612	4.4	M12 x 70	10	885.0

The data listed also applies to helical-bevel and helical-worm gear units with a higher number of stages.

Send Quote Requests to info@automatedpt.com
Call +1(800)985-6929 To Order or Order Online At Nordgearmotors.com

Shrink Discs Compatibility



DRIVESYSTEMS

Shrink Discs

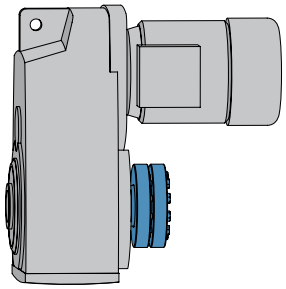

Available Clincher™ gear unit motors with shrink discs

Gear Unit	Motor														
	63 S/L	71 S/L	80 S/L	90 S/L	100 L 100 LA	112 M	132 SM	160 M/L	180 MX/LX	200 L	225 S/M	250 M	280 S/M	315 S/M	315 MA/L
SK 0182 NB AZSH															
SK 0282 NB AZSH	✓														
SK 1282 AZSH	✓	✓	✓												
SK 1382 NB AZSH	✓														
SK 2282 AZSH		✓	✓	✓	✓										
SK 2382 AZSH															
SK 3282 AZSH		✓	✓	✓	✓										
SK 3382 AZSH			✓	✓											
SK 4282 AZSH				✓	✓	✓	✓								
SK 4382 AZSH															
SK 5282 AZSH				✓	✓	✓	✓	✓							
SK 5382 AZSH															
SK 6282 AZSH					✓	✓	✓	✓	✓						
SK 6382 AZSH				✓	✓	✓	✓	✓	✓						
SK 7282 AZSH							✓	✓	✓	✓	*				
SK 7382 AZSH					✓	✓	✓	✓	✓	✓	*				
SK 8282 AZSH							✓	✓	✓	✓	✓				
SK 8382 AZSH					✓	✓	✓	✓	✓	✓	✓				
SK 9282 AZSH										✓	✓	✓	✓		
SK 9382 AZSH							✓	✓	✓	✓	✓	✓	✓		
SK 10282 AZSH													✓	✓	✓
SK 10382 AZSH								✓	✓	✓	✓	✓	✓	✓	✓
SK 11282 AZSH													✓	✓	✓
SK 11382 AZSH								✓	✓	✓	✓	✓	✓	✓	✓
SK 12382 AZSH										✓	✓	✓	✓	✓	✓

*** Upon Request**

Heavy Duty Shrink Disc

SK 7282 AZVSH							✓	✓	✓						
SK 7382 AZVSH					✓	✓	✓	✓	✓						
SK 8282 AZVSH							✓	✓	✓	✓	*				
SK 8382 AZVSH					✓	✓	✓	✓	✓	✓	*				
SK 9282 AZVSH										✓	✓	✓	✓		
SK 9382 AZVSH							✓	✓	✓	✓	✓	✓	✓		
SK 11282 AZVSH													✓	✓	✓
SK 11382 AZVSH								✓	✓	✓	✓	✓	✓	✓	✓

*** Upon Request**

Send Quote Requests to info@automatedpt.com
Call +1(800)985-6929 To Order or Order Online At Nordgearmotors.com

Send Quote Requests to info@automatedpt.com
Call +1(800)985-6929 To Order or Order Online At Nordgearmotors.com

Clincher Unit Shrink Discs (AS & AVS)

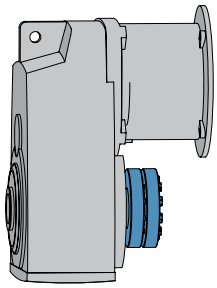

Available Clincher™ gear unit with shrink discs and NEMA adapters

Gear Unit	Motor							
	56C	140TC	180TC	210TC	250TC	280TC	320TC	360TC
SK 0182 NB AZSH								
SK 0282 NB AZSH	✓	✓						
SK 1282 AZSH	✓	✓						
SK 1382 NB AZSH	✓	✓						
SK 2282 AZSH	✓	✓						
SK 2382 AZSH								
SK 3282 AZSH	✓	✓	✓	✓				
SK 3382 AZSH	✓	✓						
SK 4282 AZSH	✓	✓	✓	✓	✓			
SK 4382 AZSH								
SK 5282 AZSH	✓	✓	✓	✓	✓	✓		
SK 5382 AZSH								
SK 6282 AZSH			✓	✓	✓	✓	✓	✓
SK 6382 AZSH	✓	✓	✓	✓	✓	✓		
SK 7282 AZSH			✓	✓	✓	✓	✓	✓
SK 7382 AZSH			✓	✓	✓	✓	✓	✓
SK 8282 AZSH			✓	✓	✓	✓	✓	
SK 8382 AZSH			✓	✓	✓	✓	✓	✓
SK 9282 AZSH			✓	✓	✓	✓	✓	✓
SK 9382 AZSH			✓	✓	✓	✓	✓	✓
SK 10282 AZSH								✓
SK 10382 AZSH			✓	✓	✓	✓	✓	✓
SK 11282 AZSH								✓
SK 11382 AZSH			✓	✓	✓	✓	✓	✓
SK 12382 AZSH					✓	✓	✓	✓

Heavy Duty Shrink Disc

SK 7282 AZVSH			✓	✓	✓	✓	✓	✓
SK 7382 AZVSH			✓	✓	✓	✓	✓	✓
SK 8282 AZVSH			✓	✓	✓	✓	✓	✓
SK 8382 AZVSH			✓	✓	✓	✓	✓	✓
SK 9282 AZVSH			✓	✓	✓	✓	✓	✓
SK 9382 AZVSH			✓	✓	✓	✓	✓	✓
SK 11282 AZVSH								✓
SK 11382 AZVSH			✓	✓	✓	✓	✓	✓

Send Quote Requests to info@automatedpt.com
Call +1(800)985-6929 To Order or Order Online At Nordgearmotors.com

Helical In-line Weights - Gearmotor

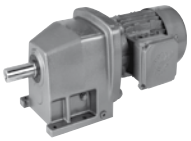

lb

NORD DRIVESYSTEMS

Approximate Weights [lb]

Type	63S	63 L	71 S	71 L	80 S	80 L	90 S	90 L	100 L	100 LA	132 S	132 M	160 M	160 L	180 MX	180 LX	200 L	225 S	225 M	250 M	280 S	280 M	315 S	315 M	315 MA
SK 02	26	27	30	32	35	37	44	49	–	–	–	–	–	–	–	–	–	–	–	–	–	–	–	–	–
SK 03	34	36	38	–	–	–	–	–	–	–	–	–	–	–	–	–	–	–	–	–	–	–	–	–	–
SK 11	21	22	25	27	31	33	40	44	53	60	–	–	–	–	–	–	–	–	–	–	–	–	–	–	–
SK 12	30	31	34	36	40	42	49	53	62	68	–	–	–	–	–	–	–	–	–	–	–	–	–	–	–
SK 13	41	42	45	47	–	–	–	–	–	–	–	–	–	–	–	–	–	–	–	–	–	–	–	–	–
SK 12/02	48	49	52	–	–	–	–	–	–	–	–	–	–	–	–	–	–	–	–	–	–	–	–	–	–
SK 21	–	–	–	–	–	–	–	–	66	73	–	–	–	–	–	–	–	–	–	–	–	–	–	–	–
SK 22	–	–	54	56	60	62	64	73	82	88	–	–	–	–	–	–	–	–	–	–	–	–	–	–	–
SK 23	67	69	71	73	77	79	–	–	–	–	–	–	–	–	–	–	–	–	–	–	–	–	–	–	–
SK 22/02	75	77	–	–	–	–	–	–	–	–	–	–	–	–	–	–	–	–	–	–	–	–	–	–	–
SK 31	–	–	–	–	–	–	–	–	–	84	135	159	–	–	–	–	–	–	–	–	–	–	–	–	–
SK 32	–	–	–	80	84	86	93	97	106	112	163	187	–	–	–	–	–	–	–	–	–	–	–	–	–
SK 33 N	94	95	98	100	104	106	112	–	–	–	–	–	–	–	–	–	–	–	–	–	–	–	–	–	–
SK 32/12	104	105	108	–	114	–	–	–	–	–	–	–	–	–	–	–	–	–	–	–	–	–	–	–	–
SK 41	–	–	–	–	–	–	–	–	–	–	154	179	218	256	–	–	–	–	–	–	–	–	–	–	–
SK 42	–	–	–	–	–	–	126	130	139	146	196	221	260	298	–	–	–	–	–	–	–	–	–	–	–
SK 43	–	–	144	146	150	152	159	163	172	179	–	–	–	–	–	–	–	–	–	–	–	–	–	–	–
SK 42/12	142	144	146	148	–	–	–	–	–	–	–	–	–	–	–	–	–	–	–	–	–	–	–	–	–
SK 51	–	–	–	–	–	–	–	–	–	–	–	–	238	276	329	329	–	–	–	–	–	–	–	–	–
SK 52	–	–	–	–	–	–	190	194	203	209	260	284	324	362	415	415	–	–	–	–	–	–	–	–	–
SK 53	–	–	–	–	223	225	232	236	245	251	–	–	–	–	–	–	–	–	–	–	–	–	–	–	–
SK 52/12	206	208	210	212	–	–	–	–	–	–	–	–	–	–	–	–	–	–	–	–	–	–	–	–	–
SK 62	–	–	–	–	–	–	–	–	–	–	386	410	450	487	540	540	697	770	842	–	–	–	–	–	–
SK 63	–	–	–	–	–	–	311	315	324	331	381	406	445	483	536	536	–	–	–	–	–	–	–	–	–
SK 63/22	–	–	–	340	344	346	353	357	–	–	–	–	–	–	–	–	–	–	–	–	–	–	–	–	–
SK 63/23	–	353	356	358	362	–	–	–	–	–	–	–	–	–	–	–	–	–	–	–	–	–	–	–	–
SK 72	–	–	–	–	–	–	–	–	–	–	–	–	602	639	692	692	849	922	994	–	–	–	–	–	–
SK 73	–	–	–	–	–	–	–	–	503	509	560	584	624	662	714	714	871	944	1017	–	–	–	–	–	–
SK 73/22	–	–	–	–	523	525	531	536	545	–	–	–	–	–	–	–	–	–	–	–	–	–	–	–	–
SK 73/32	–	–	–	519	–	–	–	560	569	576	–	–	–	–	–	–	–	–	–	–	–	–	–	–	–
SK 82	–	–	–	–	–	–	–	–	–	–	–	–	842	880	–	–	1089	1162	1235	1641	2026	–	–	–	–
SK 83	–	–	–	–	–	–	–	–	–	745	796	820	860	897	950	950	1107	1180	1252	–	–	–	–	–	–
SK 83/32	–	–	–	–	783	785	792	796	–	–	–	–	–	–	–	–	–	–	–	–	–	–	–	–	–
SK 83/42	–	–	–	–	–	–	825	829	838	845	895	919	–	–	–	–	–	–	–	–	–	–	–	–	–
SK 92	–	–	–	–	–	–	–	–	–	–	–	–	–	–	–	–	–	–	1623	2029	2414	2525	2900	3076	3407
SK 93	–	–	–	–	–	–	–	–	–	–	1191	1215	1255	1292	1345	1345	1502	1574	1647	2053	2439	–	–	–	–
SK 93/42	–	–	–	–	–	–	1219	1224	1233	1239	1290	1314	1354	–	–	–	–	–	–	–	–	–	–	–	–
SK 93/52	–	–	–	–	–	–	–	–	–	–	–	1378	–	–	–	–	–	–	–	–	–	–	–	–	–
SK 102	–	–	–	–	–	–	–	–	–	–	–	–	–	–	–	–	–	–	–	–	2902	3012	3387	3563	3894
SK 103	–	–	–	–	–	–	–	–	–	–	1674	1698	1738	1775	1828	1828	1985	2057	2130	2536	2922	3032	3407	–	–
SK 103/52	–	–	–	–	–	–	1766	1771	1779	1786	1837	1861	1901	1938	1991	1991	–	–	–	–	–	–	–	–	–

Above weights are approximate. Depending upon ratio, oil quantity and optional equipment, reducer weights may be different than shown.
Exact weights can be obtained after the unit is fully asembled.

Send Quote Requests to info@automatedpt.com
Call +1(800)985-6929 To Order or Order Online At Nordgearmotors.com

Send Quote Requests to info@automatedpt.com
Call +1(800)985-6929 To Order or Order Online At Nordgearmotors.com

Approximate Weights [lb]

Type	W	56C	140TC	180TC	210TC	250TC	280TC	320TC	360TC
SK 02	26	44	44	–	–	–	–	–	–
SK 03	35	–	–	–	–	–	–	–	–
SK 11	35	35	49	–	–	–	–	–	–
SK 12	48	48	57	–	–	–	–	–	–
SK 13	46	–	–	–	–	–	–	–	–
SK 12/02	49	49	–	–	–	–	–	–	–
SK 21	49	46	46	59	–	–	–	–	–
SK 22	64	73	73	77	–	–	–	–	–
SK 23	68	86	86	–	–	–	–	–	–
SK 22/02	77	93	93	–	–	–	–	–	–
SK 31	59	62	62	66	–	–	–	–	–
SK 32	88	90	90	95	–	–	–	–	–
SK 33 N	95	103	103		–	–	–	–	–
SK 32/12	106	115	115	132	–	–	–	–	–
SK 41	101	91	88	92	130	159	–	–	–
SK 42	143	138	132	143	174	201	–	–	–
SK 43	154	152	152	156	–	–	–	–	–
SK 42/12	143	148	148	170	–	–	–	–	–
SK 51	121	105	105	117	147	150	199	–	–
SK 52	207	169	169	174	205	207	285	–	–
SK 53	227	185	185	189	–	–	–	–	–
SK 52/12	207	179	179	234	–	–	–	–	–
SK 62	377	–	–	317	354	392	392	567	567
SK 63	328	295	288	299	330	332	405	–	–
SK 63/22	348	329	329	333	–	–	–	–	–
SK 63/23	353	335	335	–	–	–	–	–	–
SK 72	529			440	477	515	515	721	721
SK 73	551			416	453	491	491	743	743
SK 73/22	527	452	452	456	–	–	–	–	–
SK 73/32	551	553	553	558	571	–	–	–	–
SK 82	880	–	–	666	702	741	741	962	962
SK 83	787	–	–	631	669	706	706	979	979
SK 83/32	787	723	723	728	741	–	–	–	–
SK 83/42	842	837	837	848	879	906	–	–	–
SK 92	1268	–	–	–	–	1215	1215	1350	1350
SK 93	1182	–	–	1184	1184	1239	1239	1374	1374
SK 93/42	1237	1226	1226	1272	1272	1294	–	–	–
SK 93/52	1301	–	–	1276	1306	1308	1308	–	–
SK 102	1821	–	–	–	–	–	1702	1837	1837
SK 103	1775	–	–	1667	1667	1722	1722	1857	1857
SK 103/52	1784	1773	1773	1819	1819	1840	1860	–	–

Above weights are approximate. Depending upon ratio, oil quantity and optional equipment, reducer weights may be different than shown.

Exact weights can be obtained after the unit is fully asembled.

Send Quote Requests to info@automatedpt.com
Call +1(800)985-6929 To Order or Order Online At Nordgearmotors.com

Clincher™ Shaft Mount Weights - Gearmotor



lb

NORD DRIVESYSTEMS

Approximate Weights [lb]

Type	63S	63 L	71 S	71 L	80 S	80 L	90 S	90 L	100 L	100 LA	132 S	132 M	160 M	160 L	180 MX	180 LX	200 L	225 S	225 M	250 M	280 S	280 M	315 S	315 M	315 MA
SK 0182 NB	17	18	21	23	26	29	35	–	–	–	–	–	–	–	–	–	–	–	–	–	–	–	–	–	–
SK 0282 NB	26	27	30	32	35	37	44	49	–	–	–	–	–	–	–	–	–	–	–	–	–	–	–	–	–
SK 1282	39	40	43	45	49	51	57	62	71	77	–	–	–	–	–	–	–	–	–	–	–	–	–	–	–
SK 1382 NB	52	53	56	58	62	64	71	75	84	–	–	–	–	–	–	–	–	–	–	–	–	–	–	–	–
SK 1282/02	56	58	–	–	–	–	–	–	–	–	–	–	–	–	–	–	–	–	–	–	–	–	–	–	–
SK 2282	–	–	67	69	73	75	82	86	95	101	–	–	–	–	–	–	–	–	–	–	–	–	–	–	–
SK 2382	78	80	82	84	88	90	97	–	–	–	–	–	–	–	–	–	–	–	–	–	–	–	–	–	–
SK 2282/02	81	82	–	–	–	–	–	–	–	–	–	–	–	–	–	–	–	–	–	–	–	–	–	–	–
SK 3282	–	–	–	102	106	108	115	119	128	135	185	209	–	–	–	–	–	–	–	–	–	–	–	–	–
SK 3382	114	115	118	120	123	126	–	–	–	–	–	–	–	–	–	–	–	–	–	–	–	–	–	–	–
SK 3282/12	118	120	–	–	–	–	–	–	–	–	–	–	–	–	–	–	–	–	–	–	–	–	–	–	–
SK 4282	–	–	–	–	–	–	148	152	161	168	218	243	282	320	–	–	–	–	–	–	–	–	–	–	–
SK 4382	–	–	166	168	172	174	181	185	–	–	–	–	–	–	–	–	–	–	–	–	–	–	–	–	–
SK 4282/12	151	153	155	157	–	–	–	–	–	–	–	–	–	–	–	–	–	–	–	–	–	–	–	–	–
SK 5282	–	–	–	–	–	–	227	232	240	247	298	322	362	399	–	452	–	–	–	–	–	–	–	–	–
SK 5382	–	–	–	–	260	262	269	273	282	289	–	–	–	–	–	–	–	–	–	–	–	–	–	–	–
SK 5282/12	–	–	235	237	240	–	–	–	–	–	–	–	–	–	–	–	–	–	–	–	–	–	–	–	–
SK 6282	–	–	–	–	–	–	–	–	–	432	483	507	547	584	637	637	–	867	939	–	–	–	–	–	–
SK 6382	–	–	–	–	–	–	406	410	419	426	476	501	540	578	631	631	–	–	–	–	–	–	–	–	–
SK 6382/22	–	–	–	–	439	441	448	452	–	–	–	–	–	–	–	–	–	–	–	–	–	–	–	–	–
SK 7282	–	–	–	–	–	–	–	–	–	–	622	646	686	723	776	776	933	1005	1078	–	–	–	–	–	–
SK 7382	–	–	–	–	–	–	–	–	580	587	637	662	701	739	792	792	948	1021	1094	–	–	–	–	–	–
SK 7382/22	–	–	–	–	600	602	609	613	622	–	–	–	–	–	–	–	–	–	–	–	–	–	–	–	–
SK 8282	–	–	–	–	–	–	–	–	–	–	904	–	968	1005	–	1058	1215	1288	1360	1766	2152	–	–	–	–
SK 8382	–	–	–	–	–	–	–	–	856	862	913	937	977	1014	1067	1067	1224	1297	1369	–	–	–	–	–	–
SK 8382/32	–	–	–	–	900	902	908	913	922	928	–	–	–	–	–	–	–	–	–	–	–	–	–	–	–
SK 8382/42	–	–	–	–	–	–	–	946	955	961	–	–	–	–	–	–	–	–	–	–	–	–	–	–	–
SK 9282	–	–	–	–	–	–	–	–	–	–	–	–	–	–	–	–	–	1951	2024	2430	2816	2926	3301	3477	3808
SK 9382	–	–	–	–	–	–	–	–	–	–	1579	1603	1643	1680	1733	1733	1890	1962	2035	2441	2827	–	–	–	–
SK 9382/42	–	–	–	–	–	–	1607	1612	1621	1627	1678	–	–	–	–	–	–	–	–	–	–	–	–	–	–
SK 9382/52	–	–	–	–	–	–	–	–	–	1691	–	–	1806	–	1896	–	–	–	–	–	–	–	–	–	–
SK 10282	–	–	–	–	–	–	–	–	–	–	–	–	–	–	–	–	–	–	–	–	–	4126	4500	4677	5008
SK 10382	–	–	–	–	–	–	–	–	–	–	–	2847	2886	2924	2977	2977	3133	3206	3279	3685	4070	4181	4556	4732	5063
SK 10382/52	–	–	–	–	–	–	–	–	2928	2935	2986	3010	3050	3087	3140	3140	–	–	–	–	–	–	–	–	–
SK 11282	–	–	–	–	–	–	–	–	–	–	–	–	–	–	–	–	–	–	–	–	–	5859	6234	6410	6741
SK 11382	–	–	–	–	–	–	–	–	–	–	–	–	–	4772	4825	4825	4981	5054	5127	5532	5918	6028	6403	6580	6910
SK 11382/52	–	–	–	–	–	–	–	–	–	4783	4833	4858	4897	4935	4988	4988	–	–	–	–	–	–	–	–	–
SK12382	–	–	–	–	–	–	–	–	–	–	–	–	4734	4772	4825	4825	4981	5054	5127	5532	5918	6028	6403	6580	6910

Above weights are approximate. Depending upon ratio, oil quantity and optional equipment, reducer weights may be different than shown.

Exact weights can be obtained after the unit is fully asembled.

Send Quote Requests to info@automatedpt.com
Call +1(800)985-6929 To Order or Order Online At Nordgearmotors.com



Clincher™ Shaft Mount Weights - Reducer

Approximate Weights [lb]

Type	W	56C	140TC	180TC	210TC	250TC	280TC	320TC	360TC
SK 0182 NB	13	22	22	–	–	–	–	–	–
SK 0282 NB	22	31	31	–	–	–	–	–	–
SK 1282	40	51	51	66	–	–	–	–	–
SK 1382 NB	49	57	57	68	–	–	–	–	–
SK 1282/02	57	68	–	–	–	–	–	–	–
SK 2282	77	82	82	90	–	–	–	–	–
SK 2382	79	90	90	–	–	–	–	–	–
SK 2282/02	82	93	–	–	–	–	–	–	–
SK 3282	110	115	115	124	143	–	–	–	–
SK 3382	115	126	126	–	–	–	–	–	–
SK 3282/12	119	130	130	–	–	–	–	–	–
SK 4282	165	154	154	170	201	223	–	–	–
SK 4382	176	181	181	190	–	–	–	–	–
SK 4282/12	152	163	163	179	–	–	–	–	–
SK 5282	245	234	234	249	280	302	322	–	–
SK 5382	265	269	269	278	278	–	–	–	–
SK 5282/12	231	243	243	258	–	–	–	–	–
SK 6282	474			448	476	531	531	562	562
SK 6382	423	412	412	428	459	481	481	–	–
SK 6382/22	443	448	448	456	–	–	–	–	–
SK 6382/32	467	472	472	481	501	–	–	–	–
SK 7282	613	–	–	587	615	670	670	701	734
SK 7382	628	–	–	602	631	686	686	717	750
SK 7382/22	604	609	609	618	–	–	–	–	–
SK 7382/32	628	633	633	642	662	–	–	–	–
SK 8282	1061	–	–	869	897	953	953	983	1138
SK 8382	904	–	–	878	906	961	961	992	1025
SK 8382/32	904	908	908	917	–	–	–	–	–
SK 8382/42	959	948	948	964	994	–	–	–	–
SK 9282	1724	–	–	–	–	–	1616	1647	1801
SK 9382	1570	–	–	1645	1572	1627	1627	1658	1813
SK 9382/42	1625	1614	1614	1629	1660	–	–	–	–
SK 9382/52	1689	–	–	1693	1724	1746	1766	–	–
SK 10282	2825	–	–	–	–	–	–	–	3001
SK 10382	2880	–	–	–	–	2871	2871	2902	3056
SK 10382/52	2933	2922	2922	2937	2968	2990	2990	–	–
SK 11282	4558	–	–	–	–	–	–	–	4734
SK 11382	4728	–	–	–	–	4719	4719	4750	4904
SK 11382/52	4780	4769	4769	4785	4816	4838	4838	–	–
SK12382	4728	–	–	–	–	4719	4719	4750	4904

Above weights are approximate. Depending upon ratio, oil quantity and optional equipment, reducer weights may be different than shown.

Exact weights can be obtained after the unit is fully asembled.

Send Quote Requests to info@automatedpt.com
Call +1(800)985-6929 To Order or Order Online At Nordgearmotors.com

Helical-Bevel Weights - Gearmotor



lb

NORD DRIVESYSTEMS

Approximate Weights [lb]

Type	63S	63 L	71 S	71 L	80 S	80 L	90 S	90 L	100 L	100 LA	132 S	132 M	160 M	160 L	180 MX	180 LX	200 L	225 S	225 M	250 M	280 S	280 M	315 S	315 M	315 MA
SK 92072	19	20	23	25	29	31	37	42	–	–	–	–	–	–	–	–	–	–	–	–	–	–	–	–	–
SK 92172	30	31	34	36	40	42	49	53	–	–	–	–	–	–	–	–	–	–	–	–	–	–	–	–	–
SK 92372	43	45	47	49	53	55	62	66	75	82	–	–	–	–	–	–	–	–	–	–	–	–	–	–	–
SK 92672	–	81	84	86	89	92	98	103	111	118	169	–	–	–	–	–	–	–	–	–	–	–	–	–	–
SK 9012.1	74	75	78	80	84	86	93	97	106	112	–	–	–	–	–	–	–	–	–	–	–	–	–	–	–
SK 9013.1	85	86	–	–	–	–	–	–	–	–	–	–	–	–	–	–	–	–	–	–	–	–	–	–	–
SK 9016.1	–	78	80	82	86	88	95	99	108	115	–	–	–	–	–	–	–	–	–	–	–	–	–	–	–
SK 9017.1	87	89	91	93	–	–	–	–	–	–	–	–	–	–	–	–	–	–	–	–	–	–	–	–	–
SK 92772	–	–	–	–	105	107	114	118	127	134	184	–	–	–	–	–	–	–	–	–	–	–	–	–	–
SK 9022.1	–	–	96	98	101	104	110	115	123	130	–	–	–	–	–	–	–	–	–	–	–	–	–	–	–
SK 9023.1	103	104	107	109	–	–	–	–	–	–	–	–	–	–	–	–	–	–	–	–	–	–	–	–	–
SK 9032.1	–	–	140	142	146	148	154	159	168	174	225	249	–	–	–	–	–	–	–	–	–	–	–	–	–
SK 9033.1	153	155	157	159	163	165	–	–	–	–	–	–	–	–	–	–	–	–	–	–	–	–	–	–	–
SK 9042.1	–	–	–	–	–	–	258	262	271	278	329	353	392	430	–	–	–	–	–	–	–	–	–	–	–
SK 9043.1	–	–	277	278	282	284	291	–	–	–	–	–	–	–	–	–	–	–	–	–	–	–	–	–	–
SK 9052.1	–	–	–	–	–	–	423	428	437	443	494	518	558	595	648	648	–	–	–	–	–	–	–	–	–
SK 9053.1	–	–	–	450	454	456	463	467	–	–	–	–	–	–	–	–	–	–	–	–	–	–	–	–	–
SK 9072.1	–	–	–	–	–	–	–	–	745	752	803	827	867	904	957	957	1114	1186	1259	–	–	–	–	–	–
SK 9072.1/32	–	–	–	794	798	800	807	811	820	827	–	–	–	–	–	–	–	–	–	–	–	–	–	–	–
SK 9072.1/42	–	–	–	–	–	–	–	849	–	–	–	–	–	–	–	–	–	–	–	–	–	–	–	–	–
SK 9082.1	–	–	–	–	–	–	–	–	–	–	1376	1400	1440	1477	1530	1530	1687	1760	1832	2238	2624	2734	–	–	–
SK 9082.1/42	–	–	–	–	–	–	1418	1422	1431	–	1488	–	–	–	–	–	–	–	–	–	–	–	–	–	–
SK 9082.1//52	–	–	–	–	–	–	–	–	–	1493	–	–	–	–	–	–	–	–	–	–	–	–	–	–	–
SK 9086.1	–	–	–	–	–	–	–	–	–	–	1927	1951	1991	2029	2082	2082	2238	2311	2384	2789	3175	3285	3660	3837	4167
SK 9086.1/52	–	–	–	–	–	–	2024	2029	2037	2044	2095	2119	2159	–	2249	–	–	–	–	–	–	–	–	–	–
SK 9092.1	–	–	–	–	–	–	–	–	–	–	–	–	3248	3285	3338	3338	3495	3568	3640	4046	4432	4542	4917	5094	5424
SK 9092.1/52	–	–	–	–	–	–	–	3285	3294	3301	3352	3376	3416	3453	3506	3506	–	–	–	–	–	–	–	–	–
SK 9096.1	–	–	–	–	–	–	–	–	–	–	–	–	–	4024	4077	4077	4234	4306	4379	4785	5171	5281	5656	5832	6163
SK 9096.1/62	–	–	–	–	–	–	–	–	4154	4161	4212	4236	4275	4313	4366	4366	4522	4595	4668	–	–	–	–	–	–
SK 9096.1/63	–	–	–	–	–	–	4161	4165	4174	4174	–	–	–	–	–	–	–	–	–	–	–	–	–	–	–

Above weights are approximate. Depending upon ratio, oil quantity and optional equipment, reducer weights may be different than shown.

Exact weights can be obtained after the unit is fully asembled.

Send Quote Requests to info@automatedpt.com
Call +1(800)985-6929 To Order or Order Online At Nordgearmotors.com

Send Quote Requests to info@automatedpt.com
Call +1(800)985-6929 To Order or Order Online At Nordgearmotors.com



Approximate Weights [lb]

Type	W	56C	140TC	180TC	210TC	250TC	280TC	320TC	360TC
SK 92072	15	24	24	–	–	–	–	–	–
SK 92172	26	35	35	–	–	–	–	–	–
SK 92372	40	49	49	60	–	–	–	–	–
SK 92672	79	86	86	97	112	–	–	–	–
SK 9012.1 **SK 9013.1**	75 86	86 90	86 –	101 –	– –	– –	– –	– –	– –
SK 9016.1 **SK 9017.1**	77 88	88 93	88 –	104 –	– –	– –	– –	– –	– –
SK 92772	99	101	101	112	128	128	–	–	–
SK 9022.1 **SK 9023.1**	93 104	104 108	104 –	119 –	– –	– –	– –	– –	– –
SK 9032.1 **SK 9033.1**	150 154	154 165	154 165	163 –	183 –	– –	– –	– –	– –
SK 9042.1 **SK 9043.1**	276 287	265 291	265 291	280 300	311 –	333 –	– –	– –	– –
SK 9052.1 **SK 9053.1**	441 459	430 463	430 463	445 472	476 –	498 –	498 –	– –	– –
SK 9072.1 **SK 9072.1/32** **SK 9072.1/42**	794 803 862	– 807 –	– 807 851	767 816 897	796 836 919	851 – 942	851 – –	882 – –	915 – –
SK 9082.1 **SK 9082.1/42** **SK 9082.1//52**	1532 1435 1491	– 1424 –	– 1424 –	1338 1440 1495	1369 1471 1526	1424 1493 1548	1424 – 1548	1455 – –	1488 – –
SK 9086.1 **SK 9086.1/52**	2084 2042	– 2031	– 2031	1890 2046	1921 2077	1976 2099	1976 2099	2007 –	2040 –
SK 9092.1 **SK 9092.1/52**	3341 3299	– 3288	– 3288	3147 3303	3177 3334	3233 3356	3233 3356	3263 –	3296 –
SK 9096.1 **SK 9096.1/62** **SK 9096.1/63**	4221 4298 4315	– 4287 4304	– 4287 4304	– 4302 4319	4057 4333 4350	4113 4355 4372	4113 4355 4372	4143 – –	4176 – –

Above weights are approximate. Depending upon ratio, oil quantity and optional equipment, reducer weights may be different than shown.

Exact weights can be obtained after the unit is fully asembled.

Send Quote Requests to info@automatedpt.com
Call +1(800)985-6929 To Order or Order Online At Nordgearmotors.com

Send Quote Requests to info@automatedpt.com
Call +1(800)985-6929 To Order or Order Online At Nordgearmotors.com

Helical-Worm Weights - Gearmotor



lb

NORD DRIVESYSTEMS

Approximate Wieghts [lb]

Type	63S	63 L	71 S	71 L	80 S	80 L	90 S	90 L	100 L	100 LA	132 S	132 M	160 M	160 L
SK 02040	27	28	31	33	37	39	46	–	–	–	–	–	–	–
SK 02050	43	45	47	49	53	55	62	66	–	–	–	–	–	–
SK 13050	54	–	58	–	–	–	–	–	–	–	–	–	–	–
SK 12063	52	53	56	58	62	64	71	75	84	–	–	–	–	–
SK 13063	63	–	67	–	–	–	–	–	–	–	–	–	–	–
SK 12080	–	75	78	80	84	86	93	97	106	112	–	–	–	–
SK 13080	85	86	89	91	–	–	–	–	–	–	–	–	–	–
SK 32100	–	–	–	137	141	143	150	154	163	170	221	245	–	–
SK 33100	149	150	153	155	159	161	–	172	–	–	–	–	–	–
SK 42125	–	–	–	–	–	–	238	243	251	258	309	333	373	410
SK 43125	–	–	261	263	267	269	276	280	289	295	–	–	–	–

Above weights are approximate. Depending upon ratio, oil quantity and optional equipment, reducer weights may be different than shown.

Exact weights can be obtained after the unit is fully asembled.

Send Quote Requests to info@automatedpt.com
Call +1(800)985-6929 To Order or Order Online At Nordgearmotors.com

Send Quote Requests to info@automatedpt.com
Call +1(800)985-6929 To Order or Order Online At Nordgearmotors.com



Approximate Weights [lb]

Type	W	56C	140TC	180TC	210TC	250TC	280TC	320TC	360TC
SK 02040	24	33	–	–	–	–	–	–	–
SK 02050 **SK 13050**	44 55	55 66	55 –	– –	– –	– –	– –	– –	– –
SK 12063 **SK 13063**	53 64	64 75	64 –	79 –	– –	– –	– –	– –	– –
SK 12080 **SK 13080**	75 86	86 97	86 –	101 –	– –	– –	– –	– –	– –
SK 32100 **SK 33100**	146 150	150 161	150 161	159 –	179 –	– –	– –	– –	– –
SK 42125 **SK 43125**	256 271	245 276	245 276	260 284	291 315	313 –	– –	– –	– –

Above weights are approximate. Depending upon ratio, oil quantity and optional equipment, reducer weights may be different than shown.

Exact weights can be obtained after the unit is fully asembled.

Send Quote Requests to info@automatedpt.com
Call +1(800)985-6929 To Order or Order Online At Nordgearmotors.com

NOTES

Notes



DRIVESYSTEMS

Send Quote Requests to info@automatedpt.com
Call +1(800)985-6929 To Order or Order Online At Nordgearmotors.com

Send Quote Requests to info@automatedpt.com
Call +1(800)985-6929 To Order or Order Online At Nordgearmotors.com

In-line Helical Gearmotors

Selection

- Order Form
- Unit Examples
- 0.16 hp
- 0.25 hp
- 0.33 hp
- 0.50 hp
- 0.75 hp
- 1.0 hp
- 1.5 hp
- 2.0 hp
- 3.0 hp
- 5.0 hp
- 7.5 hp
- 10 hp
- 15 hp
- 20 hp
- 25 hp
- 30 hp
- 40 hp
- 50 hp
- 60 hp
- 75 hp
- 100 hp
- 125 hp
- 150 hp
- 175 hp
- 200 hp



NORD® DRIVESYSTEMS

www.nord.com

UNICASE™

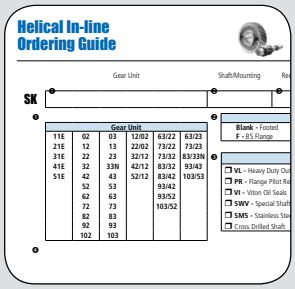

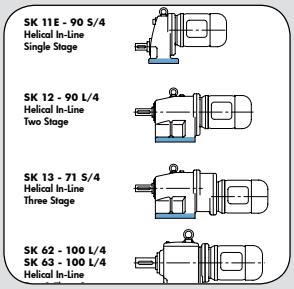

Motor Power P_n [hp]	Output Speed n_2 [rpm]	Output Torque T_a [lb-in]	Service Factor f_B	AGMA Class	
0.16	1259	8	26.3	III	1
	1104	9	25.3	III	1
	939	11	24.4	III	1
	833	12	23.5	III	2
	733	14	22.6	III	2
	601	17	21.2	III	2
	535	19	18.7	III	3
	472	21	17.3	III	3
	187	54	3.7	III	9
	576	18	22.0	III	3
	503	20	21.0	III	

Send Quote Requests to info@automatedpt.com
Call +1(800)985-6929 To Order or Order Online At Nordgearmotors.com

Helical In-line Ordering Guide

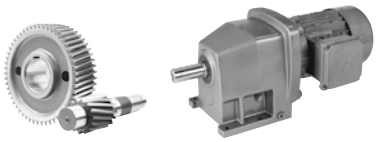

NORD DRIVESYSTEMS

GEARMOTORS

	Gear Unit	Shaft/Mounting	Reducer Options		Input/Motor	Motor Options
SK	❶	❷	❸	–	❹	
					see page 690	see page 690

❶

Gear Unit					
11E	02	03	12/02	63/22	63/23
21E	12	13	22/02	73/22	73/23
31E	22	23	32/12	73/32	83/33N
41E	32	33N	42/12	83/32	93/43
51E	42	43	52/12	83/42	103/53
	52	53		93/42	
	62	63		93/52	
	72	73		103/52	
	82	83			
	92	93			
	102	103			

❷

Shaft/Mounting	
Blank - Footed	**XZ -** Foot/B14 Flange
F - B5 Flange	**XF -** Foot/B5 Flange

❸

Reducer Options	
❒ **VL -** Heavy Duty Output Bearings	❒ **OSG -** Oil Sight Glass
❒ **PR -** Flange Pilot Removal	❒ **OA -** Oil Expansion Chamber
❒ **VI -** Fluoro Rubber Seals	❒ **OC -** Oil Cooler
❒ **SWV -** Special Solid Shaft	❒ **LL -** Long Term Storage
❒ **SM5 -** Stainless Steel Output Shaft	❒ **MDP -** Magnetic Drain Plug
❒ Cross Drilled Shaft	❒ **ADP -** Additional Drain Plug

❹

Input Shaft	NEMA Adapter	IEC	Integral Motors		Integral Energy Efficent Motors		Scoop	Motor Platform	Servo Adapter (Keyed)
W	N56C	IEC 63	**63S/4** - 0.16hp	**160L/4** - 20hp	**80LH/4** - 1hp	**200LH/4** - 40hp	S56	MKN056	SEP 100
	N140TC	IEC 71	**63L/4** - 0.25hp	**180MX/4** - 25hp	**90SH/4** - 1.5hp	**225SH/4** - 50hp	S140T	MKN140	SEP 130
	N180TC	IEC 80	**71S/4** - 0.33hp	**180LX/4** - 30hp	**90LH/4** - 2hp	**225MH/4** - 60hp	S180T	MKN180	SEP 165
	N210TC	IEC 90	**71L/4** - 0.50hp	**200L/4** - 40hp	**100LH/4** - 3hp	**250MH/4** - 75hp	S210T	MKN210	SEP 215
	N250TC	IEC 100	**80S/4** - 0.75hp	**225S/4** - 50hp	**112MH/4** - 5hp	**280SH/4** - 100hp	S250T	MKN250	SEP 300
	N280TC	IEC 112	**80L/4** - 1hp	**225M/4** - 60hp	**132SH/4** - 7.5hp	**280MH/4** - 125hp	S280T	MKN280	Servo Adapter (Clamp)
	N320TC	IEC 132	**90S/4** - 1.5hp	**250M/4** - 75hp	**132MH/4** - 10hp	**315SH/4** - 150hp	S320T	MKN320	
	N360TC	IEC 160	**90L/4** - 2hp	**280S/4** - 100hp	**160MH/4** - 15hp	**315MH/4** - 175hp	S360T	MKN360	SEK 100
	N400TC	IEC 180	**100L/4** - 3hp	**280M/4** - 125hp	**160LH/4** - 20hp	**315MAH/4** - 200hp	S400T	MKN400	SEK 130
		IEC 200	**100LA/4** - 5hp	**315S/4** - 150hp	**180MH/4** - 25hp	**315LH/4** - 250hp			SEK 165
		IEC 225	**112M/4** - 5.4hp	**315M/4** - 175hp	**180LH/4** - 30hp				SEK 215
		IEC 250	**132S/4** - 7.5hp	**315MA/4** - 200hp					SEK 300
		IEC 280	**132M/4** - 10hp	**315L/4** - 250hp					
		IEC 315	**160M/4** - 15hp	Other Speeds Available		Other Speeds Available			

Product Specifications

Ratio

_____ :1

see pages 88 - 125

— **OR**—

Output Speed

_____ rpm

see pages 88 - 125

Mounting Position

- ❍ M1
- ❍ M2
- ❍ M3
- ❍ M4
- ❍ M5
- ❍ M6
- ❍ Special _____

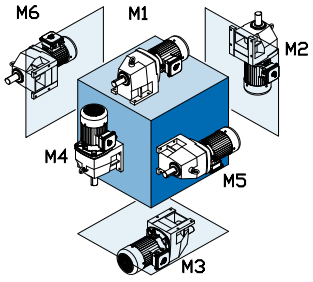

Paint

- ❍ Standard Stainles Steel Paint
- ❍ NSD+ (gray)
- ❍ NSD+W (white)
- ❍ NSD-X3 (gray)
- ❍ NSD-X3W (white)
- ❍ Casting Primed
- ❍ Special _____

Lubricant

- ❍ Standard
- ❍ Synthetic
- ❍ Food Grade
- ❍ Other _____

B5 Flange Diameter (If required)

_____

Gearmotor Only Details

Voltage & Frequency

- ❍ 230/460V-60Hz (460V only ≥ 40 hp)
- ❍ 575V-60Hz
- ❍ 208V-60Hz
- ❍ 400V-50Hz
- ❍ 115/230V-60Hz, 1 ph.
- ❍ Other _____

Terminal Box Pos.

- ❍ TB1
- ❍ TB2
- ❍ TB3
- ❍ TB4

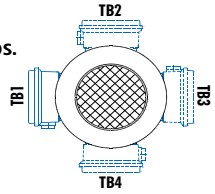

Mtg. Pos. M1 Shown

Conduit Entry Loc.

- ❍ CE I *
- ❍ CE II
- ❍ CE III *
- ❍ CE IV

* Brakemotor

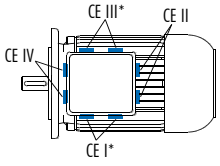

Mtg. Pos. M1 Shown

Send Quote Requests to info@automatedpt.com
Call +1(800)985-6929 To Order or Order Online At Nordgearmotors.com

DRIVESYSTEMS

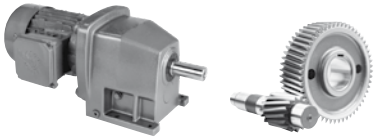

Unit Examples

Examples of Available Helical In-line Units with Post Mounted Design

SK 11E - 90 S/4
Helical In-Line
Single Stage

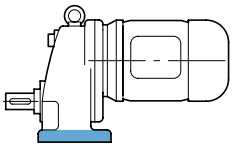

SK 12 - 90 L/4
Helical In-Line
Two Stage

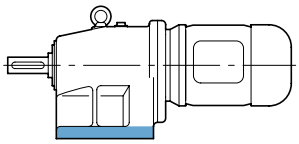

SK 13 - 71 S/4
Helical In-Line
Three Stage

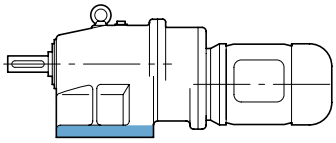

SK 62 - 100 L/4
SK 63 - 100 L/4
Helical In-Line
Two & Three Stage

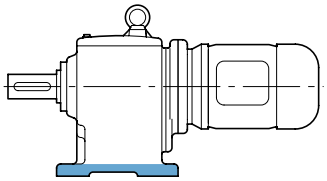

SK 12/02 - 63 S/4
Helical In-Line
Four Stage

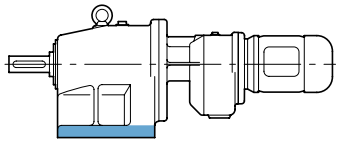

SK 63/22 - 80 S/4
Helical In-Line
Five Stage

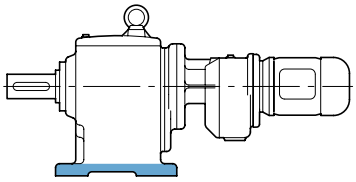

Examples of Available Helical In-line Units with Flange Mount Design

SK 11EF - 90 S/4
Helical In-Line
with B5 Flange
Single Stage

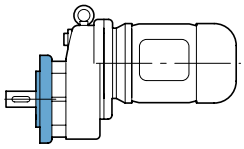

SK 12F - 90 L/4
Helical In-Line
with B5 Flange
Two Stage

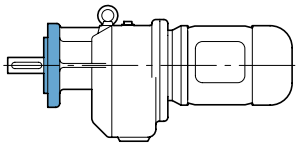

SK 13F - 71 S/4
Helical In-Line
with B5 Flange
Three Stage

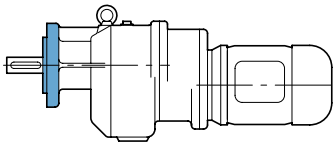

SK 62F - 100 L/4
SK 63F - 100 L/4
Helical In-Line
with B5 Flange
Two & Three Stage

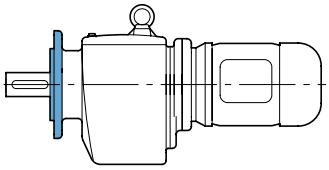

SK 12/02F - 63 S/4
Helical In-Line
with B5 Flange
Four Stage

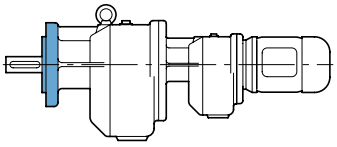

SK 63/22F - 80 S/4
Helical In-Line
With B5 Flange
Five Stage

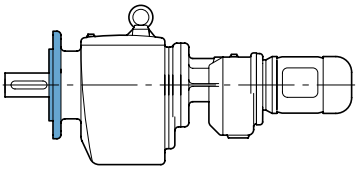

Housing Options for Foot-Flange Mounting

SK 12XZ - 80 L/4
Helical In-Line with
Foot Mount & B14 Flange
Two Stage

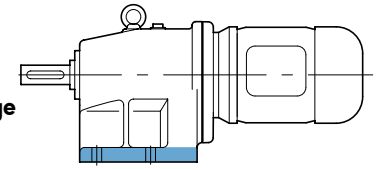

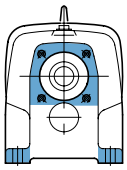

SK 12XF - 80 L/4
Helical In-Line with
Foot Mount & B5 Flange
Two Stage

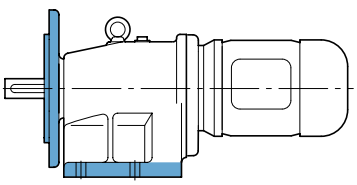

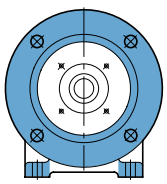

Send Quote Requests to info@automatedpt.com
Call +1(800)985-6929 To Order or Order Online At Nordgearmotors.com

0.16 hp Gearmotors

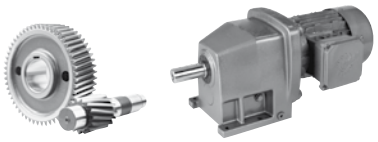

DRIVESYSTEMS

GEARMOTORS

Motor Power P_n [hp]	Output Speed n_2 [rpm]	Output Torque T_a [lb-in]	Service Factor f_B	AGMA Class	Gear Ratio i_{tot}	Standard Bearings F_{RN} OHL [lb]	Standard Bearings F_{AN} Thrust [lb]	Heavy Duty Bearings (VL) F_{RVL} OHL [lb]	Heavy Duty Bearings (VL) F_{AVL} Thrust [lb]	Model Type	Weight [lb]	Dim. Page
0.16	1259	8	26.3	III	1.35		549			SK 11E - 63S/4	21	152
	1104	9	25.3	III	1.54		581					
	939	11	24.4	III	1.81		623					
	833	12	23.5	III	2.04		657					
	733	14	22.6	III	2.32		693					
	601	17	21.2	III	2.83		756					
	535	19	18.7	III	3.18		797					
	472	21	17.3	III	3.60		837					
	187	54	3.7	III	9.11		956					
	576	18	22.0	III	2.95	342	594	488	698	SK 02 - 63S/4	26	167
	503	20	21.0	III	3.38	358	628	511	727			
	437	23	20.0	III	3.89	374	666	536	763			
	403	25	18.3	III	4.22	385	693	551	783			
	353	29	17.5	III	4.82	401	729	574	817			
	305	33	15.2	III	5.57	421	736	603	857			
	279	36	13.9	III	6.10	434	736	623	884			
	247	41	13.1	III	6.89	452	736	644	918			
	218	47	12.0	III	7.80	470	736	671	956			
	208	49	11.4	III	8.19	477	736	682	970			
	183	55	10.4	III	9.28	497	736	711	1010			
	171	59	9.5	III	9.95	509	736	727	1035			
	151	67	8.8	III	11.27	529	736	754	1076			
	133	76	8.1	III	12.82	542	736	754	1121			
	107	95	6.7	III	15.95	542	736	754	1202			
	83	123	5.3	III	20.59	542	736	754	1301			
	73	138	5.0	III	23.13	542	736	754	1341			
	62	164	4.7	III	27.52	540	736	752	1406			
	51	199	4.3	III	33.42	540	736	752	1406			
	41	248	3.5	III	41.58	538	736	749	1406			
	32	320	2.5	III	53.68	533	736	747	1406			
	28	366	2.2	III	61.27	531	736	745	1406			
	23	436	1.8	II	73.06	524	736	740	1406			
	26	391	2.5	III	65.50	529	736	745	1406	SK 03 - 63S/4	34	170
	21	486	1.9	II	81.50	520	736	738	1406			
	16	625	1.3	I	104.77	504	736	727	1406			
	14	743	1.3	I	124.62	486	736	716	1406			
	11	903	1.1	I	151.33	457	736	695	1406			
	10	1019	0.9	*	170.75	432	736	677	1406			
	8	1173	0.8	*	212.47	387	736	650	1406			
	6.2	985	0.8	*	274.28	439	736	684	1406			
	28	366	3.7	III	61.35	824	900	1143	2131	SK 12 - 63S/4	30	173
	23	433	2.8	III	72.63	821	900	1141	2228			
	25	408	4.3	III	68.40	824	900	1141	2189	SK 13 - 63S/4	41	176
	20	510	3.1	III	85.47	819	900	1139	2327			
	16	649	2.4	III	108.72	812	900	1134	2477			
	13	790	1.7	II	132.45	803	900	1127	2583			
	11	951	1.6	II	159.36	790	900	1118	2707			
	8.7	1168	1.5	II	195.78	770	900	1105	2849			
	6.9	1459	1.1	I	244.62	734	900	1080	3008			
	6.2	1641	0.9	*	275.12	707	900	1062	3087			
	5.4	1847	0.8	*	313.48	671	900	1037	3182			
	4.6	1947	0.8	*	369.34	650	900	1024	3263			

(AGMA Class I = f_B 1.0 - 1.39 II = f_B 1.4 - 1.99 III = f_B ≥ 2.0 * = f_B < 1.0)

Send Quote Requests to info@automatedpt.com
Call +1(800)985-6929 To Order or Order Online At Nordgearmotors.com

DRIVESYSTEMS

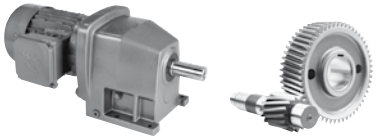

0.16 hp Gearmotors

Motor Power P_n [hp]	Output Speed n_2 [rpm]	Output Torque T_a [lb-in]	Service Factor f_B	AGMA Class	Gear Ratio i_{tot}	Standard Bearings F_{RN} OHL [lb]	Standard Bearings F_{AN} Thrust [lb]	Heavy Duty Bearings (VL) F_{RVL} OHL [lb]	Heavy Duty Bearings (VL) F_{AVL} Thrust [lb]	Model Type	Weight [lb]	Dim. Page
0.16	3.9	1717	0.9	*	431.75	693	900	1053	3263	**SK 12/02 - 63S/4**	48	233
	3.2	1991	0.8	*	537.49	641	900	1019	3263			
	2.7	1991	0.8	*	619.86	641	900	1019	3263			
	1.9	1991	0.8	*	886.11	641	900	1019	3263			
	1.6	1991	0.8	*	1054.29	641	900	1019	3263			
	1.3	1991	0.8	*	1280.32	641	900	1019	3263			
	1.1	1991	0.8	*	1592.93	641	900	1019	3263			
	11	903	2.9	III	151.44	1211	1260	1676	3224	**SK 23 - 63S/4**	67	182
	9.5	1071	2.6	III	179.50	1202	1260	1670	3377			
	7.8	1299	2.3	III	217.73	1190	1260	1663	3551			
	6.5	1565	1.9	II	262.24	1175	1260	1649	3731			
	5.3	1931	1.6	II	323.70	1143	1260	1629	3926			
	4.1	2493	1.2	I	417.95	1085	1260	1589	4154			
	3.3	3031	0.8	*	516.65	1010	1260	1537	4365			
	3.1	2201	1.4	II	553.31	1118	1260	1611	4500	**SK 22/02 - 63S/4**	75	233
	2.5	2716	1.1	I	682.98	1055	1260	1568	4500			
	1.9	3507	0.9	*	881.66	925	1260	1483	4500			
	1.5	3761	0.8	*	1159.34	871	1260	1449	4500			
	1.2	3761	0.8	*	1442.41	871	1260	1449	4500			
	6.9	1481	4.0	III	248.17	1535	2025	2124	4966	**SK 33N - 63S/4**	94	188
	5	2023	2.8	III	339.15	1523	2025	2115	5380			
	4	2514	2.4	III	421.32	1510	2025	2104	5625			
	3.2	3127	1.9	II	524.08	1487	2025	2088	5625			
	2.9	3493	1.6	II	585.41	1472	2025	2077	5625			
	2.6	3954	1.3	I	662.81	1449	2025	2061	5625			
	2.3	4417	1.1	I	740.37	1422	2025	2043	5625			
	2.4	2782	2.0	III	699.55	1501	2025	2099	5625	**SK 32/12 - 63S/4**	104	233
	2	3456	1.6	II	869.04	1474	2025	2079	5625			
	1.6	4296	1.3	I	1080.05	1431	2025	2050	5625			
	1.3	5193	1.1	I	1305.66	1373	2025	2009	5625			
	6.1	1101	9.6	III	276.92	1888	2700	2601	4707	**SK 42/12 - 63S/4**	142	233
	4.9	1378	7.7	III	346.53	1886	2700	2599	5011			
	3.9	1724	6.2	III	433.49	1881	2700	2597	5326			
	3.1	2190	4.8	III	550.73	1872	2700	2590	5679			
	2.3	2984	3.6	III	750.33	1856	2700	2579	6154			
	1.5	4433	2.4	III	1114.65	1809	2700	2545	6750			
	1.2	5542	1.9	II	1393.38	1760	2700	2509	6750			
	1.1	6211	1.7	II	1561.55	1724	2700	2484	6750			
	1.9	3654	4.4	III	918.83	3184	5344	4455	9000	**SK 52/12 - 63S/4**	206	233
	1.2	5669	2.9	III	1425.44	3148	5344	4428	9000			

(AGMA Class I = f_B 1.0 - 1.39 II = f_B 1.4 - 1.99 III = f_B ≥ 2.0 * = f_B < 1.0)

Send Quote Requests to info@automatedpt.com
Call +1(800)985-6929 To Order or Order Online At Nordgearmotors.com

0.25 hp Gearmotors

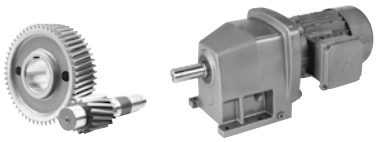

DRIVESYSTEMS

GEARMOTORS

Motor Power P_n [hp]	Output Speed n_2 [rpm]	Output Torque T_2 [lb-in]	Service Factor f_B	AGMA Class	Gear Ratio i_{tot}	Standard Bearings F_{RN} OHL [lb]	Standard Bearings F_{AN} Thrust [lb]	Heavy Duty Bearings (VL) F_{RVL} OHL [lb]	Heavy Duty Bearings (VL) F_{AVL} Thrust [lb]	Model Type	Weight [lb]	Dim. Page
0.25	1244	13	16.6	III	1.35		551			SK 11E - 63L/4	22	152
	1091	15	15.8	III	1.54		585					
	928	17	15.2	III	1.81		626					
	824	19	14.7	III	2.04		659					
	724	22	14.1	III	2.32		698					
	594	27	13.2	III	2.83		758					
	528	30	11.6	III	3.18		799					
	467	34	10.8	III	3.60		844					
	184	87	2.3	III	9.11		956					
	569	28	13.7	III	2.95	342	590	488	695	SK 02 - 63L/4	27	167
	497	32	13.1	III	3.38	358	626	511	727			
	432	37	12.5	III	3.89	374	662	533	758			
	398	40	11.4	III	4.22	385	686	549	781			
	349	46	10.9	III	4.82	401	722	572	812			
	302	53	9.5	III	5.57	419	736	599	851			
	275	58	8.7	III	6.10	432	736	619	878			
	244	66	8.2	III	6.89	450	736	641	911			
	215	75	7.5	III	7.80	468	736	668	947			
	205	78	7.1	III	8.19	477	736	677	963			
	181	89	6.5	III	9.28	495	736	704	999			
	169	95	6.0	III	9.95	506	736	720	1026			
	149	108	5.5	III	11.27	527	736	749	1064			
	131	123	5.1	III	12.82	542	736	754	1107			
	105	152	4.2	III	15.95	542	736	754	1184			
	82	197	3.3	III	20.59	540	736	752	1283			
	73	221	3.1	III	23.13	538	736	752	1314			
	61	263	2.9	III	27.52	538	736	749	1384			
	50	319	2.7	III	33.42	533	736	747	1406			
	40	397	2.2	III	41.58	529	736	743	1406			
	31	513	1.5	II	53.68	518	736	736	1406			
	27	586	1.3	I	61.27	509	736	729	1406			
	23	698	1.1	I	73.06	495	736	720	1406			
	26	626	1.6	II	65.50	504	736	727	1406	SK 03 - 63L/4	36	170
	21	779	1.2	I	81.50	482	736	711	1406			
	16	1001	0.8	*	104.77	434	736	680	1406			
	13	1191	0.8	*	124.62	383	736	648	1406			
	39	412	3.5	III	43.09	824	900	1141	1899	SK 12 - 63L/4	31	173
	31	515	3.0	III	53.84	819	900	1139	2018			
	27	586	2.3	III	61.35	815	900	1136	2084			
	23	694	1.8	II	72.63	810	900	1132	2176			
	25	654	2.7	III	68.40	812	900	1134	2140	SK 13 - 63L/4	42	176
	20	817	1.9	II	85.47	801	900	1127	2261			
	15	1039	1.5	II	108.72	783	900	1114	2396			
	13	1266	1.0	I	132.45	758	900	1096	2462			
	11	1523	1.0	I	159.36	725	900	1073	2570			
	8.6	1871	0.9	*	195.78	666	900	1035	2684			
	10	1251	1.3	I	165.77	761	900	1098	2689	SK 12/02 - 63L/4	49	233
	7.9	1610	1.0	I	213.39	711	900	1064	2835			
	6.4	1992	0.8	*	263.96	641	900	1017	2950			

(AGMA Class I = f_B 1.0 - 1.39 II = f_B 1.4 - 1.99 III = f_B ≥ 2.0 * = f_B < 1.0)

Send Quote Requests to info@automatedpt.com
Call +1(800)985-6929 To Order or Order Online At Nordgearmotors.com

NORD DRIVESYSTEMS

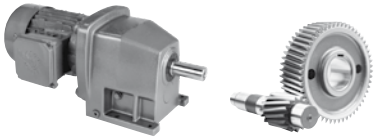

0.25 hp Gearmotors

Motor Power P_n [hp]	Output Speed n_2 [rpm]	Output Torque T_a [lb-in]	Service Factor f_B	AGMA Class	Gear Ratio i_{tot}	Standard Bearings F_{RN} OHL [lb]	Standard Bearings F_{AN} Thrust [lb]	Heavy Duty Bearings (VL) F_{RVL} OHL [lb]	Heavy Duty Bearings (VL) F_{AVL} Thrust [lb]	Model Type	Weight [lb]	Dim. Page
0.25	26	619	4.9	III	64.80	1220	1260	1683	2538	SK 23 - 63L/4	69	182
	22	746	4.0	III	78.05	1215	1260	1681	2669			
	19	845	3.6	III	88.45	1213	1260	1676	2756			
	17	962	3.1	III	100.60	1208	1260	1674	2844			
	14	1187	2.5	III	124.17	1197	1260	1667	2999			
	11	1448	1.8	II	151.44	1181	1260	1656	3116			
	9.4	1716	1.6	II	179.50	1163	1260	1643	3256			
	7.7	2081	1.4	II	217.73	1130	1260	1620	3411			
	6.4	2507	1.2	I	262.24	1085	1260	1586	3555			
	5.2	3094	1.0	I	323.70	999	1260	1530	3706			
	4	3995	0.8	*	417.95	815	1260	1415	3877			
	4.9	2605	1.2	I	345.17	1071	1260	1580	3890	SK 22/02 - 63L/4	77	233
	3.8	3356	0.9	*	444.73	954	1260	1501	4088			
	13	1281	4.5	III	134.02	1539	2025	2126	4129	SK 33N - 63L/4	95	188
	10	1591	3.7	III	166.49	1532	2025	2122	4381			
	8.1	1980	3.0	III	207.10	1523	2025	2115	4635			
	6.8	2372	2.5	III	248.17	1514	2025	2108	4847			
	5	3242	1.8	II	339.15	1483	2025	2086	5202			
	4	4027	1.5	II	421.32	1445	2025	2059	5492			
	3.2	5009	1.2	I	524.08	1384	2025	2018	5625			
	2.9	5596	1.0	I	585.41	1341	2025	1987	5625			
	2.5	6335	0.8	*	662.81	1276	2025	1944	5625			
	4.6	2740	2.0	III	363.06	1501	2025	2099	5423	SK 32/12 - 63L/4	105	233
	3.8	3368	1.6	II	446.31	1476	2025	2081	5625			
	3	4186	1.3	I	554.68	1436	2025	2052	5625			
	2.4	5279	1.0	I	699.55	1366	2025	2005	5625			
	1.9	6558	0.8	*	869.04	1256	2025	1931	5625			
	7.3	1736	6.1	III	230.05	1881	2700	2597	4374	SK 42/12 - 63L/4	144	233
	6.1	2090	5.1	III	276.92	1874	2700	2592	4604			
	4.8	2615	4.1	III	346.53	1865	2700	2583	4860			
	3.9	3271	3.2	III	433.49	1847	2700	2572	5141			
	3.1	4156	2.6	III	550.73	1820	2700	2552	5438			
	2.2	5662	1.9	II	750.33	1753	2700	2504	5816			
	1.5	8411	1.3	I	1114.65	1568	2700	2378	6282			
	1.2	10515	1.0	I	1393.38	1350	2700	2241	6518			
	1.1	11784	0.9	*	1561.55	1172	2700	2138	6593			
	2.4	5202	3.1	III	689.41	3157	5344	4435	9000	SK 52/12 - 63L/4	208	233
	1.8	6934	2.3	III	918.83	3116	5344	4408	9000			
	1.6	8029	3.5	III	1064.04	4532	10125	6338	10125	SK 63/23 - 63L/4	353	235
	1.2	10631	2.7	III	1408.77	4478	10125	6300	10125			
	1	12652	2.2	III	1676.63	4426	10125	6262	10125			

(AGMA Class I = f_B 1.0 - 1.39 II = f_B 1.4 - 1.99 III = f_B ≥ 2.0 * = f_B < 1.0)

Send Quote Requests to info@automatedpt.com
Call +1(800)985-6929 To Order or Order Online At Nordgearmotors.com

0.33 hp Gearmotors

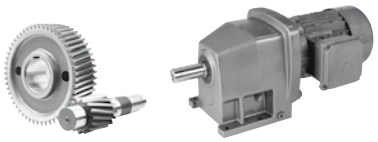

DRIVESYSTEMS

GEARMOTORS

Motor Power P_n [hp]	Output Speed n_2 [rpm]	Output Torque T_2 [lb-in]	Service Factor f_B	AGMA Class	Gear Ratio i_{tot}	Standard Bearings F_{RN} OHL [lb]	Standard Bearings F_{AN} Thrust [lb]	Heavy Duty Bearings (VL) F_{RVL} OHL [lb]	Heavy Duty Bearings (VL) F_{AVL} Thrust [lb]	Model Type	Weight [lb]	Dim. Page
0.33	1267	16	12.8	III	1.35		549			SK 11E - 71S/4	25	152
	1110	19	12.2	III	1.54		581					
	945	22	11.8	III	1.81		623					
	838	25	11.4	III	2.04		657					
	737	29	10.9	III	2.32		691					
	604	35	10.2	III	2.83		754					
	538	39	9.0	III	3.18		792					
	475	44	8.4	III	3.60		837					
	188	113	1.8	II	9.11		956					
	580	36	10.6	III	2.95	338	583	484	686	SK 02 - 71S/4	30	167
	506	42	10.1	III	3.38	353	614	504	718			
	440	48	9.7	III	3.89	369	650	527	749			
	405	52	8.8	III	4.22	380	675	542	772			
	355	60	8.5	III	4.82	396	711	565	801			
	307	69	7.3	III	5.57	414	736	592	842			
	280	75	6.7	III	6.10	428	736	610	866			
	248	85	6.3	III	6.89	443	736	632	900			
	219	96	5.8	III	7.80	461	736	657	932			
	209	101	5.5	III	8.19	468	736	668	947			
	184	115	5.0	III	9.28	486	736	695	986			
	172	123	4.6	III	9.95	497	736	711	1006			
	152	139	4.3	III	11.27	518	736	738	1049			
	133	158	3.9	III	12.82	538	736	754	1085			
	107	197	3.2	III	15.95	540	736	752	1159			
	83	254	2.6	III	20.59	538	736	749	1249			
	74	286	2.4	III	23.13	536	736	749	1278			
	62	340	2.3	III	27.52	533	736	747	1343			
	51	413	2.1	III	33.42	527	736	743	1406			
	41	514	1.7	II	41.58	518	736	736	1406			
	32	663	1.2	I	53.68	500	736	722	1406			
	28	757	1.0	I	61.27	484	736	713	1406			
	23	903	0.9	*	73.06	457	736	695	1406			
	26	809	1.2	I	65.50	475	736	707	1406	SK 03 - 71S/4	38	170
	21	1007	0.9	*	81.50	434	736	680	1406			
	49	433	3.0	III	35.07	815	900	1141	1760	SK 12 - 71S/4	34	173
	40	532	2.7	III	43.09	819	900	1139	1859			
	32	665	2.3	III	53.84	810	900	1134	1973			
	28	758	1.8	II	61.35	806	900	1130	2034			
	24	897	1.4	II	72.63	794	900	1123	2113			
	25	845	2.1	III	68.40	799	900	1125	2077	SK 13 - 71S/4	45	176
	20	1056	1.5	II	85.47	781	900	1112	2189			
	16	1343	1.2	I	108.72	749	900	1091	2304			
	13	1637	0.8	*	132.45	707	900	1062	2347			
	11	1969	0.8	*	159.36	646	900	1022	2441			
	18	964	1.5	II	92.89	790	900	1118	2264	SK 12/02 - 71S/4	52	233
	16	1138	1.3	I	109.66	774	900	1107	2349			
	13	1383	1.0	I	133.23	745	900	1087	2446			
	10	1721	0.9	*	165.77	693	900	1053	2554			

(AGMA Class I = f_B 1.0 - 1.39 II = f_B 1.4 - 1.99 III = f_B ≥ 2.0 * = f_B < 1.0)

Send Quote Requests to info@automatedpt.com
Call +1(800)985-6929 To Order or Order Online At Nordgearmotors.com

NORD DRIVESYSTEMS

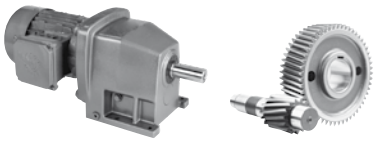

0.33 hp Gearmotors

Motor Power P_n [hp]	Output Speed n_2 [rpm]	Output Torque T_a [lb-in]	Service Factor f_B	AGMA Class	Gear Ratio i_{tot}	Standard Bearings F_{RN} OHL [lb]	Standard Bearings F_{AN} Thrust [lb]	Heavy Duty Bearings (VL) F_{RVL} OHL [lb]	Heavy Duty Bearings (VL) F_{AVL} Thrust [lb]	Model Type	Weight [lb]	Dim. Page
0.33	37	567	4.6	III	45.90	1220	1260	1683	2270	**SK 22 - 71S/4**	54	179
	31	683	4.1	III	55.28	1217	1260	1681	2390			
	24	863	2.7	III	69.81	1211	1260	1676	2538			
	20	1066	2.1	III	86.30	1202	1260	1670	2682			
	26	801	3.8	III	64.80	1213	1260	1679	2486	**SK 23 - 71S/4**	71	182
	22	964	3.1	III	78.05	1208	1260	1674	2608			
	19	1093	2.8	III	88.45	1202	1260	1670	2689			
	17	1243	2.4	III	100.60	1193	1260	1665	2781			
	14	1534	2.0	III	124.17	1175	1260	1652	2914			
	11	1871	1.4	II	151.44	1150	1260	1634	3015			
	9.5	2218	1.2	I	179.50	1116	1260	1609	3132			
	7.9	2690	1.1	I	217.73	1060	1260	1571	3272			
	6.5	3240	0.9	*	262.24	974	1260	1514	3393			
	5.3	4000	0.8	*	323.70	812	1260	1415	3510			
	19	1090	4.4	III	88.18	1541	2025	2126	3620	**SK 33N - 71S/4**	98	188
	15	1386	3.5	III	112.18	1537	2025	2124	3854			
	13	1656	3.5	III	134.02	1532	2025	2122	4043			
	10	2057	2.9	III	166.49	1523	2025	2115	4291			
	8.3	2559	2.3	III	207.10	1508	2025	2104	4518			
	6.9	3066	1.9	II	248.17	1490	2025	2090	4709			
	5	4191	1.4	II	339.15	1436	2025	2052	5022			
	4.1	5206	1.1	I	421.32	1370	2025	2007	5276			
	3.3	6476	0.9	*	524.08	1262	2025	1935	5492			
	2.9	7234	0.8	*	585.41	1181	2025	1883	5609			
	3.1	5757	1.0	I	554.68	1328	2025	1980	5625	**SK 32/12 - 71S/4**	108	233
	2.4	7261	0.8	*	699.55	1179	2025	1881	5625			
	9.4	2258	4.0	III	182.76	1872	2700	2590	3960	**SK 43 - 71S/4**	144	194
	7.8	2710	3.9	III	219.32	1863	2700	2583	4154			
	6.5	3261	3.4	III	263.93	1847	2700	2572	4338			
	5.7	3692	2.7	III	298.80	1836	2700	2563	4464			
	4.8	4443	2.6	III	359.59	1809	2700	2545	4649			
	4.1	5203	2.0	III	421.11	1775	2700	2520	4815			
	3.2	6529	1.3	I	528.37	1706	2700	2471	5011			
	2.8	7646	1.3	I	618.76	1629	2700	2419	5175			
	2.2	9441	1.0	I	764.03	1472	2700	2318	5378			
	3.9	4499	2.4	III	433.49	1807	2700	2543	4948	**SK 42/12 - 71S/4**	146	233
	3.1	5716	1.9	II	550.73	1751	2700	2502	5200			
	2.3	7788	1.4	II	750.33	1618	2700	2412	5499			
	1.5	11569	0.9	*	1114.65	1206	2700	2158	5828			
	3.5	5099	3.2	III	491.28	3159	5344	4437	9000	**SK 52/12 - 71S/4**	210	233
	3.2	5627	2.9	III	542.09	3150	5344	4430	9000			
	2.5	7156	2.3	III	689.41	3112	5344	4403	9000			
	1.9	9537	1.7	II	918.83	3033	5344	4347	9000			
	1.2	14795	1.1	I	1425.44	2765	5344	4165	9000			
	1	17800	0.9	*	1714.92	2543	5344	4021	9000			
	1.6	11044	2.6	III	1064.04	4469	10125	6293	10125	**SK 63/23 - 71S/4**	356	235
	1.2	14622	1.9	II	1408.77	4367	10125	6221	10125			
	1	17402	1.6	II	1676.63	4266	10125	6149	10125			

(AGMA Class I = f_B 1.0 - 1.39 II = f_B 1.4 - 1.99 III = f_B ≥ 2.0 * = f_B < 1.0)

Send Quote Requests to info@automatedpt.com
Call +1(800)985-6929 To Order or Order Online At Nordgearmotors.com

0.5 hp Gearmotors

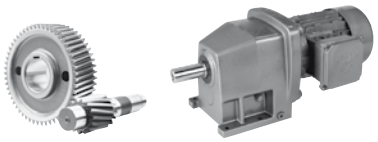

DRIVESYSTEMS

GEARMOTORS

Motor Power P_n [hp]	Output Speed n_2 [rpm]	Output Torque T_2 [lb-in]	Service Factor f_B	AGMA Class	Gear Ratio i_{tot}	Standard Bearings F_{RN} OHL [lb]	Standard Bearings F_{AN} Thrust [lb]	Heavy Duty Bearings (VL) F_{RVL} OHL [lb]	Heavy Duty Bearings (VL) F_{AVL} Thrust [lb]	Model Type	Weight [lb]	Dim. Page
0.5	1274	25	8.5	III	1.35		547			SK 11E - 71L/4	27	152
	1117	28	8.3	III	1.54		581					
	950	33	8.0	III	1.81		621					
	843	37	7.7	III	2.04		653					
	741	42	7.4	III	2.32		691					
	608	51	6.9	III	2.83		752					
	541	58	6.1	III	3.18		790					
	478	65	5.7	III	3.60		833					
	212	147	1.8	II	8.10		956					
	189	166	1.2	I	9.11		956					
	583	54	7.2	III	2.95	333	572	477	677	SK 02 - 71L/4	32	167
	509	61	6.9	III	3.38	349	603	497	707			
	442	71	6.6	III	3.89	365	639	520	738			
	408	77	6.0	III	4.22	374	662	533	758			
	357	88	5.8	III	4.82	389	693	556	788			
	309	101	5.0	III	5.57	407	736	583	826			
	282	111	4.5	III	6.10	421	736	601	851			
	250	125	4.3	III	6.89	437	736	621	880			
	221	142	3.9	III	7.80	452	736	644	911			
	210	149	3.7	III	8.19	461	736	655	927			
	185	169	3.4	III	9.28	477	736	680	961			
	173	181	3.1	III	9.95	488	736	695	981			
	153	205	2.9	III	11.27	509	736	720	1017			
	134	233	2.7	III	12.82	527	736	747	1055			
	108	290	2.2	III	15.95	536	736	749	1125			
	84	374	1.7	II	20.59	529	736	745	1206			
	74	421	1.6	II	23.13	527	736	743	1220			
	71	443	1.8	II	24.39	524	736	740	1240			
	63	500	1.5	II	27.52	520	736	736	1274			
	58	538	1.5	II	29.61	515	736	734	1303			
	51	608	1.4	II	33.42	506	736	729	1337			
	41	756	1.2	I	41.58	486	736	713	1406			
	32	976	0.8	*	53.68	441	736	684	1406			
	103	304	4.5	III	16.73	641	900	1143	1422	SK 12 - 71L/4	36	173
	92	342	4.2	III	18.79	664	900	1143	1467			
	81	387	3.8	III	21.28	689	900	1143	1517			
	66	471	2.6	III	25.92	720	900	1141	1580			
	59	530	2.1	III	29.15	745	900	1139	1627			
	55	567	2.6	III	31.19	761	900	1136	1656			
	49	638	2.1	III	35.07	785	900	1134	1701			
	45	697	2.3	III	38.31	806	900	1132	1746			
	40	783	1.8	II	43.09	803	900	1127	1791			
	36	870	1.8	II	47.87	797	900	1123	1841			
	32	979	1.6	II	53.84	788	900	1118	1890			
	28	1115	1.2	I	61.35	776	900	1109	1942			
	25	1244	1.4	II	68.40	763	900	1098	1973	SK 13 - 71L/4	47	176
	20	1554	1.0	I	85.47	720	900	1071	2066			
	16	1977	0.8	*	108.72	644	900	1019	2144			
	37	835	3.1	III	45.90	1213	1260	1679	2212	SK 22 - 71L/4	56	179
	31	1005	2.8	III	55.28	1206	1260	1672	2320			
	25	1269	1.8	II	69.81	1193	1260	1663	2450			
	20	1569	1.4	II	86.30	1172	1260	1649	2581			

(AGMA Class I = f_B 1.0 - 1.39 II = f_B 1.4 - 1.99 III = f_B ≥ 2.0 * = f_B < 1.0)

Send Quote Requests to info@automatedpt.com
Call +1(800)985-6929 To Order or Order Online At Nordgearmotors.com

NORD DRIVESYSTEMS

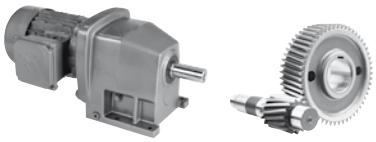

0.5 hp Gearmotors

Motor Power P_n [hp]	Output Speed n_2 [rpm]	Output Torque T_a [lb-in]	Service Factor f_B	AGMA Class	Gear Ratio i_{tot}	Standard Bearings F_{RN} OHL [lb]	Standard Bearings F_{AN} Thrust [lb]	Heavy Duty Bearings (VL) F_{RVL} OHL [lb]	Heavy Duty Bearings (VL) F_{AVL} Thrust [lb]	Model Type	Weight [lb]	Dim. Page
0.5	27	1178	2.6	III	64.80	1197	1260	1667	2403	SK 23 - 71L/4	73	182
	22	1419	2.1	III	78.05	1184	1260	1656	2516			
	19	1608	1.9	II	88.45	1170	1260	1647	2588			
	17	1829	1.6	II	100.60	1152	1260	1636	2655			
	14	2258	1.3	I	124.17	1112	1260	1607	2768			
	11	2753	0.9	*	151.44	1051	1260	1566	2813			
	9.6	3264	0.8	*	179.50	972	1260	1512	2909			
	24	1323	3.7	III	72.76	1537	2025	2126	3380	SK 32 - 71L/4	80	185
	21	1478	3.1	III	81.27	1535	2025	2124	3479			
	20	1603	3.0	III	88.18	1532	2025	2122	3535	SK 33N - 71L/4	100	188
	15	2040	2.4	III	112.18	1523	2025	2115	3740			
	13	2437	2.4	III	134.02	1512	2025	2106	3917			
	10	3027	2.0	III	166.49	1492	2025	2093	4122			
	8.3	3765	1.6	II	207.10	1458	2025	2068	4334			
	6.9	4512	1.3	I	248.17	1418	2025	2041	4482			
	5.1	6166	0.9	*	339.15	1292	2025	1955	4687			
	4.1	7660	0.8	*	421.32	1130	2025	1852	4894			
	9.4	3323	2.7	III	182.76	1847	2700	2572	3803	SK 43 - 71L/4	146	194
	7.8	3987	2.7	III	219.32	1825	2700	2556	3971			
	6.5	4799	2.3	III	263.93	1793	2700	2534	4127			
	5.8	5433	1.8	II	298.80	1764	2700	2513	4214			
	4.8	6538	1.7	II	359.59	1703	2700	2471	4374			
	4.1	7656	1.4	II	421.11	1629	2700	2419	4487			
	3.3	9606	0.9	*	528.37	1454	2700	2306	4604			
	2.8	11250	0.9	*	618.76	1253	2700	2185	4694			
	3.1	8930	1.2	I	550.73	1521	2700	2349	4761	SK 42/12 - 71L/4	148	233
	2.6	10878	1.0	I	670.81	1305	2700	2214	4860			
	2.3	12167	0.9	*	750.33	1107	2700	2104	4907			
	18	1586	9.3	III	97.80	3204	5344	4469	9000	SK 52/12 - 71L/4	212	233
	6.1	4591	3.5	III	283.13	3170	5344	4444	9000			
	4.9	5741	2.8	III	354.06	3146	5344	4428	9000			
	3.5	7966	2.0	III	491.28	3087	5344	4385	9000			
	3.2	8790	1.8	II	542.09	3060	5344	4367	9000			
	2.5	11179	1.4	II	689.41	2963	5344	4300	9000			
	1.9	14899	1.1	I	918.83	2759	5344	4160	9000			
	1.5	18556	0.9	*	1144.36	2475	5344	3978	9000			
	3.1	8958	3.2	III	552.45	4514	8672	6325	10125	SK 63/22 - 71L/4	340	234
	2.4	11796	2.4	III	727.45	4451	9306	6280	10125			
	2	13779	2.1	III	849.73	4394	9639	6239	10125			
	1.6	17254	1.6	II	1064.04	4271	10125	6154	10125	SK 63/23 - 71L/4	358	235
	1.2	22844	1.2	I	1408.77	4005	10125	5972	10125			
	1	27188	1.0	I	1676.63	3731	10125	5792	10125			
	1.9	14402	3.1	III	888.16	6246	9155	8944	11250	SK 73/22 - 71L/4	519	234
	1.6	17835	2.5	III	1099.84	6174	9623	8892	11250			
	1.4	20335	2.2	III	1254.07	6111	9920	8849	11250			

(AGMA Class I = f_B 1.0 - 1.39 II = f_B 1.4 - 1.99 III = f_B ≥ 2.0 * = f_B < 1.0)

Send Quote Requests to info@automatedpt.com
Call +1(800)985-6929 To Order or Order Online At Nordgearmotors.com

0.75 hp Gearmotors

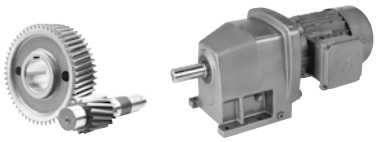

DRIVESYSTEMS

GEARMOTORS

Motor Power P_n [hp]	Output Speed n_2 [rpm]	Output Torque T_2 [lb-in]	Service Factor f_B	AGMA Class	Gear Ratio i_{tot}	Standard Bearings F_{RN} OHL [lb]	Standard Bearings F_{AN} Thrust [lb]	Heavy Duty Bearings (VL) F_{RVL} OHL [lb]	Heavy Duty Bearings (VL) F_{AVL} Thrust [lb]	Model Type	Weight [lb]	Dim. Page
0.75	1267	37	5.6	III	1.35		549			SK 11E - 80S/4	31	152
	1110	43	5.5	III	1.54		581					
	945	50	5.3	III	1.81		623					
	838	56	5.1	III	2.04		657					
	737	64	4.9	III	2.32		693					
	604	78	4.6	III	2.83		756					
	538	88	4.0	III	3.18		797					
	475	100	3.7	III	3.60		837					
	211	224	1.2	I	8.10		956					
	580	82	4.7	III	2.95	331	558	470	666	SK 02 - 80S/4	35	167
	506	94	4.5	III	3.38	344	590	488	693			
	440	108	4.3	III	3.89	358	619	511	722			
	405	117	3.9	III	4.22	369	646	524	743			
	355	133	3.8	III	4.82	383	671	542	767			
	307	154	3.3	III	5.57	401	713	569	803			
	280	169	3.0	III	6.10	412	736	587	830			
	248	191	2.8	III	6.89	425	736	605	855			
	219	216	2.6	III	7.80	441	736	626	880			
	209	227	2.5	III	8.19	448	736	635	896			
	184	257	2.2	III	9.28	464	736	657	927			
	172	275	2.1	III	9.95	475	736	673	947			
	152	312	1.9	II	11.27	491	736	698	977			
	133	355	1.7	II	12.82	506	736	718	1008			
	107	441	1.4	II	15.95	524	736	740	1069			
	83	570	1.1	I	20.59	511	736	731	1134			
	70	675	1.2	I	24.39	497	736	722	1148			
	58	820	1.0	I	29.61	475	736	707	1195			
	160	296	4.0	III	10.7	551	900	1145	1240	SK 12 - 80S/4	40	173
	128	371	3.6	III	13.39	585	900	1143	1307			
	102	463	2.9	III	16.73	623	900	1141	1386			
	91	520	2.7	III	18.79	644	900	1139	1427			
	80	589	2.5	III	21.28	666	900	1136	1472			
	66	717	1.7	II	25.92	686	900	1132	1517			
	55	863	1.7	II	31.19	720	900	1123	1582			
	45	1060	1.5	II	38.31	758	900	1112	1656			
	36	1325	1.2	I	47.87	709	900	1091	1735			
	69	684	3.2	III	24.73	1017	1260	1681	1834	SK 22 - 80S/4	60	179
	58	811	3.2	III	29.31	1069	1260	1679	1915			
	48	984	3.0	III	35.55	1130	1260	1674	2012			
	40	1185	2.5	III	42.82	1190	1260	1667	2104			
	37	1270	2.0	III	45.90	1193	1260	1663	2129			
	31	1530	1.9	II	55.28	1177	1260	1652	2223			
	24	1932	1.2	I	69.81	1143	1260	1629	2329			
	20	2389	0.9	*	86.30	1098	1260	1598	2435			
	17	2784	1.1	I	100.60	1046	1260	1562	2475	SK 23 - 80S/4	77	182
	14	3437	0.9	*	124.17	938	1260	1492	2547			
	30	1592	3.4	III	57.53	1532	2025	2122	3098	SK 32 - 80S/4	84	185
	27	1779	3.2	III	64.26	1528	2025	2120	3184			
	24	2014	2.5	III	72.76	1523	2025	2115	3278			
	21	2249	2.0	III	81.27	1517	2025	2111	3368			

(AGMA Class I = f_B 1.0 - 1.39 II = f_B 1.4 - 1.99 III = f_B ≥ 2.0 * = f_B < 1.0)

Send Quote Requests to info@automatedpt.com
Call +1(800)985-6929 To Order or Order Online At Nordgearmotors.com

NORD DRIVESYSTEMS

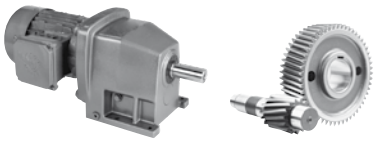

0.75 hp Gearmotors

Motor Power P_n [hp]	Output Speed n_2 [rpm]	Output Torque T_a [lb-in]	Service Factor f_B	AGMA Class	Gear Ratio i_{tot}	Standard Bearings F_{RN} OHL [lb]	Standard Bearings F_{AN} Thrust [lb]	Heavy Duty Bearings (VL) F_{RVL} OHL [lb]	Heavy Duty Bearings (VL) F_{AVL} Thrust [lb]	Model Type	Weight [lb]	Dim. Page
0.75	19	2441	1.9	II	88.18	1512	2025	2106	3395	SK 33N - 80S/4	104	188
	15	3105	1.6	II	112.18	1487	2025	2090	3575			
	13	3709	1.6	II	134.02	1460	2025	2070	3708			
	10	4608	1.3	I	166.49	1411	2025	2036	3886			
	8.3	5732	1.0	I	207.10	1330	2025	1980	4025			
	7.9	5540	1.0	I	215.56	1346	2025	1991	4077	SK 32/12 - 80S/4	114	233
	6.4	6883	0.8	*	267.79	1222	2025	1908	4244			
	21	2213	4.7	III	79.96	1872	2700	2590	3044	SK 43 - 80S/4	150	194
	18	2628	4.2	III	94.96	1863	2700	2583	3164			
	16	2976	3.3	III	107.51	1856	2700	2579	3245			
	13	3581	3.1	III	129.38	1838	2700	2565	3377			
	12	3918	2.4	III	141.55	1827	2700	2558	3411			
	10	4701	2.2	III	169.86	1798	2700	2536	3551			
	9.4	5058	1.8	II	182.76	1782	2700	2525	3566			
	8.4	5658	2.0	III	204.42	1753	2700	2504	3677			
	7.8	6070	1.7	II	219.32	1730	2700	2491	3695			
	7.4	6406	1.5	II	231.43	1712	2700	2477	3726			
	6.5	7305	1.5	II	263.93	1654	2700	2437	3803			
	6.1	7709	1.5	II	278.51	1625	2700	2417	3834			
	5.7	8270	1.2	I	298.80	1580	2700	2387	3841			
	4.8	9953	1.1	I	359.59	1418	2700	2282	3915			
	4.1	11656	0.9	*	421.11	1193	2700	2149	3992			
	9.6	4905	3.5	III	177.22	3164	5344	4439	9000	SK 53 - 80S/4	223	200
	9.2	5140	3.1	III	185.72	3159	5344	4437	9000			
	7.2	6538	2.6	III	236.21	3128	5344	4415	9000			
	7	6797	2.4	III	245.56	3121	5344	4410	9000			
	5.8	8145	2.4	III	294.26	3083	5344	4381	9000			
	4.6	10359	1.6	II	374.25	2999	5344	4325	9000			
	4.4	10855	1.5	II	392.20	2979	5344	4309	9000			
	3.4	13806	1.2	I	498.82	2826	5344	4205	9000			
	3.1	15192	1.1	I	548.89	2738	5344	4149	9000			
	2.8	16809	1.0	I	607.30	2621	5344	4073	9000			
	4.6	9466	3.0	III	368.29	4505	7592	6318	10125	SK 63/22 - 80S/4	344	234
	4	11056	2.6	III	430.19	4469	7875	6293	10125			
	3.1	14199	2.0	III	552.45	4381	8345	6230	10125			
	2.4	18696	1.5	II	727.45	4212	8840	6113	10125			
	2	21839	1.3	I	849.73	4061	9115	6010	10125			
	1.6	27347	1.0	I	1064.04	3719	9486	5785	10125	SK 63/23 - 80S/4	362	235
	1.2	36207	0.8	*	1408.77	2882	9891	5285	10125			
	3	14567	3.0	III	566.77	6244	7900	8942	11250	SK 73/22 - 80S/4	523	234
	2.3	18957	2.3	III	737.61	6147	8384	8874	11250			
	1.9	22827	1.9	II	888.16	6037	8712	8798	11250			
	1.6	28267	1.6	II	1099.84	5846	9068	8667	11250			
	1.4	32231	1.4	II	1254.07	5675	9275	8555	11250			
	1.9	23144	3.1	III	900.50	10040	14625	14096	14625	SK 83/32 - 80S/4	783	234
	1.5	29698	2.4	III	1155.49	9923	14625	14013	14625			
	1	43361	1.6	II	1687.12	9574	14625	13770	14625			

(AGMA Class I = f_B 1.0 - 1.39 II = f_B 1.4 - 1.99 III = f_B ≥ 2.0 * = f_B < 1.0)

Send Quote Requests to info@automatedpt.com
Call +1(800)985-6929 To Order or Order Online At Nordgearmotors.com

1.0 hp Gearmotors

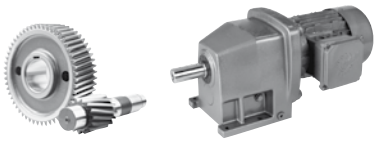

DRIVESYSTEMS

GEARMOTORS

Motor Power P_n [hp]	Output Speed n_2 [rpm]	Output Torque T_2 [lb-in]	Service Factor f_B	AGMA Class	Gear Ratio i_{tot}	Standard Bearings F_{RN} OHL [lb]	Standard Bearings F_{AN} Thrust [lb]	Heavy Duty Bearings (VL) F_{RVL} OHL [lb]	Heavy Duty Bearings (VL) F_{AVL} Thrust [lb]	Model Type	Weight [lb]	Dim. Page
1.0	1222	52	4.1	III	1.35		558			SK 11E - 80L/4	33	152
	1071	59	3.9	III	1.54		594			SK 11E - 80LH/4		
	912	70	3.8	III	1.81		632					
	809	78	3.7	III	2.04		666					
	711	89	3.5	III	2.32		704					
	583	109	3.3	III	2.83		767					
	519	122	2.9	III	3.18		806					
	458	138	2.7	III	3.60		851					
	204	311	0.9	*	8.10		956					
	559	113	3.4	III	2.95	329	551	466	659	SK 02 - 80L/4	37	167
	488	130	3.3	III	3.38	342	578	486	686	SK 02 - 80LH/4		
	424	149	3.1	III	3.89	356	608	504	713			
	391	162	2.8	III	4.22	365	632	520	734			
	342	185	2.7	III	4.82	378	655	533	754			
	296	214	2.4	III	5.57	396	695	560	790			
	270	234	2.2	III	6.10	410	725	578	815			
	239	265	2.0	III	6.89	419	736	592	833			
	212	300	1.9	II	7.80	432	736	612	860			
	201	315	1.8	II	8.19	441	736	623	873			
	178	357	1.6	II	9.28	452	736	639	900			
	166	382	1.5	II	9.95	464	736	655	918			
	146	433	1.4	II	11.27	477	736	673	945			
	129	493	1.3	I	12.82	491	736	693	968			
	103	613	1.0	I	15.95	506	736	727	1017			
	80	791	0.8	*	20.59	479	736	709	1069			
	68	937	0.8	*	24.39	252	736	691	1058			
	227	280	3.9	III	7.28	486	882	1145	1109	SK 12 - 80L/4	42	173
	210	302	3.7	III	7.85	495	900	1145	1130	SK 12 - 80LH/4		
	193	329	3.5	III	8.56	509	900	1143	1157			
	171	371	3.2	III	9.65	527	900	1143	1190			
	154	411	2.9	III	10.70	542	900	1141	1224			
	123	514	2.6	III	13.39	574	900	1139	1287			
	99	643	2.1	III	16.73	608	900	1134	1359			
	88	722	2.0	III	18.79	628	900	1132	1397			
	78	818	1.8	II	21.28	644	900	1127	1431			
	64	996	1.2	I	25.92	558	900	1116	1458			
	53	1198	1.2	I	31.19	482	900	1103	1517			
	43	1472	1.1	I	38.31	351	900	1078	1573			
	34	1839	0.9	*	47.87	155	900	1037	1629			
	67	950	2.3	III	24.73	997	1260	1674	1796	SK 22 - 80L/4	62	179
	56	1126	2.3	III	29.31	1046	1260	1670	1872	SK 22 - 80LH/4		
	46	1366	2.1	III	35.55	1105	1260	1658	1958			
	39	1645	1.8	II	42.82	1157	1260	1645	2039			
	36	1763	1.5	II	45.90	1159	1260	1638	2057			
	30	2124	1.3	I	55.28	1125	1260	1616	2135			
	25	2489	1.2	I	64.80	1053	1260	1589	2180	SK 23 - 80L/4	79	182
	21	2998	1.0	I	78.05	846	1260	1541	2248	SK 23 - 80LH/4		
	19	3398	0.9	*	88.45	599	1260	1496	2273			
	16	3865	0.8	*	100.6	299	1260	1436	2300			

(AGMA Class I = f_B 1.0 - 1.39 II = f_B 1.4 - 1.99 III = f_B ≥ 2.0 * = f_B < 1.0) **(Model Type in blue is an Energy Efficient motor)**

Send Quote Requests to info@automatedpt.com
Call +1(800)985-6929 To Order or Order Online At Nordgearmotors.com

NORD DRIVESYSTEMS

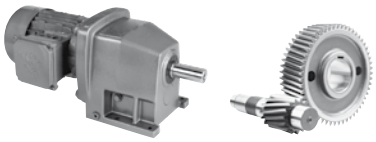

1.0 hp Gearmotors

Motor Power P_n [hp]	Output Speed n_2 [rpm]	Output Torque T_a [lb-in]	Service Factor f_B	AGMA Class	Gear Ratio i_{tot}	Standard Bearings F_{RN} OHL [lb]	Standard Bearings F_{AN} Thrust [lb]	Heavy Duty Bearings (VL) F_{RVL} OHL [lb]	Heavy Duty Bearings (VL) F_{AVL} Thrust [lb]	Model Type	Weight [lb]	Dim. Page
1.0	43	1489	2.7	III	38.76	1359	2025	2124	2752	**SK 32 - 80L/4**	86	185
	36	1779	2.7	III	46.31	1429	2025	2120	2878	**SK 32 - 80LH/4**		
	29	2210	2.5	III	57.53	1519	2025	2111	3040			
	26	2469	2.3	III	64.26	1510	2025	2106	3119			
	23	2795	1.8	II	72.76	1499	2025	2097	3195			
	20	3122	1.5	II	81.27	1487	2025	2088	3272			
	19	3388	1.4	II	88.18	1476	2025	2081	3278	**SK 33N - 80L/4**	106	188
	15	4310	1.1	I	112.18	1429	2025	2048	3411	**SK 33N - 80LH/4**		
	12	5149	1.1	I	134.02	1375	2025	2012	3524			
	9.9	6396	0.9	*	166.49	1271	2025	1942	3661			
	24	2694	3.6	III	70.12	1863	2700	2583	2882	**SK 43 - 80L/4**	152	194
	21	3072	3.4	III	79.96	1854	2700	2576	2972	**SK 43 - 80LH/4**		
	17	3648	3.0	III	94.96	1836	2700	2563	3069			
	15	4130	2.4	III	107.51	1820	2700	2552	3128			
	13	4970	2.2	III	129.38	1787	2700	2529	3236			
	12	5438	1.7	II	141.55	1764	2700	2513	3240			
	9.7	6526	1.6	II	169.86	1706	2700	2471	3346			
	9	7021	1.3	I	182.76	1674	2700	2450	3339			
	8.1	7853	1.5	II	204.42	1613	2700	2410	3427			
	7.5	8426	1.3	I	219.32	1566	2700	2378	3427			
	7.1	8891	1.1	I	231.43	1526	2700	2351	3438			
	6.3	10139	1.1	I	263.93	1395	2700	2268	3483			
	5.9	10700	1.1	I	278.51	1328	2700	2228	3483			
	5.5	11479	0.9	*	298.80	1220	2700	2165	3461			
	4.6	13814	0.8	*	359.59	738	2700	1935	3461			
	12	5353	3.3	III	139.34	3155	5344	4433	9000	**SK 53 - 80L/4**	225	200
	9.3	6808	2.5	III	177.22	3121	5344	4410	9000	**SK 53 - 80LH/4**		
	8.9	7135	2.3	III	185.72	3112	5344	4403	9000			
	7	9074	1.9	II	236.21	3051	5344	4361	9000			
	6.7	9434	1.7	II	245.56	3038	5344	4349	9000			
	5.6	11305	1.7	II	294.26	2959	5344	4295	9000			
	4.4	14378	1.2	I	374.25	2792	5344	4183	9000			
	4.2	15067	1.1	I	392.20	2747	5344	4154	9000			
	3.3	19163	0.9	*	498.82	2419	5344	3944	9000			
	3	21087	0.8	*	548.89	2216	5344	3823	9000			
	7.3	8182	3.5	III	224.97	4529	6624	6336	10125	**SK 63/22 - 80L/4**	346	234
	5.8	10282	2.8	III	282.73	4487	6995	6305	10125	**SK 63/22 - 80LH/4**		
	4.5	13394	2.1	III	368.29	4406	7434	6248	10125			
	3.8	15645	1.8	II	430.19	4331	7666	6197	10125			
	3	20092	1.4	II	552.45	4149	8042	6068	10125			
	2.3	26456	1.1	I	727.45	3782	8424	5825	10125			
	1.9	30903	0.9	*	849.73	3434	8615	5605	10125			
	3.6	16645	2.7	III	457.68	6201	7340	8912	11250	**SK 73/22 - 80L/4**	525	234
	2.9	20612	2.1	III	566.77	6102	7664	8843	11250	**SK 73/22 - 80 LH/4**		
	2.2	26826	1.6	II	737.61	5902	8042	8705	11250			
	1.9	32301	1.4	II	888.16	5672	8289	8552	11250			
	1.5	39999	1.1	I	1099.84	5254	8532	8280	11250			
	1.3	45608	1.0	I	1254.07	4865	8656	8039	11250			
	2.3	26357	2.7	III	724.73	9986	14468	14058	14625	**SK 83/32 - 80L/4**	785	234
	1.8	32750	2.2	III	900.50	9855	14625	13966	14625	**SK 83/32 - 80LH/4**		
	1.4	42023	1.7	II	1155.49	9614	14625	13797	14625			

(AGMA Class I = f_B 1.0 - 1.39 II = f_B 1.4 - 1.99 III = f_B ≥ 2.0 * = f_B < 1.0) **(Model Type in blue is an Energy Efficient motor)**

Send Quote Requests to info@automatedpt.com
Call +1(800)985-6929 To Order or Order Online At Nordgearmotors.com

1.5 hp Gearmotors

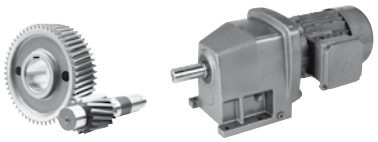

DRIVESYSTEMS

GEARMOTORS

Motor Power P_n [hp]	Output Speed n_2 [rpm]	Output Torque T_2 [lb-in]	Service Factor f_B	AGMA Class	Gear Ratio i_{tot}	Standard Bearings F_{RN} OHL [lb]	Standard Bearings F_{AN} Thrust [lb]	Heavy Duty Bearings (VL) F_{RVL} OHL [lb]	Heavy Duty Bearings (VL) F_{AVL} Thrust [lb]	Model Type	Weight [lb]	Dim. Page
1.5	1230	77	4.3	III	1.35		560			SK 11E - 90S/4	40	152
	1078	88	4.1	III	1.54		594			SK 11E - 90SH/4		
	917	103	3.9	III	1.81		635					
	814	116	3.8	III	2.04		666					
	716	132	3.2	III	2.32		704					
	587	161	3.0	III	2.83		765					
	522	181	2.0	III	3.18		806					
	461	205	1.8	II	3.60		846					
	563	168	2.4	III	2.95	317	522	450	635	SK 02 - 90S/4	44	167
	491	193	2.3	III	3.38	329	542	466	655	SK 02 - 90 SH/4		
	427	222	2.1	III	3.89	340	567	482	677			
	393	241	1.9	II	4.22	351	590	497	700			
	344	275	1.8	II	4.82	360	608	506	711			
	298	318	1.6	II	5.57	376	641	531	745			
	272	348	1.5	II	6.10	389	668	549	770			
	241	393	1.4	II	6.89	394	680	556	776			
	213	445	1.3	I	7.80	405	700	569	797			
	203	467	1.2	I	8.19	412	716	581	808			
	179	529	1.1	I	9.28	401	736	594	826			
	167	567	1.0	I	9.95	401	736	605	842			
	147	643	0.9	*	11.27	349	736	619	857			
	129	731	0.8	*	12.82	277	736	630	873			
	417	227	3.9	III	3.98	392	659	1145	916	SK 12 - 90S/4	49	173
	384	246	4.0	III	4.32	403	686	1145	941	SK 12 - 90SH/4		
	370	256	3.8	III	4.49	405	686	1145	943			
	337	281	3.7	III	4.93	419	720	1145	970			
	287	330	3.3	III	5.79	437	756	1143	1010			
	254	372	3.0	III	6.53	450	785	1143	1040			
	228	415	2.6	III	7.28	466	821	1141	1073			
	211	448	2.6	III	7.85	475	837	1141	1087			
	194	488	2.4	III	8.56	486	864	1139	1114			
	172	550	2.2	III	9.65	502	893	1139	1143			
	155	610	1.9	II	10.70	515	900	1136	1175			
	124	764	1.7	II	13.39	538	900	1130	1224			
	99	954	1.4	II	16.73	495	900	1118	1280			
	88	1071	1.3	I	18.79	423	900	1112	1305			
	78	1213	1.2	I	21.28	335	900	1100	1332			
	152	621	3.8	III	10.89	774	1260	1683	1436	SK 22 - 90S/4	64	179
	136	696	3.7	III	12.20	799	1260	1681	1476	SK 22 - 90SH/4		
	113	838	3.6	III	14.69	842	1260	1676	1544			
	99	955	3.1	III	16.75	873	1260	1674	1591			
	83	1142	2.2	III	20.03	896	1260	1667	1629			
	70	1354	2.1	III	23.74	938	1260	1661	1692			
	67	1410	1.5	II	24.73	941	1260	1656	1694			
	58	1642	2.0	III	28.80	983	1260	1645	1762			
	57	1671	1.5	II	29.31	981	1260	1645	1755			
	48	1978	1.5	II	34.69	950	1260	1627	1827			
	47	2027	1.4	II	35.55	862	1260	1622	1823			
	39	2442	1.2	I	42.82	698	1260	1593	1881			
	36	2617	1.0	I	45.90	515	1260	1577	1881			
	30	3152	0.9	*	55.28	250	1260	1526	1931			

(AGMA Class I = f_B 1.0 - 1.39 II = f_B 1.4 - 1.99 III = f_B ≥ 2.0 * = f_B < 1.0) **(Model Type in blue is an Energy Efficient motor)**

Send Quote Requests to info@automatedpt.com
Call +1(800)985-6929 To Order or Order Online At Nordgearmotors.com

DRIVESYSTEMS

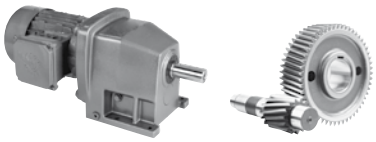

1.5 hp Gearmotors

Motor Power P_n [hp]	Output Speed n_2 [rpm]	Output Torque T_a [lb-in]	Service Factor f_B	AGMA Class	Gear Ratio i_{tot}	Standard Bearings F_{RN} OHL [lb]	Standard Bearings F_{AN} Thrust [lb]	Heavy Duty Bearings (VL) F_{RVL} OHL [lb]	Heavy Duty Bearings (VL) F_{AVL} Thrust [lb]	Model Type	Weight [lb]	Dim. Page
1.5	62	1515	2.5	III	26.57	1172	2025	2122	2412	**SK 32 - 90S/4**	93	185
	53	1777	2.6	III	31.16	1226	2025	2120	2509	**SK 32 - 90SH/4**		
	50	1885	1.8	II	33.05	1235	2025	2117	2531			
	45	2123	2.5	III	37.23	1283	2025	2113	2615			
	43	2210	1.8	II	38.76	1292	2025	2111	2628			
	36	2637	2.3	III	46.25	1361	2025	2102	2752			
	36	2641	1.8	II	46.31	1348	2025	2102	2734			
	29	3281	1.7	II	57.53	1422	2025	2084	2864			
	26	3664	1.5	II	64.26	1456	2025	2072	2930			
	23	4149	1.2	I	72.76	1438	2025	2054	2977			
	20	4634	1.0	I	81.27	1409	2025	2034	3035			
	19	5028	0.9	*	88.18	1384	2025	2016	2993	**SK 33N - 90S/4**	112	188
	15	6397	0.8	*	112.18	1271	2025	1942	3049	**SK 33N - 90SH/4**		
	12	7642	0.8	*	134.02	1033	2025	1852	3110			
	27	3459	2.6	III	60.66	1843	2700	2567	2646	**SK 42 - 90S/4**	126	191
	22	4269	2.2	III	74.87	1816	2700	2549	2761	**SK 42 - 90SH/4**		
	20	4853	1.5	II	85.10	1791	2700	2531	2795			
	16	5992	1.3	I	105.08	1735	2700	2493	2896			
	17	5415	2	III	94.96	1766	2700	2513	2826	**SK 43 - 90S/4**	159	194
	15	6131	1.6	II	107.51	1728	2700	2486	2855	**SK 43 - 90SH/4**		
	13	7378	1.5	II	129.38	1649	2700	2432	2914			
	12	8072	1.2	I	141.55	1595	2700	2399	2864			
	9.8	9686	1.1	I	169.86	1447	2700	2300	2914			
	9.1	10422	0.9	*	182.76	1361	2700	2248	2855			
	8.1	11657	1.0	I	204.42	1193	2700	2149	2914			
	7.6	12506	0.8	*	219.32	844	2700	2072	2869			
	23	4071	3.5	III	71.39	3177	5344	4451	9000	**SK 52 - 90S/4**	190	197
	21	4480	3.2	III	78.56	3170	5344	4446	9000	**SK 52 - 90SH/4**		
	19	4957	3.1	III	86.92	3164	5344	4439	9000			
	17	5445	3.6	III	95.49	3152	5344	4433	9000	**SK 53 - 90S/4**	232	200
	16	6037	3.3	III	105.87	3139	5344	4424	9000	**SK 53 - 90SH/4**		
	12	7946	2.5	III	139.34	3087	5344	4385	9000			
	9.4	10106	1.7	II	177.22	3011	5344	4331	9000			
	8.9	10590	1.5	II	185.72	2990	5344	4318	9000			
	7	13470	1.3	I	236.21	2846	5344	4219	9000			
	6.8	14003	1.2	I	245.56	2815	5344	4199	9000			
	5.6	16780	1.2	I	294.26	2624	5344	4073	9000			
	4.4	21341	0.8	*	374.25	2187	5344	3805	9000			
	31	3069	4.9	III	53.82	4590	4451	6379	9153	**SK 63 - 90S/4**	311	206
	26	3585	4.8	III	62.87	4588	4640	6377	9558	**SK 63 - 90SH/4**		
	21	4417	4.6	III	77.46	4581	4907	6372	10125			
	19	4964	4.1	III	87.06	4574	5060	6368	10125			
	15	6152	4.1	III	107.89	4561	5326	6359	10125			
	7.8	12209	2.6	III	214.10	4439	6233	6271	10125			
	6.3	15130	2.1	III	265.32	4349	6518	6208	10125			
	5.5	17127	1.7	II	300.34	4277	6656	6158	10125			
	4.5	21225	1.3	I	372.21	4093	6905	6030	10125			

(AGMA Class I = f_B 1.0 - 1.39 II = f_B 1.4 - 1.99 III = f_B ≥ 2.0 * = f_B < 1.0) **(Model Type in blue is an Energy Efficient motor)**

Send Quote Requests to info@automatedpt.com
Call +1(800)985-6929 To Order or Order Online At Nordgearmotors.com

1.5 hp, 2.0 hp Gearmotors

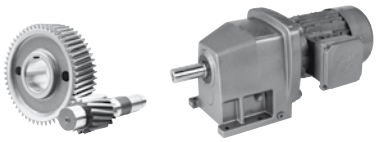

DRIVESYSTEMS

GEARMOTORS

Motor Power P_n [hp]	Output Speed n_2 [rpm]	Output Torque T_2 [lb-in]	Service Factor f_B	AGMA Class	Gear Ratio i_{tot}	Standard Bearings F_{RN} OHL [lb]	Standard Bearings F_{AN} Thrust [lb]	Heavy Duty Bearings (VL) F_{RVL} OHL [lb]	Heavy Duty Bearings (VL) F_{AVL} Thrust [lb]	Model Type	Weight [lb]	Dim. Page
1.5	3.9	24531	1.2	I	430.19	3906	7074	5906	10125	**SK 63/22 - 90S/4**	353	234
	3	31503	0.9	*	552.45	3380	7270	5573	10125	SK 63/22 - 90SH/4		
	5.9	15928	2.8	III	279.33	6217	6221	8921	11250	**SK 73/22 - 90S/4**	531	234
	4.8	19725	2.2	III	345.90	6127	6487	8861	11250	SK 73/22 - 90SH/4		
	3.6	26099	1.7	II	457.68	5929	6818	8723	11250			
	2.9	32319	1.4	II	566.77	5670	7004	8550	11250			
	2.3	42061	1.1	I	737.61	5121	7187	8197	11250			
	1.9	50646	0.9	*	888.16	4439	7256	7790	11250			
	3.8	24967	2.8	III	437.84	10010	12285	14076	14625	**SK 83/42 - 90S/4**	825	234
	3.2	29960	2.4	III	525.40	9916	12809	14009	14625	SK 83/42 - 90SH/4		
	2.3	41327	1.7	II	724.73	9635	13680	13813	14625	**SK 83/32 - 90S/4**	792	234
	1.8	51350	1.4	II	900.50	9302	14238	13581	14625	SK 83/32 - 90SH/4		
	1.4	65890	1.1	I	1155.49	8658	14625	13149	14625			
	1.2	78044	0.9	*	1368.62	7945	14625	12690	14625			
	2.2	43157	2.5	III	756.82	14735	18000	20826	18000	**SK 93/42 - 90S/4**	1219	234
	2	46387	2.3	III	813.46	14690	18000	20795	18000	SK 93/42 - 90SH/4		
	1.5	62240	1.7	II	1091.47	14418	18000	20601	18000			
	1.3	74048	1.5	II	1298.54	14159	18000	20421	18000			
	1.8	53806	3.3	III	943.57	22815	27000	27000	27000	**SK 103/52 - 90S/4**	1766	235
	1.4	65498	2.7	III	1148.61	22703	27000	27000	27000	SK 103/52 - 90SH/4		
	1.2	80559	2.2	III	1412.72	22525	27000	27000	27000			
2.0	1230	103	3.2	III	1.35		563			**SK 11E - 90L/4**	44	152
	1078	117	3.1	III	1.54		594			SK 11E - 90LH/4		
	917	137	3.0	III	1.81		637					
	814	155	2.8	III	2.04		671					
	716	176	2.4	III	2.32		704					
	587	215	2.2	III	2.83		767					
	522	241	1.5	II	3.18		806					
	461	273	1.4	II	3.60		846					
	563	224	1.8	II	2.95	306	491	434	608	**SK 02 - 90L/4**	49	167
	491	256	1.8	II	3.38	317	511	446	628	SK 02 - 90LH/4		
	427	295	1.6	II	3.89	326	529	459	644			
	393	320	1.4	II	4.22	338	554	475	666			
	344	366	1.4	II	4.82	340	556	482	671			
	298	423	1.2	I	5.57	347	590	502	700			
	272	463	1.1	I	6.10	367	614	520	722			
	241	523	1.0	I	6.89	270	612	520	722			
	213	592	0.9	*	7.80	209	626	529	734			
	203	621	0.9	*	8.19	216	639	538	745			
	179	704	0.8	*	9.28	142	650	547	756			
	167	755	0.8	*	9.95	135	666	558	770			

(AGMA Class I = f_B 1.0 - 1.39 II = f_B 1.4 - 1.99 III = f_B ≥ 2.0 * = f_B < 1.0) **(Model Type in blue is an Energy Efficient motor)**

Send Quote Requests to info@automatedpt.com
Call +1(800)985-6929 To Order or Order Online At Nordgearmotors.com

DRIVESYSTEMS

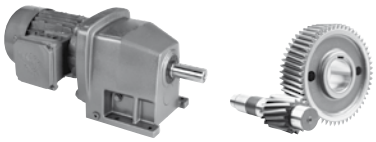

2.0 hp Gearmotors

Motor Power P_n [hp]	Output Speed n_2 [rpm]	Output Torque T_a [lb-in]	Service Factor f_B	AGMA Class	Gear Ratio i_{tot}	Standard Bearings F_{RN} OHL [lb]	Standard Bearings F_{AN} Thrust [lb]	Heavy Duty Bearings (VL) F_{RVL} OHL [lb]	Heavy Duty Bearings (VL) F_{AVL} Thrust [lb]	Model Type	Weight [lb]	Dim. Page
2.0	370	341	2.8	III	4.49	392	650	1143	920	**SK 12 - 90L/4**	53	173
	337	374	2.7	III	4.93	405	677	1143	945	SK 12 - 90LH/4		
	287	439	2.5	III	5.79	421	713	1141	981			
	254	495	2.3	III	6.53	432	734	1139	1006			
	228	552	2.0	III	7.28	448	767	1139	1040			
	211	596	1.9	II	7.85	452	774	1136	1051			
	194	649	1.8	II	8.56	464	799	1134	1073			
	172	732	1.6	II	9.65	448	821	1130	1096			
	155	812	1.5	II	10.70	437	846	1127	1125			
	124	1016	1.3	I	13.39	270	873	1114	1159			
	99	1269	1.1	I	16.73	137	900	1096	1204			
	88	1425	1.0	I	18.79	20	900	1082	1220			
	78	1614	0.9	*	21.28			1064	1238			
	242	520	3.1	III	6.86	664	1114	1685	1251	**SK 22 - 90L/4**	73	179
	219	574	2.9	III	7.57	677	1150	1683	1276	SK 22 - 90LH/4		
	196	643	2.8	III	8.48	700	1186	1683	1312			
	152	826	2.9	III	10.89	754	1260	1679	1395			
	136	926	2.8	III	12.20	774	1260	1674	1429			
	113	1114	2.7	III	14.69	812	1260	1670	1490			
	99	1271	2.4	III	16.75	837	1260	1663	1530			
	83	1520	1.7	II	20.03	754	1260	1652	1548			
	70	1801	1.6	II	23.74	662	1260	1636	1600			
	67	1876	1.2	I	24.73	536	1260	1631	1595			
	58	2185	1.5	II	28.80	502	1260	1611	1656			
	57	2224	1.2	I	29.31	383	1260	1609	1640			
	48	2632	1.1	I	34.69	288	1260	1575	1697			
	47	2697	1.1	I	35.55	155	1260	1571	1690			
	39	3248	0.9	*	42.82			1514	1726			
	89	1416	3.0	III	18.67	1051	2025	2124	2187	**SK 32 - 90L/4**	97	185
	80	1570	2.9	III	20.70	1078	2025	2122	2239	SK 32 - 90LH/4		
	72	1754	2.9	III	23.12	1109	2025	2120	2300			
	62	2016	1.9	II	26.57	1123	2025	2115	2327			
	53	2364	1.9	II	31.16	1170	2025	2108	2410			
	50	2507	1.3	I	33.05	1175	2025	2104	2428			
	45	2824	1.8	II	37.23	1220	2025	2097	2504			
	43	2940	1.3	I	38.76	1220	2025	2095	2504			
	36	3509	1.7	II	46.25	1280	2025	2077	2615			
	36	3513	1.3	I	46.31	1267	2025	2077	2590			
	29	4364	1.2	I	57.53	1330	2025	2045	2696			
	26	4875	1.2	I	64.26	1352	2025	2023	2743			
	54	2311	3.1	III	30.46	1631	2700	2588	2225	**SK 42 - 90L/4**	130	191
	27	4602	1.9	II	60.66	1802	2700	2540	2502	SK 42 - 90LH/4		
	22	5680	1.7	II	74.87	1753	2700	2504	2581			
	20	6456	1.1	I	85.10	1710	2700	2475	2588			
	16	7972	1.0	I	105.08	1604	2700	2403	2644			

(AGMA Class I = f_B 1.0 - 1.39 II = f_B 1.4 - 1.99 III = f_B ≥ 2.0 * = f_B < 1.0) **(Model Type in blue is an Energy Efficient motor)**

Send Quote Requests to info@automatedpt.com
Call +1(800)985-6929 To Order or Order Online At Nordgearmotors.com

2.0 hp Gearmotors

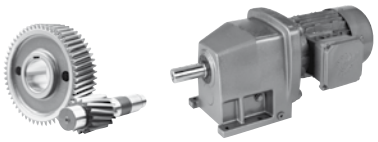

DRIVESYSTEMS

GEARMOTORS

Motor Power P_n [hp]	Output Speed n_2 [rpm]	Output Torque T_2 [lb-in]	Service Factor f_B	AGMA Class	Gear Ratio i_{tot}	Standard Bearings F_{RN} OHL [lb]	Standard Bearings F_{AN} Thrust [lb]	Heavy Duty Bearings (VL) F_{RVL} OHL [lb]	Heavy Duty Bearings (VL) F_{AVL} Thrust [lb]	Model Type	Weight [lb]	Dim. Page
2.0	41	3109	2.8	III	40.98	1748	2700	2576	2340	**SK 43 - 90L/4**	163	194
	34	3684	2.5	III	48.56	1802	2700	2563	2381	SK 43 - 90LH/4		
	28	4420	2.3	III	58.27	1809	2700	2545	2464			
	24	5319	2.1	III	70.12	1771	2700	2518	2527			
	21	6066	1.8	II	79.96	1733	2700	2491	2561			
	17	7204	1.5	II	94.96	1661	2700	2441	2588			
	15	8156	1.2	I	107.51	1589	2700	2392	2581			
	13	9815	1.1	I	129.38	1229	2700	2291	2585			
	12	10738	0.9	*	141.55	529	2700	2225	2491			
	9.8	12886	0.8	*	169.86			2034	2480			
	23	5416	2.6	III	71.39	3155	5344	4433	9000	**SK 52 - 90L/4**	194	197
	21	5960	2.4	III	78.56	3141	5344	4424	9000	SK 52 - 90LH/4		
	19	6594	2.3	III	86.92	3125	5344	4412	9000			
	16	8032	2.5	III	105.87	3085	5344	4385	9000	**SK 53 - 90L/4**	236	200
	12	10571	1.9	II	139.34	2990	5344	4318	9000	SK 53 - 90LH/4		
	9.4	13444	1.3	I	177.22	2849	5344	4221	9000			
	8.9	14089	1.1	I	185.72	2810	5344	4194	9000			
	7	17919	0.9	*	236.21	2531	5344	4014	9000			
	6.8	18629	0.9	*	245.56	2468	5344	3976	9000			
	5.6	22323	0.9	*	294.26	2066	5344	3737	9000			
	7.8	16242	2.0	III	214.10	4311	5969	6181	10125	**SK 63 - 90L/4**	315	206
	6.3	20128	1.6	II	265.32	4147	6172	6068	10125	SK 63 - 90LH/4		
	5.5	22784	1.2	I	300.34	4010	6282	5974	10125			
	4.5	28237	1.0	I	372.21	3652	6435	5742	10125			
	11	11630	2.4	III	153.31	4455	5598	6282	10125	**SK 63/22 - 90L/4**	357	234
	9.6	13113	2.2	III	172.85	4415	5733	6253	10125	SK 63/22 - 90LH/4		
	7.4	17067	1.7	II	224.97	4280	6017	6158	10125			
	5.9	21448	1.3	I	282.73	4082	6233	6023	10125			
	4.5	27939	1.0	I	368.29	3674	6426	5756	10125			
	3.9	32635	0.9	*	430.19	3274	6518	5508	10125			
	7.3	17200	2.6	III	226.73	6188	5733	8903	11250	**SK 73/32 - 90L/4**	560	234
										SK 73/32 - 90LH/4		
	5.9	21191	2.1	III	279.33	6086	5938	8831	11250	**SK 73/22 - 90L/4**	536	234
	4.8	26241	1.7	II	345.90	5922	6122	8721	11250	SK 73/22 - 90LH/4		
	3.6	34721	1.3	I	457.68	5553	6323	8474	11250			
	2.9	42996	1.0	I	566.77	5056	6415	8156	11250			
	2.3	55957	0.8	*	737.61	3881	6415	7484	11250			
	4.4	28448	2.5	III	374.99	9947	11504	14031	14625	**SK 83/42 - 90L/4**	829	234
	3.8	33215	2.1	III	437.84	9846	11880	13959	14625	SK 83/42 - 90LH/4		
	3.2	39858	1.8	II	525.40	9677	12305	13842	14625			
	2.3	54980	1.3	I	724.73	9160	12996	13484	14625	**SK 83/32 - 90L/4**	796	234
	1.8	68314	1.0	I	900.50	8530	13397	13066	14625	SK 83/32 - 90LH/4		
	1.4	87658	0.8	*	1155.49	7234	13723	12258	14625			
	3	41630	2.6	III	548.76	14756	18000	20840	18000	**SK 93/42 - 90L/4**	1224	234
	2.2	57414	1.9	II	756.82	14510	18000	20666	18000	SK 93/42 - 90LH/4		
	2	61711	1.7	II	813.46	14429	18000	20610	18000			
	1.5	82801	1.3	I	1091.47	13934	18000	20266	18000			
	1.3	98510	1.1	I	1298.54	13455	18000	19940	18000			
	1.8	71581	2.5	III	943.57	22637	27000	27000	27000	**SK 103/52 - 90L/4**	1771	235
	1.4	87136	2.0	III	1148.61	22435	27000	27000	27000	SK 103/52 - 90LH/4		
	1.2	107172	1.7	II	1412.72	22115	27000	27000	27000			

(AGMA Class I = f_B 1.0 - 1.39 II = f_B 1.4 - 1.99 III = f_B ≥ 2.0 * = f_B < 1.0) **(Model Type in blue is an Energy Efficient motor)**

Send Quote Requests to info@automatedpt.com
Call +1(800)985-6929 To Order or Order Online At Nordgearmotors.com

DRIVESYSTEMS

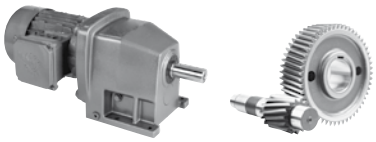

3.0 hp Gearmotors

Motor Power P_n [hp]	Output Speed n_2 [rpm]	Output Torque T_a [lb-in]	Service Factor f_B	AGMA Class	Gear Ratio i_{tot}	Standard Bearings F_{RN} OHL [lb]	Standard Bearings F_{AN} Thrust [lb]	Heavy Duty Bearings (VL) F_{RVL} OHL [lb]	Heavy Duty Bearings (VL) F_{AVL} Thrust [lb]	Model Type	Weight [lb]	Dim. Page
3.0	1263	150	3	III	1.35		560			SK 11E - 100L/4 SK 11E - 100LH/4	53	152
	1107	171	2.6	III	1.54		592					
	942	201	2.4	III	1.81		632					
	836	227	2.3	III	2.04		664					
	735	258	1.6	II	2.32		700					
	602	314	1.5	II	2.83		761					
	705	269	2.4	III	2.42		909			SK 21E - 100L/4 SK 21E - 100LH/4	66	155
	629	301	2.3	III	2.71		956					
	552	343	1.6	II	3.09		1006					
	465	408	1.5	II	3.67		1080					
	266	711	0.8	*	6.40		1283					
	576	329	2.8	III	2.96	331	520	1143	794	SK 12 - 100L/4 SK 12 - 100LH/4	62	173
	503	376	2.6	III	3.39	342	536	1143	817			
	428	442	2.3	III	3.98	353	558	1141	844			
	395	480	2.1	III	4.32	365	581	1141	869			
	380	499	2.1	III	4.49	317	569	1139	866			
	346	547	1.9	II	4.93	342	599	1139	893			
	294	643	1.7	II	5.79	279	617	1134	916			
	261	725	1.5	II	6.53	223	626	1132	934			
	234	808	1.4	II	7.28	234	657	1127	965			
	217	872	1.3	I	7.85	149	650	1123	970			
	199	950	1.2	I	8.56	131	671	1118	990			
	177	1072	1.1	I	9.65	36	673	1112	1001			
	159	1188	1.0	I	10.70			1103	1024			
	127	1487	0.9	*	13.39			1078	1031			
	369	513	2.6	III	4.62	558	882	1685	1073	SK 22 - 100L/4 SK 22 - 100LH/4	82	179
	329	575	2.4	III	5.18	576	911	1683	1098			
	294	643	3	III	5.79	601	968	1683	1143			
	262	723	2.8	III	6.51	619	997	1681	1172			
	249	762	3.0	III	6.86	630	1019	1679	1190			
	225	841	2.6	III	7.57	639	1037	1676	1208			
	201	942	2.4	III	8.48	657	1071	1674	1233			
	157	1209	2.3	III	10.89	700	1161	1665	1307			
	140	1355	2.1	III	12.20	653	1184	1658	1330			
	116	1631	1.8	II	14.69	545	1240	1647	1379			
	102	1860	1.6	II	16.75	416	1260	1634	1400			
	85	2224	1.1	I	20.03			1609	1379			
	72	2636	1.1	I	23.74			1575	1409			
	59	3198	1.0	I	28.80			1519	1436			
	49	3852	0.8	*	34.69			1438	1445			
	117	1616	3.1	III	14.55	932	1811	2122	1964	SK 32 - 100L/4 SK 32 - 100LH/4	106	185
	113	1669	2.7	III	15.03	932	1811	2122	1964			
	105	1804	3.1	III	16.25	959	1870	2120	2014			
	102	1850	2.5	III	16.66	952	1856	2117	2007			
	91	2073	2.7	III	18.67	983	1933	2113	2066			
	82	2298	2.5	III	20.70	1004	1985	2108	2106			
	74	2567	2.2	III	23.12	1028	2025	2104	2153			
	64	2950	1.3	I	26.57	1019	2005	2095	2142			
	55	3460	1.3	I	31.16	1053	2025	2079	2205			
	46	4134	1.3	I	37.23	1082	2025	2054	2266			
	37	5135	1.2	I	46.25	983	2025	2012	2338			

(AGMA Class I = f_B 1.0 - 1.39 II = f_B 1.4 - 1.99 III = f_B ≥ 2.0 * = f_B < 1.0) **(Model Type in blue is an Energy Efficient motor)**

Send Quote Requests to info@automatedpt.com
Call +1(800)985-6929 To Order or Order Online At Nordgearmotors.com

3.0 hp Gearmotors

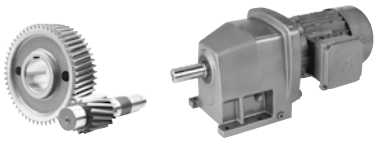

DRIVESYSTEMS

GEARMOTORS

Motor Power P_n [hp]	Output Speed n_2 [rpm]	Output Torque T_2 [lb-in]	Service Factor f_B	AGMA Class	Gear Ratio i_{tot}	Standard Bearings F_{RN} OHL [lb]	Standard Bearings F_{AN} Thrust [lb]	Heavy Duty Bearings (VL) F_{RVL} OHL [lb]	Heavy Duty Bearings (VL) F_{AVL} Thrust [lb]	Model Type	Weight [lb]	Dim. Page
3.0	78	2428	3.4	III	21.87	1420	2700	2588	1955	**SK 42 - 100L/4**	139	191
	70	2710	2.8	III	24.41	1436	2700	2583	1962	SK 42 - 100LH/4		
	69	2739	2.9	III	24.67	1458	2700	2581	1989			
	58	3252	2.8	III	29.29	1505	2700	2572	2027			
	56	3382	2.8	III	30.46	1537	2700	2570	2070			
	48	3914	2.8	III	35.25	1568	2700	2558	2090			
	41	4585	2.3	III	41.29	1625	2700	2540	2142			
	33	5661	1.7	II	50.98	1692	2700	2504	2198			
	28	6736	1.3	I	60.66	1530	2700	2462	2198			
	23	8313	1.1	I	74.87	1127	2700	2385	2219			
	42	4550	2.0	III	40.98	1616	2700	2540	2129	**SK 43 - 100L/4**	172	194
	21	8879	1.2	I	79.96	691	2700	2351	2160	SK 43 - 100LH/4		
	18	10544	1.0	I	94.96	11	2700	2239	2115			
	16	11938	0.8	*	107.51			2124	2041			
	13	14366	0.8	*	129.38			1870	1951			
	44	4269	3.5	III	38.45	3175	5344	4448	8786	**SK 52 - 100L/4**	203	197
	35	5430	3.1	III	48.90	3152	5344	4433	9000	SK 52 - 100LH/4		
	32	5975	2.8	III	53.81	3141	5344	4424	9000			
	29	6611	2.5	III	59.54	3125	5344	4412	9000			
	24	7927	1.8	II	71.39	3089	5344	4388	9000			
	22	8723	1.6	II	78.56	3062	5344	4367	9000			
	20	9651	1.6	II	86.92	3029	5344	4345	9000			
	18	10603	1.9	II	95.49	2990	5344	4318	9000	**SK 53 - 100L/4**	245	200
	16	11756	1.7	II	105.87	2936	5344	4282	9000	SK 53 - 100LH/4		
	12	15472	1.3	I	139.34	2720	5344	4136	9000			
	9.6	19678	0.9	*	177.22	2369	5344	3913	9000			
	9.2	20622	0.8	*	185.72	2268	5344	3854	9000			
	27	6981	3.8	III	62.87	4550	4372	6350	9227	**SK 63 - 100L/4**	324	206
	22	8601	3.4	III	77.46	4520	4581	6329	9713	SK 63 - 100LH/4		
	20	9667	2.9	III	87.06	4500	4691	6316	10015			
	16	11980	2.7	III	107.89	4446	4892	6275	10125			
	12	16179	2.0	III	145.71	4313	5159	6183	10125			
	9.4	20050	1.6	II	180.57	4149	5317	6071	10125			
	8	23773	1.4	II	214.10	3953	5405	5938	10125			
	6.4	29461	1.1	I	265.32	3557	5490	5681	10125			
	14	13814	3.1	III	124.41	6257	4775	8951	11250	**SK 73 - 100L/4**	503	212
	10	18436	2.7	III	166.03	6158	5011	8883	11250	SK 73 - 100LH/4		
	8.3	22830	2.1	III	205.61	6037	5182	8798	11250			
	7.5	25176	1.8	II	226.73	5960	5231	8746	11250	**SK 73/32 - 100L/4**	569	234
										SK 73/32 - 100LH/4		
	6.1	31016	1.4	II	279.33	5731	5342	8591	11250	**SK 73/22 - 100L/4**	545	234
	4.9	38408	1.2	I	345.90	5351	5393	8343	11250	SK 73/22 - 100LH/4		
	3.7	50820	0.9	*	457.68	4421	5369	7778	11250			
	7.2	26196	2.7	III	235.92	9988	9846	14060	14625	**SK 83/42 - 100L/4**	838	234
	6.2	30600	2.3	III	275.58	9902	10152	14000	14625	SK 83/42 - 100LH/4		
	4.5	41638	1.7	II	374.99	9626	10737	13806	14625			
	3.9	48617	1.5	II	437.84	9401	10998	13651	14625			
	3.2	58339	1.2	I	525.40	9018	11268	13390	14625			

(AGMA Class I = f_B 1.0 - 1.39 II = f_B 1.4 - 1.99 III = f_B ≥ 2.0 * = f_B < 1.0) **(Model Type in blue is an Energy Efficient motor)**

Send Quote Requests to info@automatedpt.com
Call +1(800)985-6929 To Order or Order Online At Nordgearmotors.com

DRIVESYSTEMS

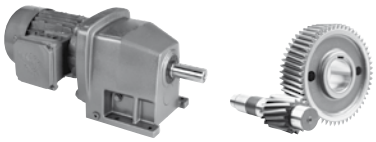

3.0 hp, 5.0 hp Gearmotors

Motor Power P_n [hp]	Output Speed n_2 [rpm]	Output Torque T_a [lb-in]	Service Factor f_B	AGMA Class	Gear Ratio i_{tot}	Standard Bearings F_{RN} OHL [lb]	Standard Bearings F_{AN} Thrust [lb]	Heavy Duty Bearings (VL) F_{RVL} OHL [lb]	Heavy Duty Bearings (VL) F_{AVL} Thrust [lb]	Model Type	Weight [lb]	Dim. Page
3.0	5.1	36978	2.9	III	333.02	14812	17903	20880	18000	SK 93/42 - 100L/4	1233	234
	3.7	50778	2.1	III	457.30	14623	18000	20747	18000	SK 93/42 - 100LH/4		
	3.1	60933	1.8	II	548.76	14443	18000	20619	18000			
	2.3	84036	1.3	I	756.82	13898	18000	20243	18000			
	2.1	90325	1.2	I	813.46	13716	18000	20117	18000			
	1.6	121194	0.9	*	1091.47	12573	18000	19355	18000			
	2.7	71321	2.5	III	642.31	22640	27000	27000	27000	SK 103/52 - 100L/4	1779	235
	2.1	90668	2.0	III	816.55	22385	27000	27000	27000	SK 103/52 - 100LH/4		
	1.8	104772	1.7	II	943.57	22158	27000	27000	27000			
	1.5	127539	1.4	II	1148.61	21717	27000	27000	27000			
	1.2	156865	1.1	I	1412.72	21002	27000	27000	27000			
	1	188955	0.9	*	1701.72	20009	27000	27000	27000			
	0.84	226193	0.8	*	2037.08	18542	27000	27000	27000			
5.0	1278	247	1.8	II	1.35		565			SK 11E - 100LA/4	60	152
	1120	281	1.6	II	1.54		596			SK 11E - 112MH/4		
	953	331	1.5	II	1.81		637					
	846	373	1.4	II	2.04		671					
	744	424	1.0	I	2.32		704					
	610	517	0.9	*	2.83		761					
	1182	267	2.0	III	1.46		736			SK 21E - 100LA/4	73	234
	932	338	1.7	II	1.85		812			SK 21E - 112MH/4		
	829	380	1.6	II	2.08		853					
	713	442	1.5	II	2.42		907					
	637	495	1.4	II	2.71		952					
	558	565	1.0	I	3.09		1004					
	470	671	0.9	*	3.67		1076					
	980	322	2.2	III	1.76		891			SK 31E - 100LA/4	84	158
	829	380	2.1	III	2.08		954			SK 31E - 112MH/4		
	669	472	1.9	II	2.58		1044					
	521	605	1.5	II	3.31		1161					
	470	671	1.5	II	3.67		1211					
	357	883	1.0	I	4.83		1359					
	583	541	1.7	II	2.96	126	423	1105	729	SK 12 - 100LA/4	68	173
	509	620	1.6	II	3.39	59	428	1130	743	SK 12 - 112MH/4		
	433	727	1.4	II	3.98			1130	758			
	399	789	1.3	I	4.32			1127	783			
	384	821	1.3	I	4.49			1125	767			
	350	901	1.1	I	4.93			1123	790			
	298	1058	1.0	I	5.79			1112	799			
	264	1193	0.9	*	6.53			1103	803			
	237	1330	0.8	*	7.28			1091	828			
	220	1435	0.8	*	7.85			1082	817			
	618	510	2.0	III	2.79	461	671	1555	900	SK 22 - 100LA/4	88	179
	489	645	1.8	II	3.53	484	713	1634	943	SK 22 - 112MH/4		
	435	726	1.7	II	3.97	493	729	1672	963			
	373	844	1.6	II	4.62	416	752	1676	988			
	333	947	1.5	II	5.18	347	765	1674	1006			
	298	1058	1.8	II	5.79	419	821	1672	1049			
	265	1190	1.7	II	6.51	333	833	1665	1067			
	251	1254	1.8	II	6.86	342	857	1663	1082			
	228	1383	1.6	II	7.57	203	846	1658	1085			
	203	1550	1.5	II	8.48	79	857	1649	1098			
	158	1990	1.4	II	10.89			1625	1143			
	141	2230	1.3	I	12.20			1609	1150			
	117	2685	1.1	I	14.69			1571	1166			
	103	3061	1.0	I	16.75			1535	1161			

(AGMA Class I = f_B 1.0 - 1.39 II = f_B 1.4 - 1.99 III = f_B ≥ 2.0 * = f_B < 1.0) (Model Type in blue is an Energy Efficient motor)

Send Quote Requests to info@automatedpt.com
Call +1(800)985-6929 To Order or Order Online At Nordgearmotors.com

5.0 hp Gearmotors

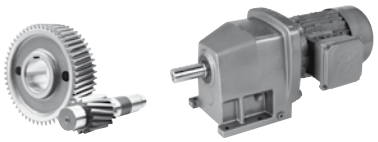

DRIVESYSTEMS

GEARMOTORS

Motor Power P_n [hp]	Output Speed n_2 [rpm]	Output Torque T_2 [lb-in]	Service Factor f_B	AGMA Class	Gear Ratio i_{tot}	Standard Bearings F_{RN} OHL [lb]	Standard Bearings F_{AN} Thrust [lb]	Heavy Duty Bearings (VL) F_{RVL} OHL [lb]	Heavy Duty Bearings (VL) F_{AVL} Thrust [lb]	Model Type	Weight [lb]	Dim. Page
5.0	583	541	2.3	III	2.96	567	956	2068	1265	**SK 32 - 100LA/4**	112	185
	460	685	2.2	III	3.75	603	1035	2126	1337	**SK 32 - 112MH/4**		
	389	810	2.1	III	4.43	628	1085	2126	1391			
	327	965	2.3	III	5.28	671	1175	2126	1465			
	314	1005	1.9	II	5.50	662	1152	2126	1454			
	303	1042	2.2	III	5.70	677	1195	2126	1485			
	256	1232	2.1	III	6.74	704	1249	2126	1537			
	245	1288	1.6	II	7.05	698	1231	2126	1528			
	218	1444	2.1	III	7.90	734	1310	2124	1595			
	206	1528	1.9	II	8.36	738	1321	2122	1602			
	176	1791	1.9	II	9.80	767	1377	2120	1661			
	147	2140	1.9	II	11.71	797	1447	2113	1721			
	119	2659	1.9	II	14.55	835	1523	2102	1793			
	115	2747	1.6	II	15.03	826	1496	2099	1782			
	106	2970	1.9	II	16.25	848	1555	2093	1829			
	104	3045	1.5	II	16.66	835	1512	2090	1809			
	92	3412	1.6	II	18.67	855	1562	2081	1850			
	83	3783	1.5	II	20.70	826	1571	2068	1868			
	75	4225	1.3	I	23.12	711	1586	2052	1890			
	237	1330	2.4	III	7.28	995	1728	2599	1431	**SK 42 - 100LA/4**	146	191
	203	1553	2.3	III	8.50	1035	1816	2597	1478	**SK 42 - 112MH/4**		
	169	1864	2.3	III	10.20	1087	1931	2594	1539			
	140	2244	2.3	III	12.28	1139	2034	2590	1600			
	120	2628	2.3	III	14.38	1184	2140	2583	1649			
	114	2763	2.1	III	15.12	1193	2149	2581	1649			
	97	3237	2.1	III	17.71	1235	2248	2572	1694			
	79	3997	2.1	III	21.87	1292	2367	2556	1748			
	71	4461	1.7	II	24.41	1217	2318	2543	1706			
	70	4509	1.7	II	24.67	1307	2390	2543	1753			
	59	5353	1.7	II	29.29	1022	2396	2516	1737			
	57	5567	1.7	II	30.46	1161	2491	2509	1789			
	49	6442	1.7	II	35.25	700	2448	2475	1744			
	42	7546	1.4	II	41.29	356	2491	2426	1753			
	34	9317	1.0	I	50.98			2324	1726			
	28	11086	0.8	*	60.66			2198	1620			
	42	7489	1.2	I	40.98	288	2448	2428	1728	**SK 43 - 100LA/4**	179	194
	36	8875	1.0	I	48.56			2351	1620	**SK 43 - 112MH/4**		
	30	10649	1.0	I	58.27			2232	1586			
	25	12815	0.9	*	70.12			2043	1505			
	97	3255	2.4	III	17.81	2896	5344	4457	6975	**SK 52 - 100LA/4**	209	197
	88	3582	2.4	III	19.60	2981	5344	4455	7169	**SK 52 - 112MH/4**		
	80	3962	2.4	III	21.68	3069	5344	4451	7367			
	72	4371	2.2	III	23.92	3152	5344	4446	7558			
	65	4836	2.2	III	26.46	3166	5344	4442	7765			
	54	5865	2.1	III	32.09	3143	5344	4426	8109			
	53	5950	1.9	II	32.56	3141	5344	4424	8188			
	48	6585	1.9	II	36.03	3128	5344	4412	8415			
	45	7027	2.1	III	38.45	3114	5344	4406	8496			
	35	8937	1.9	II	48.90	3056	5344	4363	9000			
	32	9834	1.7	II	53.81	3022	5344	4340	9000			
	29	10881	1.5	II	59.54	2977	5344	4309	9000			
	24	13047	1.1	I	71.39	2871	5344	4235	9000			
	22	14357	1.0	I	78.56	2792	5344	4185	9000			
	20	15885	1.0	I	86.92	2691	5344	4118	9000			

(AGMA Class I = f_B 1.0 - 1.39 II = f_B 1.4 - 1.99 III = f_B ≥ 2.0 * = f_B < 1.0) **(Model Type in blue is an Energy Efficient motor)**

Send Quote Requests to info@automatedpt.com
Call +1(800)985-6929 To Order or Order Online At Nordgearmotors.com

DRIVESYSTEMS

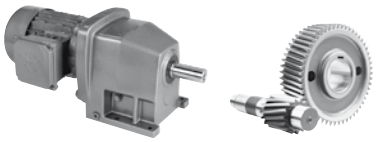

5.0 hp Gearmotors

Motor Power P_n [hp]	Output Speed n_2 [rpm]	Output Torque T_a [lb-in]	Service Factor f_B	AGMA Class	Gear Ratio i_{tot}	Standard Bearings F_{RN} OHL [lb]	Standard Bearings F_{AN} Thrust [lb]	Heavy Duty Bearings (VL) F_{RVL} OHL [lb]	Heavy Duty Bearings (VL) F_{AVL} Thrust [lb]	Model Type	Weight [lb]	Dim. Page
5.0	18	17451	1.1	I	95.49	2572	5344	4039	9000	**SK 53 - 100LA/4**	251	200
	16	19348	1.0	I	105.87	2401	5344	3933	9000	SK 53 - 112MH/4		
	12	25465	0.8	*	139.34	1564	5344	3485	9000			
	99	3174	2.5	III	17.37	4590	3058	6379	6352	**SK 63 - 100LA/4**	331	206
	83	3796	2.5	III	20.77	4586	3204	6377	6676	SK 63 - 112MH/4		
	78	4017	2.5	III	21.98	4583	3240	6374	6761			
	66	4803	2.5	III	26.28	4577	3389	6370	7106			
	56	5649	2.4	III	30.91	4568	3521	6363	7407			
	48	6599	2.3	III	36.11	4554	3643	6354	7711			
	40	7937	2.4	III	43.43	4534	3785	6338	8091			
	34	9271	2.3	III	50.73	4509	3902	6320	8381			
	32	9836	2.4	III	53.82	4496	3947	6311	8516			
	27	11490	2.3	III	62.87	4457	4055	6284	8809			
	22	14156	2.1	III	77.46	4381	4187	6230	9227			
	20	15911	1.7	II	87.06	4322	4255	6190	9452			
	16	19717	1.6	II	107.89	4165	4352	6082	9855			
	12	26629	1.2	I	145.71	3769	4430	5816	10125			
	9.6	33000	1.0	I	180.57	3238	4430	5488	10125			
	8.1	39128	0.8	*	214.10	2480	4352	5076	10125			
	19	16700	2.2	III	91.38	6199	4100	8910	11250	**SK 73 - 100LA/4**	509	212
	17	18359	1.9	II	100.46	6161	4154	8883	11250	SK 73 - 112MH/4		
	14	22736	1.9	II	124.41	6041	4255	8800	11250			
	10	30343	1.6	II	166.03	5760	4329	8611	11250			
	8.4	37576	1.3	I	205.61	5400	4329	8372	11250			
	10	31293	1.4	II	171.23	5717	4329	8582	11250	**SK 73/32 - 100LA/4**	576	234
	7.6	41436	1.1	I	226.73	5162	4316	8222	11250	SK 73/32 - 112MH/4		
	28	11311	2.8	III	61.89	10177	6876	14175	14625	**SK 83 - 100LA/4**	745	218
	25	12837	2.7	III	70.24	10163	7090	14175	14625	SK 83 - 112MH/4		
	21	14734	2.5	III	80.62	10145	7319	14173	14625			
	13	24997	2.6	III	136.78	10008	8190	14076	14625			
	8	39586	2.0	III	216.61	9684	8845	13847	14625			
	7.3	43115	1.6	II	235.92	9583	8960	13775	14625	**SK 83/42 - 100LA/4**	845	234
	6.3	50363	1.4	II	275.58	9340	9117	13606	14625	SK 83/42 - 112MH/4		
	4.6	68531	1.0	I	374.99	8519	9340	13057	14625			
	3.9	80017	0.9	*	437.84	7810	9385	12607	14625			
	9.5	33108	2.5	III	181.16	14855	14747	20909	18000	**SK 93/42 - 100LA/4**	1239	234
	7.2	43813	2.5	III	239.74	14726	15723	20819	18000	SK 93/42 - 112MH/4		
	6	52602	2.1	III	287.83	14594	16313	20725	18000			
	5.2	60861	1.8	II	333.02	14445	16792	20621	18000			
	3.8	83573	1.3	I	457.30	13912	17762	20252	18000			
	3.1	100288	1.1	I	548.76	13394	18000	19899	18000			
	2.3	138312	0.8	*	756.82	11732	18000	18819	18000			
	5.1	62160	2.8	III	340.13	22739	25423	27000	27000	**SK 103/52 - 100LA/4**	1786	235
	3.7	85494	2.1	III	467.81	22460	27000	27000	27000	SK 103/52 - 112MH/4		
	2.7	117385	1.5	II	642.31	21924	27000	27000	27000			
	2.1	149228	1.2	I	816.55	21204	27000	27000	27000			
	1.8	172441	1.0	I	943.57	20549	27000	27000	27000			
	1.5	209913	0.8	*	1148.61	19231	27000	27000	27000			

(AGMA Class I = f_B 1.0 - 1.39 II = f_B 1.4 - 1.99 III = f_B ≥ 2.0 * = f_B < 1.0) **(Model Type in blue is an Energy Efficient motor)**

Send Quote Requests to info@automatedpt.com
Call +1(800)985-6929 To Order or Order Online At Nordgearmotors.com

7.5 hp Gearmotors

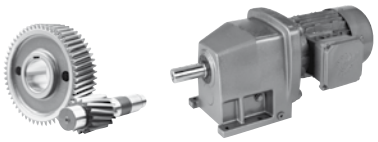

DRIVESYSTEMS

GEARMOTORS

Motor Power P_n [hp]	Output Speed n_2 [rpm]	Output Torque T_2 [lb-in]	Service Factor f_B	AGMA Class	Gear Ratio i_{tot}	Standard Bearings F_{RN} OHL [lb]	Standard Bearings F_{AN} Thrust [lb]	Heavy Duty Bearings (VL) F_{RVL} OHL [lb]	Heavy Duty Bearings (VL) F_{AVL} Thrust [lb]	Model Type	Weight [lb]	Dim. Page
7.5	1248	379	3.3	III	1.39		815			SK 31E - 132S/4	135	158
	986	479	2.8	III	1.76		896			SK 31E - 132SH/4		
	834	566	2.6	III	2.08		961					
	672	703	2.3	III	2.58		1051					
	524	901	1.0	I	3.31		1166					
	473	999	1.0	I	3.67		1222					
	563	839	2.9	III	3.08		1289			SK 41E - 132S/4	154	162
	507	931	1.3	I	3.42		1346			SK 41E - 132SH/4		
	447	1057	1.2	I	3.88		1424					
	404	1168	1.2	I	4.29		1483					
	329	1435	1.2	I	5.27		1613					
	242	1955	0.9	*	7.18		1834					
	586	806	3.4	III	2.96	538	875	1994	1211	SK 32 - 132S/4	163	185
	463	1021	3.2	III	3.75	565	927	2102	1269	SK 32 - 132SH/4		
	392	1206	2.9	III	4.43	583	965	2126	1310			
	329	1438	3.4	III	5.28	623	1046	2124	1384			
	315	1498	2.6	III	5.50	605	997	2124	1357			
	304	1552	3.2	III	5.70	628	1049	2122	1395			
	257	1835	2.9	III	6.74	644	1080	2117	1433			
	246	1920	1.1	I	7.05	626	1026	2117	1404			
	220	2151	2.7	III	7.90	664	1114	2113	1476			
	208	2276	2.3	III	8.36	659	1100	2111	1469			
	177	2669	2.1	III	9.80	675	1134	2102	1508			
	148	3189	2.0	III	11.71	542	1159	2088	1548			
	119	3962	1.5	II	14.55	356	1175	2061	1589			
	115	4093	1.1	I	15.03	180	1125	2057	1559			
	107	4425	1.3	I	16.25	214	1170	2043	1600			
	104	4537	1.0	I	16.66			2039	1557			
	93	5084	1.1	I	18.67			2014	1584			
	84	5637	1.0	I	20.70			1985	1575			
	75	6296	0.9	*	23.12			1946	1571			
	238	1982	3.5	III	7.28	938	1564	2592	1339	SK 42 - 132S/4	196	191
	204	2315	3.2	III	8.50	970	1627	2588	1368	SK 42 - 132SH/4		
	170	2778	3.2	III	10.20	1010	1708	2581	1415			
	141	3344	3.2	III	12.28	1049	1782	2570	1449			
	121	3916	2.6	III	14.38	1078	1836	2558	1474			
	115	4117	2.7	III	15.12	961	1825	2552	1467			
	98	4823	2.2	III	17.71	788	1872	2534	1483			
	97	4880	1.8	II	17.92	545	1798	2531	1438			
	81	5855	1.8	II	21.50	279	1836	2498	1449			
	79	5955	1.6	II	21.87	468	1913	2493	1496			
	71	6647	1.1	I	24.41			2466	1393			
	70	6718	1.2	I	24.67	74	1872	2464	1460			
	67	7047	1.6	II	25.88			2448	1429			
	59	7976	1.1	I	29.29			2403	1377			
	57	8294	1.2	I	30.46			2385	1433			
	49	9599	1.1	I	35.25			2306	1321			
	42	11244	0.9	*	41.29			2185	1267			

(AGMA Class I = f_B 1.0 - 1.39 II = f_B 1.4 - 1.99 III = f_B ≥ 2.0 * = f_B < 1.0) **(Model Type in blue is an Energy Efficient motor)**

Send Quote Requests to info@automatedpt.com
Call +1(800)985-6929 To Order or Order Online At Nordgearmotors.com

NORD DRIVESYSTEMS

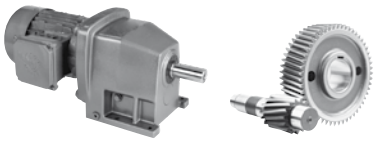

7.5 hp Gearmotors

Motor Power P_n [hp]	Output Speed n_2 [rpm]	Output Torque T_a [lb-in]	Service Factor f_B	AGMA Class	Gear Ratio i_{tot}	Standard Bearings F_{RN} OHL [lb]	Standard Bearings F_{AN} Thrust [lb]	Heavy Duty Bearings (VL) F_{RVL} OHL [lb]	Heavy Duty Bearings (VL) F_{AVL} Thrust [lb]	Model Type	Weight [lb]	Dim. Page
7.5	97	4850	3.4	III	17.81	2801	5344	4442	6820	**SK 52 - 132S/4**	260	197
	89	5337	3.2	III	19.60	2880	5344	4435	6998	SK 52 - 132SH/4		
	80	5904	2.8	III	21.68	2957	5344	4426	7191			
	73	6514	2.6	III	23.92	3035	5344	4415	7367			
	72	6554	2.3	III	24.07	2990	5344	4415	7306			
	66	7205	2.3	III	26.46	3110	5344	4401	7544			
	60	7856	2.3	III	28.85	3092	5344	4388	7668			
	54	8738	1.4	II	32.09	3062	5344	4367	7828			
	53	8866	1.3	I	32.56	3058	5344	4365	7918			
	47	9991	1.7	II	36.69	3015	5344	4336	8123			
	48	9811	1.3	I	36.03	3022	5344	4340	8109			
	45	10470	1.4	II	38.45	2995	5344	4322	8161			
	43	10993	1.5	II	40.37	2972	5344	4307	8321			
	35	13316	1.3	I	48.90	2855	5344	4226	8660			
	32	14653	1.2	I	53.81	2774	5344	4172	8843			
	29	16213	1.0	I	59.54	2669	5344	4102	9000			
	47	10089	2.6	III	37.05	4491	3443	6309	7490	**SK 62 - 132S/4**	386	203
	36	13270	1.7	II	48.73	4410	3591	6251	7949	SK 62 - 132SH/4		
	56	8417	3.5	III	30.91	4525	3335	6332	7175	**SK 63 - 132S/4**	381	206
	48	9833	3.2	III	36.11	4496	3422	6311	7432	SK 63 - 132SH/4		
	40	11826	2.8	III	43.43	4448	3517	6280	7747			
	34	13814	2.4	III	50.73	4392	3591	6239	8015			
	32	14656	2.2	III	53.82	4365	3618	6219	8091			
	28	17120	1.9	II	62.87	4277	3672	6158	8341			
	22	21093	1.6	II	77.46	4100	3713	6035	8654			
	20	23707	1.2	I	87.06	3956	3731	5940	8809			
	16	29123	1.1	I	106.95	3584	3701	5699	9052			
	16	29379	1.1	I	107.89	3564	3695	5686	9065			
	13	36092	0.9	*	132.54	2896	3618	5292	9257			
	12	39678	0.8	*	145.71	2392	3544	5033	9333			
	33	14225	3.5	III	52.24	6251	3454	8946	9635	**SK 73 - 132S/4**	560	212
	29	16464	3.0	III	60.46	6206	3521	8915	9947	SK 73 - 132SH/4		
	23	20388	2.3	III	74.87	6109	3596	8847	10404			
	19	24883	1.9	II	91.38	5972	3636	8753	10814			
	17	27356	1.3	I	100.46	5882	3647	8692	11005			
	14	33878	1.3	I	124.41	5596	3629	8501	11250			
	14	33921	1.5	II	124.57	5594	3629	8501	11250			
	10	45211	1.1	I	166.03	4896	3499	8057	11250			
	8.4	55989	0.8	*	205.61	3877	3312	7484	11250			
	22	21953	3.6	III	80.62	10058	6944	14110	14625	**SK 83 - 132S/4**	796	218
	17	28320	2.9	III	1040	9950	7261	14033	14625	SK 83 - 132SH/4		
	13	37246	1.8	II	136.78	9747	7558	13889	14625			
	11	44849	1.8	II	164.70	9529	7704	13736	14625			
	8	58984	1.3	I	216.61	8991	7855	13370	14625			
	8.7	54562	1.3	I	200.37	9178	7830	13496	14625	**SK 83/42 - 132S/4**	895	234
	7.4	64243	1.1	I	235.92	8744	7868	13205	14625	SK 83/42 - 132SH/4		
	6.3	75042	0.9	*	275.58	8138	7855	12812	14625			
	19	25417	4.0	III	93.34	14924	12146	20959	18000	**SK 93 - 132S/4**	1191	224
	16	29720	3.4	III	109.14	14888	12582	20934	18000	SK 93 - 132SH/4		
	9.2	51164	2.4	III	187.89	14616	14121	20743	18000			

(AGMA Class I = f_B 1.0 - 1.39 II = f_B 1.4 - 1.99 III = f_B ≥ 2.0 * = f_B < 1.0) **(Model Type in blue is an Energy Efficient motor)**

Send Quote Requests to info@automatedpt.com
Call +1(800)985-6929 To Order or Order Online At Nordgearmotors.com

7.5 hp, 10 hp Gearmotors

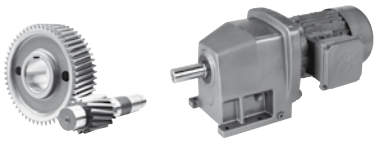

DRIVESYSTEMS

GEARMOTORS

Motor Power P_n [hp]	Output Speed n_2 [rpm]	Output Torque T_2 [lb-in]	Service Factor f_B	AGMA Class	Gear Ratio i_{tot}	Standard Bearings F_{RN} OHL [lb]	Standard Bearings F_{AN} Thrust [lb]	Heavy Duty Bearings (VL) F_{RVL} OHL [lb]	Heavy Duty Bearings (VL) F_{AVL} Thrust [lb]	Model Type	Weight [lb]	Dim. Page
7.5	7.2	65283	1.7	II	239.74	14355	14747	20558	18000	**SK 93/42 - 132S/4**	1290	234
	6	78378	1.4	II	287.83	14051	15179	20347	18000	SK 93/42 - 132SH/4		
	5.2	90684	1.2	I	333.02	13705	15473	20111	18000			
	3.8	124526	0.9	*	457.30	12422	15950	19258	18000			
	8.4	56496	3.6	III	207.47	22793	21724	27000	27000	**SK 103 - 132S/4**	1674	230
										SK 103 - 132SH/4		
	7.1	66653	2.7	III	244.77	22691	22541	27000	27000	**SK 103/52 - 132S/4**	1837	235
	5.8	80791	2.2	III	296.69	22523	23501	27000	27000	SK 103/52 - 132SH/4		
	5.1	92620	1.9	II	340.13	22356	24152	27000	27000			
	3.7	127388	1.4	II	467.81	21719	25668	27000	27000			
	2.7	174906	1.0	I	642.31	20473	26802	27000	27000			
	2.1	222352	0.8	*	816.55	18711	27000	27000	27000			
10	1248	505	2.5	III	1.39		824			**SK 31E - 132M/4**	159	158
	986	640	2.1	III	1.76		909			SK 31E - 132MH/4		
	834	756	1.9	II	2.08		970					
	672	938	1.7	II	2.58		1062					
	524	1203	0.8	*	3.31		1177					
	1230	512	3.0	III	1.41		938			**SK 41E - 132M/4**	179	162
	1157	545	3.0	III	1.50		963			SK 41E - 132MH/4		
	1064	592	2.9	III	1.63		997					
	953	661	2.7	III	1.82		1042					
	811	778	2.6	III	2.14		1116					
	694	909	2.4	III	2.50		1188					
	563	1119	2.2	III	3.08		1298					
	507	1243	1.0	I	3.42		1352					
	447	1410	0.9	*	3.88		1424					
	404	1559	0.9	*	4.29		1485					
	329	1915	0.9	*	5.27		1616					
	586	1076	2.5	III	2.96	509	797	1924	1157	**SK 32 - 132M/4**	187	185
	463	1363	2.4	III	3.75	529	828	2012	1204	SK 32 - 132MH/4		
	392	1610	2.2	III	4.43	540	839	2068	1231			
	329	1919	2.5	III	5.28	576	916	2117	1303			
	315	1999	2.0	III	5.50	488	846	2115	1260			
	304	2071	2.4	III	5.70	574	907	2113	1307			
	257	2449	2.2	III	6.74	475	907	2106	1325			
	246	2562	0.8	*	7.05	227	830	2104	1280			
	220	2871	2.0	III	7.90	367	918	2097	1352			
	208	3038	1.7	II	8.36	232	889	2090	1339			
	177	3561	1.6	II	9.80	72	889	2075	1361			
	148	4255	1.5	II	11.71			2050	1375			
	119	5287	1.1	I	14.55			2005	1384			
	115	5462	0.8	*	15.03			1996	1337			
	107	5905	1.0	I	16.25			1971	1375			
	104	6054	0.8	*	16.66			1962	1312			
	93	6785	0.8	*	18.67			1915	1323			
	84	7522	0.8	*	20.70			1863	1283			

(AGMA Class I = f_B 1.0 - 1.39 II = f_B 1.4 - 1.99 III = f_B ≥ 2.0 * = f_B < 1.0) **(Model Type in blue is an Energy Efficient motor)**

Send Quote Requests to info@automatedpt.com
Call +1(800)985-6929 To Order or Order Online At Nordgearmotors.com

DRIVESYSTEMS

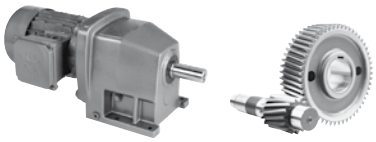

10 hp Gearmotors

Motor Power P_n [hp]	Output Speed n_2 [rpm]	Output Torque T_a [lb-in]	Service Factor f_B	AGMA Class	Gear Ratio i_{tot}	Standard Bearings F_{RN} OHL [lb]	Standard Bearings F_{AN} Thrust [lb]	Heavy Duty Bearings (VL) F_{RVL} OHL [lb]	Heavy Duty Bearings (VL) F_{AVL} Thrust [lb]	Model Type	Weight [lb]	Dim. Page
10	302	2090	3.0	III	5.75	851	1368	2572	1224	**SK 42 - 132M/4**	221	191
	280	2249	2.7	III	6.19	857	1370	2590	1229	SK 42 - 132MH/4		
	261	2417	2.9	III	6.65	875	1409	2588	1247			
	238	2646	2.6	III	7.28	880	1409	2583	1247			
	204	3089	2.4	III	8.50	875	1440	2576	1262			
	170	3707	2.4	III	10.20	752	1499	2563	1292			
	141	4463	2.4	III	12.28	529	1517	2543	1298			
	121	5226	2.0	III	14.38	293	1532	2520	1305			
	115	5495	2.0	III	15.12	124	1512	2511	1285			
	98	6436	1.6	II	17.71			2475	1274			
	97	6512	1.4	II	17.92			2473	1206			
	81	7813	1.3	I	21.50			2412	1184			
	79	7948	1.2	I	21.87			2403	1244			
	70	8965	0.9	*	24.67			2347	1168			
	67	9405	1.2	I	25.88			2320	1121			
	57	11069	0.9	*	30.46			2198	1087			
	164	3845	2.9	III	10.58	2354	4514	4453	5848	**SK 52 - 132M/4**	284	197
	129	4888	2.9	III	13.45	2522	4939	4439	6235	SK 52 - 132MH/4		
	124	5088	2.6	III	14.00	2534	4979	4437	6275			
	97	6472	2.6	III	17.81	2709	5344	4415	6680			
	89	7123	2.4	III	19.60	2777	5344	4403	6854			
	80	7879	2.1	III	21.68	2851	5344	4388	7009			
	73	8693	1.9	II	23.92	2905	5344	4370	7169			
	72	8747	1.7	II	24.07	2853	5344	4367	7088			
	66	9616	1.7	II	26.46	2977	5344	4345	7342			
	60	10484	1.7	II	28.85	2975	5344	4320	7400			
	53	11832	0.9	*	32.56	2934	5344	4280	7668			
	47	13333	1.3	I	36.69	2853	5344	4226	7828			
	48	13093	0.9	*	36.03	2867	5344	4235	7828			
	43	14670	1.2	I	40.37	2774	5344	4172	7994			
	47	13464	2.0	III	37.05	4403	3224	6246	7232	**SK 62 - 132M/4**	410	203
										SK 62 - 132MH/4		
	100	6312	2.7	III	17.37	4559	2837	6356	6073	**SK 63 - 132M/4**	406	206
	84	7548	2.7	III	20.77	4541	2952	6343	6361	SK 63 - 132MH/4		
	79	7988	2.7	III	21.98	4532	2957	6338	6424			
	66	9550	2.7	III	26.28	4502	3074	6316	6707			
	56	11233	2.6	III	30.91	4464	3139	6289	6948			
	48	13122	2.4	III	36.11	4412	3204	6253	7175			
	40	15783	2.1	III	43.43	4327	3256	6192	7421			
	34	18435	1.8	II	50.73	4223	3281	6120	7625			
	32	19558	1.7	II	53.82	4174	3287	6086	7700			
	28	22847	1.4	II	62.87	4005	3287	5972	7873			
	22	28149	1.2	I	77.46	3659	3245	5747	8091			
	20	31638	0.9	*	87.06	3368	3204	5564	8170			
	16	38866	0.8	*	106.95	2518	3049	5096	8276			
	16	39207	0.8	*	107.89	2466	3044	5069	8276			
	52	12079	3.2	III	33.24	6287	3033	8971	8433	**SK 73 - 132M/4**	584	212
	46	13675	3.0	III	37.63	6260	3087	8953	8694	SK 73 - 132MH/4		
	38	16593	2.9	III	45.66	6201	3152	8912	9050			
	33	18984	2.6	III	52.24	6145	3188	8874	9299			
	29	21971	2.3	III	60.46	6064	3213	8816	9558			
	23	27208	1.7	II	74.87	5886	3218	8696	9916			
	19	33208	1.4	II	91.38	5630	3184	8523	10224			
	17	36507	0.9	*	100.46	5459	3148	8413	10355			
	14	45211	0.9	*	124.41	4896	2999	8057	10591			
	14	45269	1.1	I	124.57	4892	2999	8055	10591			

(AGMA Class I = f_B 1.0 - 1.39 II = f_B 1.4 - 1.99 III = f_B ≥ 2.0 * = f_B < 1.0) **(Model Type in blue is an Energy Efficient motor)**

Send Quote Requests to info@automatedpt.com
Call +1(800)985-6929 To Order or Order Online At Nordgearmotors.com

10 hp, 15 hp Gearmotors

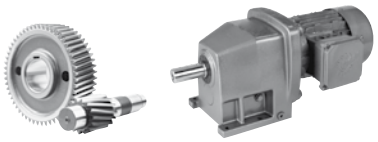

DRIVESYSTEMS

GEARMOTORS

Motor Power P_n [hp]	Output Speed n_2 [rpm]	Output Torque T_2 [lb-in]	Service Factor f_B	AGMA Class	Gear Ratio i_{tot}	Standard Bearings F_{RN} OHL [lb]	Standard Bearings F_{AN} Thrust [lb]	Heavy Duty Bearings (VL) F_{RVL} OHL [lb]	Heavy Duty Bearings (VL) F_{AVL} Thrust [lb]	Model Type	Weight [lb]	Dim. Page
10	28	22491	3.1	III	61.89	10049	6296	14103	14625	**SK 83 - 132M/4** SK 83 - 132MH/4	820	218
	25	25525	3.0	III	70.24	9999	6449	14069	14625			
	22	29297	2.7	III	80.62	9929	6586	14018	14625			
	17	37794	2.1	III	104.00	9734	6788	13880	14625			
	11	59852	1.3	I	164.70	8951	6953	13345	14625			
	14	45970	1.5	II	126.50	9491	6899	13712	14625	**SK 83/42 - 132M/4** SK 83/42 - 132MH/4	919	234
	12	54125	1.3	I	148.94	9196	6944	13509	14625			
	8.7	72815	1.0	I	200.37	8276	6921	12899	14625			
	7.4	85734	0.8	*	235.92	7389	6788	12350	14625			
	19	33920	3.0	III	93.34	14846	11763	20905	18000	**SK 93 - 132M/4** SK 93 - 132MH/4	1215	224
	16	39662	2.6	III	109.14	14780	12166	20858	18000			
	9.2	68279	1.8	II	187.89	14292	13372	20513	18000			
	14	46334	2.3	III	127.50	14690	12542	20795	18000	**SK 93/52 - 132M/4** SK 93/52 - 132MH/4	1378	235
	11	58624	1.8	II	161.32	14488	13097	20651	18000			
	9.6	65834	1.6	II	181.16	14344	13309	20549	18000	**SK 93/42 - 132M/4** SK 93/42 - 132 MH/4	1314	234
	7.2	87122	1.2	I	239.74	13811	13808	20183	18000			
	6	104598	1.0	I	287.83	13241	14076	19796	18000			
	5.2	121020	0.9	*	333.02	12580	14166	19361	18000			
	8.4	75395	2.7	III	207.47	22590	21006	27000	27000	**SK 103 - 132M/4** SK 103 - 132MH/4	1698	230
	11	56193	3.1	III	154.63	22795	19701	27000	27000	**SK 103/52 - 132M/4** SK 103/52 - 132MH/4	1861	235
	9.4	67091	2.6	III	184.62	22687	20540	27000	27000			
	7.1	88950	2.0	III	244.77	22410	21690	27000	27000			
	5.8	107817	1.6	II	296.69	22104	22507	27000	27000			
	5.1	123604	1.4	II	340.13	21800	22943	27000	27000			
	3.7	170003	1.0	I	467.81	20624	23958	27000	27000			
	2.7	233416	0.8	*	642.31	18212	24579	27000	27000			
15	1255	753	2.1	III	1.41		945			**SK 41E - 160M/4** SK 41E - 160MH/4	218	162
	1180	801	2.1	III	1.50		970					
	1086	871	2.0	III	1.63		1004					
	973	972	2.0	III	1.82		1049					
	827	1143	1.9	II	2.14		1118					
	708	1336	1.8	II	2.50		1190					
	575	1646	1.5	II	3.08		1298					
	859	1101	3.1	III	2.06		1361			**SK 51E - 160M/4** SK 51E - 160MH/4	238	164
	708	1336	2.8	III	2.50		1476					
	619	1528	2.6	III	2.86		1562					
	535	1769	2.5	III	3.31		1658					
	438	2159	1.6	II	4.04		1800					
	586	1614	3.3	III	3.02	668	977	2068	983	**SK 42 - 160M/4** SK 42 - 160MH/4	260	191
	551	1715	3.2	III	3.21	675	988	2088	986			
	506	1870	3.1	III	3.50	682	999	2120	995			
	455	2079	3.0	III	3.89	686	1008	2144	1004			
	370	2559	3.3	III	4.79	704	1094	2270	1060			
	386	2447	2.8	III	4.58	547	1022	2185	1013			
	347	2725	3.2	III	5.10	648	1098	2286	1062			
	331	2859	2.5	III	5.35	369	1028	2216	1015			
	308	3072	3.3	III	5.75	601	1127	2340	1082			
	286	3307	2.9	III	6.19	441	1107	2329	1069			
	266	3553	2.9	III	6.65	425	1139	2369	1087			
	243	3890	2.4	III	7.28	203	1105	2349	1067			

(AGMA Class I = f_B 1.0 - 1.39 II = f_B 1.4 - 1.99 III = f_B ≥ 2.0 * = f_B < 1.0) **(Model Type in blue is an Energy Efficient motor)**

Send Quote Requests to info@automatedpt.com
Call +1(800)985-6929 To Order or Order Online At Nordgearmotors.com

DRIVESYSTEMS

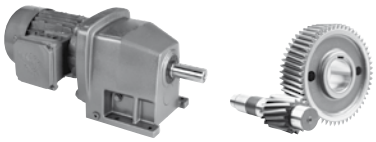

15 hp Gearmotors

Motor Power P_n [hp]	Output Speed n_2 [rpm]	Output Torque T_a [lb-in]	Service Factor f_B	AGMA Class	Gear Ratio i_{tot}	Standard Bearings F_{RN} OHL [lb]	Standard Bearings F_{AN} Thrust [lb]	Heavy Duty Bearings (VL) F_{RVL} OHL [lb]	Heavy Duty Bearings (VL) F_{AVL} Thrust [lb]	Model Type	Weight [lb]	Dim. Page
15	208	4542	2.1	III	8.50			2354	1046	**SK 42 - 160M/4**	260	191
	174	5450	1.9	II	10.20			2390	1044	SK 42 - 160MH/4		
	144	6561	1.6	II	12.28			2374	1013			
	123	7684	1.3	I	14.38			2345	972			
	117	8079	1.4	II	15.12			2282	934			
	100	9463	1.1	I	17.71			2207	869			
	81	11686	0.8	*	21.87			2063	756			
	276	3430	3.5	III	6.42	1960	3562	4457	4973	**SK 52 - 160M/4**	324	197
	243	3885	3.3	III	7.27	2023	3706	4453	5135	SK 52 - 160MH/4		
	230	4114	3.4	III	7.70	2063	3791	4451	5218			
	200	4718	3.1	III	8.83	2124	3940	4442	5380			
	167	5653	2.8	III	10.58	2230	4194	4428	5634			
	132	7187	2.3	III	13.45	2372	4552	4401	5990			
	126	7481	2.3	III	14.00	2365	4543	4397	6010			
	99	9516	1.8	II	17.81	2511	4907	4347	6365			
	90	10473	1.6	II	19.6	2558	5042	4322	6521			
	82	11584	1.4	II	21.68	2612	5182	4286	6647			
	74	12781	1.3	I	23.92	2642	5292	4246	6755			
	67	14138	1.2	I	26.46	2437	5344	4194	6896			
	112	8442	3.1	III	15.80	4525	2615	6332	5713	**SK 62 - 160M/4**	450	203
	98	9693	2.8	III	18.14	4500	2660	6314	5879	SK 62 - 160MH/4		
	48	19797	1.3	I	37.05	4163	2781	6080	6676			
	102	9281	3.0	III	17.37	4509	2615	6320	5787	**SK 63 - 160M/4**	445	206
	85	11098	2.6	III	20.77	4469	2693	6291	6035	SK 63 - 160 MH/4		
	81	11744	2.4	III	21.98	4451	2673	6280	6062			
	67	14042	2.0	III	26.28	4385	2752	6235	6300			
	57	16516	1.9	II	30.91	4300	2765	6174	6476			
	49	19294	1.7	II	36.11	4185	2761	6095	6622			
	41	23206	1.4	II	43.43	3985	2729	5958	6773			
	35	27106	1.2	I	50.73	3735	2673	5796	6881			
	33	28757	1.1	I	53.82	3614	2644	5717	6903			
	28	33593	1.0	I	62.87	3177	2538	5452	6959			
	23	41389	0.8	*	77.46	2088	2336	4896	6948			
	62	15298	2.3	III	28.63	6230	2702	8930	7785	**SK 72 - 160M/4**	602	209
	54	17654	1.6	II	33.04	6179	2678	8897	7936	SK 72 - 160MH/4		
	40	23355	1.5	II	43.71	6021	2745	8786	8433			
	63	15132	2.9	III	28.32	6233	2678	8933	7722	**SK 73 - 160M/4**	624	212
	53	17761	2.5	III	33.24	6176	2702	8894	7974	SK 73 - 160MH/4		
	47	20107	2.2	III	37.63	6116	2707	8854	8154			
	39	24397	1.9	II	45.66	5987	2702	8764	8433			
	34	27913	1.8	II	52.24	5859	2678	8678	8597			
	29	32305	1.5	II	60.46	5672	2621	8552	8780			
	24	40005	1.2	I	74.87	5254	2482	8280	8964			
	19	48826	1.0	I	91.38	4604	2284	7884	9050			
	55	17162	3.4	III	32.12	10121	5218	14155	12553	**SK 82 - 160M/4**	842	215
	44	21613	1.7	II	40.45	10062	5425	14112	13212	SK 82 - 160MH/4		
	36	26086	1.8	II	48.82	9990	5591	14063	13842			
	45	20881	3.3	III	39.08	10073	5380	14121	13106	**SK 83 - 160M/4**	860	218
	40	23713	3.3	III	44.38	10031	5495	14090	13491	SK 83 - 160MH/4		
	34	27523	2.9	III	51.51	9963	5600	14042	13930			
	29	33069	2.4	III	61.89	9848	5717	13961	14477			
	25	37531	2.1	III	70.24	9740	5783	13885	14625			
	22	43077	1.8	II	80.62	9583	5830	13775	14625			
	17	55570	1.5	II	104.00	9137	5830	13469	14625			
	11	88003	0.9	*	164.70	7205	5486	12240	14625			

(AGMA Class I = f_B 1.0 - 1.39 II = f_B 1.4 - 1.99 III = f_B ≥ 2.0 * = f_B < 1.0) **(Model Type in blue is an Energy Efficient motor)**

Send Quote Requests to info@automatedpt.com
Call +1(800)985-6929 To Order or Order Online At Nordgearmotors.com

15 hp, 20 hp Gearmotors

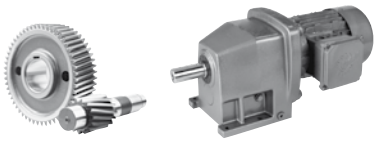

DRIVESYSTEMS

GEARMOTORS

Motor Power P_n [hp]	Output Speed n_2 [rpm]	Output Torque T_2 [lb-in]	Service Factor f_B	AGMA Class	Gear Ratio i_{tot}	Standard Bearings F_{RN} OHL [lb]	Standard Bearings F_{AN} Thrust [lb]	Heavy Duty Bearings (VL) F_{RVL} OHL [lb]	Heavy Duty Bearings (VL) F_{AVL} Thrust [lb]	Model Type	Weight [lb]	Dim. Page
15	24	38722	3.1	III	72.47	14792	10514	20867	18000	**SK 93 - 160M/4**	1255	224
	19	49874	2.5	III	93.34	14639	11032	20756	18000	SK 93 - 160MH/4		
	16	58316	1.8	II	109.14	14492	11264	20655	18000			
	14	65748	1.9	II	123.05	14346	11484	20552	18000			
	9.4	100394	1.2	I	187.89	13390	11896	19897	18000			
	9.8	96798	1.1	I	181.16	13511	11876	19978	18000	**SK 93/42 - 160M/4**	1354	234
	7.4	128098	0.8	*	239.74	12254	11954	19150	18000	SK 93/42 - 160MH/4		
	8.5	110856	1.8	II	207.47	22050	19514	27000	27000	**SK 103 - 160M/4**	1738	230
										SK 103 - 160MH/4		
	17	56296	3.1	III	105.36	22795	17219	27000	27000	**SK 103/52 - 160M/4**	1901	235
	14	65412	2.7	III	122.42	22705	17750	27000	27000	SK 103/52 - 160MH/4		
	11	82622	2.1	III	154.63	22498	18567	27000	27000			
	9.6	98647	1.8	II	184.62	22262	19141	27000	27000			
	7.2	130786	1.4	II	244.77	21645	19924	27000	27000			
	6	158528	1.1	I	296.69	20957	20345	27000	27000			
	5.2	181739	1.0	I	340.13	20255	20574	27000	27000			
20	1252	1007	1.6	II	1.41		963			**SK 41E - 160L/4**	256	162
	1177	1071	1.6	II	1.50		988			SK 41E - 160LH/4		
	1083	1164	1.5	II	1.63		1019					
	970	1299	1.5	II	1.82		1067					
	825	1528	1.4	II	2.14		1139					
	706	1785	1.3	I	2.50		1211					
	573	2199	1.1	I	3.08		1314					
	1423	885	2.7	III	1.24		1118			**SK 51E - 160L/4**	276	164
	1226	1028	2.6	III	1.44		1186			SK 51E - 160LH/4		
	1161	1085	2.5	III	1.52		1215					
	1076	1171	2.5	III	1.64		1253					
	970	1299	2.3	III	1.82		1305					
	857	1471	2.3	III	2.06		1375					
	706	1785	2.1	III	2.50		1487					
	617	2042	2.0	III	2.86		1575					
	533	2363	1.8	II	3.31		1667					
	437	2884	1.2	I	4.04		1807					
	584	2156	2.5	III	3.02	457	839	1931	896	**SK 42 - 160L/4**	298	191
	550	2292	2.4	III	3.21	403	839	1942	896	SK 42 - 160LH/4		
	504	2499	2.4	III	3.50	315	839	1955	896			
	454	2777	2.2	III	3.89	189	839	1964	896			
	368	3420	2.5	III	4.79	155	900	2075	938			
	385	3270	2.1	III	4.58			1978	884			
	346	3641	2.4	III	5.10	61	891	2079	934			
	330	3820	1.9	II	5.35			1969	864			
	307	4105	2.4	III	5.75			2115	943			
	285	4419	2.2	III	6.19			2079	916			
	265	4748	2.2	III	6.65			2111	925			
	242	5198	1.8	II	7.28			2050	880			
	208	6069	1.6	II	8.50			2003	835			
	173	7282	1.4	II	10.20			1969	797			
	144	8768	1.2	I	12.28			1872	718			
	123	10267	1.0	I	14.38			1771	641			
	117	10795	1.0	I	15.12			1539	574			
	100	12644	0.8	*	17.71			990	459			

(AGMA Class I = f_B 1.0 - 1.39 II = f_B 1.4 - 1.99 III = f_B ≥ 2.0 * = f_B < 1.0) **(Model Type in blue is an Energy Efficient motor)**

Send Quote Requests to info@automatedpt.com
Call +1(800)985-6929 To Order or Order Online At Nordgearmotors.com

DRIVESYSTEMS

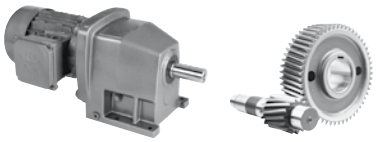

20 hp Gearmotors

Motor Power P_n [hp]	Output Speed n_2 [rpm]	Output Torque T_a [lb-in]	Service Factor f_B	AGMA Class	Gear Ratio i_{tot}	Standard Bearings F_{RN} OHL [lb]	Standard Bearings F_{AN} Thrust [lb]	Heavy Duty Bearings (VL) F_{RVL} OHL [lb]	Heavy Duty Bearings (VL) F_{AVL} Thrust [lb]	Model Type	Weight [lb]	Dim. Page
20	433	2913	2.6	III	4.08	1667	2878	4426	4318	**SK 52 - 160L/4**	362	197
	403	3127	3.0	III	4.38	1721	2995	4460	4430	SK 52 - 160LH/4		
	383	3291	2.5	III	4.61	1717	2995	4457	4453			
	347	3627	2.9	III	5.08	1787	3152	4455	4597			
	315	3998	2.3	III	5.60	1802	3184	4451	4664			
	305	4134	2.8	III	5.79	1845	3281	4448	4754			
	290	4348	2.9	III	6.09	1874	3350	4446	4824			
	275	4584	2.6	III	6.42	1890	3382	4444	4871			
	243	5191	2.5	III	7.27	1942	3503	4435	5013			
	229	5498	2.6	III	7.70	1980	3596	4430	5094			
	200	6304	2.3	III	8.83	2025	3706	4419	5234			
	167	7554	2.1	III	10.58	2113	3908	4394	5465			
	131	9603	1.7	II	13.45	2234	4201	4345	5783			
	126	9996	1.7	II	14.00	2212	4160	4336	5774			
	99	12716	1.3	I	17.81	1964	4451	4248	6086			
	90	13994	1.2	I	19.60	1697	4543	4158	6206			
	81	15479	1.1	I	21.68	1377	4617	3974	6325			
	74	17078	1.0	I	23.92	817	4640	3557	6386			
	67	18892	0.9	*	26.46	369	4700	3267	6489			
	152	8275	2.7	III	11.59	4527	2340	6334	5173	**SK 62 - 160L/4**	487	203
	127	9938	2.5	III	13.92	4493	2392	6311	5357	SK 62 - 160LH/4		
	112	11281	2.4	III	15.80	4464	2423	6289	5497			
	97	12951	2.1	III	18.14	4419	2448	6257	5632			
	48	26453	1.0	I	37.05	3782	2351	5825	6161			
	102	12402	2.2	III	17.37	4435	2392	6269	5533	**SK 63 - 160L/4**	483	206
	85	14829	1.9	II	20.77	4361	2444	6217	5742	SK 63 - 160LH/4		
	80	15693	1.8	II	21.98	4331	2408	6194	5742			
	67	18763	1.5	II	26.28	4208	2435	6111	5929			
	57	22069	1.4	II	30.91	4048	2392	6001	6035			
	49	25781	1.3	I	36.11	3827	2336	5855	6111			
	41	31008	1.1	I	43.43	3425	2223	5600	6152			
	35	36220	0.9	*	50.73	2880	2068	5283	6152			
	33	38426	0.9	*	53.82	2583	2005	5128	6152			
	105	12038	2.6	III	16.86	6287	2363	8361	6716	**SK 72 - 160L/4**	639	209
	81	15507	2.3	III	21.72	6226	2419	8773	7070	SK 72 - 160LH/4		
	82	15450	2.6	III	21.64	6226	2369	8690	7025			
	62	20441	1.8	II	28.63	6107	2430	8847	7441			
	53	23590	1.2	I	33.04	6014	2347	8782	7538			
	40	31208	1.1	I	43.71	5722	2331	8586	7898			
	98	12851	2.6	III	18.00	6275	2351	8433	6770	**SK 73 - 160L/4**	662	212
	86	14722	2.6	III	20.62	6242	2374	8642	6957	SK 73 - 160LH/4		
	76	16664	2.5	III	23.34	6201	2392	8798	7126			
	62	20220	2.2	III	28.32	6113	2392	8852	7382			
	53	23732	1.9	II	33.24	6010	2369	8780	7551			
	47	26867	1.6	II	37.63	5900	2336	8705	7697			
	39	32600	1.5	II	45.66	5659	2250	8543	7848			
	34	37298	1.3	I	52.24	5416	2162	8384	7936			
	29	43167	1.2	I	60.46	5045	2018	8150	8012			
	24	53455	0.9	*	74.87	4160	1746	7632	8012			
	66	19006	3.0	III	26.62	10098	4779	14139	11660	**SK 82 - 160L/4**	880	215
	55	22933	2.5	III	32.12	10042	4950	14099	12195	SK 82 160LH/4		
	44	28880	1.3	I	40.45	9938	5054	14024	12755			
	36	34856	1.4	II	48.82	9808	5162	13932	13298			

(AGMA Class I = f_B 1.0 - 1.39 II = f_B 1.4 - 1.99 III = f_B ≥ 2.0 * = f_B < 1.0) **(Model Type in blue is an Energy Efficient motor)**

Send Quote Requests to info@automatedpt.com
Call +1(800)985-6929 To Order or Order Online At Nordgearmotors.com

20 hp, 25 hp Gearmotors

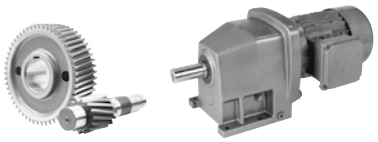

DRIVESYSTEMS

GEARMOTORS

Motor Power P_n [hp]	Output Speed n_2 [rpm]	Output Torque T_2 [lb-in]	Service Factor f_B	AGMA Class	Gear Ratio i_{tot}	Standard Bearings F_{RN} OHL [lb]	Standard Bearings F_{AN} Thrust [lb]	Heavy Duty Bearings (VL) F_{RVL} OHL [lb]	Heavy Duty Bearings (VL) F_{AVL} Thrust [lb]	Model Type	Weight [lb]	Dim. Page
20	54	23218	2.7	III	32.52	10037	4925	14096	12195	**SK 83 - 160L/4**	897	218
	45	27902	2.5	III	39.08	9956	5038	14038	12674	**SK 83 - 160LH/4**		
	40	31686	2.5	III	44.38	9880	5103	13984	13025			
	34	36777	2.1	III	51.51	9758	5162	13898	13363			
	29	44188	1.8	II	61.89	9549	5168	13752	13775			
	25	50149	1.6	II	70.24	9347	5162	13613	14020			
	22	57560	1.4	II	80.62	9052	5103	13412	14294			
	17	74253	1.1	I	104.00	8188	4903	12843	14625			
	38	33250	3.1	III	46.57	14852	9248	20909	18000	**SK 93 - 160L/4**	1292	224
	33	38412	2.8	III	53.80	14796	9504	20869	18000	**SK 93 - 160LH/4**		
	29	44002	2.6	III	61.63	14724	9720	20817	18000			
	24	51741	2.3	III	72.47	14607	9972	20736	18000			
	19	66642	1.9	II	93.34	14328	10280	20538	18000			
	16	77923	1.3	I	109.14	14063	10429	20356	18000			
	14	87854	1.4	II	123.05	13790	10514	20167	18000			
	9.4	134148	0.9	*	187.89	11952	10481	18959	18000			
	22	58117	2.7	III	81.40	22777	15714	27000	26807	**SK 103 - 160L/4**	1775	230
	13	97464	2.1	III	136.51	22280	17219	27000	27000	**SK 103 - 160LH/4**		
	8.5	148127	1.4	II	207.47	21233	18068	27000	27000			
	17	75224	2.4	III	105.36	22592	16490	27000	27000	**SK 103/52 - 160L/4**	1938	235
	14	87404	2.0	III	122.42	22433	16918	27000	27000	**SK 103/52 - 160MH/4**		
	11	110401	1.6	II	154.63	22057	17525	27000	27000			
	9.6	131813	1.3	I	184.62	21623	17865	27000	27000			
	7.2	174758	1.0	I	244.77	20477	18270	27000	27000			
	5.9	211828	0.8	*	296.69	19154	18360	27000	27000			
25	1411	1116	2.2	III	1.24		1134			**SK 51E - 180MX/4**	329	164
	1215	1296	2.1	III	1.44		1204			**SK 51E - 180MH/4**		
	1151	1368	2.0	III	1.52		1235					
	1067	1476	1.9	II	1.64		1274					
	962	1638	1.8	II	1.82		1323					
	850	1854	1.8	II	2.06		1395					
	700	2251	1.7	II	2.50		1503					
	612	2575	1.6	II	2.86		1586					
	529	2980	1.5	II	3.31		1683					
	629	2503	3.1	III	2.78	1478	2446	3996	3872	**SK 52 - 180MX/4**	415	197
	542	2908	2.9	III	3.23	1532	2572	4059	4019	**SK 52 - 180MH/4**		
	515	3061	2.9	III	3.40	1553	2608	4070	4070			
	477	3304	2.8	III	3.67	1582	2682	4088	4142			
	429	3673	2.7	III	4.08	1618	2763	4111	4257			
	400	3943	2.9	III	4.38	1676	2882	4318	4367			
	380	4150	2.5	III	4.61	1663	2853	4106	4374			
	344	4573	2.6	III	5.08	1730	3008	4325	4525			
	313	5041	2.1	III	5.60	1730	3008	4070	4568			
	302	5212	2.4	III	5.79	1782	3123	4316	4664			
	287	5482	2.4	III	6.09	1814	3193	4390	4732			
	273	5779	2.3	III	6.42	1820	3220	4293	4763			
	241	6545	2.1	III	7.27	1863	3319	4241	4903			
	227	6932	2.0	III	7.70	1897	3389	4295	4973			
	198	7949	1.9	II	8.83	1924	3461	4088	5094			
	165	9524	1.6	II	10.58	1996	3636	3980	5294			
	130	12108	1.4	II	13.45	1636	3863	3823	5573			
	125	12603	1.3	I	14.00	1159	3785	3436	5546			
	98	16033	1.1	I	17.81	486	3985	3040	5828			
	89	17645	1.0	I	19.60	86	4023	2795	5904			
	81	19517	0.9	*	21.68			2459	5990			

(AGMA Class I = f_B 1.0 - 1.39 II = f_B 1.4 - 1.99 III = f_B ≥ 2.0 * = f_B < 1.0) **(Model Type in blue is an Energy Efficient motor)**

Send Quote Requests to info@automatedpt.com
Call +1(800)985-6929 To Order or Order Online At Nordgearmotors.com

DRIVESYSTEMS

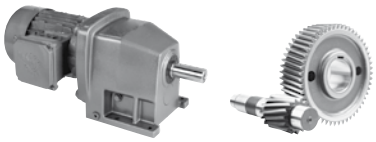

25 hp Gearmotors

Motor Power P_n [hp]	Output Speed n_2 [rpm]	Output Torque T_a [lb-in]	Service Factor f_B	AGMA Class	Gear Ratio i_{tot}	Standard Bearings F_{RN} OHL [lb]	Standard Bearings F_{AN} Thrust [lb]	Heavy Duty Bearings (VL) F_{RVL} OHL [lb]	Heavy Duty Bearings (VL) F_{AVL} Thrust [lb]	Model Type	Weight [lb]	Dim. Page
25	199	7904	3.4	III	8.78	4534	2111	5965	4705	**SK 62 - 180MX/4**	540	203
	166	9497	2.9	III	10.55	4505	2156	6080	4876	SK 62 - 180MH/4		
	151	10434	2.6	III	11.59	4484	2205	6242	5018			
	126	12531	2.2	III	13.92	4430	2230	6266	5173			
	111	14224	1.9	II	15.80	4381	2243	6230	5281			
	96	16330	1.7	II	18.14	4307	2234	6179	5393			
	101	15637	1.8	II	17.37	4331	2176	6197	5281	**SK 63 - 180MX/4**	536	206
	84	18698	1.5	II	20.77	4212	2198	6113	5445	SK 63 - 180MH/4		
	80	19787	1.4	II	21.98	4163	2131	6050	5409			
	67	23658	1.2	I	26.28	3960	2111	5942	5560			
	57	27826	1.1	I	30.91	3683	2030	5715	5596			
	48	32507	1.0	I	36.11	3285	1890	5351	5587			
	40	39097	0.8	*	43.43	2484	1690	4687	5524			
	122	12900	2.8	III	14.33	5902	2183	7857	6320	**SK 72 - 180MX/4**	692	209
	104	15178	2.4	III	16.86	5996	2201	8075	6536	SK 72 - 180MH/4		
	81	19553	1.8	II	21.72	6073	2207	8260	6815			
	81	19481	2.0	III	21.64	5920	2144	8091	6739			
	61	25774	1.4	II	28.63	5940	2162	8267	7092			
	97	16204	2.7	III	18.00	5947	2174	8062	6557	**SK 73 - 180MX/4**	714	212
	85	18563	2.4	III	20.62	5972	2169	8118	6705	SK 73 - 180MH/4		
	75	21011	2.1	III	23.34	5976	2162	8154	6836			
	62	25495	1.7	II	28.32	5893	2108	8143	7025			
	53	29924	1.5	II	33.24	5778	2034	8035	7137			
	47	33876	1.3	I	37.63	5596	1958	7884	7207			
	38	41105	1.2	I	45.66	5184	1787	7517	7265			
	33	47028	1.0	I	52.24	4754	1629	7137	7265			
	29	54428	0.9	*	60.46	4055	1411	6579	7243			
	83	18941	3.7	III	21.04	10098	4403	13453	10850	**SK 83 - 180MX/4**	950	218
	72	21984	3.2	III	24.42	10058	4496	13905	11185	SK 83 - 180MH/4		
	62	25234	2.9	III	28.03	10006	4568	14072	11531			
	54	29276	2.6	III	32.52	9929	4635	14020	11849			
	45	35181	2.3	III	39.08	9799	4687	13928	12254			
	39	39952	2.0	III	44.38	9675	4709	13840	12512			
	34	46371	1.7	II	51.51	9479	4680	13703	12776			
	28	55715	1.4	II	61.89	9131	4613	13464	13066			
	25	63232	1.3	I	70.24	8793	4518	13237	13235			
	22	72577	1.1	I	80.62	8289	4383	12908	13363			
	44	35595	3.0	III	39.54	14828	8660	20891	18000	**SK 93 - 180MX/4**	1345	224
	38	41924	2.6	III	46.57	14751	8915	20837	18000	SK 93 - 180MH/4		
	33	48432	2.2	III	53.80	14659	9101	20772	18000			
	28	55481	2.0	III	61.63	14544	9279	20691	18000			
	24	65240	1.8	II	72.47	14357	9412	20558	18000			
	19	84028	1.5	II	93.34	13901	9565	20243	18000			
	14	110774	1.1	I	123.05	13007	9565	19640	18000			
	25	63358	2.8	III	70.38	22725	14785	27000	25387	**SK 103 - 180MX/4**	1828	230
	21	73279	2.5	III	81.40	22617	15172	27000	26172	SK 103 - 180MH/4		
	17	94848	1.9	II	105.36	22320	15791	27000	27000	**SK 103/52 - 180MX/4**	1991	235
	14	110206	1.6	II	122.42	22061	16099	27000	27000	SK 103/52 - 180MH/4		
	11	139203	1.3	I	154.63	21452	16463	27000	27000			
	9.5	166201	1.1	I	184.62	20736	16623	27000	27000			
	7.1	220350	0.8	*	244.77	18799	16596	27000	27000			

(AGMA Class I = f_B 1.0 - 1.39 II = f_B 1.4 - 1.99 III = f_B ≥ 2.0 * = f_B < 1.0) **(Model Type in blue is an Energy Efficient motor)**

Send Quote Requests to info@automatedpt.com
Call +1(800)985-6929 To Order or Order Online At Nordgearmotors.com

30 hp Gearmotors

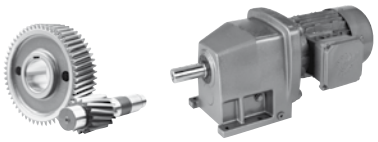

DRIVESYSTEMS

GEARMOTORS

Motor Power P_n [hp]	Output Speed n_2 [rpm]	Output Torque T_2 [lb-in]	Service Factor f_B	AGMA Class	Gear Ratio i_{tot}	Standard Bearings F_{RN} OHL [lb]	Standard Bearings F_{AN} Thrust [lb]	Heavy Duty Bearings (VL) F_{RVL} OHL [lb]	Heavy Duty Bearings (VL) F_{AVL} Thrust [lb]	Model Type	Weight [lb]	Dim. Page
30	1415	1336	1.8	II	1.24		1148			SK 51E - 180LX/4	329	164
	1219	1551	1.7	II	1.44		1213			SK 51E - 180LH/4		
	1155	1637	1.7	II	1.52		1242					
	1070	1767	1.6	II	1.64		1280					
	964	1961	1.5	II	1.82		1334					
	852	2219	1.5	II	2.06		1402					
	702	2693	1.4	II	2.50		1514					
	614	3081	1.3	I	2.86		1595					
	530	3566	1.2	I	3.31		1694					
	631	2995	2.6	III	2.78	1438	2363	3776	3812	SK 52 - 180LX/4	415	197
	543	3480	2.4	III	3.23	1490	2471	3796	3960	SK 52 - 180LH/4		
	516	3663	2.4	III	3.40	1505	2507	3800	4005			
	478	3954	2.4	III	3.67	1530	2558	3798	4070			
	430	4395	2.3	III	4.08	1564	2635	3782	4169			
	401	4719	2.4	III	4.38	1622	2763	3989	4284			
	381	4966	2.1	III	4.61	1602	2716	3740	4277			
	345	5473	2.2	III	5.08	1672	2878	3967	4430			
	313	6033	1.7	II	5.60	1656	2835	3614	4453			
	303	6238	2.0	III	5.79	1712	2966	3913	4552			
	288	6561	2.0	III	6.09	1744	3029	3958	4619			
	273	6916	1.9	II	6.42	1748	3029	3827	4649			
	241	7832	1.8	II	7.27	1778	3123	3708	4763			
	228	8295	1.7	II	7.70	1816	3184	3760	4856			
	199	9513	1.6	II	8.83	1537	3220	3447	4932			
	166	11398	1.4	II	10.58	1148	3350	3231	5110			
	130	14490	1.1	I	13.45	554	3503	2898	5371			
	125	15082	1.1	I	14.00			2428	5319			
	99	19187	0.9	*	17.81			1784	5537			
	90	21115	0.8	*	19.60			1427	5600			
	385	4912	3.3	III	4.56	4223	1796	5056	3938	SK 62 - 180LX/4	540	203
	332	5699	2.9	III	5.29	4309	1834	5173	4066	SK 62 - 180LH/4		
	276	6841	2.5	III	6.35	4415	1872	5290	4226			
	232	8144	3.3	III	7.56	4529	1973	5573	4442			
	200	9459	2.8	III	8.78	4505	2000	5657	4579			
	166	11365	2.4	III	10.55	4462	2018	5720	4721			
	151	12486	2.2	III	11.59	4430	2068	5848	4844			
	126	14996	1.8	II	13.92	4354	2068	5855	4970			
	111	17021	1.6	II	15.80	4280	2052	5814	5049			
	97	19542	1.4	II	18.14	4174	2030	5726	5123			
	101	18713	1.5	II	17.37	4210	1967	5578	5018	SK 63 - 180LX/4	536	206
	84	22375	1.3	I	20.77	4032	1946	5528	5139	SK 63 - 180LH/4		
	80	23679	1.2	I	21.98	3958	1854	5267	5083			
	67	28311	1.0	I	26.28	3647	1798	5081	5173			
	57	33299	1.0	I	30.91	3206	1654	4651	5148			
	49	38901	0.8	*	36.11	2513	1465	4037	5074			
	140	13488	2.7	III	12.52	5526	2034	7423	5985	SK 72 - 180LX/4	692	209
	122	15438	2.3	III	14.33	5573	2041	7533	6149	SK 72 - 180LH/4		
	104	18163	2.0	III	16.86	5609	2039	7632	6309			
	81	23399	1.5	II	21.72	5564	1996	7655	6548			
	81	23313	1.7	II	21.64	5400	1933	7475	6453			
	61	30843	1.2	I	28.63	5346	1881	7477	6739			

(AGMA Class I = f_B 1.0 - 1.39 II = f_B 1.4 - 1.99 III = f_B ≥ 2.0 * = f_B < 1.0) **(Model Type in blue is an Energy Efficient motor)**

Send Quote Requests to info@automatedpt.com
Call +1(800)985-6929 To Order or Order Online At Nordgearmotors.com

DRIVESYSTEMS

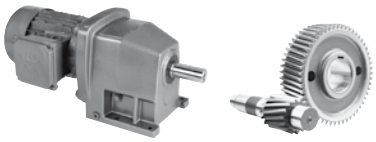

30 hp, 40 hp Gearmotors

Motor Power P_n [hp]	Output Speed n_2 [rpm]	Output Torque T_a [lb-in]	Service Factor f_B	AGMA Class	Gear Ratio i_{tot}	Standard Bearings F_{RN} OHL [lb]	Standard Bearings F_{AN} Thrust [lb]	Heavy Duty Bearings (VL) F_{RVL} OHL [lb]	Heavy Duty Bearings (VL) F_{AVL} Thrust [lb]	Model Type	Weight [lb]	Dim. Page
30	98	19391	2.3	III	18.00	5519	1994	7540	6341	**SK 73 - 180LX/4**	714	212
	85	22214	2.0	III	20.62	5474	1973	7542	6442	**SK 73 - 180LH/4**		
	75	25144	1.8	II	23.34	5407	1933	7511	6536			
	62	30509	1.5	II	28.32	5209	1827	7319	6674			
	53	35809	1.2	I	33.24	4968	1710	7072	6716			
	47	40539	1.1	I	37.63	4673	1595	6813	6739			
	38	49189	1.0	I	45.66	4093	1341	6163	6685			
	34	56278	0.9	*	52.24	3546	1116	5567	6611			
	29	65133	0.8	*	60.46	2439	815	4707	6473			
	83	22666	3.1	III	21.04	10046	4217	13140	10573	**SK 83 - 180LX/4**	950	218
	72	26308	2.7	III	24.42	9986	4277	13527	10883	**SK 83 - 180LH/4**		
	63	30197	2.4	III	28.03	9911	4320	13739	11185			
	54	35034	2.2	III	32.52	9803	4340	13930	11457			
	45	42101	1.9	II	39.08	9612	4340	13795	11792			
	40	47810	1.6	II	44.38	9430	4298	13669	12002			
	34	55492	1.4	II	51.51	9140	4210	13471	12175			
	28	66674	1.2	I	61.89	8618	4046	13122	12373			
	25	75669	1.0	I	70.24	8100	3879	12787	12431			
	22	86852	0.9	*	80.62	7299	3650	12296	12431			
	44	42596	2.5	III	39.54	14742	8345	20435	18000	**SK 93 - 180LX/4**	1345	224
	38	50170	2.2	III	46.57	14632	8550	20754	18000	**SK 93 - 180LH/4**		
	33	57959	1.9	II	53.80	14499	8674	20660	18000			
	28	66394	1.7	II	61.63	14333	8771	20543	18000			
	24	78072	1.5	II	72.47	14058	8856	20351	18000			
	19	100555	1.2	I	93.34	13385	8843	19892	18000			
	14	132561	0.9	*	123.05	12033	8604	19010	18000			
	33	57075	3.1	III	52.98	22786	13604	27000	23319	**SK 103 - 180LX/4**	1828	230
	29	65403	2.7	III	60.71	22705	13957	27000	24041	**SK 103 - 180LH/4**		
	25	75820	2.3	III	70.38	22586	14297	27000	24784			
	22	87692	2.1	III	81.40	22428	14598	27000	25468			
	17	113504	1.6	II	105.36	22001	15050	27000	26638	**SK 103/52 - 180LX/4**	1991	235
	14	131883	1.3	I	122.42	21620	15293	27000	27000	**SK 103/52 - 180LH/4**		
	11	166582	1.1	I	154.63	20725	15442	27000	27000			
	9.5	198891	0.9	*	184.62	19654	15343	27000	27000			
40	599	4206	3.3	III	2.97	3701	1580	4451	3458	**SK 62 - 200L/4**	697	203
	539	4674	3.2	III	3.30	3776	1604	4520	3537	**SK 62 - 200LH/4**		
	478	5269	3.1	III	3.72	3832	1629	4604	3629			
	455	5538	3.0	III	3.91	3861	1638	4633	3665			
	440	5736	2.9	III	4.05	3884	1647	4646	3688			
	390	6459	2.8	III	4.56	3931	1665	4709	3778			
	336	7493	2.2	III	5.29	3987	1681	4777	3877			
	280	8994	1.9	II	6.35	4041	1692	4808	3989			
	235	10708	2.6	III	7.56	4246	1784	5056	4205			
	203	12436	2.1	III	8.78	4259	1782	5063	4309			
	169	14943	1.8	II	10.55	4226	1760	4995	4399			
	154	16416	1.7	II	11.59	4304	1798	5096	4507			
	128	19716	1.4	II	13.92	4165	1744	4946	4579			

(AGMA Class I = f_B 1.0 - 1.39 II = f_B 1.4 - 1.99 III = f_B ≥ 2.0 * = f_B < 1.0) **(Model Type in blue is an Energy Efficient motor)**

Send Quote Requests to info@automatedpt.com
Call +1(800)985-6929 To Order or Order Online At Nordgearmotors.com

40 hp, 50 hp Gearmotors

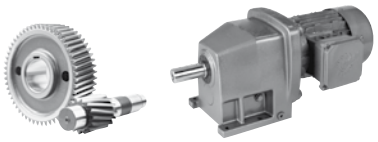

DRIVESYSTEMS

GEARMOTORS

Motor Power P_n [hp]	Output Speed n_2 [rpm]	Output Torque T_2 [lb-in]	Service Factor f_B	AGMA Class	Gear Ratio i_{tot}	Standard Bearings F_{RN} OHL [lb]	Standard Bearings F_{AN} Thrust [lb]	Heavy Duty Bearings (VL) F_{RVL} OHL [lb]	Heavy Duty Bearings (VL) F_{AVL} Thrust [lb]	Model Type	Weight [lb]	Dim. Page
40	318	7932	2.9	III	5.60	4435	1636	5882	4736	**SK 72 - 200L/4**	849	209
	277	9093	2.7	III	6.42	4498	1649	6057	4874	SK 72 - 200LH/4		
	256	9844	3.3	III	6.95	4718	1739	6271	5049			
	217	11600	3.1	III	8.19	4793	1755	6451	5213			
	188	13399	2.9	III	9.46	4831	1764	6541	5348			
	164	15354	2.7	III	10.84	4842	1757	6595	5470			
	142	17733	2.0	III	12.52	4950	1793	6761	5677			
	124	20297	1.8	II	14.33	4937	1769	6770	5787			
	106	23880	1.5	II	16.86	4851	1721	6714	5879			
	99	25495	1.7	II	18.00	4662	1645	6527	5852	**SK 73 - 200L/4**	871	212
	86	29206	1.5	II	20.62	4509	1566	6372	5909	SK 73 - 200LH/4		
	76	33058	1.3	I	23.34	4298	1474	6170	5936			
	63	40112	1.1	I	28.32	3870	1287	5688	5936			
	54	47080	0.9	*	33.24	3364	1073	5153	5870			
	47	53298	0.8	*	37.63	2842	866	4552	5787			
	125	20240	2.9	III	14.29	9394	3751	11673	9405	**SK 82 - 200L/4**	1089	215
	107	23455	2.5	III	16.56	9547	3805	12006	9698	SK 82 - 200LH/4		
	85	29801	2.4	III	21.04	9668	3843	12285	10060	**SK 83 - 200L/4**	1107	218
	73	34588	2.0	III	24.42	9720	3843	12377	10307	SK 83 - 200LH/4		
	64	39701	1.8	II	28.03	9682	3812	12413	10523			
	55	46061	1.6	II	32.52	9488	3762	12393	10692			
	46	55352	1.4	II	39.08	9146	3650	12179	10883			
	40	62859	1.3	I	44.38	8811	3506	11900	10953			
	35	72958	1.1	I	51.51	8267	3305	11450	10989			
	29	87660	0.9	*	61.89	7234	2959	10645	10953			
	66	38313	2.8	III	27.05	14796	7400	18124	16241	**SK 93 - 200L/4**	1502	224
	57	44262	2.4	III	31.25	14720	7544	18428	16715	SK 93 - 200LH/4		
	45	56004	1.9	II	39.54	14535	7729	18878	17485			
	38	65961	1.6	II	46.57	14342	7803	19026	18000			
	33	76201	1.4	II	53.80	14105	7841	19058	18000			
	29	87292	1.3	I	61.63	13806	7828	18986	18000			
	25	102645	1.2	I	72.47	13311	7740	18671	18000			
	47	53681	3.3	III	37.90	22817	12159	26008	20909	**SK 103 - 200L/4**	1985	230
	39	64091	2.8	III	45.25	22718	12535	26924	21731	SK 103 - 200LH/4		
	34	75040	2.4	III	52.98	22595	12861	27000	22403			
	29	85988	2.1	III	60.71	22453	13091	27000	22912			
	25	99685	1.8	II	70.38	22244	13302	27000	23506			
	22	115293	1.6	II	81.40	21965	13473	27000	24041			
50	594	5303	2.6	III	2.97	3530	1499	4244	3359	**SK 62 - 225S/4**	770	203
	535	5893	2.5	III	3.30	3578	1512	4280	3431	SK 62 - 225SH/4		
	474	6643	2.4	III	3.72	3614	1528	4325	3508			
	451	6982	2.3	III	3.91	3641	1530	4343	3537			
	436	7232	2.3	III	4.05	3636	1532	4361	3560			
	387	8143	2.2	III	4.56	3659	1541	4367	3629			
	334	9446	1.8	II	5.29	3681	1535	4370	3699			
	278	11339	1.5	II	6.35	3645	1514	4320	3785			
	233	13499	2.0	III	7.56	3834	1598	4538	3989			
	201	15678	1.7	II	8.78	3773	1562	4439	4055			
	167	18839	1.5	II	10.55	3652	1496	4237	4079			
	152	20696	1.3	I	11.59	3724	1526	4327	4185			
	127	24856	1.1	I	13.92	3479	1420	3978	4185			

(AGMA Class I = f_B 1.0 - 1.39 II = f_B 1.4 - 1.99 III = f_B ≥ 2.0 * = f_B < 1.0) **(Model Type in blue is an Energy Efficient motor)**

Send Quote Requests to info@automatedpt.com
Call +1(800)985-6929 To Order or Order Online At Nordgearmotors.com

DRIVESYSTEMS

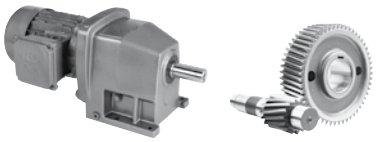

50 hp, 60 hp Gearmotors

Motor Power P_n [hp]	Output Speed n_2 [rpm]	Output Torque T_a [lb-in]	Service Factor f_B	AGMA Class	Gear Ratio i_{tot}	Standard Bearings F_{RN} OHL [lb]	Standard Bearings F_{AN} Thrust [lb]	Heavy Duty Bearings (VL) F_{RVL} OHL [lb]	Heavy Duty Bearings (VL) F_{AVL} Thrust [lb]	Model Type	Weight [lb]	Dim. Page
50	315	10000	2.3	III	5.60	4131	1505	5603	4586	SK 72 - 225S/4	922	209
	275	11464	2.1	III	6.42	4156	1501	5648	4682	SK 72 - 225SH/4		
	254	12410	2.6	III	6.95	4392	1602	5949	4883			
	216	14624	2.4	III	8.19	4401	1595	6017	5009			
	187	16892	2.3	III	9.46	4390	1571	6014	5123			
	163	19356	2.1	III	10.84	4318	1539	5976	5198			
	141	22356	1.6	II	12.52	4379	1555	6082	5357			
	123	25588	1.4	II	14.33	4253	1501	5974	5427			
	105	30106	1.2	I	16.86	4048	1397	5762	5470			
	98	32142	1.4	II	18	3785	1287	5479	5400	SK 73 - 225S/4	944	212
	86	36820	1.2	I	20.62	3485	1152	5159	5391	SK 73 - 225SH/4		
	76	41677	1.1	I	23.34	3130	1010	4754	5348			
	62	50569	0.9	*	28.32	2417	716	3949	5231			
	171	18446	2.5	III	10.33	8485	3391	10580	8516	SK 82 - 225S/4	1162	215
	149	21142	2.4	III	11.84	8618	3434	10854	8766	SK 82 - 225SH/4		
	124	25517	2.3	III	14.29	8809	3506	11151	9079			
	107	29570	2.0	III	16.56	8885	3517	11286	9315			
	84	37570	1.9	II	21.04	8818	3456	11273	9603	SK 83 - 225S/4	1180	218
	72	43605	1.6	II	24.42	8732	3402	11246	9758	SK 83 - 225SH/4		
	63	50052	1.4	II	28.03	8548	3305	11070	9902			
	54	58069	1.3	I	32.52	8269	3170	10825	9963			
	45	69783	1.1	I	39.08	7749	2925	10215	9997			
	40	79247	1.0	I	44.38	7259	2700	9655	9947			
	34	91978	0.9	*	51.51	6464	2383	8793	9821			
	92	34141	2.8	III	19.12	14843	6701	16382	14679	SK 93 - 225S/4	1574	224
	77	41016	2.6	III	22.97	14765	6874	16787	15255	SK 93 - 225SH/4		
	65	48302	2.2	III	27.05	14661	6986	17055	15752			
	56	55801	1.9	II	31.25	14540	7065	17231	16162			
	45	70604	1.5	II	39.54	14240	7121	17305	16796			
	38	83157	1.3	I	46.57	13923	7099	17231	17152			
	33	96068	1.1	I	53.80	13536	7009	16895	17399			
	29	110049	1.0	I	61.63	13037	6874	16454	17568			
	24	129405	0.9	*	72.47	12191	6638	15662	17710			
	83	37838	2.9	III	21.19	22714	10526	22318	17955	SK 103 - 225S/4	2057	230
	70	45177	2.7	III	25.30	22885	10904	23204	18662	SK 103 - 225SH/4		
	60	52891	2.5	III	29.62	22824	11205	24008	19298			
	47	67676	2.6	III	37.90	22680	11664	25153	20284			
	39	80800	2.2	III	45.25	22523	11927	25963	20943			
	33	94603	1.9	II	52.98	22325	12141	26566	21524			
	29	108406	1.6	II	60.71	22093	12258	27000	21942			
	25	125673	1.4	II	70.38	21755	12357	27000	22329			
	22	145351	1.2	I	81.40	21303	12357	27000	22655			
60	596	6345	2.7	III	2.97	3362	1413	4012	3260	SK 62 - 225M/4	842	203
	536	7050	2.5	III	3.30	3375	1420	4032	3317	SK 62 - 225MH/4		
	476	7947	2.3	III	3.72	3391	1422	4039	3382			
	453	8353	2.1	III	3.91	3391	1420	4055	3404			
	437	8652	1.9	II	4.05	3404	1420	4052	3420			
	388	9742	1.9	II	4.56	3386	1409	4016	3470			
	335	11301	1.5	II	5.29	3359	1391	3956	3521			
	234	16151	1.7	II	7.56	3425	1411	4010	3760			
	202	18757	1.4	II	8.78	3299	1350	3832	3778			
	153	24760	1.1	I	11.59	3114	1258	3512	3857			

(AGMA Class I = f_B 1.0 - 1.39 II = f_B 1.4 - 1.99 III = f_B ≥ 2.0 * = f_B < 1.0) **(Model Type in blue is an Energy Efficient motor)**

Send Quote Requests to info@automatedpt.com
Call +1(800)985-6929 To Order or Order Online At Nordgearmotors.com

60 hp Gearmotors

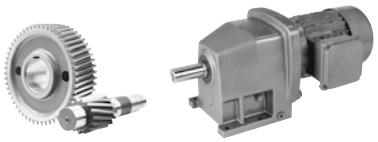

DRIVESYSTEMS

GEARMOTORS

Motor Power P_n [hp]	Output Speed n_2 [rpm]	Output Torque T_2 [lb-in]	Service Factor f_B	AGMA Class	Gear Ratio i_{tot}	Standard Bearings F_{RN} OHL [lb]	Standard Bearings F_{AN} Thrust [lb]	Heavy Duty Bearings (VL) F_{RVL} OHL [lb]	Heavy Duty Bearings (VL) F_{AVL} Thrust [lb]	Model Type	Weight [lb]	Dim. Page
60	430	8802	2.7	III	4.12	3814	1391	5162	4199	**SK 72 - 225M/4**	994	209
	365	10361	2.5	III	4.85	3839	1388	5220	4316	SK 72 - 225MH/4		
	316	11963	2.1	III	5.60	3825	1375	5245	4406			
	276	13715	1.8	II	6.42	3789	1357	5231	4491			
	255	14848	2.6	III	6.95	4059	1463	5560	4698			
	216	17497	2.4	III	8.19	4003	1427	5535	4797			
	187	20210	2.1	III	9.46	3915	1382	5470	4874			
	163	23158	1.8	II	10.84	3791	1328	5348	4921			
	141	26747	1.3	I	12.52	3798	1316	5409	5056			
	124	30614	1.2	I	14.33	3605	1224	5182	5074			
	98	38454	1.2	I	18.00	2907	941	4399	4946	**SK 73 - 225M/4**	1017	212
	86	44051	1.0	I	20.62	2448	752	3904	4874	SK 73 - 225MH/4		
	76	49862	0.9	*	23.34	1847	554	3337	4775			
	286	13224	2.9	III	6.19	7349	2939	9126	7335	**SK 82 - 225M/4**	1235	215
	240	15788	3.5	III	7.39	7767	3105	9641	7760	SK 82 - 225MH/4		
	201	18842	3.1	III	8.82	7940	3170	9968	8026			
	171	22068	2.8	III	10.33	8060	3200	10206	8273			
	149	25294	2.5	III	11.84	8134	3231	10310	8474			
	124	30528	1.9	II	14.29	8251	3247	10490	8766			
	107	35378	1.6	II	16.56	8251	3231	10517	8951			
	84	44948	1.6	II	21.04	7947	3080	10276	9124	**SK 83 - 225M/4**	1252	218
	72	52169	1.4	II	24.42	7722	2959	10031	9227	SK 83 - 225MH/4		
	63	59881	1.2	I	28.03	7385	2806	9682	9241			
	54	69474	1.1	I	32.52	6919	2590	9167	9227			
	40	94811	0.8	*	44.38	5328	1924	7387	8951			
	143	26469	3.5	III	12.39	13505	6057	14796	13100	**SK 92 - 225M/4**	1623	221
	123	30678	3.1	III	14.36	13865	6203	15161	13527	SK 92 - 225MH/4		
	107	35185	2.7	III	16.47	14180	6325	15458	13923			
	93	40847	2.6	III	19.12	14391	6406	15644	14308	**SK 93 - 225M/4**	1647	224
	77	49072	2.2	III	22.97	14650	6509	15887	14798	SK 93 - 225MH/4		
	65	57788	1.9	II	27.05	14504	6572	16038	15208			
	57	66760	1.6	II	31.25	14324	6584	15991	15552			
	45	84471	1.3	I	39.54	13887	6521	15732	16009			
	38	99489	1.1	I	46.57	13421	6377	15311	16241			
	33	114935	0.9	*	53.80	12841	6185	14706	16371			
	29	131662	0.9	*	61.63	12078	5931	13905	16452			
	84	45269	3.9	III	21.19	22124	10226	21834	17559	**SK 103 - 225M/4**	2130	230
	70	54049	3.3	III	25.30	22813	10544	22655	18277	SK 103 - 225MH/4		
	60	63278	2.8	III	29.62	22727	10798	23312	18842			
	47	80967	2.2	III	37.90	22520	11169	24311	19643			
	39	96669	1.8	II	45.25	22293	11313	24939	20153			
	33	113183	1.6	II	52.98	22005	11405	25344	20576			
	29	129697	1.4	II	60.71	21670	11423	25360	20878			
	25	150355	1.2	I	70.38	21175	11387	25085	21112			

(AGMA Class I = f_B 1.0 - 1.39 II = f_B 1.4 - 1.99 III = f_B ≥ 2.0 * = f_B < 1.0) **(Model Type in blue is an Energy Efficient motor)**

Send Quote Requests to info@automatedpt.com
Call +1(800)985-6929 To Order or Order Online At Nordgearmotors.com

DRIVESYSTEMS

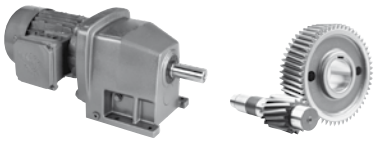

75 hp, 100 hp Gearmotors

Motor Power P_n [hp]	Output Speed n_2 [rpm]	Output Torque T_a [lb-in]	Service Factor f_B	AGMA Class	Gear Ratio i_{tot}	Standard Bearings F_{RN} OHL [lb]	Standard Bearings F_{AN} Thrust [lb]	Heavy Duty Bearings (VL) F_{RVL} OHL [lb]	Heavy Duty Bearings (VL) F_{AVL} Thrust [lb]	Model Type	Weight [lb]	Dim. Page
75	617	7666	3.6	III	2.89	6203	2495	7508	6032	**SK 82 - 250M/4**	1641	215
	492	9603	3.6	III	3.62	6451	2590	7911	6350	**SK 82 - 250MH/4**		
	402	11751	3.3	III	4.43	6662	2666	8253	6642			
	337	14033	3.0	III	5.29	6811	2723	8557	6881			
	288	16420	2.3	III	6.19	6914	2747	8753	7094			
	241	19603	2.8	III	7.39	7310	2907	9241	7490			
	202	23397	2.5	III	8.82	7400	2925	9394	7722			
	173	27402	2.2	III	10.33	7432	2925	9468	7922			
	151	31408	2.0	III	11.84	7407	2903	9473	8078			
	125	37907	1.5	II	14.29	7396	2873	9491	8273			
	108	43928	1.3	I	16.56	7229	2806	9362	8379			
	144	32867	2.9	III	12.39	12922	5771	14096	12728	**SK 92 - 250M/4**	2029	221
	124	38092	2.5	III	14.36	13185	5875	14342	13122	**SK 92 - 250MH/4**		
	108	43690	2.1	III	16.47	13442	5951	14515	13464			
	93	50719	2.1	III	19.12	13498	5960	14558	13748	**SK 93 - 250M/4**	2053	224
	78	60932	1.8	II	22.97	13590	5999	14537	14150	**SK 93 - 250MH/4**		
	66	71755	1.5	II	27.05	13588	5951	14400	14425			
	57	82896	1.3	I	31.25	13514	5875	14128	14657			
	45	104887	1.0	I	39.54	12998	5616	13340	14870			
	38	123535	0.9	*	46.57	12467	5319	12470	14895			
	33	142714	0.8	*	53.80	11486	4964	11356	14870			
	84	56210	3.1	III	21.19	21242	9779	21103	17030	**SK 103 - 250M/4**	2536	230
	70	67113	2.6	III	25.30	21796	10015	21773	17559	**SK 103 - 250MH/4**		
	60	78572	2.3	III	29.62	22192	10195	22309	18014			
	47	100536	1.8	II	37.90	22230	10357	22984	18662			
	39	120033	1.5	II	45.25	21872	10393	23027	19053			
	34	140539	1.3	I	52.98	21420	10325	22687	19238			
	29	161044	1.1	I	60.71	20885	10195	22138	19330			
	25	186695	0.9	*	70.38	20088	9983	21272	19330			
100	619	10187	2.7	III	2.89	5866	2349	7265	5843	**SK 82 - 280S/4**	2026	215
	494	12760	2.7	III	3.62	6055	2410	7603	6120	**SK 82 - 280SH/4**		
	404	15615	2.5	III	4.43	6167	2437	7790	6350			
	338	18647	2.3	III	5.29	6206	2448	7889	6536			
	289	21819	1.7	II	6.19	6208	2432	7936	6685			
	242	26049	2.1	III	7.39	6563	2585	8379	7083			
	203	31089	1.9	II	8.82	6498	2536	8350	7232			
	173	36412	1.7	II	10.33	6377	2468	8244	7324			
	151	41734	1.5	II	11.84	6221	2383	8066	7385			
	125	50370	1.2	I	14.29	5942	2266	7801	7490			
	108	58372	1.0	I	16.56	5540	2075	7362	7466			
	315	20021	2.5	III	5.68	10447	4671	11412	10220	**SK 92 - 280S/4**	2414	221
	267	23617	2.4	III	6.70	10719	4793	11680	10550	**SK 92 - 280SH/4**		
	230	27423	2.0	III	7.78	10940	4862	11894	10879			
	170	37011	2.4	III	10.50	11795	5252	12782	11804			
	144	43673	2.1	III	12.39	11977	5310	12933	12150			
	125	50617	1.9	II	14.36	12085	5335	13012	12445			
	109	58055	1.6	II	16.47	12134	5335	12956	12688			
	94	67396	1.6	II	19.12	11977	5252	12647	12850	**SK 93 - 280S/4**	2439	224
	78	80966	1.3	I	22.97	11779	5110	12251	13039	**SK 93 - 280SH/4**		
	66	95348	1.1	I	27.05	11421	4941	11696	13165			
	57	110152	1.0	I	31.25	10978	4700	10931	13165			
	45	139373	0.8	*	39.54	9538	4115	9232	13039			

(AGMA Class I = f_B 1.0 - 1.39 II = f_B 1.4 - 1.99 III = f_B ≥ 2.0 * = f_B < 1.0) **(Model Type in blue is an Energy Efficient motor)**

Send Quote Requests to info@automatedpt.com
Call +1(800)985-6929 To Order or Order Online At Nordgearmotors.com

100 hp, 125 hp Gearmotors

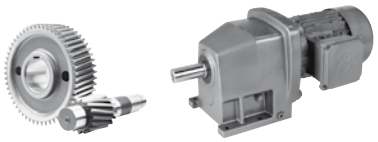

DRIVESYSTEMS

GEARMOTORS

Motor Power P_n [hp]	Output Speed n_2 [rpm]	Output Torque T_2 [lb-in]	Service Factor f_B	AGMA Class	Gear Ratio i_{tot}	Standard Bearings F_{RN} OHL [lb]	Standard Bearings F_{AN} Thrust [lb]	Heavy Duty Bearings (VL) F_{RVL} OHL [lb]	Heavy Duty Bearings (VL) F_{AVL} Thrust [lb]	Model Type	Weight [lb]	Dim. Page
100	342	18435	2.9	III	5.23	15197	7049	14882	11932	**SK 102 - 280S/4**	2902	227
	287	21995	2.8	III	6.24	15811	7315	15509	12458	SK 102 - 280SH/4		
	238	26437	2.7	III	7.50	16445	7601	16164	12989			
	180	35108	2.9	III	9.96	17755	8237	17496	14074			
	151	41875	2.8	III	11.88	18360	8492	18167	14625			
	125	50370	2.7	III	14.29	18936	8753	18824	15174			
	108	58619	2.5	III	16.63	19400	8937	19375	15617			
	92	68277	2.2	III	19.37	19784	9113	19834	16025			
	84	74692	2.4	III	21.19	19751	9054	19899	16101	**SK 103 - 280S/4**	2922	230
	71	89179	2.0	III	25.30	20059	9155	20329	16520	SK 103 - 280SH/4		
	60	104407	1.7	II	29.62	20131	9200	20351	16760			
	47	133593	1.3	I	37.90	19919	9068	19836	17030			
	40	159500	1.1	I	45.25	18979	8852	19028	17084			
	34	186748	0.9	*	52.98	17782	8532	17917	17030			
	29	213995	0.8	*	60.71	16241	8145	16621	16760			
125	509	15483	3.1	III	3.51	9234	4136	10112	8946	**SK 92 - 280M/4**	2525	221
	314	25054	2.5	III	5.68	9950	4424	10809	9911	SK 92 - 280MH/4		
	267	29553	2.3	III	6.70	10134	4487	10953	10220			
	230	34317	1.6	II	7.78	10249	4525	11041	10467			
	170	46315	1.9	II	10.50	10991	4847	11788	11322			
	144	54651	1.7	II	12.39	11014	4847	11736	11579			
	124	63341	1.5	II	14.36	10978	4799	11576	11786			
	108	72648	1.3	I	16.47	10841	4716	11351	11918			
	341	23069	3.2	III	5.23	14778	6860	14569	11705	**SK 102 - 280M/4**	3012	227
	286	27524	3.0	III	6.24	15323	7083	15136	12182	SK 102 - 280MH/4		
	238	33082	2.8	III	7.50	15854	7315	15721	12638			
	179	43933	3.0	III	9.96	17100	7900	17008	13673			
	150	52402	2.7	III	11.88	17577	8091	17537	14139			
	125	63032	2.3	III	14.29	18014	8276	18068	14625			
	107	73353	2.1	III	16.63	18302	8397	18459	14933			
	92	85439	1.7	II	19.37	18529	8492	18783	15248			
	84	93467	1.9	II	21.19	18284	8343	18527	15224	**SK 103 - 280M/4**	3032	230
	71	111596	1.6	II	25.30	18266	8316	18286	15419	SK 103 - 280MH/4		
	60	130651	1.4	II	29.62	17861	8170	17784	15543			
	47	167173	1.1	I	37.90	16229	7787	16391	15444			
	39	199593	0.9	*	45.25	14474	7315	14895	15224			
	34	233690	0.8	*	52.98	12386	6730	12929	14767			

(AGMA Class I = f_B 1.0 - 1.39 II = f_B 1.4 - 1.99 III = f_B ≥ 2.0 * = f_B < 1.0) **(Model Type in blue is an Energy Efficient motor)**

Send Quote Requests to info@automatedpt.com
Call +1(800)985-6929 To Order or Order Online At Nordgearmotors.com

DRIVESYSTEMS

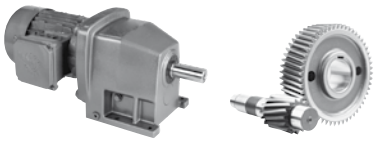

150 hp, 175 hp, 200 hp Gearmotors

Motor Power P_n [hp]	Output Speed n_2 [rpm]	Output Torque T_a [lb-in]	Service Factor f_B	AGMA Class	Gear Ratio i_{tot}	Standard Bearings F_{RN} OHL [lb]	Standard Bearings F_{AN} Thrust [lb]	Heavy Duty Bearings (VL) F_{RVL} OHL [lb]	Heavy Duty Bearings (VL) F_{AVL} Thrust [lb]	Model Type	Weight [lb]	Dim. Page
150	509	18558	2.6	III	3.51	8919	3978	9740	8746	**SK 92 - 315S/4**	2900	221
	315	30033	2.1	III	5.68	9441	4176	10190	9583	**SK 92 - 315SH/4**		
	267	35427	1.9	II	6.70	9527	4203	10220	9833			
	230	41137	1.3	I	7.78	9545	4187	10179	10040			
	170	55519	1.6	II	10.5	10204	4466	10809	10861			
	144	65513	1.4	II	12.39	10069	4381	10517	11000			
	125	75929	1.3	I	14.36	9853	4264	10152	11106			
	109	87086	1.1	I	16.47	9583	4115	9716	11196			
	342	27654	2.7	III	5.23	14416	6656	14240	11462	**SK 102 - 315S/4**	3387	227
	287	32994	2.5	III	6.24	14846	6860	14742	11873	**SK 102 - 315SH/4**		
	238	39657	2.3	III	7.50	15280	7027	15235	12301			
	180	52664	2.5	III	9.96	16430	7589	16472	13262			
	151	62816	2.2	III	11.88	16790	7711	16891	13651			
	125	75559	1.9	II	14.29	17062	7823	17276	14051			
	108	87932	1.7	II	16.63	17240	7850	17435	14254			
	92	102420	1.5	II	19.37	17231	7837	17267	14486			
	84	112043	1.6	II	21.19	16745	7625	16686	14324	**SK 103 - 315S/4**	3407	230
	71	133775	1.3	I	25.30	15962	7445	16027	14346	**SK 103 - 315SH/4**		
	60	156617	1.1	I	29.62	14906	7175	15059	14324			
	47	200398	0.9	*	37.90	12411	6518	12926	13894			
175	510	21627	2.3	III	3.51	8600	3834	9351	8566	**SK 92 - 315M/4**	3076	221
	315	34999	1.8	II	5.68	8937	3929	9572	9281	**SK 92 - 315MH/4**		
	267	41284	1.7	II	6.70	8921	3915	9486	9477			
	230	47938	1.1	I	7.78	8852	3848	9320	9614			
	170	64698	1.4	II	10.50	9380	4077	9743	10350			
	144	76344	1.2	I	12.39	9117	3922	9277	10433			
	125	88483	1.1	I	14.36	8721	3733	8701	10451			
	418	26372	3.2	III	4.28	13523	6262	13379	10784	**SK 102 - 315M/4**	3563	227
	342	32226	2.9	III	5.23	13993	6455	13919	11225	**SK 102 - 315MH/4**		
	287	38449	2.6	III	6.24	14380	6613	14337	11574			
	239	46213	2.2	III	7.50	14697	6750	14765	11932			
	180	61371	2.2	III	9.96	15782	7245	15899	12863			
	151	73202	1.9	II	11.88	16022	7326	16241	13176			
	125	88051	1.7	II	14.29	16115	7362	16326	13478			
	108	102470	1.5	II	16.63	16081	7315	16090	13628			
	92	119353	1.2	I	19.37	15680	7209	15651	13673			
200	510	24717	2.0	III	3.51	8289	3683	8978	8377	**SK 92 - 315MA/4**	3407	221
	315	39998	1.6	II	5.68	8417	3683	8930	8973			
	267	47180	1.5	II	6.70	8321	3614	8717	9133			
	230	54786	1.0	I	7.78	8161	3512	8406	9223			
	170	73940	1.2	I	10.50	8532	3683	8703	9864			
	144	87249	1.1	I	12.39	8109	3467	8015	9864			
	125	101121	0.9	*	14.36	7576	3195	7205	9801			
	418	30139	2.8	III	4.28	13192	6084	13097	10562	**SK 102 - 315MA/4**	3894	227
	342	36829	2.5	III	5.23	13601	6262	13579	10958			
	287	43941	2.3	III	6.24	13928	6383	13961	11279			
	239	52814	1.9	II	7.50	14130	6464	14303	11574			
	180	70137	1.9	II	9.96	15125	6928	15365	12458			
	151	83657	1.7	II	11.88	15203	6937	15383	12701			
	125	100628	1.5	II	14.29	15152	6883	15075	12863			
	108	117106	1.3	I	16.63	14641	6784	14623	12947			
	92	136401	1.1	I	19.37	13912	6581	13943	12884			

(AGMA Class I = f_B 1.0 - 1.39 II = f_B 1.4 - 1.99 III = f_B ≥ 2.0 * = f_B < 1.0) **(Model Type in blue is an Energy Efficient motor)**

Send Quote Requests to info@automatedpt.com
Call +1(800)985-6929 To Order or Order Online At Nordgearmotors.com

Notes

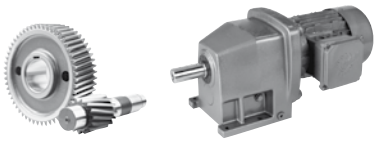

NORD DRIVESYSTEMS

NOTES

Send Quote Requests to info@automatedpt.com
Call +1(800)985-6929 To Order or Order Online At Nordgearmotors.com

Send Quote Requests to info@automatedpt.com
Call +1(800)985-6929 To Order or Order Online At Nordgearmotors.com

In-line Helical Reducers
Selections & Combinations

Selection

- SK 02
- SK 03
- SK 11E
- SK 12
- SK 13
- SK 12/02
- SK 21E
- SK 22
- SK 23
- SK 22/02
- SK 31E
- SK 32
- SK 33N
- SK 32/12
- SK 41E
- SK 42
- SK 43
- SK 42/12
- SK 51E
- SK 52
- SK 53
- SK 52/12
- SK 62
- SK 63
- SK 63/22
- SK 63/23
- SK 72
- SK 73
- SK 73/22
- SK 73/23
- SK 73/32
- SK 82
- SK 83
- SK 83/32
- SK 83/33
- SK 83/42
- SK 92
- SK 93
- SK 93/42
- SK 93/43
- SK 93/52
- SK 102
- SK 103
- SK 103/52
- SK 103/53

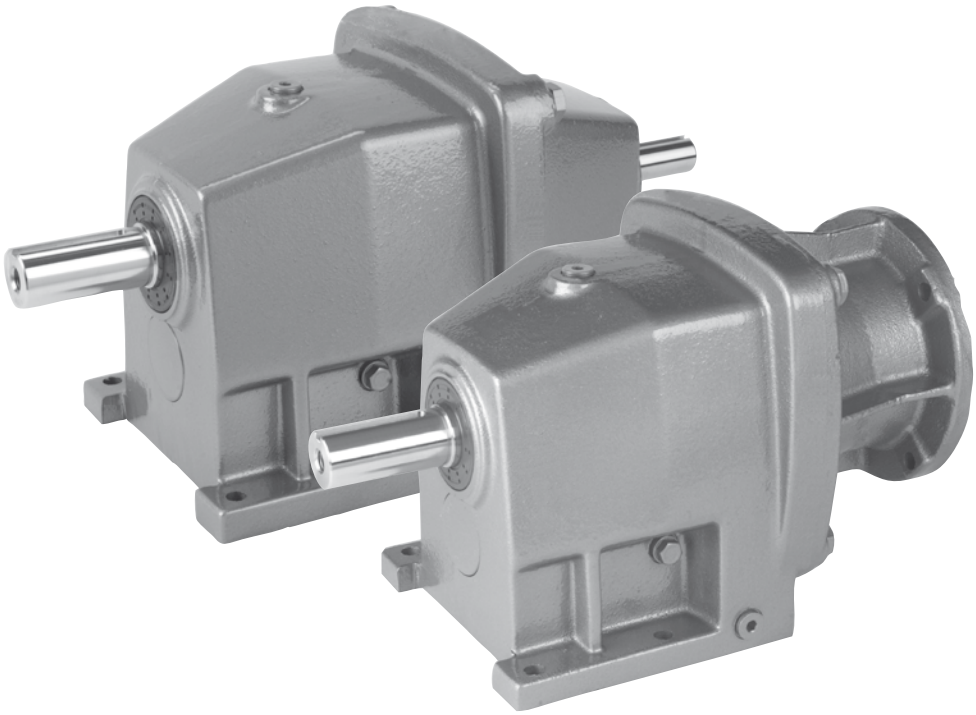

NORD® DRIVESYSTEMS

www.nord.com

UNICASE™

Model Type	Gear Ratio i_{tot}	Output Speed n_2 1750 rpm [rpm]	Output Torque* $T_{2\,max}$ [lb-in]	Maximu Solid input 1750 rpm [hp]	Inpu 1150 r [hp]
SK 02	2.95	593	407	2.00	1.32
	3.38	518	451	2.00	1.32
	3.89	450	469	2.00	1.32
	4.22	415	460	2.00	1.32
	4.82	363	504	2.00	1.32
	5.57	314	504	2.00	1.32
	6.10	287	504	2.00	1.32
	6.89	254	540	2.00	1.32
	7.80	224	558	1.98	1.31
	8.19	214	558	1.89	1.25
	9.28	189	575	1.73	1.14
	9.95	176	566	1.58	1.04
	11.27	155	593	1.46	0.96
	12.82	137	620	1.35	0.89
	15.95	110	637	1.11	0.7
	20.59	85	655	0.88	

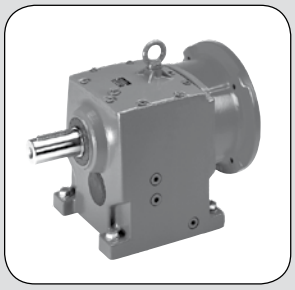

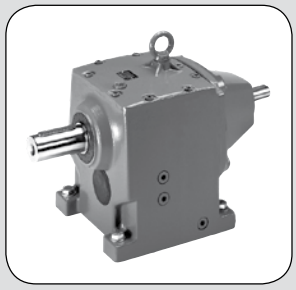

Send Quote Requests to info@automatedpt.com
Call +1(800)985-6929 To Order or Order Online At Nordgearmotors.com

SK 02, SK 03
NEMA-C + W
Ratings & Combinations

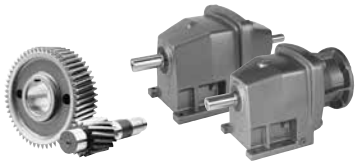

DRIVESYSTEMS

W + NEMA

Model Type	Gear Ratio	Output Speed	Output Torque*	Maximum input power◈ Solid input shafts type "W"				NEMA C-Face* Available Combinations							
				Input Speed											
	i_{tot}	n_2 1750 rpm	$T_{2\ max}$	1750 rpm	1150 rpm	875 rpm	580 rpm								
		[rpm]	[lb-in]	[hp]	[hp]	[hp]	[hp]	56C	140TC	180TC	210TC	250TC	280TC	320TC	360TC
SK 02	2.95	593	407	2.00	1.32	1.00	0.66	X	X						
	3.38	518	451	2.00	1.32	1.00	0.66	X	X						
	3.89	450	469	2.00	1.32	1.00	0.66	X	X						
	4.22	415	460	2.00	1.32	1.00	0.66	X	X						
	4.82	363	504	2.00	1.32	1.00	0.66	X	X						
	5.57	314	504	2.00	1.32	1.00	0.66	X	X						
	6.10	287	504	2.00	1.32	1.00	0.66	X	X						
	6.89	254	540	2.00	1.32	1.00	0.66	X	X						
	7.80	224	558	1.98	1.31	0.99	0.65	X	X*						
	8.19	214	558	1.89	1.25	0.95	0.62	X	X*						
	9.28	189	575	1.73	1.14	0.86	0.57	X	X*						
	9.95	176	566	1.58	1.04	0.79	0.52	X	X*						
	11.27	155	593	1.46	0.96	0.73	0.48	X	X*						
	12.82	137	620	1.35	0.89	0.67	0.44	X	X*						
	15.95	110	637	1.11	0.73	0.56	0.37	X	X*						
	20.59	85	655	0.88	0.58	0.44	0.29	X*	X*						
	23.13	76	690	0.83	0.55	0.42	0.27	X*							
	24.39	72	788	0.90	0.59	0.45	0.30	X*	X*						
	27.52	64	770	0.78	0.52	0.39	0.26	X*							
	29.61	59	814	0.76	0.50	0.38	0.25	X*	X*						
	33.42	52	850	0.70	0.46	0.35	0.23	X*							
	41.58	42	876	0.58	0.39	0.29	0.19	X*							
	53.68	33	788	0.41	0.27	0.21	0.14	X*							
	61.27	29	788	0.36	0.24	0.18	0.12	X*							
	73.06	24	788	0.30	0.20	0.15	0.10	X*							
SK 03	**65.50**	27	974	0.33	0.22	0.17	0.11	X*							
	81.50	21	938	0.31	0.21	0.16	0.10	X*							
	104.77	17	841	0.23	0.15	0.11	0.07	X*							
	124.62	14	938	0.21	0.14	0.10	0.07	X*							
	151.33	12	974	0.19	0.12	0.09	0.06	X*							
	170.75	10	956	0.15	0.10	0.08	0.05	X*							
	212.47	8.2	938	0.12	0.08	0.06	0.04	X*							
	274.28	6.4	788	0.08	0.05	0.04	0.03	X*							
	313.11	5.6	788	0.07	0.05	0.03	0.02	X*							

* Caution - The motor power may exceed the gear unit's mechanical torque capacity
◈ The mechanical power limit of the solid input shaft type "W" may limit the reducer rating.
All ratings are mechanical. See page 14 for thermal considerations.

lb	W	56C	140TC
SK 02	26	29	37
SK 03	35	37	–

Send Quote Requests to info@automatedpt.com
Call +1(800)985-6929 To Order or Order Online At Nordgearmotors.com

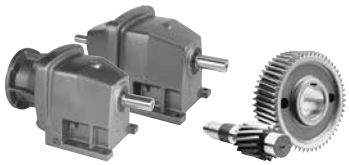

SK 11E , SK 12
NEMA-C + W
Ratings & Combinations

Model Type	Gear Ratio i_{tot}	Output Speed n_2 1750 rpm [rpm]	Output Torque* $T_{2\,max}$ [lb-in]	Maximum input power◈ Solid input shafts type "W" Input Speed 1750 rpm [hp]	1150 rpm [hp]	875 rpm [hp]	580 rpm [hp]	NEMA C-Face* Available Combinations 56C	140TC	180TC	210TC	250TC	280TC	320TC	360TC
SK 11E	1.35	1296	443	5.00	3.30	2.50	1.65	X	X	X					
	1.54	1136	443	5.00	3.30	2.50	1.65	X	X	X					
	1.81	967	487	5.00	3.30	2.50	1.65	X	X	X					
	2.04	858	513	5.00	3.30	2.50	1.65	X	X	X					
	2.32	754	425	5.00	3.30	2.50	1.65	X	X	X					
	2.83	618	478	4.69	3.09	2.34	1.55	X	X	X*					
	3.18	550	354	3.09	2.04	1.54	1.02	X	X						
	3.60	486	372	2.87	1.89	1.43	0.95	X	X						
	8.10	216	266	0.91	0.60	0.45	0.30	X*	X*						
	9.11	192	204	0.62	0.41	0.31	0.20	X*							
SK 12	2.96	591	929	5.00	3.30	2.50	1.65	X	X	X					
	3.39	516	965	5.00	3.30	2.50	1.65	X	X	X					
	3.98	440	1009	5.00	3.30	2.50	1.65	X	X	X					
	4.32	405	991	5.00	3.30	2.50	1.65	X	X	X					
	4.49	390	1044	5.00	3.30	2.50	1.65	X	X	X					
	4.93	355	1027	5.00	3.30	2.50	1.65	X	X	X					
	5.79	302	1080	5.00	3.30	2.50	1.65	X	X	X					
	6.53	268	1115	4.74	3.13	2.37	1.56	X	X	X*					
	7.28	240	1097	4.18	2.76	2.09	1.38	X	X	X*					
	7.85	223	1159	4.10	2.71	2.05	1.35	X	X	X*					
	8.56	204	1151	3.72	2.46	1.86	1.23	X	X	X*					
	9.65	181	1195	3.43	2.26	1.72	1.13	X	X	X*					
	10.70	164	1186	3.09	2.04	1.54	1.02	X	X	X*					
	13.39	131	1319	2.74	1.81	1.37	0.90	X	X	X*					
	16.73	105	1363	2.27	1.50	1.14	0.75	X	X	X*					
	18.79	93	1425	2.10	1.39	1.05	0.69	X	X						
	21.28	82	1478	1.92	1.27	0.96	0.63	X	X*						
	25.92	68	1212	1.31	0.86	0.65	0.43	X	X*						
	29.15	60	1097	1.04	0.69	0.52	0.34	X							
	31.19	56	1460	1.30	0.86	0.65	0.43	X	X*						
	35.07	50	1319	1.05	0.69	0.52	0.35	X							
	38.31	46	1628	1.19	0.78	0.59	0.39	X	X*						
	43.09	41	1434	0.93	0.62	0.47	0.31	X*							
	47.87	37	1566	0.92	0.61	0.46	0.30	X*	X*						
	53.84	33	1558	0.82	0.54	0.41	0.27	X*							
	61.35	29	1363	0.63	0.41	0.31	0.21	X*							
	72.63	24	1230	0.47	0.31	0.23	0.15	X*							

* Caution - The motor power may exceed the gear unit's mechanical torque capacity
◈ The mechanical power limit of the solid input shaft type "W" may limit the reducer rating.
All ratings are mechanical. See page 14 for thermal considerations.

lb	W	56C	140TC	180TC
SK 11E	22	24	33	49
SK 12	31	33	42	57

Send Quote Requests to info@automatedpt.com
Call +1(800)985-6929 To Order or Order Online At Nordgearmotors.com

Send Quote Requests to info@automatedpt.com Call +1(800)985-6929 To Order or Order Online At Nordgearmotors.com

SK 13, SK 12/02 NEMA-C + W Ratings & Combinations

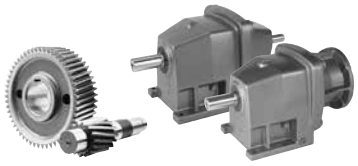

Model Type	Gear Ratio	Output Speed	Output Torque*	Maximum input power◈ Solid input shafts type "W"				NEMA C-Face* Available Combinations							
				Input Speed											
	i_{tot}	n_2 1750 rpm	$T_{2\ max}$	1750 rpm	1150 rpm	875 rpm	580 rpm								
		[rpm]	[lb-in]	[hp]	[hp]	[hp]	[hp]	56C	140TC	180TC	210TC	250TC	280TC	320TC	360TC
SK 13	**68.40**	26	1735	0.50	0.33	0.25	0.17	X*							
	85.47	20	1558	0.49	0.33	0.25	0.16	X*							
	108.72	16	1566	0.40	0.26	0.20	0.13	X*							
	132.45	13	1310	0.27	0.18	0.14	0.09	X*							
	159.36	11	1478	0.26	0.17	0.13	0.09	X*							
	195.78	8.9	1717	0.24	0.16	0.12	0.08	X*							
	244.62	7.2	1566	0.18	0.12	0.09	0.06	X*							
	275.12	6.4	1558	0.16	0.10	0.08	0.05	X*							
	313.48	5.6	1478	0.13	0.09	0.07	0.04	X*							
	369.34	4.7	1558	0.12	0.08	0.06	0.04	X*							
	420.83	4.2	1478	0.10	0.07	0.05	0.03	X*							
SK 12/02	92.89	19	1451	0.49	0.32	0.25	0.16	X*	X*						
	109.66	16	1451	0.42	0.28	0.21	0.14	X*	X*						
	133.23	13	1451	0.35	0.23	0.18	0.12	X*	X*						
	165.77	11	1593	0.33	0.22	0.17	0.11	X*	X*						
	213.39	8.2	1593	0.26	0.17	0.13	0.09	X*	X*						
	263.96	6.6	1593	0.22	0.15	0.11	0.07	X*	X*						
	339.81	5.1	1593	0.18	0.12	0.09	0.06	X*	X*						
	431.75	4.1	1593	0.16	0.10	0.08	0.05	X*	X*						
	537.49	3.3	1593	0.14	0.09	0.07	0.05	X*	X*						
	619.86	2.8	1593	0.12	0.08	0.06	0.04	X*							
	886.11	2	1593	0.10	0.07	0.05	0.03	X*							
	1054.29	1.7	1593	0.10	0.06	0.05	0.03	X*							
	1280.32	1.4	1593	0.09	0.06	0.04	0.03	X*							
	1592.93	1.1	1593	0.08	0.05	0.04	0.03	X*							
	2056.68	0.85	1593	0.08	0.05	0.04	0.02	X*							
	2798.93	0.63	1593	0.07	0.05	0.03	0.02	X*							

* Caution - The motor power may exceed the gear unit's mechanical torque capacity
◈ The mechanical power limit of the solid input shaft type "W" may limit the reducer rating.
All ratings are mechanical. See page 14 for thermal considerations.

lb	W	56C	140TC
SK 12/02	49	51	60
SK 13	42	44	–

Send Quote Requests to info@automatedpt.com
Call +1(800)985-6929 To Order or Order Online At Nordgearmotors.com

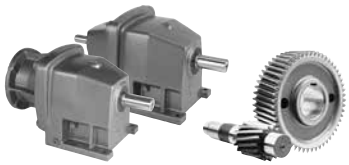

SK 21E, SK 22
NEMA-C + W
Ratings & Combinations

Model Type	Gear Ratio i_{tot}	Output Speed n_2 1750 rpm [rpm]	Output Torque* $T_{2\,max}$ [lb-in]	Maximum input power◈ Solid input shafts type "W" Input Speed 1750 rpm [hp]	1150 rpm [hp]	875 rpm [hp]	580 rpm [hp]	NEMA C-Face* Available Combinations 56C	140TC	180TC	210TC	250TC	280TC	320TC	360TC
SK 21E	1.46	1199	531	5.00	3.30	2.50	1.65	X	X	X					
	1.85	946	566	5.00	3.30	2.50	1.65	X	X	X					
	2.08	841	602	5.00	3.30	2.50	1.65	X	X	X					
	2.42	723	646	5.00	3.30	2.50	1.65	X	X	X					
	2.71	646	681	5.00	3.30	2.50	1.65	X	X	X					
	3.09	566	549	4.93	3.25	2.46	1.63	X	X	X*					
	3.67	477	602	4.55	3.01	2.28	1.50	X	X	X*					
	4.60	380	496	2.99	1.97	1.49	0.99	X	X						
	6.40	273	575	2.49	1.64	1.25	0.82	X	X	X*					
	7.90	222	531	1.87	1.23	0.94	0.62	X	X*						
	10.20	172	354	0.97	0.64	0.48	0.32	X*	X*						
SK 22	2.79	627	1018	5.00	3.30	2.50	1.65	X	X	X					
	3.53	496	1159	5.00	3.30	2.50	1.65	X	X	X					
	3.97	441	1230	5.00	3.30	2.50	1.65	X	X	X					
	4.62	379	1328	5.00	3.30	2.50	1.65	X	X	X					
	5.18	338	1407	5.00	3.30	2.50	1.65	X	X	X					
	5.79	302	1903	5.00	3.30	2.50	1.65	X	X	X					
	6.51	269	2018	5.00	3.30	2.50	1.65	X	X	X					
	6.86	255	2257	5.00	3.30	2.50	1.65	X	X	X					
	7.57	231	2177	5.00	3.30	2.50	1.65	X	X	X					
	8.48	206	2292	5.00	3.30	2.50	1.65	X	X	X					
	10.89	161	2805	5.00	3.30	2.50	1.65	X	X	X					
	12.20	143	2912	5.00	3.30	2.50	1.65	X	X	X					
	14.69	119	2982	5.00	3.30	2.50	1.65	X	X	X					
	16.75	104	3000	4.95	3.27	2.48	1.63	X	X	X*					
	20.03	87	2522	3.48	2.30	1.74	1.15	X	X	X*					
	23.74	74	2885	3.39	2.24	1.69	1.12	X	X	X*					
	24.73	71	2177	2.45	1.62	1.23	0.81	X	X						
	28.80	61	3310	3.20	2.11	1.60	1.06	X	X	X*					
	29.31	60	2584	2.46	1.62	1.23	0.81	X	X						
	34.69	50	3009	2.39	1.58	1.19	0.79	X	X	X*					
	35.55	49	2921	2.27	1.50	1.14	0.75	X	X						
	42.82	41	3009	1.96	1.29	0.98	0.65	X	X*						
	45.90	38	2584	1.56	1.03	0.78	0.51	X	X*						
	55.28	32	2832	1.44	0.95	0.72	0.47	X	X*						
	69.81	25	2328	0.92	0.61	0.46	0.30	X*	X*						
	86.30	20	2213	0.70	0.46	0.35	0.23	X*	X*						

* Caution - The motor power may exceed the gear unit's mechanical torque capacity
◈ The mechanical power limit of the solid input shaft type "W" may limit the reducer rating.
All ratings are mechanical. See page 14 for thermal considerations.

lb	W	56C	140TC	180TC
SK 21E	49	44	53	62
SK 22	64	60	69	77

Send Quote Requests to info@automatedpt.com
Call +1(800)985-6929 To Order or Order Online At Nordgearmotors.com

SK 23, SK 22/02
NEMA-C + W
Ratings & Combinations

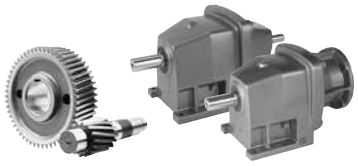

DRIVESYSTEMS

W + NEMA

Model Type	Gear Ratio	Output Speed	Output Torque*	Maximum input power◈ Solid input shafts type "W"				NEMA C-Face* Available Combinations							
				Input Speed											
	i_{tot}	n_2 1750 rpm	$T_{2\ max}$	1750 rpm	1150 rpm	875 rpm	580 rpm								
		[rpm]	[lb-in]	[hp]	[hp]	[hp]	[hp]	56C	140TC	180TC	210TC	250TC	280TC	320TC	360TC
SK 23	64.80	27	3009	1.00	0.66	0.50	0.33	X	X*						
	78.05	22	3009	1.00	0.66	0.50	0.33	X	X*						
	88.45	20	3009	0.95	0.63	0.48	0.32	X*	X*						
	100.60	17	3009	0.81	0.54	0.41	0.27	X*	X*						
	124.17	14	3009	0.67	0.44	0.33	0.22	X*	X*						
	151.44	12	2602	0.50	0.33	0.25	0.16	X*							
	179.50	9.7	2761	0.42	0.28	0.21	0.14	X*							
	217.73	8	3009	0.38	0.25	0.19	0.13	X*							
	262.24	6.7	3009	0.32	0.21	0.16	0.11	X*							
	323.70	5.4	3009	0.26	0.17	0.13	0.09	X*							
	417.95	4.2	3009	0.20	0.13	0.10	0.07	X*							
	516.65	3.4	2425	0.13	0.09	0.07	0.04	X*							
SK 22/02	117.25	15	3009	0.75	0.50	0.38	0.25	X*	X*						
	134.94	13	3009	0.67	0.45	0.34	0.22	X*	X*						
	167.21	10	3009	0.53	0.35	0.27	0.18	X*	X*						
	239.01	7.3	3009	0.40	0.27	0.20	0.13	X*	X*						
	284.11	6.2	3009	0.35	0.23	0.17	0.12	X*	X*						
	345.17	5.1	3009	0.30	0.20	0.15	0.10	X*	X*						
	444.73	3.9	3009	0.24	0.16	0.12	0.08	X*	X*						
	553.31	3.2	3009	0.21	0.14	0.10	0.07	X*	X*						
	682.98	2.6	3009	0.18	0.12	0.09	0.06	X*	X*						
	881.66	2	3009	0.15	0.10	0.07	0.05	X*	X*						
	1159.34	1.5	3009	0.13	0.08	0.06	0.04	X*							
	1442.41	1.2	3009	0.11	0.07	0.06	0.04	X*							
	1780.46	0.98	3009	0.10	0.07	0.05	0.03	X*							
	2125.46	0.82	3009	0.09	0.06	0.05	0.03	X*							
	2534.45	0.69	3009	0.09	0.06	0.04	0.03	X*							

* Caution - The motor power may exceed the gear unit's mechanical torque capacity
◈ The mechanical power limit of the solid input shaft type "W" may limit the reducer rating.
All ratings are mechanical. See page 14 for thermal considerations.

lb	W	56C	140TC
SK 23	68	71	79
SK 22/02	77	79	88

Send Quote Requests to info@automatedpt.com
Call +1(800)985-6929 To Order or Order Online At Nordgearmotors.com

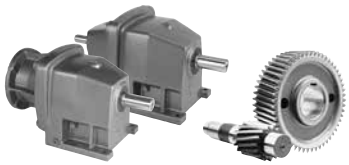

SK 31E , SK 32
NEMA-C + W
Ratings & Combinations

Model Type	Gear Ratio i_{tot}	Output Speed n_2 1750 rpm [rpm]	Output Torque* $T_{2\,max}$ [lb-in]	Maximum input power◈ Solid input shafts type "W" Input Speed 1750 rpm [hp]	1150 rpm [hp]	875 rpm [hp]	580 rpm [hp]	NEMA C-Face* Available Combinations 56C	140TC	180TC	210TC	250TC	280TC	320TC	360TC
SK 31E	1.39	1259	1266	10.00	6.60	5.00	3.30			X	X*				
	1.76	994	1328	10.00	6.60	5.00	3.30	X	X	X	X*				
	2.08	841	1460	10.00	6.60	5.00	3.30	X	X	X	X*				
	2.58	678	1637	10.00	6.60	5.00	3.30	X	X	X	X*				
	3.31	529	929	7.80	5.15	3.90	2.57	X	X	X	X*				
	3.67	477	974	7.37	4.86	3.68	2.43	X	X	X	X*				
	4.83	362	867	4.98	3.29	2.49	1.64	X	X	X*					
	8.20	213	929	3.14	2.07	1.57	1.04	X	X	X*					
	10.20	172	797	2.17	1.43	1.09	0.72	X	X						
SK 32	2.96	591	3859	10.00	6.60	5.00	3.30	X	X	X	X				
	3.75	467	4062	10.00	6.60	5.00	3.30	X	X	X	X				
	4.43	395	4098	10.00	6.60	5.00	3.30	X	X	X	X				
	5.28	331	5655	10.00	6.60	5.00	3.30	X	X	X	X				
	5.50	318	3965	10.00	6.60	5.00	3.30	X	X	X	X				
	5.70	307	5345	10.00	6.60	5.00	3.30	X	X	X	X				
	6.74	260	5345	10.00	6.60	5.00	3.30	X	X	X	X				
	7.05	248	2106	8.29	5.47	4.14	2.74	X	X	X	X*				
	7.90	222	5797	10.00	6.60	5.00	3.30	X	X	X	X				
	8.36	209	5283	10.00	6.60	5.00	3.30	X	X	X	X				
	9.80	179	5726	10.00	6.60	5.00	3.30	X	X	X	X				
	11.71	149	6284	10.00	6.60	5.00	3.30	X	X	X	X				
	14.55	120	5947	10.00	6.60	5.00	3.30	X	X	X	X				
	15.03	116	4496	8.27	5.46	4.14	2.73	X	X	X	X*				
	16.25	108	5655	9.69	6.40	4.85	3.20	X	X	X	X*				
	16.66	105	4691	7.81	5.16	3.91	2.58	X	X	X	X*				
	18.67	94	5584	8.33	5.50	4.16	2.75	X	X	X	X*				
	20.70	85	5823	7.85	5.18	3.93	2.59	X	X	X	X*				
	23.12	76	5576	6.72	4.44	3.36	2.22	X	X	X	X*				
	26.57	66	3859	4.04	2.67	2.02	1.33	X	X	X*					
	27.24	64	5328	5.41	3.57	2.71	1.79	X	X	X					
	30.43	58	5655	5.20	3.43	2.60	1.72	X	X	X					
	31.16	56	4531	4.03	2.66	2.01	1.33	X	X	X*					
	33.05	53	3363	2.83	1.87	1.41	0.93	X	X						
	37.23	47	5213	3.89	2.57	1.94	1.28	X	X	X*					
	38.76	45	3947	2.82	1.86	1.41	0.93	X	X						
	46.25	38	5947	3.59	2.37	1.79	1.18	X	X	X*					
	46.31	38	4717	2.84	1.88	1.42	0.94	X	X						
	57.53	30	5425	2.58	1.70	1.29	0.85	X	X						
	64.26	27	5664	2.43	1.60	1.21	0.80	X	X						
	72.76	24	4956	1.89	1.25	0.94	0.62	X	X*						
	81.27	22	4558	1.59	1.05	0.80	0.53	X	X*						

* Caution - The motor power may exceed the gear unit's mechanical torque capacity
◈ The mechanical power limit of the solid input shaft type "W" may limit the reducer rating.
All ratings are mechanical. See page 14 for thermal considerations.

lb	W	56C	140TC	180TC	210TC
SK 31E	60	55	64	73	73
SK 32	88	84	93	101	101

Send Quote Requests to info@automatedpt.com
Call +1(800)985-6929 To Order or Order Online At Nordgearmotors.com

SK 33, SK 32/12
NEMA-C + W
Ratings & Combinations

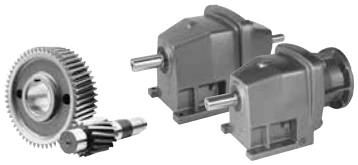

DRIVESYSTEMS

W + NEMA

Model Type	Gear Ratio	Output Speed	Output Torque*	Maximum input power◈ Solid input shafts type "W"				NEMA C-Face* Available Combinations							
				Input Speed											
	i_{tot}	n_2 1750 rpm	$T_{2\ max}$	1750 rpm	1150 rpm	875 rpm	580 rpm								
		[rpm]	[lb-in]	[hp]	[hp]	[hp]	[hp]	56C	140TC	180TC	210TC	250TC	280TC	320TC	360TC
SK 33N	88.18	20	4752	1.50	0.99	0.75	0.50	X	X*						
	112.18	16	4850	1.23	0.81	0.62	0.41	X	X*						
	134.02	13	5761	1.19	0.78	0.59	0.39	X	X*						
	166.49	11	5947	1.04	0.69	0.52	0.34	X	X*						
	207.10	8.5	5947	0.80	0.53	0.40	0.26	X*	X*						
	248.17	7.1	5947	0.67	0.44	0.33	0.22	X*							
	339.15	5.2	5761	0.48	0.31	0.24	0.16	X*							
	421.32	4.2	5947	0.40	0.26	0.20	0.13	X*							
	524.08	3.3	5947	0.31	0.21	0.16	0.10	X*							
	585.41	3	5611	0.27	0.18	0.13	0.09	X*							
	662.81	2.6	4956	0.20	0.13	0.10	0.07	X*							
	740.37	2.4	5045	0.19	0.13	0.10	0.06	X*							
SK 32/12	126.21	14	5487	1.22	0.80	0.61	0.40	X	X*	X*					
	148.18	12	5487	1.04	0.69	0.52	0.34	X	X*	X*					
	167.16	10	5487	0.92	0.61	0.46	0.31	X	X*	X*					
	215.56	8.1	5487	0.76	0.50	0.38	0.25	X*	X*	X*					
	267.79	6.5	5487	0.62	0.41	0.31	0.20	X*	X*	X*					
	363.06	4.8	5487	0.47	0.31	0.24	0.16	X*	X*	X*					
	446.31	3.9	5487	0.39	0.26	0.20	0.13	X*	X*	X*					
	554.68	3.2	5487	0.33	0.22	0.17	0.11	X*	X*	X*					
	699.55	2.5	5487	0.27	0.18	0.14	0.09	X*	X*						
	869.04	2	5487	0.23	0.15	0.11	0.08	X*	X*						
	1080.05	1.6	5487	0.19	0.13	0.10	0.06	X*	X*						
	1305.66	1.3	5487	0.17	0.11	0.08	0.06	X*							
	1604.24	1.1	5487	0.15	0.10	0.07	0.05	X*							
	2004.46	0.87	5487	0.13	0.09	0.06	0.04	X*							
	2704.02	0.65	5487	0.11	0.07	0.06	0.04	X*							

* Caution - The motor power may exceed the gear unit's mechanical torque capacity
◈ The mechanical power limit of the solid input shaft type "W" may limit the reducer rating.
All ratings are mechanical. See page 14 for thermal considerations.

lb	W	56C	140TC	180TC
SK 33N	60	97	106	–
SK 32/12	88	108	117	132

Send Quote Requests to info@automatedpt.com
Call +1(800)985-6929 To Order or Order Online At Nordgearmotors.com

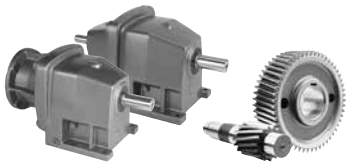

SK 41E , SK 42
NEMA-C + W
Ratings & Combinations

Model Type	Gear Ratio i_{tot}	Output Speed n_2 1750 rpm [rpm]	Output Torque* $T_{2\,max}$ [lb-in]	Maximum input power◈ Solid input shafts type "W" Input Speed 1750 rpm [hp]	1150 rpm [hp]	875 rpm [hp]	580 rpm [hp]	NEMA C-Face* Available Combinations 56C	140TC	180TC	210TC	250TC	280TC	320TC	360TC
SK 41E	1.41	1241	1593	20.00	13.20	10.00	6.60			X	X	X			
	1.50	1167	1682	20.00	13.20	10.00	6.60			X	X	X			
	1.63	1074	1770	20.00	13.20	10.00	6.60			X	X	X			
	1.82	962	1974	20.00	13.20	10.00	6.60	X	X	X	X	X			
	2.14	818	2195	20.00	13.20	10.00	6.60	X	X	X	X	X			
	2.50	700	2398	20.00	13.20	10.00	6.60	X	X	X	X	X			
	3.08	568	2567	20.00	13.20	10.00	6.60	X	X	X	X	X			
	3.42	512	1239	10.07	6.64	5.03	3.32	X	X	X	X				
	3.88	451	1283	9.18	6.06	4.59	3.03	X	X	X	X*				
	4.29	408	1372	8.88	5.86	4.44	2.93	X	X	X	X*				
	5.27	332	1726	9.09	6.00	4.55	3.00			X	X*				
	7.18	244	1682	6.51	4.30	3.25	2.15			X	X*				
	10.55	166	1682	4.43	2.92	2.21	1.46	X	X	X*					
	14.80	118	1177	2.20	1.45	1.10	0.73	X	X						
SK 42	3.02	579	5345	20.00	13.20	10.00	6.60			X	X	X			
	3.21	545	5487	20.00	13.20	10.00	6.60			X	X	X			
	3.50	500	5885	20.00	13.20	10.00	6.60			X	X	X			
	3.89	450	6195	20.00	13.20	10.00	6.60	X	X	X	X	X			
	4.58	382	6832	20.00	13.20	10.00	6.60	X	X	X	X	X			
	4.79	365	8496	20.00	13.20	10.00	6.60			X	X	X			
	5.10	343	8708	20.00	13.20	10.00	6.60			X	X	X			
	5.35	327	7230	20.00	13.20	10.00	6.60	X	X	X	X	X			
	5.75	304	10036	20.00	13.20	10.00	6.60			X	X	X			
	6.19	283	9514	20.00	13.20	10.00	6.60	X	X	X	X	X			
	6.65	263	10293	20.00	13.20	10.00	6.60			X	X	X			
	7.28	240	9523	20.00	13.20	10.00	6.60	X	X	X	X	X			
	8.50	206	9523	20.00	13.20	10.00	6.60	X	X	X	X	X			
	10.20	172	10328	20.00	13.20	10.00	6.60	X	X	X	X	X			
	12.28	143	10585	20.00	13.20	10.00	6.60	X	X	X	X	X			
	14.38	122	10248	19.84	13.09	9.92	6.55	X	X	X	X	X*			
	15.12	116	11009	20.00	13.20	10.00	6.60	X	X	X	X	X			
	17.71	99	10496	16.49	10.88	8.24	5.44	X	X	X	X	X*			
	17.92	98	8832	13.73	9.06	6.87	4.53			X	X				
	21.50	81	10293	13.23	8.73	6.61	4.37			X	X				
	21.87	80	9700	12.31	8.13	6.16	4.06	X	X	X	X	X*			
	24.41	72	7593	8.67	5.73	4.34	2.86			X	X*				
	24.67	71	7885	8.88	5.86	4.44	2.93	X	X	X	X*				
	25.88	68	11001	11.87	7.83	5.93	3.92			X	X				
	29.29	60	9036	8.60	5.68	4.30	2.84			X	X*				
	30.46	57	9540	8.63	5.69	4.31	2.85	X	X	X	X*				
	35.25	50	10868	8.62	5.69	4.31	2.85			X	X*				
	41.29	42	10496	6.99	4.62	3.50	2.31			X	X*				
	50.98	34	9717	5.24	3.46	2.62	1.73			X	X*				
	60.66	29	8885	4.09	2.70	2.04	1.35	X	X	X*					
	74.87	23	9558	3.49	2.30	1.74	1.15	X	X	X*					
	85.10	21	7045	2.35	1.55	1.17	0.77	X	X						
	105.08	17	7629	2.06	1.36	1.03	0.68	X	X						

* Caution - The motor power may exceed the gear unit's mechanical torque capacity
◈ The mechanical power limit of the solid input shaft type "W" may limit the reducer rating.
All ratings are mechanical. See page 14 for thermal considerations.

lb	W	56C	140TC	180TC	210TC	250TC
SK 41E	101	90	106	106	137	159
SK 42	143	132	148	148	179	201

Send Quote Requests to info@automatedpt.com
Call +1(800)985-6929 To Order or Order Online At Nordgearmotors.com

SK 43, SK 42/12
NEMA-C + W
Ratings & Combinations

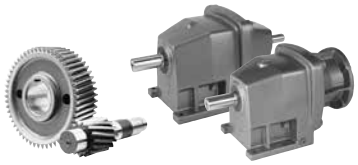

DRIVESYSTEMS

W + NEMA

Model Type	Gear Ratio	Output Speed	Output Torque*	Maximum input power◈ Solid input shafts type "W"				NEMA C-Face* Available Combinations							
				Input Speed											
	i_{tot}	n_2 1750 rpm	$T_{2\ max}$	1750 rpm	1150 rpm	875 rpm	580 rpm								
		[rpm]	[lb-in]	[hp]	[hp]	[hp]	[hp]	56C	140TC	180TC	210TC	250TC	280TC	320TC	360TC
SK 43	40.98	43	9213	5.00	3.30	2.50	1.65	X	X	X					
	48.56	36	9248	5.00	3.30	2.50	1.65	X	X	X					
	58.27	30	10319	4.91	3.24	2.46	1.62	X	X	X*					
	70.12	25	11151	4.42	2.92	2.21	1.46	X	X	X*					
	79.96	22	10886	3.80	2.51	1.90	1.25	X	X	X*					
	94.96	18	10974	3.13	2.07	1.57	1.03	X	X	X*					
	107.51	16	9877	2.51	1.65	1.25	0.83	X	X	X*					
	129.38	14	10974	2.44	1.61	1.22	0.80	X	X	X*					
	141.55	12	9319	1.77	1.17	0.89	0.59	X	X						
	169.86	10	10319	1.64	1.08	0.82	0.54	X	X						
	182.76	9.6	9000	1.37	0.90	0.69	0.45	X	X*						
	204.42	8.6	11408	1.56	1.03	0.78	0.51	X	X						
	219.32	8	10620	1.35	0.89	0.67	0.44	X	X*						
	231.43	7.6	9877	1.19	0.79	0.60	0.39	X	X*						
	263.93	6.6	11213	1.17	0.77	0.59	0.39	X	X*						
	278.51	6.3	11319	1.13	0.75	0.57	0.37	X	X*						
	298.80	5.9	9894	0.93	0.61	0.46	0.31	X*	X*						
	359.59	4.9	11381	0.88	0.58	0.44	0.29	X*	X*						
	421.11	4.2	10496	0.70	0.46	0.35	0.23	X*	X*						
	528.37	3.3	8762	0.46	0.30	0.23	0.15	X*	X*						
	618.76	2.8	9841	0.44	0.29	0.22	0.14	X*	X*						
	764.03	2.3	9124	0.33	0.22	0.17	0.11	X*	X*						
	868.02	2	7611	0.24	0.16	0.12	0.08	X*	X*						
	1071.82	1.6	8496	0.22	0.14	0.11	0.07	X*	X*						
SK 42/12	87.73	20	10620	3.00	1.98	1.50	0.99	X	X	X*					
	116.20	15	10620	2.53	1.67	1.26	0.83	X	X	X*					
	140.40	12	10620	2.02	1.33	1.01	0.67	X	X	X*					
	169.00	10	10620	1.69	1.11	0.84	0.56	X	X*	X*					
	230.05	7.6	10620	1.28	0.85	0.64	0.42	X	X*	X*					
	276.92	6.3	10620	1.06	0.70	0.53	0.35	X	X*	X*					
	346.53	5.1	10620	0.91	0.60	0.46	0.30	X*	X*	X*					
	433.49	4	10620	0.73	0.48	0.36	0.24	X*	X*	X*					
	550.73	3.2	10620	0.59	0.39	0.30	0.20	X*	X*						
	670.81	2.6	10620	0.49	0.32	0.25	0.16	X*	X*						
	750.33	2.3	10620	0.44	0.29	0.22	0.15	X*	X*						
	1114.65	1.6	10620	0.32	0.21	0.16	0.11	X*							
	1393.38	1.3	10620	0.27	0.18	0.14	0.09	X*							
	1561.55	1.1	10620	0.24	0.16	0.12	0.08	X*							
	2163.20	0.81	10620	0.19	0.13	0.10	0.06	X*							
	2560.21	0.68	10620	0.17	0.11	0.08	0.06	X*							

* Caution - The motor power may exceed the gear unit's mechanical torque capacity
◈ The mechanical power limit of the solid input shaft type "W" may limit the reducer rating.
All ratings are mechanical. See page 14 for thermal considerations.

lb	W	56C	140TC	180TC
SK 43	154	150	159	168
SK 42/12	143	148	154	170

Send Quote Requests to info@automatedpt.com
Call +1(800)985-6929 To Order or Order Online At Nordgearmotors.com

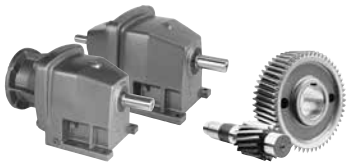

SK 51E , SK 52
NEMA-C + W
Ratings & Combinations

Model Type	Gear Ratio	Output Speed	Output Torque*	Maximum input power◈ Solid input shafts type "W"				NEMA C-Face* Available Combinations							
				Input Speed											
	i_{tot}	n_2 1750 rpm	$T_{2\,max}$	1750 rpm	1150 rpm	875 rpm	580 rpm								
		[rpm]	[lb-in]	[hp]	[hp]	[hp]	[hp]	56C	140TC	180TC	210TC	250TC	280TC	320TC	360TC
SK 51E	1.24	1411	2434	30.00	19.80	15.00	9.90					X	X		
	1.44	1215	2699	30.00	19.80	15.00	9.90					X	X		
	1.52	1151	2744	30.00	19.80	15.00	9.90					X	X		
	1.64	1067	2876	30.00	19.80	15.00	9.90					X	X		
	1.82	962	3018	30.00	19.80	15.00	9.90	X	X	X	X	X	X		
	2.06	850	3381	30.00	19.80	15.00	9.90			X	X	X	X		
	2.50	700	3770	30.00	19.80	15.00	9.90	X	X	X	X	X	X		
	2.86	612	4036	30.00	19.80	15.00	9.90	X	X	X	X	X	X		
	3.31	529	4354	30.00	19.80	15.00	9.90	X	X	X	X	X	X		
	4.04	433	3629	24.93	16.45	12.46	8.23	X	X	X	X	X			
	5.50	318	1947	9.82	6.48	4.91	3.24	X	X	X	X*				
	6.82	257	3540	14.44	9.53	7.22	4.76			X	X				
	9.09	193	2832	8.67	5.72	4.34	2.86			X	X*				
	13.27	132	2567	5.38	3.55	2.69	1.77	X	X	X					
SK 52	2.78	629	7859	30.00	19.80	15.00	9.90					X	X		
	3.23	542	8487	30.00	19.80	15.00	9.90					X	X		
	3.40	515	8930	30.00	19.80	15.00	9.90					X	X		
	3.67	477	9354	30.00	19.80	15.00	9.90					X	X		
	4.08	429	9974	30.00	19.80	15.00	9.90			X	X	X	X		
	4.38	400	11248	30.00	19.80	15.00	9.90					X	X		
	4.61	380	10576	30.00	19.80	15.00	9.90			X	X	X	X		
	5.08	344	12080	30.00	19.80	15.00	9.90					X	X		
	5.60	312	10355	30.00	19.80	15.00	9.90	X	X	X	X	X	X		
	5.79	302	12709	30.00	19.80	15.00	9.90					X	X		
	6.09	287	13027	30.00	19.80	15.00	9.90					X	X		
	6.42	273	13257	30.00	19.80	15.00	9.90			X	X	X	X		
	7.27	241	13850	30.00	19.80	15.00	9.90			X	X	X	X		
	7.70	227	14089	30.00	19.80	15.00	9.90			X	X	X	X		
	8.83	198	14833	30.00	19.80	15.00	9.90	X	X	X	X	X	X		
	10.58	165	15585	30.00	19.80	15.00	9.90	X	X	X	X	X	X		
	13.45	130	16381	30.00	19.80	15.00	9.90	X	X	X	X	X	X		
	14.00	125	16992	30.00	19.80	15.00	9.90	X	X	X	X	X	X		
	17.81	98	16992	26.42	17.44	13.21	8.72	X	X	X	X	X	X*		
	19.60	89	16912	23.88	15.76	11.94	7.88	X	X	X	X	X	X*		
	21.68	81	16753	21.53	14.21	10.77	7.11	X	X	X	X	X	X*		
	23.92	73	16912	19.59	12.93	9.79	6.46	X	X	X	X	X*			
	24.07	73	14948	17.31	11.43	8.66	5.71			X	X				
	26.46	66	16753	17.54	11.58	8.77	5.79	X	X	X	X	X*			
	28.85	61	17912	17.34	11.44	8.67	5.72			X	X				
	32.09	55	12328	10.76	7.10	5.38	3.55			X	X				
	32.56	54	11151	9.55	6.31	4.78	3.15	X	X	X	X*				
	36.03	49	12337	9.59	6.33	4.80	3.17	X	X	X	X*				
	36.69	48	16992	12.94	8.54	6.47	4.27			X	X				
	38.45	46	14762	10.77	7.11	5.39	3.56			X	X				
	40.37	43	16912	11.54	7.62	5.77	3.81			X	X				
	48.90	36	16992	9.71	6.41	4.85	3.20			X	X*				
	53.81	33	16912	8.86	5.84	4.43	2.92			X	X*				
	59.54	29	16753	7.71	5.09	3.85	2.54			X	X*				
	71.39	25	14054	5.57	3.68	2.79	1.84	X	X	X					
	78.56	22	14125	4.93	3.25	2.47	1.63	X	X	X*					
	86.92	20	15231	4.83	3.19	2.42	1.59	X	X	X*					

* Caution - The motor power may exceed the gear unit's mechanical torque capacity
◈ The mechanical power limit of the solid input shaft type "W" may limit the reducer rating.
All ratings are mechanical. See page 14 for thermal considerations.

lb	W	56C	140TC	180TC	210TC	250TC	280TC
SK 51E	121	110	110	126	126	179	199
SK 52	207	196	196	212	212	265	285

Send Quote Requests to info@automatedpt.com
Call +1(800)985-6929 To Order or Order Online At Nordgearmotors.com

SK 53, SK 52/12
NEMA-C + W
Ratings & Combinations

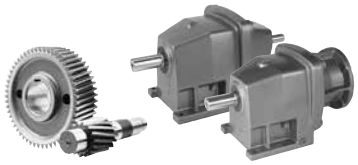

DRIVESYSTEMS

W + NEMA

Model Type	Gear Ratio	Output Speed	Output Torque*	Maximum input power◈ Solid input shafts type "W"				NEMA C-Face* Available Combinations							
				Input Speed											
	i_{tot}	n_2 1750 rpm	$T_{2\ max}$	1750 rpm	1150 rpm	875 rpm	580 rpm								
		[rpm]	[lb-in]	[hp]	[hp]	[hp]	[hp]	56C	140TC	180TC	210TC	250TC	280TC	320TC	360TC
SK 53	58.94	30	14470	5.00	3.30	2.50	1.65	X	X	X					
	65.35	27	16992	5.00	3.30	2.50	1.65	X	X	X					
	79.69	22	16479	5.00	3.30	2.50	1.65	X	X	X					
	95.49	18	19744	5.00	3.30	2.50	1.65	X	X	X					
	105.87	17	19682	5.00	3.30	2.50	1.65	X	X	X					
	139.34	13	19753	4.07	2.69	2.04	1.34	X	X	X*					
	177.22	9.9	16992	2.67	1.76	1.33	0.88	X	X	X*					
	185.72	9.4	16107	2.40	1.59	1.20	0.79	X	X	X*					
	236.21	7.4	16992	2.00	1.32	1.00	0.66	X	X*	X*					
	245.56	7.1	16452	1.85	1.22	0.93	0.61	X	X*						
	294.26	5.9	19709	1.85	1.22	0.92	0.61	X	X*						
	374.25	4.7	16992	1.27	0.84	0.63	0.42	X	X*						
	392.20	4.5	16134	1.15	0.76	0.58	0.38	X	X*						
	498.82	3.5	16992	0.94	0.62	0.47	0.31	X*	X*						
	548.89	3.2	16912	0.86	0.57	0.43	0.28	X*	X*						
	607.30	2.9	16656	0.77	0.51	0.38	0.25	X*	X*						
	728.20	2.4	14116	0.54	0.35	0.27	0.18	X*	X*						
SK 52/12	97.80	18	16196	4.63	3.05	2.31	1.53	X	X	X*					
	124.38	14	16196	3.60	2.37	1.80	1.19	X	X	X*					
	146.03	12	16196	3.08	2.04	1.54	1.02	X	X	X*					
	194.62	9	16196	2.31	1.53	1.16	0.76	X	X	X*					
	219.56	8	16196	2.06	1.36	1.03	0.68	X	X	X*					
	283.13	6.2	16196	1.59	1.05	0.80	0.53	X	X*	X*					
	354.06	4.9	16196	1.26	0.83	0.63	0.42	X	X*	X*					
	491.28	3.6	16196	0.98	0.65	0.49	0.32	X*	X*	X*					
	542.09	3.2	16196	0.88	0.58	0.44	0.29	X*	X*						
	689.41	2.5	16196	0.70	0.46	0.35	0.23	X*	X*						
	918.83	1.9	16196	0.54	0.36	0.27	0.18	X*	X*						
	1144.36	1.5	16196	0.44	0.29	0.22	0.14	X*	X*						
	1425.44	1.2	16196	0.36	0.24	0.18	0.12	X*							
	1714.92	1	16196	0.31	0.21	0.16	0.10	X*							
	2107.10	0.83	16196	0.27	0.18	0.13	0.09	X*							
	2632.78	0.66	16196	0.22	0.15	0.11	0.07	X*							

* Caution - The motor power may exceed the gear unit's mechanical torque capacity
◈ The mechanical power limit of the solid input shaft type "W" may limit the reducer rating.
All ratings are mechanical. See page 14 for thermal considerations.

lb	W	56C	140TC	180TC
SK 53	227	223	231	240
SK 52/12	207	212	218	234

Send Quote Requests to info@automatedpt.com
Call +1(800)985-6929 To Order or Order Online At Nordgearmotors.com

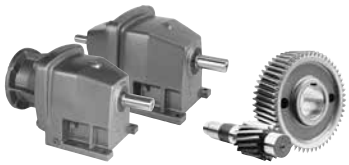

SK 62 , SK 63
NEMA-C + W
Ratings & Combinations

Model Type	Gear Ratio i_{tot}	Output Speed n_2 1750 rpm [rpm]	Output Torque* $T_{2\,max}$ [lb-in]	Maximum input power◈ Solid input shafts type "W" Input Speed 1750 rpm [hp]	1150 rpm [hp]	875 rpm [hp]	580 rpm [hp]	NEMA C-Face* Available Combinations 56C	140TC	180TC	210TC	250TC	280TC	320TC	360TC
SK 62	2.97	589	17346	60.00	39.60	30.00	19.80						X	X	X*
	3.30	530	17523	60.00	39.60	30.00	19.80			X	X	X	X	X	X*
	3.72	470	17966	60.00	39.60	30.00	19.80			X	X	X	X	X	X*
	3.91	448	17780	60.00	39.60	30.00	19.80			X	X	X	X	X	X*
	4.05	432	16682	60.00	39.60	30.00	19.80						X	X	X*
	4.56	384	18417	60.00	39.60	30.00	19.80			X	X	X	X	X	X*
	5.29	331	16656	60.00	39.60	30.00	19.80			X	X	X	X	X	X*
	6.35	276	17081	60.00	39.60	30.00	19.80			X	X	X	X	X	X*
	7.56	231	27612	60.00	39.60	30.00	19.80			X	X	X	X	X	X*
	8.78	199	26656	60.00	39.60	30.00	19.80			X	X	X	X	X	X*
	10.55	166	27373	60.00	39.60	30.00	19.80			X	X	X	X	X	X*
	11.59	151	27231	60.00	39.60	30.00	19.80			X	X	X	X	X	X*
	13.92	126	27258	54.49	35.97	27.25	17.98			X	X	X	X	X	X*
	15.80	111	26585	46.82	30.90	23.41	15.45			X	X	X	X		
	18.14	96	27231	41.48	27.38	20.74	13.69			X	X	X	X		
	37.05	47	26639	19.87	13.11	9.93	6.56			X	X	X*	X*		
	48.73	36	22214	12.69	8.37	6.34	4.19			X	X				
SK 63	17.37	101	28320	30.00	19.80	15.00	9.90	X	X	X	X	X	X		
	20.77	84	28320	30.00	19.80	15.00	9.90	X	X	X	X	X	X		
	21.98	80	28320	30.00	19.80	15.00	9.90	X	X	X	X	X	X		
	26.28	67	28320	30.00	19.80	15.00	9.90	X	X	X	X	X	X		
	30.91	57	31772	28.73	18.96	14.37	9.48	X	X	X	X	X	X*		
	36.11	48	32657	24.87	16.42	12.44	8.21	X	X	X	X	X	X*		
	43.43	40	32568	20.67	13.64	10.33	6.82	X	X	X	X	X	X*		
	50.73	34	32745	17.66	11.66	8.83	5.83	X	X	X	X	X*	X*		
	53.82	33	32745	17.15	11.32	8.57	5.66	X	X	X	X	X*	X*		
	62.87	28	32480	14.43	9.52	7.21	4.76	X	X	X	X	X*	X*		
	77.46	23	32745	11.95	7.89	5.97	3.94	X	X	X	X	X*			
	87.06	20	28320	8.99	5.93	4.49	2.97	X	X	X	X*				
	106.95	16	32745	8.31	5.49	4.16	2.74			X	X*				
	107.89	16	32303	8.20	5.41	4.10	2.71	X	X	X	X*				
	132.54	13	32745	6.75	4.46	3.38	2.23			X	X*				
	145.71	12	32745	6.23	4.11	3.12	2.06			X	X*				
	180.57	9.7	32391	4.99	3.29	2.49	1.65			X*	X*				
	214.10	8.2	32214	4.19	2.77	2.10	1.38	X	X	X*					
	265.32	6.6	32214	3.37	2.23	1.69	1.11	X	X	X*					
	300.34	5.8	28320	2.61	1.72	1.30	0.86	X	X						
	372.21	4.7	28320	2.11	1.39	1.06	0.70	X	X						

* Caution - The motor power may exceed the gear unit's mechanical torque capacity
◈ The mechanical power limit of the solid input shaft type "W" may limit the reducer rating.
All ratings are mechanical. See page 14 for thermal considerations.

lb	W	56C	140TC	180TC	210TC	250TC	280TC	320TC	360TC
SK 62	377	–	–	351	379	434	434	465	498
SK 63	328	317	317	333	364	386	386	–	–

Send Quote Requests to info@automatedpt.com
Call +1(800)985-6929 To Order or Order Online At Nordgearmotors.com

SK 63/22, SK 63/23
NEMA-C + W
Ratings & Combinations

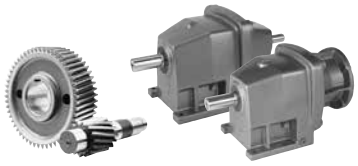

DRIVESYSTEMS

W + NEMA

Model Type	Gear Ratio	Output Speed	Output Torque*	Maximum input power◈ Solid input shafts type "W"				NEMA C-Face* Available Combinations							
				Input Speed											
	i_{tot}	n_2 1750 rpm	$T_{2\ max}$	1750 rpm	1150 rpm	875 rpm	580 rpm								
		[rpm]	[lb-in]	[hp]	[hp]	[hp]	[hp]	56C	140TC	180TC	210TC	250TC	280TC	320TC	360TC
SK 63/22	153.31	11	28320	4.94	3.26	2.47	1.63	X	X	X*					
	172.85	10	28320	4.49	2.97	2.25	1.48	X	X	X*					
	224.97	7.8	28320	3.50	2.31	1.75	1.16	X	X	X*					
	282.73	6.2	28320	2.79	1.84	1.39	0.92	X	X	X*					
	368.29	4.8	28320	2.16	1.42	1.08	0.71	X	X	X*					
	430.19	4.1	28320	1.84	1.22	0.92	0.61	X	X*	X*					
	552.45	3.2	28320	1.44	0.95	0.72	0.47	X	X*	X*					
	727.45	2.4	28320	1.08	0.71	0.54	0.36	X	X*	X*					
	849.73	2.1	28320	1.00	0.66	0.50	0.33	X	X*	X*					
SK 63/23	1064.04	1.6	28320	0.75	0.50	0.38	0.25	X*	X*						
	1408.77	1.2	28320	0.59	0.39	0.30	0.20	X*	X*						
	1676.63	1	28320	0.50	0.33	0.25	0.17	X*	X*						
	2161.10	0.81	28320	0.42	0.28	0.21	0.14	X*	X*						
	2814.26	0.62	28320	0.33	0.22	0.17	0.11	X*	X*						
	3389.71	0.52	28320	0.29	0.19	0.14	0.09	X*	X*						
	4369.06	0.4	28320	0.23	0.15	0.12	0.08	X*	X*						
	5393.14	0.32	28320	0.20	0.13	0.10	0.07	X*	X*						
	6683.37	0.26	28320	0.17	0.11	0.09	0.06	X*	X*						
	8150.78	0.21	28320	0.15	0.10	0.07	0.05	X*							
	11045.44	0.16	28320	0.13	0.08	0.06	0.04	X*							
	13304.45	0.13	28320	0.11	0.07	0.06	0.04	X*							

* Caution - The motor power may exceed the gear unit's mechanical torque capacity
◈ The mechanical power limit of the solid input shaft type "W" may limit the reducer rating.
All ratings are mechanical. See page 14 for thermal considerations.

lb	W	56C	140TC	180TC
SK 63/22	348	344	353	361
SK 63/23	353	357	364	–

Send Quote Requests to info@automatedpt.com
Call +1(800)985-6929 To Order or Order Online At Nordgearmotors.com

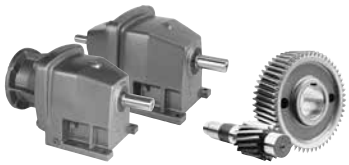

SK 72 , SK 73
NEMA-C + W
Ratings & Combinations

Model Type	Gear Ratio i_{tot}	Output Speed n_2 1750 rpm [rpm]	Output Torque* $T_{2\,max}$ [lb-in]	Maximum input power◈ Solid input shafts type "W" Input Speed 1750 rpm [hp]	1150 rpm [hp]	875 rpm [hp]	580 rpm [hp]	NEMA C-Face* Available Combinations 56C	140TC	180TC	210TC	250TC	280TC	320TC	360TC
SK 72	2.76	634	18895	75.00	49.50	37.50	24.75			X	X	X	X	X	X
	3.26	537	20647	75.00	49.50	37.50	24.75							X	X
	3.43	510	21444	75.00	49.50	37.50	24.75			X	X	X	X	X	X
	3.86	453	22913	75.00	49.50	37.50	24.75							X	X
	4.12	425	23656	75.00	49.50	37.50	24.75			X	X	X	X	X	X
	4.85	361	25754	75.00	49.50	37.50	24.75			X	X	X	X	X	X
	5.60	312	25054	75.00	49.50	37.50	24.75			X	X	X	X	X	X
	6.42	273	24515	75.00	49.50	37.50	24.75			X	X	X	X	X	X
	6.95	252	37984	75.00	49.50	37.50	24.75			X	X	X	X	X	X
	8.19	214	41214	75.00	49.50	37.50	24.75			X	X	X	X	X	X
	9.46	185	41666	75.00	49.50	37.50	24.75			X	X	X	X	X	X
	10.84	161	41391	75.00	49.50	37.50	24.75			X	X	X	X	X	X
	12.52	140	35869	75.00	49.50	37.50	24.75			X	X	X	X	X	X
	14.33	122	35869	69.43	45.83	34.72	22.91			X	X	X	X	X	X*
	16.86	104	35869	59.19	39.06	29.59	19.53			X	X	X	X	X	X*
	21.64	81	39754	51.09	33.72	25.55	16.86					X	X		
	21.72	81	35869	46.10	30.43	23.05	15.21			X	X	X	X		
	28.63	61	35869	34.72	22.91	17.36	11.46					X	X		
	33.04	53	28470	23.94	15.80	11.97	7.90			X	X	X	X*		
	43.71	40	35843	22.75	15.01	11.37	7.51			X	X	X	X*		
SK 73	18.00	97	44250	60.00	39.60	30.00	19.80			X	X	X	X	X	X*
	20.62	85	44250	59.68	39.39	29.84	19.69			X	X	X	X	X	X*
	23.34	75	44250	52.66	34.75	26.33	17.38			X	X	X	X	X	X*
	28.32	62	44250	43.53	28.73	21.77	14.37			X	X	X	X	X*	X*
	33.24	53	44250	37.21	24.56	18.61	12.28			X	X	X	X	X*	X*
	37.63	47	44250	33.00	21.78	16.50	10.89			X	X	X	X	X*	X*
	45.66	38	47525	28.65	18.91	14.33	9.46			X	X	X	X*	X*	X*
	52.24	33	49206	25.76	17.00	12.88	8.50			X	X	X	X*		
	60.46	29	50003	23.01	15.19	11.50	7.59			X	X	X	X*		
	74.87	23	47171	17.21	11.36	8.61	5.68			X	X	X*	X*		
	91.38	19	47171	14.22	9.39	7.11	4.69			X	X	X*			
	100.46	17	35400	9.55	6.30	4.77	3.15			X	X*				
	124.41	14	44250	9.83	6.49	4.91	3.24			X	X*				
	124.57	14	49737	11.05	7.29	5.52	3.65			X	X	X*	X*		
	166.03	11	49826	8.70	5.74	4.35	2.87			X	X*				
	205.61	8.5	47171	6.36	4.20	3.18	2.10			X	X*				

* Caution - The motor power may exceed the gear unit's mechanical torque capacity
◈ The mechanical power limit of the solid input shaft type "W" may limit the reducer rating.
All ratings are mechanical. See page 14 for thermal considerations.

lb	W	180TC	210TC	250TC	280TC	320TC	360TC
SK 72	529	503	503	531	583	617	650
SK 73	551	525	525	553	608	639	672

Send Quote Requests to info@automatedpt.com
Call +1(800)985-6929 To Order or Order Online At Nordgearmotors.com

SK 73/22, SK 73/23, SK 73/32 NEMA-C + W Ratings & Combinations

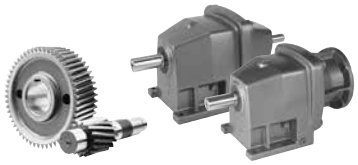

DRIVESYSTEMS

Model Type	Gear Ratio	Output Speed	Output Torque*	Maximum input power◈ Solid input shafts type "W"				NEMA C-Face* Available Combinations							
				Input Speed											
	i_{tot}	n_2 1750 rpm	$T_{2\ max}$	1750 rpm	1150 rpm	875 rpm	580 rpm								
		[rpm]	[lb-in]	[hp]	[hp]	[hp]	[hp]	56C	140TC	180TC	210TC	250TC	280TC	320TC	360TC
SK 73/22	279.33	6.3	44250	4.42	2.92	2.21	1.46	X	X	X*					
	345.90	5.1	44250	3.58	2.36	1.79	1.18	X	X	X*					
	457.68	3.8	44250	2.67	1.76	1.33	0.88	X	X	X*					
	566.77	3.1	44250	2.18	1.44	1.09	0.72	X	X	X*					
	737.61	2.4	44250	1.69	1.11	0.84	0.56	X	X*	X*					
	888.16	2	44250	1.40	0.93	0.70	0.46	X	X*	X*					
	1099.84	1.6	44250	1.12	0.74	0.56	0.37	X	X*	X*					
	1254.07	1.4	44250	1.04	0.68	0.52	0.34	X	X*	X*					
	1772.08	0.99	44250	0.75	0.49	0.37	0.25	X*	X*						
	2194.44	0.8	44250	0.62	0.41	0.31	0.20	X*	X*						
	2775.11	0.63	44250	0.50	0.33	0.25	0.16	X*	X*						
	3436.53	0.51	44250	0.41	0.27	0.21	0.14	X*	X*						
SK 73/23	4440.18	0.39	44250	0.33	0.22	0.16	0.11	X*	X*						
	5498.45	0.32	44250	0.28	0.18	0.14	0.09	X*	X*						
	6623.00	0.26	44250	0.24	0.16	0.12	0.08	X*	X*						
	8186.29	0.21	44250	0.20	0.13	0.10	0.07	X*	X*						
	11337.56	0.15	44250	0.16	0.10	0.08	0.05	X*							
	13436.92	0.13	44250	0.14	0.10	0.07	0.05	X*							
SK 73/32	124.65	14	44250	9.83	6.49	4.91	3.24	X	X	X	X*				
	141.11	12	44250	8.43	5.56	4.21	2.78	X	X	X	X*				
	171.23	10	44250	7.02	4.63	3.51	2.32	X	X	X	X*				
	226.73	7.7	44250	5.41	3.57	2.70	1.78	X	X	X	X*				

* Caution - The motor power may exceed the gear unit's mechanical torque capacity
◈ The mechanical power limit of the solid input shaft type "W" may limit the reducer rating.
All ratings are mechanical. See page 14 for thermal considerations.

lb	W	56C	140TC	180TC	210TC
SK 73/22	527	522	531	540	–
SK 73/23	531	536	542	–	–
SK 73/32	551	556	556	564	584

Send Quote Requests to info@automatedpt.com
Call +1(800)985-6929 To Order or Order Online At Nordgearmotors.com

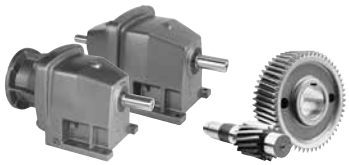

SK 82 , SK 83
NEMA-C + W
Ratings & Combinations

Model Type	Gear Ratio i_{tot}	Output Speed n_2 1750 rpm [rpm]	Output Torque* $T_{2\,max}$ [lb-in]	Maximum input power◈ Solid input shafts type "W" Input Speed 1750 rpm [hp]	1150 rpm [hp]	875 rpm [hp]	580 rpm [hp]	NEMA C-Face* Available Combinations 56C	140TC	180TC	210TC	250TC	280TC	320TC	360TC
SK 82	2.89	606	27674	100.00	66.00	50.00	33.00			X	X	X	X	X	X
	3.62	483	34958	100.00	66.00	50.00	33.00			X	X	X	X	X	X
	4.43	395	38444	100.00	66.00	50.00	33.00			X	X	X	X	X	X
	5.29	331	42338	100.00	66.00	50.00	33.00			X	X	X	X	X	X
	6.19	283	38090	100.00	66.00	50.00	33.00			X	X	X	X	X	X
	7.39	237	55366	100.00	66.00	50.00	33.00			X	X	X	X	X	X
	8.82	198	58136	100.00	66.00	50.00	33.00			X	X	X	X	X	X
	10.33	169	60764	100.00	66.00	50.00	33.00			X	X	X	X	X	X
	11.84	148	63145	100.00	66.00	50.00	33.00			X	X	X	X	X	X
	14.29	122	58242	100.00	66.00	50.00	33.00			X	X	X	X	X	X
	16.56	106	58224	97.93	64.63	48.96	32.32			X	X	X	X	X	X
	21.94	80	64127	81.40	53.72	40.70	26.86							X	X
	26.48	66	58330	61.08	40.32	30.54	20.16							X	X*
	26.62	66	56259	58.92	38.88	29.46	19.44					X	X		
	32.12	54	58330	49.98	32.99	24.99	16.49					X	X		
	40.45	43	36674	25.02	16.51	12.51	8.26			X	X	X	X*		
	48.82	36	47082	26.89	17.75	13.45	8.87			X	X	X	X*		
SK 83	21.04	83	70800	60.00	39.60	30.00	19.80			X	X	X	X	X	X*
	24.42	72	70800	60.00	39.60	30.00	19.80			X	X	X	X	X	X*
	28.03	62	71951	60.00	39.60	30.00	19.80			X	X	X	X	X	X*
	32.52	54	75668	60.00	39.60	30.00	19.80			X	X	X	X	X	X*
	39.08	45	79650	56.87	37.53	28.44	18.77			X	X	X	X	X	X*
	44.38	39	78677	48.69	32.13	24.34	16.07			X	X	X	X	X	X*
	51.51	34	79031	42.63	28.14	21.32	14.07			X	X	X	X	X*	X*
	61.89	28	79650	35.39	23.35	17.69	11.68			X	X	X	X	X*	X*
	70.24	25	79296	31.45	20.76	15.73	10.38			X	X	X	X		
	80.62	22	79473	27.74	18.31	13.87	9.15			X	X	X	X*		
	104.00	17	81243	21.91	14.46	10.96	7.23			X	X	X	X*		
	136.78	13	65313	13.47	8.89	6.74	4.45			X	X				
	164.70	11	79031	13.79	9.10	6.90	4.55			X	X	X*	X*		
	216.61	8.1	78677	10.11	6.67	5.06	3.34			X	X				

* Caution - The motor power may exceed the gear unit's mechanical torque capacity
◈ The mechanical power limit of the solid input shaft type "W" may limit the reducer rating.
All ratings are mechanical. See page 14 for thermal considerations.

lb	W	180TC	210TC	250TC	280TC	320TC	360TC
SK 82	935	761	772	827	827	891	1012
SK 83	787	778	789	844	844	908	1049

Send Quote Requests to info@automatedpt.com
Call +1(800)985-6929 To Order or Order Online At Nordgearmotors.com

SK 83/32, SK 83/33N
SK 83/42 NEMA-C + W
Ratings & Combinations

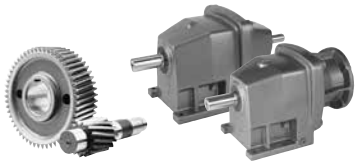

DRIVESYSTEMS

W + NEMA

Model Type	Gear Ratio	Output Speed	Output Torque*	Maximum input power◈ Solid input shafts type "W"				NEMA C-Face* Available Combinations							
				Input Speed											
	i_{tot}	n_2 1750 rpm	$T_{2\ max}$	1750 rpm	1150 rpm	875 rpm	580 rpm								
		[rpm]	[lb-in]	[hp]	[hp]	[hp]	[hp]	56C	140TC	180TC	210TC	250TC	280TC	320TC	360TC
SK 83/32	724.73	2.4	70800	2.70	1.78	1.35	0.89	X	X	X*	X*				
	900.50	1.9	70800	2.13	1.41	1.07	0.70	X	X	X*	X*				
	1155.49	1.5	70800	1.69	1.11	0.84	0.56	X	X*	X*	X*				
	1368.62	1.3	70800	1.46	0.96	0.73	0.48	X	X*	X*					
	1687.12	1	70800	1.12	0.74	0.56	0.37	X	X*	X*					
	2045.46	0.86	70800	1.02	0.67	0.51	0.34	X	X*						
	2866.13	0.61	70800	0.74	0.49	0.37	0.24	X*	X*						
	3560.53	0.49	70800	0.60	0.40	0.30	0.20	X*	X*						
SK 83/33N	4542.15	0.39	70800	0.49	0.32	0.25	0.16	X*	X*	X*					
	5427.09	0.32	70800	0.41	0.27	0.21	0.14	X*	X*	X*					
	6942.82	0.25	70800	0.33	0.22	0.17	0.11	X*	X*						
	8575.90	0.2	70800	0.28	0.18	0.14	0.09	X*	X*						
	10860.37	0.16	70800	0.23	0.15	0.12	0.08	X*	X*						
	12783.24	0.14	70800	0.21	0.14	0.11	0.07	X*							
SK 83/42	126.50	14	70800	15.00	9.90	7.50	4.95	X	X	X	X	X*			
	148.94	12	70800	13.48	8.90	6.74	4.45	X	X	X	X	X*			
	200.37	8.7	70800	9.77	6.45	4.89	3.23	X	X	X	X*	X*			
	235.92	7.4	70800	8.31	5.49	4.16	2.74	X	X	X	X*	X*			
	275.58	6.4	70800	7.19	4.75	3.59	2.37	X	X	X	X*	X*			
	374.99	4.7	70800	5.28	3.48	2.64	1.74	X	X	X	X*	X*			
	437.84	4	70800	4.49	2.97	2.25	1.48	X	X	X*	X*	X*			
	525.40	3.3	70800	3.71	2.45	1.85	1.22	X	X	X*	X*	X*			

* Caution - The motor power may exceed the gear unit's mechanical torque capacity
◈ The mechanical power limit of the solid input shaft type "W" may limit the reducer rating.
All ratings are mechanical. See page 14 for thermal considerations.

lb	W	56C	140TC	180TC	210TC	250TC
SK 83/32	787	783	791	800	800	–
SK 83/33N	794	796	805	814	–	–
SK 83/42	842	823	831	847	847	899

Send Quote Requests to info@automatedpt.com
Call +1(800)985-6929 To Order or Order Online At Nordgearmotors.com

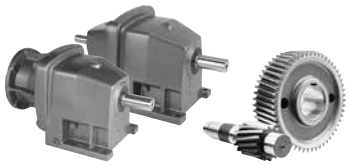

SK 92 , SK 93
NEMA-C + W
Ratings & Combinations

Model Type	Gear Ratio i_{tot}	Output Speed n_2 1750 rpm [rpm]	Output Torque* $T_{2\,max}$ [lb-in]	Maximum input power◈ Solid input shafts type "W" Input Speed 1750 rpm [hp]	1150 rpm [hp]	875 rpm [hp]	580 rpm [hp]	NEMA C-Face* Available Combinations 56C	140TC	180TC	210TC	250TC	280TC	320TC	360TC
SK 92	3.51	499	49312	200.00	132.00	100.00	66.00								X
	5.68	308	63826	200.00	132.00	100.00	66.00			X	X	X	X	X	X
	6.70	261	68605	200.00	132.00	100.00	66.00			X	X	X	X	X	X
	7.78	225	53852	192.25	126.89	96.13	63.44			X	X	X	X	X	X
	10.50	167	89491	200.00	132.00	100.00	66.00			X	X	X	X	X	X
	12.39	141	93739	200.00	132.00	100.00	66.00			X	X	X	X	X	X
	14.36	122	95350	184.57	121.82	92.29	60.91			X	X	X	X	X	X
	16.47	106	93925	157.97	104.26	78.99	52.13			X	X	X	X	X	X
	29.30	60	95359	90.78	59.92	45.39	29.96							X	X*
	35.47	49	85314	66.33	43.78	33.16	21.89					X	X		
SK 93	19.12	92	107970	100.00	66.00	50.00	33.00			X	X	X	X	X	X
	22.97	76	107970	100.00	66.00	50.00	33.00			X	X	X	X	X	X
	27.05	65	107970	100.00	66.00	50.00	33.00			X	X	X	X	X	X
	31.25	56	107970	95.94	63.32	47.97	31.66			X	X	X	X	X	X
	39.54	44	107970	75.38	49.75	37.69	24.87			X	X	X	X	X	X
	46.57	38	107970	65.10	42.97	32.55	21.48			X	X	X	X	X	X*
	53.80	33	108413	56.77	37.47	28.38	18.73			X	X	X	X	X	X*
	61.63	28	112395	49.93	32.96	24.97	16.48			X	X	X	X	X*	X*
	72.47	24	118590	45.16	29.81	22.58	14.90			X	X	X	X	X*	X*
	93.34	19	123900	37.35	24.65	18.68	12.33			X	X	X	X		
	109.14	16	102306	25.97	17.14	12.99	8.57			X	X	X	X*		
	123.05	14	123458	27.42	18.10	13.71	9.05					X	X		
	187.89	9.3	123723	18.26	12.05	9.13	6.02			X	X	X*	X*		

* Caution - The motor power may exceed the gear unit's mechanical torque capacity
◈ The mechanical power limit of the solid input shaft type "W" may limit the reducer rating.
All ratings are mechanical. See page 14 for thermal considerations.

lb	W	180TC	210TC	250TC	280TC	320TC	360TC
SK 92	1268	1160	1215	1215	1246	1279	1400
SK 93	1182	1184	1239	1239	1270	1303	1424

Send Quote Requests to info@automatedpt.com
Call +1(800)985-6929 To Order or Order Online At Nordgearmotors.com

SK 93/42, SK 93/43
SK 93/52 NEMA-C + W
Ratings & Combinations

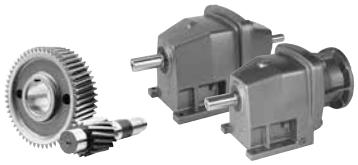

DRIVESYSTEMS

W + NEMA

Model Type	Gear Ratio	Output Speed	Output Torque*	Maximum input power◈ Solid input shafts type "W"				NEMA C-Face* Available Combinations							
				Input Speed											
	i_{tot}	n_2 1750 rpm	$T_{2\,max}$	1750 rpm	1150 rpm	875 rpm	580 rpm								
		[rpm]	[lb-in]	[hp]	[hp]	[hp]	[hp]	56C	140TC	180TC	210TC	250TC	280TC	320TC	360TC
SK 93/42	181.16	9.7	107970	15.00	9.90	7.50	4.95	X	X	X	X	X*			
	239.74	7.3	107970	12.51	8.25	6.25	4.13	X	X	X	X	X*			
	287.83	6.1	107970	10.45	6.90	5.23	3.45	X	X	X	X	X*			
	333.02	5.3	107970	9.08	5.99	4.54	3.00	X	X	X	X*	X*			
	457.30	3.8	107970	6.51	4.30	3.25	2.15	X	X	X	X*	X*			
	548.76	3.2	107970	5.48	3.62	2.74	1.81	X	X	X	X*	X*			
	756.82	2.3	107970	3.94	2.60	1.97	1.30	X	X	X*	X*	X*			
	813.46	2.2	107970	3.77	2.49	1.88	1.24	X	X	X*	X*	X*			
	1091.47	1.6	107970	2.74	1.81	1.37	0.90	X	X	X*	X*	X*			
	1298.54	1.3	107970	2.23	1.47	1.11	0.73	X	X	X*	X*				
	1641.59	1.1	107970	1.88	1.24	0.94	0.62			X*	X*				
SK 93/43	2204.72	0.79	107970	1.35	0.89	0.68	0.45	X	X*	X*					
	2713.63	0.64	107970	1.10	0.72	0.55	0.36	X	X*	X*					
	3724.20	0.47	107970	0.86	0.57	0.43	0.28	X*	X*	X*					
	4302.39	0.41	107970	0.76	0.50	0.38	0.25	X*	X*	X*					
	5782.96	0.3	107970	0.57	0.37	0.28	0.19	X*	X*	X*					
	6961.72	0.25	107970	0.48	0.32	0.24	0.16	X*	X*	X*					
	8512.06	0.21	107970	0.41	0.27	0.21	0.14	X*	X*						
	11264.73	0.16	107970	0.33	0.22	0.16	0.11	X*	X*						
	13913.25	0.13	107970	0.28	0.18	0.14	0.09	X*	X*						
SK 93/52	106.25	16	107970	25.00	16.50	12.50	8.25					X	X*		
	127.50	14	107970	23.98	15.83	11.99	7.91			X	X	X	X*		
	161.32	11	107970	18.84	12.44	9.42	6.22			X	X	X*	X*		

* Caution - The motor power may exceed the gear unit's mechanical torque capacity
◈ The mechanical power limit of the solid input shaft type "W" may limit the reducer rating.
All ratings are mechanical. See page 14 for thermal considerations.

lb	W	56C	140TC	180TC	210TC	250TC	280TC
SK 93/42	1237	1217	1226	1241	1241	1294	–
SK 93/43	1247	1243	1252	1261	–	–	–
SK 93/52	1301	–	–	1305	1305	1358	1358

Send Quote Requests to info@automatedpt.com
Call +1(800)985-6929 To Order or Order Online At Nordgearmotors.com

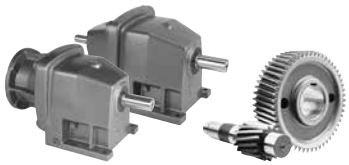

SK 102 , SK 103
NEMA-C + W
Ratings & Combinations

Model Type	Gear Ratio i_{tot}	Output Speed n_2 1750 rpm [rpm]	Output Torque* $T_{2\,max}$ [lb-in]	Maximum input power◈ Solid input shafts type "W" Input Speed 1750 rpm [hp]	1150 rpm [hp]	875 rpm [hp]	580 rpm [hp]	NEMA C-Face* Available Combinations 56C	140TC	180TC	210TC	250TC	280TC	320TC	360TC
SK 102	4.28	409	83075	268.00	176.88	134.00	88.44								
	5.23	335	93828	268.00	176.88	134.00	88.44								X
	6.24	280	101695	268.00	176.88	134.00	88.44								X
	7.50	233	99740	268.00	176.88	134.00	88.44								X
	9.96	176	132785	268.00	176.88	134.00	88.44								X
	11.88	147	139591	268.00	176.88	134.00	88.44								X
	14.29	122	147087	268.00	176.88	134.00	88.44								X
	16.63	105	153698	256.06	169.00	128.03	84.50								X
	19.37	90	148751	212.42	140.20	106.21	70.10								X
SK 103	21.19	83	177000	150.00	99.00	75.00	49.50			X	X	X	X	X	X
	25.30	69	177000	150.00	99.00	75.00	49.50			X	X	X	X	X	X
	29.62	59	177000	150.00	99.00	75.00	49.50			X	X	X	X	X	X
	37.90	46	177000	129.19	85.26	64.59	42.63			X	X	X	X	X	X
	45.25	39	177000	109.53	72.29	54.76	36.14			X	X	X	X	X	X
	52.98	33	177000	92.68	61.17	46.34	30.58			X	X	X	X	X	X
	60.71	29	177000	81.44	53.75	40.72	26.88			X	X	X	X	X	X
	70.38	25	177000	70.21	46.34	35.11	23.17			X	X	X	X	X	X
	81.40	21	181425	60.45	39.90	30.23	19.95			X	X	X	X	X	X*
	112.53	16	204966	52.03	34.34	26.02	17.17							X	
	136.51	13	203550	41.99	27.71	20.99	13.86					X	X		
	207.47	8.4	204966	27.32	18.03	13.66	9.01			X	X	X	X*		

* Caution - The motor power may exceed the gear unit's mechanical torque capacity
◈ The mechanical power limit of the solid input shaft type "W" may limit the reducer rating.
All ratings are mechanical. See page 14 for thermal considerations.

lb	W	180TC	210TC	250TC	280TC	320TC	360TC
SK 102	1810	–	–	–	-	-	2064
SK 103	1830	1667	1722	1753	1887	1887	2083

Send Quote Requests to info@automatedpt.com
Call +1(800)985-6929 To Order or Order Online At Nordgearmotors.com

SK 103/52, SK 103/53
NEMA-C + W
Ratings & Combinations

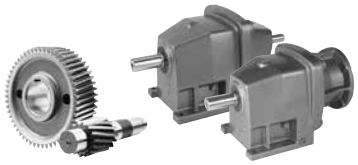

DRIVESYSTEMS

W + NEMA

Model Type	Gear Ratio	Output Speed	Output Torque*	Maximum input power◈ Solid input shafts type "W"				NEMA C-Face* Available Combinations							
				Input Speed											
	i_{tot}	n_2 1750 rpm	$T_{2\ max}$	1750 rpm	1150 rpm	875 rpm	580 rpm								
		[rpm]	[lb-in]	[hp]	[hp]	[hp]	[hp]	56C	140TC	180TC	210TC	250TC	280TC	320TC	360TC
SK 103/52	105.36	17	177000	30.00	19.80	15.00	9.90					X	X		
	122.42	14	177000	30.00	19.80	15.00	9.90					X	X		
	154.63	11	177000	30.00	19.80	15.00	9.90			X	X	X	X		
	184.62	9.5	177000	26.68	17.61	13.34	8.80			X	X	X	X*		
	244.77	7.1	177000	19.94	13.16	9.97	6.58			X	X	X*	X*		
	296.69	5.9	177000	16.57	10.94	8.28	5.47	X	X	X	X	X*	X*		
	340.13	5.1	177000	14.32	9.45	7.16	4.73			X	X	X*	X*		
	467.81	3.7	177000	10.39	6.86	5.20	3.43	X	X	X	X	X*	X*		
	642.31	2.7	177000	7.58	5.00	3.79	2.50	X	X	X	X*	X*	X*		
	816.55	2.1	177000	5.90	3.89	2.95	1.95	X	X	X	X*	X*	X*		
	943.57	1.9	177000	5.34	3.52	2.67	1.76	X	X	X	X*	X*	X*		
	1148.61	1.5	177000	4.21	2.78	2.11	1.39	X	X	X*	X*	X*	X*		
	1412.72	1.2	177000	3.37	2.22	1.69	1.11	X	X	X*	X*				
	1701.72	1.0	177000	2.81	1.85	1.40	0.93			X*	X*				
	2037.08	0.86	177000	2.42	1.59	1.21	0.80			X*	X*				
SK 103/53	2722.11	0.64	177000	1.50	0.99	0.75	0.50	X	X*	X*	X				
	3462.24	0.51	177000	1.43	0.95	0.72	0.47	X	X*	X*	X				
	4220.92	0.41	177000	1.15	0.76	0.58	0.38	X	X*	X*	X				
	5797.20	0.30	177000	0.90	0.59	0.45	0.30	X*	X*	X*	X				
	7149.21	0.24	177000	0.73	0.48	0.36	0.24	X*	X*	X*	X				
	8459.94	0.21	177000	0.64	0.42	0.32	0.21	X*	X*	X*					
	11277.49	0.16	177000	0.50	0.33	0.25	0.17	X*	X*	X*					
	14340.31	0.12	177000	0.39	0.26	0.20	0.13	X*	X*	X*					

* Caution - The motor power may exceed the gear unit's mechanical torque capacity
◈ The mechanical power limit of the solid input shaft type "W" may limit the reducer rating.
All ratings are mechanical. See page 14 for thermal considerations.

lb	W	56C	140TC	180TC	210TC	250TC	280TC
SK 103/52	1784	1764	1773	1788	1788	1841	1841
SK 103/53	1803	1799	1808	1817	1817	–	–

Send Quote Requests to info@automatedpt.com
Call +1(800)985-6929 To Order or Order Online At Nordgearmotors.com

In-line Dimensions

Dimensions

- Gearmotors
- Reducers > C-Face
- Reducers > Input Shaft
- Options
- Shafts

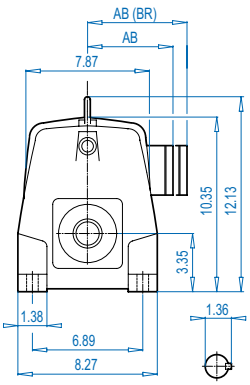

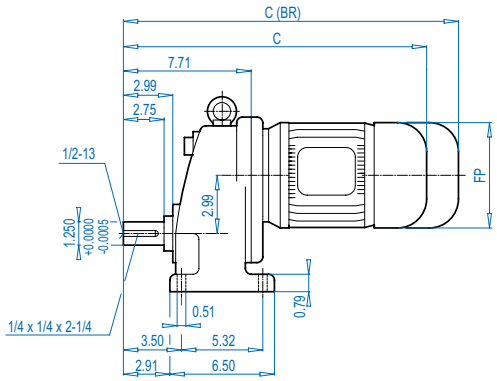

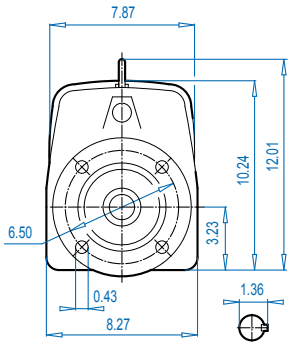

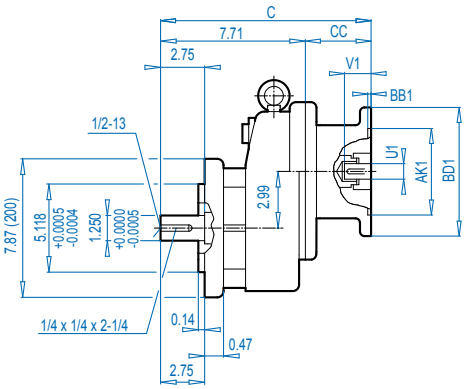

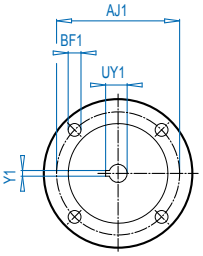

DRIVESYSTEMS

www.nord.com

UNICASE™

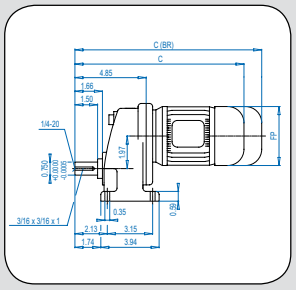

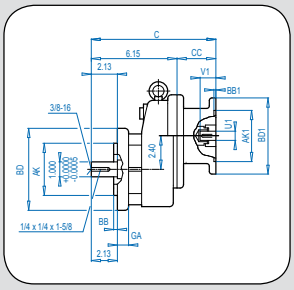

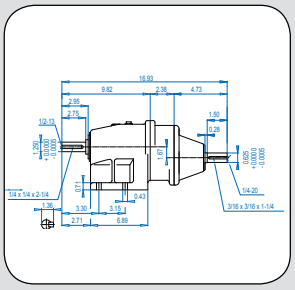

SK 11E + Motor
SK 11EF + Motor

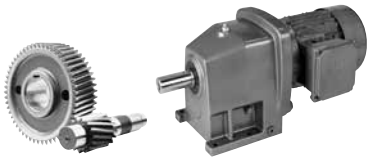

DRIVESYSTEMS

SK 11E

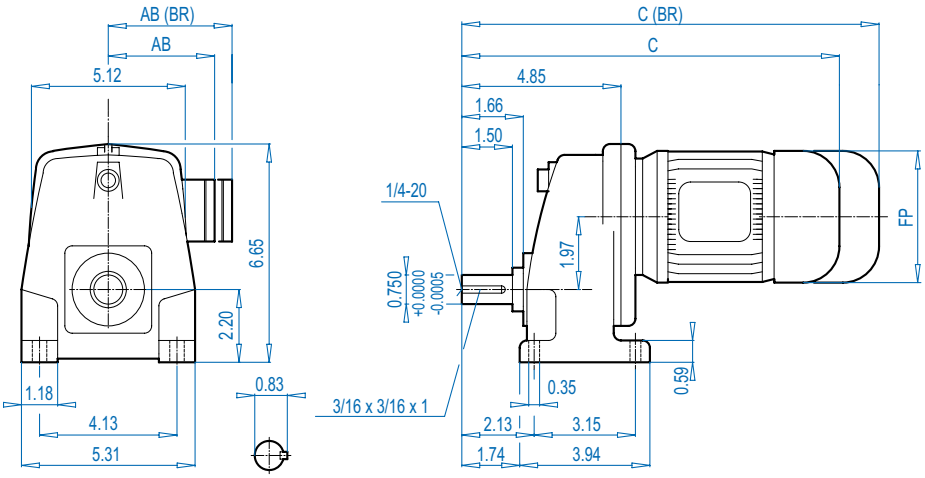

SK 11EF

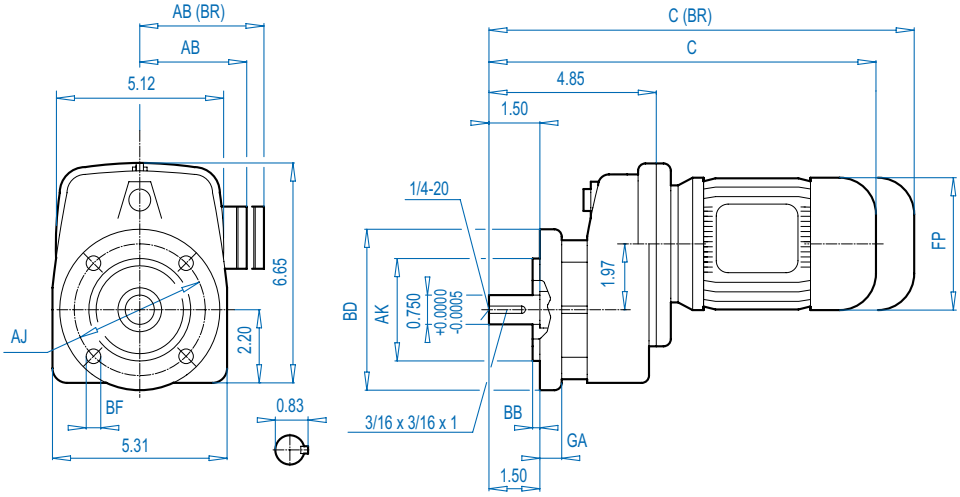

ALTERNATE SHAFTS SEE PAGE 239

Mounting Flange

BD (mm)	AJ	AK	BB	BF	GA
4.72 (120)	3.94	3.150 $^{+0.0005}_{-0.0004}$	0.12	0.28	0.39
5.51 (140)	4.53	3.740 $^{+0.0005}_{-0.0004}$	0.12	0.35	0.39

Motor Dimensions

Standard efficiency	63S/L	71S/L	80S/L	90S/L	100L	112M		For Other Connection Possibilities please see ⇨📖 236
Energy efficiency			80LH	90SH/LH	100LH		112MH	
AB	4.53	4.88	5.59	5.79	6.65	7.05	7.05	
AB (BR)	4.84	5.24	5.63	5.83	6.26	6.69	6.69	
C	12.56	14.13	15.11	16.73	17.91	18.82	19.79	
C (BR)	14.76	16.41	17.63	19.68	21.49	22.48	23.45	
FP	4.84	5.43	6.14	6.92	7.63	8.58	8.58	



(BR) denotes Brakemotor

Send Quote Requests to info@automatedpt.com
Call +1(800)985-6929 To Order or Order Online At Nordgearmotors.com

DRIVESYSTEMS

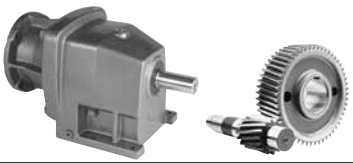

SK 11E + NEMA
SK 11EF + NEMA

SK 11E

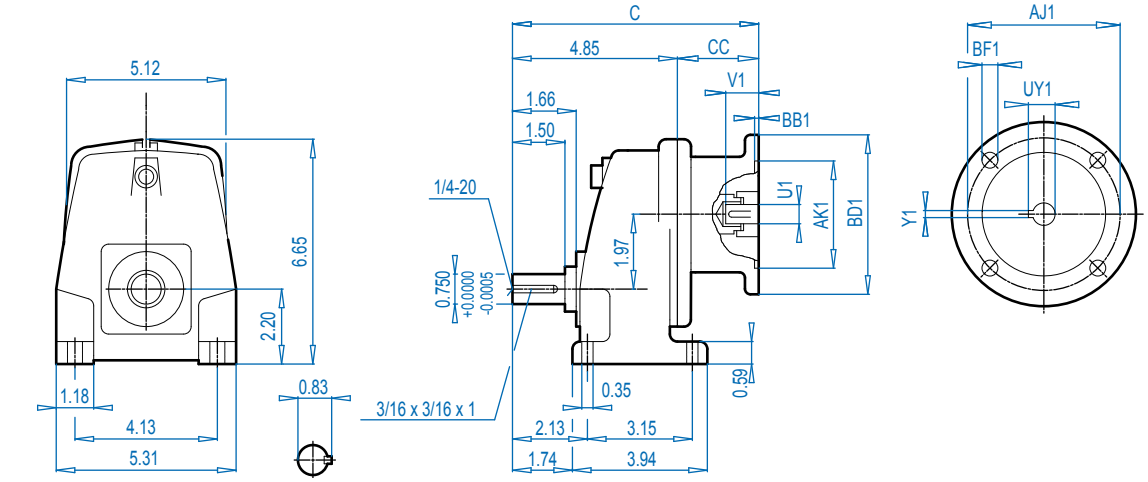

SK 11EF

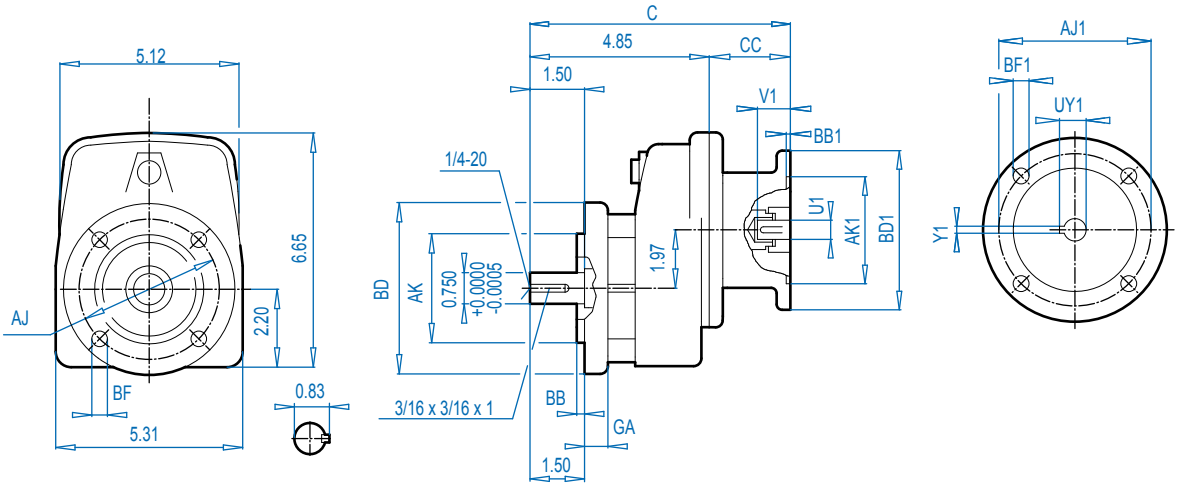

Mounting Flange

BD (mm)	AJ	AK	BB	BF	GA
4.72 (120)	3.94	3.150 $^{+0.0005}_{-0.0004}$	0.12	0.28	0.39
5.51 (140)	4.53	3.740 $^{+0.0005}_{-0.0004}$	0.12	0.35	0.39

NEMA Dimensions

Type	AJ1	AK1	BB1	BD1	BF1	U1	V1	UY1	Y1	C	CC
56C	5.88	4.500	0.18	6.54	0.43	0.625	2.06	0.71	0.188	9.35	4.50
140TC	5.88	4.500	0.18	6.54	0.43	0.875	2.12	0.96	0.188	9.28	4.45
180TC	7.25	8.500	0.23	9.17	0.59	1.125	2.62	1.24	0.250	10.48	5.65

ALTERNATE SHAFTS SEE PAGE 239

Send Quote Requests to info@automatedpt.com
Call +1(800)985-6929 To Order or Order Online At Nordgearmotors.com

SK 11E - W
SK 11EF - W

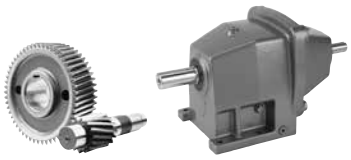

DRIVESYSTEMS

SK 11E

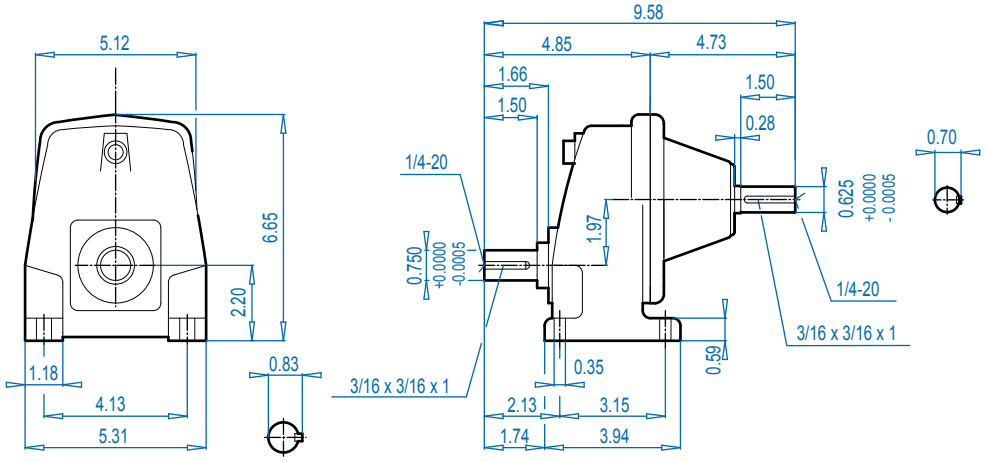

SK 11EF

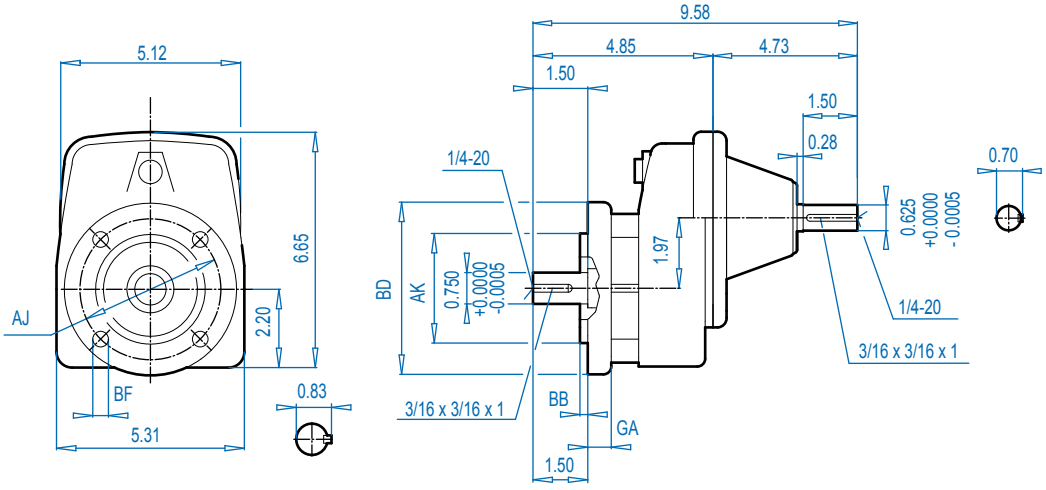

ALTERNATE SHAFTS SEE PAGE 239

Mounting Flange

BD (mm)	AJ	AK	BB	BF	GA
4.72 (120)	3.94	$3.150^{+0.0005}_{-0.0004}$	0.12	0.28	0.39
5.51 (140)	4.53	$3.740^{+0.0005}_{-0.0004}$	0.12	0.35	0.39

Send Quote Requests to info@automatedpt.com
Call +1(800)985-6929 To Order or Order Online At Nordgearmotors.com

DRIVESYSTEMS



SK 21E + Motor
SK 21EF + Motor

SK 21E

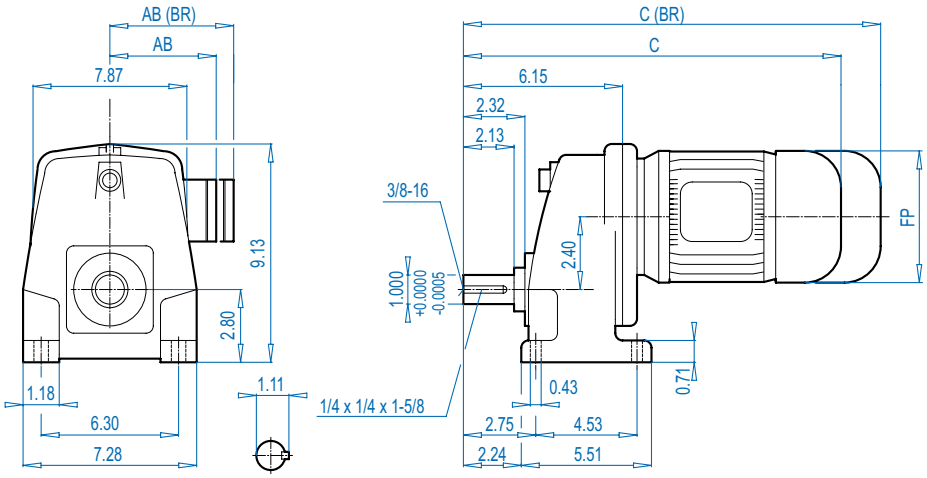

SK 21EF

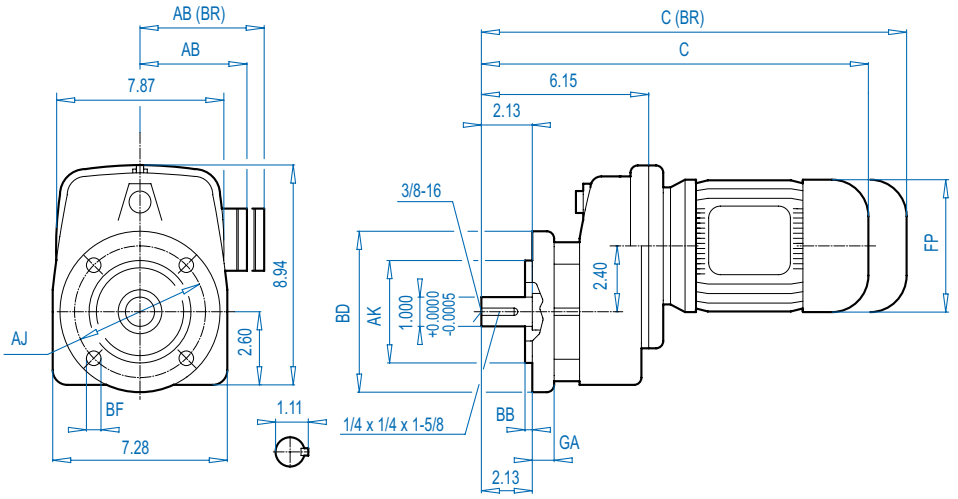

ALTERNATE SHAFTS SEE PAGE 239

Mounting Flange

BD (mm)	AJ	AK	BB	BF	GA
5.51 (140)	4.53	3.740 $^{+0.0005}_{-0.0004}$	0.12	0.35	0.39
6.30 (160)	5.12	4.331 $^{+0.0005}_{-0.0004}$	0.14	0.35	0.39

Motor Dimensions

Standard efficiency	100L	112M					For Other Connection Possibilities please see ⇨📖 236
Energy efficiency	100LH		112MH				
AB	6.65	7.05	7.05				
AB (BR)	6.26	6.69	6.69				
C	18.96	19.87	20.84				
C (BR)	22.55	23.53	24.50				
FP	7.63	8.58	8.58				

(BR) denotes Brakemotor

Send Quote Requests to info@automatedpt.com
Call +1(800)985-6929 To Order or Order Online At Nordgearmotors.com

SK 21E + NEMA
SK 21EF + NEMA

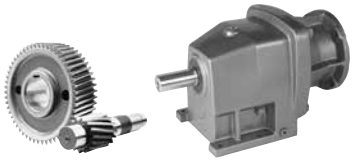

DRIVESYSTEMS

SK 21E

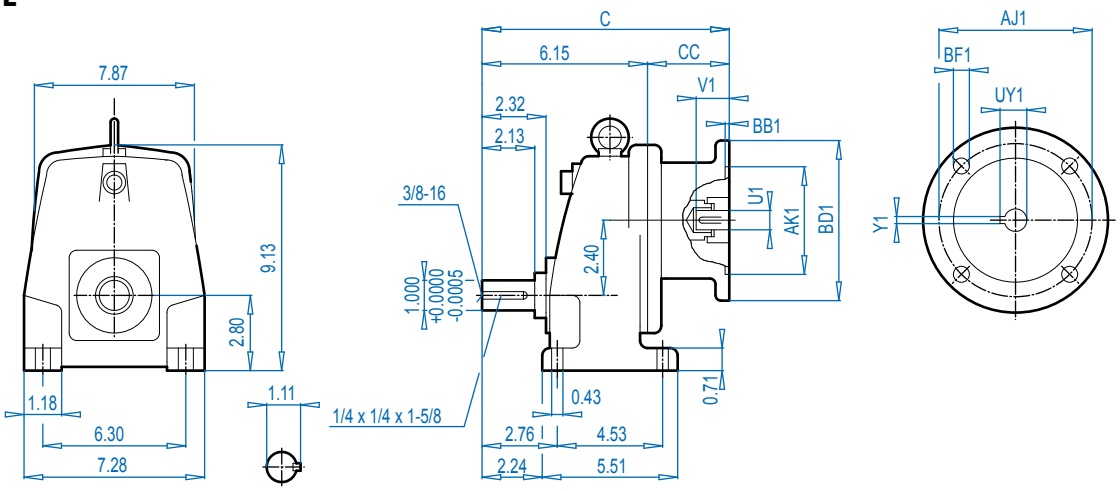

SK 21EF

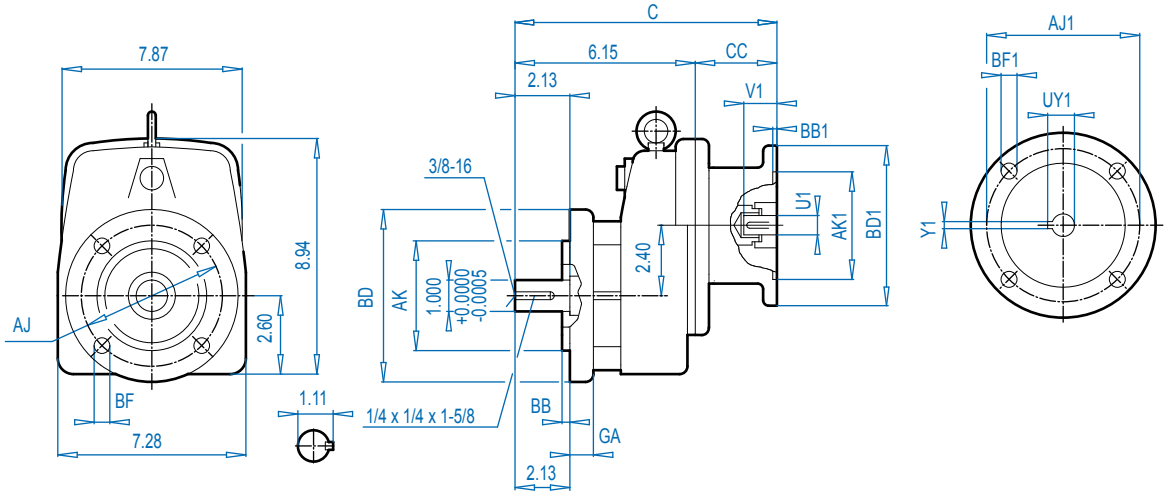

ALTERNATE SHAFTS SEE PAGE 239

Mounting Flange

BD (mm)	AJ	AK	BB	BF	GA
5.51 (140)	4.53	3.740 $^{+0.0005}_{-0.0004}$	0.12	0.35	0.39
6.30 (160)	5.12	4.331 $^{+0.0005}_{-0.0004}$	0.14	0.35	0.39

NEMA Dimensions

Type	AJ1	AK1	BB1	BD1	BF1	U1	V1	UY1	Y1	C	CC
56C	5.88	4.500	0.18	6.54	0.43	0.625	2.06	0.71	0.188	10.73	4.61
140TC	5.88	4.500	0.18	6.54	0.43	0.875	2.12	0.96	0.188	10.73	4.61
180TC	7.25	8.500	0.23	9.17	0.59	1.125	2.62	1.24	0.250	11.63	4.61

Send Quote Requests to info@automatedpt.com
Call +1(800)985-6929 To Order or Order Online At Nordgearmotors.com

DRIVESYSTEMS

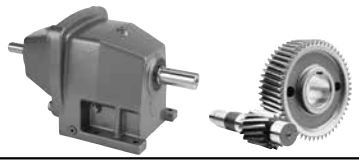

SK 21E - W
SK 21EF - W

SK 21E

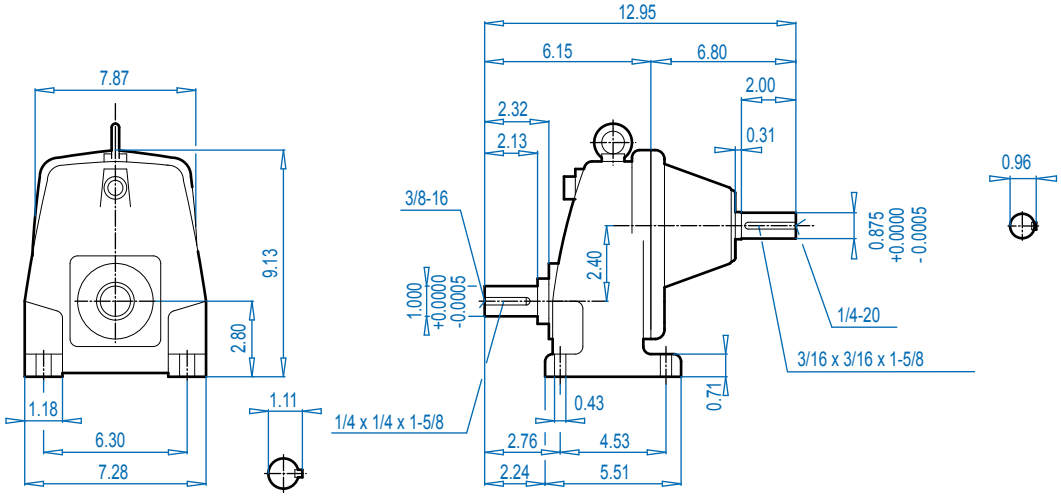

SK 21EF

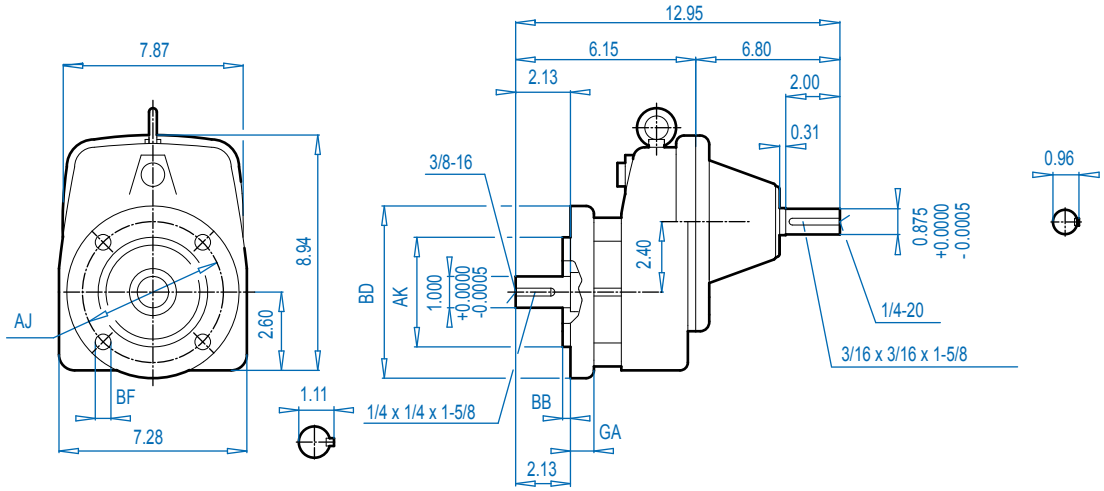

Mounting Flange

BD (mm)	AJ	AK	BB	BF	GA
5.51 (140)	4.53	3.740 $^{+0.0005}_{-0.0004}$	0.12	0.35	0.39
6.30 (160)	5.12	4.331 $^{+0.0005}_{-0.0004}$	0.14	0.35	0.39

ALTERNATE SHAFTS SEE PAGE 239

Send Quote Requests to info@automatedpt.com
Call +1(800)985-6929 To Order or Order Online At Nordgearmotors.com

SK 31E + Motor
SK 31EF + Motor

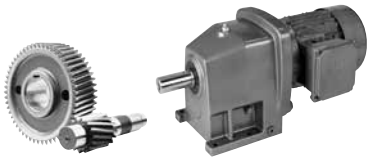

DRIVESYSTEMS

SK 31E

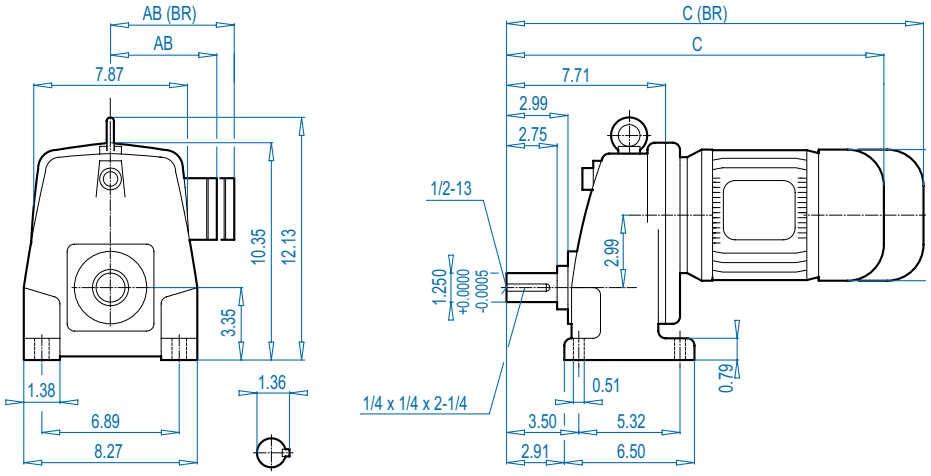

SK 31EF

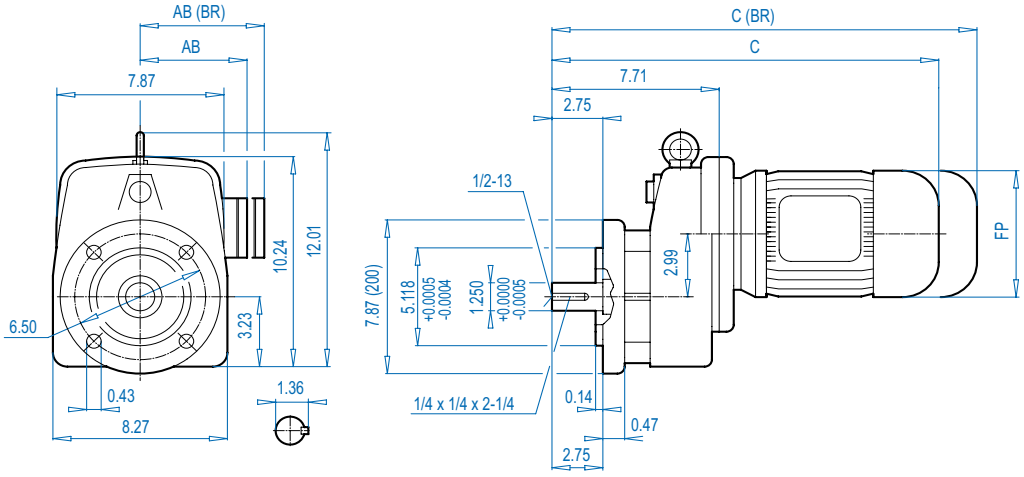

ALTERNATE SHAFTS SEE PAGE 239

Motor Dimensions

Standard efficiency	100L	112M		132S/M			For Other Connection Possibilities please see ⇨📖 236
Energy efficiency	100LH		112MH	132SH/MH			
AB	6.65	7.05	7.05	8.03			
AB (BR)	6.26	6.69	6.69	7.72			
C	20.54	21.44	22.41	24.83			
C (BR)	24.12	25.11	26.08	29.04			
FP	7.63	8.58	8.58	10.16			

(BR) denotes Brakemotor

Send Quote Requests to info@automatedpt.com
Call +1(800)985-6929 To Order or Order Online At Nordgearmotors.com

DRIVESYSTEMS

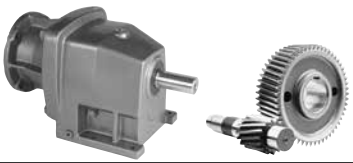

SK 31E + NEMA
SK 31EF + NEMA

SK 31E

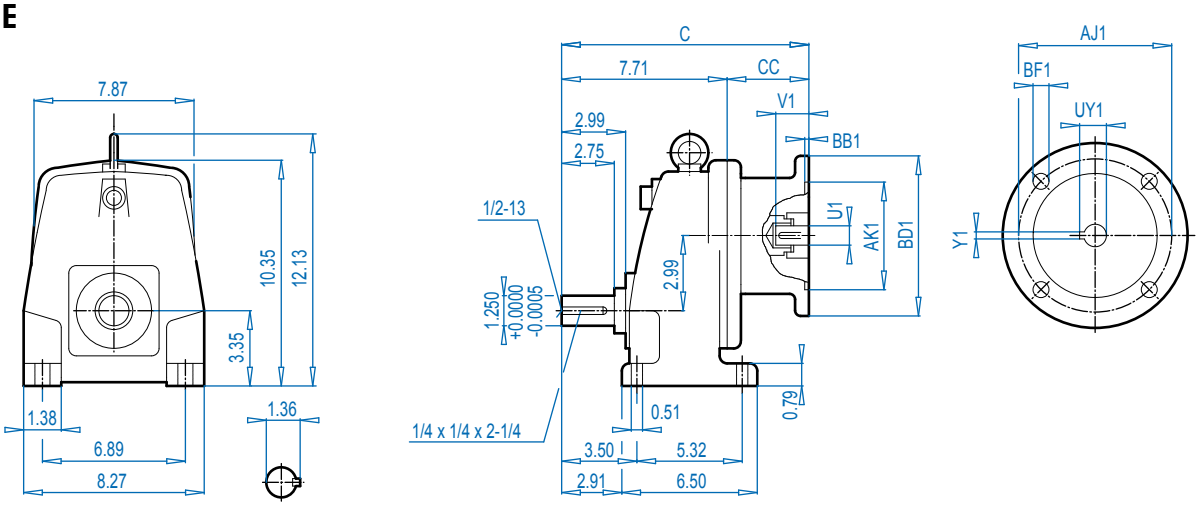

SK 31EF

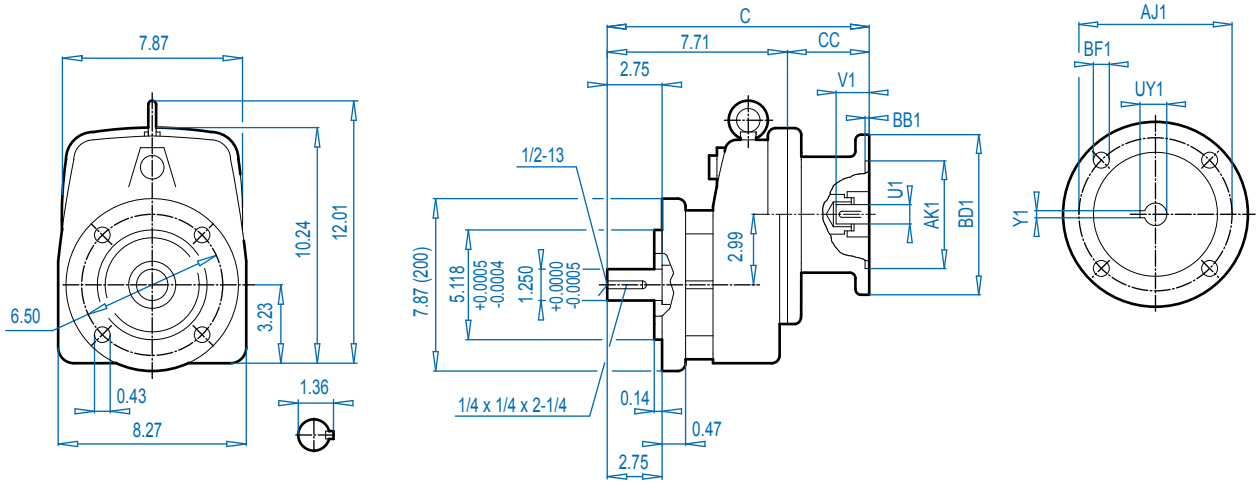

ALTERNATE SHAFTS SEE PAGE 239

NEMA Dimensions

Type	AJ1	AK1	BB1	BD1	BF1	U1	V1	UY1	Y1	C	CC
56C	5.88	4.500	0.18	6.54	0.43	0.625	2.06	0.71	0.188	12.30	4.61
140TC	5.88	4.500	0.18	6.54	0.43	0.875	2.12	0.96	0.188	12.30	4.61
180TC	7.25	8.500	0.23	9.17	0.59	1.125	2.62	1.24	0.250	14.33	6.65
210TC	7.25	8.500	0.39	9.17	0.59	1.375	3.12	1.52	0.312	14.33	6.65

Send Quote Requests to info@automatedpt.com
Call +1(800)985-6929 To Order or Order Online At Nordgearmotors.com

Send Quote Requests to info@automatedpt.com
Call +1(800)985-6929 To Order or Order Online At Nordgearmotors.com

SK 31E - W
SK 31EF - W

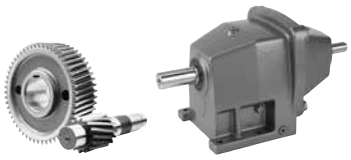

DRIVESYSTEMS

SK 31E

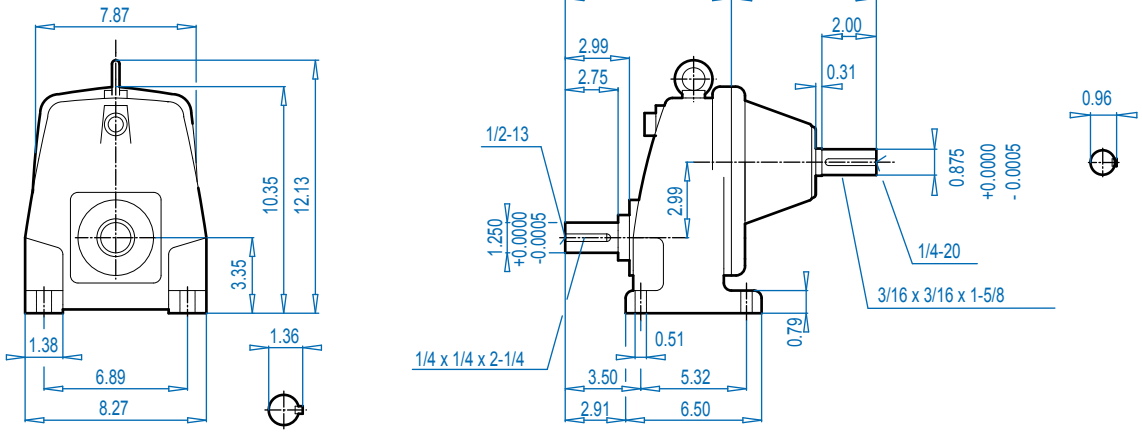

SK 31EF

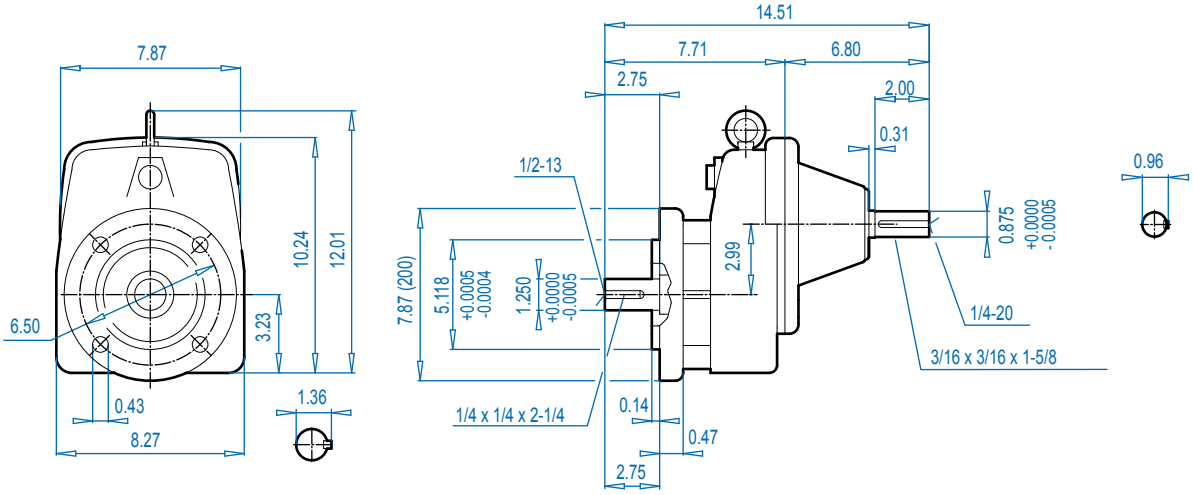

ALTERNATE SHAFTS SEE PAGE 239

Send Quote Requests to info@automatedpt.com
Call +1(800)985-6929 To Order or Order Online At Nordgearmotors.com

Send Quote Requests to info@automatedpt.com
Call +1(800)985-6929 To Order or Order Online At Nordgearmotors.com

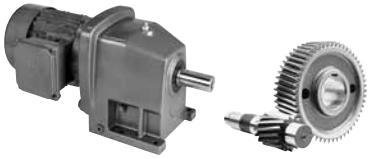

SK 41E + Motor
SK 41EF + Motor

SK 41E

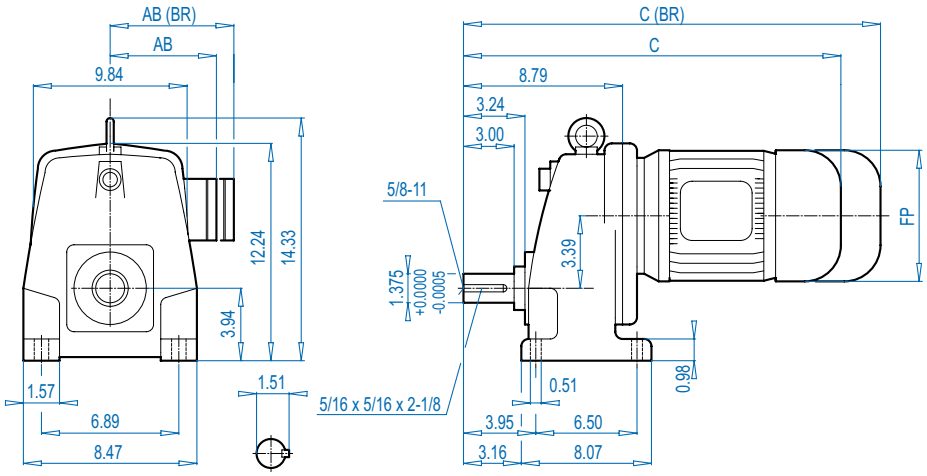

SK 41EF

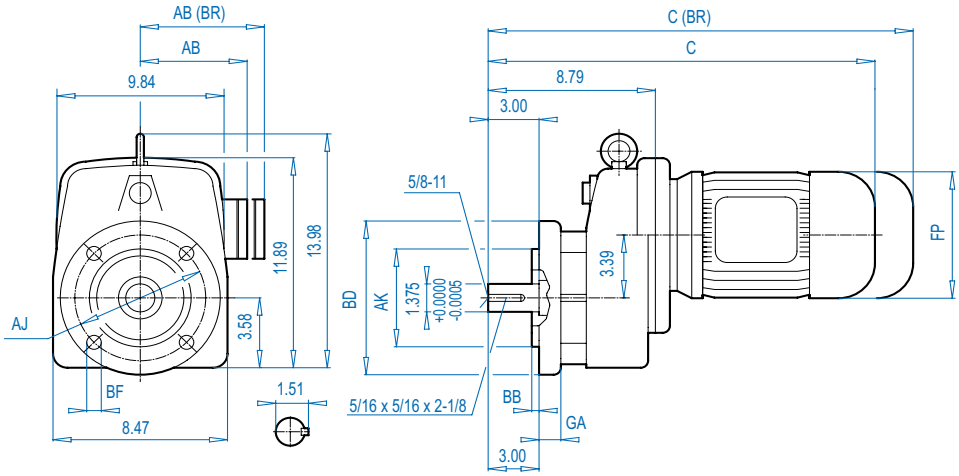

ALTERNATE SHAFTS SEE PAGE 239

Mounting Flange

BD (mm)	AJ	AK	BB	BF	GA
7.87 (200)	6.50	5.118 $^{+0.0005}_{-0.0004}$	0.14	0.43	0.55
9.84 (250)	8.46	7.087 $^{+0.0005}_{-0.0004}$	0.16	0.55	0.63

Motor Dimensions

Standard efficiency	132S/M	160M/L					For Other Connection Possibilities please see ⇨🕮 236
Energy efficiency	132SH/MH	160MH	160LH				
AB	8.03	8.90	8.90				
AB (BR)	7.72	8.90	8.90				
C	25.12	27.60	29.17				
C (BR)	29.33	34.17	35.91				
FP	10.16	12.60	12.60				

(BR) denotes Brakemotor

Send Quote Requests to info@automatedpt.com
Call +1(800)985-6929 To Order or Order Online At Nordgearmotors.com

SK 41E + NEMA
SK 41EF + NEMA

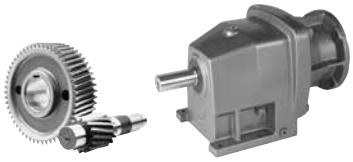

DRIVESYSTEMS

SK 41E

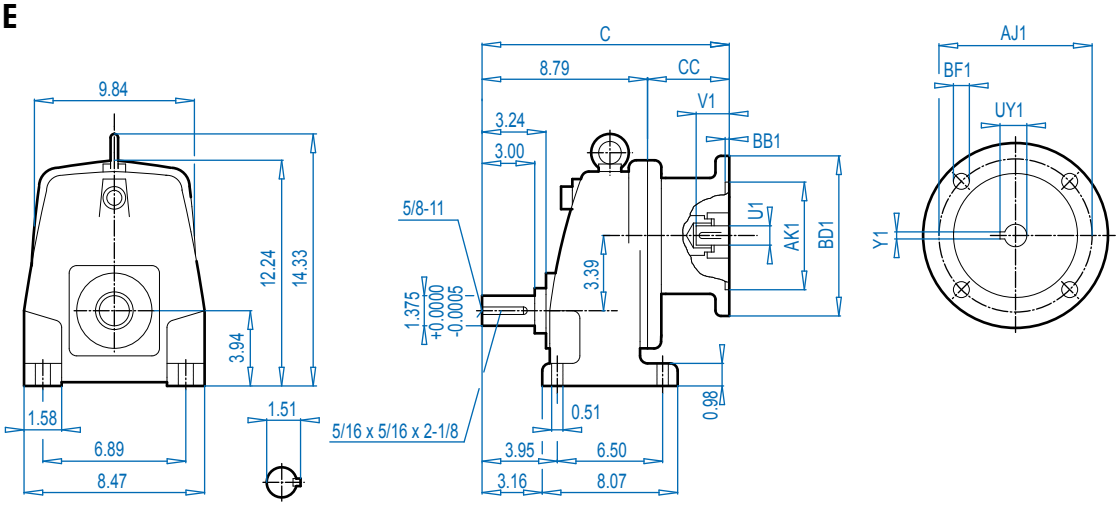

SK 41EF

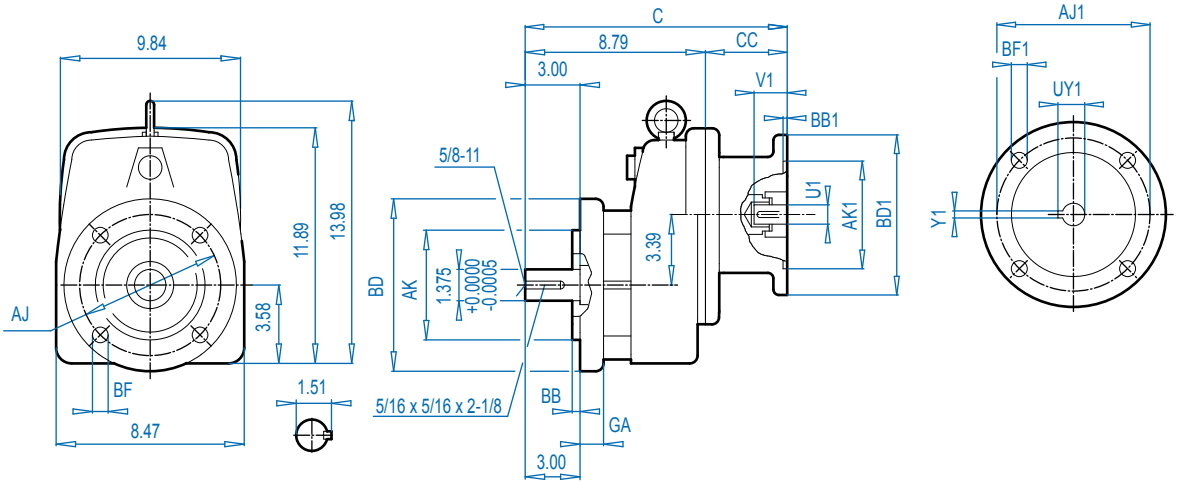

ALTERNATE SHAFTS SEE PAGE 239

Mounting Flange

BD (mm)	AJ	AK	BB	BF	GA
7.87 (200)	6.50	5.118 $^{+0.0005}_{-0.0004}$	0.14	0.43	0.55
9.84 (250)	8.46	7.087 $^{+0.0005}_{-0.0004}$	0.16	0.55	0.63

NEMA Dimensions

Type	AJ1	AK1	BB1	BD1	BF1	U1	V1	UY1	Y1	C	CC
56C	5.88	4.500	0.18	6.54	0.43	0.625	2.06	0.71	0.188	13.10	4.33
140TC	5.88	4.500	0.18	6.54	0.43	0.875	2.12	0.96	0.188	13.10	4.33
180TC	7.25	8.500	0.23	9.17	0.59	1.125	2.62	1.24	0.250	16.68	7.91
210TC	7.25	8.500	0.39	9.17	0.59	1.375	3.12	1.52	0.312	16.68	7.91
250TC	7.25	8.500	0.23	9.17	0.59	1.625	3.75	1.80	0.375	16.68	7.91

Send Quote Requests to info@automatedpt.com
Call +1(800)985-6929 To Order or Order Online At Nordgearmotors.com

DRIVESYSTEMS

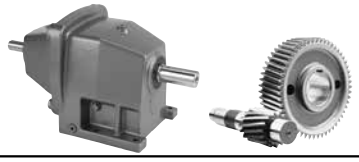

SK 41E - W
SK 41EF - W

SK 41E

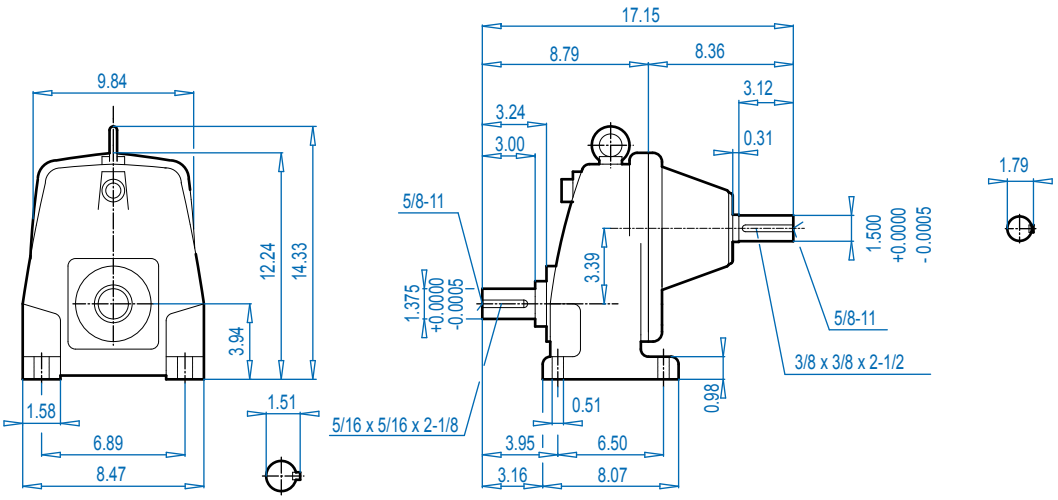

SK 41EF

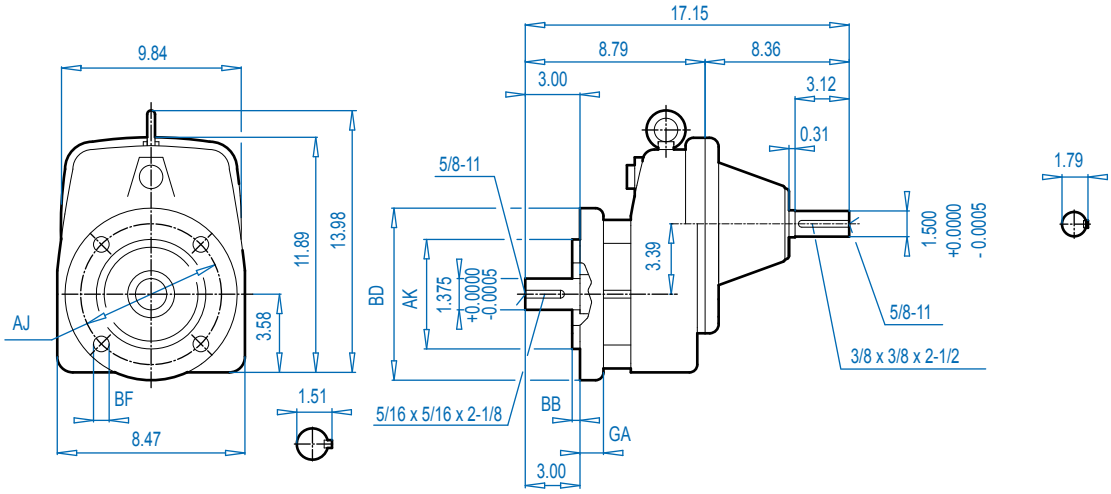

Mounting Flange

BD (mm)	AJ	AK	BB	BF	GA
7.87 (200)	6.50	5.118 $^{+0.0005}_{-0.0004}$	0.14	0.43	0.55
9.84 (250)	8.46	7.087 $^{+0.0005}_{-0.0004}$	0.16	0.55	0.63

ALTERNATE SHAFTS SEE PAGE 239

Send Quote Requests to info@automatedpt.com
Call +1(800)985-6929 To Order or Order Online At Nordgearmotors.com

SK 51E + Motor
SK 51EF + Motor

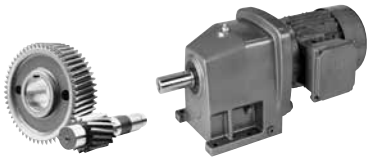

DRIVESYSTEMS

SK 51E

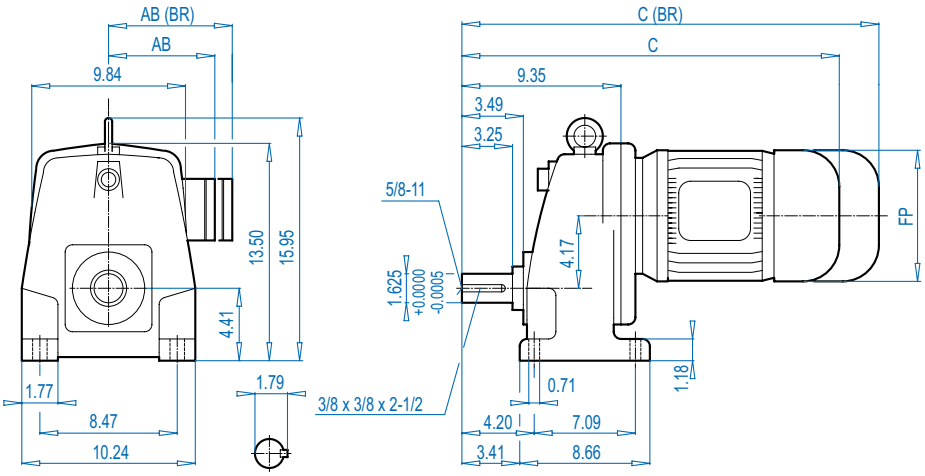

SK 51EF

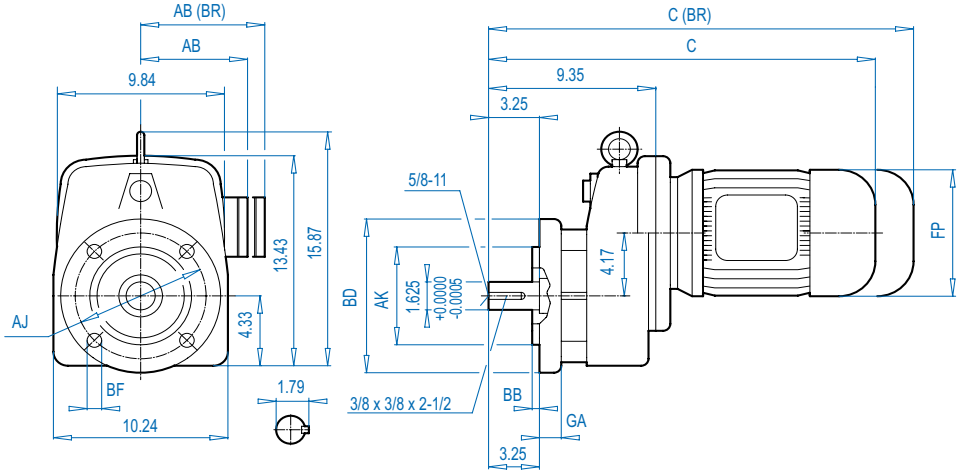

ALTERNATE SHAFTS SEE PAGE 239

Mounting Flange

BD (mm)	AJ	AK	BB	BF	GA
9.84 (250)	8.46	7.087 $^{+0.0005}_{-0.0004}$	0.16	0.55	0.63
11.81 (300)	10.43	9.055 $^{+0.0006}_{-0.0005}$	0.16	0.55	0.79

Motor Dimensions

Standard efficiency	160M/L		180MX/LX				For Other Connection Possibilities please see ⇨🕮 236
Energy efficiency	160MH	160LH		180MH/LH			
AB	8.90	8.90	8.90	10.20			
AB (BR)	8.90	8.90	8.90	10.20			
C	28.17	29.74	29.74	33.83			
C (BR)	37.74	36.47	36.47	37.97			
FP	12.60	12.60	12.60	14.09			

(BR) denotes Brakemotor

Send Quote Requests to info@automatedpt.com
Call +1(800)985-6929 To Order or Order Online At Nordgearmotors.com

DRIVESYSTEMS

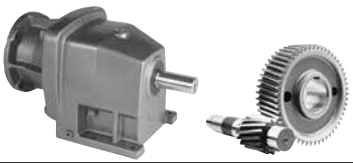

SK 51E + NEMA
SK 51EF + NEMA

SK 51E

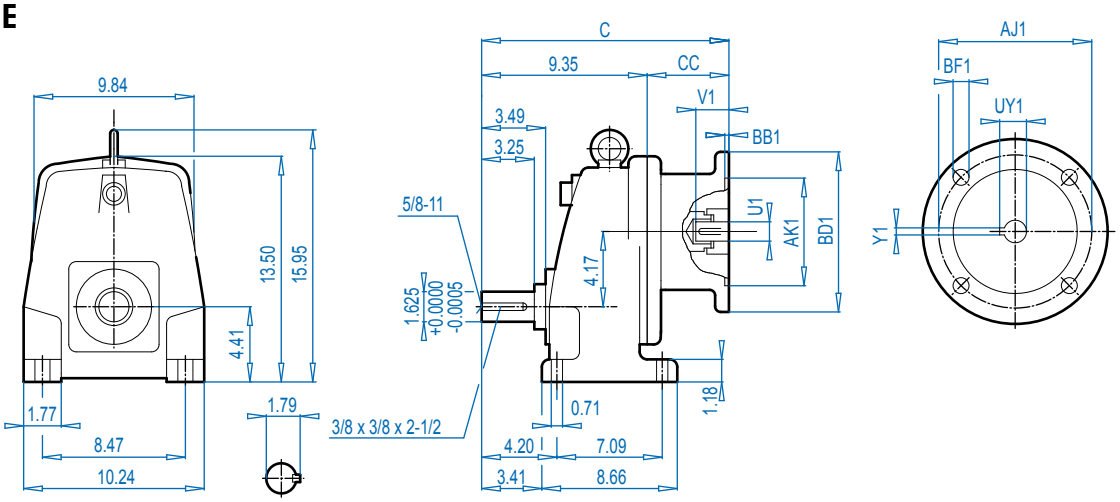

SK 51EF

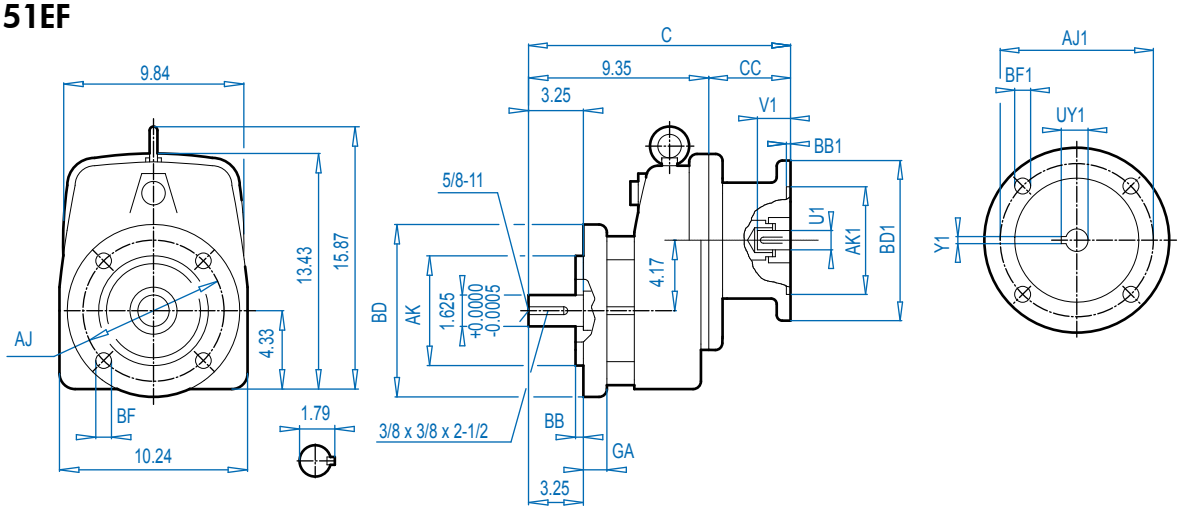

ALTERNATE SHAFTS SEE PAGE 239

Mounting Flange

BD (mm)	AJ	AK	BB	BF	GA
9.84 (250)	8.46	7.087 $^{+0.0005}_{-0.0004}$	0.16	0.55	0.63
11.81 (300)	10.43	9.055 $^{+0.0006}_{-0.0005}$	0.16	0.55	0.79

NEMA Dimensions

Type	AJ1	AK1	BB1	BD1	BF1	U1	V1	UY1	Y1	C	CC
56C	5.88	4.500	0.18	6.54	0.43	0.625	2.06	0.71	0.188	13.66	4.33
140TC	5.88	4.500	0.18	6.54	0.43	0.875	2.12	0.96	0.188	14.96	5.63
180TC	7.25	8.500	0.23	9.17	0.59	1.125	2.62	1.24	0.250	17.25	7.91
210TC	7.25	8.500	0.39	9.17	0.59	1.375	3.12	1.52	0.312	17.25	7.91
250TC	7.25	8.500	0.23	9.17	0.59	1.625	3.75	1.80	0.375	17.25	7.91
280TC	9.00	10.500	0.23	13.78	0.59	1.875	4.38	2.03	0.500	17.66	8.54

Send Quote Requests to info@automatedpt.com
Call +1(800)985-6929 To Order or Order Online At Nordgearmotors.com

SK 51E - W
SK 51EF - W

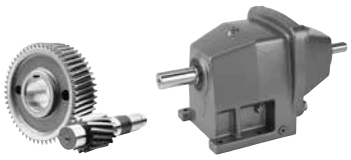

DRIVESYSTEMS

SK 51E

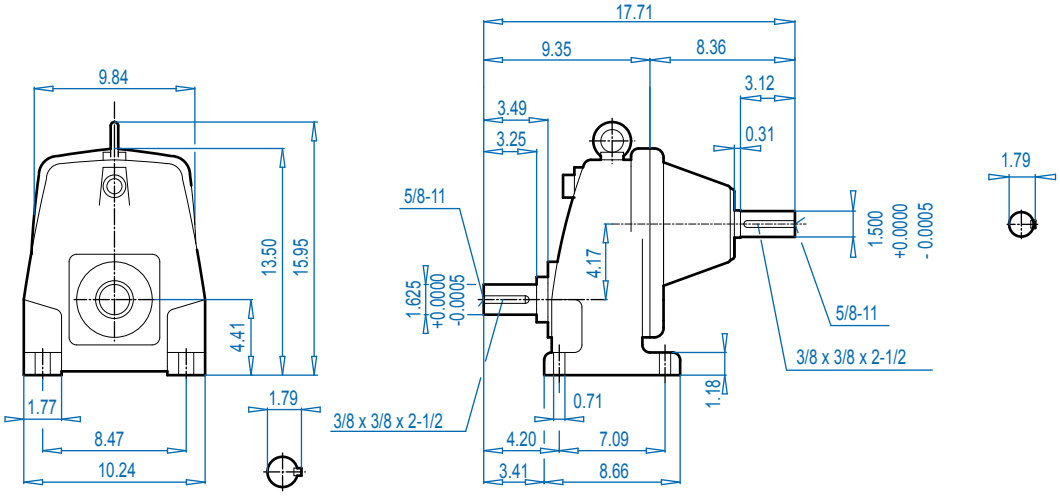

SK 51EF

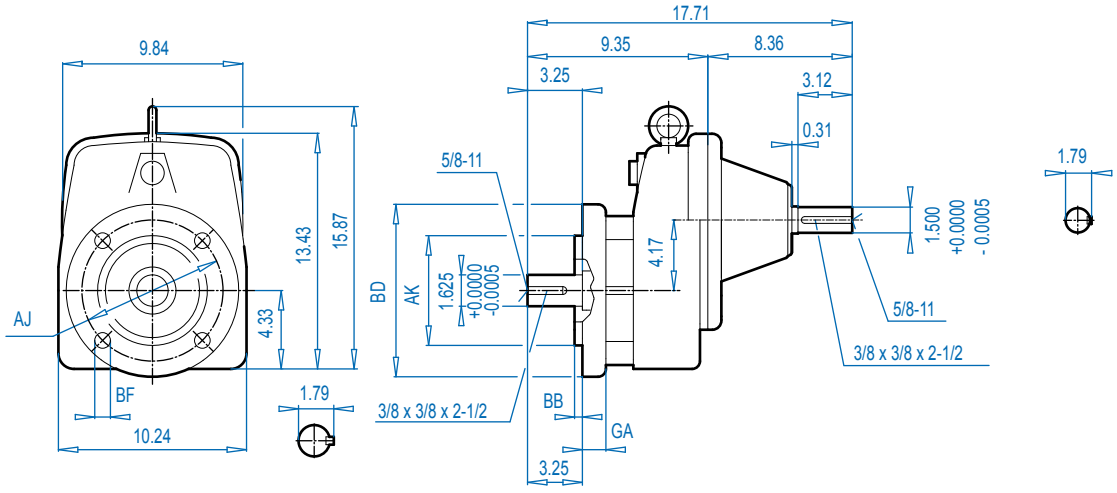

Mounting Flange

BD (mm)	AJ	AK	BB	BF	GA
9.84 (250)	8.46	7.087 $^{+0.0005}_{-0.0004}$	0.16	0.55	0.63
11.81 (300)	10.43	9.055 $^{+0.0006}_{-0.0005}$	0.16	0.55	0.79

ALTERNATE SHAFTS SEE PAGE 239

Send Quote Requests to info@automatedpt.com
Call +1(800)985-6929 To Order or Order Online At Nordgearmotors.com

Send Quote Requests to info@automatedpt.com
Call +1(800)985-6929 To Order or Order Online At Nordgearmotors.com

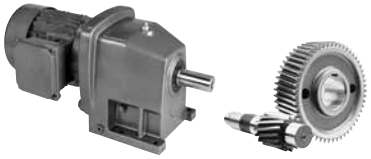

SK 02 + Motor
SK 02F + Motor

SK 02

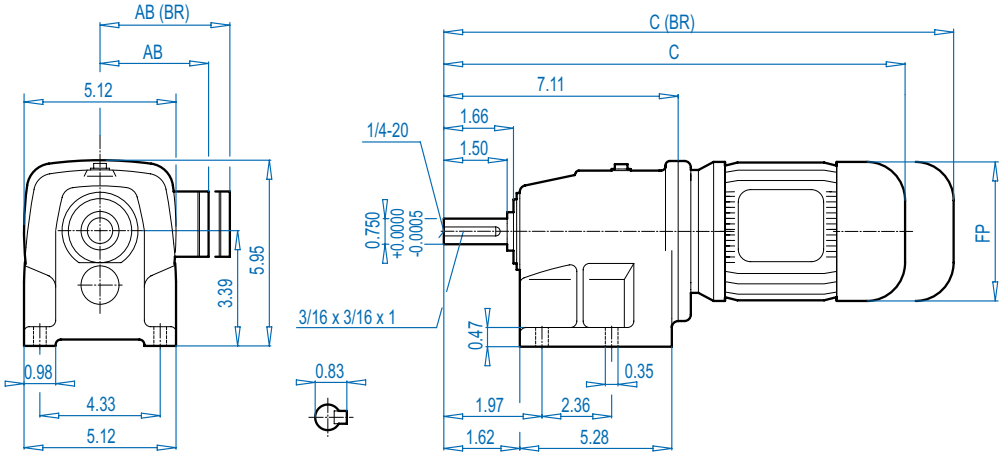

SK 02F

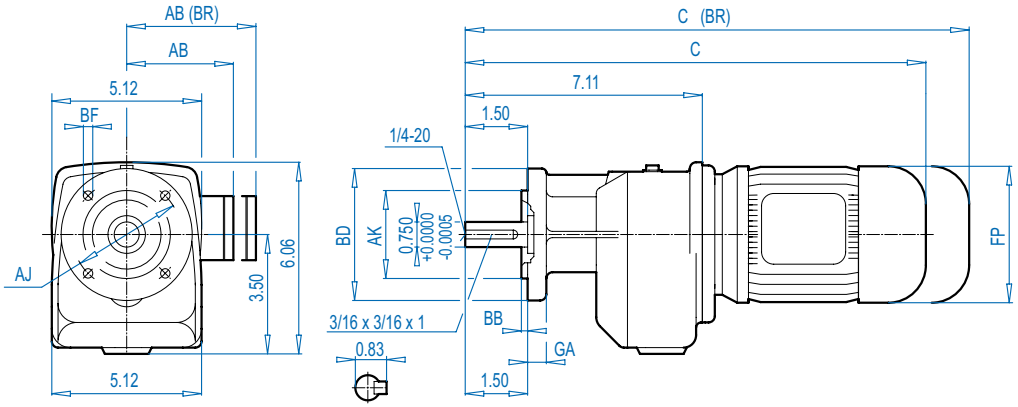

ALTERNATE SHAFTS SEE PAGE 239

Mounting Flange

BD (mm)	AJ	AK	BB	BF	GA
4.72 (120)	3.94	3.150 $^{+0.0005}_{-0.0003}$	0.12	0.28	0.39
5.51 (140)	4.53	3.740 $^{+0.0005}_{-0.0004}$	0.12	0.35	0.39
6.30 (160)	5.12	4.331 $^{+0.0005}_{-0.0004}$	0.14	0.35	0.39

Motor Dimensions

Standard efficiency	63S/L	71S/L	80S/L	90S/L			For Other Connection Possibilities please see ⇨🕮 236
Energy efficiency			80LH	90SH/LH			
AB	4.53	4.88	5.59	5.79			
AB (BR)	4.84	5.24	5.63	5.83			
C	14.77	16.34	17.33	18.94			
C (BR)	16.97	18.63	19.85	21.90			
FP	4.84	5.43	6.14	6.92			

(BR) denotes Brakemotor

Send Quote Requests to info@automatedpt.com
Call +1(800)985-6929 To Order or Order Online At Nordgearmotors.com

SK 02 + NEMA
SK 02F + NEMA

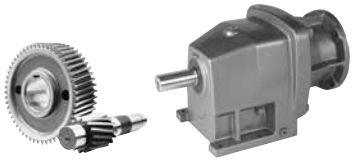

DRIVESYSTEMS

SK 02 + NEMA

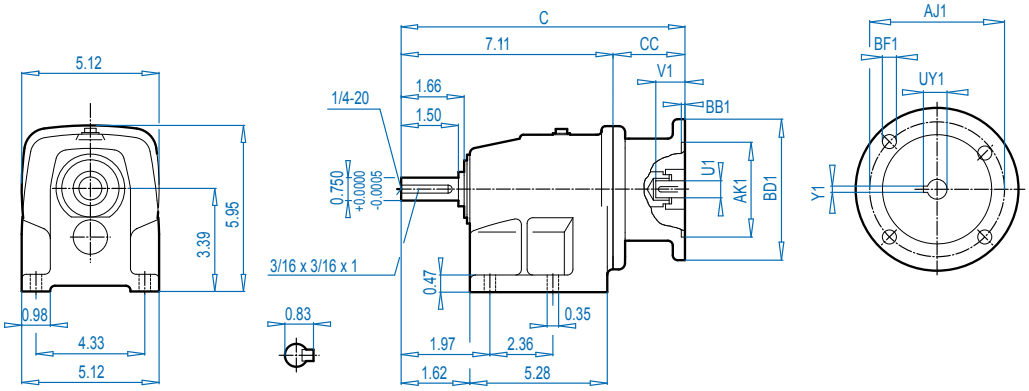

SK 02F + NEMA

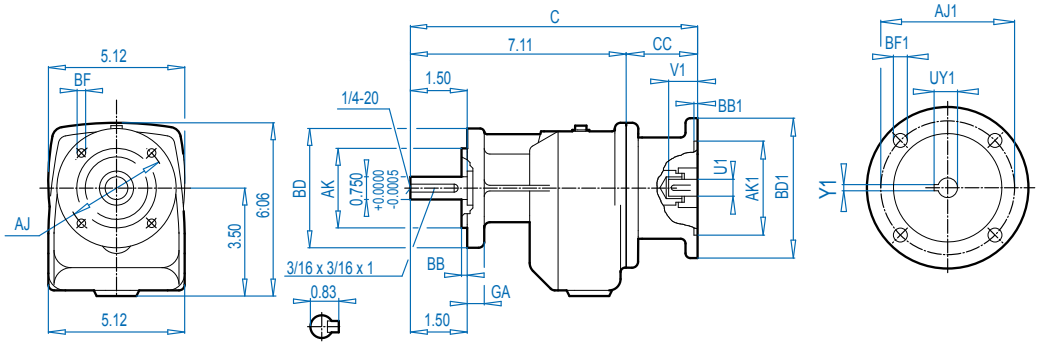

ALTERNATE SHAFTS SEE PAGE 239

Mounting Flange

BD (mm)	AJ	AK	BB	BF	GA
4.72 (120)	3.94	3.150 $^{+0.0005}_{-0.0003}$	0.12	0.28	0.39
5.51 (140)	4.53	3.740 $^{+0.0005}_{-0.0004}$	0.12	0.35	0.39
6.30 (160)	5.12	4.331 $^{+0.0005}_{-0.0004}$	0.14	0.35	0.39

NEMA Dimensions

Type	AJ1	AK1	BB1	BD1	BF1	U1	V1	UY1	Y1	C	CC
56C	5.88	4.500	0.18	6.54	0.43	0.625	2.06	0.71	0.188	11.56	4.45
140TC	5.88	4.500	0.18	6.54	0.43	0.875	2.12	0.96	0.188	11.56	4.45

Send Quote Requests to info@automatedpt.com
Call +1(800)985-6929 To Order or Order Online At Nordgearmotors.com

DRIVESYSTEMS

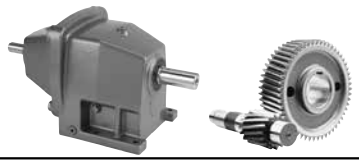

SK 02 - W
SK 02F - W

SK 02 + W

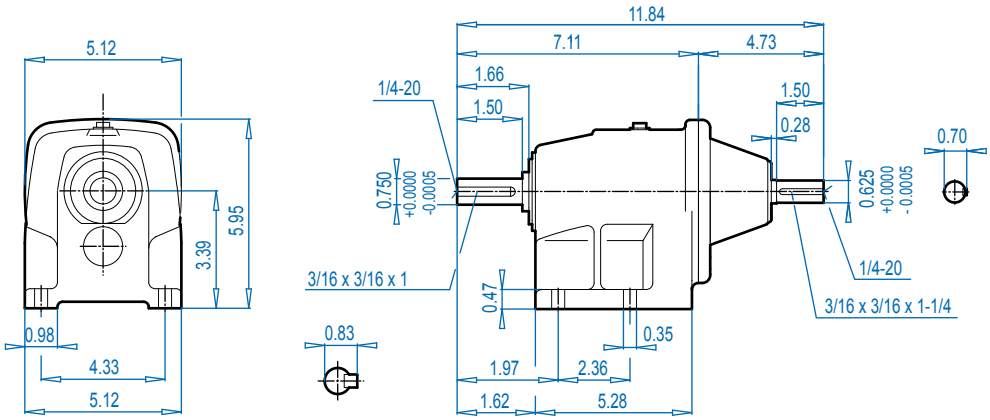

SK 02F + W

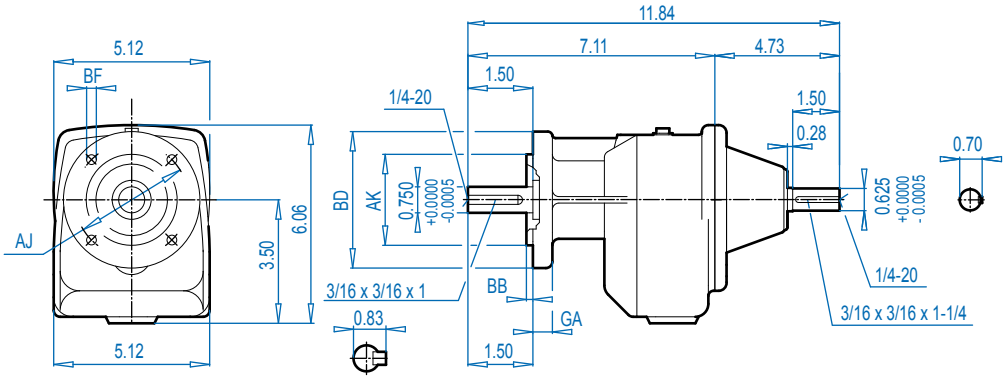

Mounting Flange

BD (mm)	AJ	AK	BB	BF	GA
4.72 (120)	3.94	3.150 $^{+0.0005}_{-0.0003}$	0.12	0.28	0.39
5.51 (140)	4.53	3.740 $^{+0.0005}_{-0.0004}$	0.12	0.35	0.39
6.30 (160)	5.12	4.331 $^{+0.0005}_{-0.0004}$	0.14	0.35	0.39

ALTERNATE SHAFTS SEE PAGE 239

Send Quote Requests to info@automatedpt.com
Call +1(800)985-6929 To Order or Order Online At Nordgearmotors.com

SK 03 + Motor
SK 03F + Motor

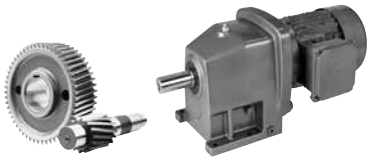

DRIVESYSTEMS

SK 03

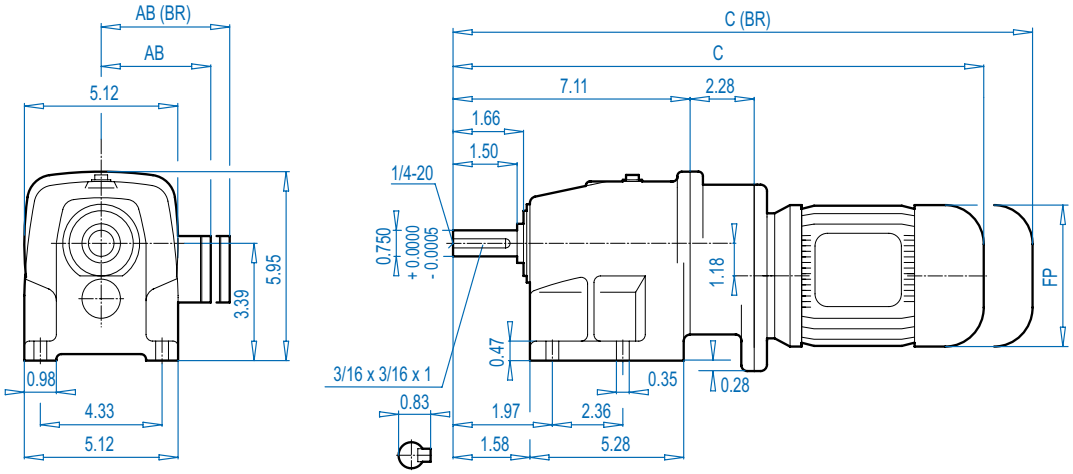

SK 03F

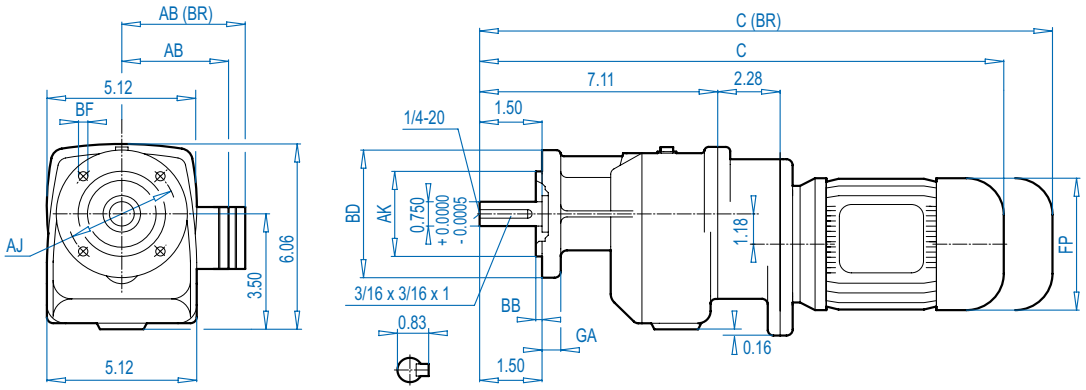

ALTERNATE SHAFTS SEE PAGE 239

Mounting Flange

BD (mm)	AJ	AK	BB	BF	GA
4.72 (120)	3.94	3.150 $^{+0.0005}_{-0.0003}$	0.12	0.28	0.39
5.51 (140)	4.53	3.740 $^{+0.0005}_{-0.0004}$	0.12	0.35	0.39
6.30 (160)	5.12	4.331 $^{+0.0005}_{-0.0004}$	0.14	0.35	0.39

Motor Dimensions

Standard efficiency	63S/L	71S/L					For Other Connection Possibilities please see ⇨🕮 236
Energy efficiency							
AB	4.53	4.88					
AB (BR)	4.84	5.24					
C	16.97	18.55					
C (BR)	19.18	20.83					
FP	4.84	5.43					

(BR) denotes Brakemotor

Send Quote Requests to info@automatedpt.com
Call +1(800)985-6929 To Order or Order Online At Nordgearmotors.com

DRIVESYSTEMS

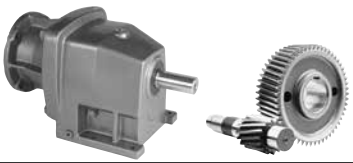

SK 03 + NEMA
SK 03F + NEMA

SK 03

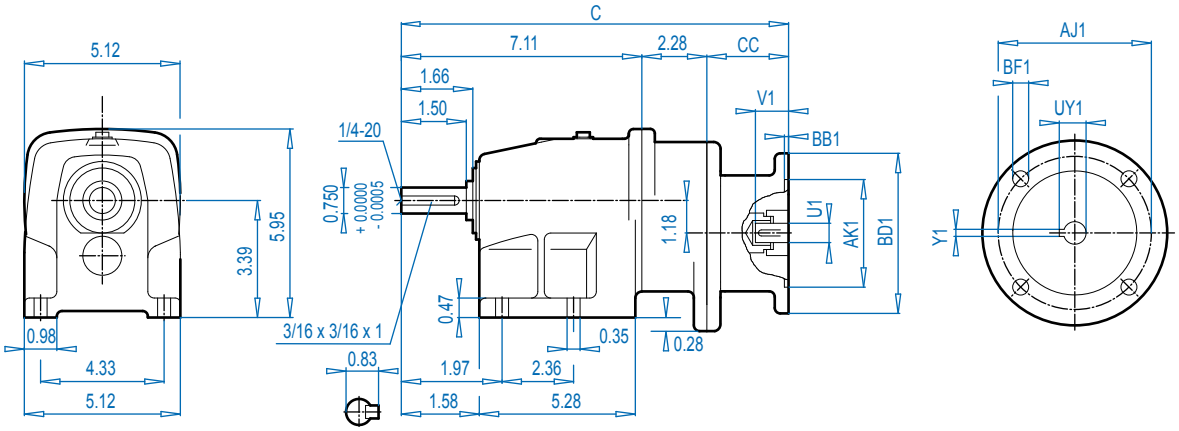

SK 03F

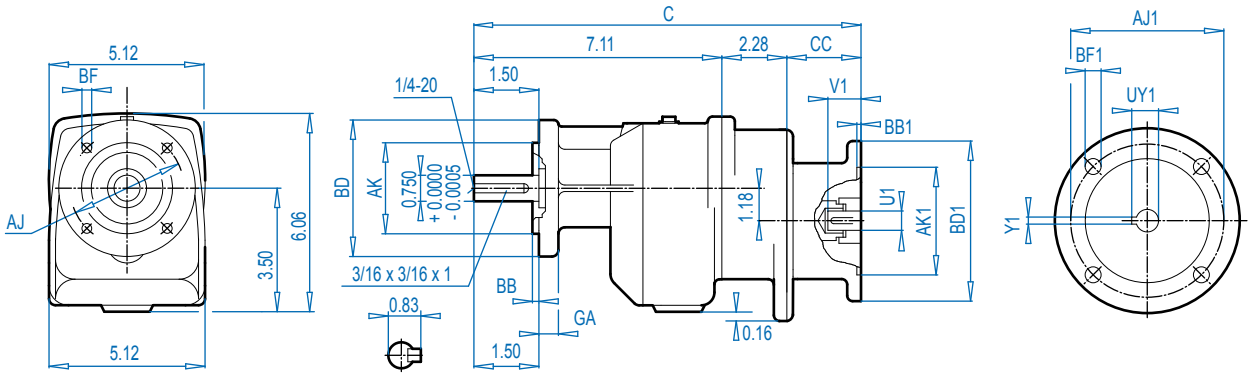

ALTERNATE SHAFTS SEE PAGE 239

Mounting Flange

BD (mm)	AJ	AK	BB	BF	GA
4.72 (120)	3.94	3.150 $^{+0.0005}_{-0.0003}$	0.12	0.28	0.39
5.51 (140)	4.53	3.740 $^{+0.0005}_{-0.0004}$	0.12	0.35	0.39
6.30 (160)	5.12	4.331 $^{+0.0005}_{-0.0004}$	0.14	0.35	0.39

NEMA Dimensions

Type	AJ1	AK1	BB1	BD1	BF1	U1	V1	UY1	Y1	C	CC
56C	5.88	4.500	0.18	6.54	0.43	0.625	2.06	0.71	0.188	13.74	4.45
140TC	5.88	4.500	0.18	6.54	0.43	0.875	2.12	0.96	0.188	13.74	4.45

Send Quote Requests to info@automatedpt.com
Call +1(800)985-6929 To Order or Order Online At Nordgearmotors.com

SK 03 - W
SK 03F - W

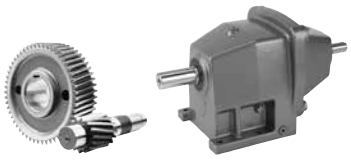

DRIVESYSTEMS

SK 03

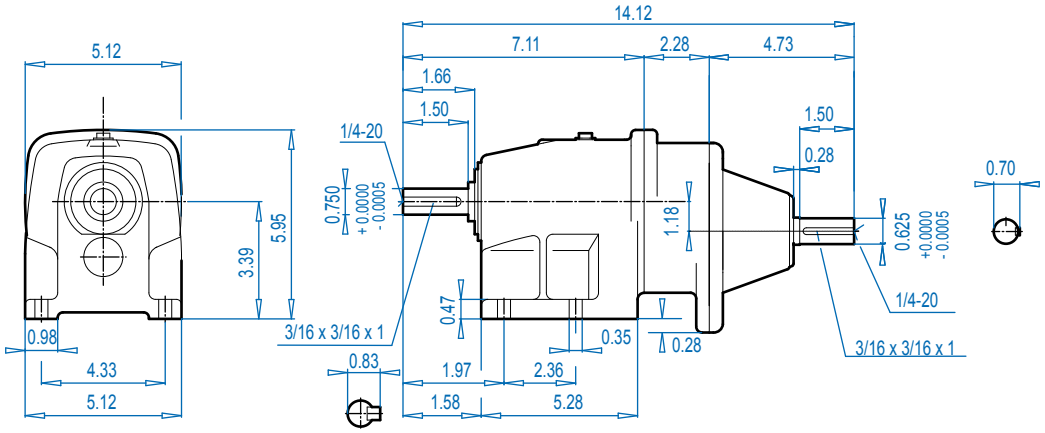

SK 03F

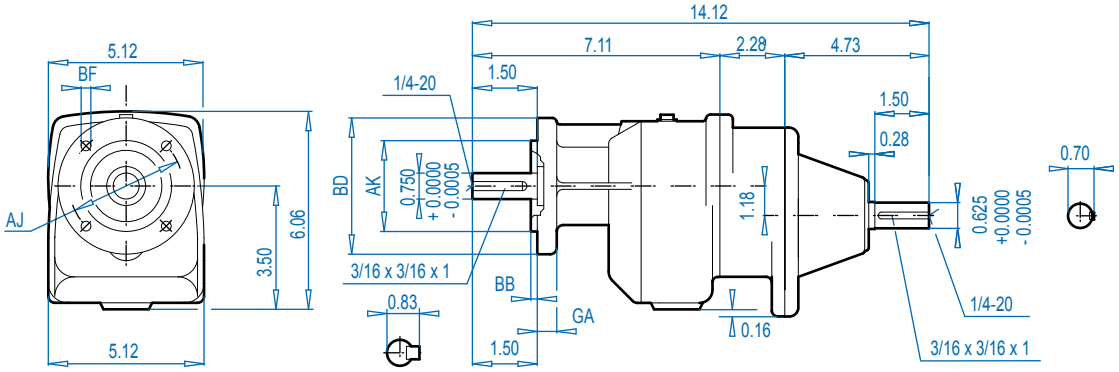

Mounting Flange

BD (mm)	AJ	AK	BB	BF	GA
4.72 (120)	3.94	3.150 $^{+0.0005}_{-0.0003}$	0.12	0.28	0.39
5.51 (140)	4.53	3.740 $^{+0.0005}_{-0.0004}$	0.12	0.35	0.39
6.30 (160)	5.12	4.331 $^{+0.0005}_{-0.0004}$	0.14	0.35	0.39

ALTERNATE SHAFTS SEE PAGE 239

Send Quote Requests to info@automatedpt.com
Call +1(800)985-6929 To Order or Order Online At Nordgearmotors.com

DRIVESYSTEMS

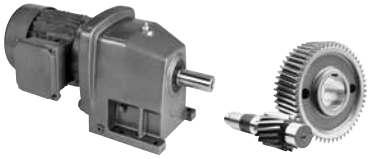

SK 12 + Motor
SK 12F + Motor

SK 12

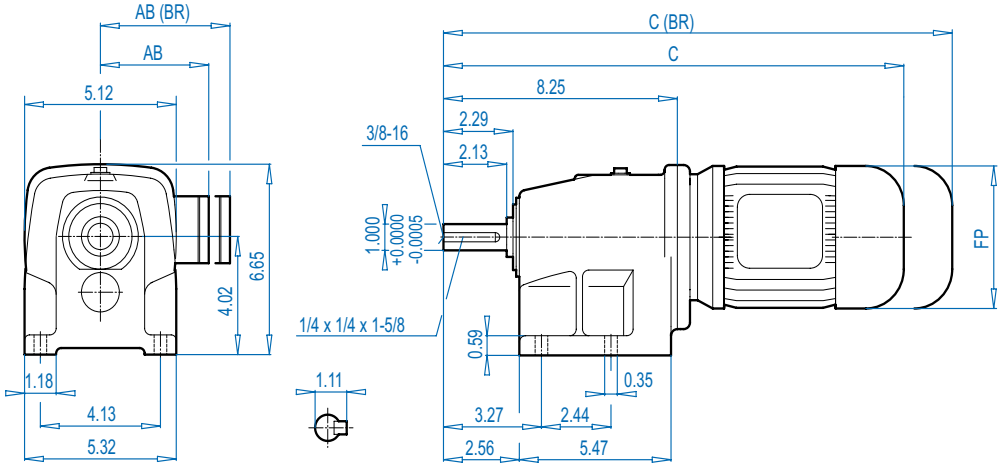

SK 12F

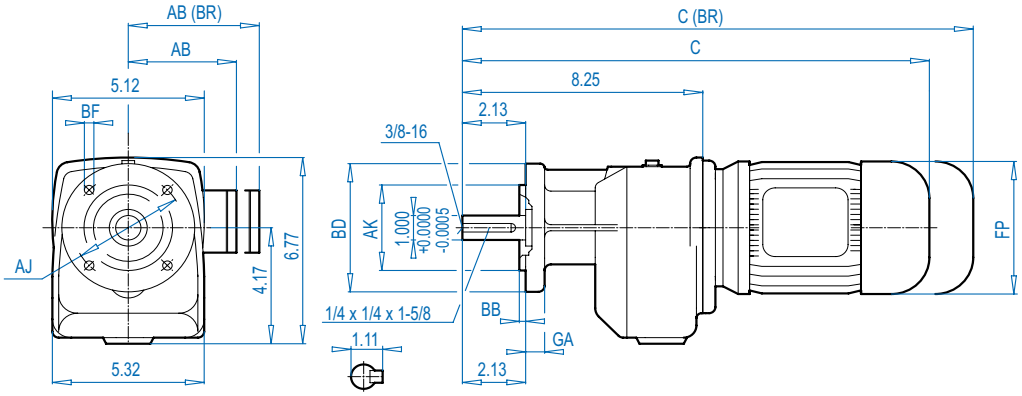

Mounting Flange

BD (mm)	AJ	AK	BB	BF	GA
4.72 (120)	3.94	3.150 $^{+0.0005}_{-0.0003}$	0.12	0.28	0.39
5.51 (140)	4.53	3.740 $^{+0.0005}_{-0.0004}$	0.12	0.35	0.39
6.30 (160)	5.12	4.331 $^{+0.0005}_{-0.0004}$	0.14	0.35	0.39

Motor Dimensions

Standard efficiency	63S/L	71S/L	80S/L	90S/L	100L	112M		For Other Connection Possibilities please see ⇨🕮 236
Energy efficiency			80LH	90SH/LH	100LH		112MH	
AB	4.53	4.88	5.59	5.79	6.65	7.05	7.05	
AB (BR)	4.84	5.24	5.63	5.83	6.26	6.69	6.69	
C	15.90	17.48	18.46	20.08	21.26	22.16	23.13	
C (BR)	18.11	19.76	20.98	23.03	24.84	25.82	26.79	
FP	4.84	5.43	6.14	6.92	7.63	8.58	8.58	



(BR) denotes Brakemotor

ALTERNATE SHAFTS SEE PAGE 239

Send Quote Requests to info@automatedpt.com
Call +1(800)985-6929 To Order or Order Online At Nordgearmotors.com

Send Quote Requests to info@automatedpt.com
Call +1(800)985-6929 To Order or Order Online At Nordgearmotors.com

SK 12 + NEMA
SK 12F + NEMA

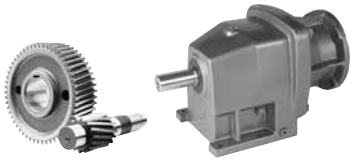

SK 12

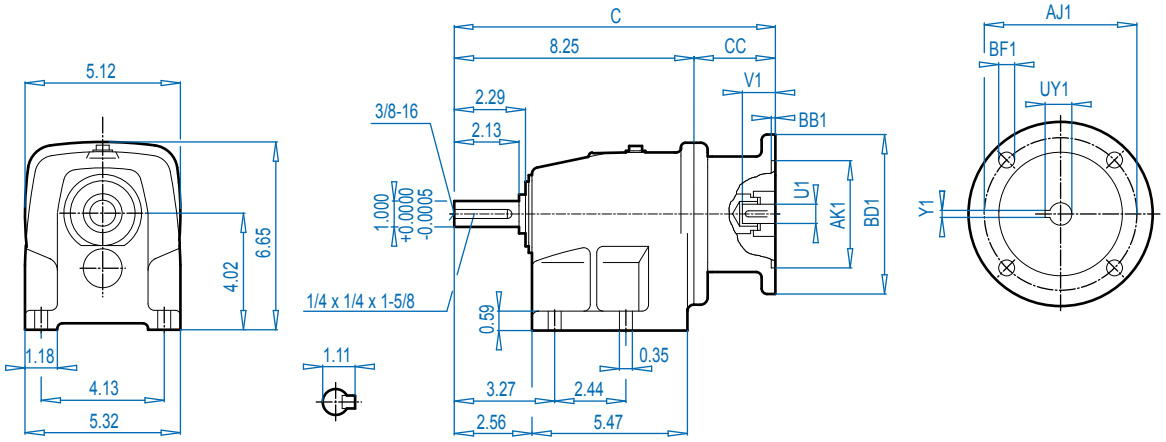

SK 12F

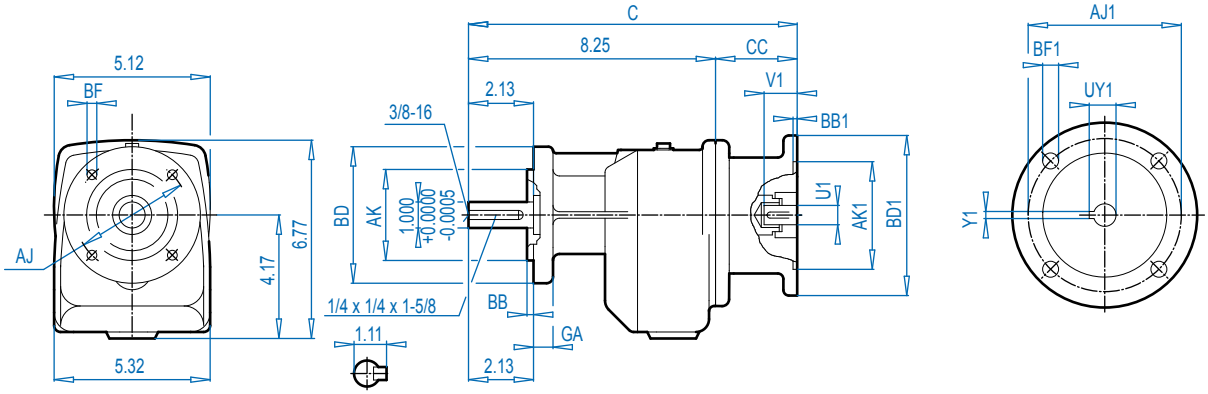

ALTERNATE SHAFTS SEE PAGE 239

Mounting Flange

BD (mm)	AJ	AK	BB	BF	GA
4.72 (120)	3.94	3.150 $^{+0.0005}_{-0.0003}$	0.12	0.28	0.39
5.51 (140)	4.53	3.740 $^{+0.0005}_{-0.0004}$	0.12	0.35	0.39
6.30 (160)	5.12	4.331 $^{+0.0005}_{-0.0004}$	0.14	0.35	0.39

NEMA Dimensions

Type	AJ1	AK1	BB1	BD1	BF1	U1	V1	UY1	Y1	C	CC
56C	5.88	4.500	0.18	6.54	0.43	0.625	2.06	0.71	0.188	12.70	4.45
140TC	5.88	4.500	0.18	6.54	0.43	0.875	2.12	0.96	0.188	12.70	4.45
180TC	7.25	8.500	0.23	9.17	0.59	1.125	2.62	1.24	0.250	13.90	5.65

Send Quote Requests to info@automatedpt.com
Call +1(800)985-6929 To Order or Order Online At Nordgearmotors.com

DRIVESYSTEMS

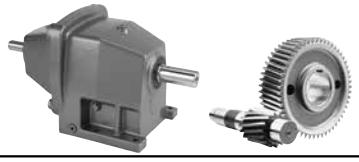

SK 12 - W
SK 12F - W

SK 12

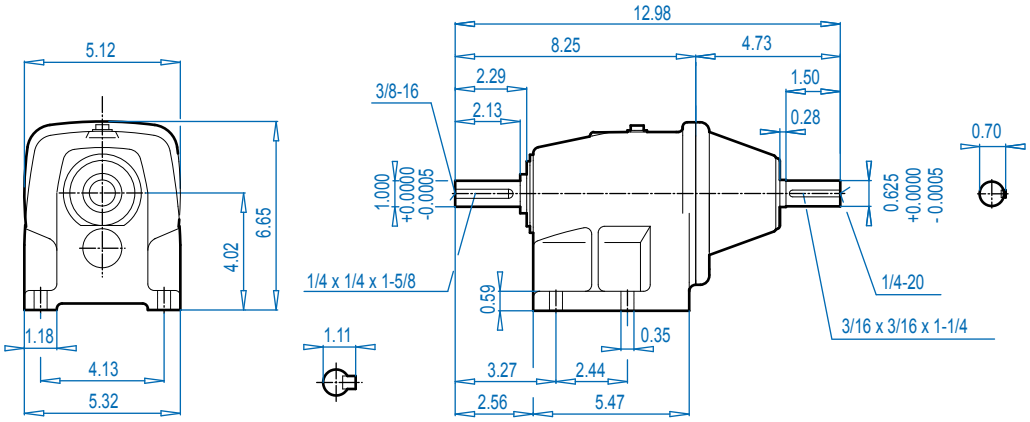

SK 12F

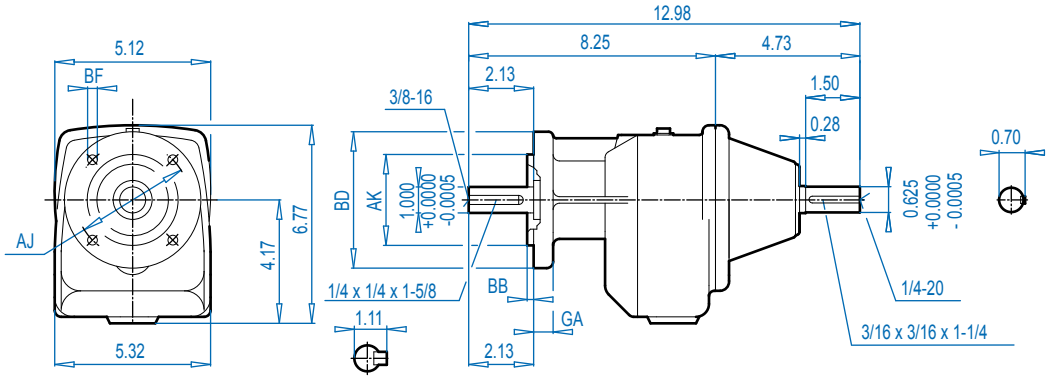

ALTERNATE SHAFTS SEE PAGE 239

Mounting Flange

BD (mm)	AJ	AK	BB	BF	GA
4.72 (120)	3.94	3.150 $^{+0.0005}_{-0.0003}$	0.12	0.28	0.39
5.51 (140)	4.53	3.740 $^{+0.0005}_{-0.0004}$	0.12	0.35	0.39
6.30 (160)	5.12	4.331 $^{+0.0005}_{-0.0004}$	0.14	0.35	0.39

Send Quote Requests to info@automatedpt.com
Call +1(800)985-6929 To Order or Order Online At Nordgearmotors.com

SK 13 + Motor
SK 13F + Motor

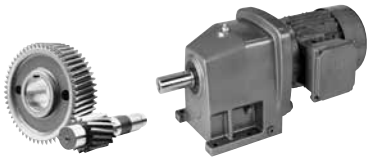

DRIVESYSTEMS

SK 13

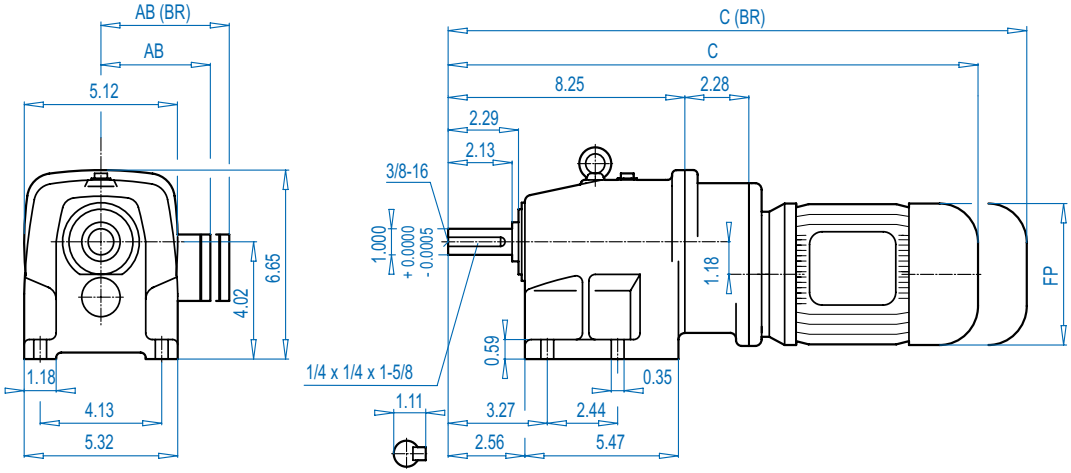

SK 13F

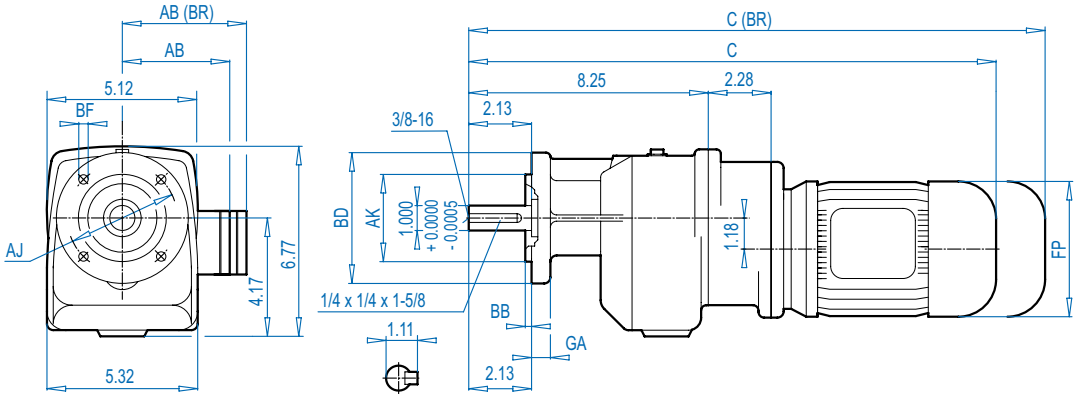

ALTERNATE SHAFTS SEE PAGE 239

Mounting Flange

BD (mm)	AJ	AK	BB	BF	GA
4.72 (120)	3.94	3.150 $^{+0.0005}_{-0.0003}$	0.12	0.28	0.39
5.51 (140)	4.53	3.740 $^{+0.0005}_{-0.0004}$	0.12	0.35	0.39
6.30 (160)	5.12	4.331 $^{+0.0005}_{-0.0004}$	0.14	0.35	0.39

Motor Dimensions

Standard efficiency	63S/L	71S/L					For Other Connection Possibilities please see ⇨📖 236
Energy efficiency							
AB	4.53	4.88					
AB (BR)	4.84	5.24					
C	18.19	19.76					
C (BR)	20.39	22.04					
FP	4.84	5.43					

(BR) denotes Brakemotor

Send Quote Requests to info@automatedpt.com
Call +1(800)985-6929 To Order or Order Online At Nordgearmotors.com

DRIVESYSTEMS

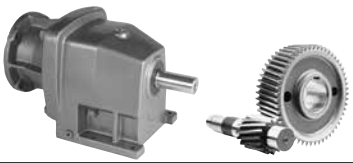

SK 13 + NEMA
SK 13F + NEMA

SK 13

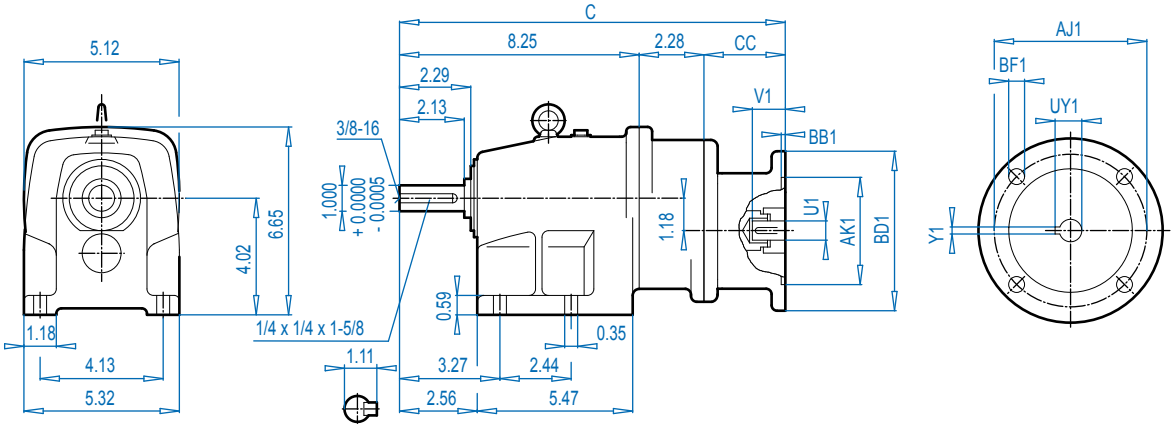

SK 13F

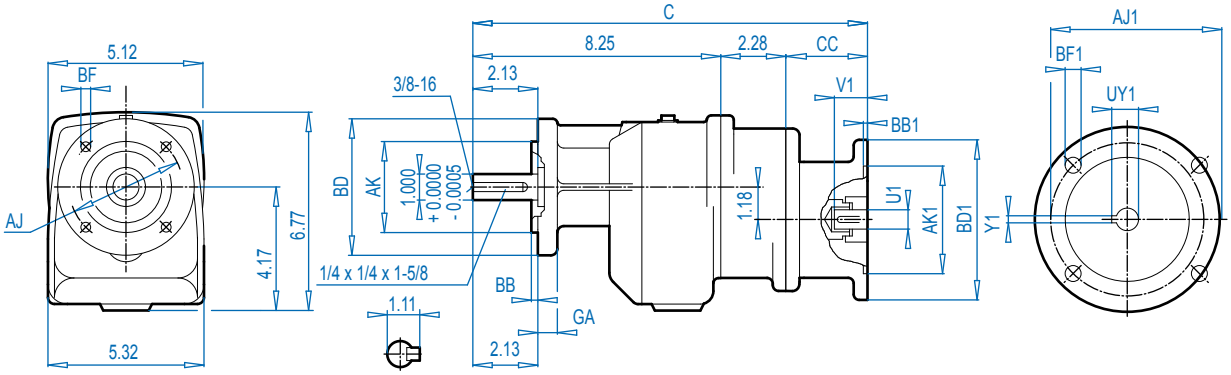

ALTERNATE SHAFTS SEE PAGE 239

Mounting Flange

BD (mm)	AJ	AK	BB	BF	GA
4.72 (120)	3.94	3.150 $^{+0.0005}_{-0.0003}$	0.12	0.28	0.39
5.51 (140)	4.53	3.740 $^{+0.0005}_{-0.0004}$	0.12	0.35	0.39
6.30 (160)	5.12	4.331 $^{+0.0005}_{-0.0004}$	0.14	0.35	0.39

NEMA Dimensions

Type	AJ1	AK1	BB1	BD1	BF1	U1	V1	UY1	Y1	C	CC
56C	5.88	4.500	0.18	6.54	0.43	0.625	2.06	0.71	0.188	14.98	4.45

Send Quote Requests to info@automatedpt.com
Call +1(800)985-6929 To Order or Order Online At Nordgearmotors.com

SK 13 - W
SK 13F - W

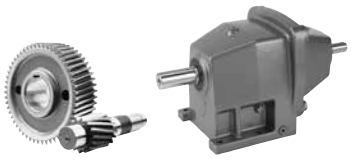

DRIVESYSTEMS

SK 13

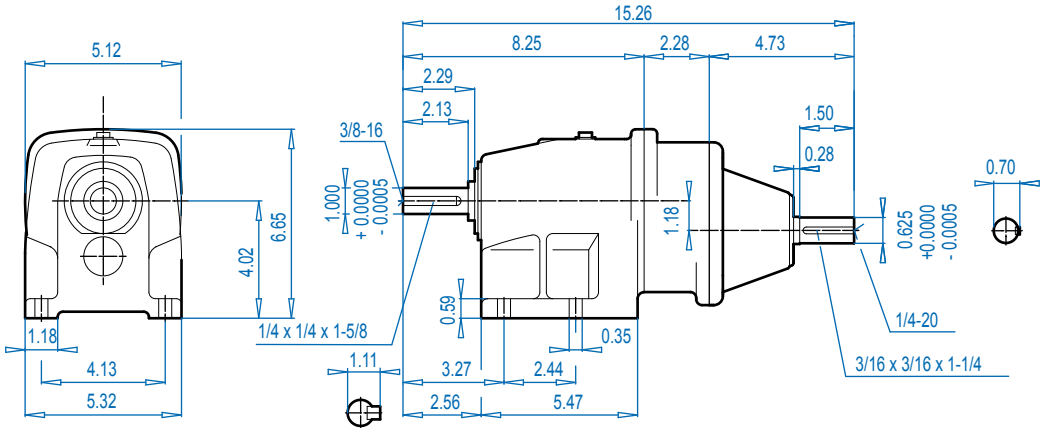

SK 13F

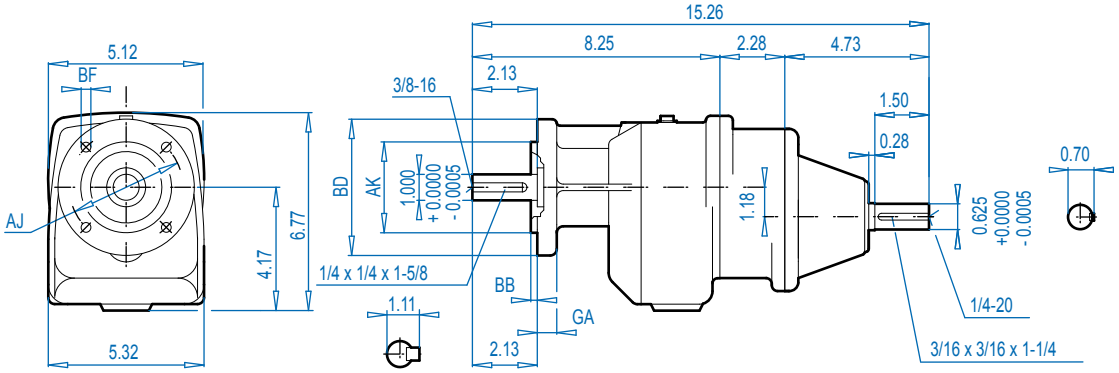

Mounting Flange

BD (mm)	AJ	AK	BB	BF	GA
4.72 (120)	3.94	3.150 $^{+0.0005}_{-0.0003}$	0.12	0.28	0.39
5.51 (140)	4.53	3.740 $^{+0.0005}_{-0.0004}$	0.12	0.35	0.39
6.30 (160)	5.12	4.331 $^{+0.0005}_{-0.0004}$	0.14	0.35	0.39

ALTERNATE SHAFTS SEE PAGE 239

Send Quote Requests to info@automatedpt.com
Call +1(800)985-6929 To Order or Order Online At Nordgearmotors.com

Send Quote Requests to info@automatedpt.com
Call +1(800)985-6929 To Order or Order Online At Nordgearmotors.com

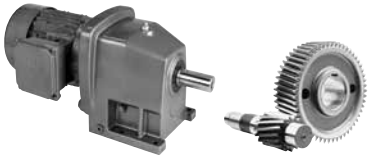

SK 22 + Motor
SK 22F + Motor

SK 22

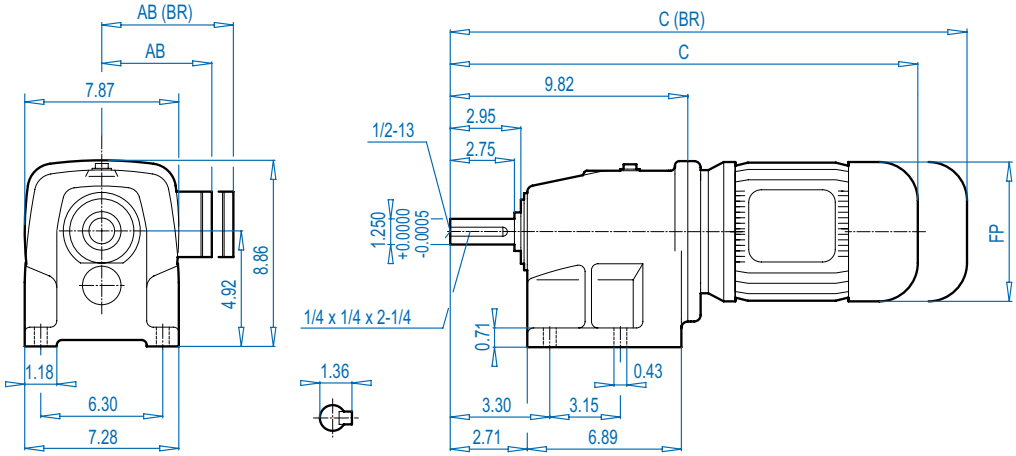

SK 22F

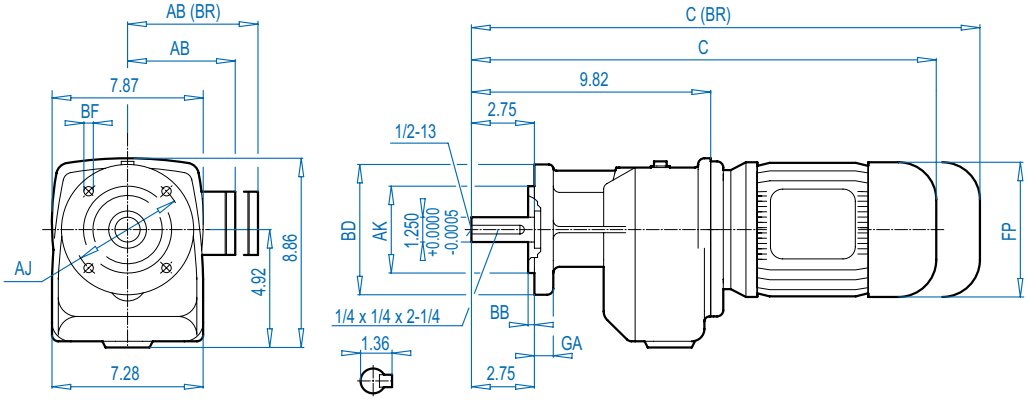

ALTERNATE SHAFTS SEE PAGE 239

Mounting Flange

BD (mm)	AJ	AK	BB	BF	GA
6.30 (160)	5.12	4.331 $^{+0.0005}_{-0.0004}$	0.14	0.35	0.39
7.87 (200)	6.50	5.118 $^{+0.0005}_{-0.0004}$	0.14	0.43	0.47

Motor Dimensions

Standard efficiency	71S/L	80S/L	90S/L	100L	112M		For Other Connection Possibilities please see ⇨📖 236
Energy efficiency		80LH	90SH/LH	100LH		112MH	
AB	4.88	5.59	5.79	6.65	7.05	**7.05**	
AB (BR)	5.24	5.63	5.83	6.26	6.69	**6.69**	
C	18.86	19.84	21.45	22.64	23.54	**24.51**	
C (BR)	21.14	22.36	24.41	26.22	27.20	**28.17**	
FP	5.43	6.14	6.92	7.63	8.58	**8.58**	

(BR) denotes Brakemotor

Send Quote Requests to info@automatedpt.com
Call +1(800)985-6929 To Order or Order Online At Nordgearmotors.com

SK 22 + NEMA
SK 22F + NEMA

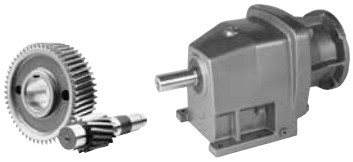

DRIVESYSTEMS

SK 22

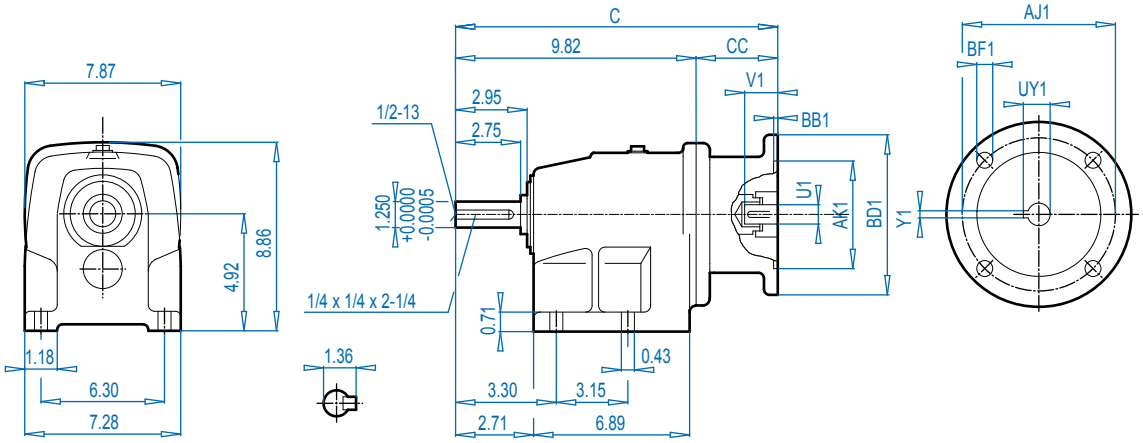

SK 22F

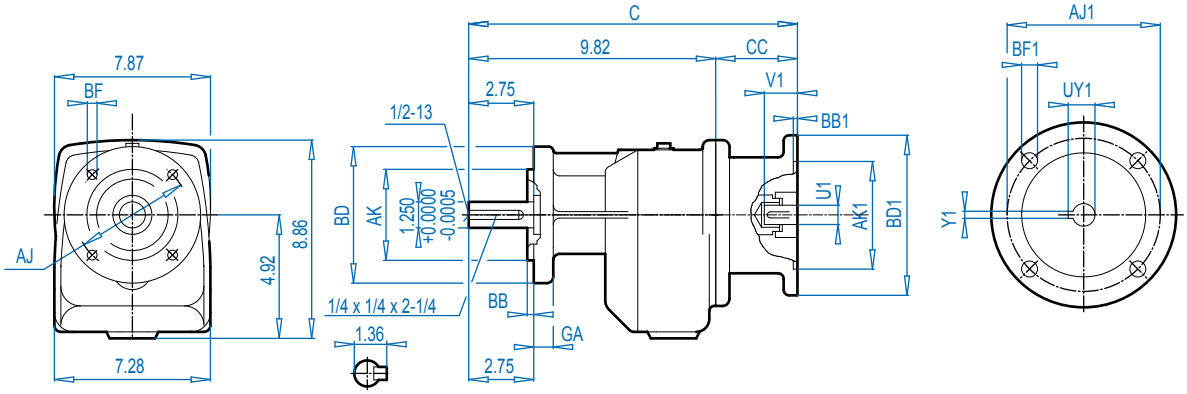

ALTERNATE SHAFTS SEE PAGE 239

Mounting Flange

BD (mm)	AJ	AK	BB	BF	GA
6.30 (160)	5.12	4.331 $^{+0.0005}_{-0.0004}$	0.14	0.35	0.39
7.87 (200)	6.50	5.118 $^{+0.0005}_{-0.0004}$	0.14	0.43	0.47

NEMA Dimensions

Type	AJ1	AK1	BB1	BD1	BF1	U1	V1	UY1	Y1	C	CC
56C	5.88	4.500	0.18	6.54	0.43	0.625	2.06	0.71	0.188	14.42	4.61
140TC	5.88	4.500	0.18	6.54	0.43	0.875	2.12	0.96	0.188	14.42	4.61
180TC	7.25	8.500	0.23	9.17	0.59	1.125	2.62	1.24	0.250	15.33	5.51

Send Quote Requests to info@automatedpt.com
Call +1(800)985-6929 To Order or Order Online At Nordgearmotors.com

DRIVESYSTEMS

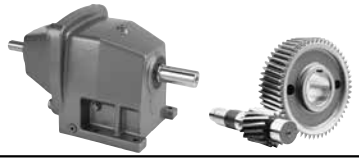

SK 22 - W
SK 22F - W

SK 22

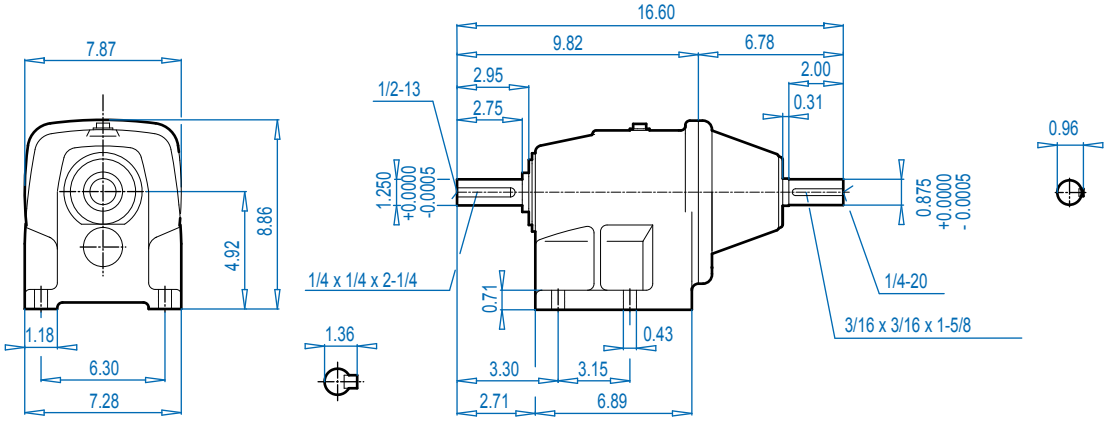

SK 22F

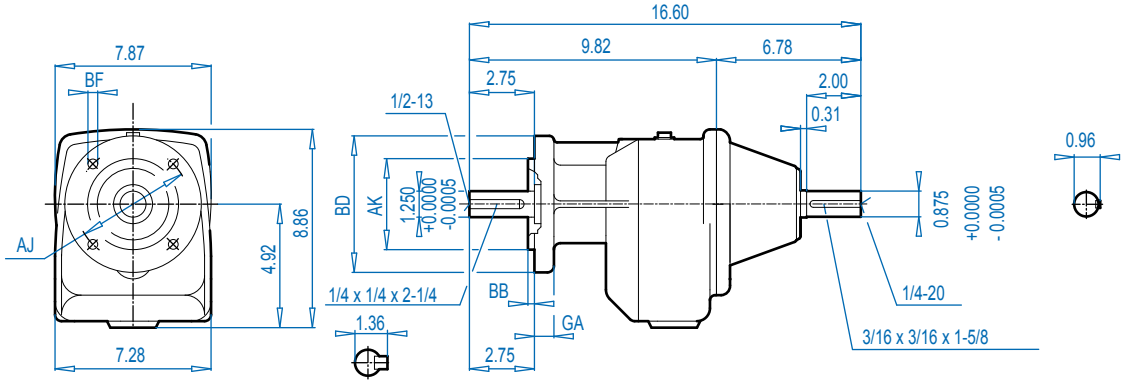

Mounting Flange

BD (mm)	AJ	AK	BB	BF	GA
6.30 (160)	5.12	4.331 $^{+0.0005}_{-0.0004}$	0.14	0.35	0.39
7.87 (200)	6.50	5.118 $^{+0.0005}_{-0.0004}$	0.14	0.43	0.47

ALTERNATE SHAFTS SEE PAGE 239

Send Quote Requests to info@automatedpt.com
Call +1(800)985-6929 To Order or Order Online At Nordgearmotors.com

SK 23 + Motor
SK 23F + Motor

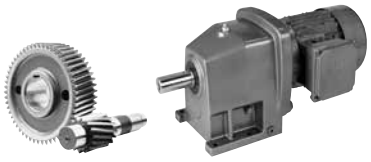

DRIVESYSTEMS

SK 23

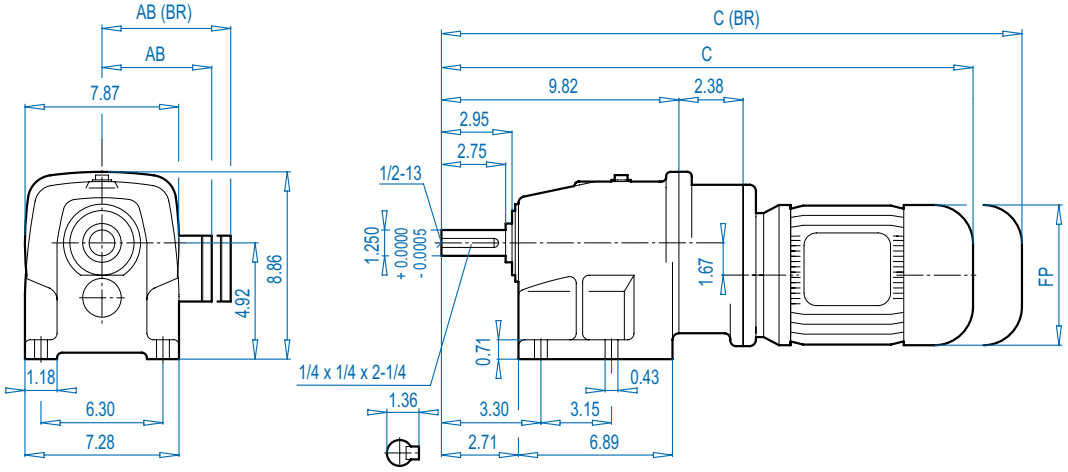

SK 23F

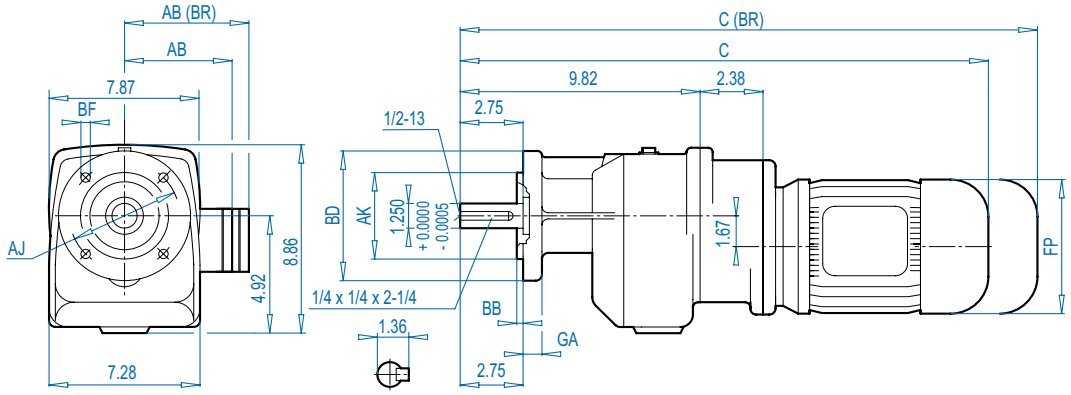

ALTERNATE SHAFTS SEE PAGE 239

Mounting Flange

BD (mm)	AJ	AK	BB	BF	GA
6.30 (160)	5.12	4.331 $^{+0.0005}_{-0.0004}$	0.14	0.35	0.39
7.87 (200)	6.50	5.118 $^{+0.0005}_{-0.0004}$	0.14	0.43	0.47

Motor Dimensions

Standard efficiency	63S/L	71S/L	80S/L				For Other Connection Possibilities please see ⇨🕮 236
Energy efficiency			80LH				
AB	4.53	4.88	5.59				
AB (BR)	4.84	5.24	5.63				
C	19.88	21.45	22.44				
C (BR)	22.08	23.74	24.96				
FP	4.84	5.43	6.14				

(BR) denotes Brakemotor

Send Quote Requests to info@automatedpt.com
Call +1(800)985-6929 To Order or Order Online At Nordgearmotors.com

DRIVESYSTEMS

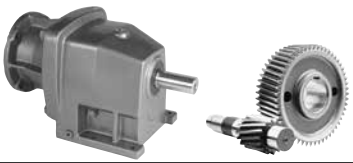

SK 23 + NEMA
SK 23F + NEMA

SK 23

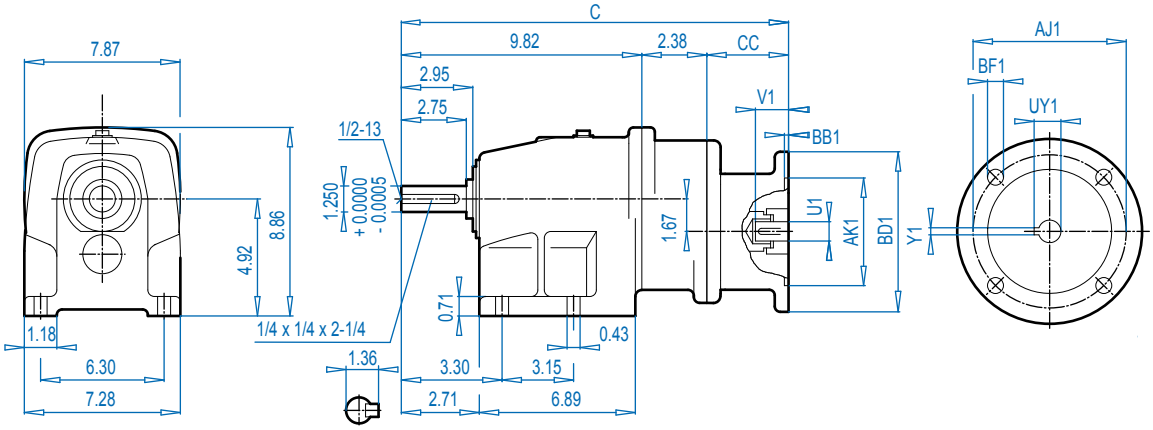

SK 23F

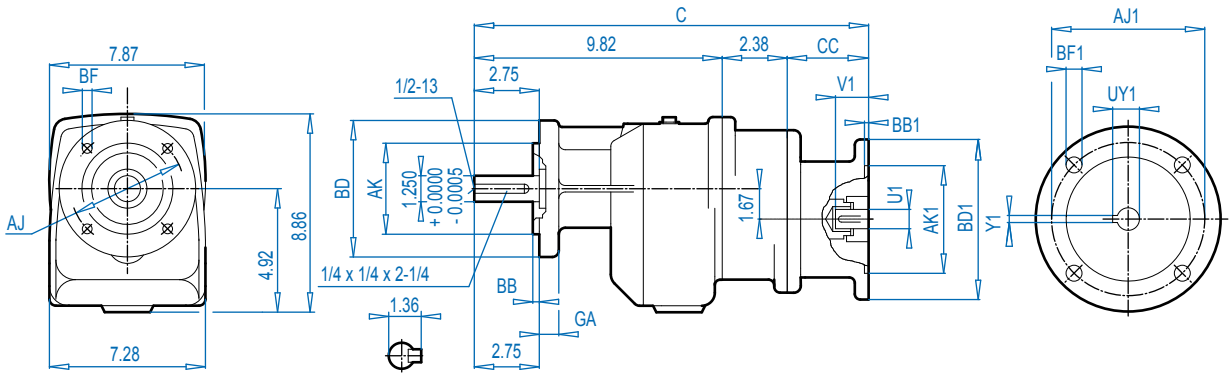

ALTERNATE SHAFTS SEE PAGE 239

Mounting Flange

BD (mm)	AJ	AK	BB	BF	GA
6.30 (160)	5.12	4.331 $^{+0.0005}_{-0.0004}$	0.14	0.35	0.39
7.87 (200)	6.50	5.118 $^{+0.0005}_{-0.0004}$	0.14	0.43	0.47

NEMA Dimensions

Type	AJ1	AK1	BB1	BD1	BF1	U1	V1	UY1	Y1	C	CC
56C	5.88	4.500	0.18	6.54	0.43	0.625	2.06	0.71	0.188	16.65	4.45
140TC	5.88	4.500	0.18	6.54	0.43	0.875	2.12	0.96	0.188	16.65	4.45

Send Quote Requests to info@automatedpt.com
Call +1(800)985-6929 To Order or Order Online At Nordgearmotors.com

Send Quote Requests to info@automatedpt.com
Call +1(800)985-6929 To Order or Order Online At Nordgearmotors.com

SK 23 - W
SK 23F - W

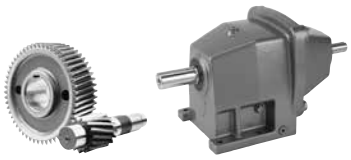

DRIVESYSTEMS

SK 23

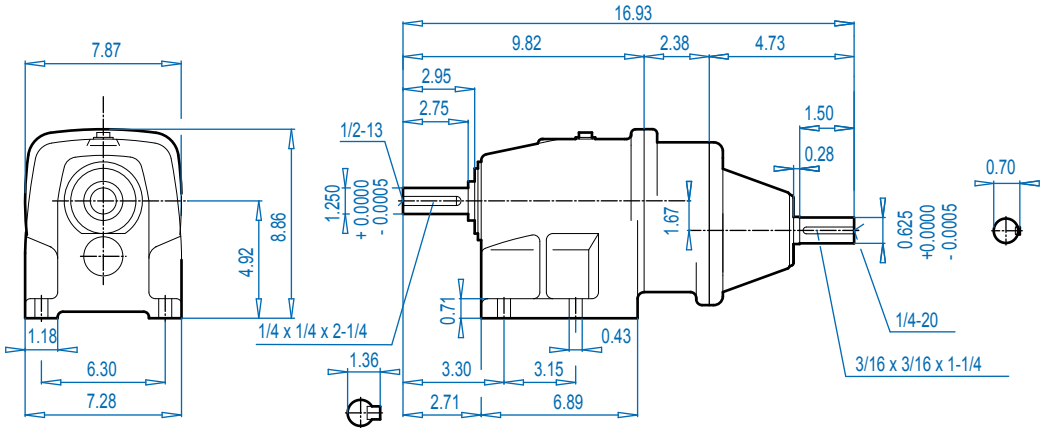

ALTERNATE SHAFTS SEE PAGE 239

SK 23F

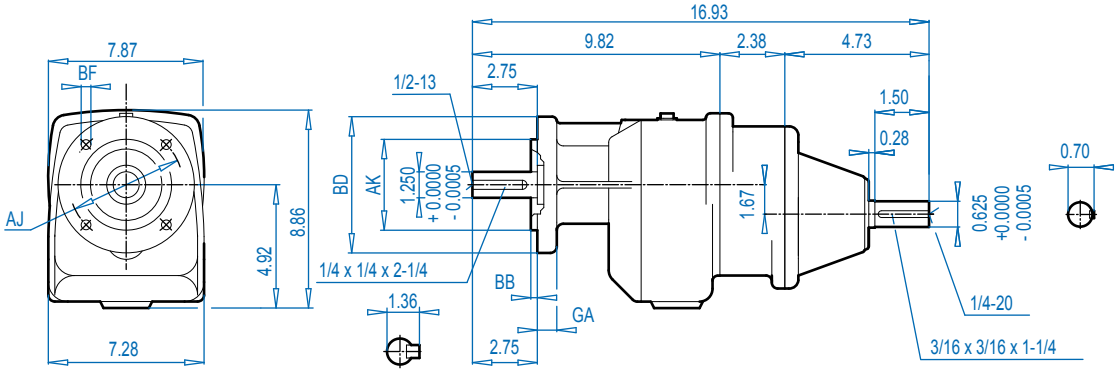

Mounting Flange

BD (mm)	AJ	AK	BB	BF	GA
6.30 (160)	5.12	4.331 $^{+0.0005}_{-0.0004}$	0.14	0.35	0.39
7.87 (200)	6.50	5.118 $^{+0.0005}_{-0.0004}$	0.14	0.43	0.47

Send Quote Requests to info@automatedpt.com
Call +1(800)985-6929 To Order or Order Online At Nordgearmotors.com

DRIVESYSTEMS

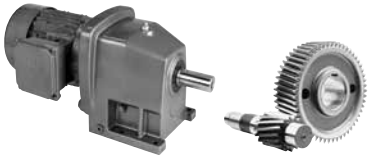

SK 32 + Motor
SK 32F + Motor

SK 32

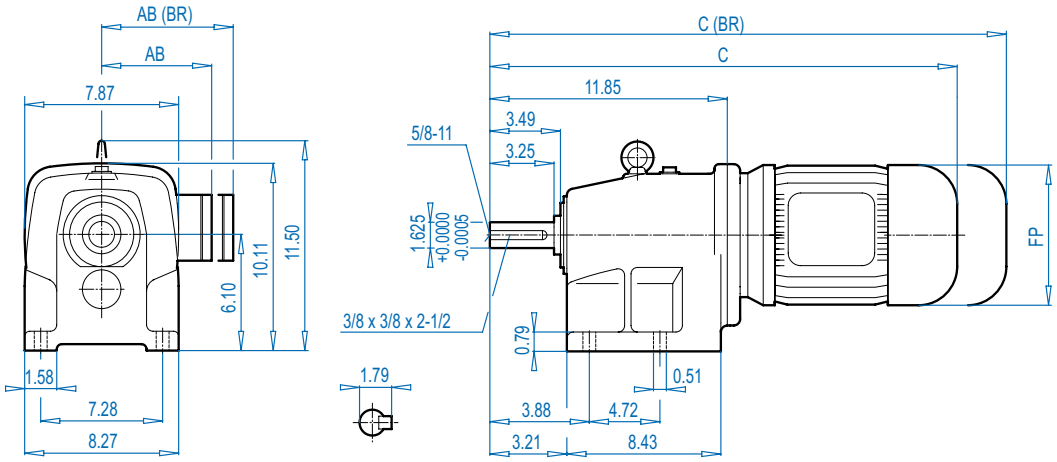

SK 32F

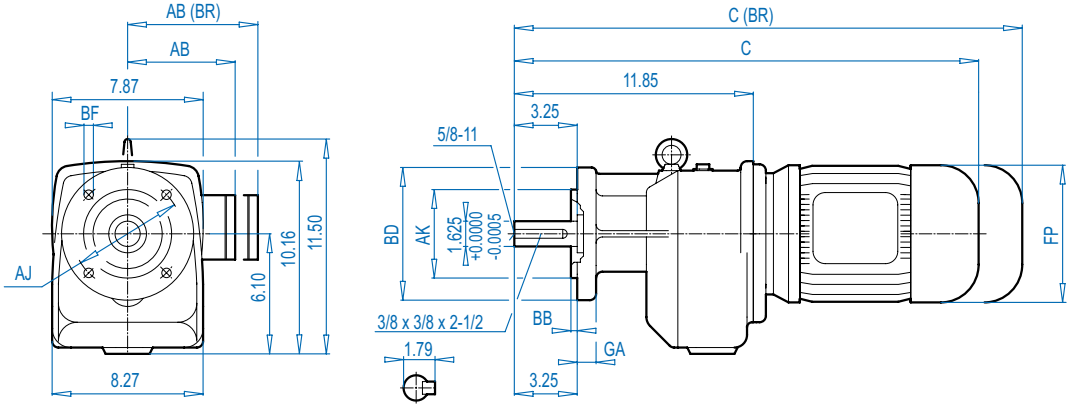

Mounting Flange

BD (mm)	AJ	AK	BB	BF	GA
7.87 (200)	6.50	5.118 $^{+0.0005}_{-0.0004}$	0.14	0.43	0.47
9.84 (250)	8.46	7.087 $^{+0.0005}_{-0.0004}$	0.16	0.55	0.63

Motor Dimensions

Standard efficiency	71S/L	80S/L	90S/L	100L	112M		132S/M	For Other Connection Possibilities please see ⇨🕮 236
Energy efficiency		80LH	90SH/LH	100LH		112MH	132SH/MH	
AB	4.88	5.59	5.79	6.65	7.05	7.05	8.03	
AB (BR)	5.24	5.63	5.83	6.26	6.69	6.69	7.72	
C	20.93	21.92	23.53	24.71	25.62	26.59	29.00	
C (BR)	23.21	24.43	26.48	28.29	29.28	30.25	33.21	
FP	5.59	6.14	6.92	7.63	8.58	8.58	10.16	

(BR) denotes Brakemotor

ALTERNATE SHAFTS SEE PAGE 239

Send Quote Requests to info@automatedpt.com
Call +1(800)985-6929 To Order or Order Online At Nordgearmotors.com

SK 32 + NEMA
SK 32F + NEMA

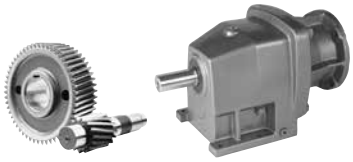

SK 32

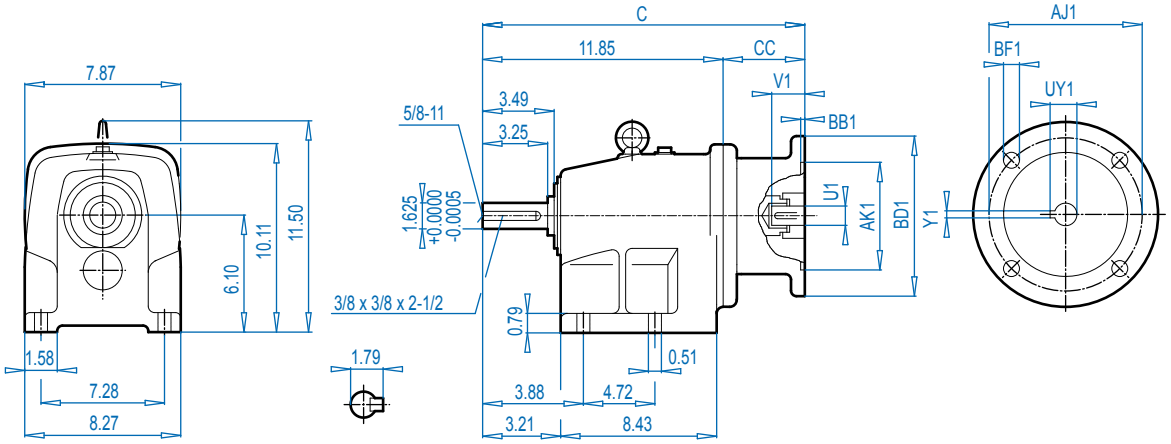

SK 32F

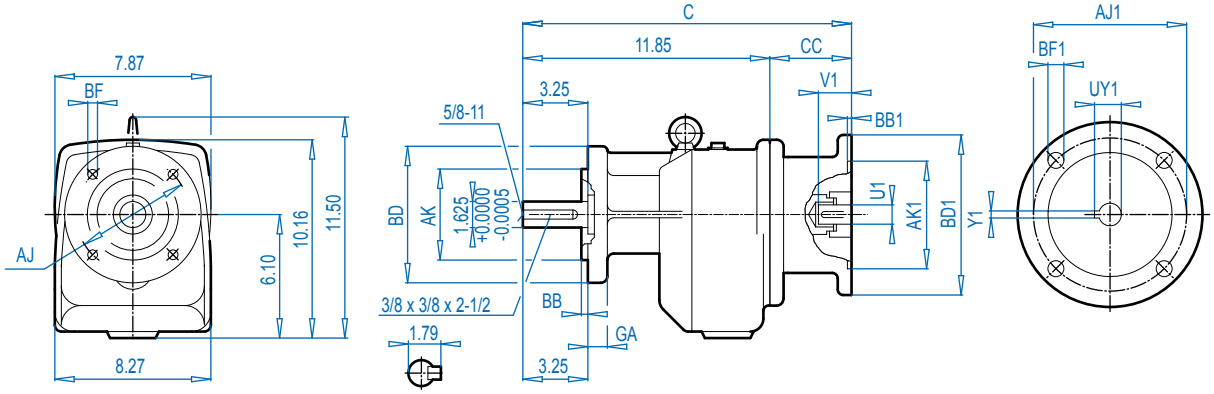

Mounting Flange

BD (mm)	AJ	AK	BB	BF	GA
7.87 (200)	6.50	5.118 $^{+0.0005}_{-0.0004}$	0.14	0.43	0.47
9.84 (250)	8.46	7.087 $^{+0.0005}_{-0.0004}$	0.16	0.55	0.63

NEMA Dimensions

Type	AJ1	AK1	BB1	BD1	BF1	U1	V1	UY1	Y1	C	CC
56C	5.88	4.500	0.18	6.54	0.43	0.625	2.06	0.71	0.188	16.46	4.61
140TC	5.88	4.500	0.18	6.54	0.43	0.875	2.12	0.96	0.188	16.46	4.61
180TC	7.25	8.500	0.23	9.17	0.59	1.125	2.62	1.24	0.250	17.36	5.51
210TC	7.25	8.500	0.23	9.17	0.59	1.375	3.12	1.52	0.312	18.50	6.65

Send Quote Requests to info@automatedpt.com
Call +1(800)985-6929 To Order or Order Online At Nordgearmotors.com

Send Quote Requests to info@automatedpt.com
Call +1(800)985-6929 To Order or Order Online At Nordgearmotors.com

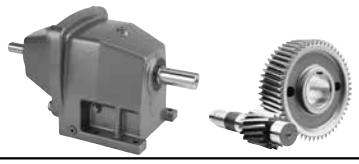

SK 32 - W
SK 32F - W

SK 32

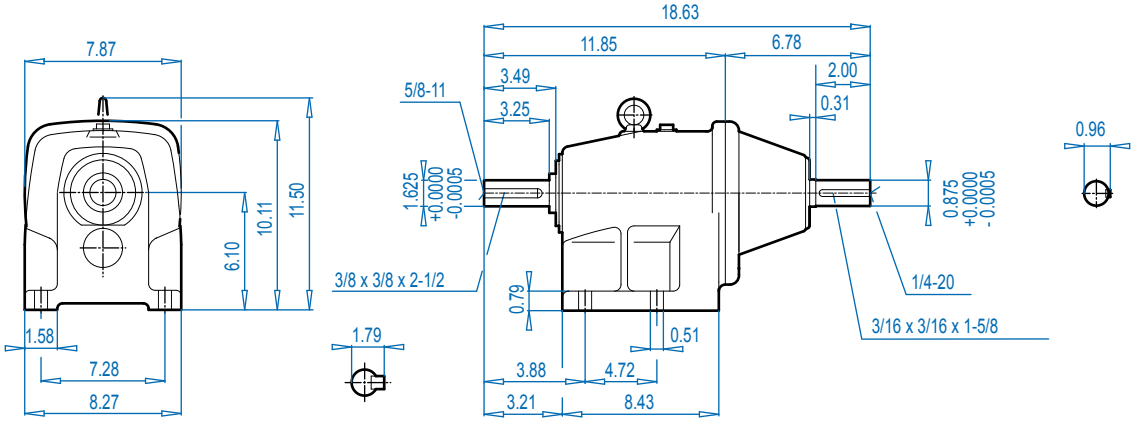

SK 32F

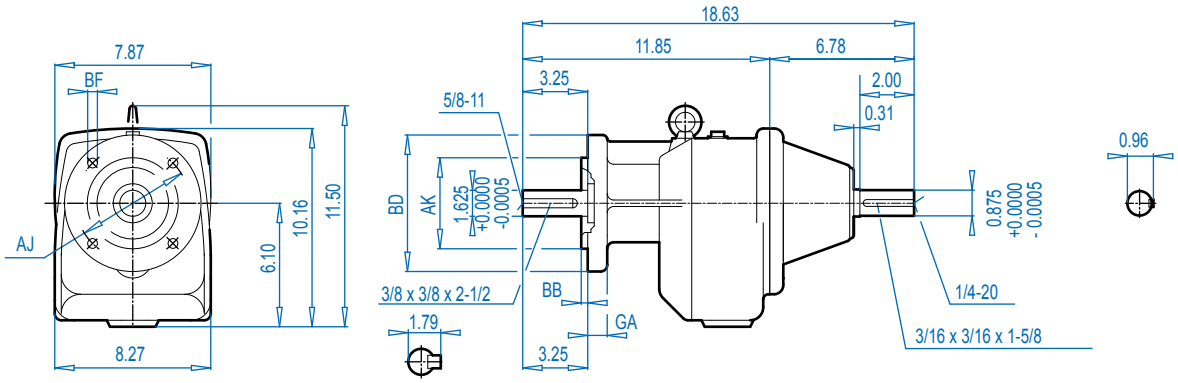

Mounting Flange

BD (mm)	AJ	AK	BB	BF	GA
7.87 (200)	6.50	5.118 $^{+0.0005}_{-0.0004}$	0.14	0.43	0.47
9.84 (250)	8.46	7.087 $^{+0.0005}_{-0.0004}$	0.16	0.55	0.63

ALTERNATE SHAFTS SEE PAGE 239

Send Quote Requests to info@automatedpt.com
Call +1(800)985-6929 To Order or Order Online At Nordgearmotors.com

SK 33N + Motor
SK 33NF + Motor

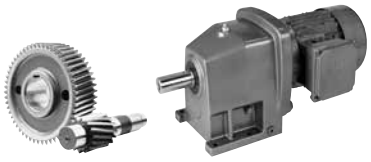

DRIVESYSTEMS

SK 33N

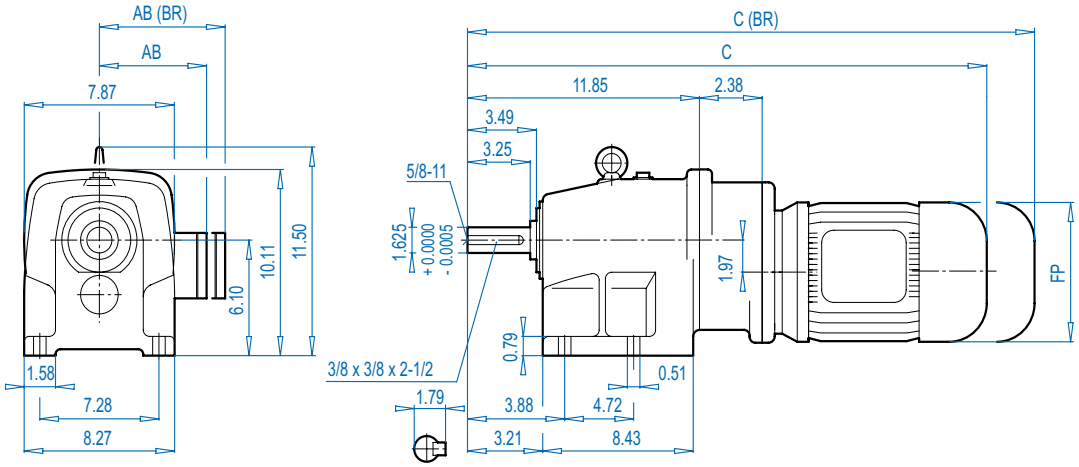

SK 33NF

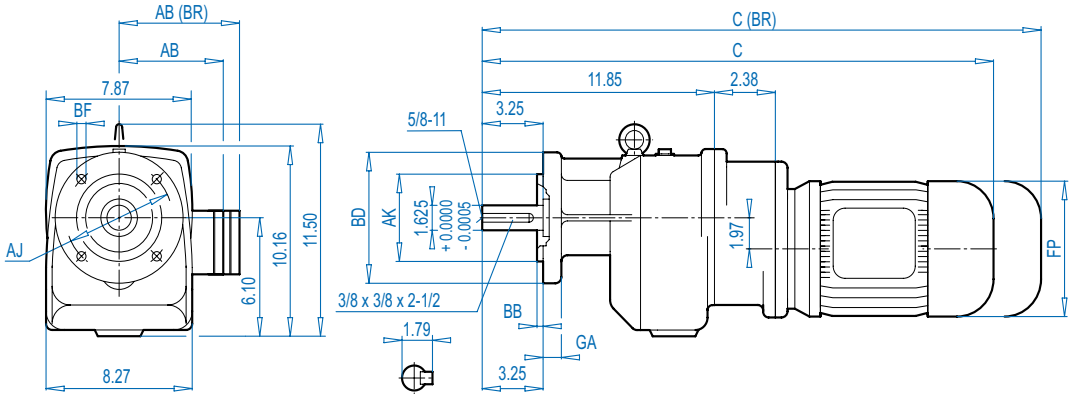

ALTERNATE SHAFTS SEE PAGE 239

Mounting Flange

BD (mm)	AJ	AK	BB	BF	GA
7.87 (200)	6.50	5.118 $^{+0.0005}_{-0.0004}$	0.14	0.43	0.47
9.84 (250)	8.46	7.087 $^{+0.0005}_{-0.0004}$	0.16	0.55	0.63

Motor Dimensions

Standard efficiency	63S/L	71S/L	80S/L	90S/L			For Other Connection Possibilities please see ⇨🕮 236
Energy efficiency			80S/L	90SH/LH			
AB	4.53	4.88	5.59	5.79			
AB (BR)	4.84	5.24	5.63	5.83			
C	21.95	23.53	24.51	26.13			
C (BR)	24.16	25.81	27.03	29.08			
FP	4.84	5.43	6.14	6.92			

(BR) denotes Brakemotor

Send Quote Requests to info@automatedpt.com
Call +1(800)985-6929 To Order or Order Online At Nordgearmotors.com

DRIVESYSTEMS

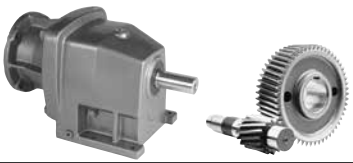

SK 33N + NEMA
SK 33NF + NEMA

SK 33N

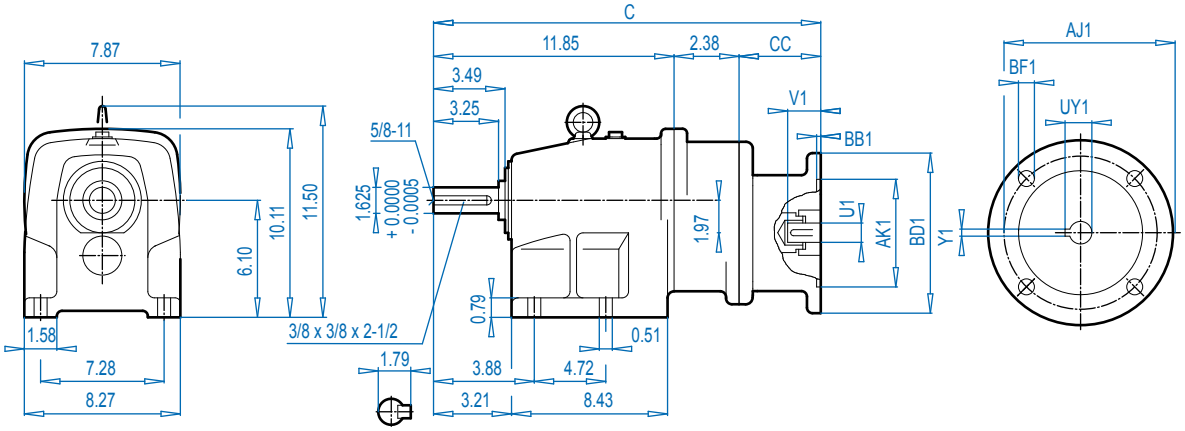

SK 33NF

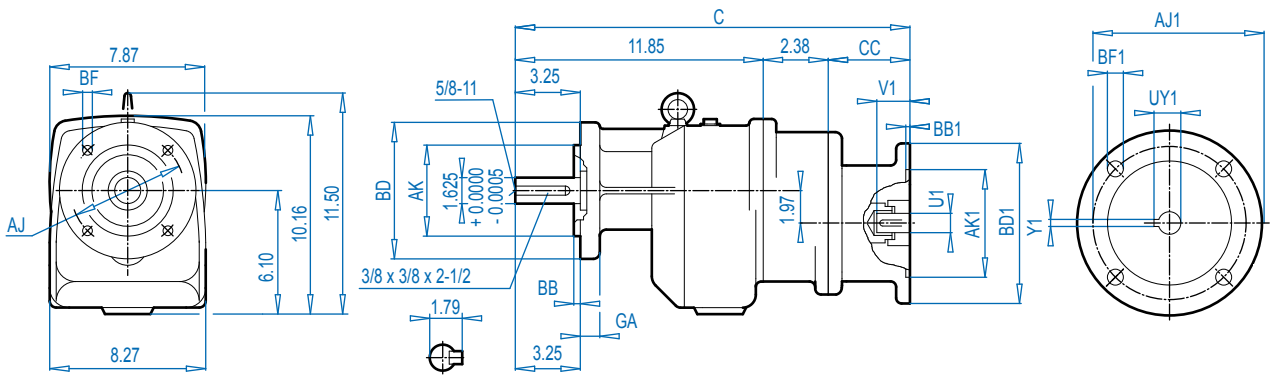

ALTERNATE SHAFTS SEE PAGE 239

Mounting Flange

BD (mm)	AJ	AK	BB	BF	GA
7.87 (200)	6.50	5.118 $^{+0.0005}_{-0.0004}$	0.14	0.43	0.47
9.84 (250)	8.46	7.087 $^{+0.0005}_{-0.0004}$	0.16	0.55	0.63

NEMA Dimensions

Type	AJ1	AK1	BB1	BD1	BF1	U1	V1	UY1	Y1	C	CC
56C	5.88	4.500	0.18	6.54	0.43	0.625	2.06	0.71	0.188	18.68	4.45
140TC	5.88	4.500	0.18	6.54	0.43	0.875	2.12	0.96	0.188	18.68	4.45

Send Quote Requests to info@automatedpt.com
Call +1(800)985-6929 To Order or Order Online At Nordgearmotors.com

Send Quote Requests to info@automatedpt.com
Call +1(800)985-6929 To Order or Order Online At Nordgearmotors.com

SK 33N - W
SK 33NF - W

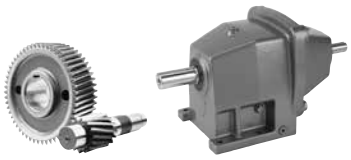

DRIVESYSTEMS

SK 33N

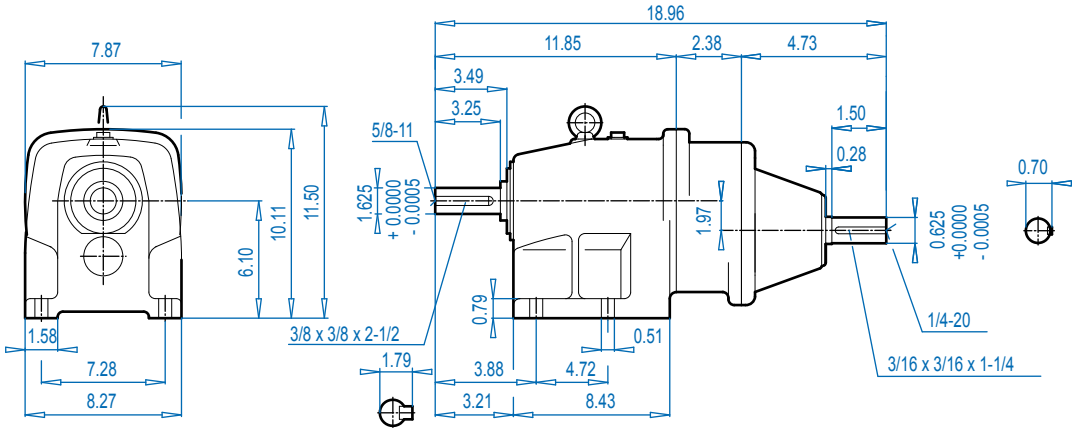

SK 33NF

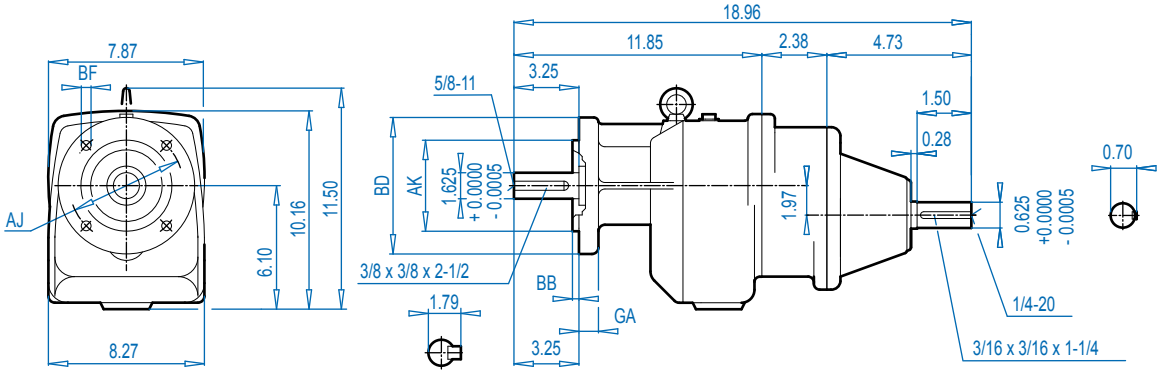

Mounting Flange

BD (mm)	AJ	AK	BB	BF	GA
7.87 (200)	6.50	5.118 $^{+0.0005}_{-0.0004}$	0.14	0.43	0.47
9.84 (250)	8.46	7.087 $^{+0.0005}_{-0.0004}$	0.16	0.55	0.63

ALTERNATE SHAFTS SEE PAGE 239

Send Quote Requests to info@automatedpt.com
Call +1(800)985-6929 To Order or Order Online At Nordgearmotors.com

DRIVESYSTEMS



SK 42 + Motor
SK 42F + Motor

SK 42

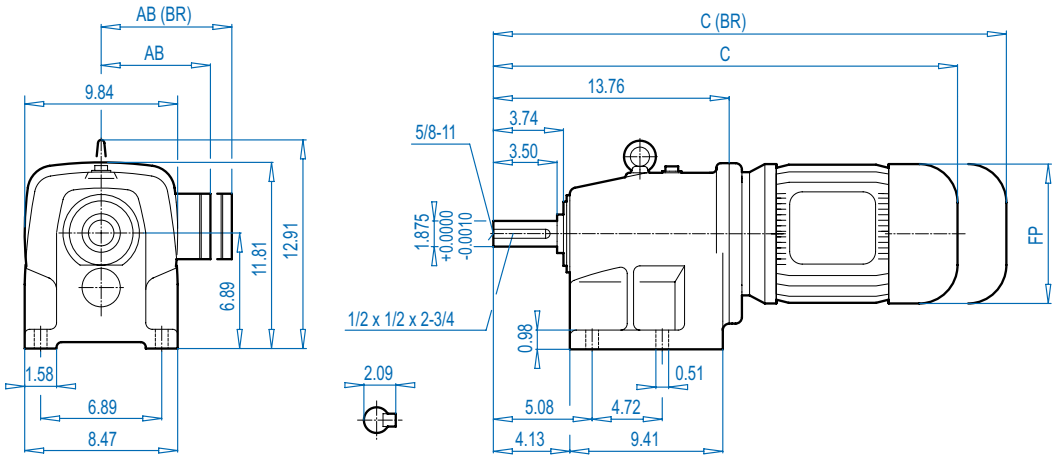

SK 42F

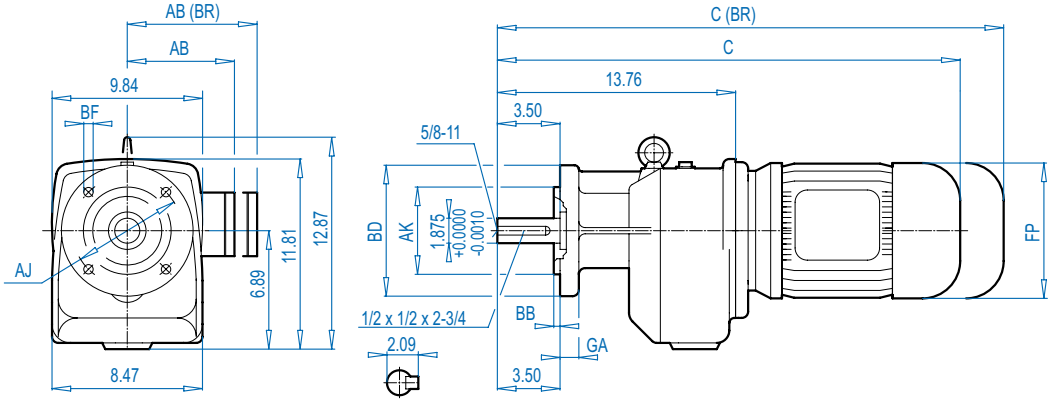

ALTERNATE SHAFTS SEE PAGE 239

Mounting Flange

BD (mm)	AJ	AK	BB	BF	GA
7.87 (200)	6.50	5.118 $^{+0.0005}_{-0.0004}$	0.14	0.43	0.55
9.84 (250)	8.46	7.087 $^{+0.0005}_{-0.0004}$	0.16	0.55	0.63

Motor Dimensions

Standard efficiency	90S/L	100L	112M		132S/M	160M/L		For Other Connection Possibilities please see ⇨📖 236
Energy efficiency	90SH/LH	100LH		112MH	132SH/MH	160MH	160LH	
AB	5.79	6.65	7.05	7.05	8.03	8.90	8.90	
AB (BR)	5.83	6.26	6.69	6.69	7.72	8.90	8.90	
C	24.65	25.83	26.73	27.70	30.12	32.60	34.17	
C (BR)	27.60	29.41	30.39	31.36	34.33	39.17	40.91	
FP	6.92	7.63	8.58	8.58	10.16	12.60	12.60	



(BR) denotes Brakemotor

Send Quote Requests to info@automatedpt.com
Call +1(800)985-6929 To Order or Order Online At Nordgearmotors.com

SK 42 + NEMA
SK 42F + NEMA

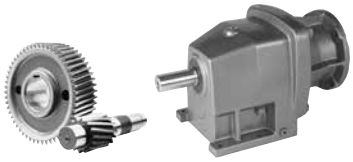

DRIVESYSTEMS

SK 42

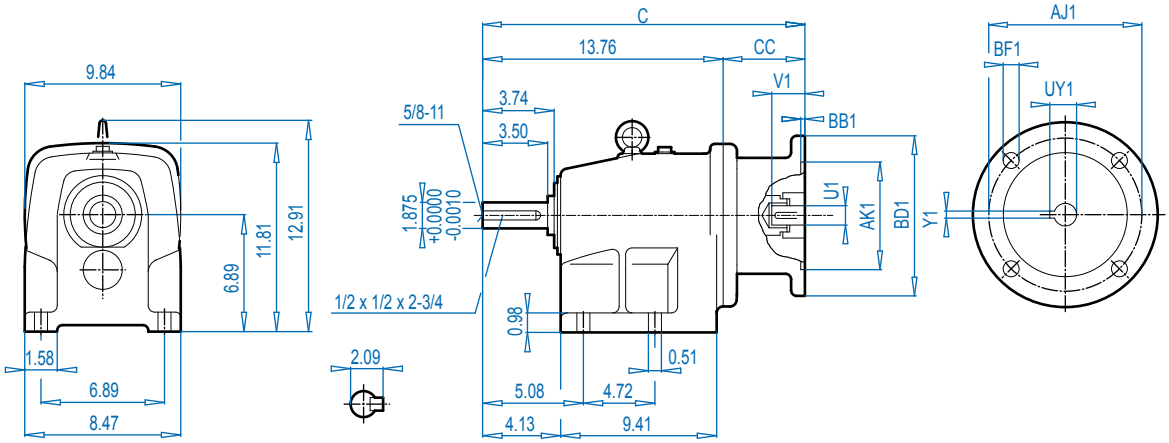

SK 42F

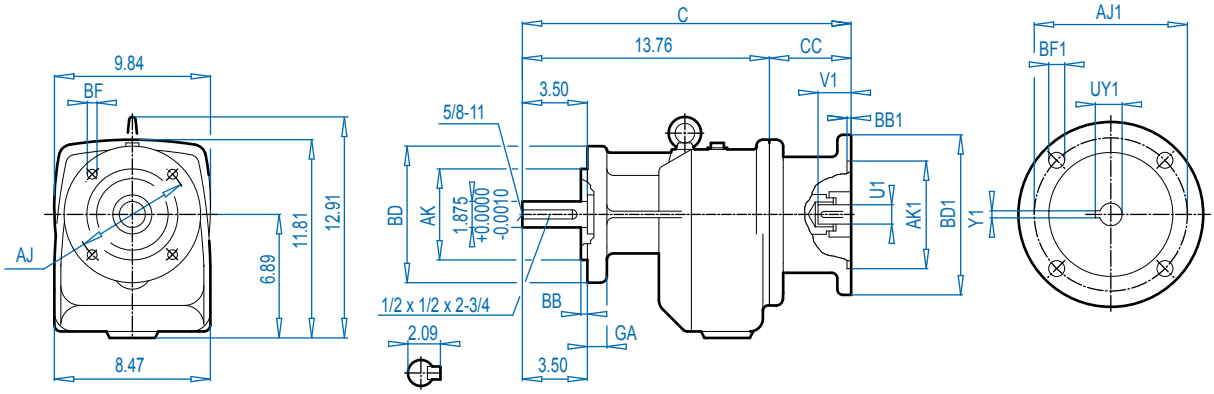

ALTERNATE SHAFTS SEE PAGE 239

Mounting Flange

BD (mm)	AJ	AK	BB	BF	GA
7.87 (200)	6.50	5.118 $^{+0.0005}_{-0.0004}$	0.14	0.43	0.55
9.84 (250)	8.46	7.087 $^{+0.0005}_{-0.0004}$	0.16	0.55	0.63

NEMA Dimensions

Type	AJ1	AK1	BB1	BD1	BF1	U1	V1	UY1	Y1	C	CC
56C	5.88	4.500	0.18	6.54	0.43	0.625	2.06	0.71	0.188	18.09	4.33
140TC	5.88	4.500	0.18	6.54	0.43	0.875	2.12	0.96	0.188	18.09	4.33
180TC	7.25	8.500	0.23	9.17	0.59	1.125	2.62	1.24	0.250	21.67	7.91
210TC	7.25	8.500	0.23	9.17	0.59	1.375	3.12	1.52	0.312	21.67	7.91
250TC	7.25	8.500	0.23	9.17	0.59	1.625	3.75	1.80	0.375	21.67	7.91

Send Quote Requests to info@automatedpt.com
Call +1(800)985-6929 To Order or Order Online At Nordgearmotors.com

DRIVESYSTEMS

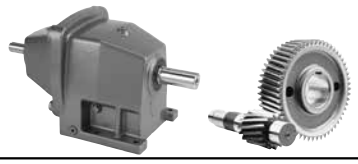

SK 42 - W
SK 42F - W

SK 42

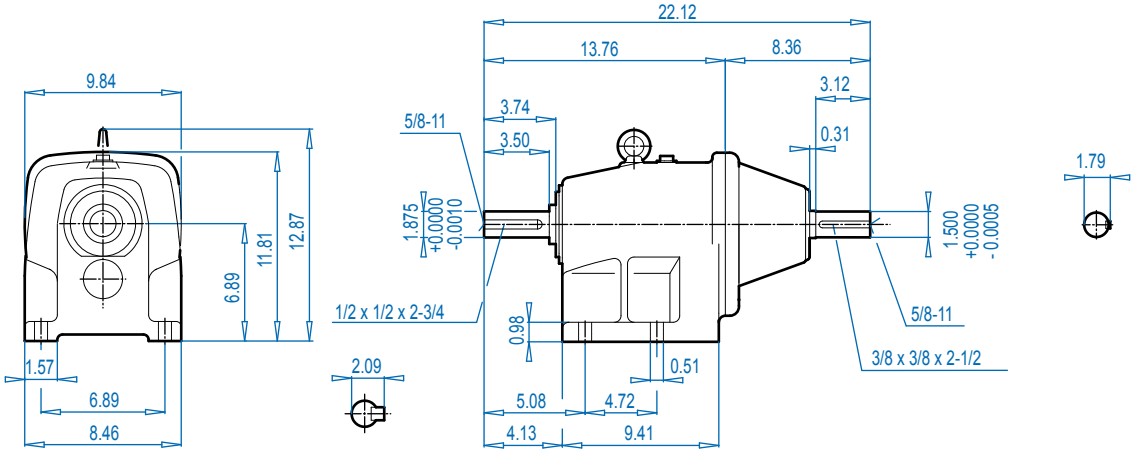

SK 42F

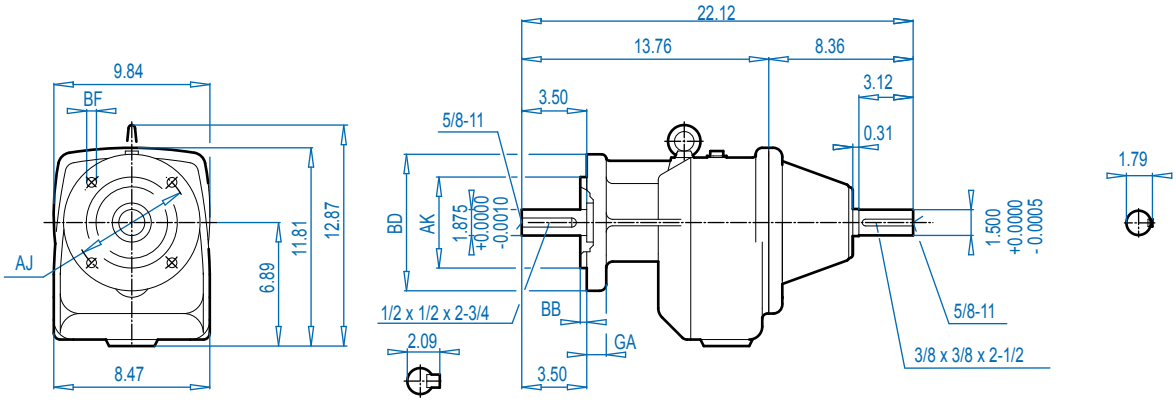

Mounting Flange

BD (mm)	AJ	AK	BB	BF	GA
7.87 (200)	6.50	5.118 $^{+0.0005}_{-0.0004}$	0.14	0.43	0.55
9.84 (250)	8.46	7.087 $^{+0.0005}_{-0.0004}$	0.16	0.55	0.63

ALTERNATE SHAFTS SEE PAGE 239

Send Quote Requests to info@automatedpt.com
Call +1(800)985-6929 To Order or Order Online At Nordgearmotors.com

SK 43 + Motor
SK 43F + Motor

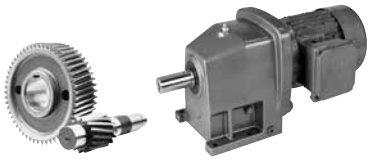

DRIVESYSTEMS

SK 43

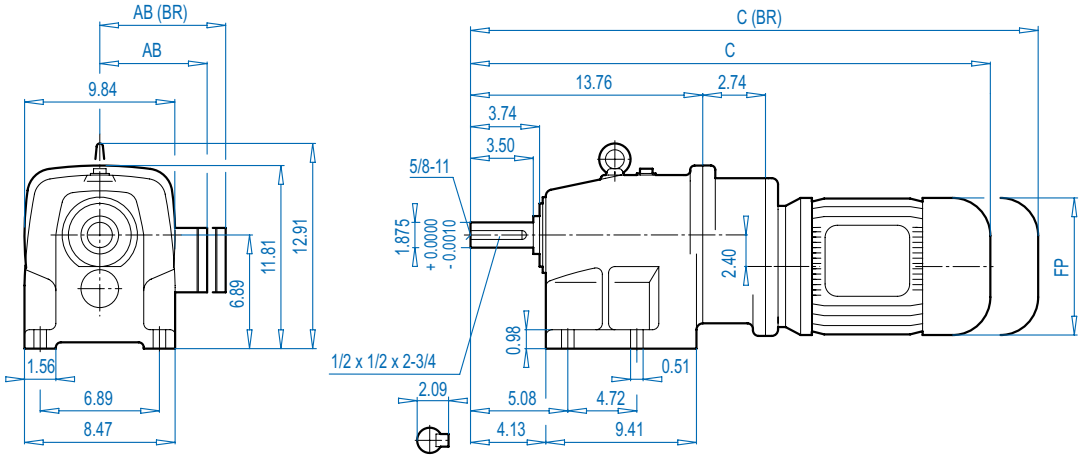

SK 43F

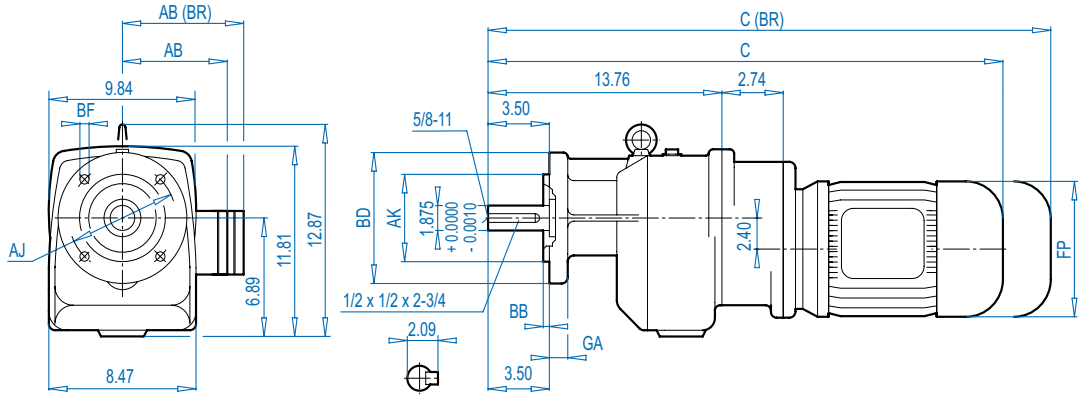

ALTERNATE SHAFTS SEE PAGE 239

Mounting Flange

BD (mm)	AJ	AK	BB	BF	GA
7.87 (200)	6.50	5.118 $^{+0.0005}_{-0.0004}$	0.14	0.43	0.55
9.84 (250)	8.46	7.087 $^{+0.0005}_{-0.0004}$	0.16	0.55	0.63

Motor Dimensions

Standard efficiency	71S/L	80S/L	90S/L	100L	112M		For Other Connection Possibilities please see ⇨ 236
Energy efficiency		80LH	90SH/LH	100LH		112MH	
AB	4.88	5.59	5.79	6.65	7.05	**7.05**	
AB (BR)	5.24	5.63	5.83	6.26	6.69	**6.69**	
C	25.55	26.54	28.15	29.33	30.24	**31.21**	
C (BR)	27.83	29.05	31.10	32.91	33.90	**34.87**	
FP	5.43	6.14	6.92	7.63	8.58	**8.58**	



(BR) denotes Brakemotor

Send Quote Requests to info@automatedpt.com
Call +1(800)985-6929 To Order or Order Online At Nordgearmotors.com

Send Quote Requests to info@automatedpt.com
Call +1(800)985-6929 To Order or Order Online At Nordgearmotors.com

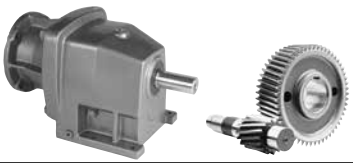

SK 43 + NEMA
SK 43F + NEMA

SK 43

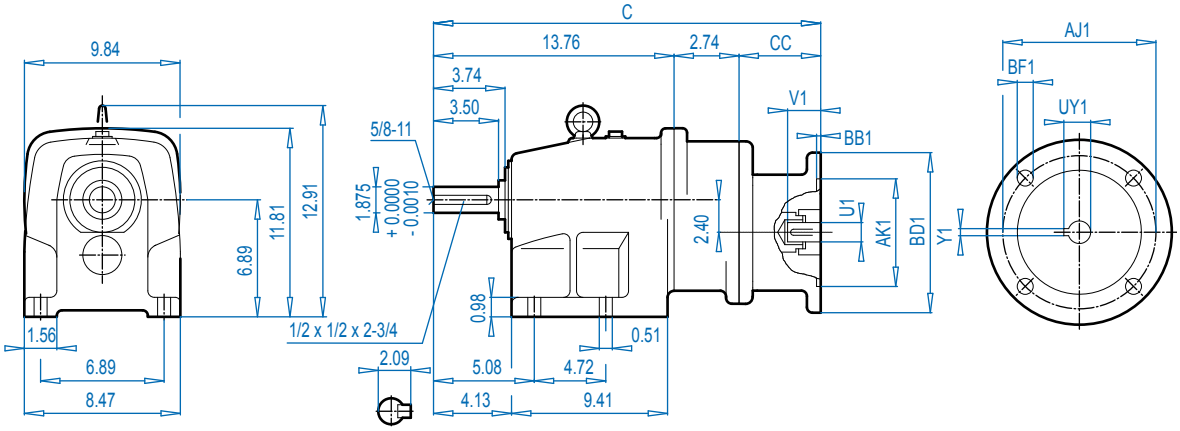

SK 43F

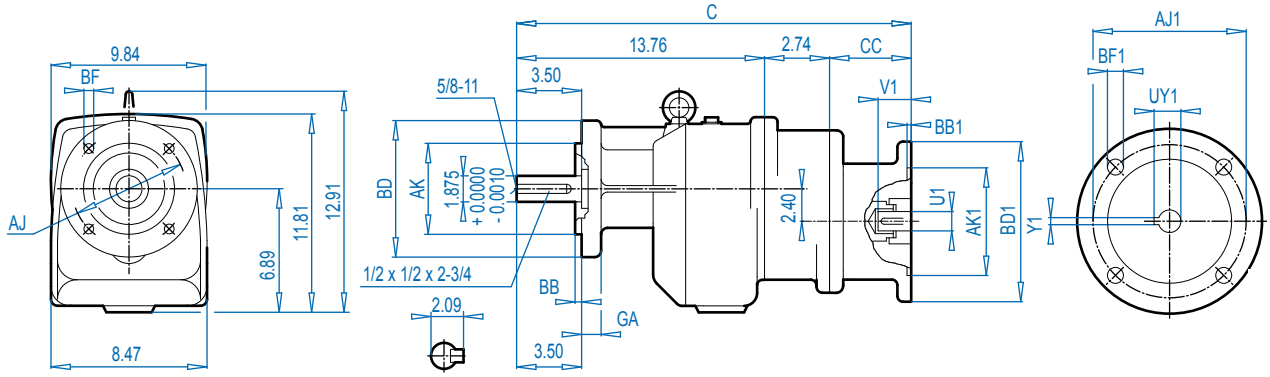

Mounting Flange

BD (mm)	AJ	AK	BB	BF	GA
7.87 (200)	6.50	5.118 $^{+0.0005}_{-0.0004}$	0.14	0.43	0.55
9.84 (250)	8.46	7.087 $^{+0.0005}_{-0.0004}$	0.16	0.55	0.63

NEMA Dimensions

Type	AJ1	AK1	BB1	BD1	BF1	U1	V1	UY1	Y1	C	CC
56C	5.88	4.500	0.18	6.54	0.43	0.625	2.06	0.71	0.188	21.01	4.61
140TC	5.88	4.500	0.18	6.54	0.43	0.875	2.12	0.96	0.188	21.01	4.61
180TC	7.25	8.500	0.23	9.17	0.59	1.125	2.62	1.24	0.250	23.14	6.65

ALTERNATE SHAFTS SEE PAGE 239

Send Quote Requests to info@automatedpt.com
Call +1(800)985-6929 To Order or Order Online At Nordgearmotors.com

Send Quote Requests to info@automatedpt.com
Call +1(800)985-6929 To Order or Order Online At Nordgearmotors.com

SK 43 - W
SK 43F - W

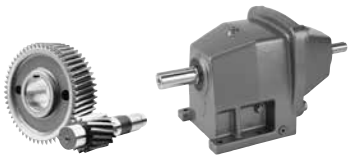

DRIVESYSTEMS

SK 43

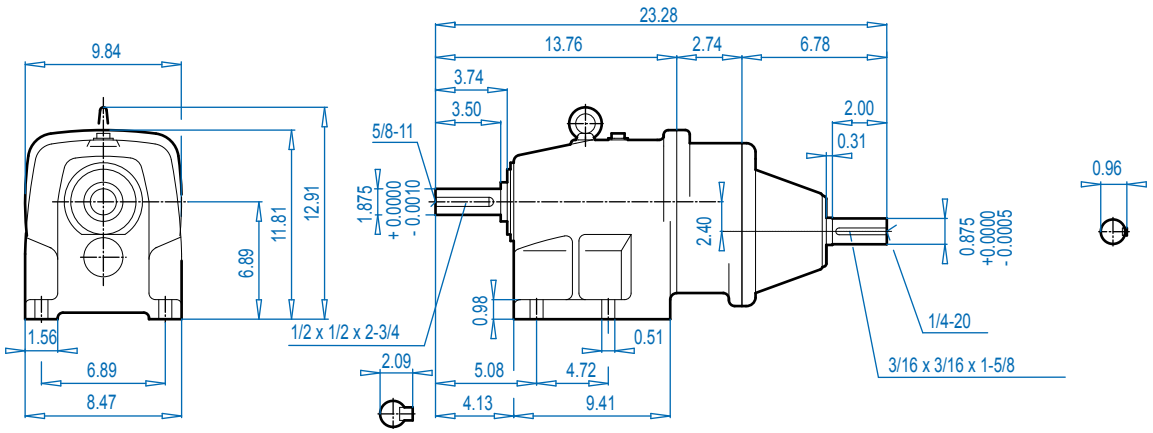

SK 43F

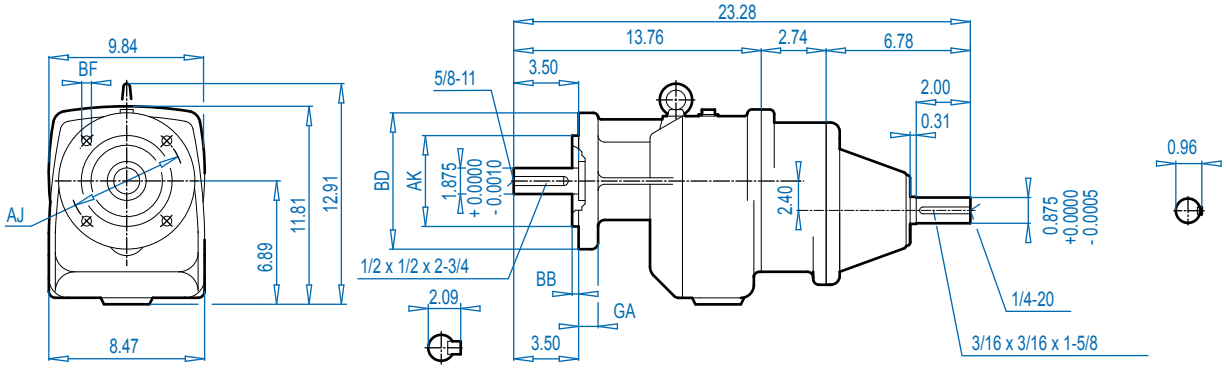

Mounting Flange

BD (mm)	AJ	AK	BB	BF	GA
7.87 (200)	6.50	5.118 $^{+0.0005}_{-0.0004}$	0.14	0.43	0.55
9.84 (250)	8.46	7.087 $^{+0.0005}_{-0.0004}$	0.16	0.55	0.63

ALTERNATE SHAFTS SEE PAGE 239

Send Quote Requests to info@automatedpt.com
Call +1(800)985-6929 To Order or Order Online At Nordgearmotors.com

DRIVESYSTEMS



SK 52 + Motor
SK 52F + Motor

SK 52

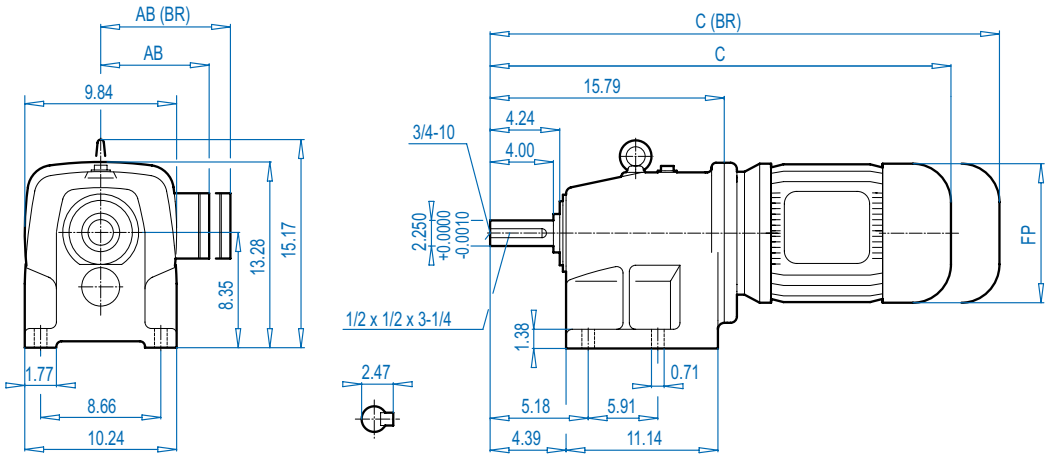

SK 52F

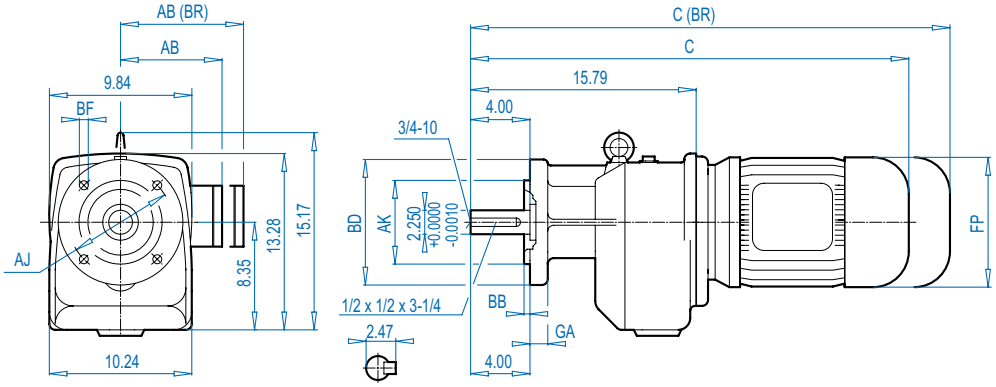

ALTERNATE SHAFTS SEE PAGE 239

Mounting Flange

BD (mm)	AJ	AK	BB	BF	GA
9.84 (250)	8.46	7.087 $^{+0.0005}_{-0.0004}$	0.16	0.55	0.63
11.81 (300)	10.43	9.055 $^{+0.0006}_{-0.0005}$	0.16	0.55	0.79

Motor Dimensions

Standard eff.	90S/L	100L	112M	132S/M	160M/L		180MX	180LX		For Other Connection Possibilities please see ⇨🕮 236
Energy eff.	90SH/LH	100LH		132SH/MH	160MH	160LH			180MH/LH	
AB	5.79	6.65	7.05	8.03	8.90	8.90	8.90	8.90	10.20	
AB (BR)	5.83	6.26	6.69	7.72	8.90	8.90	8.90	8.90	10.20	
C	26.68	27.86	28.77	32.15	34.63	36.21	36.21	36.21	40.30	
C (BR)	29.63	31.44	32.43	36.37	41.21	42.94	42.94	42.94	44.44	
FP	6.92	7.63	8.58	10.16	12.60	12.60	12.60	12.60	14.09	

(BR) denotes Brakemotor.

Send Quote Requests to info@automatedpt.com
Call +1(800)985-6929 To Order or Order Online At Nordgearmotors.com

SK 52 + NEMA
SK 52F + NEMA

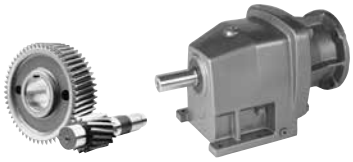

SK 52

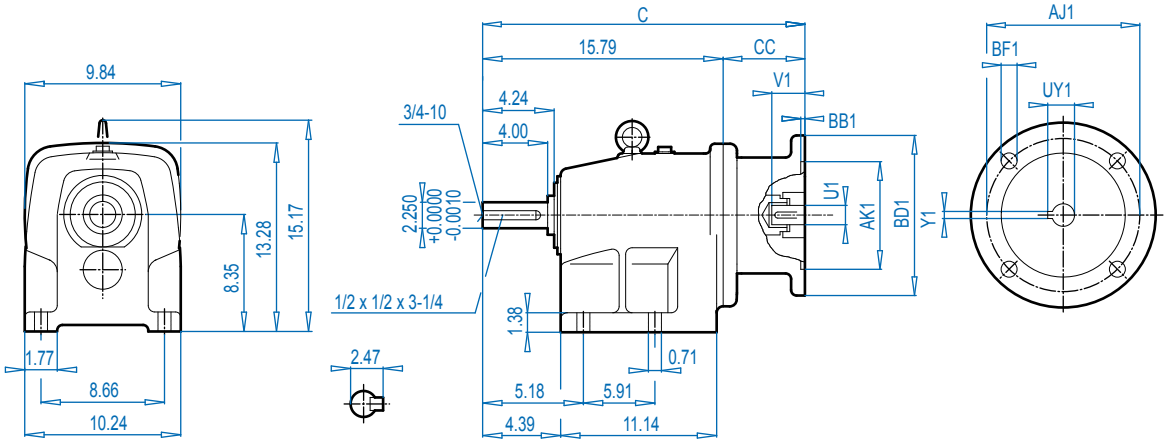

SK 52F

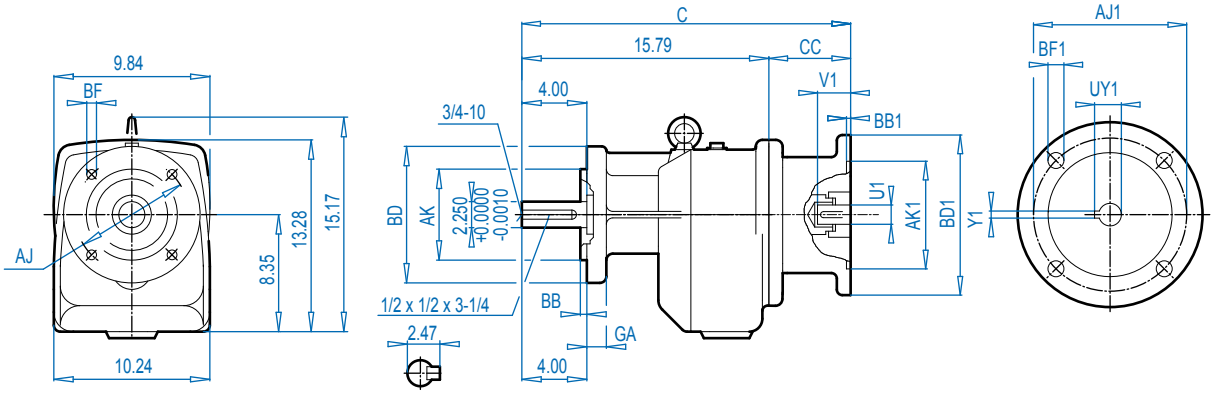

ALTERNATE SHAFTS SEE PAGE 239

Mounting Flange

BD (mm)	AJ	AK	BB	BF	GA
9.84 (250)	8.46	7.087 $^{+0.0005}_{-0.0004}$	0.16	0.55	0.63
11.81 (300)	10.43	9.055 $^{+0.0006}_{-0.0005}$	0.16	0.55	0.79

NEMA Dimensions

Type	AJ1	AK1	BB1	BD1	BF1	U1	V1	UY1	Y1	C	CC
56C	5.88	4.500	0.18	6.54	0.43	0.625	2.06	0.71	0.188	20.12	4.33
140TC	5.88	4.500	0.18	6.54	0.43	0.875	2.12	0.96	0.188	20.12	4.33
180TC	7.25	8.500	0.23	9.17	0.59	1.125	2.62	1.24	0.250	23.71	7.91
210TC	7.25	8.500	0.39	9.17	0.59	1.375	3.12	1.52	0.312	23.71	7.91
250TC	7.25	8.500	0.23	9.17	0.59	1.625	3.75	1.80	0.375	23.71	7.91
280TC	9.00	10.500	0.23	13.78	0.59	1.875	4.38	2.03	0.500	24.34	8.54

Send Quote Requests to info@automatedpt.com
Call +1(800)985-6929 To Order or Order Online At Nordgearmotors.com

DRIVESYSTEMS

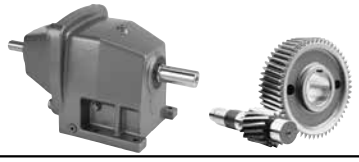

SK 52 - W
SK 52F - W

SK 52

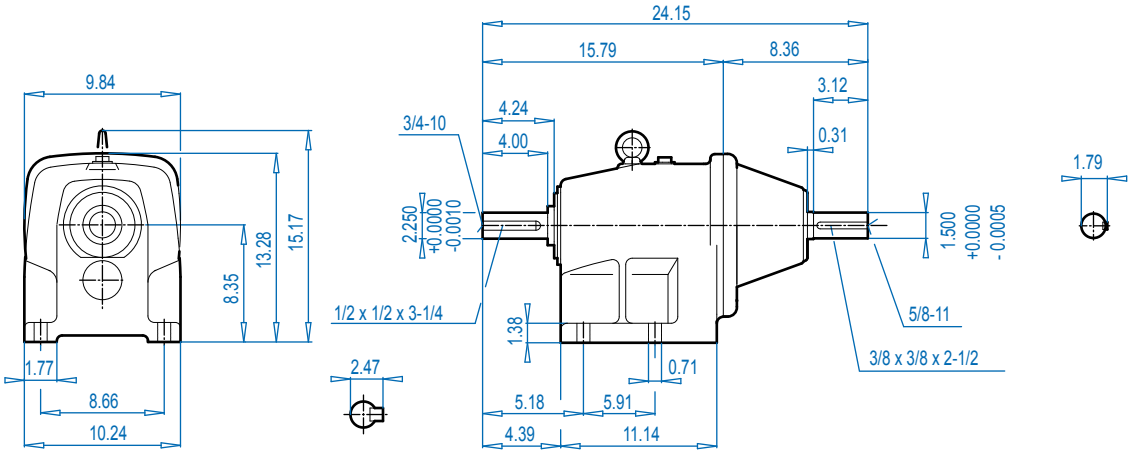

SK 52F

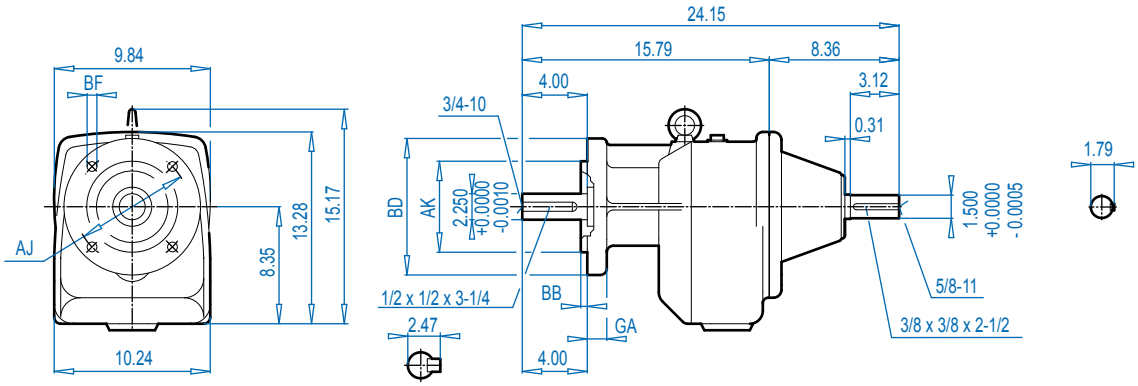

Mounting Flange

BD (mm)	AJ	AK	BB	BF	GA
9.84 (250)	8.46	7.087 $^{+0.0005}_{-0.0004}$	0.16	0.55	0.63
11.81 (300)	10.43	9.055 $^{+0.0006}_{-0.0005}$	0.16	0.55	0.79

ALTERNATE SHAFTS SEE PAGE 239

Send Quote Requests to info@automatedpt.com
Call +1(800)985-6929 To Order or Order Online At Nordgearmotors.com

SK 53 + Motor
SK 53F + Motor

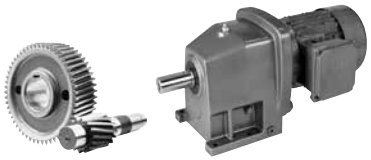

DRIVESYSTEMS

SK 53

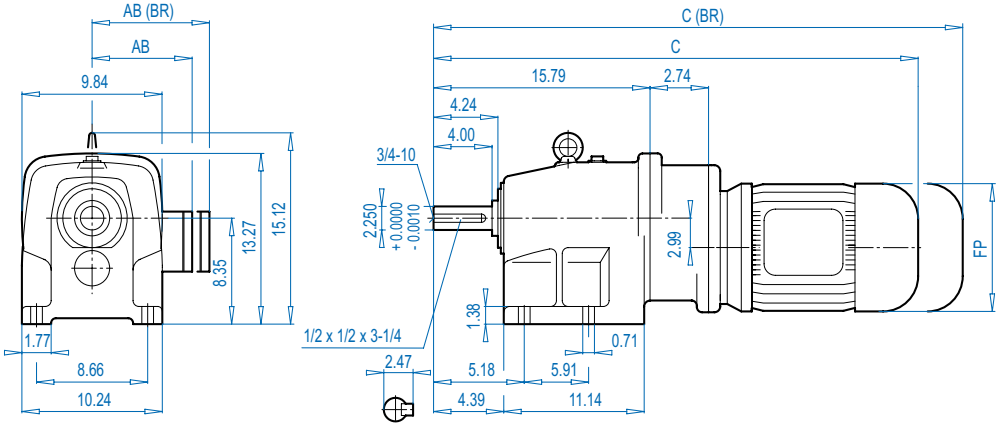

ALTERNATE SHAFTS SEE PAGE 239

SK 53F

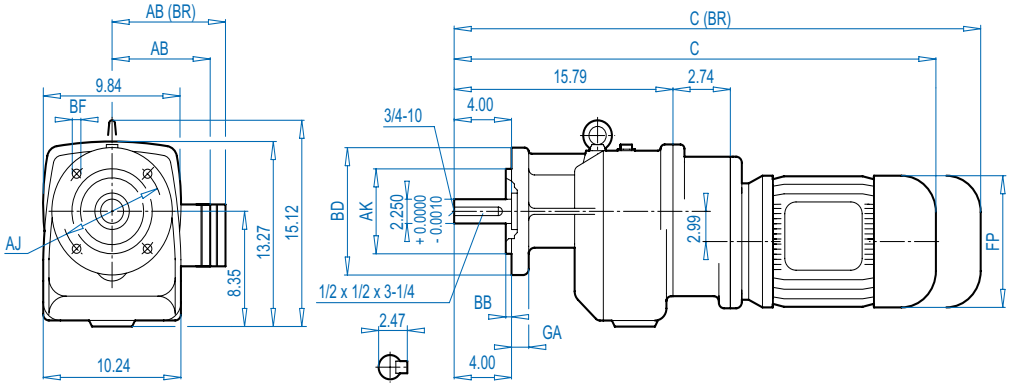

Mounting Flange

BD (mm)	AJ	AK	BB	BF	GA
9.84 (250)	8.46	7.087 $^{+0.0005}_{-0.0004}$	0.16	0.55	0.63
11.81 (300)	10.43	9.055 $^{+0.0006}_{-0.0005}$	0.16	0.55	0.79

Motor Dimensions

Standard efficiency	71S/L	80S/L	90S/L	100L	112M		For Other Connection Possibilities please see ⇨ 236
Energy efficiency		80LH	90SH/LH	100LH		112MH	
AB	4.88	5.59	5.79	6.65	7.05	7.05	
AB (BR)	5.24	5.63	5.83	6.26	6.69	6.69	
C	27.58	28.57	30.18	31.36	32.27	33.24	
C (BR)	29.87	31.09	33.13	34.94	35.93	36.90	
FP	5.43	6.14	6.92	7.63	8.58	8.58	

(BR) denotes Brakemotor

Send Quote Requests to info@automatedpt.com
Call +1(800)985-6929 To Order or Order Online At Nordgearmotors.com

DRIVESYSTEMS

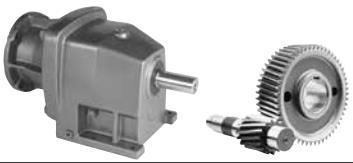

SK 53 + NEMA
SK 53F + NEMA

SK 53

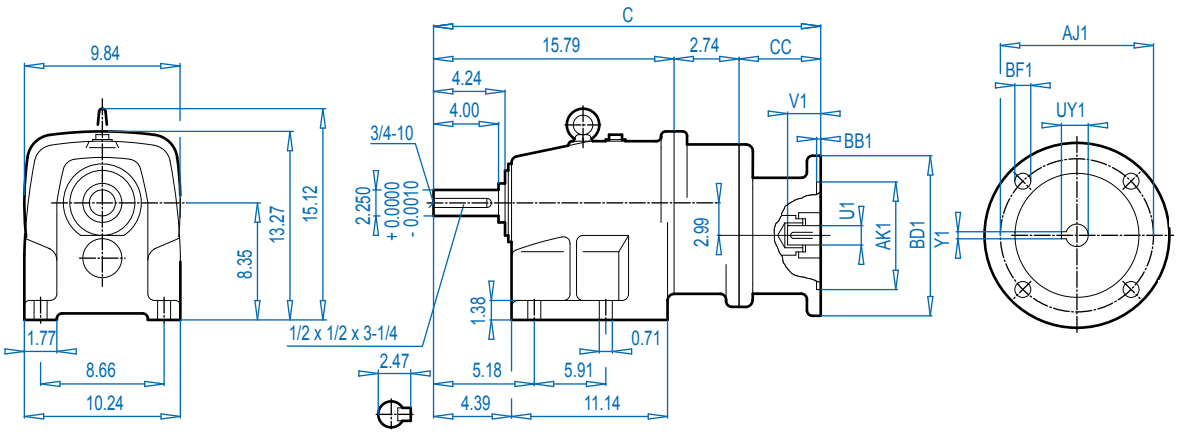

SK 53F

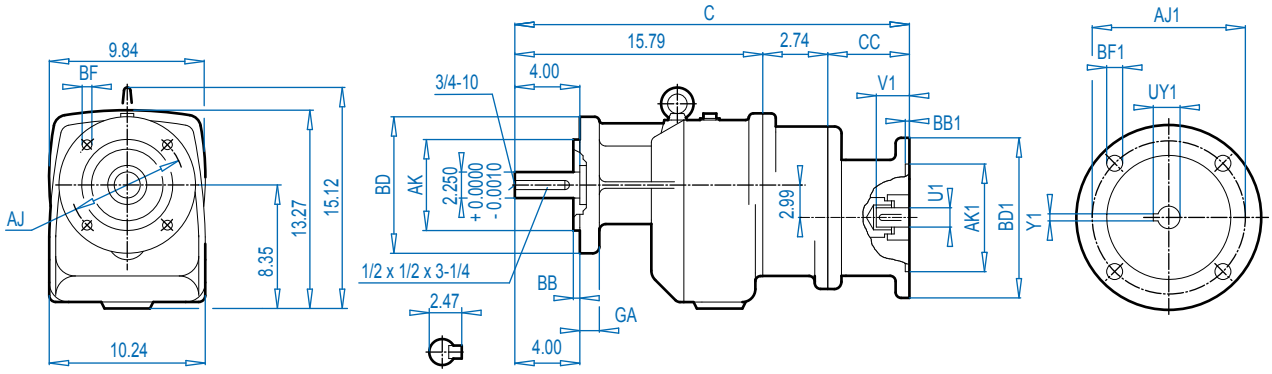

ALTERNATE SHAFTS SEE PAGE 239

Mounting Flange

BD (mm)	AJ	AK	BB	BF	GA
9.84 (250)	8.46	7.087 $^{+0.0005}_{-0.0004}$	0.16	0.55	0.63
11.81 (300)	10.43	9.055 $^{+0.0006}_{-0.0005}$	0.16	0.55	0.79

NEMA Dimensions

Type	AJ1	AK1	BB1	BD1	BF1	U1	V1	UY1	Y1	C	CC
56C	5.88	4.500	0.18	6.54	0.43	0.625	2.06	0.71	0.188	23.13	4.61
140TC	5.88	4.500	0.18	6.54	0.43	0.875	2.12	0.96	0.188	23.13	4.61
180TC	7.25	8.500	0.23	9.17	0.59	1.125	2.62	1.24	0.250	25.17	6.65

Send Quote Requests to info@automatedpt.com
Call +1(800)985-6929 To Order or Order Online At Nordgearmotors.com

SK 53 - W
SK 53F - W

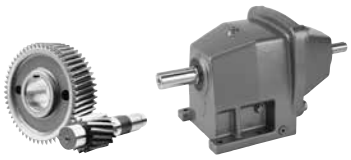

DRIVESYSTEMS

SK 53

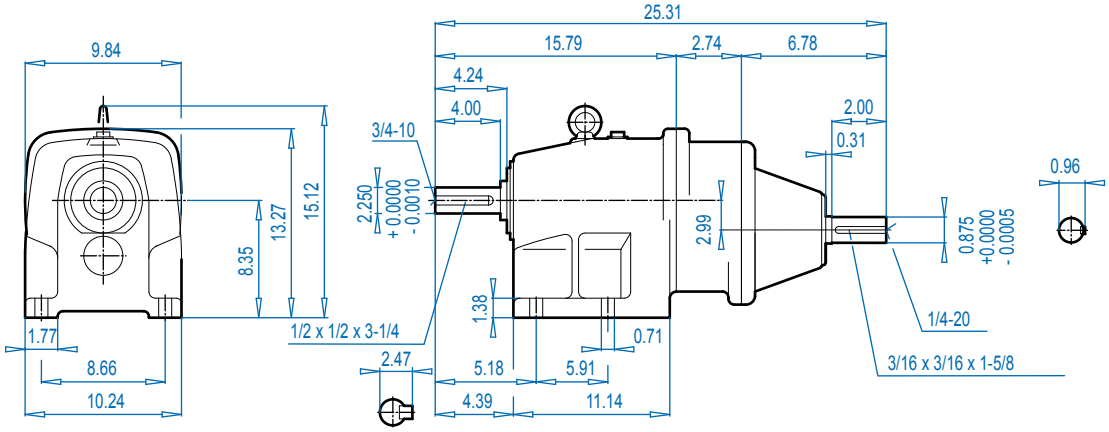

SK 53F

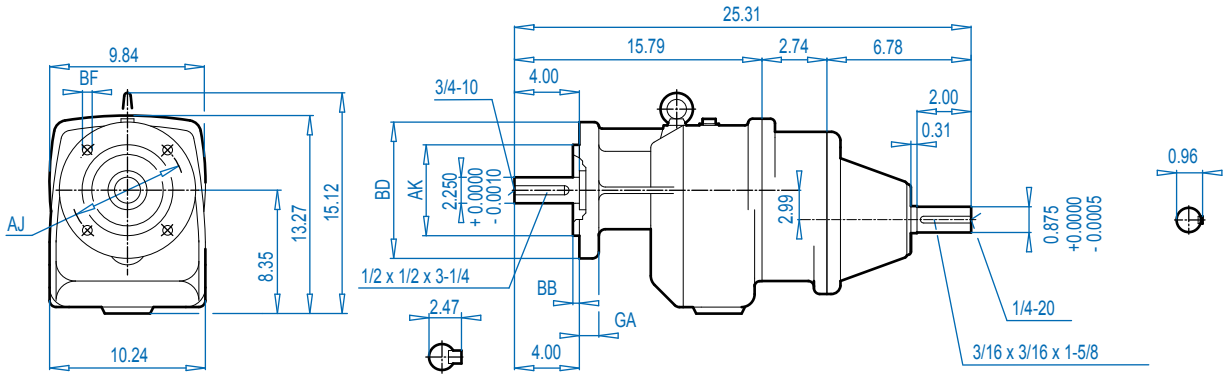

ALTERNATE SHAFTS SEE PAGE 239

Mounting Flange

BD (mm)	AJ	AK	BB	BF	GA
9.84 (250)	8.46	7.087 $^{+0.0005}_{-0.0004}$	0.16	0.55	0.63
11.81 (300)	10.43	9.055 $^{+0.0006}_{-0.0005}$	0.16	0.55	0.79

Send Quote Requests to info@automatedpt.com
Call +1(800)985-6929 To Order or Order Online At Nordgearmotors.com

DRIVESYSTEMS



SK 62 + Motor
SK 62F + Motor

SK 62

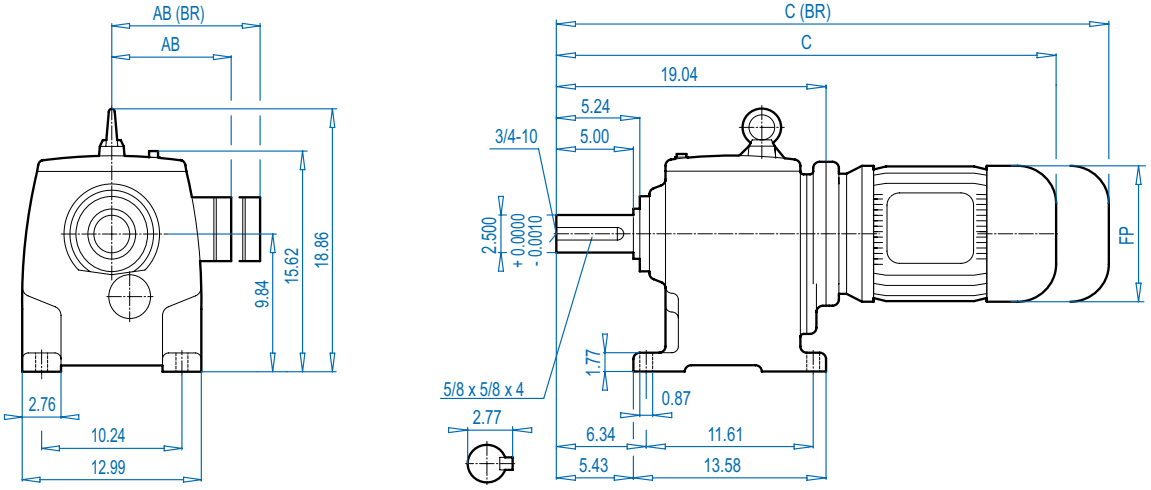

SK 62F

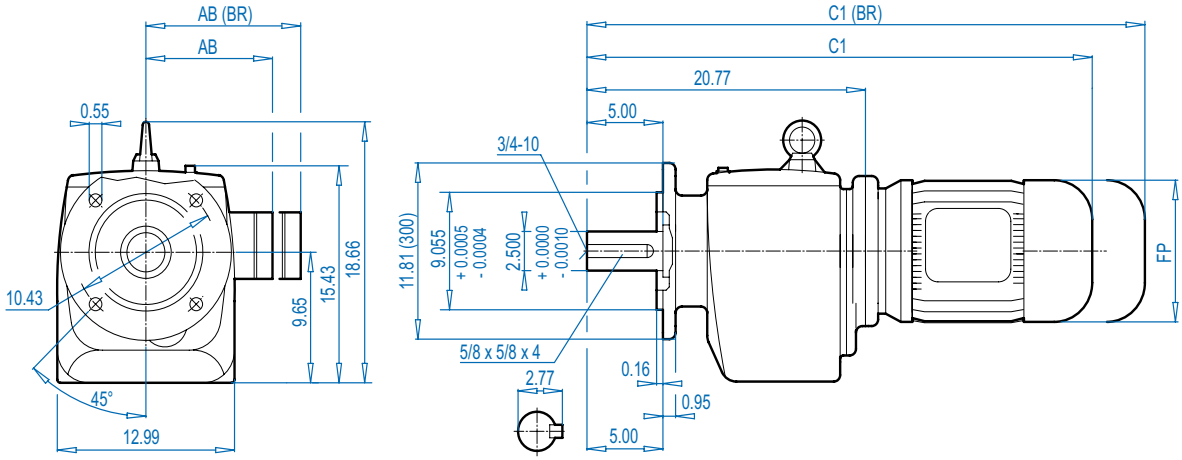

ALTERNATE SHAFTS SEE PAGE 239

Motor Dimensions

Standard eff.	132S/M	160M/L		180MX/LX		200L	225S/M		For Other Connection Possibilities please see ⇨ 237
Energy eff.	132SH/MH	160MH	160LH		180MH/LH	200LH		225SH/MH	
AB	8.03	8.90	8.90	8.90	10.20	12.05	12.05	12.80	
AB (BR)	7.72	8.90	8.90	8.90	10.20	12.05	12.05	-	
C	36.19	37.88	39.45	39.45	42.76	46.15	46.15	46.03	
C (BR)	40.40	44.45	46.18	46.18	46.89	52.72	52.72	-	
C1	37.91	39.61	41.18	41.18	44.49	47.88	47.88	47.76	
C1 (BR)	42.13	46.18	47.91	47.91	48.62	54.45	54.45	-	
FP	10.47	12.60	12.60	12.60	14.09	15.67	15.67	17.52	



(BR) denotes Brakemotor

Send Quote Requests to info@automatedpt.com
Call +1(800)985-6929 To Order or Order Online At Nordgearmotors.com

SK 62 + NEMA
SK 62F + NEMA

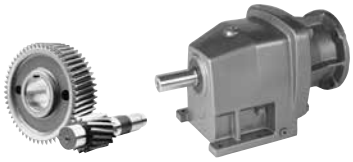

SK 62

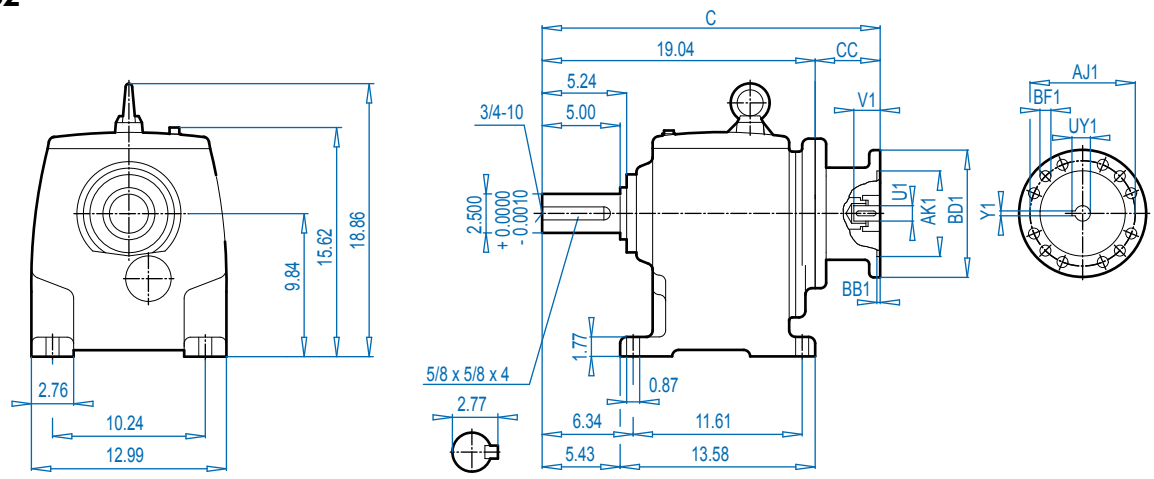

SK 62F

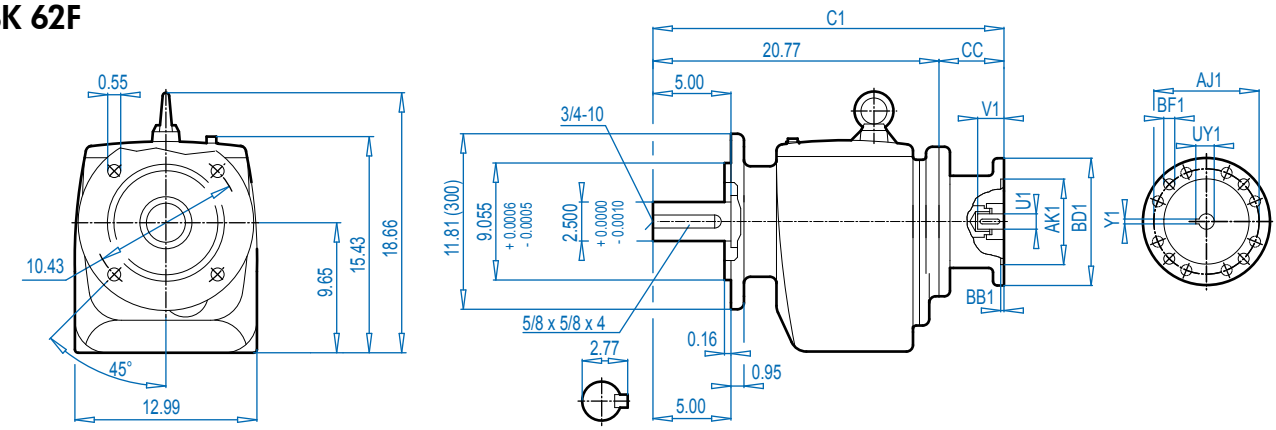

NEMA Dimensions

Type	AJ1	AK1	BB1	BD1	BF1	U1	V1	UY1	Y1	C	C1	CC
180TC	7.25	8.500	0.23	9.17	0.59	1.125	2.62	1.24	0.250	26.56	28.31	7.52
210TC	7.25	8.500	0.39	9.17	0.59	1.375	3.12	1.52	0.312	26.56	28.31	7.52
250TC	7.25	8.500	0.23	9.17	0.59	1.625	3.75	1.80	0.375	30.41	32.17	11.38
280TC	9.00	10.500	0.23	13.78	0.59	1.875	4.38	2.03	0.500	30.41	32.17	11.38
320TC	11.00	12.500	0.23	13.78	0.71	2.125	5.00	2.35	0.500	29.39	31.14	10.35
360TC	11.00	12.500	0.16	17.72	0.71	2.375	5.62	2.65	0.625	32.30	34.49	13.27

Send Quote Requests to info@automatedpt.com
Call +1(800)985-6929 To Order or Order Online At Nordgearmotors.com

DRIVESYSTEMS

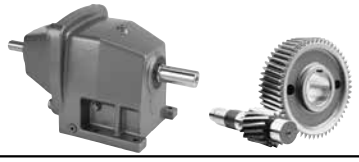

SK 62 - W
SK 62F - W

SK 62

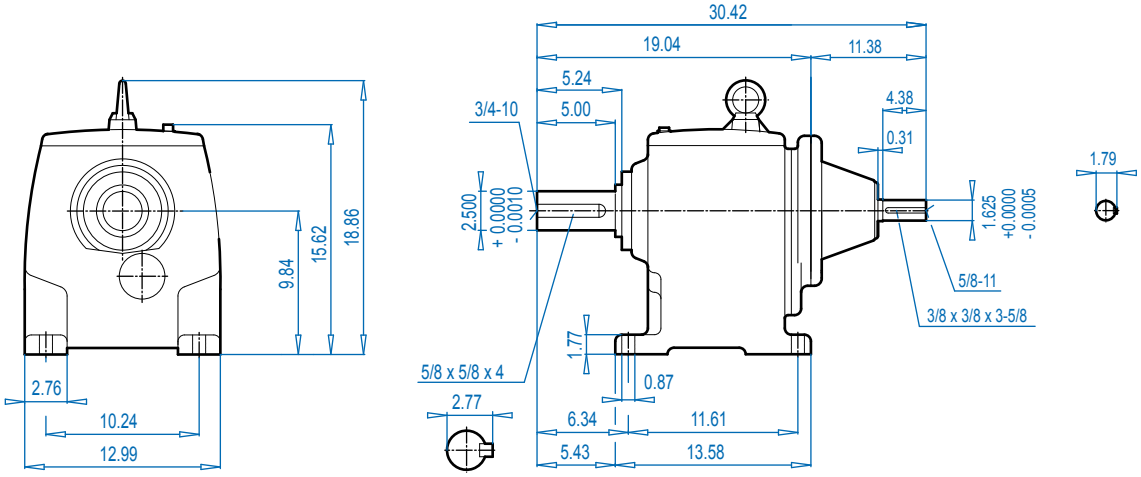

SK 62F

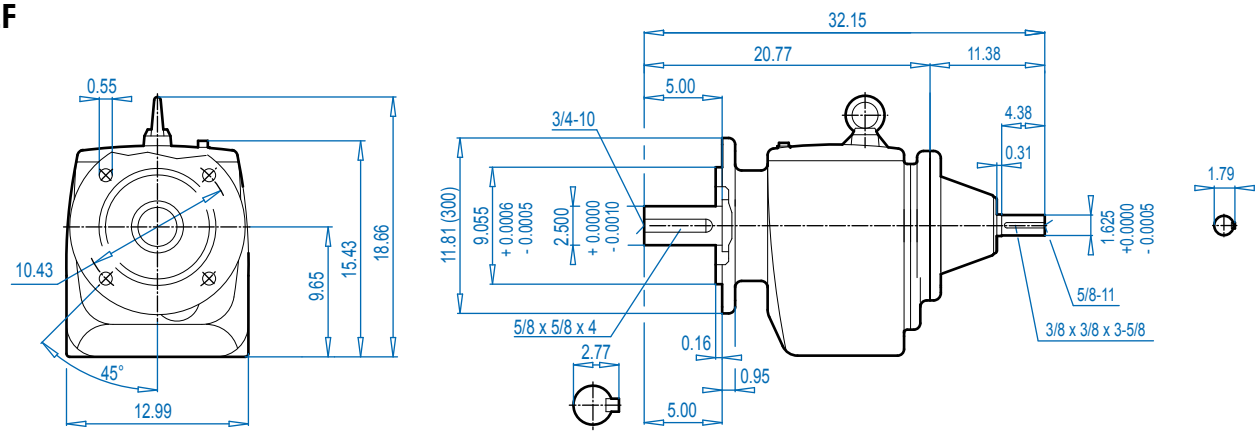

ALTERNATE SHAFTS SEE PAGE 239

Send Quote Requests to info@automatedpt.com
Call +1(800)985-6929 To Order or Order Online At Nordgearmotors.com

SK 63 + Motor
SK 63F + Motor

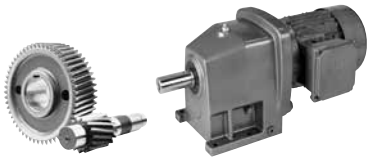

DRIVESYSTEMS

SK 63

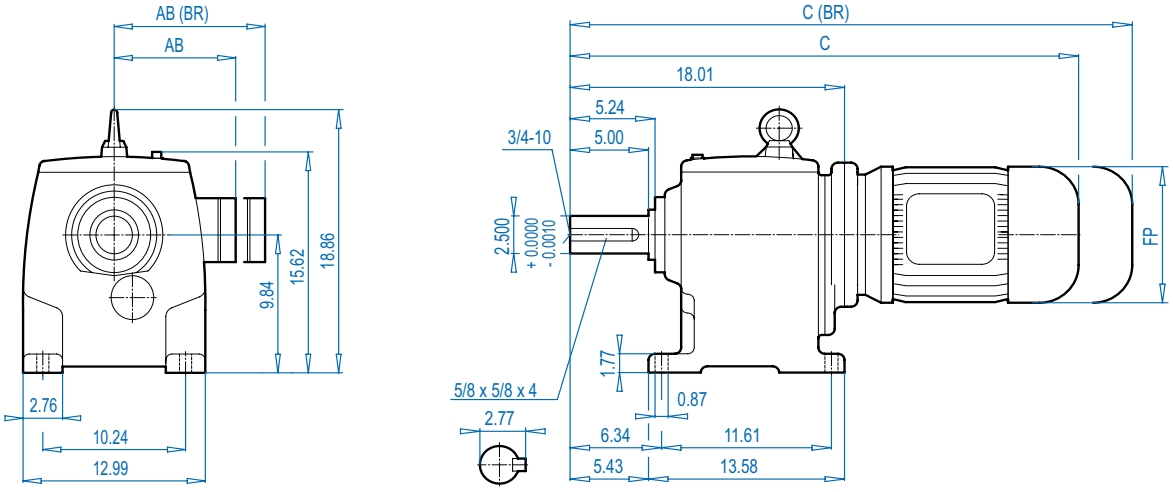

SK 63F

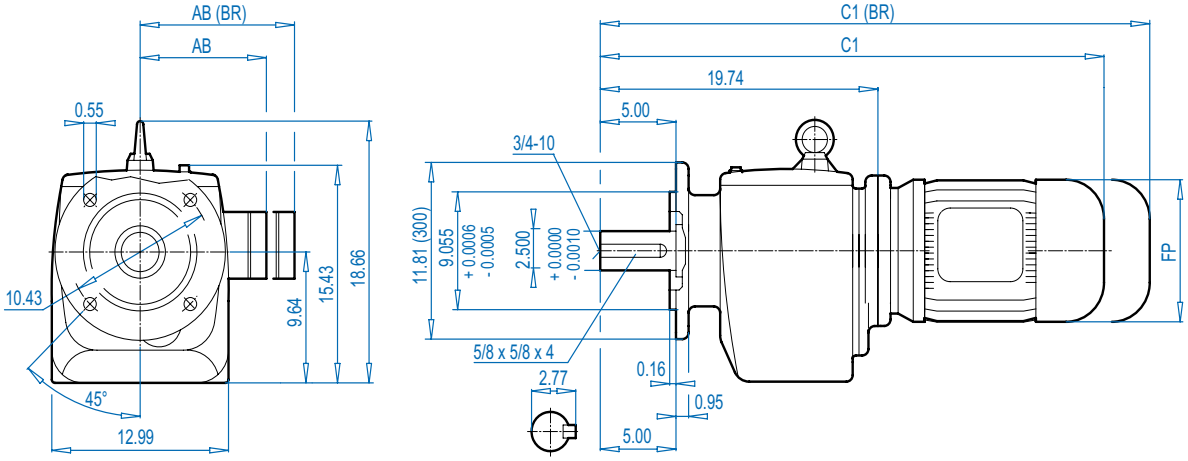

Motor Dimensions

Standard eff.	90S/L	100L	112M	132S/M	160M/L		180MX/LX		For Other Connection Possibilities please see ⇨🕮 237
Energy eff.	90SH/LH	100LH		132SH/MH	160MH	160LH		180MH/LH	
AB	5.79	6.65	7.05	8.03	8.90	8.90	8.90	10.20	
AB (BR)	5.83	6.26	6.69	7.72	8.90	8.90	8.90	10.20	
C	28.90	30.08	30.99	34.37	36.85	38.43	38.43	42.52	
C (BR)	31.85	33.67	34.65	38.59	43.43	45.16	45.16	46.66	
C1	30.63	31.81	32.72	36.10	38.58	40.16	40.16	44.25	
C1 (BR	33.58	35.39	36.38	38.58	45.16	46.89	46.89	48.39	
FP	6.92	7.63	8.58	10.16	12.60	12.60	12.60	14.09	



(BR) denotes Brakemotor

Send Quote Requests to info@automatedpt.com
Call +1(800)985-6929 To Order or Order Online At Nordgearmotors.com

DRIVESYSTEMS

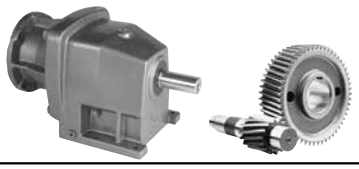

SK 63 + NEMA
SK 63F + NEMA

SK 63

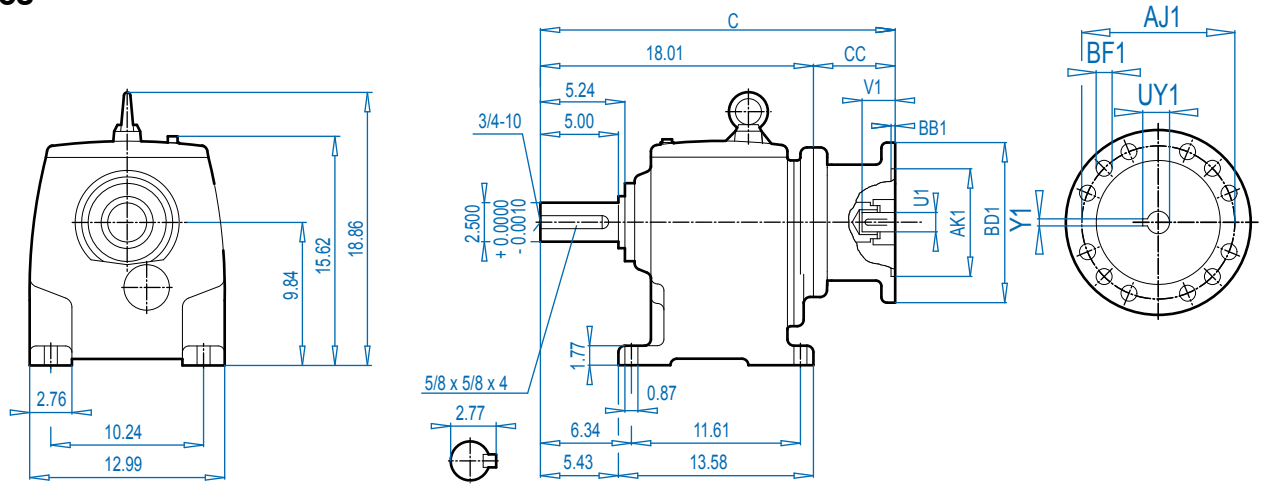

SK 63F

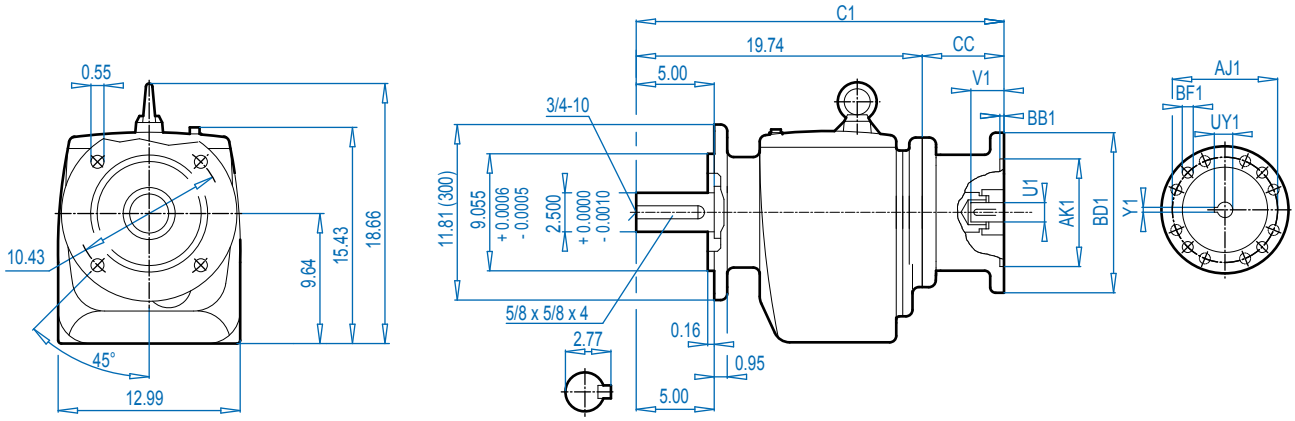

ALTERNATE SHAFTS SEE PAGE 239

NEMA Dimensions

Type	AJ1	AK1	BB1	BD1	BF1	U1	V1	UY1	Y1	C	C1	CC
56C	5.88	4.500	0.18	6.54	0.43	0.625	2.06	0.71	0.188	22.34	24.07	4.33
140TC	5.88	4.500	0.18	6.54	0.43	0.875	2.12	0.96	0.188	22.34	24.07	4.33
180TC	7.25	8.500	0.23	9.17	0.59	1.125	2.62	1.24	0.250	25.93	27.65	7.91
210TC	7.25	8.500	0.39	9.17	0.59	1.375	3.12	1.52	0.312	25.93	27.65	7.91
250TC	7.25	8.500	0.23	9.17	0.59	1.625	3.75	1.80	0.375	25.93	27.65	7.91
280TC	9.00	10.500	0.23	13.78	0.59	1.875	4.38	2.03	0.500	28.28	28.28	8.54

Send Quote Requests to info@automatedpt.com
Call +1(800)985-6929 To Order or Order Online At Nordgearmotors.com

Send Quote Requests to info@automatedpt.com
Call +1(800)985-6929 To Order or Order Online At Nordgearmotors.com

SK 63 - W
SK 63F - W

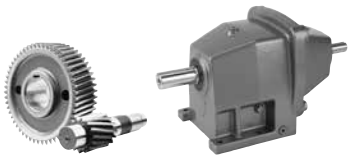

DRIVESYSTEMS

SK 63

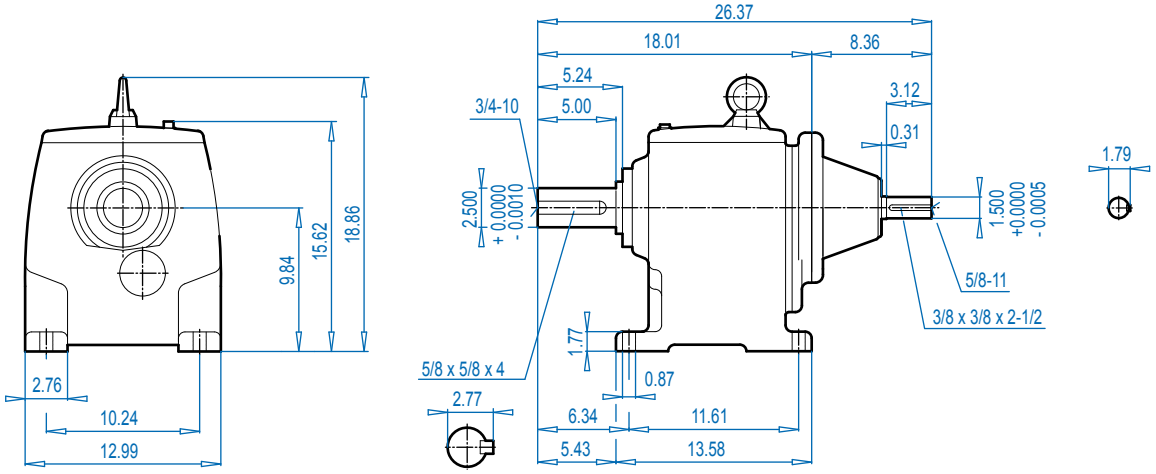

SK 63F

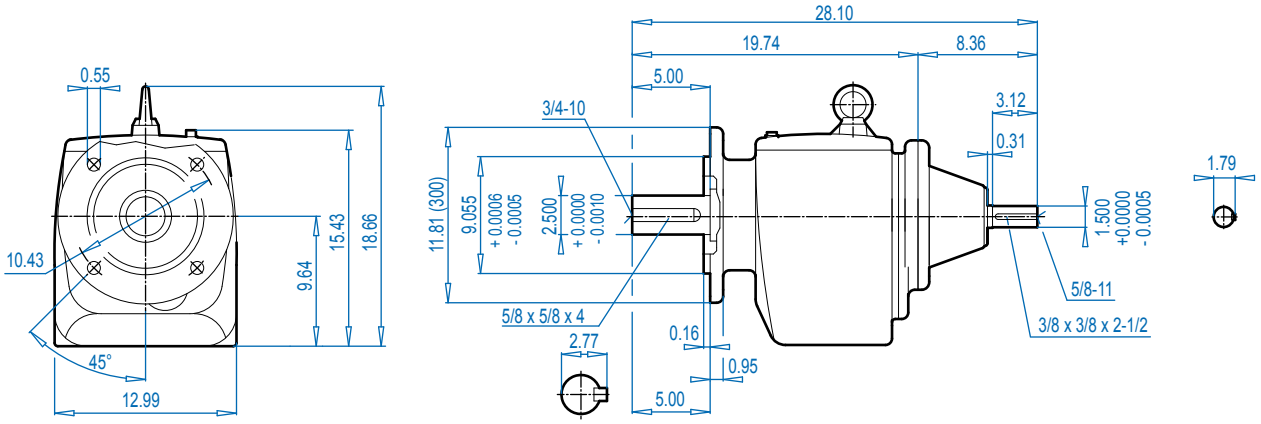

ALTERNATE SHAFTS SEE PAGE 239

Send Quote Requests to info@automatedpt.com
Call +1(800)985-6929 To Order or Order Online At Nordgearmotors.com

Send Quote Requests to info@automatedpt.com
Call +1(800)985-6929 To Order or Order Online At Nordgearmotors.com

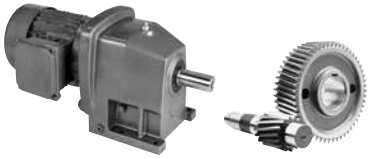

SK 72 + Motor
SK 72F + Motor

SK 72

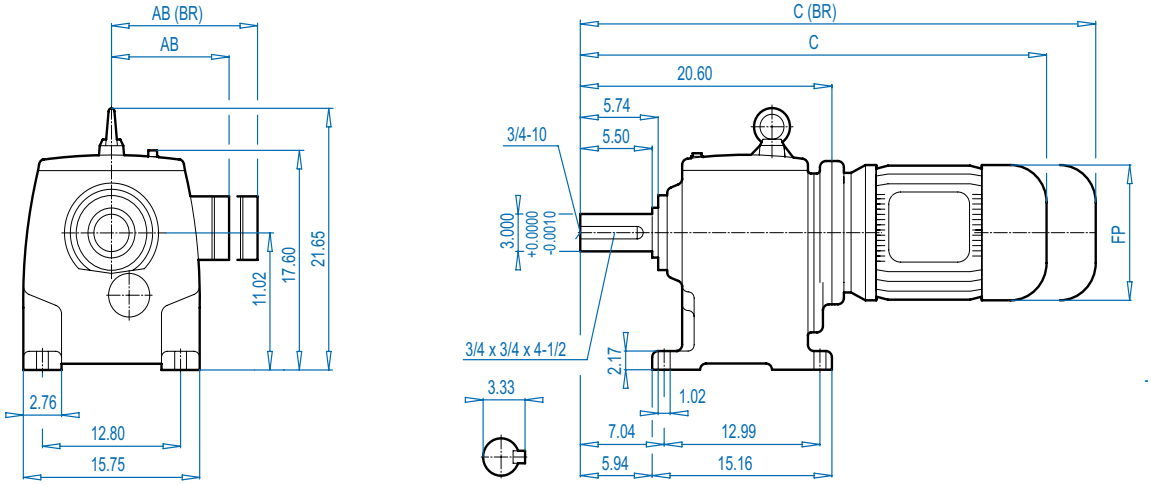

SK 72F

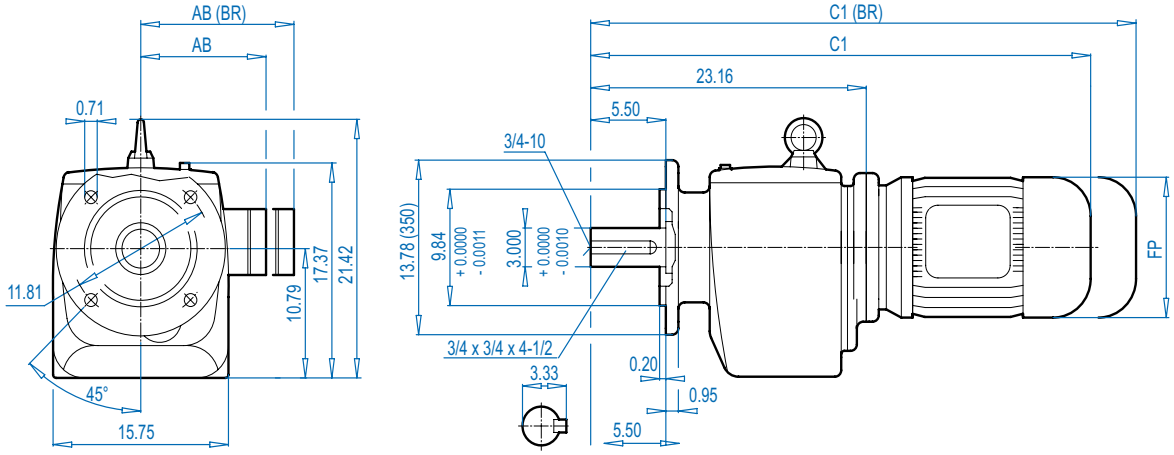

ALTERNATE SHAFTS SEE PAGE 239

Motor Dimensions

Standard efficiency	160M/L		180MX/LX		200L	225S/M		For Other Connection Possibilities please see ⇨🕮 237
Energy efficiency	160MH	160LH		180MH/LH	200LH		225SH/MH	
AB	8.90	8.90	8.90	10.20	12.05	12.05	12.80	
AB (BR)	8.90	8.90	8.90	10.20	12.05	12.05	-	
C	39.44	41.02	41.02	44.32	47.71	47.71	47.59	
C (BR)	46.02	47.75	47.75	48.46	54.28	54.28	-	
C1	42.00	43.57	43.57	46.88	50.27	50.27	50.15	
C1 (BR	48.57	50.30	50.30	51.01	56.84	56.84	-	
FP	12.60	12.60	12.60	14.09	15.67	15.67	17.52	

(BR) denotes Brakemotor

Send Quote Requests to info@automatedpt.com
Call +1(800)985-6929 To Order or Order Online At Nordgearmotors.com

Send Quote Requests to info@automatedpt.com
Call +1(800)985-6929 To Order or Order Online At Nordgearmotors.com

SK 72 + NEMA
SK 72F + NEMA

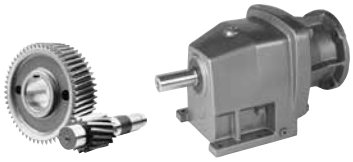

SK 72

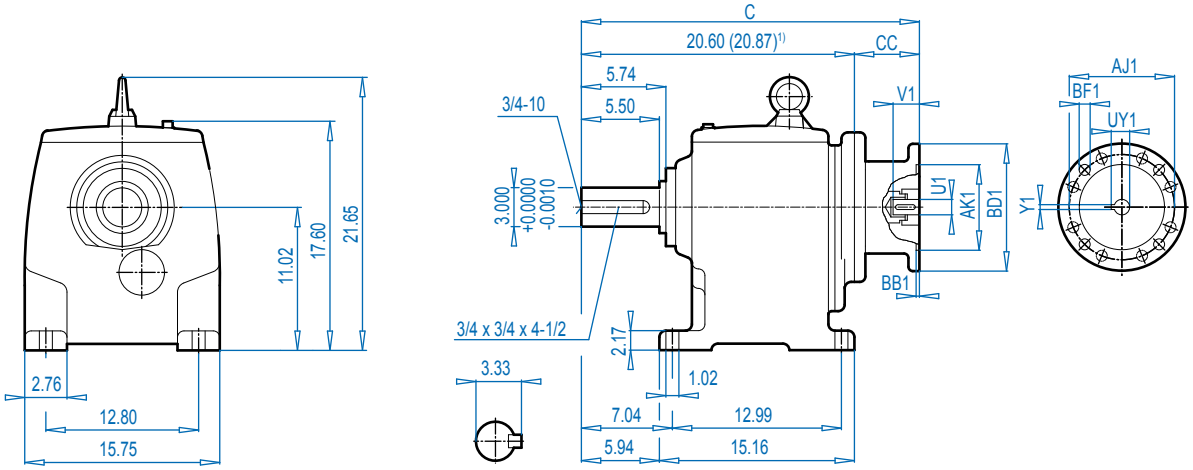

SK 72F

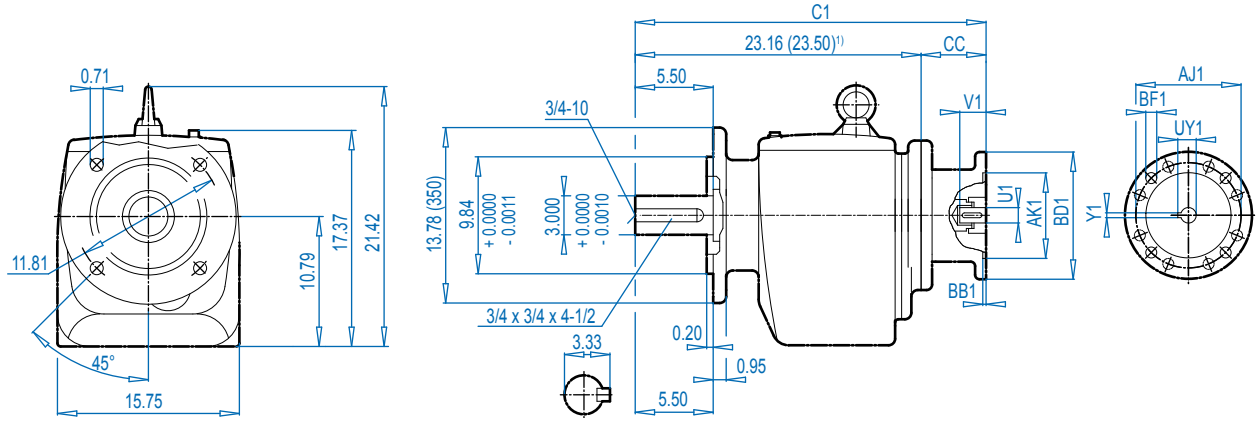

NEMA Dimensions

Type	AJ1	AK1	BB1	BD1	BF1	U1	V1	UY1	Y1	C	C1	CC
180TC	7.25	8.500	0.23	9.17	0.59	1.125	2.62	1.24	0.250	28.19	30.70	7.52
210TC	7.25	8.500	0.39	9.17	0.59	1.375	3.12	1.52	0.312	28.19	30.70	7.52
250TC	7.25	8.500	0.23	9.17	0.59	1.625	3.75	1.80	0.375	31.98	34.56	11.38
280TC	9.00	10.500	0.23	13.78	0.59	1.875	4.38	2.03	0.500	31.98	34.56	11.38
320TC	11.00	12.500	0.23	13.78	0.71	2.125	5.00	2.35	0.500	30.95	33.53	10.35
360TC1)	11.00	12.500	0.16	17.72	0.71	2.375	5.62	2.65	0.625	33.87	36.45	13.27

Send Quote Requests to info@automatedpt.com
Call +1(800)985-6929 To Order or Order Online At Nordgearmotors.com

Send Quote Requests to info@automatedpt.com
Call +1(800)985-6929 To Order or Order Online At Nordgearmotors.com

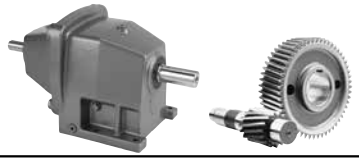

SK 72 - W
SK 72F - W

SK 72

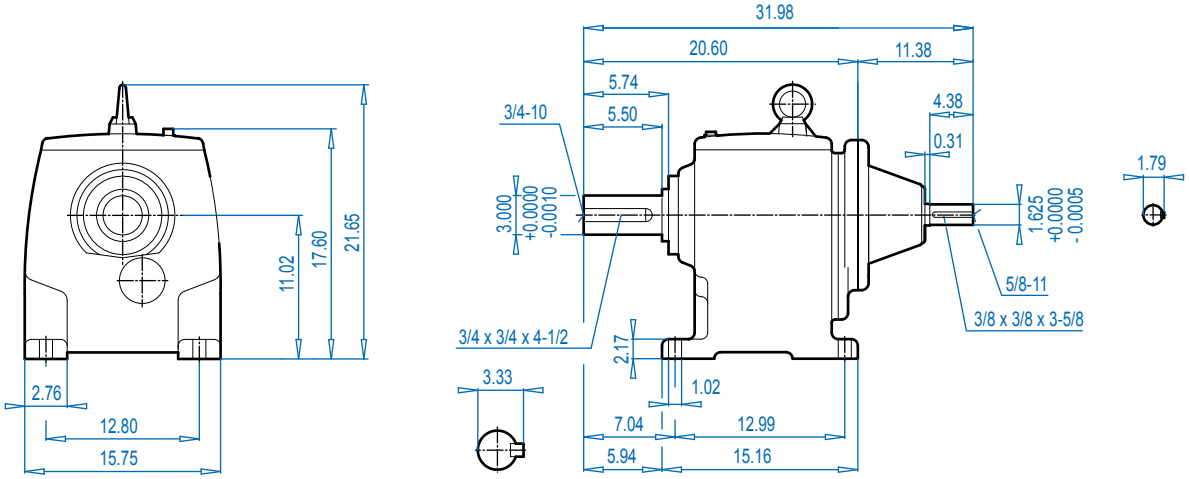

SK 72F

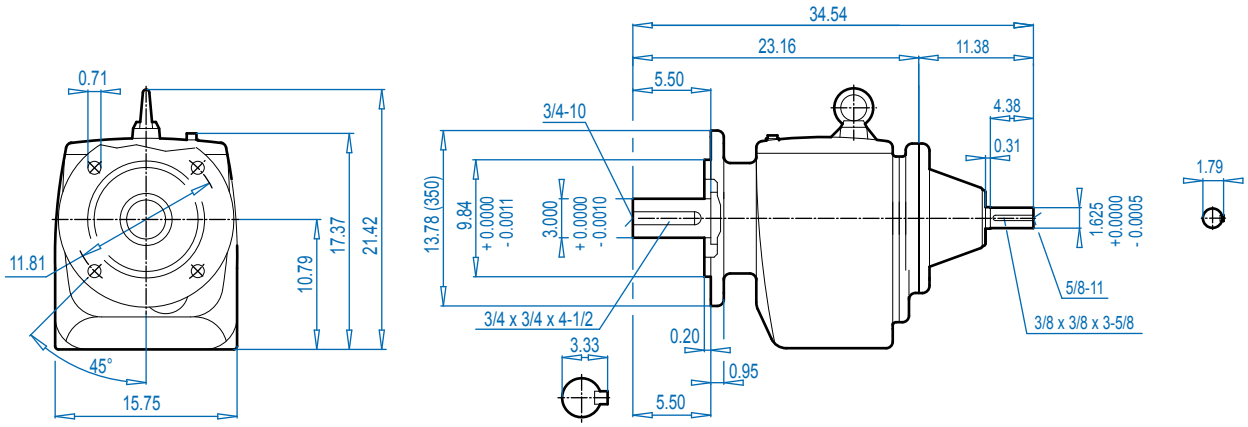

ALTERNATE SHAFTS SEE PAGE 239

Send Quote Requests to info@automatedpt.com
Call +1(800)985-6929 To Order or Order Online At Nordgearmotors.com

SK 73 + Motor
SK 73F + Motor

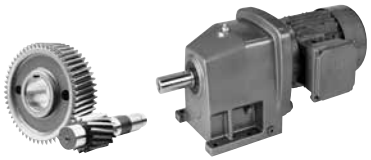

DRIVESYSTEMS

SK 73

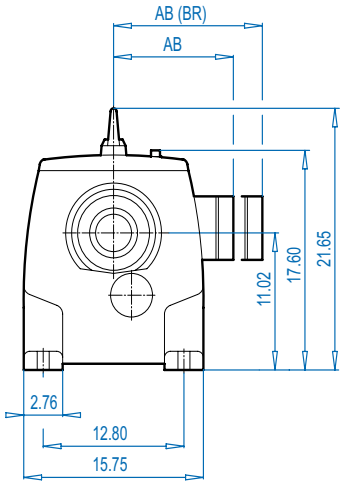

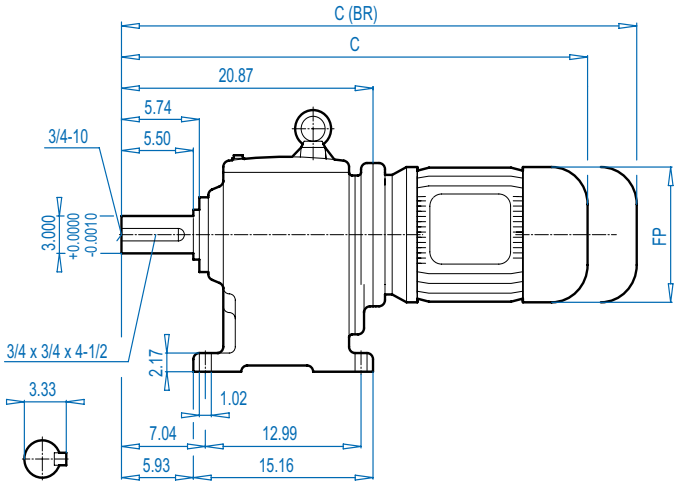

SK 73F

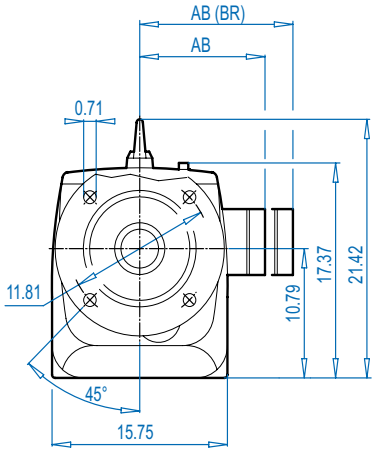

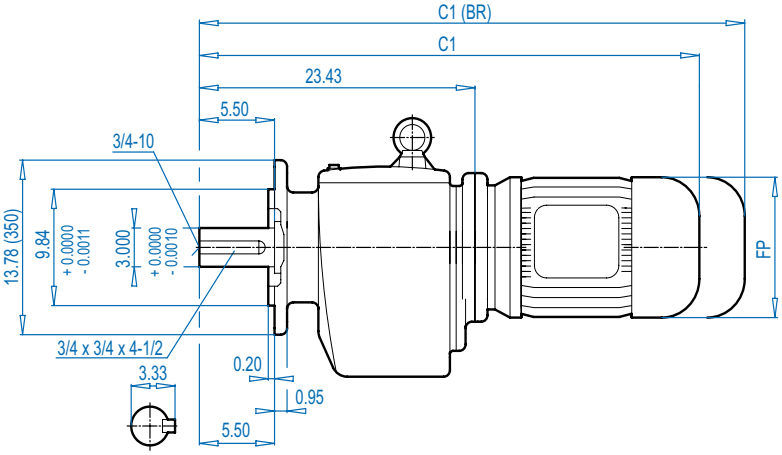

Motor Dimensions

Standard eff.	100L		132S/M	160M/L		180MX/LX		200L	225S/M		For Other Connection Possibilities please see ⇨📖 237
Energy eff.	100LH	112MH	132SH/MH	160MH	160LH		180MH/LH	200LH		225SH/MH	
AB	6.65	7.05	8.03	8.90	8.90	8.90	10.20	12.05	12.05	12.80	
AB (BR)	6.26	6.69	7.72	8.90	8.90	8.90	10.20	12.05	12.05	-	
C	30.08	31.05	34.37	36.85	38.43	38.43	42.52	47.98	47.98	47.86	
C (BR)	33.67	34.64	38.59	43.43	45.16	45.16	46.66	54.56	54.56	-	
C1	35.50	36.29	40.58	42.27	43.85	43.85	47.15	50.54	50.54	50.42	
C1 (BR)	39.08	39.95	44.79	48.85	50.58	50.58	51.29	57.11	57.11	-	
FP	7.63	8.58	10.16	12.60	12.60	12.60	14.09	15.67	15.67	17.52	



(BR) denotes Brakemotor

Send Quote Requests to info@automatedpt.com
Call +1(800)985-6929 To Order or Order Online At Nordgearmotors.com

Send Quote Requests to info@automatedpt.com
Call +1(800)985-6929 To Order or Order Online At Nordgearmotors.com

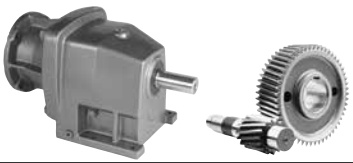

SK 73 + NEMA
SK 73F + NEMA

SK 73

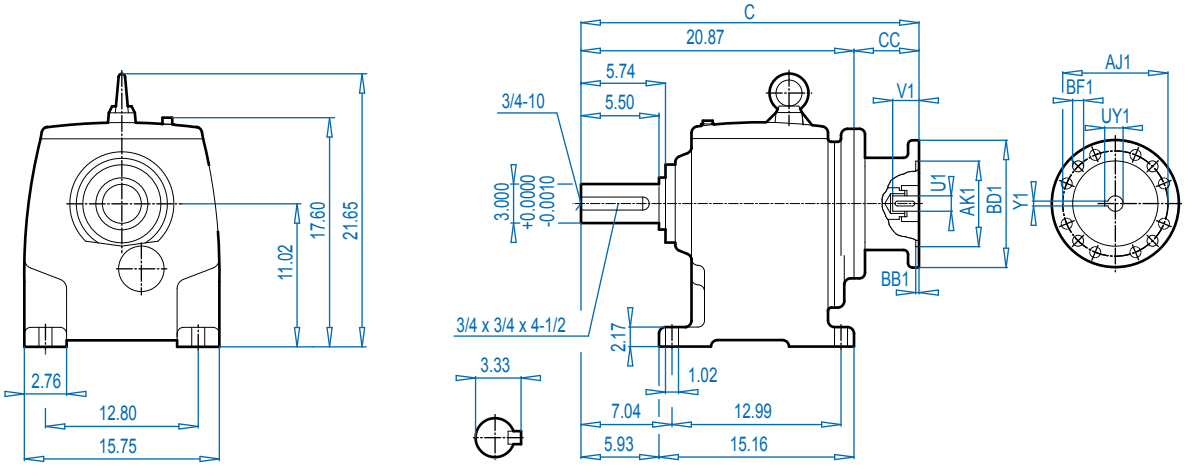

SK 73F

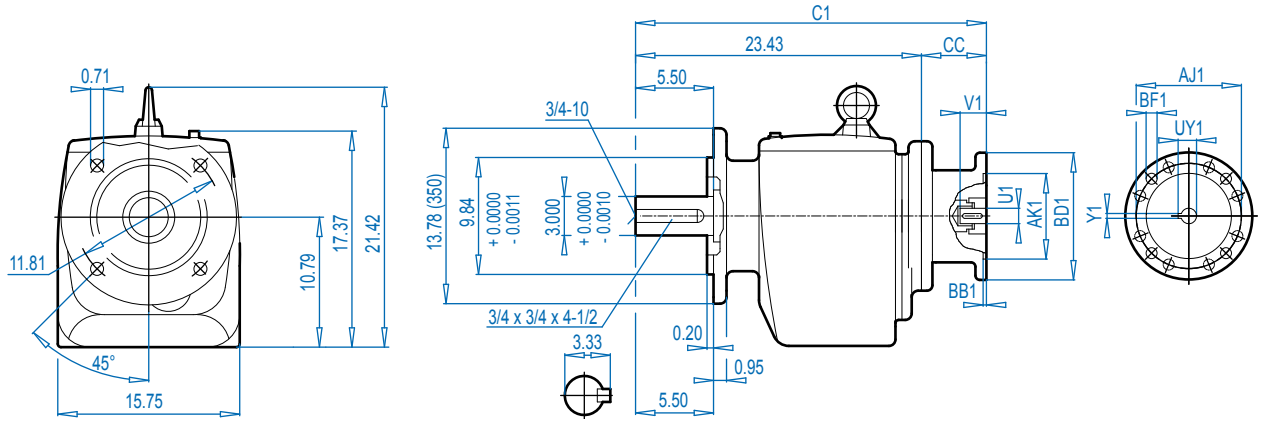

ALTERNATE SHAFTS SEE PAGE 239

NEMA Dimensions

Type	AJ1	AK1	BB1	BD1	BF1	U1	V1	UY1	Y1	C	C1	CC
180TC	7.25	8.500	0.23	9.17	0.59	1.125	2.62	1.24	0.250	28.39	30.95	7.52
210TC	7.25	8.500	0.39	9.17	0.59	1.375	3.12	1.52	0.312	28.39	30.95	7.52
250TC	7.25	8.500	0.23	9.17	0.59	1.625	3.75	1.80	0.375	32.25	34.81	11.38
280TC	9.00	10.500	0.23	13.78	0.59	1.875	4.38	2.03	0.500	32.25	34.81	11.38
320TC	11.00	12.500	0.23	13.78	0.71	2.125	5.00	2.35	0.500	31.23	33.78	10.35
360TC	11.00	12.500	0.16	17.72	0.71	2.375	5.62	2.65	0.625	34.14	36.70	13.27

Send Quote Requests to info@automatedpt.com
Call +1(800)985-6929 To Order or Order Online At Nordgearmotors.com

Send Quote Requests to info@automatedpt.com
Call +1(800)985-6929 To Order or Order Online At Nordgearmotors.com

SK 73 - W
SK 73F - W

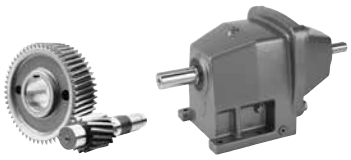

DRIVESYSTEMS

SK 73

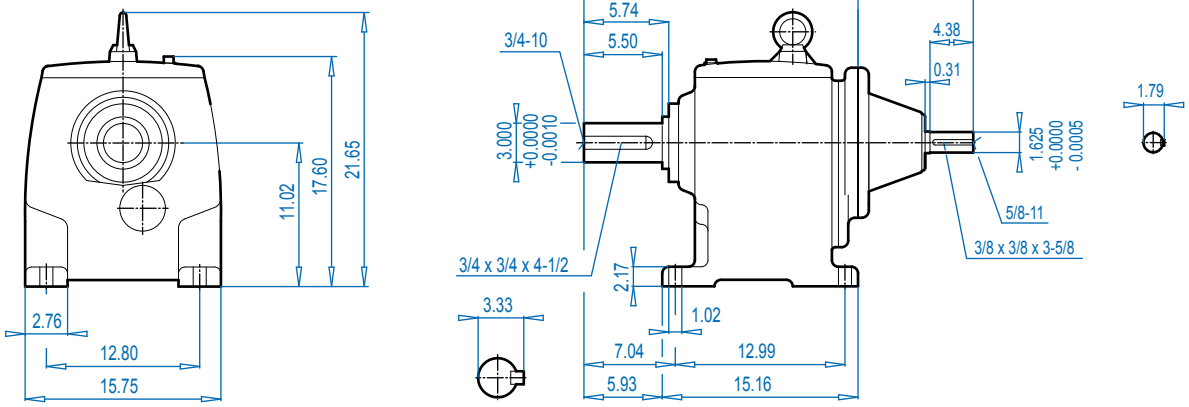

SK 73F

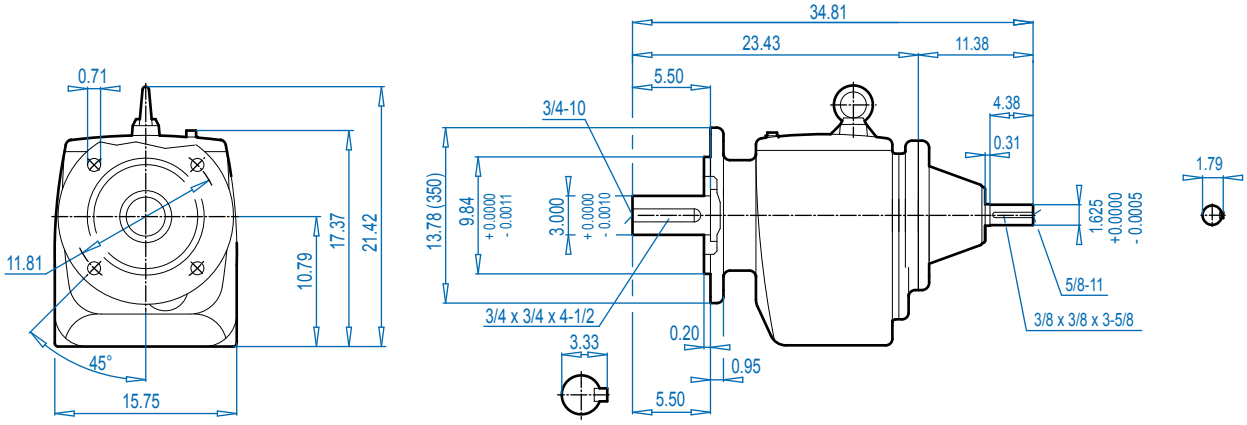

ALTERNATE SHAFTS SEE PAGE 239

Send Quote Requests to info@automatedpt.com
Call +1(800)985-6929 To Order or Order Online At Nordgearmotors.com

Send Quote Requests to info@automatedpt.com
Call +1(800)985-6929 To Order or Order Online At Nordgearmotors.com

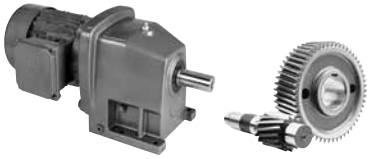

SK 82 + Motor
SK 82F + Motor

SK 82

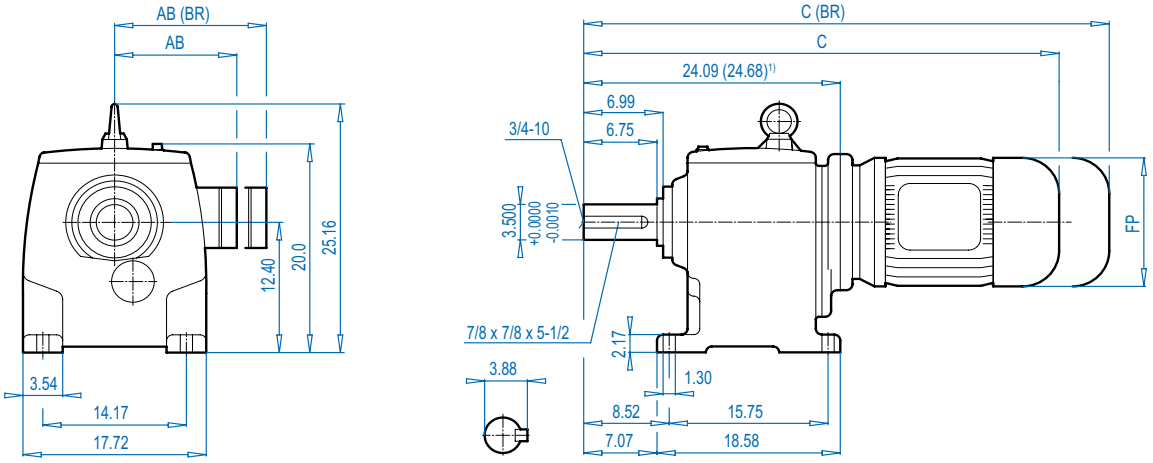

SK 82F

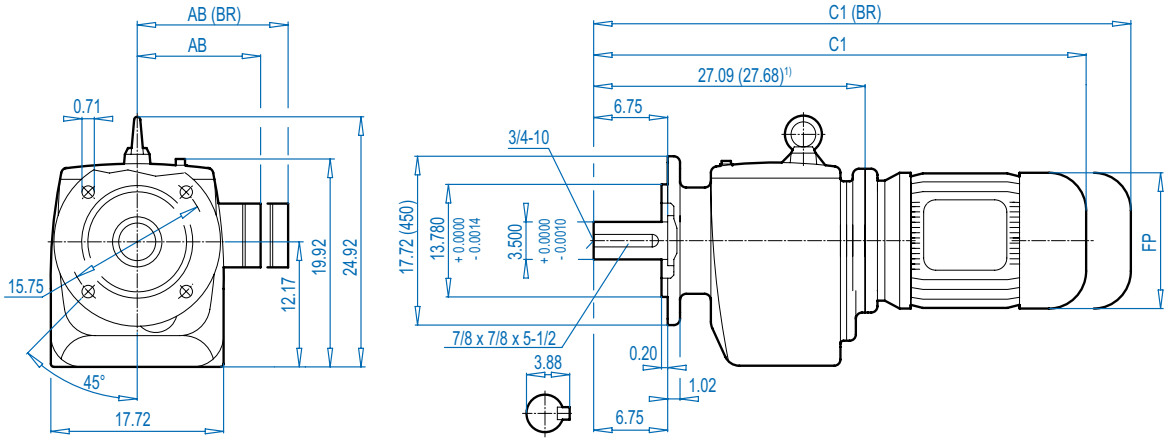

ALTERNATE SHAFTS SEE PAGE 239

Motor Dimensions

Standard eff.	160M/L		200L	225S/M		250M1)		280S1)	For Other Connection Possibilities please see ⇨📖 237
Energy eff.	160MH	160LH	200LH		225SH/MH		250MH1)	280SH1)	
AB	8.90	8.90	12.05	12.05	12.80	15.43	15.43	17.91	
AB (BR)	8.90	8.90	12.05	12.05	-	15.43	15.43	17.91	
C	42.90	44.47	51.17	51.17	51.05	54.63	57.39	58.77	
C (BR)	49.47	51.20	57.74	57.74	-	62.90	65.65	69.99	
C1	45.88	47.46	54.15	54.15	54.03	57.61	60.37	61.75	
C1 (BR)	52.46	54.19	60.73	60.73	-	65.88	68.63	72.97	
FP	12.60	12.60	15.67	15.67	17.52	19.49	19.49	22.64	

(BR) denotes Brakemotor

Send Quote Requests to info@automatedpt.com
Call +1(800)985-6929 To Order or Order Online At Nordgearmotors.com

SK 82 + NEMA
SK 82F + NEMA

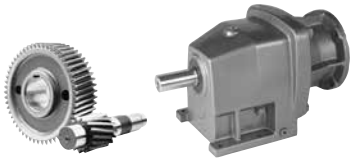

SK 82

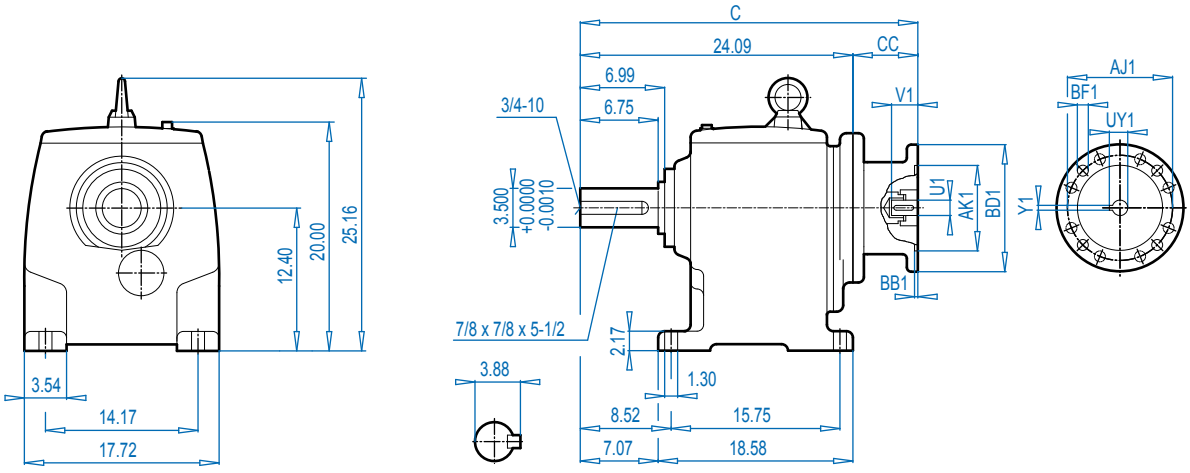

SK 82F

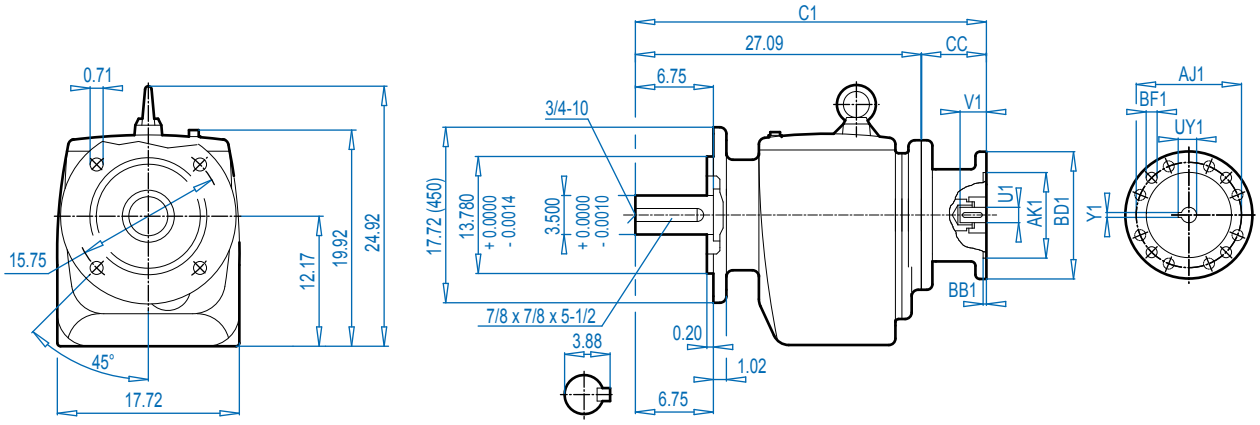

NEMA Dimensions

Type	AJ1	AK1	BB1	BD1	BF1	U1	V1	UY1	Y1	C	C1	CC
180TC	7.25	8.500	0.23	9.17	0.59	1.125	2.62	1.24	0.250	31.61	34.58	7.52
210TC	7.25	8.500	0.39	9.17	0.59	1.375	3.12	1.52	0.312	31.61	34.58	7.52
250TC	7.25	8.500	0.23	9.17	0.59	1.625	3.75	1.80	0.375	35.47	38.44	11.38
280TC	9.00	10.500	0.23	13.78	0.59	1.875	4.38	2.03	0.500	35.47	38.44	11.38
320TC	11.00	12.500	0.23	13.78	0.71	2.125	5.00	2.35	0.500	34.45	37.41	10.35
360TC	11.00	12.500	0.16	21.65	0.71	2.375	5.62	2.65	0.625	37.97	40.35	13.29

Send Quote Requests to info@automatedpt.com
Call +1(800)985-6929 To Order or Order Online At Nordgearmotors.com

DRIVESYSTEMS

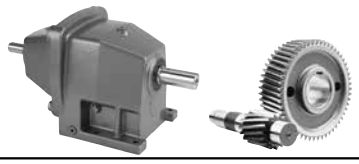

SK 82 - W
SK 82F - W

SK 82

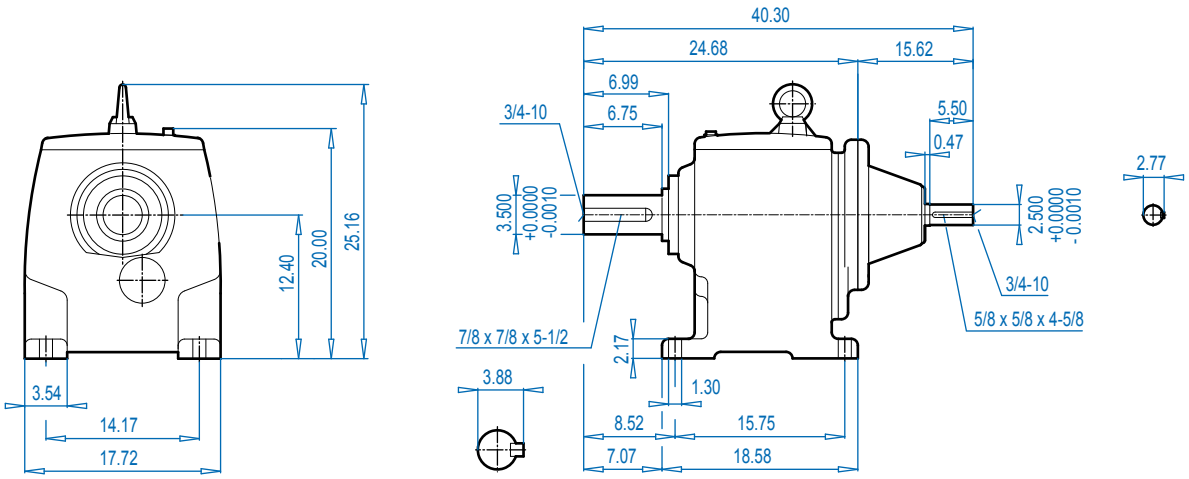

SK 82F

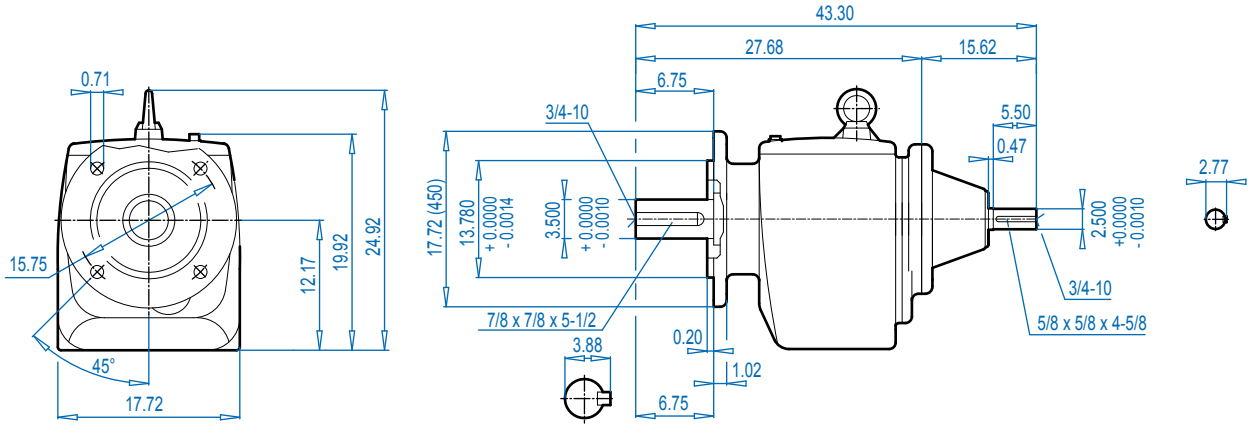

ALTERNATE SHAFTS SEE PAGE 239

Send Quote Requests to info@automatedpt.com
Call +1(800)985-6929 To Order or Order Online At Nordgearmotors.com

SK 83 + Motor
SK 83F + Motor

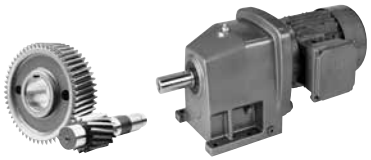

DRIVESYSTEMS

SK 83

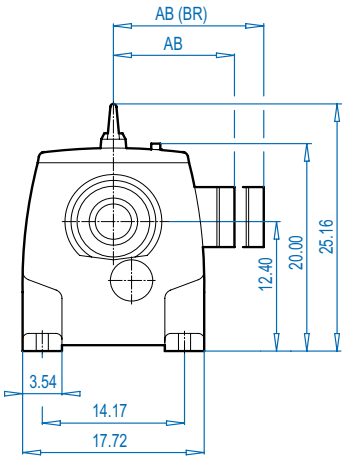

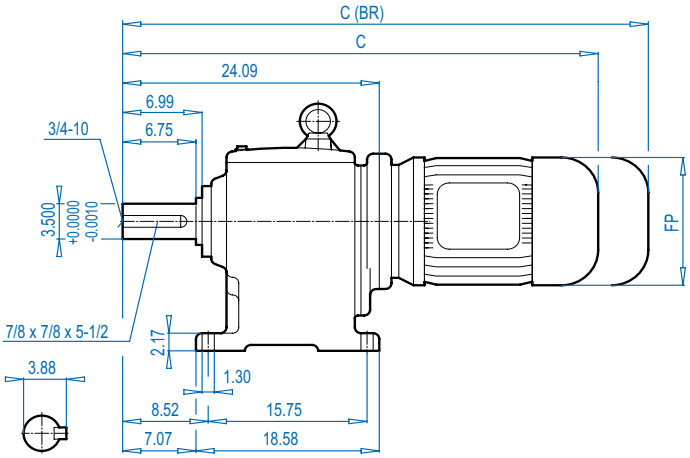

SK 83F

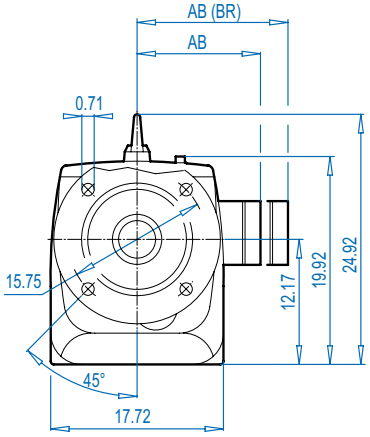

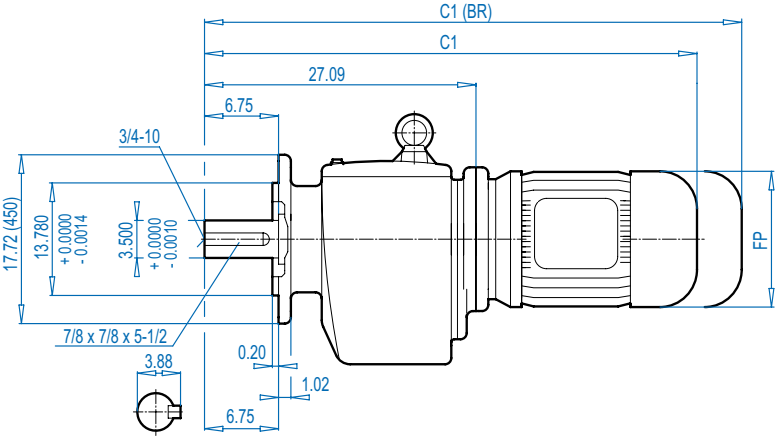

Motor Dimensions

Standard eff.	100 L	112 M		132 S/M	160 M/L		180 MX/LX		200 L	225 S/M		For Other Connection Possibilities please see ⇨🕮 237
Energy eff.	100 LH		112 MH	132 SH/MH	160 MH	160 LH		180 MH/LH	200 LH		225 SH/MH	
AB	6.65	7.05	7.05	8.03	8.90	8.90	8.90	10.20	12.05	12.05	12.80	
AB (BR)	6.26	6.69	6.69	7.72	8.90	8.90	8.90	10.20	12.05	12.05	-	
C	36.16	36.95	37.92	41.24	42.93	44.51	44.51	47.82	51.21	51.21	51.09	
C (BR)	39.75	40.61	41.58	45.45	49.51	51.24	51.24	51.95	57.78	57.78	-	
C1	39.15	39.94	40.91	44.23	45.92	47.50	47.50	50.81	54.19	54.19	54.07	
C1 (BR)	42.73	43.60	44.57	48.44	52.50	54.23	54.23	54.94	60.77	60.77	-	
FP	7.91	8.98	8.98	10.47	12.60	12.60	12.60	14.09	15.67	15.67	17.52	



(BR) denotes Brakemotor

Send Quote Requests to info@automatedpt.com
Call +1(800)985-6929 To Order or Order Online At Nordgearmotors.com

DRIVESYSTEMS

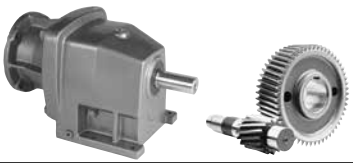

SK 83 + NEMA
SK 83F + NEMA

SK 83

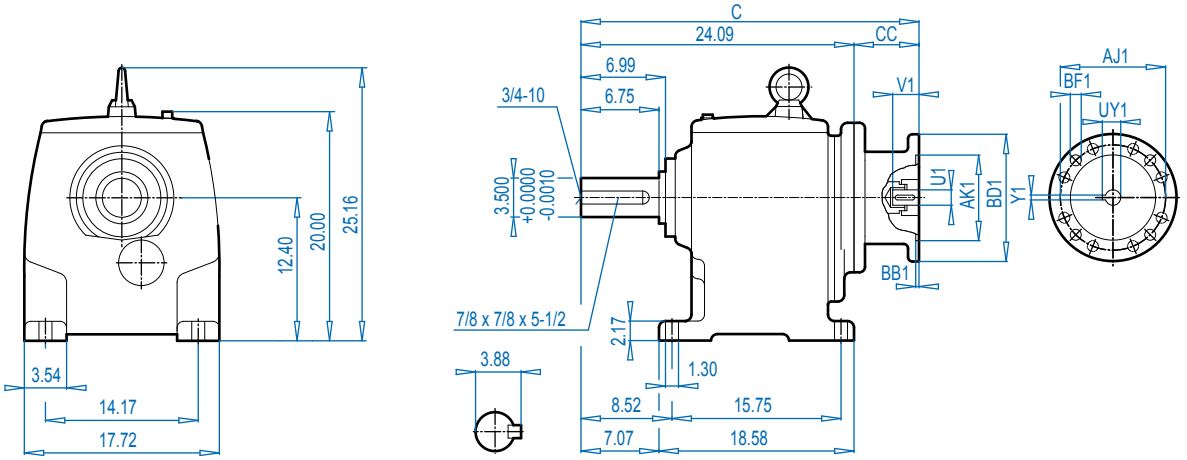

SK 83F

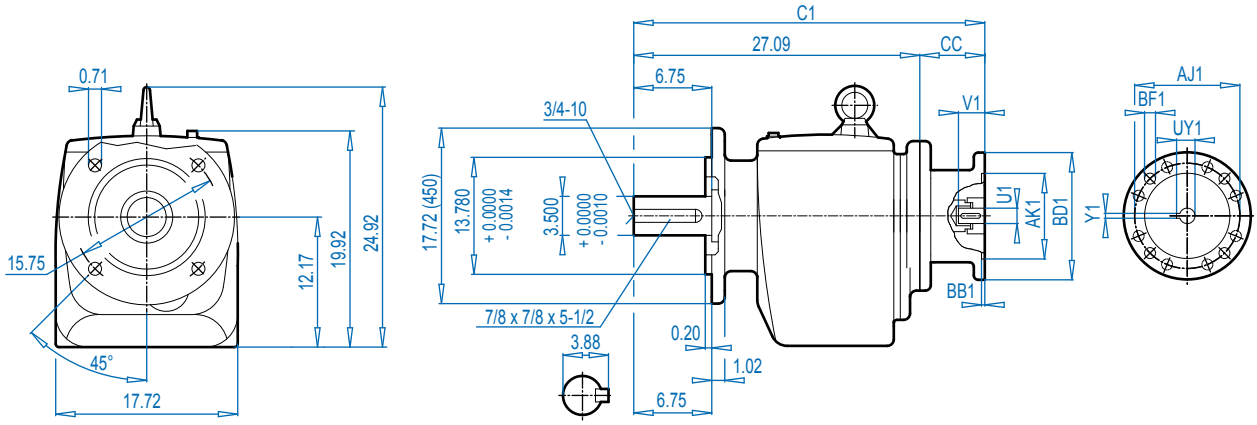

ALTERNATE SHAFTS SEE PAGE 239

NEMA Dimensions

Type	AJ1	AK1	BB1	BD1	BF1	U1	V1	UY1	Y1	C	C1	CC
180TC	7.25	8.500	0.23	9.17	0.59	1.125	2.62	1.24	0.250	31.61	34.61	7.52
210TC	7.25	8.500	0.39	9.17	0.59	1.375	3.12	1.52	0.312	31.61	34.61	7.52
250TC	7.25	8.500	0.23	9.17	0.59	1.625	3.75	1.80	0.375	35.47	38.47	11.38
280TC	9.00	10.500	0.23	13.78	0.59	1.875	4.38	2.03	0.500	35.47	38.47	11.38
320TC	11.00	12.500	0.23	13.78	0.71	2.125	5.00	2.35	0.500	34.45	37.45	10.35
360TC	11.00	12.500	0.16	17.72	0.71	2.375	5.62	2.65	0.625	37.36	40.36	13.27

Send Quote Requests to info@automatedpt.com
Call +1(800)985-6929 To Order or Order Online At Nordgearmotors.com

SK 83 - W
SK 83F - W

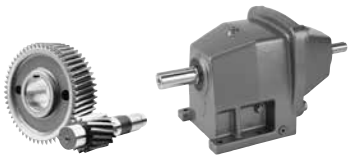

DRIVESYSTEMS

SK 83

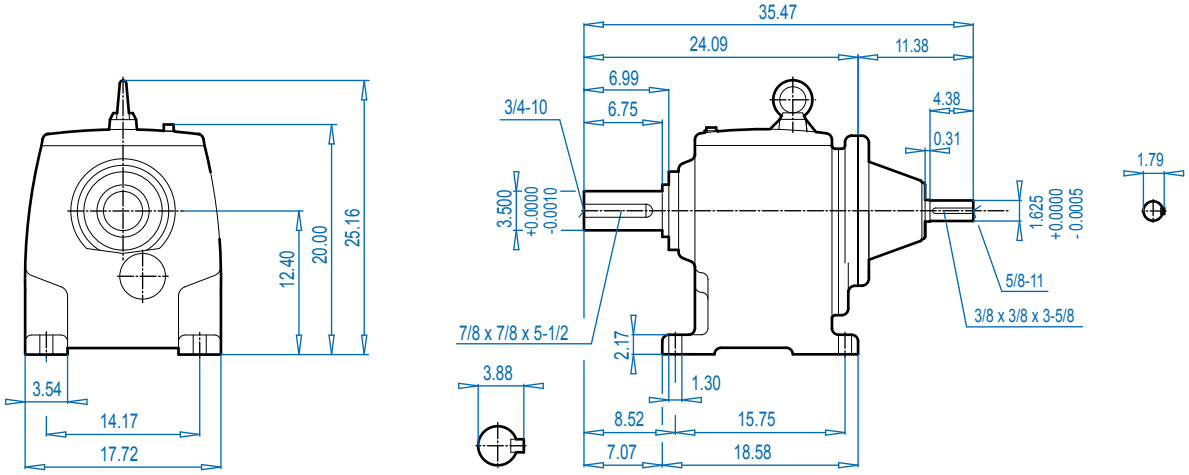

SK 83F

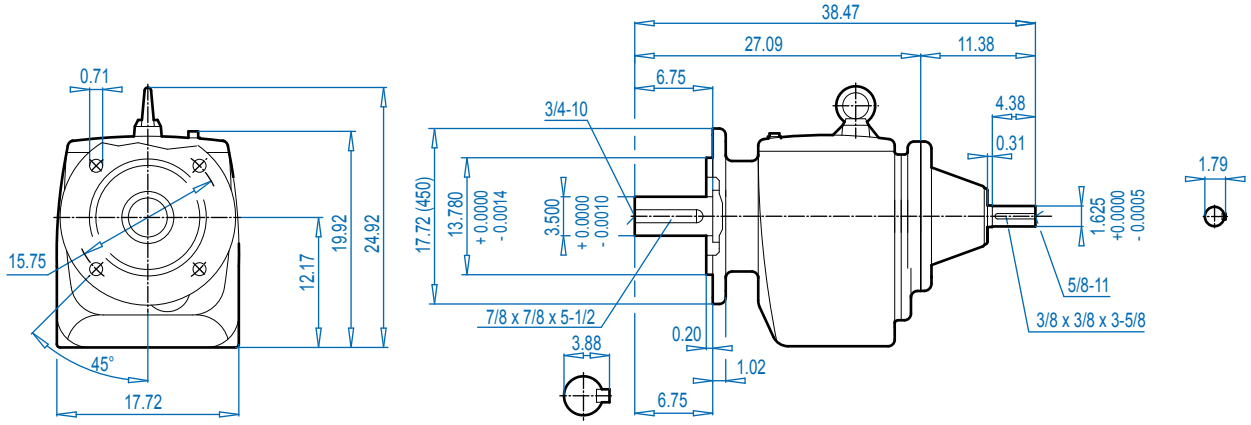

Send Quote Requests to info@automatedpt.com
Call +1(800)985-6929 To Order or Order Online At Nordgearmotors.com

Send Quote Requests to info@automatedpt.com
Call +1(800)985-6929 To Order or Order Online At Nordgearmotors.com

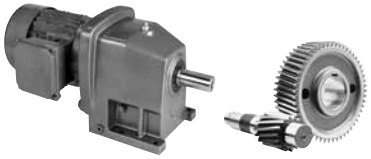

SK 92 + Motor
SK 92F + Motor

SK 92

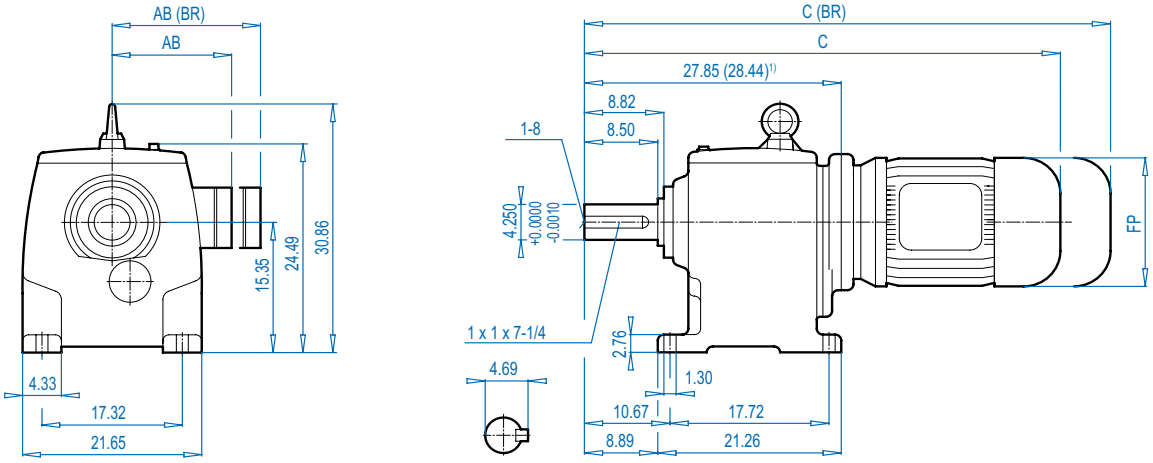

SK 92F

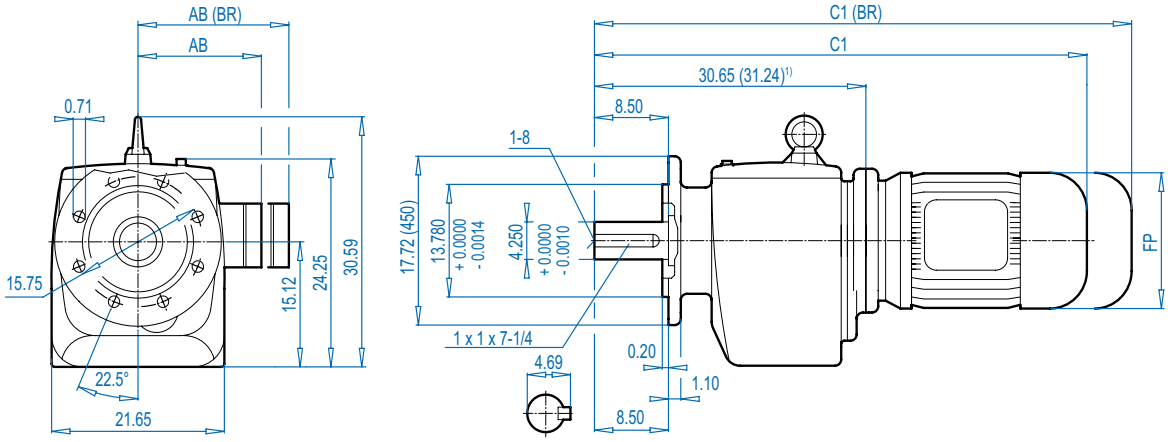

ALTERNATE SHAFTS SEE PAGE 239

Motor Dimensions

Standard eff.	225 S/M		250 M1)		280 S1)	280 M1)		315 S1)	315 Ma1)	For Other Connection Possibilities please see ⇨ 237
Energy eff.		225 SH/MH		250 MH1)	280 SH1)		280 MH1)	315 SH1)	315 MHa1)	
AB	12.05	12.80	15.43	15.43	17.01	17.01	17.01	20.28	20.28	
AB (BR)	12.05	-	15.43	15.43	17.01	17.01	17.01	-	-	
C	36.16	54.96	58.43	61.10	62.48	60.70	65.03	66.61	72.12	
C (BR)	39.75	-	66.61	69.36	73.70	71.73	75.66	-	-	
C1	57.76	57.64	61.14	63.90	65.28	63.50	67.83	69.41	74.92	
C1 (BR)	64.33	-	69.41	72.16	76.50	74.13	78.46	-	-	
FP	15.67	17.52	19.49	19.49	22.64	21.85	21.85	25.39	25.39	



(BR) denotes Brakemotor 1) This motor type increases overall dimension length

Send Quote Requests to info@automatedpt.com
Call +1(800)985-6929 To Order or Order Online At Nordgearmotors.com

SK 92 + NEMA
SK 92F + NEMA

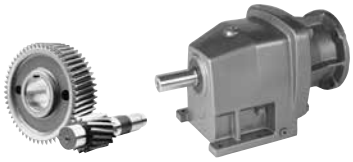

SK 92

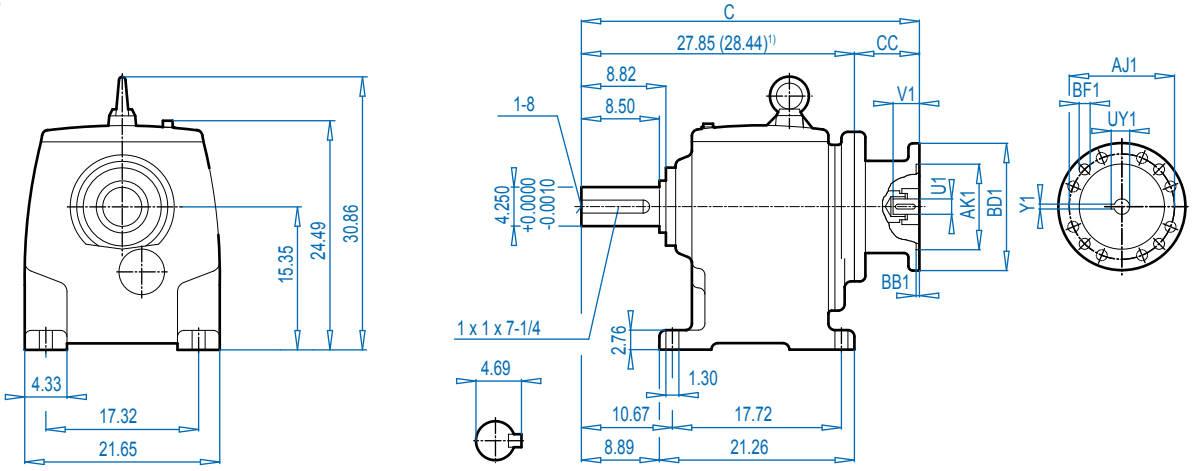

SK 92F

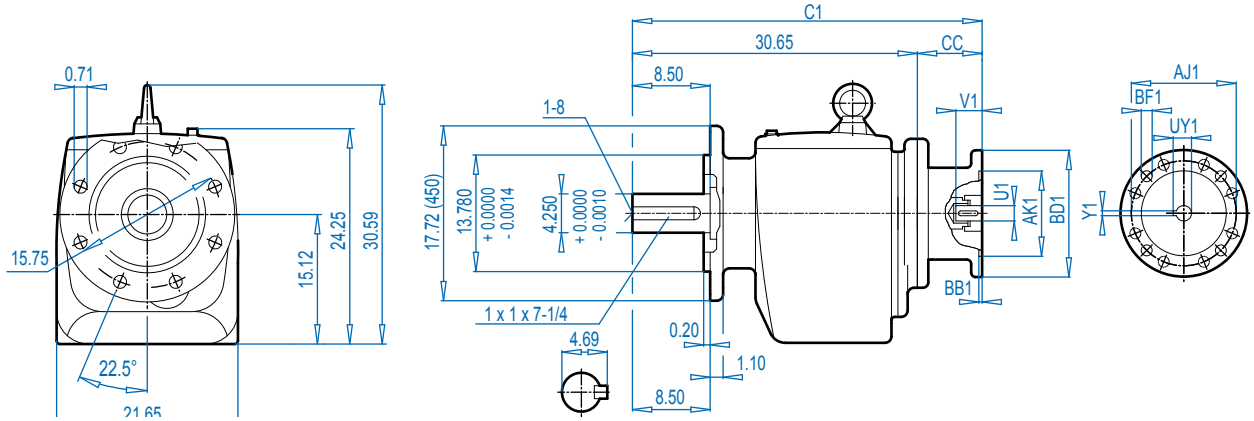

NEMA Dimensions

Type	AJ1	AK1	BB1	BD1	BF1	U1	V1	UY1	Y1	C	C1	CC
180TC	7.25	8.500	0.23	9.17	0.59	1.125	2.62	1.24	0.250	35.37	38.19	7.52
210TC	7.25	8.500	0.39	9.17	0.59	1.375	3.12	1.52	0.312	35.37	38.19	7.52
250TC	7.25	8.500	0.23	9.17	0.59	1.625	3.75	1.80	0.375	39.23	42.05	11.38
280TC1)	9.00	10.500	0.23	13.78	0.59	1.875	4.38	2.03	0.500	39.82	42.05	11.38
320TC1)	11.00	12.500	0.23	13.78	0.71	2.125	5.00	2.35	0.500	38.80	41.02	10.35
360TC1)	11.00	12.500	0.16	21.65	0.71	2.375	5.62	2.65	0.625	41.73	43.96	13.29

Send Quote Requests to info@automatedpt.com
Call +1(800)985-6929 To Order or Order Online At Nordgearmotors.com

Send Quote Requests to info@automatedpt.com
Call +1(800)985-6929 To Order or Order Online At Nordgearmotors.com

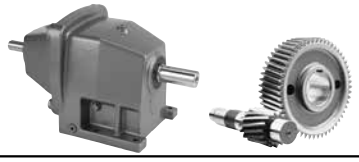

SK 92 - W
SK 92F - W

SK 92

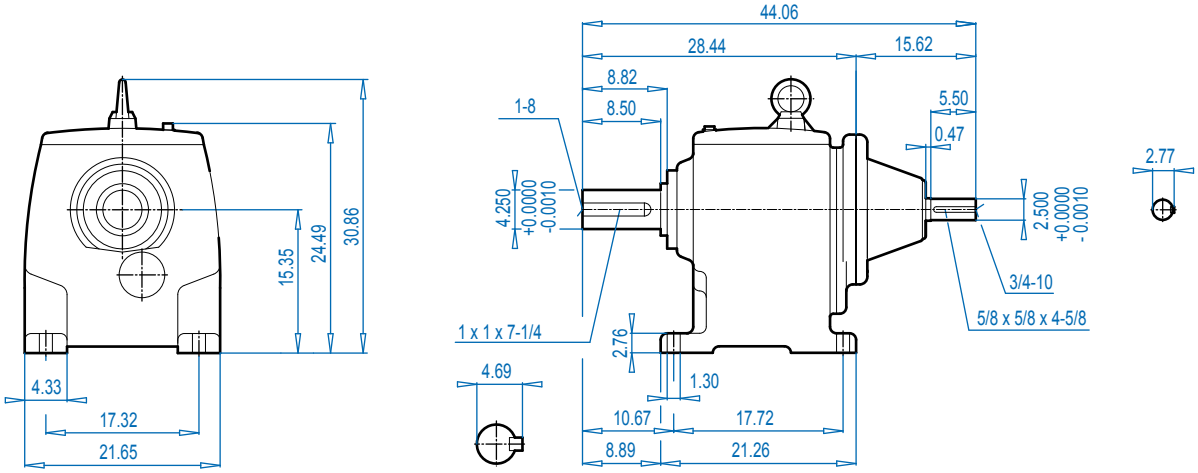

SK 92F

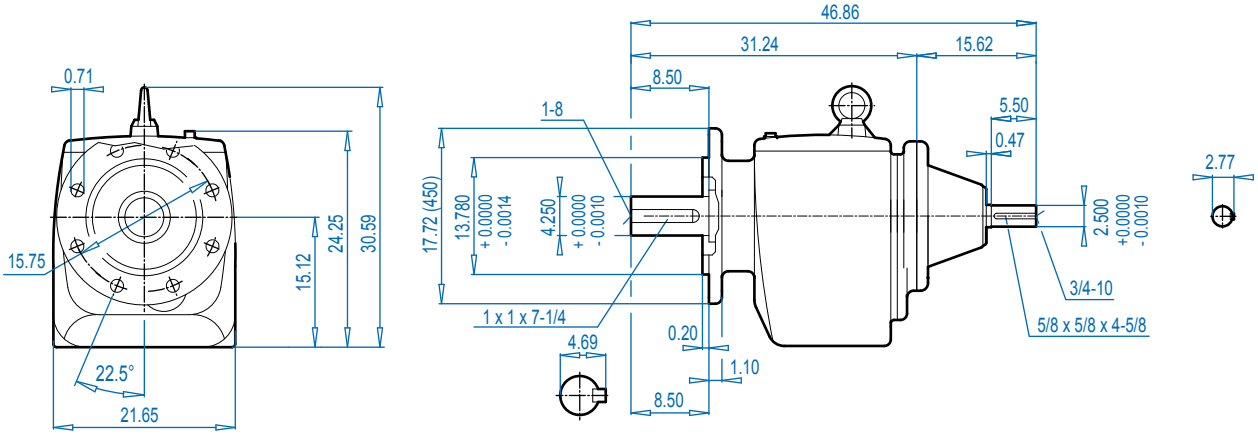

ALTERNATE SHAFTS SEE PAGE 239

Send Quote Requests to info@automatedpt.com
Call +1(800)985-6929 To Order or Order Online At Nordgearmotors.com

SK 93 + Motor
SK 93F + Motor

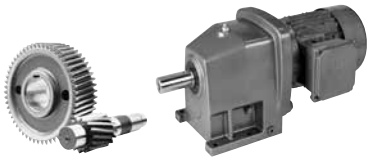

DRIVESYSTEMS

SK 93

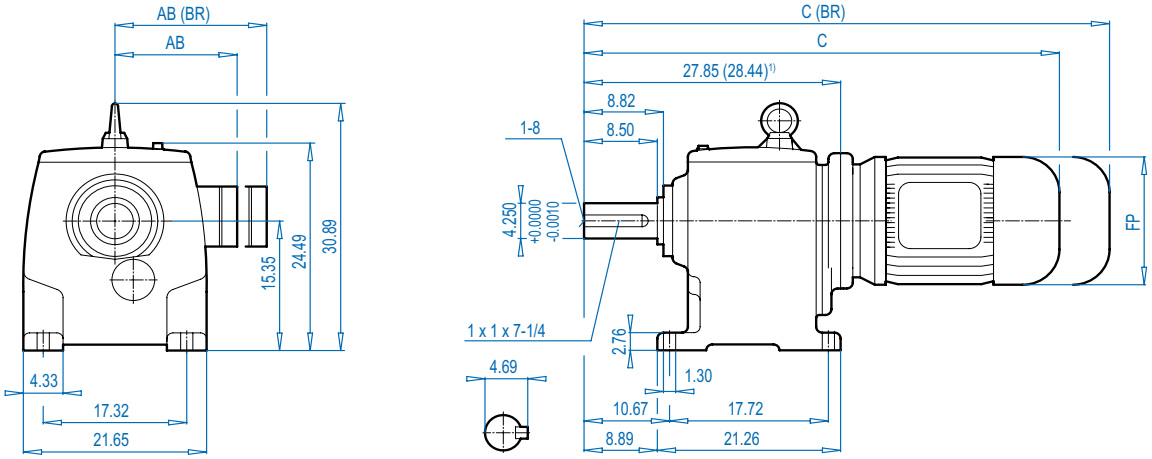

SK 93F

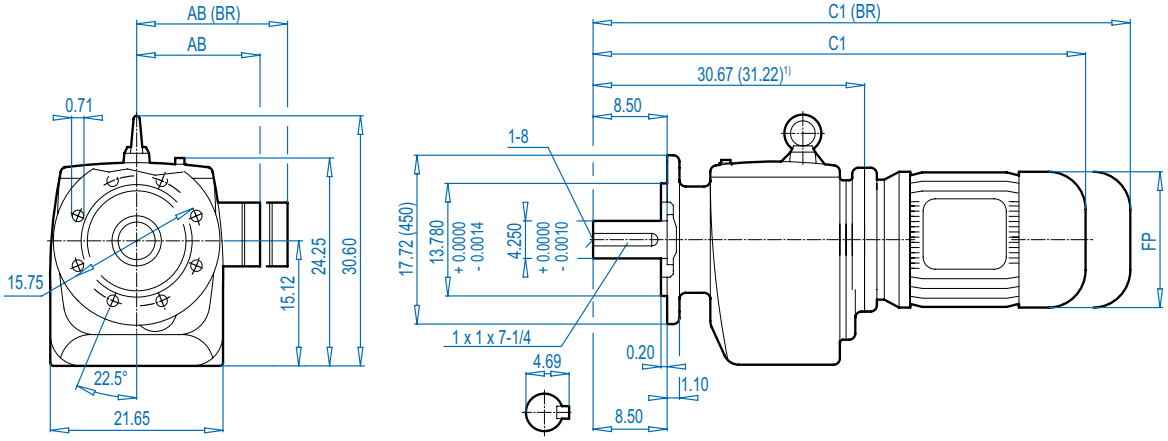

Motor Dimensions

Standard eff.	132 S/M	160 M/L		180 MX/LX		200 L	225 S/M		250 M1)		280 S1)	For Other Connection Possibilities please see ⇨ 237
Energy eff.	132 SH/MH	160 MH	160 LH		180 MH/LH	200 LH		225 SH/MH		250 MH1)	280 SH1)	
AB	8.03	8.90	8.90	8.90	10.20	12.05	12.05	12.80	15.43	15.43	17.01	
AB (BR)	7.72	8.90	8.90	8.90	10.20	12.05	12.05	-	15.43	15.43	17.01	
C	44.99	46.68	48.26	48.26	51.57	54.96	54.96	54.84	58.34	61.10	62.48	
C (BR)	49.20	53.26	54.99	54.99	55.70	61.53	61.53	-	66.61	69.36	73.70	
C1	47.80	49.48	51.06	51.06	54.37	57.76	57.76	57.64	61.14	63.90	65.28	
C1 (BR)	52.01	56.06	57.79	57.79	58.50	64.33	64.33	-	69.41	72.16	76.50	
FP	10.16	12.60	12.60	12.60	14.09	15.67	15.67	17.52	19.49	19.49	22.64	



(BR) denotes Brakemotor 1) This motor type increases overall dimension length

Send Quote Requests to info@automatedpt.com
Call +1(800)985-6929 To Order or Order Online At Nordgearmotors.com

Send Quote Requests to info@automatedpt.com
Call +1(800)985-6929 To Order or Order Online At Nordgearmotors.com

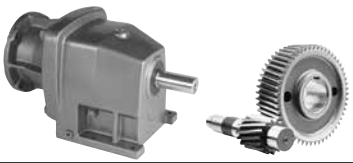

SK 93 + NEMA
SK 93F + NEMA

SK 93

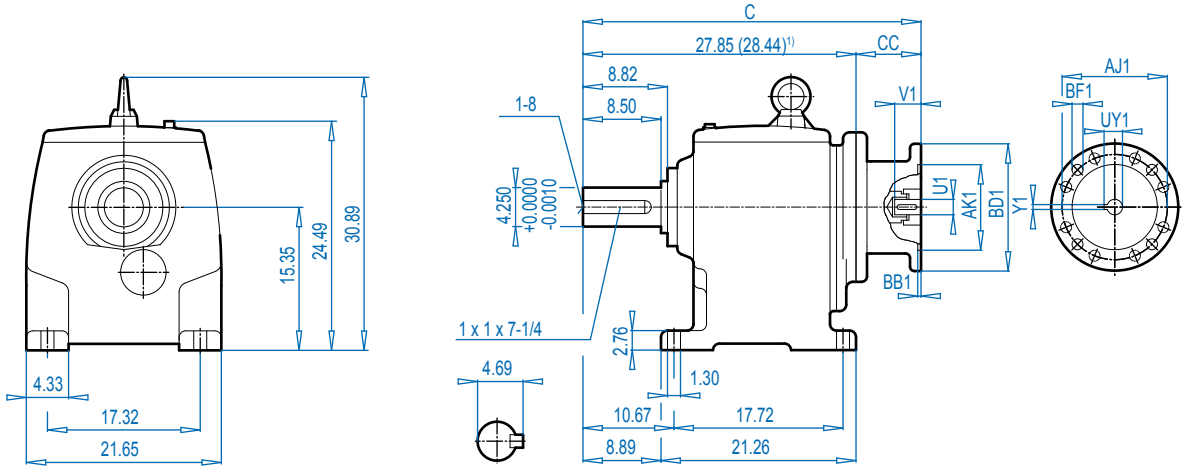

SK 93F

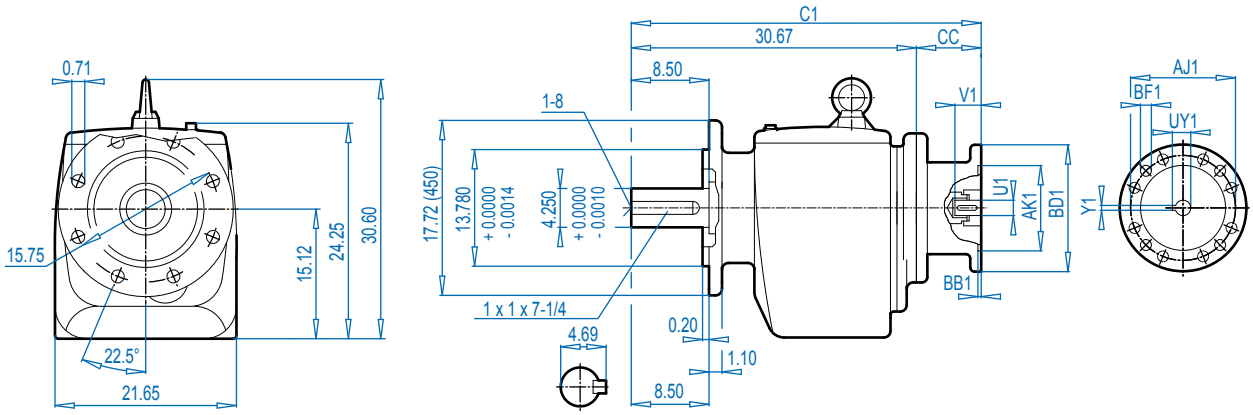

ALTERNATE SHAFTS SEE PAGE 239

NEMA Dimensions

Type	AJ1	AK1	BB1	BD1	BF1	U1	V1	UY1	Y1	C	C1	CC
180TC	7.25	8.500	0.23	9.17	0.59	1.125	2.62	1.24	0.250	35.37	38.19	7.52
210TC	7.25	8.500	0.39	9.17	0.59	1.375	3.12	1.52	0.312	35.37	38.19	7.52
250TC	7.25	8.500	0.23	9.17	0.59	1.625	3.75	1.80	0.375	39.23	42.05	11.38
280TC	9.00	10.500	0.23	13.78	0.59	1.875	4.38	2.03	0.500	39.23	42.05	11.38
320TC	11.00	12.500	0.23	13.78	0.71	2.125	5.00	2.35	0.500	38.21	41.02	10.35
360TC1)	11.00	12.500	0.16	17.72	0.71	2.375	5.62	2.65	0.625	41.71	43.94	13.27

Send Quote Requests to info@automatedpt.com
Call +1(800)985-6929 To Order or Order Online At Nordgearmotors.com

SK 93 - W
SK 93F - W

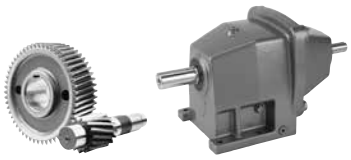

DRIVESYSTEMS

SK 93

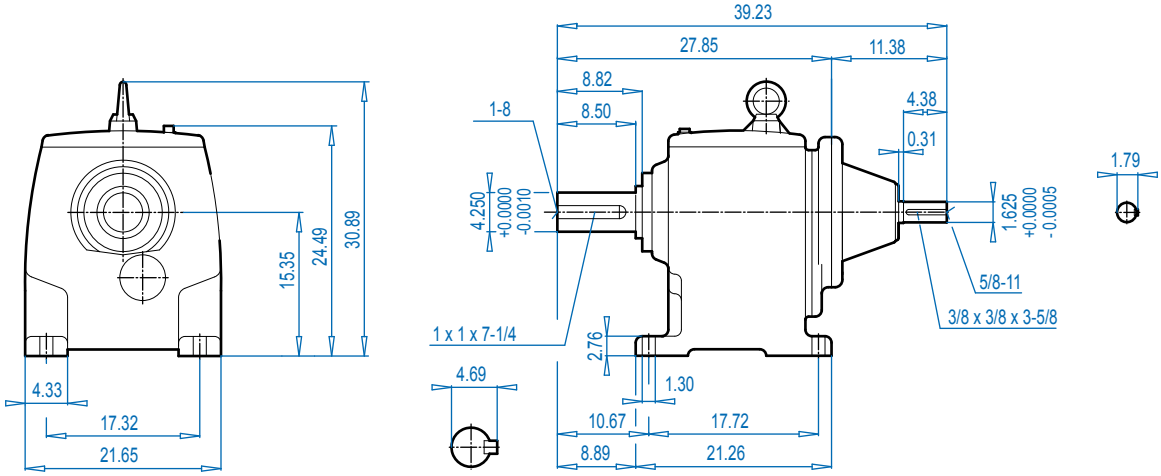

SK 93F

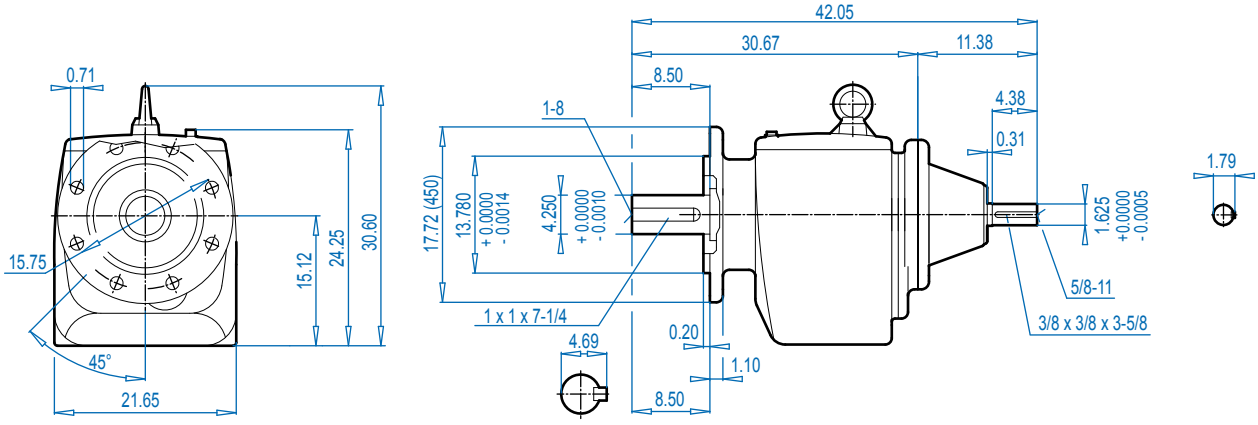

ALTERNATE SHAFTS SEE PAGE 239

Send Quote Requests to info@automatedpt.com
Call +1(800)985-6929 To Order or Order Online At Nordgearmotors.com

Send Quote Requests to info@automatedpt.com
Call +1(800)985-6929 To Order or Order Online At Nordgearmotors.com

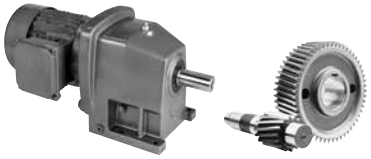

SK 102 + Motor
SK 102F + Motor

SK 102

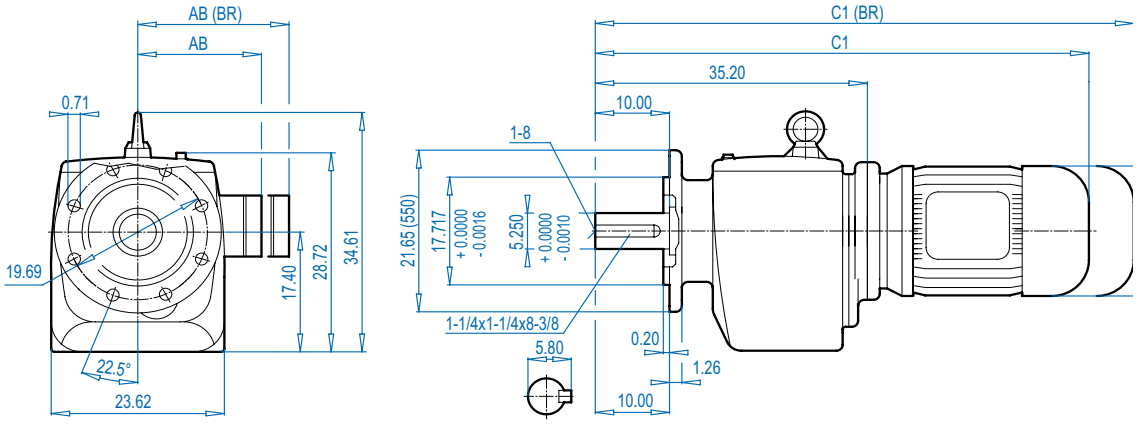

SK 102F

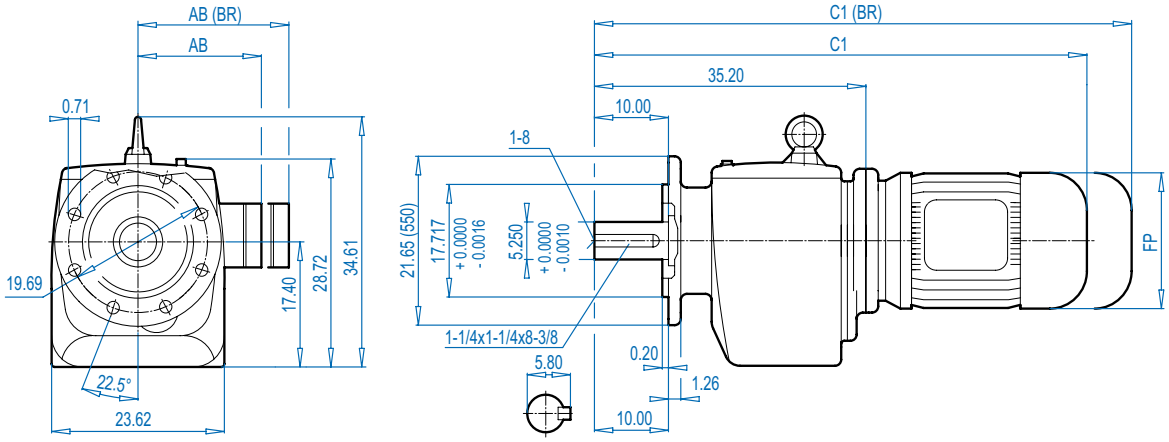

ALTERNATE SHAFTS SEE PAGE 239

Motor Dimensions

Standard efficiency	280M		315S	315Ma			For Other Connection Possibilities please see ⇨🕮 237
Energy efficiency		280MH	315SH	315MHa			
AB	17.01	17.01	20.28	20.28			
AB (BR)	17.01	17.01	-	-			
C	60.70	65.03	66.61	72.12			
C (BR)	71.73	75.66	-	-			
C1	67.52	71.85	73.43	78.94			
C1 (BR)	78.15	82.48	-	-			
FP	21.85	21.85	25.39	25.39			

(BR) denotes Brakemotor

Send Quote Requests to info@automatedpt.com
Call +1(800)985-6929 To Order or Order Online At Nordgearmotors.com

SK 102 + NEMA
SK 102F + NEMA

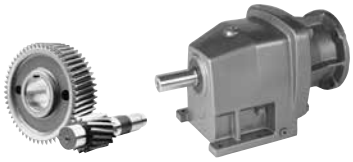

SK 102

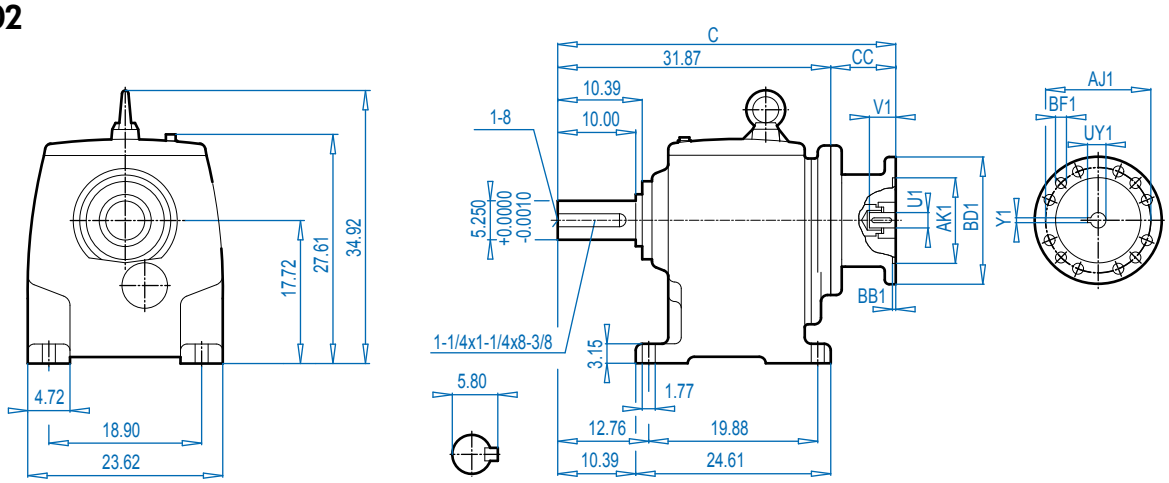

SK 102F

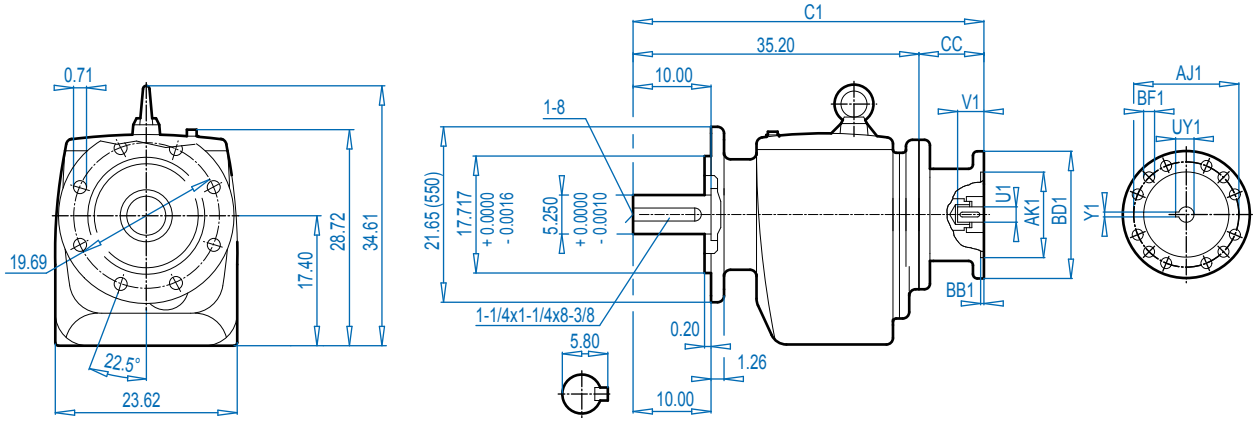

NEMA Dimensions

Type	AJ1	AK1	BB1	BD1	BF1	U1	V1	UY1	Y1	C	C1	CC
360TC	11.00	12.500	0.16	21.65	0.71	2.375	5.62	2.65	0.625	45.16	48.53	13.29
400TC	11.00	12.500	0.18	21.65	0.71	2.28	7.00	2.35	0.500	45.16	48.53	13.29

Send Quote Requests to info@automatedpt.com
Call +1(800)985-6929 To Order or Order Online At Nordgearmotors.com

DRIVESYSTEMS

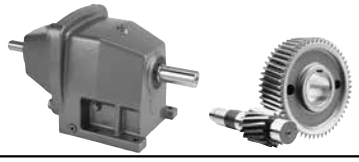

SK 102 - W
SK 102F - W

SK 102

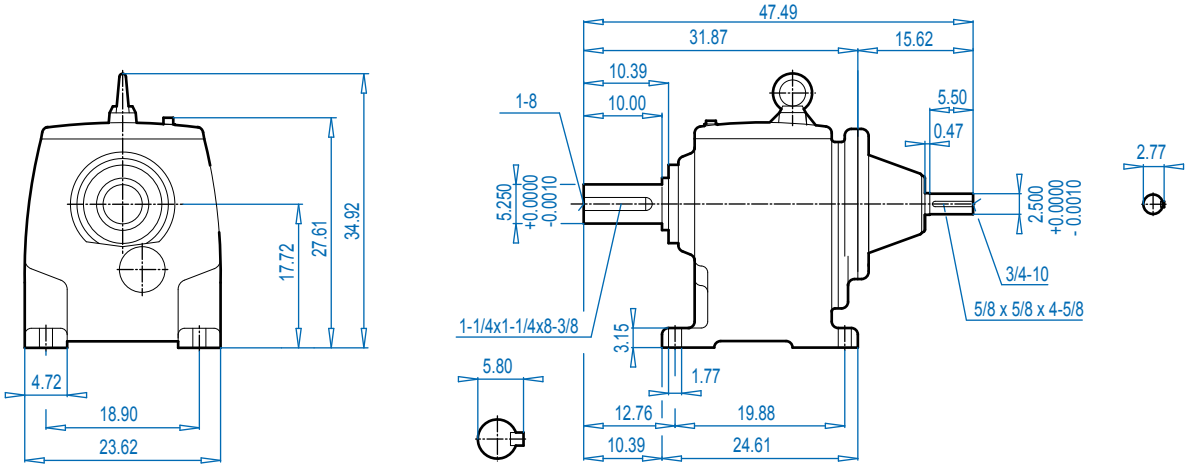

SK 102F

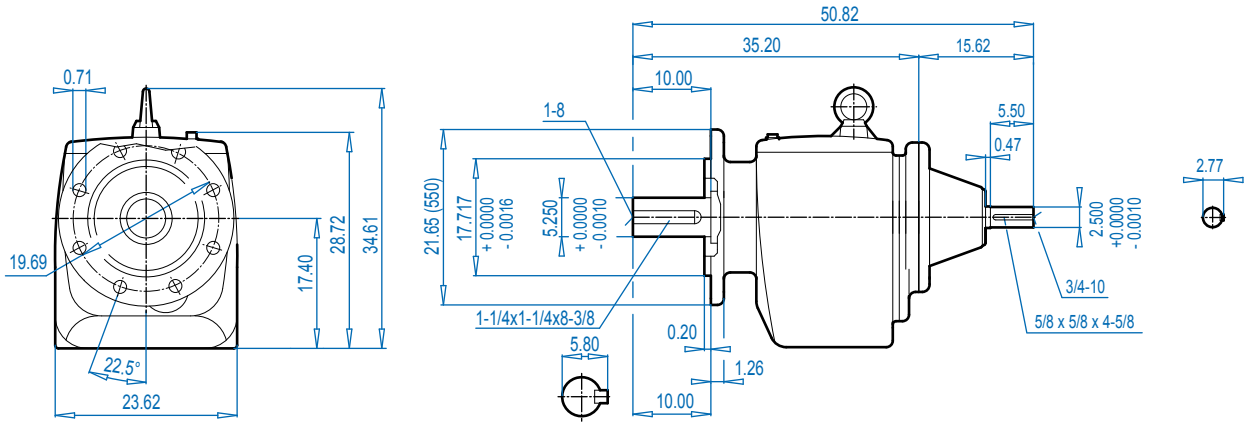

ALTERNATE SHAFTS SEE PAGE 239

Send Quote Requests to info@automatedpt.com
Call +1(800)985-6929 To Order or Order Online At Nordgearmotors.com

SK 103 + Motor
SK 103F + Motor

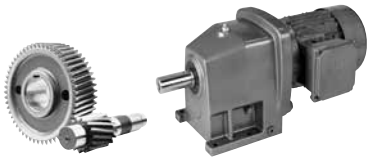

DRIVESYSTEMS

SK 103

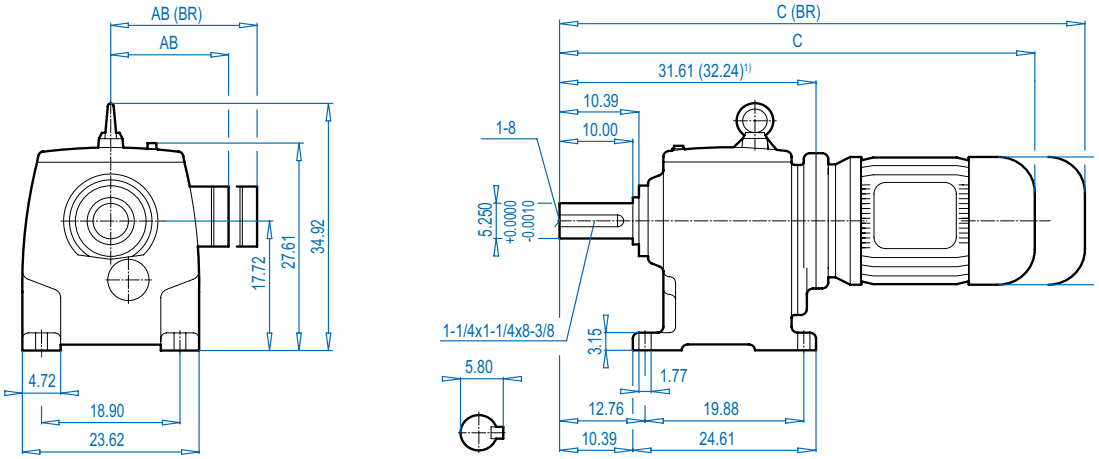

SK 103F

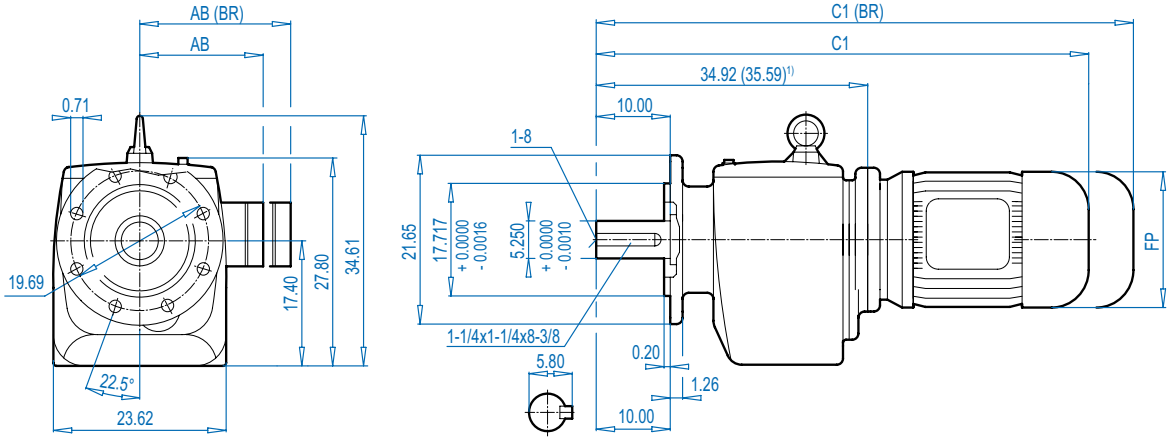

Motor Dimensions

Standard eff.	132S/M	160M/L	180MX/LX		200L	225S/M		250M1)		280S1)	280M1)		315S1)	For Other Connection Possibilities please see ⇨ 237
Energy eff.	132SH/MH	160MH	160LH	180MH/LH	200LH		225SH/MH		250MH1)	280SH1)		280MH1)		
AB	8.03	8.90	8.90	10.20	12.05	12.05	12.80	15.43	15.43	17.01	17.01	17.01	20.28	
AB (BR)	7.72	8.90	8.90	10.20	12.05	12.05	-	15.43	15.43	17.01	17.01	17.01	-	
C	48.74	50.43	52.00	55.31	58.70	58.70	58.58	62.16	64.92	66.30	64.52	68.85	70.43	
C (BR)	52.95	57.00	58.74	59.45	65.27	65.27	-	70.43	73.18	77.52	75.55	79.48	-	
C1	52.09	53.78	55.35	58.66	62.05	62.05	61.93	65.51	68.27	69.65	67.87	72.20	73.78	
C1 (BR)	56.30	60.35	62.09	62.80	68.62	68.62	-	73.78	76.53	80.87	78.90	82.83	-	
FP	10.16	12.60	12.60	14.09	15.67	15.67	17.52	19.49	19.49	22.64	21.85	21.85	25.39	



(BR) denotes Brakemotor 1) This motor type increases overall dimension length

Send Quote Requests to info@automatedpt.com
Call +1(800)985-6929 To Order or Order Online At Nordgearmotors.com

Send Quote Requests to info@automatedpt.com
Call +1(800)985-6929 To Order or Order Online At Nordgearmotors.com

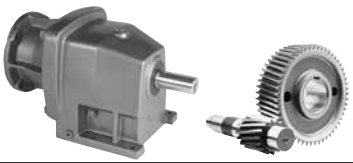

SK 103 + NEMA
SK 103F + NEMA

SK 103

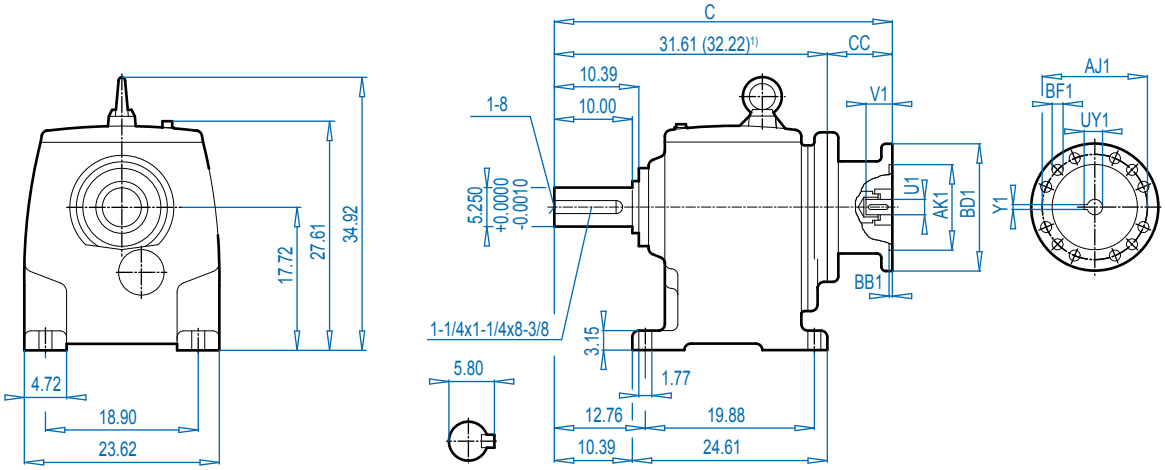

SK 103F

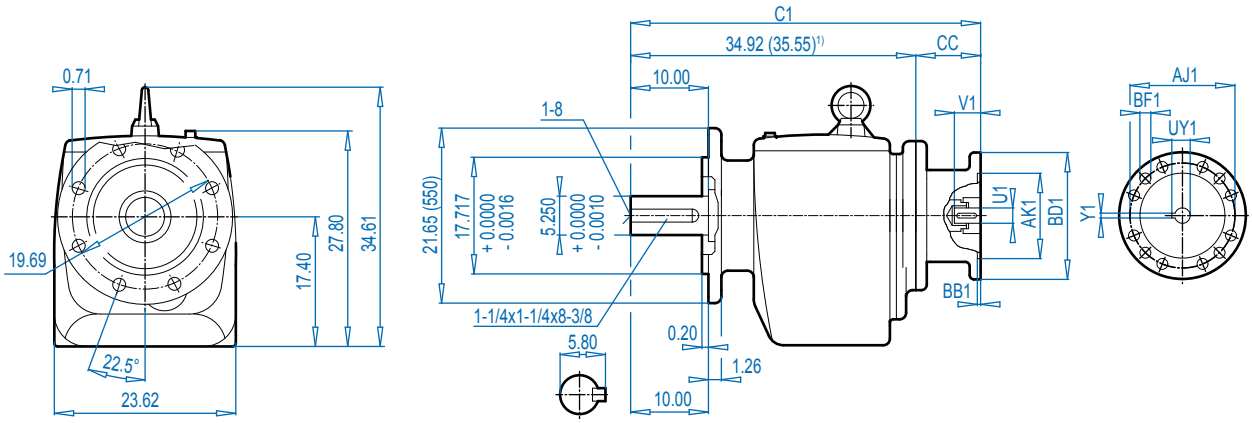

ALTERNATE SHAFTS SEE PAGE 239

NEMA Dimensions

Type	AJ1	AK1	BB1	BD1	BF1	U1	V1	UY1	Y1	C	C1	CC
180TC	7.25	8.500	0.23	9.17	0.59	1.125	2.62	1.24	0.250	39.11	42.44	7.52
210TC	7.25	8.500	0.39	9.17	0.59	1.375	3.12	1.52	0.312	39.11	42.44	7.52
250TC	7.25	8.500	0.23	9.17	0.59	1.625	3.75	1.80	0.375	42.97	45.90	11.38
280TC	9.00	10.500	0.23	13.78	0.59	1.875	4.38	2.03	0.500	42.97	45.90	11.38
320TC	11.00	12.500	0.23	13.78	0.71	2.125	5.00	2.35	0.500	41.95	44.87	10.35
360TC1)	11.00	12.500	0.16	21.65	0.71	2.375	5.62	2.65	0.625	45.51	47.81	13.29

Send Quote Requests to info@automatedpt.com
Call +1(800)985-6929 To Order or Order Online At Nordgearmotors.com

SK 103 - W
SK 103F - W

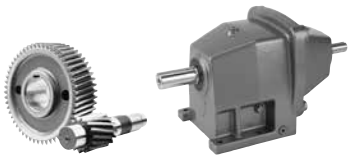

DRIVESYSTEMS

SK 103

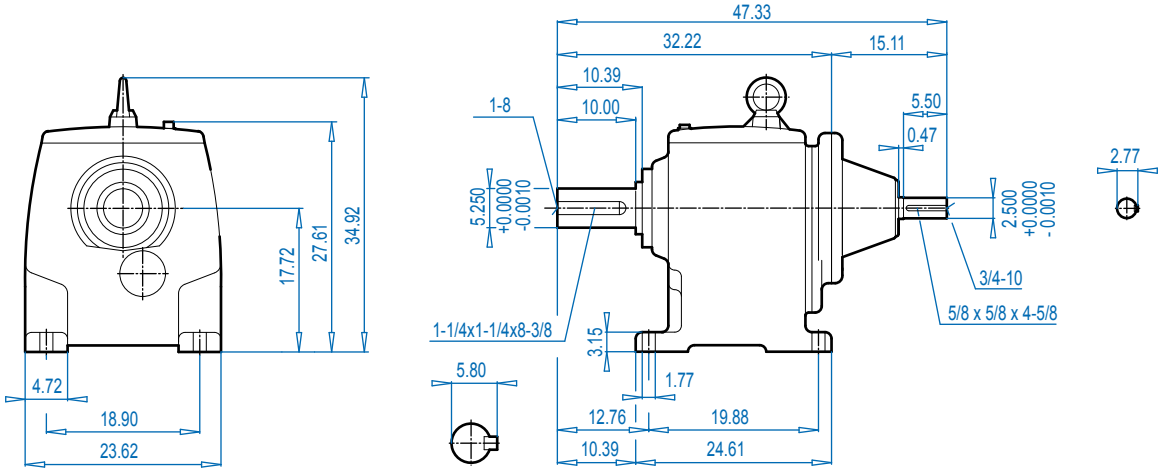

SK 103F

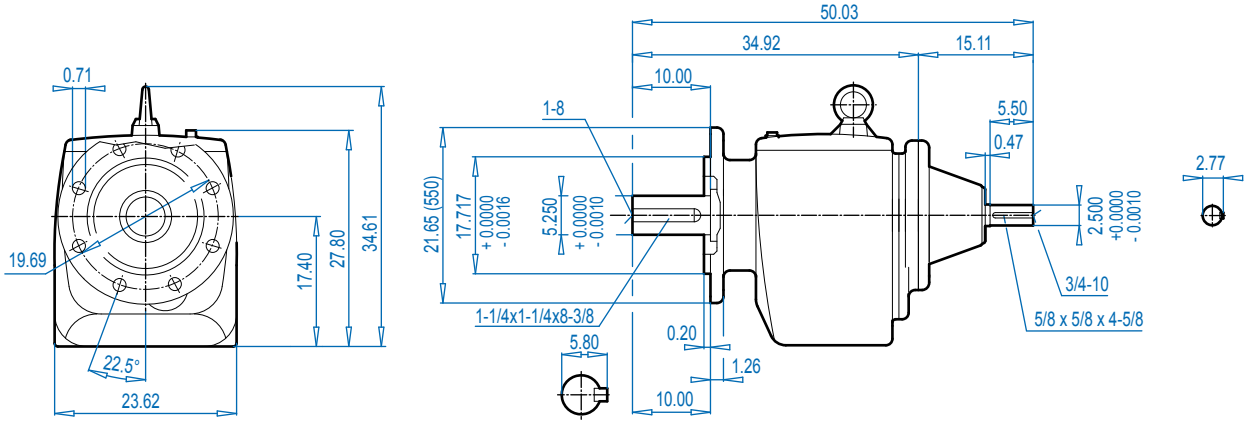

Send Quote Requests to info@automatedpt.com
Call +1(800)985-6929 To Order or Order Online At Nordgearmotors.com

Send Quote Requests to info@automatedpt.com
Call +1(800)985-6929 To Order or Order Online At Nordgearmotors.com



SK 12/02 + Motor - SK 52/12 + Motor

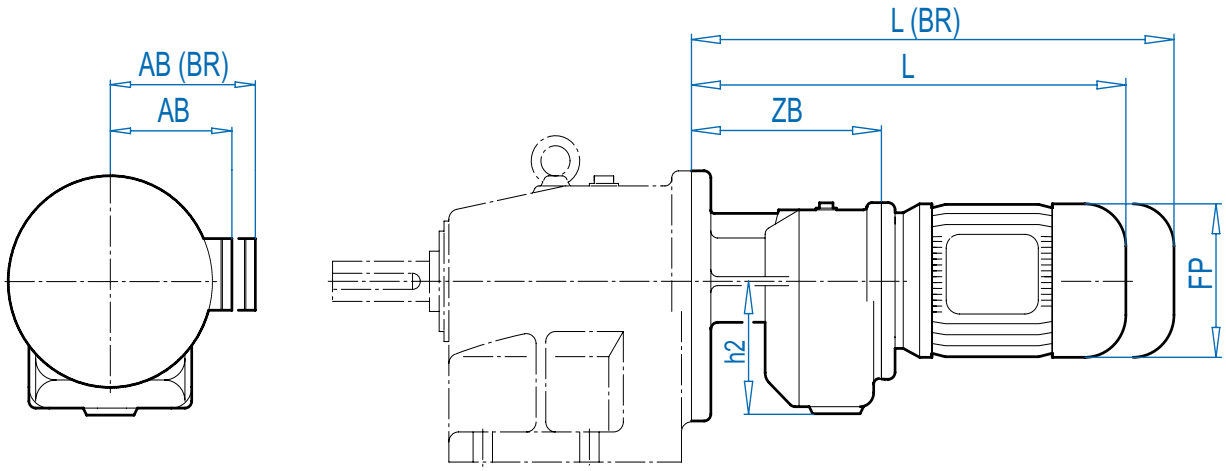

Motor dimensions

Type	SK 12/02		SK 22/02			SK 32/12				For Other Connection Possibilities please see ⇨🕮 236
Standard efficiency	63S/L	71S/L	63S/L	71S/L	80S/L	63S/L	71S/L	80S/L	90S/L	
Energy efficiency					80LH			80LH	90SH/LH	
AB	4.53	4.88	4.53	4.88	5.59	4.53	4.88	5.59	5.79	
AB (BR)	4.84	5.24	4.84	5.24	5.63	4.84	5.24	5.63	5.83	
FP	5.12	5.71	5.12	5.71	6.50	5.12	5.71	6.50	7.20	
L	13.31	14.88	13.94	15.51	16.50	14.45	16.02	17.01	18.62	
L (BR)	15.51	17.17	16.14	17.80	19.02	16.65	18.31	19.53	21.58	
h2	3.50		3.50			4.17				
ZB	5.59		6.62			6.73				
	SK 12 ⇨🕮 173		SK 22 ⇨🕮 179			SK 32 ⇨🕮 185				

Type	SK 42/12			SK 52/12						For Other Connection Possibilities please see ⇨🕮 236
Standard efficiency	63S/L	71S/L	80S/L	63S/L	71S/L	80S/L	90S/L	100L		
Energy efficiency			80LH			80LH	90SH/LH	100LH	112MH	
AB	4.53	4.88	5.59	4.53	4.88	5.59	5.79	6.65	7.05	
AB (BR)	4.84	5.24	5.63	4.84	5.24	5.63	5.83	6.26	6.69	
FP	5.12	5.71	6.50	5.12	5.71	6.50	7.20	7.91	8.98	
L	14.61	16.18	17.17	14.61	16.18	17.17	18.78	19.96	20.87	
L (BR)	16.81	18.47	19.69	16.81	18.47	19.69	21.73	23.54	24.53	
h2	4.17			4.17						
ZB	6.89			6.89						
	SK 42 ⇨🕮 191			SK 52 ⇨🕮 197						

(BR) denotes Brakemotor

Send Quote Requests to info@automatedpt.com
Call +1(800)985-6929 To Order or Order Online At Nordgearmotors.com

SK 63/22 + Motor - SK 93/42 + Motor

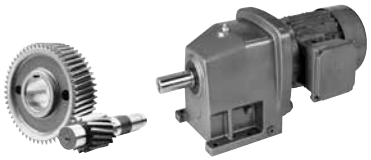

DRIVESYSTEMS

DIMENSIONS Dimensions in Inches

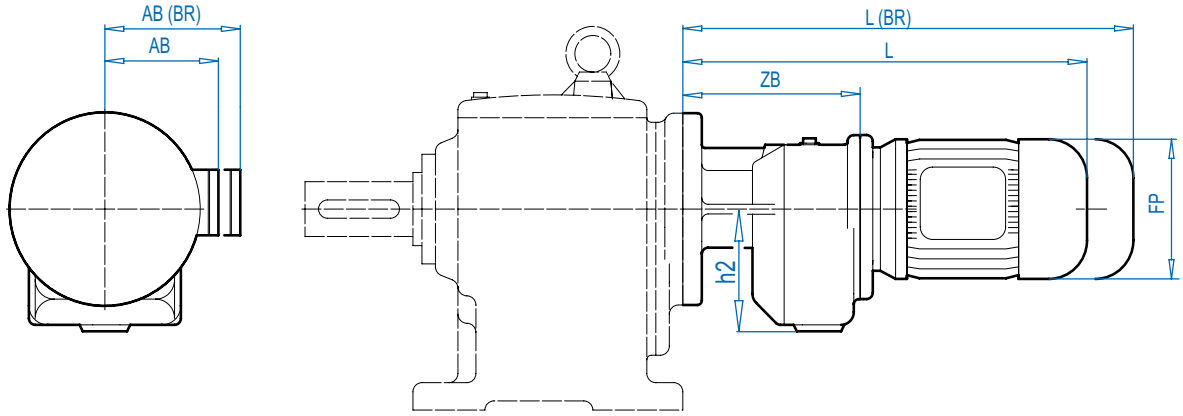

Motor dimensions

Type	SK 63/22				SK 73/22				For Other Connection Possibilities please see ⇨🕮 237
Standard efficiency	71S/L	80S/L	90S/L	100L	71S/L	80S/L	90S/L	100L	
Energy efficiency		80LH	90SH/LH	100LH		80LH	90SH/LH	100LH	
AB	4.88	5.59	5.79	6.65	4.88	5.59	5.79	6.65	
AB (BR)	5.24	5.63	5.83	6.26	5.24	5.63	5.83	6.26	
FP	5.71	6.50	7.20	7.91	5.71	6.50	7.20	7.91	
L	16.10	17.09	18.70	19.88	16.10	17.09	18.70	19.88	
L (BR)	13.39	19.61	21.65	23.47	13.39	19.61	21.65	23.47	
h2	4.92				4.92				
ZB	7.05				7.05				
	SK 63 ⇨🕮 206				SK 73 ⇨🕮 212				



Type	SK 73/32					SK 83/32			For Other Connection Possibilities please see ⇨🕮 237
Standard efficiency	90S/L	100L	112M		132S/M	71S/L	80S/L	90S/L	
Energy efficiency	90SH/LH	100LH		112MH	132SH/MH		80LH	90SH/LH	
AB	5.79	6.65	7.05	7.05	8.03	4.88	5.59	5.79	
AB (BR)	5.83	6.28	6.69	6.69	7.72	5.24	5.63	5.83	
FP	7.20	7.91	8.98	8.98	10.47	5.71	6.50	7.20	
L	20.28	21.46	22.36	22.36	25.75	17.68	18.66	20.28	
L (BR)	23.23	25.04	26.02	26.02	29.96	19.96	21.18	23.23	
h2	6.10					6.10			
ZB	8.62					8.62			
	SK 73 ⇨🕮 212					SK 83 ⇨🕮 218			



Type	SK 83/42				SK 93/42						For Other Connection Possibilities please see ⇨🕮 237
Standard eff.	90S/L	100L		132S/M	90S/L	100L	112M	132S/M	160M/L		
Energy eff.	90SH/LH	100LH	112M	132SH/MH	90SH/LH	100LH		132SH/MH	160MH	160LH	
AB	5.79	6.65	7.05	8.03	5.79	6.65	7.05	8.03	8.90	8.90	
AB (BR)	5.83	6.26	6.69	7.72	5.83	6.26	6.69	7.72	8.90	8.90	
FP	7.20	7.91	8.98	10.47	7.20	7.91	8.98	10.47	12.60	12.60	
L	21.14	22.32	23.23	26.61	21.14	22.32	23.23	26.61	29.09	29.09	
L (BR)	24.09	25.91	26.89	30.83	24.09	25.91	26.89	30.83	35.67	35.67	
h2	6.89				6.89						
ZB	10.28				10.28						
	SK 83 ⇨🕮 218				SK 93 ⇨🕮 224						



(BR) denotes Brakemotor

Send Quote Requests to info@automatedpt.com
Call +1(800)985-6929 To Order or Order Online At Nordgearmotors.com

DRIVESYSTEMS



SK 93/52 + Motor
SK 103/52 + Motor
SK 63/23 + Motor

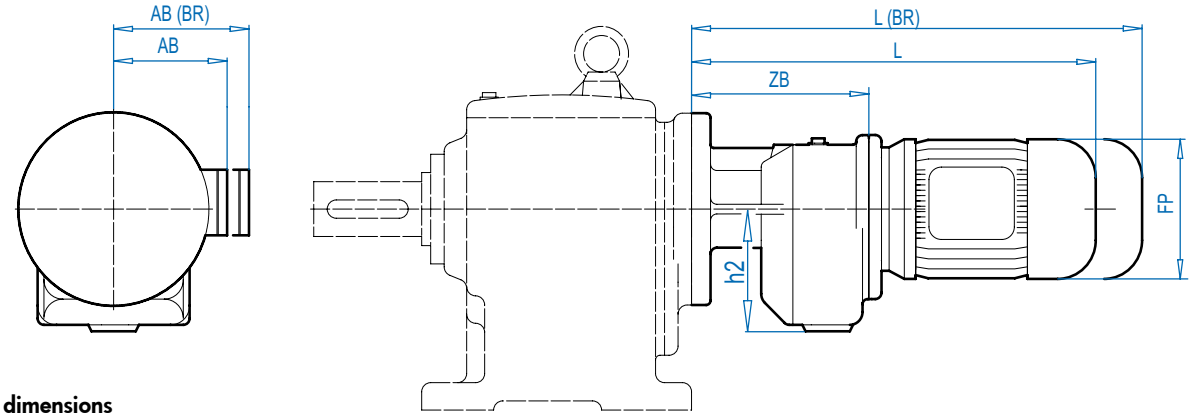

Motor dimensions

Type	SK 93/52			SK 103/52								For Other Connection Possibilities please see ⇨🕮 237
Standard eff.	132S/M	180MX/LX		90S/L	100L		132S/M	160M/L		180MX/LX		
Energy eff.	132SH/LH		180MH/LH	90SH/LH	100LH	112MH	132SH/MH	160MH	160LH		180MH/LH	
AB	8.03	8.90	10.20	5.79	6.65	7.05	8.03	8.90	8.90	8.90	10.20	
AB (BR)	7.72	8.90	10.20	5.83	6.26	6.69	7.72	8.90	8.90	8.90	10.20	
FP	10.47	12.60	14.09	7.20	7.91	8.98	10.47	12.60	12.60	12.60	14.09	
L	28.15	32.21	36.29	22.68	23.86	24.76	28.15	30.63	32.21	32.21	36.30	
L (BR)	32.36	38.94	40.43	25.63	27.44	28.43	32.36	37.21	38.94	38.94	40.43	
h2	8.35			8.35								
ZB	11.81			11.81								
	SK 93 ⇨🕮 224			SK 103 ⇨🕮 230								

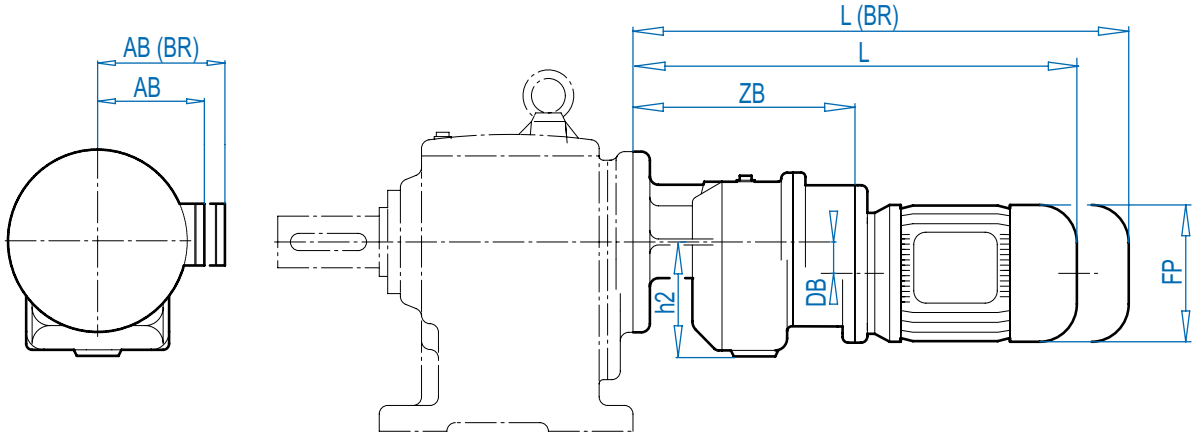

Type	SK 63/23								For Other Connection Possibilities please see ⇨🕮 237
Standard efficiency	63S/L	71S/L	80S/L						
Energy efficiency			80LH						
AB	4.53	4.88	5.59						
AB (BR)	4.84	5.24	5.63						
FP	5.12	5.71	6.50						
DB	1.67								
L	17.13	18.70	19.69						
L (BR)	19.33	20.98	22.21						
h2	4.92								
ZB	9.41								
	SK 63 ⇨🕮 206								

(BR) denotes Brakemotor

Send Quote Requests to info@automatedpt.com
Call +1(800)985-6929 To Order or Order Online At Nordgearmotors.com

IEC Inputs



DRIVESYSTEMS

DIMENSIONS
Dimensions in Inches

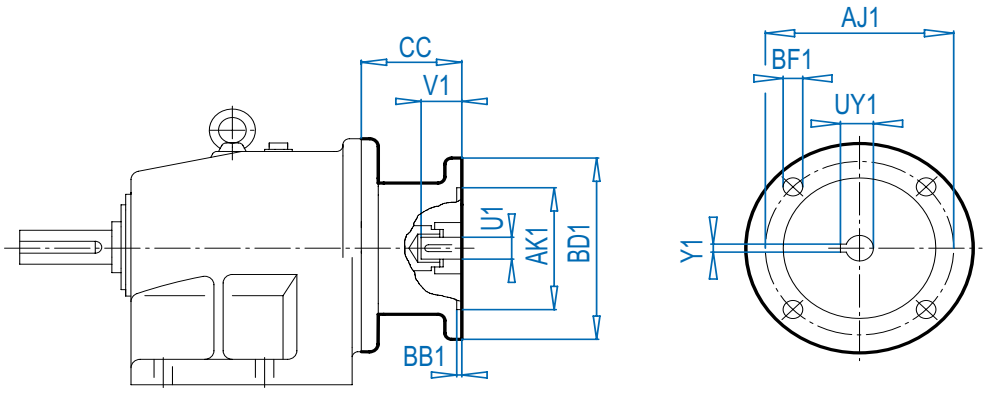

IEC Dimensions (mm)

Input	AJ1	AK1	BB1	BD1	BF1	U1	V1	UY1	Y1	Flange
IEC 63	115	95	3.5	140	M8	11	23	12.8	4	Fig. 1
IEC 71	130	110	4.0	160	M8	14	30	16.3	5	Fig. 1
IEC 80	165	130	4.0	200	M10	19	40	21.8	6	Fig. 1
IEC 90	165	130	4.0	200	M10	24	50	27.3	8	Fig. 1
IEC 100	215	180	5.0	250	M12	28	60	31.3	8	Fig. 1
IEC 112	215	180	5.0	250	M12	28	60	31.3	8	Fig. 1
IEC 132	265	230	5.0	300	M12	38	80	41.3	10	Fig. 1
IEC 160	300	250	6.0	350	M16	42	110	45.3	12	Fig. 1
IEC 180	300	250	6.0	350	M16	48	110	51.8	14	Fig. 1
IEC 200	350	300	6.0	400	M16	55	110	59.3	16	Fig. 1
IEC 225	400	350	6.0	450	M16	60	140	64.4	18	Fig. 2
IEC 250	500	450	6.0	550	M16	65	140	69.4	18	Fig. 2
IEC 280	500	450	6.0	550	M16	75	140	79.9	20	Fig. 2
IEC 315	600	550	7.0	660	M20	80	170	85.4	22	Fig. 2

CC Dimension (mm)

Unit	IEC 63	IEC71	IEC 80	IEC 90	IEC 100	IEC 112	IEC 132	IEC 160	IEC 180	IEC 200	IEC 225	IEC 250	IEC 280	IEC 315
SK 02	85	89	105	105	130	130	-	-	-	-	-	-	-	-
SK 03	85	89	105	105	130	130	-	-	-	-	-	-	-	-
SK 11E	85	89	105	105	130	130	-	-	-	-	-	-	-	-
SK 12	85	89	105	105	130	130	-	-	-	-	-	-	-	-
SK 13	85	89	105	105	130	130	-	-	-	-	-	-	-	-
SK 12/02	85	89	105	105	130	130	-	-	-	-	-	-	-	-
SK 21E	-	88	107	107	124	124	194	-	-	-	-	-	-	-
SK 22	-	88	107	107	124	124	194	-	-	-	-	-	-	-
SK 23	85	89	105	105	130	130	-	-	-	-	-	-	-	-
SK 22/02	85	89	105	105	130	130	-	-	-	-	-	-	-	-
SK 31E	-	88	107	107	124	124	194	-	-	-	-	-	-	-
SK 32	-	88	107	107	124	124	194	-	-	-	-	-	-	-
SK 33N	85	89	105	105	130	130	-	-	-	-	-	-	-	-
SK 32/12	85	89	105	105	130	130	-	-	-	-	-	-	-	-
SK 41E	-	-	-	109	133	133	190	194	194	-	-	-	-	-
SK 42	-	-	-	109	133	133	190	194	194	-	-	-	-	-
SK 43	-	88	107	107	124	124	194	-	-	-	-	-	-	-
SK 42/12	85	89	105	105	130	130	-	-	-	-	-	-	-	-
SK 51E	-	-	-	109	133	133	190	194	194	-	-	-	-	-
SK 52	-	-	-	109	133	133	190	194	194	-	-	-	-	-
SK 53	-	88	107	107	124	124	194	-	-	-	-	-	-	-
SK 52/12	85	89	105	105	130	130	-	-	-	-	-	-	-	-

Send Quote Requests to info@automatedpt.com
Call +1(800)985-6929 To Order or Order Online At Nordgearmotors.com

DRIVESYSTEMS

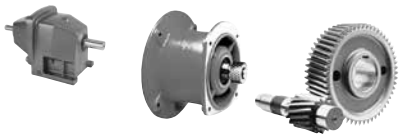

IEC Inputs

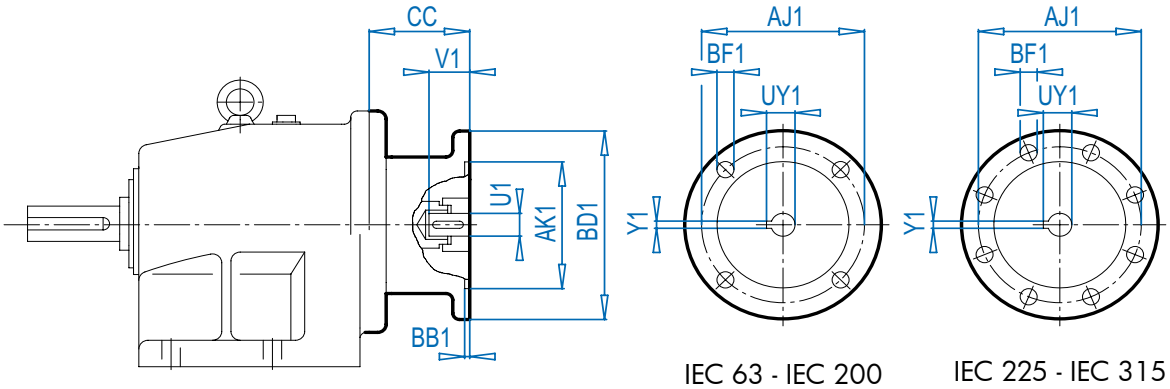

IEC 63 - IEC 200

IEC 225 - IEC 315

IEC Dimensions (mm)

Input	AJ1	AK1	BB1	BD1	BF1	U1	V1	UY1	Y1	Flange
IEC 63	115	95	3.5	140	M8	11	23	12.8	4	Fig. 1
IEC 71	130	110	4.0	160	M8	14	30	16.3	5	Fig. 1
IEC 80	165	130	4.0	200	M10	19	40	21.8	6	Fig. 1
IEC 90	165	130	4.0	200	M10	24	50	27.3	8	Fig. 1
IEC 100	215	180	5.0	250	M12	28	60	31.3	8	Fig. 1
IEC 112	215	180	5.0	250	M12	28	60	31.3	8	Fig. 1
IEC 132	265	230	5.0	300	M12	38	80	41.3	10	Fig. 1
IEC 160	300	250	6.0	350	M16	42	110	45.3	12	Fig. 1
IEC 180	300	250	6.0	350	M16	48	110	51.8	14	Fig. 1
IEC 200	350	300	6.0	400	M16	55	110	59.3	16	Fig. 1
IEC 225	400	350	6.0	450	M16	60	140	64.4	18	Fig. 2
IEC 250	500	450	6.0	550	M16	65	140	69.4	18	Fig. 2
IEC 280	500	450	6.0	550	M16	75	140	79.9	20	Fig. 2
IEC 315	600	550	7.0	660	M20	80	170	85.4	22	Fig. 2

CC Dimension (mm)

Unit	IEC 63	IEC71	IEC 80	IEC 90	IEC 100	IEC 112	IEC 132	IEC 160	IEC 180	IEC 200	IEC 225	IEC 250	IEC 280	IEC 315
SK 62	-	-	-	-	127	127	177	266	266	229	303	303.5	303.5	-
SK 63	-	-	-	109	133	133	190	194	194	-	-	-	-	-
SK 63/22	-	88	107	107	124	124	194	-	-	-	-	-	-	-
SK 63/23	85	89	105	105	130	130	-	-	-	-	-	-	-	-
SK 72	-	-	-	-	127	127	177	266	266	229	303	303.5	303.5	-
SK 73	-	-	-	-	127	127	177	266	266	229	303	303.5	303.5	-
SK 73/22	-	88	107	107	124	124	194	-	-	-	-	-	-	-
SK 73/23	85	89	105	105	130	130	-	-	-	-	-	-	-	-
SK 73/32	-	88	107	107	124	124	194	-	-	-	-	-	-	-
SK 82	-	-	-	-	-	-	177	266	266	229	303	303.5	304	381.5
SK 83	-	-	-	-	127	127	177	266	266	229	303	303.5	303.5	-
SK 83/32	-	88	107	107	124	124	194	-	-	-	-	-	-	-
SK 83/33N	85	89	105	105	130	130	-	-	-	-	-	-	-	-
SK 83/42	-	-	-	109	133	133	190	194	194	-	-	-	-	-
SK 92	-	-	-	-	-	-	177	266	266	229	303	303.5	304	381.5
SK 93	-	-	-	-	127	127	177	266	266	229	303	303.5	303.5	-
SK 93/42	-	-	-	109	133	133	190	194	194	-	-	-	-	-
SK 93/43	-	88	107	107	124	124	194	-	-	-	-	-	-	-
SK 93/52	-	-	-	109	133	133	190	194	194	-	-	-	-	-
SK 102	-	-	-	-	-	-	177	266	266	229	303	303.5	304	381.5
SK 103	-	-	-	-	-	-	177	266	266	229	303	303.5	304	381.5
SK 103/52	-	-	-	109	133	133	190	194	194	-	-	-	-	-
SK 103/53	-	88	107	107	124	124	194	-	-	-	-	-	-	-

Send Quote Requests to info@automatedpt.com
Call +1(800)985-6929 To Order or Order Online At Nordgearmotors.com

Send Quote Requests to info@automatedpt.com
Call +1(800)985-6929 To Order or Order Online At Nordgearmotors.com

Foot & Flange
XZ & XF

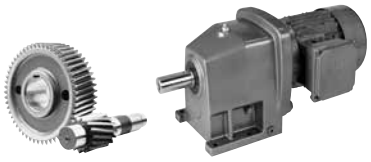

DRIVESYSTEMS

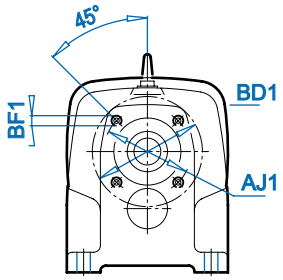

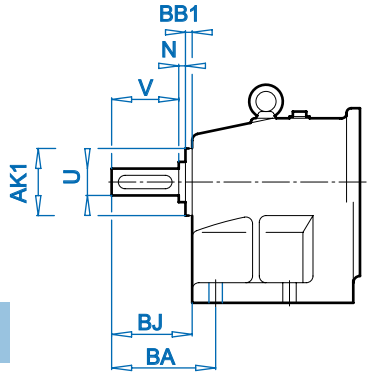

XZ = B14

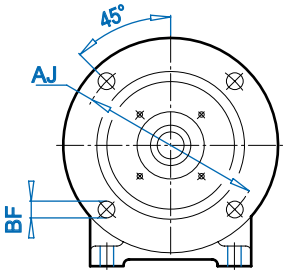

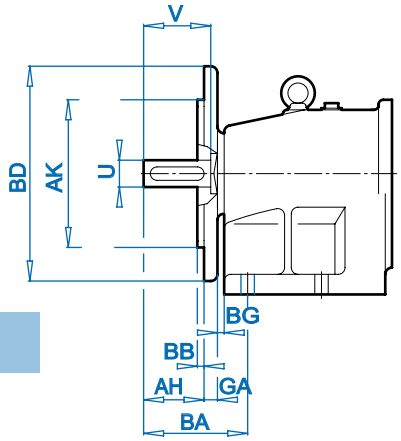

XF = B5

ALTERNATE SHAFTS SEE PAGE 239

Type	XZ Mounting dimensions							XF Mounting dimensions									Shaft dimensions		
	AJ1	AK1	BA	BB1	BD1	BF1	BJ	AH	AJ	AK	BA	BB	BD	BF	BG	GA	U	V	N
SK 02 X. SK 03 X.	2.84	2.165	1.97	0.32	3.54	4 x M8	1.58	0.99	5.12	4.331	1.97	0.14	6.30	0.35	0.20	0.39	0.750	1.50	.118
SK 12 X. SK 13 X.	3.15	2.362	3.22	0.35	3.74	4 x M8	2.52	1.85	6.50	5.118	3.22	0.14	7.87	0.43	0.20	0.47	1.000	2.13	.157
SK 22 X. SK 23 X.	3.94	2.835	3.30	0.39	5.12	4 x M12	2.71	1.89	8.47	7.087	3.30	0.16	9.84	0.55	0.20	0.63	1.250	2.75	.197
SK 32 X. SK 33N X.	4.72	3.543	3.88	0.43	5.91	4 x M16	3.21	2.23	10.43	9.055	3.88	0.16	11.81	0.55	0.20	0.79	1.625	3.25	.236
SK 42 X. SK 43 X.	5.32	4.133	5.07	0.55	6.50	4 x M16	4.13	3.15	10.43	9.055	5.07	0.16	11.81	0.55	0.20	0.79	1.875	3.50	.236
SK 52 X. SK 53 X.	6.50	5.276	5.18	0.75	7.87	4 x M16	4.40	3.41	11.81	9.843	5.18	0.20	13.78	0.71	0.20	0.79	2.250	4.00	.236

Send Quote Requests to info@automatedpt.com
Call +1(800)985-6929 To Order or Order Online At Nordgearmotors.com

DRIVESYSTEMS

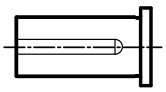

Solid Shaft Dimensions

Solid Shaft Dimesions

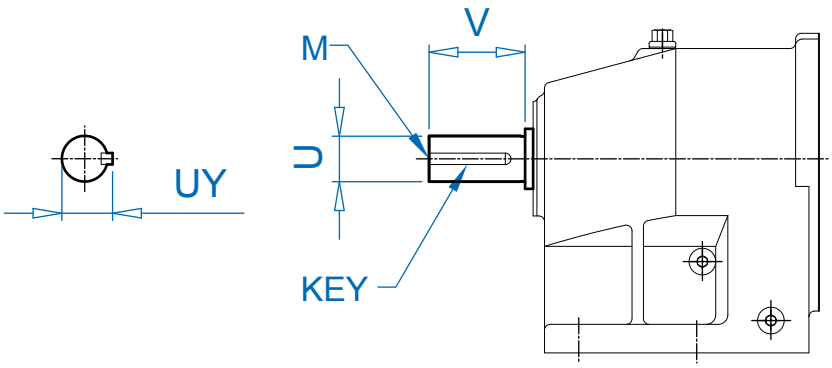

UNIT	U	DIAMETER TOLERANCE	V	UY	KEY SIZE w x h x l	KEY QTY	DRILL & TAP M
SK 11E/EF	0.750	+0.0000 / -0.0005	1.50	0.83	3/16 x 3/16 x 1	1	1/4-20
	20mm	+0.015 / +0.002mm	40mm	22.5mm	6 x 6 x 32mm	1	M6
SK 21E/EF	1.000	+0.0000 / -0.0005	2.13	1.11	1/4 x 1/4 x 1-5/8	1	3/8-16
	25mm	+0.015 / +0.002mm	50mm	28.0mm	8 x 7 x 40mm	1	M10
SK 31E/EF	1.250	+0.0000 / -0.0005	2.75	1.36	1/4 x 1/4 x 2-1/4	1	1/2-13
	30mm	+0.015 / +0.002mm	60mm	33.0mm	8 x 7 x 50mm	1	M10
SK 41E/EF	1.375	+0.0000 / -0.0005	3.00	1.51	5/16 x 5/16 x 2-1/8	1	5/8-11
	35mm	+0.018 / +0.002mm	70mm	38.0mm	10 x 8 x 56mm	1	M12
SK 51E/EF	1.625	+0.0000 / -0.0005	3.25	1.79	3/8 x 3/8 x 2-1/2	1	5/8-11
	40mm	+0.018 / +0.002mm	80mm	43.0mm	12 x 8 x 70mm	1	M16
SK 02/F	0.750	+0.0000 / -0.0005	1.50	0.83	3/16 x 3/16 x 1	1	1/4-20
SK 03/F	20mm	+0.015 / +0.002mm	40mm	22.5mm	6 x 6 x 32mm	1	M6
SK 12/F	1.000	+0.0000 / -0.0005	2.13	1.11	1/4 x 1/4 x 1-5/8	1	3/8-16
SK 13/F	25mm	+0.015 / +0.002mm	50mm	28.0mm	8 x 7 x 40mm	1	M10
SK 22/F	1.250	+0.0000 / -0.0005	2.75	1.36	1/4 x 1/4 x 2-1/4	1	1/2-13
SK 23/F	30mm	+0.015 / +0.002mm	60mm	33.0mm	8 x 7 x 50mm	1	M10
SK 32/F	1.625	+0.0000 / -0.0005	3.25	1.79	3/8 x 3/8 x 2-1/2	1	5/8-11
SK 33N/F	40mm	+0.018 / +0.002mm	80mm	43.0mm	12 x 8 x 70mm	1	M16
SK 42/F	1.875	+0.0000 / -0.0010	3.50	2.09	1/2 x 1/2 x 2-3/4	1	5/8-11
SK 43/F	45mm	+0.018 / +0.002mm	90mm	48.5mm	14 x 9 x 80mm	1	M16
SK 52/F	2.250	+0.0000 / -0.0010	4.00	2.47	1/2 x 1/2 x 3-1/4	1	3/4-10
SK 53/F	55mm	+0.030 / +0.011mm	110mm	59.0mm	16 x 10 x 90mm	1	M20
SK 62/F	2.500	+0.0000 / -0.0010	5.00	2.77	5/8 x 5/8 x 4	1	3/4-10
SK 63/F	65mm	+0.030 / +0.011mm	130mm	69.0mm	18 x 11 x 100mm	1	M20
SK 72/F	3.000	+0.0000 / -0.0010	5.50	3.33	3/4 x 3/4 x 4-1/2	1	3/4-10
SK 73/F	75mm	+0.030 / +0.011mm	140mm	79.5mm	20 x 12 x 125mm	1	M20
SK 82/F	3.500	+0.0000 / -0.0010	6.75	3.88	7/8 x 7/8 x 5-1/2	1	3/4-10
SK 83/F	90mm	+0.035 / +0.013mm	170mm	95.0mm	25 x 14 x 140mm	1	M24
SK 92/F	4.250	+0.0000 / -0.0010	8.50	4.69	1 x 1 x 7-1/4	1	1-8
SK 93/F	110mm	+0.035 / +0.013mm	210mm	116mm	28 x 16 x 180mm	1	M24
SK 102/F	5.250	+0.0000 / -0.0010	10.00	5.80	1-1/4 x 1-1/4 x 8-3/8	1	1-8
SK 103/F	130mm	+0.040 / +0.015mm	250mm	137mm	32 x 18 x 220mm	1	M24

- Dimensions are in inches unless otherwise noted.
- Metric Keys are captured in keyways.
- For shaft sizes not shown, consult NORD.

Send Quote Requests to info@automatedpt.com
Call +1(800)985-6929 To Order or Order Online At Nordgearmotors.com

Notes

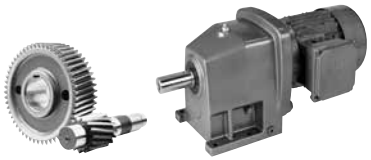

NORD DRIVESYSTEMS

NOTES

Send Quote Requests to info@automatedpt.com
Call +1(800)985-6929 To Order or Order Online At Nordgearmotors.com

Clincher™ Shaft Mount Gearmotors

Selection

- Order Form
- Unit Examples
- 0.16 hp
- 0.25 hp
- 0.33 hp
- 0.50 hp
- 0.75 hp
- 1.0 hp
- 1.5 hp
- 2.0 hp
- 3.0 hp
- 5.0 hp
- 7.5 hp
- 10 hp
- 15 hp
- 20 hp
- 25 hp
- 30 hp
- 40 hp
- 50 hp
- 60 hp
- 75 hp
- 100 hp
- 125 hp
- 150 hp
- 175 hp
- 200 hp

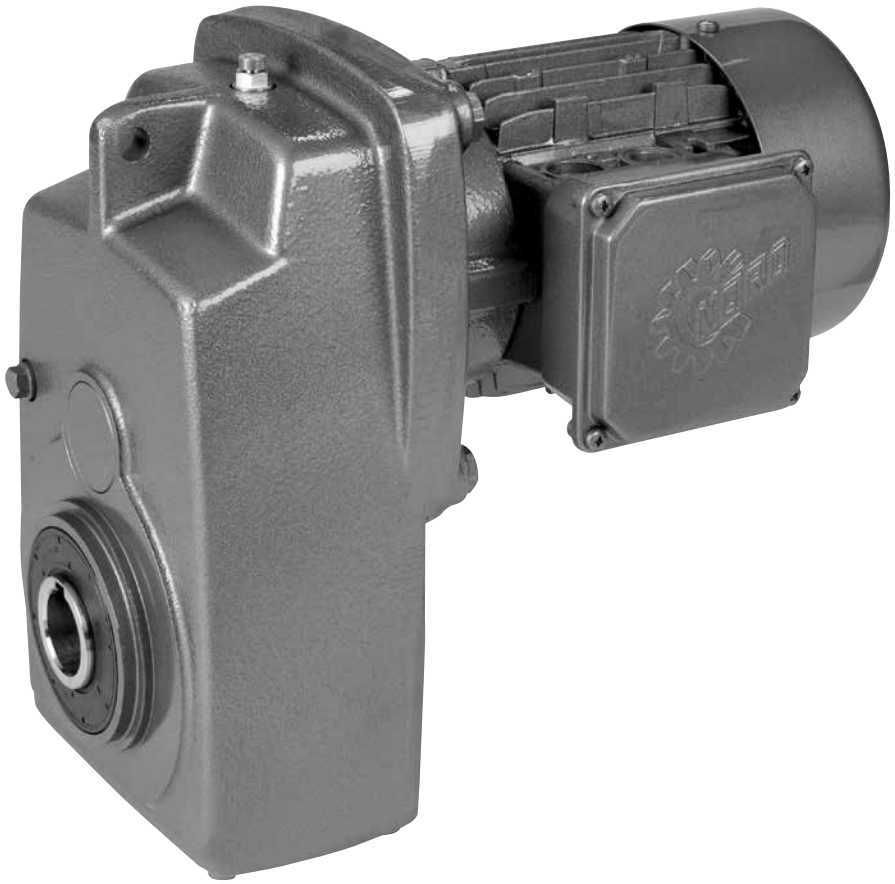

NORD® DRIVESYSTEMS

UNICASE™

www.nord.com

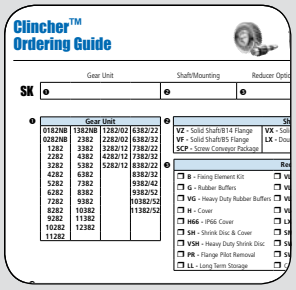

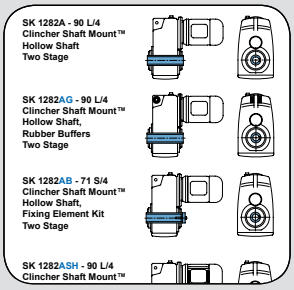

Motor Power P_n	Output Speed n_2	Output Torque T_a	Service Factor F_s	AGMA Class	Gear Ratio i_{tot}	Standard Bearings F_{QN} OHL	F_{AN} Thrust
[hp]	[rpm]	[lb-in]				[lb]	[lb]
0.16	401	25	18.9	III	4.24	518	824
	318	32	18.8	III	5.34	558	909
	268	38	18.8	III	6.35	590	979
	234	43	16.8	III	7.26	617	1037
	197	52	16.8	III	8.64	653	1114
	179	57	16.8	III	9.49	671	1148
	146	70	14.0	III	11.66	718	1148
	123	83	11.8	III	13.84	758	1148
	103	99	9.0	III	16.53	803	1148
	114	89	7.5	III	14.92	774	1148
	90	112	7.5	III	18.79	835	1148
	76	133	7.2	III	22.35	882	1148
	69	146	7.0	III	24.55	907	1148
	58	174	5.6	III	29.13	959	1148
	53	190	4.4	III	31.81	983	1148
	49	208	4.4	III	34.80	1013	1148
	45	225	3.9	III	37.73	1037	1148
	41	250	3.0	III	41.85	1069	1148
	34	296	3.0	III	49.65	1125	1148
	29	354	2.8	III	59.33	1125	1148
	21	487	1.2	I	81.71	1125	1148

Clincher™ Ordering Guide

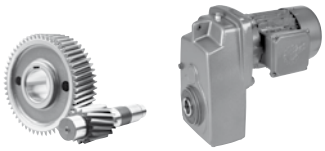

DRIVESYSTEMS

	Gear Unit	Shaft/Mounting	Reducer Options		Motor/Input	Motor Options
SK	❶	❷	❸	-	❹	
					see page 690	see page 690

❶

Gear Unit			
0182NB	1382NB	1282/02	6382/22
0282NB	2382	2282/02	6382/32
1282	3382	3282/12	7382/22
2282	4382	4282/12	7382/32
3282	5382	5282/12	8382/22
4282	6382		8382/32
5282	7382		9382/42
6282	8382		9382/52
7282	9382		10382/52
8282	10382		11382/52
9282	11382		
10282	12382		
11282			

❷

Shaft/Mounting		
VZ - Solid Shaft/B14 Flange	**VX -** Solid Shaft/Foot	**AZ** - Hollow Shaft/B14 Flange
VF - Solid Shaft/B5 Flange	**LX -** Double Solid Shaft/Foot	**AF** - Hollow Shaft/B5 Flange
SCP - Screw Conveyor Package		**AX** - Hollow Shaft/Foot

❸

Reducer Options		
❒ **B -** Fixing Element Kit	❒ **VL -** Heavy Duty Output Bearings	❒ **VI -** Fluoro-rubber Seals
❒ **G -** Rubber Buffers	❒ **VL2 -** Spread Bearing Design	❒ **OSG -** Oil Sight Glass
❒ **VG -** Heavy Duty Rubber Buffers	❒ **VL3 -** Oil Safe Spread Bearing Design	❒ **OA -** Oil Expansion Chamber
❒ **H -** Hollow Shaft Cover	❒ **VL4-** Drywell Drop Bearing Design	❒ **OC -** Oil Cooler
❒ **H66 -** IP66 Hollow Shaft Cover	❒ **LX-** Double Solid Shaft	❒ **WC -** Water Cooling Cover
❒ **SH -** Shrink Disc & Cover	❒ **SM5 -** Stainless Steel Output Shaft	❒ **OT -** Oil Reservoir Tank
❒ **VSH -** Heavy Duty Shrink Disc & Cover	❒ **SWA -** Special Hollow Shaft	❒ **MDP -** Magnetic Drain Plug
❒ **PR -** Flange Pilot Removal	❒ **SWV -** Special Solid Shaft	❒ **ADP -** Additional Drain Plug
❒ **LL -** Long Term Storage	❒ Cross Drilled Shaft	

❹

Input Shaft	NEMA Adapter	IEC	Integral Motors		Integral Energy Efficent Motors		Scoop	Motor Platform	Servo Adapter (Keyed)
W	N56C	IEC 63	63S/4 - 0.16hp	160L/4 - 20hp	80LH/4 - 1hp	200LH/4 - 40hp	S56	MKN056	SEP 100
	N140TC	IEC 71	63L/4 - 0.25hp	180MX/4 - 25hp	90SH/4 - 1.5hp	225SH/4 - 50hp	S140T	MKN140	SEP 130
	N180TC	IEC 80	71S/4 - 0.33hp	180LX/4 - 30hp	90LH/4 - 2hp	225MH/4 - 60hp	S180T	MKN180	SEP 165
	N210TC	IEC 90	71L/4 - 0.50hp	200L/4 - 40hp	100LH/4 - 3hp	250MH/4 - 75hp	S210T	MKN210	SEP 215
	N250TC	IEC 100	80S/4 - 0.75hp	225S/4 - 50hp	112MH/4 - 5hp	280SH/4 - 100hp	S250T	MKN250	SEP 300
	N280TC	IEC 112	80L/4 - 1hp	225M/4 - 60hp	132SH/4 - 7.5hp	280MH/4 - 125hp	S280T	MKN280	Servo Adapter (Clamp)
	N320TC	IEC 132	90S/4 - 1.5hp	250M/4 - 75hp	132MH/4 - 10hp	315SH/4 - 150hp	S320T	MKN320	
	N360TC	IEC 160	90L/4 - 2hp	280S/4 - 100hp	160MH/4 - 15hp	315MH/4 - 175hp	S360T	MKN360	SEK 100
	N400TC	IEC 180	100L/4 - 3hp	280M/4 - 125hp	160LH/4 - 20hp	315MAH/4 - 200hp	S400T	MKN400	SEK 130
		IEC 200	100LA/4 - 5hp	315S/4 - 150hp	180MH/4 - 25hp	315LH/4 - 250hp			SEK 165
		IEC 225	112M/4 - 5.4hp	315M/4 - 175hp	180LH/4 - 30hp				SEK 215
		IEC 250	132S/4 - 7.5hp	315MA/4 - 200hp					SEK 300
		IEC 280	132M/4 - 10hp	315L/4 - 250hp					
		IEC 315	160M/4 - 15hp	Other Speeds Available		Other Speeds Available			

Product Specifications

Ratio

_____ :1

see pages 244 - 288

__ OR __

Output Speed

_____ rpm

see pages 244 - 288

Mounting Position

- ❍ M1
- ❍ M2
- ❍ M3
- ❍ M4
- ❍ M5
- ❍ M6
- ❍ Special _____

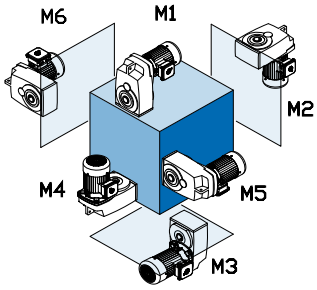

Paint

- ❍ Standard Stainles Steel Paint
- ❍ NSD+ (gray)
- ❍ NSD+W (white)
- ❍ NSD-X3 (gray)
- ❍ NSD-X3W (white)
- ❍ Casting Primed
- ❍ Special _____

Lubricant

- ❍ Standard
- ❍ Synthetic
- ❍ Food Grade
- ❍ Other _____

Hollow Shaft Diameter (If required)

see pages 388 - 393

B5 Flange Diameter (If required)

SCP Drive Shaft Diameter (If required)

see page 29

Gearmotor Only Details

Voltage & Frequency

- ❍ 230/460V-60Hz (460V only ≥ 40 hp)
- ❍ 575V-60Hz
- ❍ 208V-60Hz
- ❍ 400V-50Hz
- ❍ 115/230V-60Hz, 1 ph.
- ❍ Other _____

Terminal Box Pos.

- ❍ TB1
- ❍ TB2
- ❍ TB3
- ❍ TB4

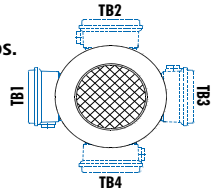

Mtg. Pos. M1 Shown

Conduit Entry Loc.

- ❍ CE I *
- ❍ CE II
- ❍ CE III *
- ❍ CE IV

* Brakemotor

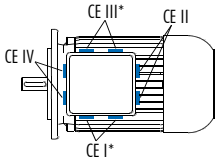

Mtg. Pos. M1 Shown

Send Quote Requests to info@automatedpt.com
Call +1(800)985-6929 To Order or Order Online At Nordgearmotors.com

DRIVESYSTEMS



Unit Examples

Examples of Clincher Shaft Mount™ with Solid Shaft Design

SK 1282V - 90 L/4
Clincher Shaft Mount™
Solid Shaft
Two Stage

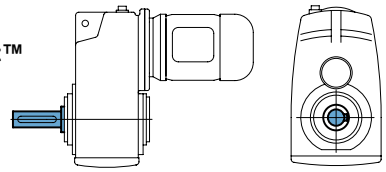

SK 1282 VZ - 90 L/4
Clincher Shaft Mount™
Solid Shaft, B14 Flange
Two Stage

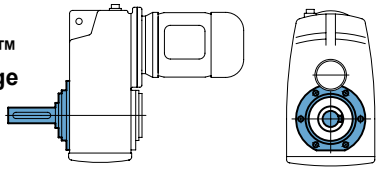

SK 1282 VF - 90 L/4
Clincher Shaft Mount™
Solid Shaft, B5 Flange
Two Stage

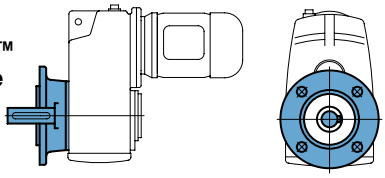

SK 1282 VX - 90 L/4
Clincher Shaft Mount™
Solid Shaft, Foot Mounted
Housing, Two Stage

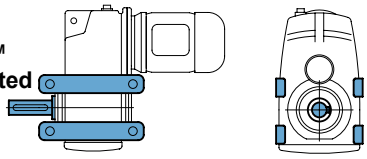

Examples of Clincher Shaft Mount™ with Hollow Shaft Design

SK 1282A - 90 L/4
Clincher Shaft Mount™
Hollow Shaft
Two Stage

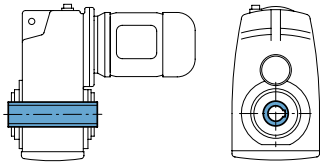

SK 1282AG - 90 L/4
Clincher Shaft Mount™
Hollow Shaft,
Rubber Buffers
Two Stage

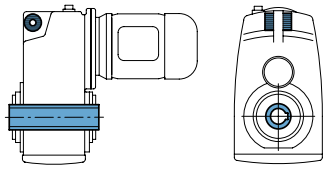

SK 1282AB - 71 S/4
Clincher Shaft Mount™
Hollow Shaft,
Fixing Element Kit
Two Stage

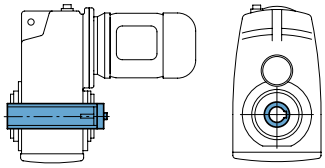

SK 1282ASH - 90 L/4
Clincher Shaft Mount™
Hollow Shaft, Shrink Disc,
Shrink Disc Cover
Two Stage

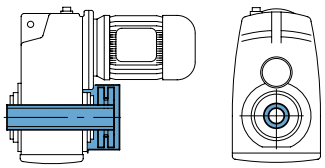

SK 1282AZ - 90 L/4
Clincher Shaft Mount™
Hollow Shaft, B14 Flange
Two Stage

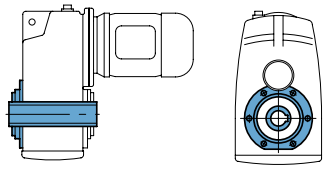

SK 1282AF - 90 L/4
Clincher Shaft Mount™
Hollow Shaft, B5 Flange
Two Stage

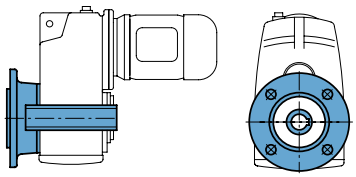

SK 1282AX - 90 L/4
Clincher Shaft Mount™
Hollow Shaft,
Foot Mounted Housing
Two Stage

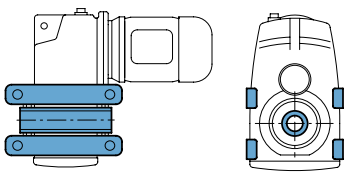

SK 1282AXSH - 80 L/4
Clincher Shaft Mount™
Hollow Shaft, Shrink Disc,
Shrink Disc Cover,
Foot Mounted Housing
Two Stage

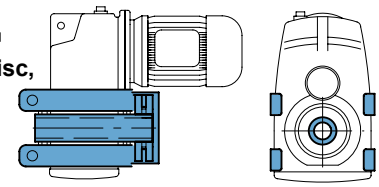

Send Quote Requests to info@automatedpt.com
Call +1(800)985-6929 To Order or Order Online At Nordgearmotors.com

0.16 hp Gearmotors



DRIVESYSTEMS

Motor Power P_n [hp]	Output Speed n_2 [rpm]	Output Torque T_a [lb-in]	Service Factor f_B	AGMA Class	Gear Ratio i_{tot}	Standard Bearings F_{RN} OHL [lb]	Standard Bearings F_{AN} Thrust [lb]	Heavy Duty Bearings (VL) F_{RVL} OHL [lb]	Heavy Duty Bearings (VL) F_{AVL} Thrust [lb]	Model Type	Weight [lb]	Dim. Page
0.16	401	25	18.9	III	4.24	518	824	1125	1890	SK 0182NB - 63S/4	17	312
	318	32	18.8	III	5.34	558	909	1125	1890			
	268	38	18.8	III	6.35	590	979	1125	1890			
	234	43	16.8	III	7.26	617	1037	1125	1890			
	197	52	16.8	III	8.64	653	1114	1125	1890			
	179	57	16.8	III	9.49	671	1148	1125	1890			
	146	70	14.0	III	11.66	718	1148	1125	1890			
	123	83	11.8	III	13.84	758	1148	1125	1890			
	103	99	9.0	III	16.53	803	1148	1125	1890			
	114	89	7.5	III	14.92	774	1148	1125	1890			
	90	112	7.5	III	18.79	835	1148	1125	1890			
	76	133	7.2	III	22.35	882	1148	1125	1890			
	69	146	7.0	III	24.55	907	1148	1125	1890			
	58	174	5.6	III	29.13	959	1148	1125	1890			
	53	190	4.4	III	31.81	983	1148	1125	1890			
	49	208	4.4	III	34.80	1013	1148	1125	1890			
	45	225	3.9	III	37.73	1037	1148	1125	1890			
	41	250	3.0	III	41.85	1069	1148	1125	1890			
	34	296	3.0	III	49.65	1125	1148	1125	1890			
	29	354	2.8	III	59.33	1125	1148	1125	1890			
	21	487	1.2	I	81.71	1125	1148	1125	1890			
	26	394	3.1	III	65.99	1197	1125	1658	1125	SK 0282NB - 63S/4	26	318
	21	474	2.4	III	79.40	1193	1125	1656	1125			
	20	511	2.4	III	85.72	1190	1125	1654	1125			
	16	615	1.9	II	103.12	1181	1125	1647	1125			
	12	830	1.2	I	139.16	1159	1125	1634	1125			
	355	29	26.1	III	4.79	581	1053	1613	1609	SK 1282 - 63S/4	39	330
	311	33	25.3	III	5.47	605	1116	1676	1609			
	264	38	24.4	III	6.43	639	1199	1760	1609			
	235	43	23.5	III	7.24	664	1260	1825	1609			
	207	49	26.1	III	8.21	693	1328	1895	1609			
	206	49	22.6	III	8.24	693	1328	1897	1609			
	185	55	24.4	III	9.18	720	1395	1958	1609			
	164	62	23.5	III	10.34	747	1467	2030	1609			
	145	70	22.6	III	11.76	781	1546	2108	1609			
	120	84	22.1	III	14.11	826	1609	2174	1609			
	99	103	19.3	III	17.21	880	1609	2174	1609			
	83	123	16.2	III	20.57	934	1609	2174	1609			
	67	150	13.2	III	25.22	997	1609	2174	1609			
	60	169	11.8	III	28.33	1037	1609	2174	1609			
	53	191	10.6	III	32.08	1080	1609	2174	1609			
	37	276	6.3	III	46.19	1206	1609	2171	1609			
	31	330	6.3	III	55.39	1278	1609	2171	1609			
	26	395	6.0	III	66.23	1350	1609	2171	1609			
	21	484	5.4	III	81.17	1436	1609	2169	1609			
	18	552	3.7	III	92.48	1496	1609	2167	1609			
	16	653	2.8	III	109.50	1557	1609	2162	1609			
	16	633	5.2	III	106.08	1625	1609	1800	2363	SK 1382NB - 63S/4	52	324
	14	705	4.6	III	118.16	1620	1609	1800	2363			
	12	815	4.0	III	136.60	1616	1609	1800	2363			
	11	943	3.5	III	158.12	1607	1609	1800	2363			
	8.3	1215	2.7	III	203.60	1586	1609	1800	2363			
	6.6	1535	2.1	III	257.32	1557	1609	1800	2363			
	5.6	1801	1.8	II	301.82	1526	1609	1800	2363			
	4.5	2276	1.4	II	381.45	1454	1609	1800	2363			

(AGMA Class I = f_B 1.0 - 1.39 II = f_B 1.4 - 1.99 III = f_B ≥ 2.0 * = f_B < 1.0)

Send Quote Requests to info@automatedpt.com
Call +1(800)985-6929 To Order or Order Online At Nordgearmotors.com

NORD DRIVESYSTEMS

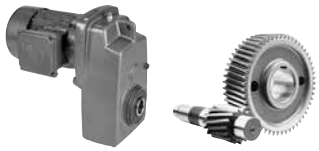

0.16 hp, 0.25 hp Gearmotors

Motor Power P_n [hp]	Output Speed n_2 [rpm]	Output Torque T_2 [lb-in]	Service Factor f_B	AGMA Class	Gear Ratio i_{tot}	Standard Bearings F_{RN} OHL [lb]	Standard Bearings F_{AN} Thrust [lb]	Heavy Duty Bearings (VL) F_{RVL} OHL [lb]	Heavy Duty Bearings (VL) F_{AVL} Thrust [lb]	Model Type	Weight [lb]	Dim. Page
0.16	4.2	1614	1.6	II	405.75	1478	1609	2108	1609	**SK 1282/02 - 63S/4**	56	374
	3.1	2174	1.2	I	546.50	1400	1609	2052	1609			
	2.6	2640	1.0	I	663.69	1310	1609	1991	1609			
	2.1	3208	0.8	*	826.23	1161	1609	1899	1609			
	1.6	3208	0.8	*	1066.50	1161	1609	1899	1609			
	1.2	3208	0.8	*	1362.13	1161	1609	1899	1609			
	1	3208	0.8	*	1620.65	1161	1609	1899	1609			
	9.2	1104	4.2	III	185.11	2252	2700	3150	3375	**SK 2382 - 63S/4**	78	334
	7.2	1409	3.0	III	236.11	2237	2700	3139	3375			
	6.2	1648	3.0	III	276.27	2223	2700	3130	3375			
	5.1	1971	2.5	III	330.45	2201	2700	3114	3375			
	4.3	2332	2.0	III	390.93	2171	2700	3092	3375			
	3.5	2879	1.6	II	482.56	2115	2700	3053	3375			
	2.7	3717	1.2	I	623.10	2003	2700	2977	3375			
	2.2	4554	0.9	*	763.41	1854	2700	2878	3375			
	2.1	3280	1.4	II	824.77	2066	2700	3020	3375	**SK 2282/02 - 63S/4**	81	374
	1.6	4235	1.1	I	1064.71	1915	2700	2918	3375			
	1.2	5753	0.8	*	1423.06	1550	2700	2693	3375			
	0.98	5753	0.8	*	1728.15	1550	2700	2693	3375			
	4.2	2438	2.9	III	408.58	3659	3263	5121	4500	**SK 3382 - 63S/4**	114	338
	3.5	2879	2.7	III	482.56	3643	3263	5108	4500			
	2.9	3485	2.5	III	584.13	3616	3263	5090	4500			
	2.3	4335	1.9	II	726.61	3569	3263	5056	4500			
	2.1	4823	1.9	II	808.42	3537	3263	5033	4500			
	1.8	5483	1.3	I	919.00	3488	3263	5000	4500			
	1.7	6100	1.1	I	1022.42	3436	3263	4964	4500			
	1.6	4248	1.9	II	1067.99	3573	3263	5060	4500	**SK 3282/12 - 63S/4**	118	374
	1.3	5314	1.5	II	1335.98	3501	3263	5009	4500			
	1	6751	1.2	I	1697.29	3373	3263	4921	4500			
	2.4	2780	5.7	III	698.96	4959	4950	6905	6750	**SK 4282/12 - 63S/4**	151	374
	1.9	3473	4.6	III	873.31	4943	4950	6896	6750			
	1.5	4418	3.6	III	1110.82	4919	4950	6878	6750			
	1.3	5344	3.0	III	1343.53	4889	4950	6856	6750			
0.25	396	40	12.0	III	4.24	515	821	1125	1890	**SK 0182NB - 63L/4**	18	312
	315	51	11.8	III	5.34	556	909	1125	1890			
	265	61	11.8	III	6.35	587	974	1125	1890			
	231	69	10.5	III	7.26	612	1031	1125	1890			
	194	83	10.5	III	8.64	648	1112	1125	1890			
	177	91	10.5	III	9.49	666	1148	1125	1890			
	144	111	8.7	III	11.66	711	1148	1125	1890			
	121	132	7.4	III	13.84	752	1148	1125	1890			
	102	158	5.6	III	16.53	794	1148	1125	1890			
	113	143	4.7	III	14.92	765	1148	1125	1890			
	89	180	4.7	III	18.79	821	1148	1125	1890			
	75	214	4.5	III	22.35	869	1148	1125	1890			
	68	235	4.4	III	24.55	893	1148	1125	1890			
	58	278	3.5	III	29.13	943	1148	1125	1890			
	53	304	2.8	III	31.81	963	1148	1125	1890			
	48	333	2.7	III	34.80	990	1148	1125	1890			
	45	361	2.5	III	37.73	1010	1148	1125	1890			
	40	400	1.9	II	41.85	1040	1148	1125	1890			
	34	475	1.9	II	49.65	1091	1148	1125	1890			
	28	567	1.7	II	59.33	1125	1148	1125	1890			

(AGMA Class I = f_B 1.0 - 1.39 II = f_B 1.4 - 1.99 III = f_B ≥ 2.0 * = f_B < 1.0)

Send Quote Requests to info@automatedpt.com
Call +1(800)985-6929 To Order or Order Online At Nordgearmotors.com

0.25 hp Gearmotors



DRIVESYSTEMS

Motor Power P_n [hp]	Output Speed n_2 [rpm]	Output Torque T_2 [lb-in]	Service Factor f_B	AGMA Class	Gear Ratio i_{tot}	Standard Bearings F_{RN} OHL [lb]	Standard Bearings F_{AN} Thrust [lb]	Heavy Duty Bearings (VL) F_{RVL} OHL [lb]	Heavy Duty Bearings (VL) F_{AVL} Thrust [lb]	Model Type	Weight [lb]	Dim. Page
0.25	25	631	2.0	III	65.99	1163	1125	1647	1125	SK 0282NB - 63L/4	27	318
	21	759	1.5	II	79.40	1168	1125	1638	1125			
	20	819	1.5	II	85.72	1161	1125	1634	1125			
	16	986	1.2	I	103.12	1139	1125	1618	1125			
	351	46	16.3	III	4.79	578	1055	1616	1609	SK 1282 - 63L/4	40	330
	307	52	15.8	III	5.47	605	1116	1681	1609			
	261	61	15.2	III	6.43	639	1199	1764	1609			
	232	69	14.7	III	7.24	664	1260	1832	1609			
	205	78	16.3	III	8.21	691	1325	1897	1609			
	204	79	14.1	III	8.24	691	1325	1899	1609			
	183	88	15.2	III	9.18	716	1388	1964	1609			
	162	99	14.7	III	10.34	745	1467	2032	1609			
	143	112	14.1	III	11.76	776	1544	2108	1609			
	119	135	13.8	III	14.11	824	1609	2174	1609			
	98	165	12.1	III	17.21	875	1609	2174	1609			
	82	197	10.1	III	20.57	927	1609	2174	1609			
	67	241	8.3	III	25.22	990	1609	2174	1609			
	59	271	7.4	III	28.33	1026	1609	2171	1609			
	52	307	6.6	III	32.08	1067	1609	2171	1609			
	36	442	3.9	III	46.19	1186	1609	2169	1609			
	30	529	3.9	III	55.39	1253	1609	2167	1609			
	25	633	3.8	III	66.23	1325	1609	2165	1609			
	21	776	3.4	III	81.17	1404	1609	2160	1609			
	18	884	2.3	III	92.48	1456	1609	2156	1609			
	15	1047	1.8	II	109.50	1523	1609	2147	1609			
	14	1129	2.9	III	118.16	1593	1609	1800	2363	SK 1382NB - 63L/4	53	324
	12	1306	2.5	III	136.60	1580	1609	1800	2363			
	11	1511	2.2	III	158.12	1559	1609	1800	2363			
	8.3	1946	1.7	II	203.6	1505	1609	1800	2363			
	6.5	2460	1.3	I	257.32	1422	1609	1800	2363			
	5.6	2885	1.1	I	301.82	1332	1609	1800	2363			
	4.4	3646	0.9	*	381.45	1109	1609	1800	2363			
	5.1	2475	1.0	I	328.02	1343	1609	2014	1609	SK 1282/02 - 63L/4	58	374
	4.1	3062	0.8	*	405.75	1204	1609	1924	1609			
	20	786	6.3	III	82.22	2261	2700	3157	3375	SK 2382 - 63L/4	80	334
	17	940	5.3	III	98.35	2257	2700	3155	3375			
	14	1112	4.1	III	116.35	2250	2700	3148	3375			
	13	1260	3.7	III	131.86	2243	2700	3143	3375			
	11	1433	3.2	III	149.96	2237	2700	3139	3375			
	9.1	1769	2.6	III	185.11	2216	2700	3123	3375			
	7.1	2257	1.9	II	236.11	2178	2700	3096	3375			
	6.1	2641	1.9	II	276.27	2142	2700	3071	3375			
	5.1	3159	1.6	II	330.45	2081	2700	3031	3375			
	4.3	3737	1.2	I	390.93	2000	2700	2975	3375			
	3.5	4613	1.0	I	482.56	1841	2700	2871	3375			
	2.7	5956	0.8	*	623.10	1483	2700	2655	3375			
	3.3	3883	1.2	I	514.51	1978	2700	2959	3375	SK 2282/02 - 63L/4	82	374
	2.5	5003	0.9	*	662.92	1753	2700	2815	3375			
	8.8	1823	4.2	III	190.69	3677	3263	5132	4500	SK 3382 - 63L/4	115	338
	7.3	2206	4.0	III	230.83	3665	3263	5126	4500			
	5.9	2745	3.0	III	287.14	3647	3263	5112	4500			

(AGMA Class I = f_B 1.0 - 1.39 II = f_B 1.4 - 1.99 III = f_B ≥ 2.0 * = f_B < 1.0)

Send Quote Requests to info@automatedpt.com
Call +1(800)985-6929 To Order or Order Online At Nordgearmotors.com

DRIVESYSTEMS



0.25 hp, 0.33 hp Gearmotors

Motor Power P_n [hp]	Output Speed n_2 [rpm]	Output Torque T_2 [lb-in]	Service Factor f_B	AGMA Class	Gear Ratio i_{tot}	Standard Bearings F_{RN} OHL [lb]	Standard Bearings F_{AN} Thrust [lb]	Heavy Duty Bearings (VL) F_{RVL} OHL [lb]	Heavy Duty Bearings (VL) F_{AVL} Thrust [lb]	Model Type	Weight [lb]	Dim. Page
0.25	4.1	3905	1.8	II	408.58	3593	3263	5074	4500	**SK 3382 - 63L/4**	115	338
	3.5	4613	1.7	II	482.56	3551	3263	5045	4500			
	2.9	5583	1.6	II	584.13	3479	3263	4993	4500			
	2.3	6945	1.2	I	726.61	3353	3263	4907	4500			
	2.1	7727	1.2	I	808.42	3265	3263	4847	4500			
	1.8	8784	0.8	*	919.00	3128	3263	4754	4500			
	1.6	8059	1.0	I	1067.99	3224	3263	4820	4500	**SK 3282/12 - 63L/4**	120	374
	1.3	10082	0.8	*	1335.98	2921	3263	4624	4500			
	4.9	2572	6.2	III	340.87	4961	4950	6908	6750	**SK 4282/12 - 63L/4**	153	374
	4.1	3093	5.1	III	409.92	4952	4950	6901	6750			
	3	4215	3.8	III	558.54	4925	4950	6883	6750			
	2.4	5274	3.0	III	698.96	4892	4950	6858	6750			
	1.9	6590	2.4	III	873.31	4840	4950	6822	6750			
	1.5	8382	1.9	II	1110.82	4750	4950	6757	6750			
	1.3	10139	1.6	II	1343.53	4637	4950	6678	6750			
0.33	403	52	9.2	III	4.24	509	812	1125	1890	**SK 0182NB - 71S/4**	21	312
	320	66	9.1	III	5.34	549	893	1125	1890			
	269	78	9.1	III	6.35	581	961	1125	1890			
	236	90	8.1	III	7.26	603	1015	1125	1890			
	198	107	8.1	III	8.64	637	1091	1125	1890			
	180	117	8.1	III	9.49	657	1136	1125	1890			
	147	144	6.8	III	11.66	700	1148	1125	1890			
	124	171	5.7	III	13.84	740	1148	1125	1890			
	103	204	4.3	III	16.53	779	1148	1125	1890			
	115	184	3.6	III	14.92	749	1148	1125	1890			
	91	232	3.6	III	18.79	803	1148	1125	1890			
	77	276	3.5	III	22.35	846	1148	1125	1890			
	70	303	3.4	III	24.55	871	1148	1125	1890			
	59	360	2.7	III	29.13	916	1148	1125	1890			
	54	393	2.1	III	31.81	938	1148	1125	1890			
	49	430	2.1	III	34.80	965	1148	1125	1890			
	45	466	1.9	II	37.73	983	1148	1125	1890			
	41	517	1.5	II	41.85	1006	1148	1125	1890			
	34	613	1.4	II	49.65	1058	1148	1125	1890			
	29	733	1.3	I	59.33	1103	1148	1125	1890			
	42	499	2.9	III	40.38	986	1125	1654	1125	**SK 0282NB - 71S/4**	30	318
	39	546	2.7	III	44.22	1010	1125	1652	1125			
	33	638	2.0	III	51.64	1055	1125	1647	1125			
	30	699	2.0	III	56.55	1082	1125	1643	1125			
	26	815	1.5	II	65.99	1127	1125	1634	1125			
	22	981	1.2	I	79.40	1141	1125	1618	1125			
	20	1059	1.2	I	85.72	1127	1125	1611	1125			
	17	1274	0.9	*	103.12	1091	1125	1584	1125			
	357	59	12.6	III	4.79	574	1042	1607	1609	**SK 1282 - 71S/4**	43	330
	313	68	12.2	III	5.47	599	1105	1672	1609			
	266	79	11.8	III	6.43	630	1179	1751	1609			
	236	89	11.4	III	7.24	657	1242	1814	1609			
	208	101	12.6	III	8.21	684	1314	1888	1609			
	208	102	10.9	III	8.24	684	1314	1888	1609			
	186	113	11.8	III	9.18	709	1373	1946	1609			
	165	128	11.4	III	10.34	736	1442	2016	1609			

(AGMA Class I = f_B 1.0 - 1.39 II = f_B 1.4 - 1.99 III = f_B ≥ 2.0 * = f_B < 1.0)

Send Quote Requests to info@automatedpt.com
Call +1(800)985-6929 To Order or Order Online At Nordgearmotors.com

0.33 hp Gearmotors



DRIVESYSTEMS

Motor Power P_n [hp]	Output Speed n_2 [rpm]	Output Torque T_2 [lb-in]	Service Factor f_B	AGMA Class	Gear Ratio i_{tot}	Standard Bearings F_{RN} OHL [lb]	Standard Bearings F_{AN} Thrust [lb]	Heavy Duty Bearings (VL) F_{RVL} OHL [lb]	Heavy Duty Bearings (VL) F_{AVL} Thrust [lb]	Model Type	Weight [lb]	Dim. Page
0.33	145	145	10.9	III	11.76	765	1523	2095	1609	SK 1282 - 71S/4	43	330
	121	174	10.7	III	14.11	812	1609	2174	1609			
	99	213	9.3	III	17.21	864	1609	2174	1609			
	83	254	7.8	III	20.57	914	1609	2174	1609			
	68	312	6.4	III	25.22	974	1609	2171	1609			
	60	350	5.7	III	28.33	1008	1609	2171	1609			
	53	396	5.1	III	32.08	1046	1609	2171	1609			
	37	571	3.0	III	46.19	1161	1609	2167	1609			
	31	684	3.0	III	55.39	1224	1609	2162	1609			
	26	818	2.9	III	66.23	1289	1609	2158	1609			
	21	1003	2.6	III	81.17	1364	1609	2149	1609			
	18	1143	1.8	II	92.48	1411	1609	2142	1609			
	16	1353	1.4	II	109.5	1472	1609	2129	1609			
	19	1099	3.0	III	88.94	1595	1609	1800	2363	SK 1382NB - 71S/4	56	324
	17	1250	2.6	III	101.14	1584	1609	1800	2363			
	16	1311	2.5	III	106.08	1580	1609	1800	2363			
	14	1460	2.2	III	118.16	1564	1609	1800	2363			
	13	1688	1.9	II	136.60	1539	1609	1800	2363			
	11	1954	1.7	II	158.12	1505	1609	1800	2363			
	8.4	2516	1.3	I	203.6	1411	1609	1800	2363			
	6.6	3180	1.0	I	257.32	1256	1609	1800	2363			
	5.7	3729	0.9	*	301.82	1078	1609	1800	2363			
	25	861	4.6	III	69.67	2259	2700	3155	3375	SK 2282 - 71S/4	67	332
	21	1018	4.1	III	82.42	2255	2700	3152	3375			
	17	1248	3.1	III	100.98	2246	2700	3146	3375			
	16	1286	2.7	III	104.07	2243	2700	3143	3375			
	13	1576	2.1	III	127.51	2228	2700	3132	3375			
	13	1629	2.8	III	131.86	2225	2700	3130	3375	SK 2382 - 71S/4	82	334
	11	1853	2.5	III	149.96	2210	2700	3119	3375			
	9.2	2287	2.0	III	185.11	2176	2700	3096	3375			
	7.2	2917	1.4	II	236.11	2111	2700	3051	3375			
	6.2	3414	1.4	II	276.27	2048	2700	3006	3375			
	5.2	4083	1.2	I	330.45	1942	2700	2936	3375			
	4.4	4830	1.0	I	390.93	1793	2700	2840	3375			
	3.5	5963	0.8	*	482.56	1481	2700	2653	3375			
	11	1995	3.5	III	161.46	3643	3263	5130	4500	SK 3382 - 71S/4	118	338
	9	2356	3.3	III	190.69	3661	3263	5121	4500			
	7.4	2852	3.1	III	230.83	3643	3263	5110	4500			
	6	3548	2.3	III	287.14	3611	3263	5087	4500			
	4.2	5049	1.4	II	408.58	3521	3263	5022	4500			
	3.5	5963	1.3	I	482.56	3447	3263	4973	4500			
	2.9	7218	1.2	I	584.13	3323	3263	4887	4500			
	2.4	8978	0.9	*	726.61	3098	3263	4736	4500			
	2.1	9989	0.9	*	808.42	2939	3263	4633	4500			
	5.2	4038	4.1	III	326.81	4930	4950	6885	6750	SK 4382 - 71S/4	166	342
	4.4	4828	3.7	III	390.76	4907	4950	6869	6750			
	3.8	5501	2.7	III	445.23	4885	4950	6851	6750			
	3.2	6579	2.7	III	532.44	4840	4950	6822	6750			
	2.6	8084	1.3	I	654.27	4766	4950	6768	6750			
	2.2	9667	1.4	II	782.32	4669	4950	6701	6750			
	1.5	13962	1.0	I	1129.91	4302	4950	6451	6750			

(AGMA Class I = f_B 1.0 - 1.39 II = f_B 1.4 - 1.99 III = f_B ≥ 2.0 * = f_B < 1.0)

Send Quote Requests to info@automatedpt.com
Call +1(800)985-6929 To Order or Order Online At Nordgearmotors.com

DRIVESYSTEMS



0.33 hp, 0.5 hp Gearmotors

Motor Power P_n [hp]	Output Speed n_2 [rpm]	Output Torque T_2 [lb-in]	Service Factor f_B	AGMA Class	Gear Ratio i_{tot}	Standard Bearings F_{RN} OHL [lb]	Standard Bearings F_{AN} Thrust [lb]	Heavy Duty Bearings (VL) F_{RVL} OHL [lb]	Heavy Duty Bearings (VL) F_{AVL} Thrust [lb]	Model Type	Weight [lb]	Dim. Page
0.33	2	9064	1.8	II	873.31	4709	4950	6728	6750	**SK 4282/12 - 71S/4**	155	374
	1.5	11530	1.4	II	1110.82	4529	4950	6604	6750			
	1.3	13945	1.1	I	1343.53	4304	4950	6451	6750			
	3.1	5718	4.6	III	550.94	7128	7200	10022	9000	**SK 5282/12 - 71S/4**	235	374
	2.5	7156	3.7	III	689.45	7097	7200	9999	9000			
	2	8952	3.0	III	862.46	7047	7200	9963	9000			
	1.6	11373	2.3	III	1095.71	6962	7200	9902	9000			
	0.95	18742	1.4	II	1805.75	6563	7200	9628	9000			
0.5	406	78	6.1	III	4.24	504	799	1125	1890	**SK 0182NB - 71L/4**	23	312
	322	97	6.2	III	5.34	540	882	1125	1890			
	271	115	6.2	III	6.35	572	945	1125	1890			
	237	132	5.5	III	7.26	594	995	1125	1890			
	199	157	5.5	III	8.64	626	1069	1125	1890			
	181	173	5.5	III	9.49	644	1112	1125	1890			
	148	212	4.6	III	11.66	684	1148	1125	1890			
	124	252	3.9	III	13.84	720	1148	1125	1890			
	104	301	2.9	III	16.53	756	1148	1125	1890			
	115	271	2.4	III	14.92	727	1148	1125	1890			
	92	342	2.5	III	18.79	779	1148	1125	1890			
	77	406	2.4	III	22.35	817	1148	1125	1890			
	70	446	2.3	III	24.55	837	1148	1125	1890			
	59	530	1.8	II	29.13	878	1148	1125	1890			
	54	578	1.5	II	31.81	893	1148	1125	1890			
	49	633	1.4	II	34.80	916	1148	1125	1890			
	46	686	1.3	I	37.73	932	1148	1125	1890			
	41	761	1.0	I	41.85	950	1148	1125	1890			
	35	903	1.0	I	49.65	988	1148	1125	1890			
	29	1079	0.9	*	59.33	1022	1148	1125	1890			
	76	413	2.8	III	22.70	812	1125	1658	1125	**SK 0282NB - 71L/4**	32	318
	66	472	2.4	III	25.96	844	1125	1656	1125			
	57	546	2.1	III	30.03	880	1125	1652	1125			
	50	621	2.2	III	34.16	902	1125	1647	1125			
	43	734	2.0	III	40.38	945	1125	1640	1125			
	39	804	1.8	II	44.22	968	1125	1636	1125			
	33	939	1.4	II	51.64	1004	1125	1622	1125			
	30	1028	1.4	II	56.55	1026	1125	1613	1125			
	26	1200	1.0	I	65.99	1064	1125	1595	1125			
	22	1444	0.8	*	79.40	1055	1125	1562	1125			
	20	1558	0.8	*	85.72	1028	1125	1544	1125			
	359	87	8.6	III	4.79	569	1033	1598	1609	**SK 1282 - 71L/4**	45	330
	314	99	8.3	III	5.47	594	1094	1663	1609			
	267	117	8.0	III	6.43	623	1166	1744	1609			
	238	132	7.7	III	7.24	648	1226	1805	1609			
	210	149	8.6	III	8.21	677	1298	1874	1609			
	209	150	7.4	III	8.24	675	1292	1874	1609			
	187	167	8.0	III	9.18	700	1355	1937	1609			
	166	188	7.7	III	10.34	727	1422	2005	1609			
	146	214	7.4	III	11.76	756	1501	2081	1609			
	122	257	7.2	III	14.11	799	1609	2174	1609			
	100	313	6.3	III	17.21	848	1609	2171	1609			
	84	374	5.3	III	20.57	898	1609	2171	1609			
	68	459	4.3	III	25.22	952	1609	2169	1609			

(AGMA Class I = f_B 1.0 - 1.39 II = f_B 1.4 - 1.99 III = f_B ≥ 2.0 * = f_B < 1.0)

Send Quote Requests to info@automatedpt.com
Call +1(800)985-6929 To Order or Order Online At Nordgearmotors.com

0.5 hp Gearmotors



DRIVESYSTEMS

Motor Power P_n [hp]	Output Speed n_2 [rpm]	Output Torque T_2 [lb-in]	Service Factor f_B	AGMA Class	Gear Ratio i_{tot}	Standard Bearings F_{RN} OHL [lb]	Standard Bearings F_{AN} Thrust [lb]	Heavy Duty Bearings (VL) F_{RVL} OHL [lb]	Heavy Duty Bearings (VL) F_{AVL} Thrust [lb]	Model Type	Weight [lb]	Dim. Page
0.5	61	515	3.9	III	28.33	986	1609	2167	1609	SK 1282 - 71L/4	45	330
	54	583	3.5	III	32.08	1019	1609	2165	1609			
	42	747	2.6	III	41.07	1085	1609	2160	1609			
	37	840	2.1	III	46.19	1118	1609	2156	1609			
	35	895	2.6	III	49.25	1143	1609	2153	1609			
	31	1007	2.1	III	55.39	1175	1609	2149	1609			
	29	1071	2.3	III	58.89	1197	1609	2144	1609			
	26	1204	2.0	III	66.23	1231	1609	2138	1609			
	24	1312	2.0	III	72.17	1258	1609	2131	1609			
	21	1476	1.8	II	81.17	1298	1609	2120	1609			
	19	1681	1.2	I	92.48	1332	1609	2102	1609			
	25	1240	2.6	III	68.23	1539	1609	1800	2363	SK 1382NB - 71L/4	58	324
	22	1436	2.3	III	78.99	1566	1609	1800	2363			
	19	1617	2.0	III	88.94	1548	1609	1800	2363			
	17	1839	1.8	II	101.14	1521	1609	1800	2363			
	16	1929	1.7	II	106.08	1508	1609	1800	2363			
	15	2148	1.5	II	118.16	1476	1609	1800	2363			
	13	2484	1.3	I	136.60	1418	1609	1800	2363			
	11	2875	1.1	I	158.12	1334	1609	1800	2363			
	8.4	3702	0.9	*	203.6	1089	1609	1800	2363			
	25	1267	3.1	III	69.67	2243	2700	3143	3375	SK 2282 - 71L/4	69	332
	21	1498	2.8	III	82.42	2232	2700	3134	3375			
	17	1836	2.1	III	100.98	2212	2700	3121	3375			
	17	1892	1.9	II	104.07	2207	2700	3119	3375			
	13	2318	1.5	II	127.51	2174	2700	3094	3375			
	13	2397	1.9	II	131.86	2165	2700	3089	3375	SK 2382 - 71L/4	84	334
	11	2726	1.7	II	149.96	2133	2700	3065	3375			
	9.3	3366	1.4	II	185.11	2054	2700	3011	3375			
	7.3	4293	1.0	I	236.11	1906	2700	2912	3375			
	6.2	5023	1.0	I	276.27	1748	2700	2813	3375			
	5.2	6008	0.8	*	330.45	1467	2700	2646	3375			
	17	1834	3.9	III	100.88	3101	3263	5132	4500	SK 3282 - 71L/4	102	336
	15	2040	3.3	III	112.23	3202	3263	5130	4500			
	14	2308	3.0	III	126.93	3310	3263	5123	4500	SK 3382 - 71L/4	120	338
	11	2936	2.4	III	161.46	3535	3263	5108	4500			
	9	3467	2.2	III	190.69	3616	3263	5090	4500			
	7.5	4197	2.1	III	230.83	3575	3263	5063	4500			
	6	5221	1.6	II	287.14	3508	3263	5013	4500			
	4.2	7428	0.9	*	408.58	3301	3263	4871	4500			
	3.6	8773	0.9	*	482.56	3128	3263	4757	4500			
	2.9	10620	0.8	*	584.13	2824	3263	4561	4500			
	6.3	4955	2.8	III	272.54	4903	4950	6865	6750	SK 4382 - 71L/4	168	342
	5.3	5942	2.8	III	326.81	4867	4950	6840	6750			
	4.4	7104	2.5	III	390.76	4817	4950	6804	6750			
	3.9	8095	1.8	II	445.23	4766	4950	6768	6750			
	3.2	9680	1.8	II	532.44	4669	4950	6701	6750			
	2.6	11895	0.9	*	654.27	4500	4950	6584	6750			
	2.2	14223	0.9	*	782.32	4275	4950	6433	6750			
	2	14161	1.1	I	873.31	4282	4950	6437	6750	SK 4282/12 - 71L/4	157	374
	1.5	18013	0.9	*	1110.82	3782	4950	6116	6750			

(AGMA Class I = f_B 1.0 - 1.39 II = f_B 1.4 - 1.99 III = f_B ≥ 2.0 * = f_B < 1.0)

Send Quote Requests to info@automatedpt.com
Call +1(800)985-6929 To Order or Order Online At Nordgearmotors.com

NORD DRIVESYSTEMS



0.5 hp, 0.75 hp Gearmotors

Motor Power P_n [hp]	Output Speed n_2 [rpm]	Output Torque T_2 [lb-in]	Service Factor f_B	AGMA Class	Gear Ratio i_{tot}	Standard Bearings F_{RN} OHL [lb]	Standard Bearings F_{AN} Thrust [lb]	Heavy Duty Bearings (VL) F_{RVL} OHL [lb]	Heavy Duty Bearings (VL) F_{AVL} Thrust [lb]	Model Type	Weight [lb]	Dim. Page
0.5	3.8	7267	3.7	III	448.15	7094	7200	9997	9000	**SK 5282/12 - 71L/4**	237	374
	3.1	8934	3.0	III	550.94	7047	7200	9963	9000			
	2.5	11180	2.4	III	689.45	6971	7200	9909	9000			
	2	13985	1.9	II	862.46	6845	7200	9821	9000			
	1.6	17768	1.5	II	1095.71	6629	7200	9673	9000			
	1.3	21642	1.2	I	1334.62	6343	7200	9479	9000			
	0.95	29281	0.9	*	1805.75	5549	7200	8966	9000			
0.75	403	117	4.1	III	4.24	493	788	1125	1890	**SK 0182NB - 80S/4**	26	312
	320	148	4.1	III	5.34	529	864	1125	1890			
	269	176	4.1	III	6.35	558	927	1125	1890			
	236	201	3.6	III	7.26	578	974	1125	1890			
	198	239	3.6	III	8.64	610	1042	1125	1890			
	180	263	3.6	III	9.49	626	1080	1125	1890			
	147	323	3.0	III	11.66	662	1148	1125	1890			
	124	383	2.5	III	13.84	693	1148	1125	1890			
	103	458	1.9	II	16.53	727	1148	1125	1890			
	115	413	1.6	II	14.92	693	1148	1125	1890			
	91	520	1.6	II	18.79	738	1148	1125	1890			
	77	619	1.6	II	22.35	772	1148	1125	1890			
	70	680	1.5	II	24.55	785	1148	1125	1890			
	59	806	1.2	I	29.13	817	1148	1125	1890			
	54	880	1.0	I	31.81	828	1148	1125	1890			
	49	963	0.9	*	34.80	846	1148	1125	1890			
	45	1044	0.8	*	37.73	855	1148	1125	1890			
	103	459	2.7	III	16.58	720	1125	1656	1125	**SK 0282NB - 80S/4**	35	318
	97	487	2.3	III	17.61	731	1125	1656	1125			
	86	552	2.1	III	19.95	756	1125	1652	1125			
	79	597	2.1	III	21.57	772	1125	1649	1125			
	75	628	1.8	II	22.70	783	1125	1647	1125			
	66	719	1.6	II	25.96	808	1125	1640	1125			
	57	831	1.4	II	30.03	839	1125	1634	1125			
	50	945	1.4	II	34.16	853	1125	1622	1125			
	42	1118	1.3	I	40.38	887	1125	1604	1125			
	39	1224	1.2	I	44.22	902	1125	1591	1125			
	33	1429	0.9	*	51.64	925	1125	1564	1125			
	30	1565	0.9	*	56.55	941	1125	1541	1125			
	357	133	5.6	III	4.79	563	1022	1595	1609	**SK 1282 - 80S/4**	49	330
	313	151	5.5	III	5.47	587	1082	1658	1609			
	266	178	5.3	III	6.43	617	1154	1739	1609			
	236	200	5.1	III	7.24	639	1211	1798	1609			
	208	227	5.6	III	8.21	666	1278	1870	1609			
	208	228	4.9	III	8.24	664	1274	1870	1609			
	186	254	5.3	III	9.18	689	1339	1928	1609			
	165	286	5.1	III	10.34	713	1400	1998	1609			
	145	325	4.9	III	11.76	740	1474	2072	1609			
	121	391	4.8	III	14.11	783	1593	2171	1609			
	99	476	4.2	III	17.21	828	1609	2169	1609			
	83	569	3.5	III	20.57	871	1609	2167	1609			
	68	698	2.9	III	25.22	920	1609	2162	1609			
	60	784	2.5	III	28.33	950	1609	2158	1609			
	53	888	2.3	III	32.08	979	1609	2153	1609			
	42	1137	1.7	II	41.07	1028	1609	2142	1609			
	35	1363	1.7	II	49.25	1078	1609	2126	1609			
	29	1630	1.5	II	58.89	1118	1609	2106	1609			
	24	1998	1.3	I	72.17	1166	1609	2072	1609			

(AGMA Class I = f_B 1.0 - 1.39 II = f_B 1.4 - 1.99 III = f_B ≥ 2.0 * = f_B < 1.0)

Send Quote Requests to info@automatedpt.com
Call +1(800)985-6929 To Order or Order Online At Nordgearmotors.com

0.75 hp Gearmotors



DRIVESYSTEMS

Motor Power P_n [hp]	Output Speed n_2 [rpm]	Output Torque T_2 [lb-in]	Service Factor f_B	AGMA Class	Gear Ratio i_{tot}	Standard Bearings F_{RN} OHL [lb]	Standard Bearings F_{AN} Thrust [lb]	Heavy Duty Bearings (VL) F_{RVL} OHL [lb]	Heavy Duty Bearings (VL) F_{AVL} Thrust [lb]	Model Type	Weight [lb]	Dim. Page
0.75	66	720	3.3	III	26.01	1148	1609	1800	2363	SK 1382NB - 80S/4	62	324
	57	825	3.0	III	29.79	1190	1609	1800	2363			
	48	989	2.7	III	35.75	1244	1609	1800	2363			
	44	1073	2.7	III	38.77	1274	1609	1800	2363			
	39	1229	2.4	III	44.40	1314	1609	1800	2363			
	32	1475	2.1	III	53.28	1373	1609	1800	2363			
	29	1661	2.0	III	60.00	1409	1609	1800	2363			
	25	1888	1.7	II	68.23	1447	1609	1800	2363			
	22	2186	1.5	II	78.99	1469	1609	1800	2363			
	19	2462	1.3	I	88.94	1422	1609	1800	2363			
	17	2799	1.2	I	101.14	1350	1609	1800	2363			
	16	2936	1.1	I	106.08	1319	1609	1800	2363			
	14	3270	1.0	I	118.16	1231	1609	1800	2363			
	13	3781	0.9	*	136.60	1060	1609	1800	2363			
	46	1029	4.0	III	37.18	2027	2700	3150	3375	SK 2282 - 80S/4	73	332
	38	1249	3.2	III	45.11	2142	2700	3146	3375			
	32	1494	3.0	III	53.96	2232	2700	3137	3375			
	27	1767	2.6	III	63.83	2216	2700	3123	3375			
	25	1928	2.0	III	69.67	2205	2700	3116	3375			
	21	2281	1.9	II	82.42	2176	2700	3096	3375			
	17	2795	1.4	II	100.98	2126	2700	3060	3375			
	16	2880	1.2	I	104.07	2115	2700	3053	3375			
	13	3529	1.0	I	127.51	2032	2700	2997	3375			
	13	3650	1.3	I	131.86	2014	2700	2984	3375	SK 2382 - 80S/4	88	334
	11	4151	1.1	I	149.96	1931	2700	2930	3375			
	9.2	5124	0.9	*	185.11	1724	2700	2797	3375			
	21	2208	3.4	III	79.76	2822	3263	5126	4500	SK 3282 - 80S/4	106	336
	19	2456	3.4	III	88.74	2912	3263	5119	4500			
	17	2792	2.6	III	100.88	3013	3263	5112	4500			
	15	3106	2.2	III	112.23	3103	3263	5101	4500			
	13	3513	1.9	II	126.93	3184	3263	5090	4500	SK 3382 - 80S/4	123	338
	11	4469	1.6	II	161.46	3375	3263	5051	4500			
	9	5278	1.5	II	190.69	3503	3263	5011	4500			
	7.4	6389	1.4	II	230.83	3409	3263	4946	4500			
	6	7948	1.0	I	287.14	3238	3263	4829	4500			
	14	3277	4.7	III	118.38	4671	4950	6899	6750	SK 4382 - 80S/4	172	342
	12	3892	4.4	III	140.60	4910	4950	6887	6750			
	11	4434	3.3	III	160.20	4919	4950	6878	6750			
	8.9	5302	3.3	III	191.57	4892	4950	6858	6750			
	8.1	5843	2.5	III	211.09	4871	4950	6842	6750			
	6.8	7006	2.5	III	253.12	4822	4950	6809	6750			
	6.3	7543	1.8	II	272.54	4795	4950	6788	6750			
	5.7	8377	2.2	III	302.65	4750	4950	6757	6750			
	5.2	9046	1.8	II	326.81	4709	4950	6730	6750			
	5	9545	1.5	II	344.84	4678	4950	6707	6750			
	4.4	10816	1.6	II	390.76	4588	4950	6644	6750			
	4.1	11414	1.5	II	412.38	4541	4950	6611	6750			
	3.8	12323	1.2	I	445.23	4462	4950	6559	6750			
	3.2	14737	1.2	I	532.44	4219	4950	6395	6750			
	2.8	16770	0.8	*	605.88	3965	4950	6230	6750			

(AGMA Class I = f_B 1.0 - 1.39 II = f_B 1.4 - 1.99 III = f_B ≥ 2.0 * = f_B < 1.0)

Send Quote Requests to info@automatedpt.com
Call +1(800)985-6929 To Order or Order Online At Nordgearmotors.com

DRIVESYSTEMS



0.75 hp, 1.0 hp Gearmotors

Motor Power P_n [hp]	Output Speed n_2 [rpm]	Output Torque T_2 [lb-in]	Service Factor f_B	AGMA Class	Gear Ratio i_{tot}	Standard Bearings F_{RN} OHL [lb]	Standard Bearings F_{AN} Thrust [lb]	Heavy Duty Bearings (VL) F_{RVL} OHL [lb]	Heavy Duty Bearings (VL) F_{AVL} Thrust [lb]	Model Type	Weight [lb]	Dim. Page
0.75	6.3	7473	3.2	III	269.99	7090	7200	9992	9000	**SK 5382 - 80S/4**	260	346
	5.2	9175	3.1	III	331.48	7040	7200	9959	9000			
	4.7	10011	2.5	III	361.69	7013	7200	9938	9000			
	4	11840	2.4	III	427.79	6944	7200	9889	9000			
	3.3	14537	1.9	II	525.20	6818	7200	9801	9000			
	3	15782	1.6	II	570.18	6750	7200	9756	9000			
	2.4	19376	1.5	II	700.03	6518	7200	9596	9000			
	1.8	25919	0.9	*	936.45	5942	7200	9214	9000			
	2	22166	1.2	I	862.46	6300	7200	9448	9000	**SK 5282/12 - 80S/4**	240	374
	1.6	28161	0.9	*	1095.71	5688	7200	9052	9000			
	1.3	34301	0.8	*	1334.62	4802	7200	8523	9000			
	3.9	11187	4.3	III	435.29	9365	10463	13163	13500	**SK 6382/22 - 80S/4**	439	374
	3	14627	3.3	III	569.11	9270	10463	13095	13500			
	2.7	16385	2.9	III	637.53	9212	10463	13055	13500			
	2.1	21042	2.3	III	818.71	9018	10463	12920	13500			
	1.5	28384	1.7	II	1104.39	8606	10463	12634	13500			
	1.4	32365	1.5	II	1259.27	8321	10463	12443	13500			
	1.6	26888	2.3	III	1046.18	12926	13050	18306	18000	**SK 7382/22 - 80S/4**	600	374
	1.3	34530	1.8	II	1343.50	12679	13050	18131	18000			
	1.3	35129	3.0	III	1366.83	20815	16425	22500	22500	**SK 8382/32 - 80S/4**	900	374
	1	43637	2.5	III	1697.85	20664	16425	22500	22500			
1.0	389	162	2.9	III	4.24	488	781	1125	1890	**SK 0182NB - 80L/4**	29	312
	309	205	2.9	III	5.34	524	855	1125	1890	**SK 0182NB - 80LH/4**		
	260	244	2.9	III	6.35	549	918	1125	1890			
	227	279	2.6	III	7.26	567	959	1125	1890			
	191	332	2.6	III	8.64	594	1026	1125	1890			
	174	365	2.6	III	9.49	610	1060	1125	1890			
	142	448	2.2	III	11.66	644	1139	1125	1890			
	119	532	1.8	II	13.84	668	1148	1125	1890			
	100	635	1.4	II	16.53	698	1148	1125	1890			
	111	573	1.2	I	14.92	664	1148	1125	1890			
	88	722	1.2	I	18.79	700	1148	1125	1890			
	74	859	1.1	I	22.35	722	1148	1125	1890			
	67	943	1.1	I	24.55	736	1148	1125	1890			
	57	1119	0.9	*	29.13	756	1148	1125	1890			
	150	422	2.9	III	10.98	630	1125	1658	1125	**SK 0282NB - 80L/4**	37	318
	147	432	2.9	III	11.25	637	1125	1658	1125	**SK 0282NB - 80LH/4**		
	127	499	2.8	III	12.98	657	1125	1654	1125			
	116	546	2.6	III	14.21	675	1125	1652	1125			
	100	637	1.9	II	16.58	702	1125	1647	1125			
	94	677	1.7	II	17.61	716	1125	1645	1125			
	83	766	1.5	II	19.95	734	1125	1638	1125			
	76	829	1.5	II	21.57	745	1125	1634	1125			
	73	872	1.3	I	22.70	754	1125	1629	1125			
	64	997	1.1	I	25.96	774	1125	1618	1125			
	55	1154	1.0	I	30.03	797	1125	1600	1125			
	48	1312	1.0	I	34.16	801	1125	1580	1125			
	41	1551	0.9	*	40.38	824	1125	1544	1125			
	37	1699	0.9	*	44.22	837	1125	1519	1125			

(AGMA Class I = f_B 1.0 - 1.39 II = f_B 1.4 - 1.99 III = f_B ≥ 2.0 * = f_B < 1.0) **(Model Type in blue is an Energy Efficient motor)**

Send Quote Requests to info@automatedpt.com
Call +1(800)985-6929 To Order or Order Online At Nordgearmotors.com

1.0 hp Gearmotors



DRIVESYSTEMS

GEARMOTORS

Motor Power P_n [hp]	Output Speed n_2 [rpm]	Output Torque T_2 [lb-in]	Service Factor f_B	AGMA Class	Gear Ratio i_{tot}	Standard Bearings F_{RN} OHL [lb]	Standard Bearings F_{AN} Thrust [lb]	Heavy Duty Bearings (VL) F_{RVL} OHL [lb]	Heavy Duty Bearings (VL) F_{AVL} Thrust [lb]	Model Type	Weight [lb]	Dim. Page
1.0	344	184	4.1	III	4.79	563	1024	1604	1609	**SK 1282 - 80L/4**	51	330
	302	210	3.9	III	5.47	585	1082	1670	1609	SK 1282 - 80LH/4		
	257	247	3.8	III	6.43	612	1154	1746	1609			
	228	278	3.7	III	7.24	637	1211	1809	1609			
	201	315	4.1	III	8.21	662	1276	1879	1609			
	200	317	3.5	III	8.24	659	1274	1877	1609			
	180	353	3.8	III	9.18	682	1330	1937	1609			
	160	397	3.7	III	10.34	707	1395	2003	1609			
	140	452	3.5	III	11.76	731	1467	2077	1609			
	117	542	3.4	III	14.11	772	1577	2167	1609			
	96	661	3.0	III	17.21	812	1609	2162	1609			
	80	790	2.5	III	20.57	853	1609	2158	1609			
	65	969	2.1	III	25.22	896	1609	2151	1609			
	58	1088	1.8	II	28.33	918	1609	2144	1609			
	51	1232	1.7	II	32.08	943	1609	2135	1609			
	40	1578	1.2	I	41.07	974	1609	2111	1609			
	34	1892	1.2	I	49.25	1013	1609	2084	1609			
	28	2262	1.1	I	58.89	1042	1609	2041	1609			
	23	2773	0.9	*	72.17	1067	1609	1971	1609			
	63	999	2.4	III	26.01	1118	1609	1800	2363	**SK 1382NB - 80L/4**	64	324
	55	1144	2.2	III	29.79	1157	1609	1800	2363	SK 1382NB - 80LH/4		
	46	1373	1.9	II	35.75	1206	1609	1800	2363			
	43	1489	1.9	II	38.77	1226	1609	1800	2363			
	37	1706	1.7	II	44.40	1260	1609	1800	2363			
	31	2047	1.5	II	53.28	1307	1609	1800	2363			
	28	2305	1.4	II	60.00	1330	1609	1800	2363			
	24	2621	1.2	I	68.23	1355	1609	1800	2363			
	21	3035	1.1	I	78.99	1294	1609	1800	2363			
	19	3417	1.0	I	88.94	1186	1609	1800	2363			
	16	3886	0.8	*	101.14	1017	1609	1800	2363			
	16	4075	0.8	*	106.08	932	1609	1800	2363			
	44	1428	2.9	III	37.18	2007	2700	3139	3375	**SK 2282 - 80L/4**	75	332
	37	1733	2.3	III	45.11	2111	2700	3125	3375	SK 2282 - 80LH/4		
	31	2073	2.2	III	53.96	2194	2700	3107	3375			
	26	2452	1.9	II	63.83	2160	2700	3085	3375			
	24	2677	1.5	II	69.67	2138	2700	3069	3375			
	20	3166	1.3	I	82.42	2081	2700	3031	3375			
	16	3879	1.0	I	100.98	1978	2700	2959	3375			
	20	3159	1.6	II	82.22	2081	2700	3031	3375	**SK 2382 - 80L/4**	90	334
	17	3778	1.3	I	98.35	1994	2700	2970	3375	SK 2382 - 80LH/4		
	14	4470	1.0	I	116.35	1870	2700	2889	3375			
	13	5066	0.9	*	131.86	1739	2700	2806	3375			
	11	5761	0.8	*	149.96	1546	2700	2691	3375			
	30	2143	2.7	III	55.79	2507	3263	4878	4500	**SK 3282 - 80L/4**	108	336
	25	2531	2.7	III	65.89	2630	3263	5119	4500	SK 3282 - 80LH/4		
	23	2711	1.8	II	70.56	2673	3263	5114	4500			
	21	3064	2.5	III	79.76	2772	3263	5103	4500			
	19	3409	2.5	III	88.74	2849	3263	5092	4500			
	16	3876	1.8	II	100.88	2936	3263	5076	4500			
	15	4312	1.6	II	112.23	3015	3263	5058	4500			

(AGMA Class I = f_B 1.0 - 1.39 II = f_B 1.4 - 1.99 III = f_B ≥ 2.0 * = f_B < 1.0) **(Model Type in blue is an Energy Efficient motor)**

Send Quote Requests to info@automatedpt.com
Call +1(800)985-6929 To Order or Order Online At Nordgearmotors.com

DRIVESYSTEMS



1.0 hp Gearmotors

Motor Power P_n [hp]	Output Speed n_2 [rpm]	Output Torque T_2 [lb-in]	Service Factor f_B	AGMA Class	Gear Ratio i_{tot}	Standard Bearings F_{RN} OHL [lb]	Standard Bearings F_{AN} Thrust [lb]	Heavy Duty Bearings (VL) F_{RVL} OHL [lb]	Heavy Duty Bearings (VL) F_{AVL} Thrust [lb]	Model Type	Weight [lb]	Dim. Page
1.0	13	4876	1.4	II	126.93	3071	3263	5031	4500	SK 3382 - 80L/4	126	338
	10	6203	1.1	I	161.46	3229	3263	4957	4500	SK 3382 - 80LH/4		
	8.7	7326	1.0	I	190.69	3312	3263	4878	4500			
	7.1	8868	1.0	I	230.83	3114	3263	4748	4500			
	5.7	11031	0.8	*	287.14	2743	3263	4511	4500			
	25	2560	3.8	III	66.65	3913	4950	6908	6750	SK 4382 - 80L/4	174	342
	19	3336	3.6	III	86.83	4228	4950	6899	6750	SK 4382 - 80LH/4		
	16	3988	3.6	III	103.82	4457	4950	6887	6750			
	14	4548	3.4	III	118.38	4626	4950	6876	6750			
	12	5401	3.2	III	140.60	4840	4950	6856	6750			
	10	6154	2.4	III	160.20	4858	4950	6833	6750			
	8.6	7360	2.4	III	191.57	4804	4950	6795	6750			
	7.8	8109	1.8	II	211.09	4766	4950	6768	6750			
	6.5	9724	1.8	II	253.12	4667	4950	6698	6750			
	6.1	10470	1.3	I	272.54	4613	4950	6662	6750			
	5.5	11627	1.6	II	302.65	4523	4950	6599	6750			
	5	12555	1.3	I	326.81	4442	4950	6543	6750			
	4.8	13248	1.1	I	344.84	4374	4950	6500	6750			
	4.2	15012	1.2	I	390.76	4187	4950	6374	6750			
	4	15842	1.1	I	412.38	4086	4950	6309	6750			
	3.7	17104	0.9	*	445.23	3917	4950	6201	6750			
	3.1	20455	0.9	*	532.44	3355	4950	5861	6750			
	8.1	7782	3.3	III	202.57	7081	7200	9988	9000	SK 5382 - 80L/4	262	346
	6.6	9554	3.0	III	248.70	7029	7200	9950	9000	SK 5382 - 80LH/4		
	6.1	10372	2.3	III	269.99	7000	7200	9929	9000			
	5	12734	2.2	III	331.48	6905	7200	9862	9000			
	4.6	13895	1.8	II	361.69	6849	7200	9824	9000			
	3.9	16434	1.7	II	427.79	6712	7200	9729	9000			
	3.1	20177	1.4	II	525.20	6460	7200	9556	9000			
	2.9	21905	1.1	I	570.18	6323	7200	9464	9000			
	2.4	26893	1.1	I	700.03	5837	7200	9146	9000			
	5.5	10854	4.1	III	298.46	9374	10463	13169	13500	SK 6382/22 - 80L/4	441	374
	4.8	12632	3.8	III	347.33	9329	10463	13138	13500	SK 6382/22 - 80LH/4		
	3.8	15831	3.0	III	435.29	9230	10463	13068	13500			
	2.9	20697	2.3	III	569.11	9036	10463	12931	13500			
	2.6	23186	2.1	III	637.53	8912	10463	12845	13500			
	2	29775	1.6	II	818.71	8512	10463	12571	13500			
	1.5	40165	1.2	I	1104.39	7610	10463	11977	13500			
	1.3	45797	1.0	I	1259.27	6944	10463	11565	13500			
	4.4	13684	4.2	III	376.26	13205	13050	18504	18000	SK 7382/22 - 80L/4	602	374
	3.8	15838	4.0	III	435.50	13174	13050	18479	18000	SK 7382/22 - 80LH/4		
	2.9	20729	3.0	III	569.97	13079	13050	18414	18000			
	2.3	25978	2.4	III	714.31	12953	13050	18324	18000			
	1.8	33965	1.8	II	933.91	12699	13050	18144	18000			
	1.6	38048	1.6	II	1046.18	12539	13050	18034	18000			
	1.2	48861	1.3	I	1343.50	12020	13050	17676	18000			
	1.5	38729	2.8	III	1064.91	20756	16425	22500	22500	SK 8382/32 - 80L/4	902	374
	1.2	49709	2.2	III	1366.83	20536	16425	22500	22500	SK 8382/32 - 80LH/4		

(AGMA Class I = f_B 1.0 - 1.39 II = f_B 1.4 - 1.99 III = f_B ≥ 2.0 * = f_B < 1.0) **(Model Type in blue is an Energy Efficient motor)**

Send Quote Requests to info@automatedpt.com
Call +1(800)985-6929 To Order or Order Online At Nordgearmotors.com

1.5 hp Gearmotors



DRIVESYSTEMS

GEARMOTORS

Motor Power P_n [hp]	Output Speed n_2 [rpm]	Output Torque T_2 [lb-in]	Service Factor f_B	AGMA Class	Gear Ratio i_{tot}	Standard Bearings F_{RN} OHL [lb]	Standard Bearings F_{AN} Thrust [lb]	Heavy Duty Bearings (VL) F_{RVL} OHL [lb]	Heavy Duty Bearings (VL) F_{AVL} Thrust [lb]	Model Type	Weight [lb]	Dim. Page
1.5	392	241	2.7	III	4.24	468	747	1125	1890	**SK 0182NB - 90S/4**	35	312
	311	305	2.7	III	5.34	500	817	1125	1890	SK 0182NB - 90SH/4		
	261	362	2.7	III	6.35	522	871	1125	1890			
	412	230	3.3	III	4.03	459	758	1438	1125	**SK 0282NB - 90S/4**	44	318
	356	266	3.2	III	4.66	477	801	1501	1125	SK 0282NB - 90SH/4		
	321	295	3.3	III	5.17	491	835	1550	1125			
	277	342	3.1	III	5.99	511	882	1611	1125			
	258	367	3.0	III	6.44	522	907	1647	1125			
	223	425	2.7	III	7.45	542	954	1658	1125			
	189	502	2.4	III	8.80	567	1015	1654	1125			
	172	550	2.3	III	9.64	581	1049	1652	1125			
	151	626	2.1	III	10.98	594	1089	1647	1125			
	148	642	1.9	II	11.25	603	1109	1647	1125			
	128	740	1.9	II	12.98	617	1125	1640	1125			
	117	810	1.8	II	14.21	632	1125	1634	1125			
	100	945	1.3	I	16.58	650	1125	1622	1125			
	94	1004	1.1	I	17.61	659	1125	1616	1125			
	83	1138	1.0	I	19.95	673	1125	1602	1125			
	347	273	4.1	III	4.79	547	999	1591	1609	**SK 1282 - 90S/4**	57	330
	303	312	4.1	III	5.47	567	1051	1652	1609	SK 1282 - 90SH/4		
	258	367	3.9	III	6.43	592	1116	1728	1609			
	229	413	3.8	III	7.24	612	1168	1791	1609			
	202	468	3.0	III	8.21	639	1235	1856	1609			
	201	470	3.6	III	8.24	635	1224	1854	1609			
	181	523	3.2	III	9.18	655	1287	1913	1609			
	161	590	2.9	III	10.34	675	1339	1976	1609			
	141	671	2.7	III	11.76	698	1400	2045	1609			
	118	805	2.3	III	14.11	731	1499	2158	1609			
	96	981	2.0	III	17.21	763	1609	2149	1609			
	81	1173	1.7	II	20.57	792	1609	2140	1609			
	66	1438	1.4	II	25.22	826	1609	2122	1609			
	59	1615	1.2	I	28.33	842	1609	2108	1609			
	52	1829	1.1	I	32.08	857	1609	2088	1609			
	102	928	2.2	III	16.28	943	1577	1800	2363	**SK 1382NB - 90S/4**	71	324
	89	1069	2.0	III	18.75	974	1609	1800	2363	SK 1382NB - 90SH/4		
	68	1383	1.8	II	24.26	1028	1609	1800	2363			
	64	1483	1.6	II	26.01	1044	1609	1800	2363			
	56	1699	1.5	II	29.79	1069	1609	1800	2363			
	46	2039	1.3	I	35.75	1100	1609	1800	2363			
	43	2211	1.3	I	38.77	1114	1609	1800	2363			
	37	2532	1.2	I	44.40	1127	1609	1800	2363			
	31	3038	1.0	I	53.28	1145	1609	1800	2363			
	28	3421	1.0	I	60.00	1150	1609	1800	2363			
	24	3891	0.8	*	68.23	1015	1609	1800	2363			
	100	943	3.8	III	16.53	1546	2700	2986	3375	**SK 2282 - 90S/4**	82	332
	90	1056	3.7	III	18.51	1595	2700	3085	3375	SK 2282 - 90SH/4		
	76	1249	3.4	III	21.90	1674	2700	3146	3375			
	69	1366	2.8	III	23.96	1721	2700	3141	3375			
	66	1424	3.0	III	24.97	1735	2700	3139	3375			
	62	1530	2.5	III	26.83	1773	2700	3134	3375			
	56	1691	2.6	III	29.65	1818	2700	3128	3375			
	53	1781	2.2	III	31.23	1827	2700	3123	3375			
	45	2084	2.1	III	36.54	1906	2700	3107	3375			

(AGMA Class I = f_B 1.0 - 1.39 II = f_B 1.4 - 1.99 III = f_B ≥ 2.0 * = f_B < 1.0) **(Model Type in blue is an Energy Efficient motor)**

Send Quote Requests to info@automatedpt.com
Call +1(800)985-6929 To Order or Order Online At Nordgearmotors.com

DRIVESYSTEMS

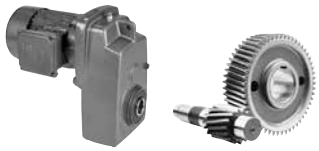

1.5 hp Gearmotors

Motor Power P_n [hp]	Output Speed n_2 [rpm]	Output Torque T_2 [lb-in]	Service Factor f_B	AGMA Class	Gear Ratio i_{tot}	Standard Bearings F_{RN} OHL [lb]	Standard Bearings F_{AN} Thrust [lb]	Heavy Duty Bearings (VL) F_{RVL} OHL [lb]	Heavy Duty Bearings (VL) F_{AVL} Thrust [lb]	Model Type	Weight [lb]	Dim. Page
1.5	45	2120	1.9	II	37.18	1924	2700	3105	3375	SK 2282 - 90S/4	82	332
	38	2493	2.0	III	43.71	1996	2700	3083	3375	SK 2282 - 90SH/4		
	37	2572	1.5	II	45.11	2005	2700	3076	3375			
	32	2949	1.6	II	51.71	2077	2700	3049	3375			
	31	3077	1.5	II	53.96	2093	2700	3038	3375			
	26	3640	1.3	I	63.83	2016	2700	2986	3375			
	24	3973	1.0	I	69.67	1962	2700	2950	3375			
	20	4700	0.9	*	82.42	1823	2700	2858	3375			
	20	4689	1.1	I	82.22	1825	2700	2860	3375	SK 2382 - 90S/4	97	334
	17	5608	0.9	*	98.35	1593	2700	2718	3375	SK 2382 - 90SH/4		
	44	2154	3.4	III	37.77	2185	3263	4318	4500	SK 3282 - 90S/4	115	336
	43	2202	2.5	III	38.62	2176	3263	4325	4500	SK 3282 - 90SH/4		
	40	2396	3.4	III	42.02	2248	3263	4448	4500			
	37	2558	2.6	III	44.85	2270	3263	4509	4500			
	35	2739	1.8	II	48.04	2297	3263	4583	4500			
	31	3021	2.5	III	52.97	2374	3263	4712	4500			
	30	3181	1.8	II	55.79	2396	3263	4775	4500			
	26	3656	2.5	III	64.12	2486	3263	4961	4500			
	25	3757	1.8	II	65.89	2498	3263	4984	4500			
	24	4024	1.2	I	70.56	2520	3263	5069	4500			
	21	4548	1.7	II	79.76	2608	3263	5047	4500			
	19	5060	1.7	II	88.74	2675	3263	5022	4500			
	16	5753	1.2	I	100.88	2734	3263	4984	4500			
	15	6400	1.1	I	112.23	2788	3263	4943	4500			
	18	5162	2.7	III	90.52	4138	4950	6860	6750	SK 4282 - 90S/4	148	340
	15	6317	2.2	III	110.78	4365	4950	6829	6750	SK 4282 - 90SH/4		
	11	8862	1.3	I	155.40	4721	4950	6737	6750			
	12	8018	2.2	III	140.60	4590	4950	6770	6750	SK 4382 - 90S/4	181	342
	10	9135	1.6	II	160.20	4705	4950	6725	6750	SK 4382 - 90SH/4		
	8.7	10924	1.6	II	191.57	4579	4950	6638	6750			
	7.9	12037	1.2	I	211.09	4487	4950	6575	6750			
	6.6	14434	1.2	I	253.12	4253	4950	6417	6750			
	6.1	15541	0.9	*	272.54	4122	4950	6332	6750			
	5.5	17258	1.1	I	302.65	3895	4950	6185	6750			
	5.1	18636	0.9	*	326.81	3683	4950	6055	6750			
	4.2	22283	0.8	*	390.76	2954	4950	5641	6750			
	17	5713	3.5	III	100.19	6073	7200	10022	9000	SK 5282 - 90S/4	227	344
	12	7643	3.1	III	134.03	6602	7200	9990	9000	SK 5282 - 90SH/4		
	14	6693	3.6	III	117.37	6323	7200	10006	9000	SK 5382 - 90S/4	269	346
	12	7916	3.6	III	138.82	6626	7200	9983	9000	SK 5382 - 90SH/4		
	11	8777	3.2	III	153.92	6818	7200	9968	9000			
	9.7	9766	2.5	III	171.27	6998	7200	9945	9000			
	8.2	11551	2.5	III	202.57	6955	7200	9898	9000			
	6.7	14182	2.0	III	248.70	6836	7200	9815	9000			
	6.1	15396	1.6	II	269.99	6773	7200	9770	9000			
	5	18902	1.5	II	331.48	6552	7200	9619	9000			
	4.6	20625	1.2	I	361.69	6426	7200	9533	9000			
	3.9	24394	1.2	I	427.79	6095	7200	9315	9000			
	3.2	29949	0.9	*	525.20	5463	7200	8912	9000			
	2.9	32514	0.8	*	570.18	5094	7200	8692	9000			

(AGMA Class I = f_B 1.0 - 1.39 II = f_B 1.4 - 1.99 III = f_B ≥ 2.0 * = f_B < 1.0) **(Model Type in blue is an Energy Efficient motor)**

Send Quote Requests to info@automatedpt.com
Call +1(800)985-6929 To Order or Order Online At Nordgearmotors.com

1.5 hp, 2.0 hp Gearmotors



DRIVESYSTEMS

Motor Power P_n [hp]	Output Speed n_2 [rpm]	Output Torque T_2 [lb-in]	Service Factor f_B	AGMA Class	Gear Ratio i_{tot}	Standard Bearings F_{RN} OHL [lb]	Standard Bearings F_{AN} Thrust [lb]	Heavy Duty Bearings (VL) F_{RVL} OHL [lb]	Heavy Duty Bearings (VL) F_{AVL} Thrust [lb]	Model Type	Weight [lb]	Dim. Page
1.5	7.4	12875	2.8	III	225.79	9322	10463	13133	13500	**SK 6382 - 90S/4**	406	350
	6.6	14356	2.8	III	251.76	9279	10463	13102	13500	**SK 6382 - 90SH/4**		
	5.2	18093	2.8	III	317.28	9146	10463	13010	13500			
	4.2	22421	2.3	III	393.19	8953	10463	12872	13500			
	3.7	25381	1.5	II	445.09	8793	10463	12762	13500			
	3	31453	1.5	II	551.58	8390	10463	12488	13500			
	2.9	32453	1.5	II	569.11	8314	10463	12438	13500	**SK 6382/22 - 90S/4**	448	374
	2.6	36354	1.3	I	637.53	7983	10463	12220	13500	**SK 6382/22 - 90SH/4**		
	2	46686	1.0	I	818.71	6822	10463	11495	13500			
	1.5	62977	0.8	*	1104.39	3283	10463	9815	13500			
	4.4	21456	2.9	III	376.26	13064	13050	18403	18000	**SK 7382/22 - 90S/4**	609	374
	3.8	24834	2.5	III	435.50	12983	13050	18344	18000	**SK 7382/22 - 90SH/4**		
	2.9	32502	1.9	II	569.97	12751	13050	18180	18000			
	2.3	40733	1.5	II	714.31	12425	13050	17955	18000			
	1.8	53255	1.2	I	933.91	11765	13050	17503	18000			
	1.6	59657	1.1	I	1046.18	11340	13050	17222	18000			
	1.2	76612	0.8	*	1343.5	9860	13050	16283	18000			
	2.3	40968	2.6	III	718.43	20716	16425	22500	22500	**SK 8382/32 - 90S/4**	908	374
	1.9	50820	2.1	III	891.21	20511	16425	22500	22500	**SK 8382/32 - 90SH/4**		
	1.6	60725	1.8	II	1064.91	20259	16425	22500	22500			
	1.2	77942	1.4	II	1366.83	19703	16425	22500	22500			
	0.98	96818	1.1	I	1697.85	18909	16425	22500	22500			
	1.2	80928	2.6	III	1419.2	27000	22950	27000	29250	**SK 9382/42 - 90S/4**	1607	375
	0.95	99645	2.1	III	1747.42	27000	22950	27000	29250	**SK 9382/42 - 90SH/4**		
2.0	412	306	2.5	III	4.03	443	734	1429	1125	**SK 0282NB - 90L/4**	49	318
	356	354	2.4	III	4.66	461	772	1487	1125	**SK 0282NB - 90LH/4**		
	321	392	2.5	III	5.17	475	806	1535	1125			
	277	454	2.4	III	5.99	493	846	1598	1125			
	258	489	2.2	III	6.44	502	871	1631	1125			
	223	565	2.1	III	7.45	520	914	1652	1125			
	189	668	1.8	II	8.80	540	965	1645	1125			
	172	731	1.7	II	9.64	551	995	1640	1125			
	151	833	1.6	II	10.98	558	1026	1631	1125			
	148	853	1.5	II	11.25	567	1044	1631	1125			
	128	985	1.4	II	12.98	576	1078	1618	1125			
	117	1078	1.3	I	14.21	587	1109	1609	1125			
	100	1258	1.0	I	16.58	599	1125	1586	1125			
	94	1336	0.9	*	17.61	605	1125	1577	1125			
	83	1513	0.8	*	19.95	610	1125	1550	1125			
	347	363	3.1	III	4.79	533	972	1577	1609	**SK 1282 - 90L/4**	62	330
	303	415	3.1	III	5.47	551	1022	1636	1609	**SK 1282 - 90LH/4**		
	258	488	3.0	III	6.43	574	1082	1712	1609			
	229	549	2.8	III	7.24	590	1130	1771	1609			
	202	623	2.3	III	8.21	619	1199	1841	1609			
	201	625	2.7	III	8.24	608	1186	1829	1609			
	181	696	2.4	III	9.18	630	1235	1890	1609			
	161	784	2.2	III	10.34	648	1287	1951	1609			
	141	892	2.0	III	11.76	666	1341	2016	1609			
	118	1070	1.7	II	14.11	693	1429	2117	1609			

(AGMA Class I = f_B 1.0 - 1.39 II = f_B 1.4 - 1.99 III = f_B ≥ 2.0 * = f_B < 1.0) **(Model Type in blue is an Energy Efficient motor)**

Send Quote Requests to info@automatedpt.com
Call +1(800)985-6929 To Order or Order Online At Nordgearmotors.com

DRIVESYSTEMS



2.0 hp Gearmotors

Motor Power P_n [hp]	Output Speed n_2 [rpm]	Output Torque T_2 [lb-in]	Service Factor f_B	AGMA Class	Gear Ratio i_{tot}	Standard Bearings F_{RN} OHL [lb]	Standard Bearings F_{AN} Thrust [lb]	Heavy Duty Bearings (VL) F_{RVL} OHL [lb]	Heavy Duty Bearings (VL) F_{AVL} Thrust [lb]	Model Type	Weight [lb]	Dim. Page
2.0	96	1306	1.5	II	17.21	716	1517	2131	1609	SK 1282 - 90L/4 SK 1282 - 90LH/4	62	330
	81	1560	1.3	I	20.57	736	1600	2113	1609			
	66	1913	1.0	I	25.22	754	1609	2081	1609			
	59	2149	0.9	*	28.33	763	1609	2054	1609			
	52	2434	0.8	*	32.08	763	1609	2021	1609			
	102	1235	1.7	II	16.28	898	1492	1800	2363	SK 1382NB - 90L/4 SK 1382NB - 90LH/4	75	324
	89	1422	1.5	II	18.75	923	1559	1800	2363			
	68	1840	1.3	I	24.26	963	1609	1800	2363			
	64	1973	1.2	I	26.01	970	1609	1800	2363			
	56	2260	1.1	I	29.79	981	1609	1800	2363			
	46	2712	1.0	I	35.75	992	1609	1800	2363			
	43	2941	1.0	I	38.77	995	1609	1800	2363			
	37	3368	0.9	*	44.40	992	1609	1800	2363			
	31	4042	0.8	*	53.28	947	1609	1800	2363			
	141	896	2.9	III	11.81	1375	2700	2691	3375	SK 2282 - 90L/4 SK 2282 - 90LH/4	86	332
	125	1004	2.8	III	13.23	1413	2700	2777	3375			
	100	1254	2.9	III	16.53	1510	2700	2959	3375			
	90	1404	2.8	III	18.51	1555	2700	3049	3375			
	76	1661	2.6	III	21.90	1625	2700	3128	3375			
	69	1818	2.1	III	23.96	1667	2700	3121	3375			
	66	1894	2.3	III	24.97	1681	2700	3116	3375			
	62	2035	1.9	II	26.83	1715	2700	3110	3375			
	56	2249	2.0	III	29.65	1751	2700	3098	3375			
	53	2369	1.7	II	31.23	1755	2700	3089	3375			
	45	2772	1.6	II	36.54	1827	2700	3062	3375			
	45	2821	1.4	II	37.18	1843	2700	3058	3375			
	38	3316	1.5	II	43.71	1904	2700	3017	3375			
	37	3422	1.2	I	45.11	1899	2700	3006	3375			
	32	3923	1.2	I	51.71	1960	2700	2954	3375			
	31	4094	1.1	I	53.96	1942	2700	2936	3375			
	26	4842	1.0	I	63.83	1791	2700	2837	3375			
	70	1799	2.9	III	23.71	1865	3263	3755	4500	SK 3282 - 90L/4 SK 3282 - 90LH/4	119	336
	64	1963	3.0	III	25.88	1917	3263	3850	4500			
	58	2177	2.9	III	28.7	1969	3263	3960	4500			
	52	2422	2.9	III	31.93	2025	3263	4070	4500			
	44	2865	2.6	III	37.77	2104	3263	4255	4500			
	43	2930	1.9	II	38.62	2093	3263	4262	4500			
	40	3188	2.6	III	42.02	2162	3263	4379	4500			
	37	3402	1.9	II	44.85	2174	3263	4428	4500			
	35	3644	1.3	I	48.04	2194	3263	4500	4500			
	31	4018	1.9	II	52.97	2259	3263	4626	4500			
	30	4232	1.3	I	55.79	2275	3263	4671	4500			
	26	4864	1.8	II	64.12	2356	3263	4849	4500			
	25	4999	1.3	I	65.89	2356	3263	4874	4500			
	21	6051	1.2	I	79.76	2444	3263	4966	4500			
	19	6732	1.2	I	88.74	2493	3263	4921	4500			
	37	3418	3.1	III	45.05	3344	4950	6489	6750	SK 4282 - 90L/4 SK 4282 - 90LH/4	152	340
	22	5819	2.4	III	76.70	3818	4950	6845	6750			
	18	6867	2.1	III	90.52	3989	4950	6813	6750			
	15	8404	1.7	II	110.78	4183	4950	6757	6750			
	11	11789	1.0	I	155.40	4473	4950	6590	6750			

(AGMA Class I = f_B 1.0 - 1.39 II = f_B 1.4 - 1.99 III = f_B ≥ 2.0 * = f_B < 1.0) **(Model Type in blue is an Energy Efficient motor)**

Send Quote Requests to info@automatedpt.com
Call +1(800)985-6929 To Order or Order Online At Nordgearmotors.com

2.0 hp Gearmotors



DRIVESYSTEMS

GEARMOTORS

Motor Power P_n [hp]	Output Speed n_2 [rpm]	Output Torque T_2 [lb-in]	Service Factor f_B	AGMA Class	Gear Ratio i_{tot}	Standard Bearings F_{RN} OHL [lb]	Standard Bearings F_{AN} Thrust [lb]	Heavy Duty Bearings (VL) F_{RVL} OHL [lb]	Heavy Duty Bearings (VL) F_{AVL} Thrust [lb]	Model Type	Weight [lb]	Dim. Page
2.0	10	12153	1.2	I	160.20	4435	4950	6568	6750	**SK 4382 - 90L/4**	185	342
	8.7	14533	1.2	I	191.57	4241	4950	6410	6750	SK 4382 - 90LH/4		
	7.9	16014	0.9	*	211.09	4064	4950	6293	6750			
	6.6	19202	0.9	*	253.12	3589	4950	5999	6750			
	5.5	22960	0.8	*	302.65	2781	4950	5553	6750			
	17	7601	2.6	III	100.19	5931	7200	9990	9000	**SK 5282 - 90L/4**	232	344
	12	10168	2.3	III	134.03	6415	7200	9934	9000	SK 5282 - 90LH/4		
	11	11677	2.4	III	153.92	6613	7200	9893	9000	**SK 5382 - 90L/4**	273	346
	9.7	12993	1.9	II	171.27	6739	7200	9855	9000	SK 5382 - 90LH/4		
	8.2	15367	1.8	II	202.57	6773	7200	9772	9000			
	6.7	18867	1.5	II	248.70	6554	7200	9621	9000			
	6.1	20482	1.2	I	269.99	6437	7200	9540	9000			
	5	25147	1.1	I	331.48	6021	7200	9266	9000			
	4.6	27439	0.9	*	361.69	5774	7200	9106	9000			
	3.9	32453	0.9	*	427.79	5103	7200	8696	9000			
	7.4	17129	2.1	III	225.79	9185	10463	13034	13500	**SK 6382 - 90L/4**	410	350
	6.6	19099	2.1	III	251.76	9106	10463	12980	13500	SK 6382 - 90LH/4		
	5.2	24070	2.1	III	317.28	8865	10463	12814	13500			
	4.2	29828	1.7	II	393.19	8507	10463	12569	13500			
	3.7	33765	1.1	I	445.09	8208	10463	12366	13500			
	3	41844	1.1	I	551.58	7425	10463	11862	13500			
	2.9	43174	1.1	I	569.11	7272	10463	11765	13500	**SK 6382/22 - 90L/4**	452	374
	2.6	48364	1.0	I	637.53	6586	10463	11354	13500	SK 6382/22 - 90LH/4		
	2	62109	0.8	*	818.71	3598	10463	9925	13500			
	4.4	28544	2.2	III	376.26	12879	13050	18272	18000	**SK 7382/22 - 90L/4**	613	374
	3.8	33038	1.9	II	435.50	12733	13050	18169	18000	SK 7382/22 - 90LH/4		
	2.9	43239	1.4	II	569.97	12310	13050	17874	18000			
	2.3	54189	1.2	I	714.31	11707	13050	17465	18000			
	1.8	70848	0.9	*	933.91	10427	13050	16634	18000			
	1.6	79365	0.8	*	1046.18	9558	13050	16103	18000			
	3.5	35543	3.0	III	468.52	18185	16425	22500	22500	**SK 8382/42 - 90L/4**	946	375
	3	41802	2.6	III	551.02	18923	16425	22500	22500	SK 8382/42 - 90LH/4		
	2.7	46499	2.3	III	612.94	19420	16425	22500	22500	**SK 8382/32 - 90L/4**	913	374
	2.3	54502	2.0	III	718.43	20129	16425	22500	22500	SK 8382/32 - 90LH/4		
	1.9	67609	1.6	II	891.21	20057	16425	22500	22500			
	1.6	80786	1.3	I	1064.91	19598	16425	22500	22500			
	1.2	103691	1.0	I	1366.83	18567	16425	22500	22500			
	0.98	128802	0.8	*	1697.85	17042	16425	22500	22500			
	1.9	67251	3.2	III	886.49	23886	22950	27000	29250	**SK 9382/42 - 90L/4**	1612	375
	1.4	89427	2.4	III	1178.81	25706	22950	27000	29250	SK 9382/42 - 90LH/4		
	1.2	107663	2.0	III	1419.20	26818	22950	27000	29250			
	0.95	132563	1.6	II	1747.42	27000	22950	27000	29250			

(AGMA Class I = f_B 1.0 - 1.39 II = f_B 1.4 - 1.99 III = f_B ≥ 2.0 * = f_B < 1.0) **(Model Type in blue is an Energy Efficient motor)**

Send Quote Requests to info@automatedpt.com
Call +1(800)985-6929 To Order or Order Online At Nordgearmotors.com

DRIVESYSTEMS



3.0 hp Gearmotors

Motor Power P_n [hp]	Output Speed n_2 [rpm]	Output Torque T_2 [lb-in]	Service Factor f_B	AGMA Class	Gear Ratio i_{tot}	Standard Bearings F_{RN} OHL [lb]	Standard Bearings F_{AN} Thrust [lb]	Heavy Duty Bearings (VL) F_{RVL} OHL [lb]	Heavy Duty Bearings (VL) F_{AVL} Thrust [lb]	Model Type	Weight [lb]	Dim. Page
3.0	356	531	2.1	III	4.79	502	920	1541	1609	**SK 1282 - 100L/4**	71	330
	312	607	2.5	III	5.47	515	959	1595	1609	SK 1282 - 100LH/4		
	265	714	2.2	III	6.43	531	1008	1667	1609			
	235	804	2.1	III	7.24	545	1049	1719	1609			
	208	912	1.6	II	8.21	567	1107	1784	1609			
	207	915	1.8	II	8.24	554	1087	1775	1609			
	186	1019	1.6	II	9.18	574	1139	1832	1609			
	165	1148	1.5	II	10.34	583	1175	1886	1609			
	145	1306	1.4	II	11.76	590	1215	1944	1609			
	121	1567	1.2	I	14.11	608	1287	2039	1609			
	99	1911	1.0	I	17.21	614	1339	2081	1609			
	83	2284	0.9	*	20.57	612	1386	2039	1609			
	105	1808	1.1	I	16.28	799	1321	1800	2363	**SK 1382NB - 100L/4**	84	324
	91	2082	1.0	I	18.75	808	1357	1800	2363	SK 1382NB - 100LH/4		
	70	2694	0.9	*	24.26	810	1409	1800	2363			
	66	2888	0.8	*	26.01	810	1422	1800	2363			
	57	3308	0.8	*	29.79	797	1440	1800	2363			
	378	501	3.3	III	4.51	997	1816	2012	3375	**SK 2282 - 100L/4**	95	332
	298	635	3.0	III	5.72	1067	1989	2151	3375	SK 2282 - 100LH/4		
	265	714	2.8	III	6.43	1103	2081	2219	3375			
	228	831	2.6	III	7.48	1148	2205	2313	3375			
	204	929	2.4	III	8.37	1184	2300	2385	3375			
	189	1003	3.0	III	9.03	1217	2390	2446	3375			
	168	1127	2.8	III	10.15	1258	2491	2522	3375			
	144	1311	2.6	III	11.81	1305	2626	2626	3375			
	129	1469	2.4	III	13.23	1346	2700	2707	3375			
	103	1835	2.3	III	16.53	1429	2700	2880	3375			
	92	2055	2.1	III	18.51	1463	2700	2959	3375			
	78	2432	1.7	II	21.90	1519	2700	3087	3375			
	71	2660	1.4	II	23.96	1553	2700	3069	3375			
	68	2773	1.6	II	24.97	1559	2700	3062	3375			
	64	2979	1.3	I	26.83	1586	2700	3047	3375			
	58	3292	1.3	I	29.65	1607	2700	3020	3375			
	55	3468	1.1	I	31.23	1600	2700	3002	3375			
	47	4057	1.1	I	36.54	1640	2700	2939	3375			
	39	4853	1.0	I	43.71	1683	2700	2837	3375			
	33	5742	0.8	*	51.71	1553	2700	2693	3375			
	84	2241	3.1	III	20.18	1699	3263	3503	4500	**SK 3282 - 100L/4**	128	336
	80	2374	2.7	III	21.38	1717	3263	3553	4500	SK 3282 - 100LH/4		
	76	2493	2.8	III	22.45	1746	3263	3602	4500			
	72	2633	2.5	III	23.71	1757	3263	3647	4500			
	66	2874	2.6	III	25.88	1800	3263	3737	4500			
	59	3187	2.4	III	28.70	1841	3263	3839	4500			
	53	3545	2.2	III	31.93	1886	3263	3935	4500			
	45	4194	1.8	II	37.77	1944	3263	4097	4500			
	44	4288	1.3	I	38.62	1917	3263	4086	4500			
	41	4666	1.8	II	42.02	1987	3263	4205	4500			
	38	4980	1.3	I	44.85	1976	3263	4241	4500			
	32	5882	1.3	I	52.97	2027	3263	4406	4500			
	27	7120	1.3	I	64.12	2081	3263	4604	4500			

(AGMA Class I = f_B 1.0 - 1.39 II = f_B 1.4 - 1.99 III = f_B ≥ 2.0 * = f_B < 1.0) **(Model Type in blue is an Energy Efficient motor)**

Send Quote Requests to info@automatedpt.com
Call +1(800)985-6929 To Order or Order Online At Nordgearmotors.com

3.0 hp Gearmotors



DRIVESYSTEMS

GEARMOTORS

Motor Power P_n [hp]	Output Speed n_2 [rpm]	Output Torque T_2 [lb-in]	Service Factor f_B	AGMA Class	Gear Ratio i_{tot}	Standard Bearings F_{RN} OHL [lb]	Standard Bearings F_{AN} Thrust [lb]	Heavy Duty Bearings (VL) F_{RVL} OHL [lb]	Heavy Duty Bearings (VL) F_{AVL} Thrust [lb]	Model Type	Weight [lb]	Dim. Page
3.0	53	3591	3.4	III	32.34	2921	4950	5778	6750	**SK 4282 - 100L/4**	161	340
	47	4042	3.0	III	36.40	2975	4950	5931	6750	SK 4282 - 100LH/4		
	46	4087	2.9	III	36.81	3013	4950	5978	6750			
	42	4524	3.0	III	40.74	3098	4950	6156	6750			
	39	4847	2.9	III	43.65	3125	4950	6228	6750			
	38	5002	2.8	III	45.05	3175	4950	6305	6750			
	33	5796	2.8	III	52.20	3263	4950	6523	6750			
	28	6840	2.3	III	61.60	3398	4950	6813	6750			
	23	8371	1.7	II	75.39	3553	4950	6757	6750			
	22	8517	1.7	II	76.70	3535	4950	6752	6750			
	19	10051	1.4	II	90.52	3656	4950	6683	6750			
	15	12301	1.2	I	110.78	3796	4950	6559	6750			
	31	6207	3.7	III	55.90	4822	7200	9421	9000	**SK 5282 - 100L/4**	240	344
	25	7621	3.4	III	68.63	5108	7200	9956	9000	SK 5282 - 100LH/4		
	21	9062	1.8	II	81.61	5312	7200	9961	9000			
	19	10194	2.4	III	91.81	5508	7200	9934	9000			
	17	11125	1.8	II	100.19	5605	7200	9909	9000			
	13	14882	1.6	II	134.03	6019	7200	9790	9000			
	11	17091	1.7	II	153.92	6100	7200	9702	9000	**SK 5382 - 100L/4**	282	346
	10	19017	1.3	I	171.27	6188	7200	9614	9000	SK 5382 - 100LH/4		
	8.4	22493	1.3	I	202.57	6271	7200	9430	9000			
	6.9	27615	1.0	I	248.70	5753	7200	9095	9000			
	6.3	29979	0.8	*	269.99	5459	7200	8910	9000			
	5.1	36807	0.8	*	331.48	4327	7200	8267	9000			
	23	8348	3.8	III	75.18	7938	10463	13205	13500	**SK 6382 - 100L/4**	419	350
	18	10285	3.4	III	92.63	8404	10463	13178	13500	SK 6382 - 100LH/4		
	15	12746	3.4	III	114.79	8901	10463	13136	13500			
	13	14087	2.9	III	126.87	9110	10463	13109	13500			
	11	17753	2.9	III	159.88	9160	10463	13019	13500			
	10	19025	2.6	III	171.34	9108	10463	12983	13500			
	8	23577	1.8	II	212.33	8892	10463	12832	13500			
	7.6	25071	1.4	II	225.79	8811	10463	12776	13500			
	6.8	27955	1.4	II	251.76	8636	10463	12654	13500			
	6.4	29713	1.8	II	267.59	8516	10463	12573	13500			
	5.4	35230	1.4	II	317.28	8084	10463	12285	13500			
	4.3	43659	1.2	I	393.19	7214	10463	11729	13500			
	8.3	22762	2.9	III	204.99	11338	13050	18380	18000	**SK 7382 - 100L/4**	580	354
	7.9	24032	3.1	III	216.43	11437	13050	18360	18000	SK 7382 - 100LH/4		
	6.2	30377	2.2	III	273.57	12121	13050	18232	18000			
	5	37618	1.8	II	338.79	12557	13050	18047	18000			
	4.5	41779	1.5	II	376.26	12377	13050	17921	18000	**SK 7382/22 - 100L/4**	622	374
	3.9	48357	1.3	I	435.50	12049	13050	17696	18000	SK 7382/22 - 100LH/4		
	3	63288	1.0	I	569.97	11068	13050	17044	18000			
	2.4	79315	0.8	*	714.31	9563	13050	16108	18000			
	5.4	35344	3.3	III	318.31	15570	16425	22500	23625	**SK 8382 - 100L/4**	856	358
	4.4	42936	2.6	III	386.68	16389	16425	22500	23625	SK 8382 - 100LH/4		

(AGMA Class I = f_B 1.0 - 1.39 II = f_B 1.4 - 1.99 III = f_B ≥ 2.0 * = f_B < 1.0) **(Model Type in blue is an Energy Efficient motor)**

Send Quote Requests to info@automatedpt.com
Call +1(800)985-6929 To Order or Order Online At Nordgearmotors.com

DRIVESYSTEMS



3.0 hp, 5.0 hp Gearmotors

Motor Power P_n [hp]	Output Speed n_2 [rpm]	Output Torque T_2 [lb-in]	Service Factor f_B	AGMA Class	Gear Ratio i_{tot}	Standard Bearings F_{RN} OHL [lb]	Standard Bearings F_{AN} Thrust [lb]	Heavy Duty Bearings (VL) F_{RVL} OHL [lb]	Heavy Duty Bearings (VL) F_{AVL} Thrust [lb]	Model Type	Weight [lb]	Dim. Page
3.0	3.6	52023	2.1	III	468.52	16979	16425	22500	22500	**SK 8382/42 - 100L/4**	955	375
	3.1	61184	1.8	II	551.02	17582	16425	22500	22500	SK 8382/42 - 100LH/4		
	2.8	68059	1.6	II	612.94	17942	16425	22500	22500	**SK 8382/32 - 100L/4**	922	374
	2.4	79773	1.3	I	718.43	18356	16425	22500	22500	SK 8382/32 - 100LH/4		
	1.9	98958	1.1	I	891.21	18806	16425	22500	22500			
	1.6	118245	0.9	*	1064.91	17739	16425	22500	22500			
	2.8	68655	3.1	III	618.3	20666	22950	27000	29250	**SK 9382/42 - 100L/4**	1621	375
	2.4	79434	2.7	III	715.38	21413	22950	27000	29250	SK 9382/42 - 100LH/4		
	1.9	98434	2.2	III	886.49	22212	22950	27000	29250			
	1.4	130892	1.6	II	1178.81	23612	22950	27000	29250			
	1.2	157585	1.3	I	1419.2	24302	22950	27000	29250			
	0.98	194029	1.1	I	1747.42	24863	22950	27000	29250			
	1.5	129413	2.4	III	1165.49			29801	33750	**SK 10382/52 - 100L/4**	2928	375
	1.2	157534	2.0	III	1418.74			29230	33750	SK 10382/52 - 100LH/4		
5.0	360	875	1.3	I	4.79	441	821	1487	1609	**SK 1282 - 100LA/4**	77	330
	315	1000	1.5	II	5.47	446	848	1537	1609	SK 1282 - 112MH/4		
	268	1175	1.4	II	6.43	450	878	1595	1609			
	238	1323	1.3	I	7.24	450	900	1638	1609			
	210	1500	0.9	*	8.21	475	952	1701	1609			
	209	1506	1.1	I	8.24	450	920	1683	1609			
	188	1678	1.0	I	9.18	464	959	1737	1609			
	167	1890	0.9	*	10.34	459	972	1780	1609			
	147	2149	0.8	*	11.76	446	988	1825	1609			
	382	824	2.0	III	4.51	950	1728	1969	3375	**SK 2282 - 100LA/4**	101	332
	302	1045	1.8	II	5.72	1006	1881	2099	3375	SK 2282 - 112MH/4		
	268	1175	1.7	II	6.43	1035	1958	2162	3375			
	231	1367	1.6	II	7.48	1069	2061	2246	3375			
	206	1530	1.5	II	8.37	1096	2140	2311	3375			
	191	1650	1.8	II	9.03	1132	2225	2372	3375			
	170	1855	1.7	II	10.15	1159	2306	2437	3375			
	146	2158	1.6	II	11.81	1193	2417	2536	3375			
	130	2418	1.5	II	13.23	1215	2500	2601	3375			
	104	3021	1.4	II	16.53	1276	2700	2750	3375			
	93	3383	1.3	I	18.51	1289	2700	2815	3375			
	79	4002	1.1	I	21.90	1316	2700	2918	3375			
	72	4379	0.9	*	23.96	1337	2700	2900	3375			
	69	4563	1.0	I	24.97	1325	2700	2876	3375			
	64	4903	0.8	*	26.83	1339	2700	2831	3375			
	58	5419	0.8	*	29.65	1330	2700	2750	3375			
	385	819	2.3	III	4.48	1071	1784	2264	3490	**SK 3282 - 100LA/4**	135	336
	301	1046	2.2	III	5.74	1139	1956	2423	3724	SK 3282 - 112MH/4		
	257	1224	2.1	III	6.70	1186	2072	2527	3872			
	208	1519	1.9	II	8.31	1251	2241	2675	4091			
	176	1791	2.1	III	9.80	1314	2385	2799	4277			
	152	2080	2.1	III	11.38	1364	2520	2912	4446			
	122	2579	1.9	II	14.11	1424	2716	3074	4500			
	103	3047	1.9	II	16.67	1478	2864	3206	4500			

(AGMA Class I = f_B 1.0 - 1.39 II = f_B 1.4 - 1.99 III = f_B ≥ 2.0 * = f_B < 1.0) **(Model Type in blue is an Energy Efficient motor)**

Send Quote Requests to info@automatedpt.com
Call +1(800)985-6929 To Order or Order Online At Nordgearmotors.com

5.0 hp Gearmotors



DRIVESYSTEMS

Motor Power P_n [hp]	Output Speed n_2 [rpm]	Output Torque T_2 [lb-in]	Service Factor f_B	AGMA Class	Gear Ratio i_{tot}	Standard Bearings F_{RN} OHL [lb]	Standard Bearings F_{AN} Thrust [lb]	Heavy Duty Bearings (VL) F_{RVL} OHL [lb]	Heavy Duty Bearings (VL) F_{AVL} Thrust [lb]	Model Type	Weight [lb]	Dim. Page
5.0	85	3688	1.9	II	20.18	1537	3044	3359	4500	**SK 3282 - 100LA/4** SK 3282 - 112MH/4	135	336
	81	3907	1.6	II	21.38	1541	3083	3398	4500			
	77	4103	1.7	II	22.45	1566	3148	3447	4500			
	73	4333	1.5	II	23.71	1566	3173	3474	4500			
	67	4730	1.6	II	25.88	1589	3263	3553	4500			
	60	5245	1.5	II	28.70	1604	3263	3632	4500			
	54	5835	1.3	I	31.93	1627	3263	3713	4500			
	46	6903	1.1	I	37.77	1634	3263	3830	4500			
	41	7679	1.1	I	42.02	1640	3263	3906	4500			
	285	1107	2.5	III	6.06	1726	2957	3542	5987	**SK 4282 - 100LA/4** SK 4282 - 112MH/4	168	340
	242	1303	2.4	III	7.13	1807	3155	3708	6264			
	207	1522	2.3	III	8.33	1888	3353	3879	6530			
	187	1687	2.5	III	9.23	1955	3506	3998	6743			
	159	1983	2.4	III	10.85	2045	3733	4172	6750			
	136	2317	2.3	III	12.68	2133	3960	4354	6750			
	113	2778	2.3	III	15.20	2246	4250	4581	6750			
	95	3322	2.3	III	18.18	2358	4538	4808	6750			
	80	3920	2.3	III	21.45	2459	4831	5031	6750			
	77	4092	2.1	III	22.39	2473	4901	5076	6750			
	66	4797	2.3	III	26.25	2588	4950	5299	6750			
	65	4830	2.1	III	26.43	2588	4950	5306	6750			
	53	5910	2.1	III	32.34	2702	4950	5589	6750			
	47	6652	1.8	II	36.40	2711	4950	5697	6750			
	47	6727	1.7	II	36.81	2768	4950	5751	6750			
	42	7445	1.8	II	40.74	2833	4950	5900	6750			
	40	7977	1.8	II	43.65	2815	4950	5958	6750			
	38	8233	1.7	II	45.05	2876	4950	6055	6750			
	33	9540	1.7	II	52.20	2905	4950	6210	6750			
	28	11258	1.4	II	61.60	2977	4950	6451	6750			
	23	13778	1.0	I	75.39	3042	4950	6464	6750			
	22	14017	1.0	I	76.70	2986	4950	6446	6750			
	19	16543	0.9	*	90.52	3038	4950	6251	6750			
	57	5574	2.2	III	30.50	3902	7200	7805	9000	**SK 5282 - 100LA/4** SK 5282 - 112MH/4	247	344
	52	6109	2.4	III	33.43	4005	7200	8015	9000			
	42	7456	2.2	III	40.80	4210	7200	8444	9000			
	36	8639	2.5	III	47.27	4307	7200	8741	9000			
	31	10152	1.9	II	55.55	4532	7200	9140	9000			
	31	10216	2.3	III	55.90	4487	7200	9108	9000			
	25	12542	2.1	III	68.63	4712	7200	9603	9000			
	21	14915	1.1	I	81.61	4831	7200	9788	9000			
	19	16779	1.5	II	91.81	4991	7200	9716	9000			
	17	18310	1.1	I	100.19	5036	7200	9648	9000			
	13	24494	1.0	I	134.03	5227	7200	9308	9000			
	21	15117	1.6	II	82.72	4885	7200	9781	9000	**SK 5382 - 100LA/4** SK 5382 - 112MH/4	289	346
	19	16760	1.5	II	91.71	4966	7200	9716	9000			
	15	21450	1.1	I	117.37	5040	7200	9488	9000			
	12	25370	1.1	I	138.82	5150	7200	9252	9000			
	11	28129	1.0	I	153.92	5195	7200	9056	9000			
	10	31300	0.8	*	171.27	5126	7200	8800	9000			
	8.5	37020	0.8	*	202.57	4282	7200	8242	9000			
	26	11959	2.5	III	65.44	7254	10463	13149	13500	**SK 6282 - 100LA/4** SK 6282 - 112MH/4	432	348
	21	14681	2.5	III	80.33	7646	10463	13095	13500			

(AGMA Class I = f_B 1.0 - 1.39 II = f_B 1.4 - 1.99 III = f_B ≥ 2.0 * = f_B < 1.0) **(Model Type in blue is an Energy Efficient motor)**

Send Quote Requests to info@automatedpt.com
Call +1(800)985-6929 To Order or Order Online At Nordgearmotors.com

DRIVESYSTEMS



5.0 hp Gearmotors

Motor Power P_n [hp]	Output Speed n_2 [rpm]	Output Torque T_2 [lb-in]	Service Factor f_B	AGMA Class	Gear Ratio i_{tot}	Standard Bearings F_{RN} OHL [lb]	Standard Bearings F_{AN} Thrust [lb]	Heavy Duty Bearings (VL) F_{RVL} OHL [lb]	Heavy Duty Bearings (VL) F_{AVL} Thrust [lb]	Model Type	Weight [lb]	Dim. Page
5.0	34	9333	2.4	III	51.07	6770	10463	13192	13500	**SK 6382 - 100LA/4**	426	350
	29	10903	2.3	III	59.66	7056	10463	13167	13500	SK 6382 - 112MH/4		
	23	13432	2.1	III	73.50	7423	10463	13122	13500			
	23	13739	2.3	III	75.18	7486	10463	13115	13500			
	19	16928	2.1	III	92.63	7855	10463	13041	13500			
	15	20978	2.1	III	114.79	8235	10463	12922	13500			
	14	23186	1.7	II	126.87	8332	10463	12845	13500			
	11	29219	1.7	II	159.88	8550	10463	12598	13500			
	10	31313	1.6	II	171.34	8402	10463	12497	13500			
	8.1	38804	1.1	I	212.33	7749	10463	12067	13500			
	7.6	41264	0.9	*	225.79	7490	10463	11903	13500			
	6.9	46010	0.9	*	251.76	6914	10463	11549	13500			
	6.4	48903	1.1	I	267.59	6505	10463	11309	13500			
	5.4	57984	0.9	*	317.28	4781	10463	10413	13500			
	14	22546	2.4	III	123.37	9326	13050	18385	18000	**SK 7382 - 100LA/4**	587	354
	11	27517	2.2	III	150.57	9720	13050	18293	18000	SK 7382 - 112MH/4		
	11	29637	1.9	II	162.17	9797	13050	18248	18000			
	8.4	37463	1.8	II	204.99	10283	13050	18052	18000			
	8	39553	1.9	II	216.43	10294	13050	17991	18000			
	6.3	49996	1.3	I	273.57	10706	13050	17633	18000			
	5.1	61915	1.1	I	338.79	10908	13050	17111	18000			
	8.6	36734	2.6	III	201.00	12913	16425	22500	23625	**SK 8382 - 100LA/4**	862	358
	5.4	58172	2.0	III	318.31	14105	16425	22500	23625	SK 8382 - 112MH/4		
	4.5	70667	1.6	II	386.68	14623	16425	22500	23625			
	3.7	85624	1.3	I	468.52	14798	16425	22500	22500	**SK 8382/42 - 100LA/4**	961	375
	3.1	100701	1.1	I	551.02	14981	16425	22500	22500	SK 8382/42 - 112MH/4		
	2.8	112017	1.0	I	612.94	15012	16425	22500	22500	**SK 8382/32 - 100LA/4**	928	374
	2.4	131296	0.8	*	718.43	14954	16425	22500	22500	SK 8382/32 - 112MH/4		
	5.9	53828	2.9	III	294.54	15971	22950	27000	29250	**SK 9382/52 - 100LA/4**	1691	375
	4.2	75227	2.8	III	411.63	17334	22950	27000	29250	SK 9382/52 - 112MH/4		
	3.8	82161	2.5	III	449.57	17645	22950	27000	29250	**SK 9382/42 - 100LA/4**	1627	375
	2.8	112997	1.9	II	618.30	18603	22950	27000	29250	SK 9382/42 - 112MH/4		
	2.4	130738	1.6	II	715.38	18990	22950	27000	29250			
	1.9	162009	1.3	I	886.49	19175	22950	27000	29250			
	1.5	215432	1.0	I	1178.81	19589	22950	27000	29250			
	1.2	259364	0.8	*	1419.2	19503	22950	27000	29250			
	2.5	126531	2.4	III	692.36			29853	33750	**SK 10382/52 - 100LA/4**	2935	375
	1.9	167432	1.9	II	916.16			29000	33750	SK 10382/52 - 112MH/4		
	1.5	212998	1.5	II	1165.49			27727	33750			
	1.2	259280	1.2	I	1418.74			26030	33750			
	1.8	175988	2.7	III	962.98			32177	38250	**SK 11382/52 - 100LA/4**	4783	375
	1.5	210962	2.5	III	1154.35			31329	38250	SK 11382/52 - 112MH/4		
	1.2	252770	2.1	III	1383.12			30071	38250			

(AGMA Class I = f_B 1.0 - 1.39 II = f_B 1.4 - 1.99 III = f_B ≥ 2.0 * = f_B < 1.0) **(Model Type in blue is an Energy Efficient motor)**

Send Quote Requests to info@automatedpt.com
Call +1(800)985-6929 To Order or Order Online At Nordgearmotors.com

7.5 hp Gearmotors



DRIVESYSTEMS

GEARMOTORS

Motor Power P_n [hp]	Output Speed n_2 [rpm]	Output Torque T_2 [lb-in]	Service Factor f_B	AGMA Class	Gear Ratio i_{tot}	Standard Bearings F_{RN} OHL [lb]	Standard Bearings F_{AN} Thrust [lb]	Heavy Duty Bearings (VL) F_{RVL} OHL [lb]	Heavy Duty Bearings (VL) F_{AVL} Thrust [lb]	Model Type	Weight [lb]	Dim. Page
7.5	387	1221	3.3	III	4.48	1017	1703	2219	3402	**SK 3282 - 132S/4**	185	336
	302	1565	3.1	III	5.74	1080	1856	2366	3610	**SK 3282 - 132SH/4**		
	259	1824	2.9	III	6.70	1114	1953	2459	3744			
	209	2263	2.6	III	8.31	1159	2088	2597	3935			
	177	2669	2.8	III	9.80	1208	2219	2709	4104			
	152	3099	2.3	III	11.38	1244	2333	2810	4237			
	123	3842	2.0	III	14.11	1278	2464	2948	4417			
	104	4539	1.6	II	16.67	1307	2585	3060	4500			
	86	5495	1.3	I	20.18	1330	2716	3186	4500			
	81	5822	1.1	I	21.38	1319	2720	3204	4500			
	77	6113	1.2	I	22.45	1337	2779	3254	4500			
	73	6456	1.0	I	23.71	1310	2774	3260	4500			
	67	7047	1.1	I	25.88	1319	2833	3335	4500			
	60	7815	1.0	I	28.70	1305	2887	3380	4500			
	54	8695	0.9	*	31.93	1289	2921	3445	4500			
	114	4139	3.2	III	15.20	2115	4043	4464	6750	**SK 4282 - 132S/4**	218	340
	95	4951	3.2	III	18.18	2198	4298	4673	6750	**SK 4282 - 132SH/4**		
	81	5841	2.6	III	21.45	2282	4532	4871	6750			
	77	6097	2.5	III	22.39	2284	4568	4905	6750			
	66	7148	2.0	III	26.25	2369	4856	5121	6750			
	66	7197	2.2	III	26.43	2365	4824	5121	6750			
	65	7276	1.9	II	26.72	2313	4770	5078	6750			
	54	8725	1.8	II	32.04	2385	4950	5301	6750			
	54	8806	1.6	II	32.34	2444	4950	5351	6750			
	48	9912	1.2	I	36.40	2381	4950	5405	6750			
	47	10024	1.2	I	36.81	2450	4950	5488	6750			
	45	10432	1.7	II	38.31	2435	4950	5506	6750			
	43	11094	1.2	I	40.74	2482	4950	5609	6750			
	40	11886	1.2	I	43.65	2428	4950	5627	6750			
	39	12267	1.1	I	45.05	2504	4950	5715	6750			
	33	14214	1.1	I	52.20	2428	4950	5814	6750			
	28	16774	0.9	*	61.60	2435	4950	5994	6750			
	57	8305	3.1	III	30.50	3692	7200	7621	9000	**SK 5282 - 132S/4**	298	344
	52	9103	2.2	III	33.43	3773	7200	7805	9000	**SK 5282 - 132SH/4**		
	49	9656	2.5	III	35.46	3758	7200	7884	9000			
	43	11110	2.0	III	40.80	3926	7200	8188	9000			
	41	11421	2.5	III	41.94	3902	7200	8208	9000			
	37	12872	1.7	II	47.27	3956	7200	8411	9000			
	34	14021	2.0	III	51.49	4077	7200	8638	9000			
	31	15127	1.3	I	55.55	4136	7200	8798	9000			
	31	15222	1.5	II	55.90	4086	7200	8753	9000			
	25	18688	1.4	II	68.63	4232	7200	9191	9000			
	19	25001	1.0	I	91.81	4325	7200	9275	9000			
	44	10751	2.6	III	39.48	6032	10463	12058	13500	**SK 6282 - 132S/4**	483	348
	35	13547	2.6	III	49.75	6392	10463	12807	13500	**SK 6282 - 132SH/4**		
	28	16633	2.4	III	61.08	6721	10463	13048	13500			
	27	17820	1.7	II	65.44	6764	10463	13016	13500			
	22	21874	1.7	II	80.33	7083	10463	12893	13500			

(AGMA Class I = f_B 1.0 - 1.39 II = f_B 1.4 - 1.99 III = f_B ≥ 2.0 * = f_B < 1.0) **(Model Type in blue is an Energy Efficient motor)**

Send Quote Requests to info@automatedpt.com
Call +1(800)985-6929 To Order or Order Online At Nordgearmotors.com

DRIVESYSTEMS



7.5 hp Gearmotors

Motor Power P_n [hp]	Output Speed n_2 [rpm]	Output Torque T_2 [lb-in]	Service Factor f_B	AGMA Class	Gear Ratio i_{tot}	Standard Bearings F_{RN} OHL [lb]	Standard Bearings F_{AN} Thrust [lb]	Heavy Duty Bearings (VL) F_{RVL} OHL [lb]	Heavy Duty Bearings (VL) F_{AVL} Thrust [lb]	Model Type	Weight [lb]	Dim. Page
7.5	29	16246	3.0	III	59.66	6613	10463	13057	13500	**SK 6382 - 132S/4**	476	350
	24	20015	2.5	III	73.50	6892	10463	12951	13500	SK 6382 - 132SH/4		
	23	20472	2.6	III	75.18	6955	10463	12938	13500			
	19	25224	2.1	III	92.63	7191	10463	12769	13500			
	15	31258	1.7	II	114.79	7380	10463	12499	13500			
	14	34548	1.2	I	126.87	7385	10463	12323	13500			
	11	43536	1.2	I	159.88	7227	10463	11738	13500			
	10	46657	1.1	I	171.34	6827	10463	11498	13500			
	30	15497	3.2	III	56.91	7317	13050	15899	18000	**SK 7282 - 132S/4**	622	352
	25	18988	2.7	III	69.73	7691	13050	16830	18000	SK 7282 - 132SH/4		
	14	33595	2.0	III	123.37	8514	13050	18153	18000	**SK 7382 - 132S/4**	637	354
	12	41001	1.6	II	150.57	8750	13050	17946	18000	SK 7382 - 132SH/4		
	11	44160	1.3	I	162.17	8730	13050	17845	18000			
	8.5	55820	1.2	I	204.99	8962	13050	17395	18000			
	8	58935	1.2	I	216.43	8870	13050	17255	18000			
	6.3	74495	0.9	*	273.57	8921	13050	16416	18000			
	29	16186	3.5	III	59.44	9092	15779			**SK 8282 - 132S/4**	904	356
	24	19663	3.5	III	72.21	9590	16425			SK 8282 - 132SH/4		
	15	32260	3.4	III	118.47	10706	16425	22275	23625	**SK 8382 - 132S/4**	913	358
	14	34142	3.2	III	125.38	10899	16425	22500	23625	SK 8382 - 132SH/4		
	12	39188	2.8	III	143.91	11192	16425	22500	23625			
	11	41617	2.8	III	152.83	11259	16425	22500	23625			
	9.3	50557	2.2	III	185.66	11745	16425	22500	23625			
	8.6	54734	1.7	II	201.00	11761	16425	22500	23625			
	7.2	65904	1.8	II	242.02	12020	16425	22500	23625			
	5.9	80061	1.4	II	294.01	12328	16425	22500	23625			
	5.5	86678	1.3	I	318.31	12260	16425	22500	23625			
	4.5	105296	1.1	I	386.68	12438	16425	22500	23625			
	9.9	47667	4.0	III	175.05	15998	22950	27000	29250	**SK 9382 - 132S/4**	1579	362
	8.5	55736	3.5	III	204.68	16614	22950	27000	29250	SK 9382 - 132SH/4		
	6	79309	2.7	III	291.25	17838	22950	27000	29250			
	4.9	95950	2.3	III	352.36	18619	22950	27000	29250			
	3.9	122421	1.7	II	449.57	15741	22950	27000	29250	**SK 9382/42 - 132S/4**	1678	375
	2.8	168367	1.3	I	618.30	16016	22950	27000	29250	SK 9382/42 - 132SH/4		
	2.4	194803	1.1	I	715.38	15982	22950	27000	29250			
	2	241398	0.9	*	886.49	15257	22950	27000	29250			
	3.6	129550	2.4	III	475.75			29799	33750	**SK 10382/52 - 132S/4**	2986	375
	3	157350	2.0	III	577.84			29234	33750	SK 10382/52 - 132SH/4		
	2.5	188535	1.6	II	692.36			28456	33750			
	1.9	249477	1.2	I	916.16			26426	33750			
	1.5	317371	1.0	I	1165.49			23191	33750			
	1.2	386333	0.8	*	1418.74			18315	33750			
	2.9	164111	3.2	III	602.67			32427	38250	**SK 11382/52 - 132S/4**	4833	375
	2.4	199353	2.7	III	732.09			31631	38250	SK 11382/52 - 132SH/4		
	1.8	262226	2.0	III	962.98			29747	38250			
	1.5	314338	1.7	II	1154.35			27662	38250			
	1.3	376633	1.4	II	1383.12			24365	38250			
	0.95	498382	1.1	I	1830.22			13012	38250			
	0.75	632651	0.8	*	2323.3				38250			

(AGMA Class I = f_B 1.0 - 1.39 II = f_B 1.4 - 1.99 III = f_B ≥ 2.0 * = f_B < 1.0) **(Model Type in blue is an Energy Efficient motor)**

Send Quote Requests to info@automatedpt.com
Call +1(800)985-6929 To Order or Order Online At Nordgearmotors.com

10 hp Gearmotors



NORD DRIVESYSTEMS

Motor Power P_n [hp]	Output Speed n_2 [rpm]	Output Torque T_2 [lb-in]	Service Factor f_B	AGMA Class	Gear Ratio i_{tot}	Standard Bearings F_{RN} OHL [lb]	Standard Bearings F_{AN} Thrust [lb]	Heavy Duty Bearings (VL) F_{RVL} OHL [lb]	Heavy Duty Bearings (VL) F_{AVL} Thrust [lb]	Model Type	Weight [lb]	Dim. Page
10	387	1627	2.5	III	4.48	970	1629	2178	3314	**SK 3282 - 132M/4**	209	336
	302	2087	2.3	III	5.74	1012	1760	2314	3501	SK 3282 - 132MH/4		
	259	2435	2.2	III	6.70	1040	1836	2394	3614			
	209	3020	2.0	III	8.31	1064	1942	2513	3769			
	177	3561	2.1	III	9.80	1103	2054	2624	3922			
	152	4136	1.8	II	11.38	1125	2140	2709	4037			
	123	5128	1.5	II	14.11	1127	2241	2822	4169			
	104	6058	1.2	I	16.67	1125	2311	2912	4277			
	86	7333	1.0	I	20.18	1118	2383	3011	4388			
	81	7770	0.8	*	21.38	1078	2367	3013	4381			
	77	8158	0.9	*	22.45	1094	2412	3056	4446			
	73	8616	0.8	*	23.71	1044	2383	3056	4403			
	67	9405	0.8	*	25.88	1035	2408	3098	4453			
	160	3943	2.6	III	10.85	1854	3434	4005	6689	**SK 4282 - 132M/4**	243	340
	137	4608	2.4	III	12.68	1910	3591	4160	6750	SK 4282 - 132MH/4		
	114	5524	2.4	III	15.20	1987	3816	4352	6750			
	95	6607	2.4	III	18.18	2043	4043	4545	6750			
	81	7795	1.9	II	21.45	2099	4250	4718	6750			
	77	8137	1.8	II	22.39	2093	4257	4748	6750			
	66	9539	1.5	II	26.25	2149	4480	4930	6750			
	66	9605	1.6	II	26.43	2140	4473	4919	6750			
	65	9710	1.5	II	26.72	2063	4381	4869	6750			
	54	11643	1.4	II	32.04	2093	4613	5072	6750			
	54	11752	1.2	I	32.34	2160	4709	5126	6750			
	47	13377	0.9	*	36.81	2124	4770	5218	6750			
	45	13922	1.3	I	38.31	2079	4754	5213	6750			
	43	14805	0.9	*	40.74	2133	4901	5321	6750			
	39	16371	0.9	*	45.05	2099	4950	5387	6750			
	274	2300	3.2	III	6.33	2354	3933	4910	8255	**SK 5282 - 132M/4**	322	344
	92	6861	2.9	III	18.88	3157	6026	6615	9000	SK 5282 - 132MH/4		
	85	7399	2.6	III	20.36	3191	6181	6725	9000			
	69	9085	2.6	III	25.00	3357	6656	7090	9000			
	57	11084	2.3	III	30.50	3476	7130	7439	9000			
	52	12148	1.7	II	33.43	3546	7061	7607	9000			
	49	12886	1.9	II	35.46	3494	7200	7652	9000			
	43	14827	1.5	II	40.80	3641	7200	7949	9000			
	41	15241	1.9	II	41.94	3593	7200	7949	9000			
	34	18712	1.5	II	51.49	3710	7200	8321	9000			
	31	20187	0.9	*	55.55	3733	7200	8474	9000			
	44	14347	2.0	III	39.48	5744	10463	11844	13500	**SK 6282 - 132M/4**	507	348
	35	18079	2.0	III	49.75	6039	10463	12517	13500	SK 6282 - 132MH/4		
	28	22197	1.8	II	61.08	6300	10463	12881	13500			
	71	8874	2.7	III	24.42	5159	8728	10460	13500	**SK 6382 - 132M/4**	501	350
	60	10437	2.6	III	28.72	5371	9277	10922	13500	SK 6382 - 132MH/4		
	56	11233	2.7	III	30.91	5454	9547	11122	13500			
	48	13206	2.6	III	36.34	5666	10148	11581	13500			
	41	15430	2.4	III	42.46	5825	10463	12031	13500			
	34	18559	2.4	III	51.07	6026	10463	12564	13500			
	29	21680	2.2	III	59.66	6176	10463	12899	13500			
	24	26710	1.8	II	73.50	6332	10463	12708	13500			
	23	27320	1.9	II	75.18	6397	10463	12681	13500			
	19	33662	1.6	II	92.63	6512	10463	12373	13500			
	15	41715	1.2	I	114.79	6534	10463	11871	13500			
	14	46105	0.9	*	126.87	6431	10463	11540	13500			
	11	58101	0.9	*	159.88	4754	10463	10400	13500			

(AGMA Class I = f_B 1.0 - 1.39 II = f_B 1.4 - 1.99 III = f_B ≥ 2.0 * = f_B < 1.0) **(Model Type in blue is an Energy Efficient motor)**

Send Quote Requests to info@automatedpt.com
Call +1(800)985-6929 To Order or Order Online At Nordgearmotors.com

DRIVESYSTEMS

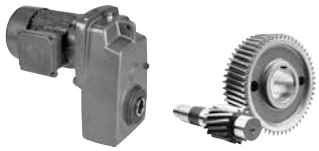

10 hp Gearmotors

Motor Power P_n [hp]	Output Speed n_2 [rpm]	Output Torque T_2 [lb-in]	Service Factor f_B	AGMA Class	Gear Ratio i_{tot}	Standard Bearings F_{RN} OHL [lb]	Standard Bearings F_{AN} Thrust [lb]	Heavy Duty Bearings (VL) F_{RVL} OHL [lb]	Heavy Duty Bearings (VL) F_{AVL} Thrust [lb]	Model Type	Weight [lb]	Dim. Page
10	30	20681	2.4	III	56.91	6944	13050	15611	18000	**SK 7282 - 132M/4**	646	352
	25	25340	2.0	III	69.73	7270	13050	16441	18000	SK 7282 - 132MH/4		
	33	19398	2.7	III	53.38	6858	12697	15354	18000	**SK 7382 - 132M/4**	662	354
	29	21630	2.9	III	59.52	6966	13050	15748	18000	SK 7382 - 132MH/4		
	25	24748	2.6	III	68.10	7139	13050	16268	18000			
	22	28640	2.3	III	78.81	7310	13050	16805	18000			
	19	33862	2.0	III	93.18	7531	13050	17516	18000			
	16	38735	1.7	II	106.59	7637	13050	18014	18000			
	14	44833	1.5	II	123.37	7745	13050	17822	18000			
	12	54717	1.2	I	150.57	7781	13050	17442	18000			
	11	58933	0.9	*	162.17	7666	13050	17255	18000			
	8.5	74494	0.9	*	204.99	7612	13050	16416	18000			
	19	33048	3.1	III	90.94	9594	16425	20390	23625	**SK 8382 - 132M/4**	937	358
	17	37507	2.9	III	103.21	9810	16425	21053	23625	SK 8382 - 132MH/4		
	15	43052	2.6	III	118.47	10067	16425	21688	23625			
	14	45563	2.4	III	125.38	10204	16425	22082	23625			
	12	52297	2.1	III	143.91	10393	16425	22500	23625			
	11	55539	2.1	III	152.83	10368	16425	22500	23625			
	9.3	67469	1.7	II	185.66	10701	16425	22500	23625			
	7.2	87950	1.3	I	242.02	10618	16425	22500	23625			
	5.9	106844	1.1	I	294.01	10634	16425	22500	23625			
	9.9	63613	3.0	III	175.05	15293	22950	27000	29250	**SK 9382 - 132M/4**	1603	362
	8.5	74381	2.6	III	204.68	15827	22950	27000	29250	SK 9382 - 132MH/4		
	6	105841	2.0	III	291.25	16571	22950	27000	29250			
	4.9	128048	1.8	II	352.36	17147	22950	27000	29250			
	3.9	163374	1.3	I	449.57	13829	22950	27000	29250	**SK 9382/42 - 132M/4**	1702	375
	2.8	224691	0.9	*	618.30	13383	22950	27000	29250	SK 9382/42 - 132MH/4		
	2.4	259970	0.8	*	715.38	12857	22950	27000	29250			
	6.1	102788	2.8	III	282.85			30231	33750	**SK 10382 - 132M/4**	2847	366
	5.2	120882	2.7	III	332.64			29950	33750	SK 10382 - 132MH/4		
	4.9	129879	2.4	III	357.40			29792	33750			
	4.7	133172	2.3	III	366.46			29732	33750	**SK 10382/52 - 132M/4**	3010	375
	3.6	172888	1.8	II	475.75			28868	33750	SK 10382/52 - 132MH/4		
	3	209988	1.5	II	577.84			27821	33750			
	2.5	251604	1.2	I	692.36			26343	33750			
	1.9	332933	0.9	*	916.16			22262	33750			
	2.9	219011	2.4	III	602.67			31109	38250	**SK 11382/52 - 132M/4**	4858	375
	2.4	266042	2.0	III	732.09			29610	38250	SK 11382/52 - 132MH/4		
	1.8	349948	1.5	II	962.98			25902	38250			
	1.5	419492	1.3	I	1154.35			21395	38250			
	1.3	502627	1.1	I	1383.12			12344	38250			
	0.95	665104	0.8	*	1830.22				38250			

(AGMA Class I = f_B 1.0 - 1.39 II = f_B 1.4 - 1.99 III = f_B ≥ 2.0 * = f_B < 1.0) **(Model Type in blue is an Energy Efficient motor)**

Send Quote Requests to info@automatedpt.com
Call +1(800)985-6929 To Order or Order Online At Nordgearmotors.com

15 hp Gearmotors



DRIVESYSTEMS

Motor Power P_n [hp]	Output Speed n_2 [rpm]	Output Torque T_2 [lb-in]	Service Factor f_B	AGMA Class	Gear Ratio i_{tot}	Standard Bearings F_{RN} OHL [lb]	Standard Bearings F_{AN} Thrust [lb]	Heavy Duty Bearings (VL) F_{RVL} OHL [lb]	Heavy Duty Bearings (VL) F_{AVL} Thrust [lb]	Model Type	Weight [lb]	Dim. Page
15	377	2510	3.3	III	4.70	1415	2383	3130	5225	**SK 4282 - 160M/4**	282	340
	354	2672	3.2	III	5.00	1438	2432	3173	5301	**SK 4282 - 160MH/4**		
	326	2901	3.2	III	5.43	1458	2507	3238	5405			
	292	3238	3.0	III	6.06	1494	2585	3326	5544			
	248	3810	2.8	III	7.13	1530	2720	3458	5744			
	212	4451	2.5	III	8.33	1566	2842	3580	5940			
	192	4932	2.9	III	9.23	1625	2981	3697	6125			
	163	5797	2.6	III	10.85	1654	3103	3836	6314			
	140	6775	2.3	III	12.68	1674	3231	3951	6509			
	116	8122	2.0	III	15.20	1712	3400	4118	6743			
	97	9714	1.6	II	18.18	1726	3539	4255	6750			
	83	11461	1.3	I	21.45	1730	3654	4406	6750			
	79	11963	1.3	I	22.39	1683	3650	4399	6750			
	67	14026	1.0	I	26.25	1692	3773	4545	6750			
	67	14122	1.1	I	26.43	1667	3762	4525	6750			
	55	17280	0.8	*	32.34	1593	3816	4655	6750			
	136	6946	3.1	III	13.00	2666	4948	5798	9000	**SK 5282 - 160M/4**	362	344
	115	8218	2.8	III	15.38	2768	5258	6050	9000	**SK 5282 - 160MH/4**		
	101	9399	2.6	III	17.59	2828	5499	6242	9000			
	94	10088	2.3	III	18.88	2887	5659	6363	9000			
	87	10879	2.5	III	20.36	2889	5760	6442	9000			
	71	13358	1.9	II	25.00	2993	6181	6764	9000			
	58	16297	1.6	II	30.50	3044	6570	7040	9000			
	53	17862	1.1	I	33.43	3062	6262	7187	9000			
	43	21800	1.0	I	40.80	3047	6518	7434	9000			
	77	12263	3.3	III	22.95	4793	8199	10024	13500	**SK 6282 - 160M/4**	547	348
	68	13919	2.9	III	26.05	4907	8548	10325	13500	**SK 6282 - 160MH/4**		
	59	15976	2.5	III	29.90	5040	8984	10674	13500			
	45	21095	1.3	I	39.48	5162	9765	11270	13500			
	36	26583	1.3	I	49.75	5306	10463	11867	13500			
	29	32636	1.2	I	61.08	5434	10463	12427	13500			
	42	22687	1.8	II	42.46	5191	10001	11441	13500	**SK 6382 - 160M/4**	540	350
	35	27288	1.6	II	51.07	5254	10463	11876	13500	**SK 6382 - 160MH/4**		
	30	31878	1.5	II	59.66	5292	10463	12229	13500			
	24	39273	1.3	I	73.50	5243	10463	12038	13500			
	24	40170	1.3	I	75.18	5297	10463	11977	13500			
	19	49494	1.1	I	92.63	5132	10463	11257	13500			
	15	61335	0.8	*	114.79	3854	10463	10022	13500			
	47	19914	2.9	III	37.27	5846	10559	13543	18000	**SK 7282 - 160M/4**	686	352
	39	24055	1.6	II	45.02	5994	11241	14137	18000	**SK 7282 - 160MH/4**		
	39	24403	2.1	III	45.67	6107	11385	14267	18000			
	31	30408	1.6	II	56.91	6210	12179	14920	18000			
	25	37258	1.4	II	69.73	6433	13050	15680	18000			
	38	24931	2.5	III	46.66	6062	11441	14283	18000	**SK 7382 - 160M/4**	701	354
	33	28522	2.2	III	53.38	6170	11927	14715	18000	**SK 7382 - 160MH/4**		
	30	31803	2.0	III	59.52	6188	12317	15012	18000			
	26	36387	1.8	II	68.10	6257	12841	15426	18000			
	22	42110	1.6	II	78.81	6264	13050	15883	18000			
	19	49788	1.3	I	93.18	6323	13050	16441	18000			
	17	56953	1.2	I	106.59	6269	13050	16823	18000			
	14	65919	1.0	I	123.37	6156	13050	16909	18000			
	12	80453	0.8	*	150.57	5794	13050	16031	18000			

(AGMA Class I = f_B 1.0 - 1.39 II = f_B 1.4 - 1.99 III = f_B ≥ 2.0 * = f_B < 1.0) **(Model Type in blue is an Energy Efficient motor)**

Send Quote Requests to info@automatedpt.com
Call +1(800)985-6929 To Order or Order Online At Nordgearmotors.com

DRIVESYSTEMS

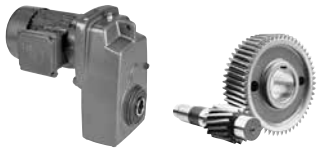

15 hp Gearmotors

Motor Power P_n [hp]	Output Speed n_2 [rpm]	Output Torque T_2 [lb-in]	Service Factor f_B	AGMA Class	Gear Ratio i_{tot}	Standard Bearings F_{RN} OHL [lb]	Standard Bearings F_{AN} Thrust [lb]	Heavy Duty Bearings (VL) F_{RVL} OHL [lb]	Heavy Duty Bearings (VL) F_{AVL} Thrust [lb]	Model Type	Weight [lb]	Dim. Page
15	30	31760	1.8	II	59.44	8064	14704			**SK 8282 - 160M/4** SK 8282 - 160MH/4	968	356
	31	30686	3.3	III	57.43	8017	14470	17582	23625	**SK 8382 - 160M/4** SK 8382 - 160MH/4	977	358
	27	34849	2.9	III	65.22	8190	15158	18099	23625			
	23	40443	2.6	III	75.69	8363	15932	18675	23625			
	19	48591	2.2	III	90.94	8528	16425	19424	23625			
	17	55147	1.9	II	103.21	8613	16425	19919	23625			
	15	63301	1.7	II	118.47	8658	16425	20426	23625			
	14	66993	1.6	II	125.38	8777	16425	20736	23625			
	12	76894	1.4	II	143.91	8771	16425	21240	23625			
	12	81660	1.4	II	152.83	8595	16425	21321	23625			
	9.5	99202	1.1	I	185.66	8539	16425	22068	23625			
	7.3	129317	0.9	*	242.02	7727	16425	22500	23625			
	18	53908	3.9	III	100.89	12575	22950	24057	29250	**SK 9382 - 160M/4** SK 9382 - 160MH/4	1643	362
	15	61752	3.6	III	115.57	12931	22950	24851	29250			
	13	72614	3.1	III	135.90	13340	22950	25855	29250			
	12	77311	2.7	III	144.69	13313	22950	26161	29250			
	10	93533	2.4	III	175.05	13835	22950	27000	29250			
	8.6	109365	1.8	II	204.68	14063	22950	27000	29250			
	6.1	155621	1.4	II	291.25	14074	22950	27000	29250			
	5	188274	1.2	I	352.36	14202	22950	27000	29250			
	4.3	219943	1.0	I	411.63	10355	22950	27000	29250	**SK 9382/52 - 160M/4** SK 9382/52 - 160MH/4	1806	375
	9.8	96541	3.2	III	180.68			30317	33750	**SK 10382 - 160M/4** SK 10382 - 160MH/4	2886	366
	6.7	140660	2.1	III	263.25			29588	33750			
	6.3	151133	1.9	II	282.85			29372	33750			
	5.3	177737	1.8	II	332.64			28744	33750			
	5	190967	1.6	II	357.40			28388	33750			
	4.8	195808	1.6	II	366.46			28249	33750	**SK 10382/52 - 160M/4** SK 10382/52 - 160MH/4	3050	375
	3.7	254204	1.2	I	475.75			26237	33750			
	3.1	308753	1.0	I	577.84			23672	33750			
	2.6	369944	0.8	*	692.36			19676	33750			
	5.7	166954	2.7	III	312.46			32369	38250	**SK 11382/52 - 160M/4** SK 11382/52 - 160MH/4	4897	375
	4.9	194189	2.3	III	363.43			31757	38250			
	3.7	256357	2.1	III	479.78			29950	38250			
	2.9	322020	1.6	II	602.67			27306	38250			
	2.4	391172	1.4	II	732.09			23436	38250			
	1.8	514542	1.0	I	962.98			10204	38250			
	1.5	616795	0.9	*	1154.35				38250			
	11.0	82473	3.6	III	154.35			33640	33577	**SK 12382 - 160M/4** SK 12382 - 160MH/4	4734	372
	8.8	107800	3.2	III	201.75			33354	35975			

(AGMA Class I = f_B 1.0 - 1.39 II = f_B 1.4 - 1.99 III = f_B ≥ 2.0 * = f_B < 1.0) **(Model Type in blue is an Energy Efficient motor)**

Send Quote Requests to info@automatedpt.com
Call +1(800)985-6929 To Order or Order Online At Nordgearmotors.com

20 hp Gearmotors



DRIVESYSTEMS

Motor Power P_n [hp]	Output Speed n_2 [rpm]	Output Torque T_2 [lb-in]	Service Factor f_B	AGMA Class	Gear Ratio i_{tot}	Standard Bearings F_{RN} OHL [lb]	Standard Bearings F_{AN} Thrust [lb]	Heavy Duty Bearings (VL) F_{RVL} OHL [lb]	Heavy Duty Bearings (VL) F_{AVL} Thrust [lb]	Model Type	Weight [lb]	Dim. Page
20	376	3357	2.5	III	4.70	1330	2255	3053	5076	**SK 4282 - 160L/4**	320	340
	353	3570	2.4	III	5.00	1341	2295	3096	5141	SK 4282 - 160LH/4		
	325	3877	2.4	III	5.43	1359	2347	3155	5234			
	291	4327	2.2	III	6.06	1373	2417	3233	5344			
	248	5091	2.1	III	7.13	1393	2516	3341	5508			
	212	5947	1.9	II	8.33	1402	2610	3449	5661			
	191	6590	2.2	III	9.23	1460	2725	3564	5837			
	163	7747	1.9	II	10.85	1458	2810	3663	5987			
	139	9053	1.7	II	12.68	1438	2891	3760	6125			
	116	10852	1.5	II	15.20	1440	2986	3888	6293			
	97	12980	1.2	I	18.18	1382	3040	3989	6406			
	82	15315	1.0	I	21.45	1332	3103	4086	6518			
	79	15986	0.9	*	22.39	1265	3040	4070	6458			
	67	18742	0.8	*	26.25	1213	3103	4160	6581			
	67	18870	0.8	*	26.43	1168	3049	4131	6530			
	246	5119	2.5	III	7.17	2207	3845	4883	8177	**SK 5282 - 160L/4**	399	344
	203	6212	2.3	III	8.70	2291	4120	5105	8566	SK 5282 - 160LH/4		
	187	6754	2.6	III	9.46	2363	4262	5243	8789			
	165	7647	2.5	III	10.71	2417	4442	5398	9000			
	136	9282	2.3	III	13.00	2477	4730	5643	9000			
	115	10981	2.1	III	15.38	2554	4995	5868	9000			
	100	12559	1.9	II	17.59	2583	5207	6032	9000			
	93	13480	1.7	II	18.88	2626	5342	6149	9000			
	87	14536	1.9	II	20.36	2601	5420	6206	9000			
	71	17849	1.4	II	25.00	2639	5760	6476	9000			
	58	21776	1.2	I	30.50	2601	6014	6687	9000			
	53	23868	0.9	*	33.43	2570	5544	6784	9000			
	43	29130	0.8	*	40.80	2423	5641	6946	9000			
	119	10588	2.5	III	14.83	4093	6721	8780	12629	**SK 6282 - 160L/4**	584	348
	94	13351	2.5	III	18.70	4304	7304	9297	13381	SK 6282 - 160LH/4		
	77	16386	2.4	III	22.95	4484	7877	9765	13500			
	68	18599	2.2	III	26.05	4559	8213	10037	13500			
	59	21348	1.9	II	29.90	4628	8575	10330	13500			
	45	28188	1.0	I	39.48	4568	9203	10787	13500			
	35	35520	1.0	I	49.75	4577	9844	11268	13500			
	29	43609	0.9	*	61.08	4572	10463	11678	13500			
	72	17435	2.2	III	24.42	4437	7965	9824	13500	**SK 6382 - 160L/4**	578	350
	61	20505	2.0	III	28.72	4509	8386	10170	13500	SK 6382 - 160LH/4		
	57	22069	1.8	II	30.91	4545	8575	10312	13500			
	49	25946	1.6	II	36.34	4577	8984	10645	13500			
	42	30315	1.3	I	42.46	4563	9380	10928	13500			
	35	36462	1.2	I	51.07	4491	9844	11273	13500			
	30	42595	1.1	I	59.66	4372	10179	11473	13500			
	24	52477	0.9	*	73.50	4109	10463	10982	13500			
	23	53676	1.0	I	75.18	4163	10463	10865	13500			
	19	66135	0.8	*	92.63	1613	10463	9389	13500			
	66	19199	2.6	III	26.89	5207	9155	12290	17926	**SK 7282 - 160L/4**	723	352
	51	24732	2.1	III	34.64	5411	9936	13019	18000	SK 7282 - 160LH/4		
	47	26610	2.2	III	37.27	5407	10130	13160	18000			
	39	32143	1.2	I	45.02	5414	10679	13651	18000			
	39	32607	1.6	II	45.67	5555	10870	13820	18000			
	31	40632	1.2	I	56.91	5495	11477	14324	18000			
	25	49785	1.0	I	69.73	5544	12218	14931	18000			

(AGMA Class I = f_B 1.0 - 1.39 II = f_B 1.4 - 1.99 III = f_B ≥ 2.0 * = f_B < 1.0) **(Model Type in blue is an Energy Efficient motor)**

Send Quote Requests to info@automatedpt.com
Call +1(800)985-6929 To Order or Order Online At Nordgearmotors.com

DRIVESYSTEMS



20 hp Gearmotors

Motor Power P_n [hp]	Output Speed n_2 [rpm]	Output Torque T_2 [lb-in]	Service Factor f_B	AGMA Class	Gear Ratio i_{tot}	Standard Bearings F_{RN} OHL [lb]	Standard Bearings F_{AN} Thrust [lb]	Heavy Duty Bearings (VL) F_{RVL} OHL [lb]	Heavy Duty Bearings (VL) F_{AVL} Thrust [lb]	Model Type	Weight [lb]	Dim. Page
20	58	21719	2.5	III	30.42	5236	9439	12542	18000	**SK 7382 - 160L/4**	739	354
	48	26360	2.2	III	36.92	5351	10049	13102	18000	SK 7382 - 160LH/4		
	38	33314	1.9	II	46.66	5483	10870	13806	18000			
	33	38112	1.6	II	53.38	5508	11277	14155	18000			
	30	42495	1.5	II	59.52	5423	11552	14369	18000			
	26	48621	1.3	I	68.10	5346	11966	14684	18000			
	22	56268	1.2	I	78.81	5240	12416	14992	18000			
	19	66528	1.0	I	93.18	5103	12924	15401	18000			
	17	76102	0.9	*	106.59	4871	13050	15624	18000			
	14	88082	0.8	*	123.37	4460	13050	15476	18000			
	45	27923	3.0	III	39.11	6998	12188			**SK 8282 - 160L/4**	1005	356
	37	33921	2.8	III	47.51	7265	13079			SK 8282 - 160LH/4		
	30	42438	1.4	II	59.44	7391	14036					
	24	51556	1.4	II	72.21	7585	14990					
	57	22076	2.8	III	30.92	6710	11214	14774	21256	**SK 8382 - 160L/4**	1014	358
	49	25617	2.7	III	35.88	6894	11822	15291	22091	SK 8382 - 160LH/4		
	40	31122	2.7	III	43.59	7187	12749	16043	23139			
	37	34128	2.7	III	47.80	7218	13059	16364	23553			
	31	41003	2.5	III	57.43	7364	13878	17012	23625			
	27	46565	2.1	III	65.22	7468	14447	17465	23625			
	23	54040	2.0	III	75.69	7502	15158	17960	23625			
	19	64928	1.6	II	90.94	7488	15932	18563	23625			
	17	73689	1.5	II	103.21	7418	16425	18916	23625			
	15	84584	1.3	I	118.47	7268	16425	19280	23625			
	14	89517	1.2	I	125.38	7342	16425	19557	23625			
	12	102747	1.1	I	143.91	7103	16425	19863	23625			
	12	109116	1.1	I	152.83	6764	16425	19832	23625			
	9.5	132556	0.8	*	185.66	6347	16425	20275	23625			
	21	59395	2.9	III	83.19	11311	21182	22401	29250	**SK 9382 - 160L/4**	1680	362
	17	72032	2.9	III	100.89	11813	22766	23526	29250	SK 9382 - 160LH/4		
	15	82513	2.7	III	115.57	12006	22950	24235	29250			
	13	97028	2.3	III	135.90	12224	22950	25092	29250			
	12	103304	2.1	III	144.69	12103	22950	25328	29250			
	10	124980	1.8	II	175.05	12413	22950	26426	29250			
	8.6	146135	1.3	I	204.68	12373	22950	27000	29250			
	6.1	207944	1.0	I	291.25	11471	22950	27000	29250			
	5	251574	0.9	*	352.36	11142	22950	27000	29250			
	10	120061	2.4	III	168.16			29963	33750	**SK 10382 - 160L/4**	2924	366
	9.8	129000	2.4	III	180.68			29808	33750	SK 10382 - 160LH/4		
	6.7	187952	1.6	II	263.25			28472	33750			
	6.2	201946	1.4	II	282.85			28069	33750			
	5.3	237495	1.4	II	332.64			26883	33750			
	4.9	255173	1.2	I	357.40			26199	33750			
	4.8	261641	1.2	I	366.46			25931	33750	**SK 10382/52 - 160L/4**	3087	375
	3.7	339671	0.9	*	475.75			21834	33750	SK 10382/52 - 160LH/4		
	3.1	412560	0.8	*	577.84			15748	33750			
	10	122774	2.7	III	171.96			33147	34670	**SK 11382 - 160L/4**	4772	370
	7.9	160472	2.4	III	224.76			32499	37148	SK 11382 - 160LH/4		

(AGMA Class I = f_B 1.0 - 1.39 II = f_B 1.4 - 1.99 III = f_B ≥ 2.0 * = f_B < 1.0) **(Model Type in blue is an Energy Efficient motor)**

Send Quote Requests to info@automatedpt.com
Call +1(800)985-6929 To Order or Order Online At Nordgearmotors.com

20 hp, 25 hp Gearmotors



DRIVESYSTEMS

GEARMOTORS

Motor Power P_n [hp]	Output Speed n_2 [rpm]	Output Torque T_2 [lb-in]	Service Factor f_B	AGMA Class	Gear Ratio i_{tot}	Standard Bearings F_{RN} OHL [lb]	Standard Bearings F_{AN} Thrust [lb]	Heavy Duty Bearings (VL) F_{RVL} OHL [lb]	Heavy Duty Bearings (VL) F_{AVL} Thrust [lb]	Model Type	Weight [lb]	Dim. Page
20	5.9	212327	2.1	III	297.39			31291	38250	**SK 11382/52 - 160L/4**	4935	375
	5.6	223087	2.0	III	312.46			30992	38250	SK 11382/52 - 160H/4		
	4.9	259478	1.7	II	363.43			29842	38250			
	3.7	342548	1.6	II	479.78			26294	38250			
	2.9	430288	1.2	I	602.67			20522	38250			
	2.4	522690	1.0	I	732.09			8393	38250			
	1.8	687538	0.8	*	962.98				38250			
	15	83784	3.0	III	117.35			33626	30742	**SK 12382 - 160L/4**	4772	372
	13	97971	2.9	III	137.22			33473	31950	SK 12382 - 160LH/4		
	11	110201	2.7	III	154.35			33323	32886			
	8.7	144043	2.4	III	201.75			32805	35062			
25	405	3890	3.5	III	4.32	1913	3132	4239	7101	**SK 5282 - 180MX/4**	452	344
	349	4510	3.3	III	5.01	1969	3303	4394	7369	SK 5282 - 180MH/4		
	331	4762	3.3	III	5.29	1991	3366	4457	7475			
	306	5140	3.1	III	5.71	2021	3465	4543	7607			
	276	5698	3.3	III	6.33	2057	3578	4649	7819			
	244	6455	3.0	III	7.17	2104	3724	4788	8035			
	201	7832	2.7	III	8.70	2158	3958	5011	8404			
	185	8516	2.4	III	9.46	2225	4120	5135	8593			
	163	9641	2.3	III	10.71	2255	4268	5272	8831			
	135	11703	2.0	III	13.00	2286	4514	5492	9000			
	114	13846	1.7	II	15.38	2322	4752	5688	9000			
	99	15835	1.5	II	17.59	2322	4898	5821	9000			
	93	16996	1.4	II	18.88	2356	5051	5931	9000			
	86	18329	1.5	II	20.36	2295	5058	5963	9000			
	70	22506	1.1	I	25.00	2273	5326	6185	9000			
	164	9578	4.0	III	10.64	3674	5828	7958	11491	**SK 6282 - 180MX/4**	637	348
	142	11118	3.5	III	12.35	3773	6143	8255	11882	SK 6282 - 180MH/4		
	118	13350	3.0	III	14.83	3890	6530	8593	12389			
	94	16834	2.3	III	18.70	4039	7074	9079	13061			
	76	20660	1.9	II	22.95	4178	7578	9536	13500			
	67	23451	1.7	II	26.05	4203	7877	9758	13500			
	59	26917	1.5	II	29.90	4208	8199	9999	13500			
	72	21984	1.9	II	24.42	4077	7641	9549	13500	**SK 6382 - 180MX/4**	631	350
	61	25855	1.6	II	28.72	4093	7979	9828	13500	SK 6382 - 180MH/4		
	57	27826	1.4	II	30.91	4082	8134	9954	13500			
	48	32714	1.2	I	36.34	4012	8467	10199	13500			
	41	38224	1.1	I	42.46	3917	8768	10411	13500			
	34	45975	1.0	I	51.07	3690	9086	10609	13500			
	29	53708	0.9	*	59.66	3431	9290	10706	13500			
	23	67679	0.8	*	75.18		9655	9167	13500			
	88	17978	2.9	III	19.97	4691	8015	11225	16414	**SK 7282 - 180MX/4**	776	352
	77	20588	2.5	III	22.87	4788	8370	11588	16922	SK 7282 - 180MH/4		
	65	24207	2.1	III	26.89	4903	8825	12022	17557			
	51	31184	1.6	II	34.64	4984	9545	12677	18000			
	47	33552	1.7	II	37.27	4912	9684	12780	18000			
	38	41114	1.3	I	45.67	4991	10341	13381	18000			

(AGMA Class I = f_B 1.0 - 1.39 II = f_B 1.4 - 1.99 III = f_B ≥ 2.0 * = f_B < 1.0) **(Model Type in blue is an Energy Efficient motor)**

Send Quote Requests to info@automatedpt.com
Call +1(800)985-6929 To Order or Order Online At Nordgearmotors.com

DRIVESYSTEMS



25 hp Gearmotors

Motor Power P_n [hp]	Output Speed n_2 [rpm]	Output Torque T_2 [lb-in]	Service Factor f_B	AGMA Class	Gear Ratio i_{tot}	Standard Bearings F_{RN} OHL [lb]	Standard Bearings F_{AN} Thrust [lb]	Heavy Duty Bearings (VL) F_{RVL} OHL [lb]	Heavy Duty Bearings (VL) F_{AVL} Thrust [lb]	Model Type	Weight [lb]	Dim. Page
25	75	21119	2.8	III	23.46	4714	8370	11581	16922	**SK 7382 - 180MX/4**	792	354
	65	24198	2.4	III	26.88	4788	8739	11925	17447	SK 7382 - 180MH/4		
	58	27385	2.1	III	30.42	4824	9083	12233	17870			
	47	33237	1.8	II	36.92	4856	9623	12701	18000			
	38	42005	1.5	II	46.66	4871	10276	13295	18000			
	33	48054	1.3	I	53.38	4799	10663	13613	18000			
	29	53582	1.2	I	59.52	4619	10800	13707	18000			
	26	61306	1.0	I	68.10	4412	11097	13939	18000			
	22	70947	0.9	*	78.81	4138	11367	14144	18000			
	19	83884	0.8	*	93.18	3807	11795	14411	18000			
	57	27835	3.8	III	30.92	6377	10949	14517	20885	**SK 8382 - 180MX/4**	1067	358
	49	32300	3.3	III	35.88	6503	11525	14992	21598	SK 8382 - 180MH/4		
	40	39241	2.4	III	43.59	6721	12287	15689	22592			
	37	43031	2.5	III	47.80	6698	12627	15914	22955			
	30	51700	2.1	III	57.43	6714	13291	16466	23625			
	27	58713	1.7	II	65.22	6721	13768	16823	23625			
	23	68139	1.6	II	75.69	6629	14308	17231	23625			
	19	81867	1.3	I	90.94	6406	14990	17669	23625			
	17	92913	1.2	I	103.21	6185	15354	17901	23625			
	15	106650	1.0	I	118.47	5850	15779	18158	23625			
	14	112871	1.0	I	125.38	5852	16110	18387	23625			
	12	129552	0.9	*	143.91	5346	16425	18482	23625			
	27	58740	3.7	III	65.25	10294	18963	20743	27335	**SK 9382 - 180MX/4**	1733	362
	24	64988	3.3	III	72.19	10454	19611	21224	27911	SK 9382 - 180MH/4		
	21	74890	2.8	III	83.19	10649	20579	21911	28775			
	17	90824	2.5	III	100.89	10964	22048	22975	29250			
	15	104040	2.2	III	115.57	11059	22950	23598	29250			
	13	122342	1.8	II	135.90	11135	22950	24415	29250			
	12	130255	1.6	II	144.69	10856	22950	24496	29250			
	10	157586	1.4	II	175.05	10901	22950	25443	29250			
	8.7	180668	1.2	I	200.69	7526	20185	21553	27556	**SK 9382/52 - 180MX/4**	1896	375
	7.5	209907	1.0	I	233.17	6869	20745	21823	27779	SK 9382/52 - 180MH/4		
	5.9	265154	0.8	*	294.54	5414	21182	22084	27689			
	12	126402	2.5	III	140.41			29855	33750	**SK 10382 - 180MX/4**	2977	366
	10	151383	1.9	II	168.16			29367	33750	SK 10382 - 180MH/4		
	9.7	162654	1.9	II	180.68			29113	33750			
	5.8	271582	1.1	I	301.68			25502	33750	**SK 10382/52 - 180MX/4**	3140	375
	4.8	329899	0.9	*	366.46			22451	33750	SK 10382/52 - 180MH/4		
	10	154804	3.9	III	171.96			32609	34229	**SK 11382 - 180MX/4**	4825	370
	7.8	202336	3.0	III	224.76			31554	36495	SK 11382 - 180MH/4		
	5.9	267720	1.7	II	297.39			29552	38250	**SK 11382/52 - 180MX/4**	4988	375
	5.6	281287	1.6	II	312.46			29045	38250	SK 11382/52 - 180MH/4		
	4.8	327171	1.4	II	363.43			27063	38250			
	3.6	431913	1.2	I	479.78			20387	38250			
	2.9	542543	1.0	I	602.67				38250			
	2.4	659051	0.8	*	732.09				38250			
	25	62224	5.1	III	69.12			33813	26528	**SK 12382 - 180MX/4**	4825	372
	21	74404	4.8	III	82.65			33714	27790	SK 12382 - 180MH/4		
	17	90815	4.6	III	100.88			33554	29205			
	15	105642	4.3	III	117.35			33381	30303			
	13	123530	4.1	III	137.22			33136	31439			
	11	138951	3.9	III	154.35			32891	32310			
	8.7	181622	3.4	III	201.75			32054	34229			

(AGMA Class I = f_B 1.0 - 1.39 II = f_B 1.4 - 1.99 III = f_B ≥ 2.0 * = f_B < 1.0) **(Model Type in blue is an Energy Efficient motor)**

Send Quote Requests to info@automatedpt.com
Call +1(800)985-6929 To Order or Order Online At Nordgearmotors.com

30 hp Gearmotors



DRIVESYSTEMS

GEARMOTORS

Motor Power P_n [hp]	Output Speed n_2 [rpm]	Output Torque T_2 [lb-in]	Service Factor f_B	AGMA Class	Gear Ratio i_{tot}	Standard Bearings F_{RN} OHL [lb]	Standard Bearings F_{AN} Thrust [lb]	Heavy Duty Bearings (VL) F_{RVL} OHL [lb]	Heavy Duty Bearings (VL) F_{AVL} Thrust [lb]	Model Type	Weight [lb]	Dim. Page
30	406	4654	2.9	III	4.32	1841	3067	4174	7000	**SK 5282 - 180LX/4**	452	344
	350	5397	2.8	III	5.01	1890	3209	4327	7250	**SK 5282 - 180LH/4**		
	332	5699	2.7	III	5.29	1908	3265	4381	7355			
	307	6151	2.6	III	5.71	1931	3362	4464	7475			
	277	6819	2.7	III	6.33	1958	3465	4568	7670			
	245	7724	2.5	III	7.17	1991	3596	4694	7855			
	202	9372	2.2	III	8.70	2016	3796	4892	8177			
	186	10191	2.0	III	9.46	2081	3958	5009	8404			
	164	11538	1.9	II	10.71	2099	4082	5137	8593			
	135	14005	1.7	II	13.00	2086	4289	5315	8901			
	114	16569	1.4	II	15.38	2090	4471	5495	9000			
	100	18950	1.3	I	17.59	2048	4610	5603	9000			
	93	20339	1.1	I	18.88	2075	4707	5697	9000			
	86	21934	1.3	I	20.36	1973	4700	5702	9000			
	70	26932	1.0	I	25.00	1888	4898	5873	9000			
	187	10116	2.4	III	9.39	3371	5369	7544	10845	**SK 6282 - 180LX/4**	637	348
	165	11462	3.3	III	10.64	3512	5688	7814	11270	**SK 6282 - 180LH/4**		
	142	13305	2.9	III	12.35	3591	5958	8087	11657			
	118	15976	2.5	III	14.83	3670	6314	8406	12114			
	94	20145	1.9	II	18.70	3762	6829	8840	12731			
	76	24724	1.6	II	22.95	3843	7259	9250	13295			
	67	28064	1.4	II	26.05	3834	7506	9448	13500			
	59	32211	1.2	I	29.90	3780	7801	9664	13500			
	72	26308	1.6	II	24.42	3724	7270	9234	13295	**SK 6382 - 180LX/4**	631	350
	61	30940	1.3	I	28.72	3643	7567	9452	13500	**SK 6382 - 180LH/4**		
	57	33299	1.2	I	30.91	3600	7715	9558	13500			
	48	39149	1.0	I	36.34	3461	7954	9731	13500			
	41	45742	0.9	*	42.46	3245	8134	9855	13500			
	34	55018	0.8	*	51.07	2869	8318	9936	13500			
	29	64272	0.8	*	59.66	2448	8397	9646	13500			
	88	21514	2.4	III	19.97	4455	7774	11016	16076	**SK 7282 - 180LX/4**	776	352
	77	24638	2.1	III	22.87	4523	8105	11342	16574	**SK 7282 - 180LH/4**		
	65	28969	1.8	II	26.89	4568	8519	11732	17114			
	51	37318	1.4	II	34.64	4556	9155	12308	17984			
	47	40151	1.4	II	37.27	4433	9245	12371	18000			
	38	49200	1.0	I	45.67	4406	9747	12859	18000			
	75	25273	2.3	III	23.46	4424	8066	11318	16520	**SK 7382 - 180LX/4**	792	354
	65	28958	2.0	III	26.88	4430	8395	11619	16976	**SK 7382 - 180LH/4**		
	58	32771	1.8	II	30.42	4437	8699	11885	17361			
	48	39774	1.5	II	36.92	4383	9155	12278	17984			
	38	50267	1.2	I	46.66	4259	9731	12789	18000			
	33	57506	1.1	I	53.38	4084	9952	12998	18000			
	29	64121	1.0	I	59.52	3789	10033	13028	18000			
	26	73364	0.9	*	68.10	3474	10226	13149	18000			
	22	84902	0.8	*	78.81	3002	10341	13237	18000			
	62	30520	2.9	III	28.33	6008	10350	13957	20162	**SK 8282 - 180LX/4**	1058	356
	45	42133	2.0	III	39.11	6118	11396			**SK 8282 - 180LH/4**		

(AGMA Class I = f_B 1.0 - 1.39 II = f_B 1.4 - 1.99 III = f_B ≥ 2.0 * = f_B < 1.0) **(Model Type in blue is an Energy Efficient motor)**

Send Quote Requests to info@automatedpt.com
Call +1(800)985-6929 To Order or Order Online At Nordgearmotors.com

DRIVESYSTEMS



30 hp, 40 hp Gearmotors

Motor Power P_n [hp]	Output Speed n_2 [rpm]	Output Torque T_2 [lb-in]	Service Factor f_B	AGMA Class	Gear Ratio i_{tot}	Standard Bearings F_{RN} OHL [lb]	Standard Bearings F_{AN} Thrust [lb]	Heavy Duty Bearings (VL) F_{RVL} OHL [lb]	Heavy Duty Bearings (VL) F_{AVL} Thrust [lb]	Model Type	Weight [lb]	Dim. Page
30	57	33310	3.2	III	30.92	6017	10620	14193	20453	**SK 8382 - 180LX/4**	1067	358
	49	38653	2.8	III	35.88	6089	11106	14625	21085	SK 8382 - 180LH/4		
	40	46959	2.0	III	43.59	6219	11822	15237	21983			
	37	51495	2.1	III	47.80	6129	12112	15422	22266			
	31	61869	1.7	II	57.43	6048	12668	15896	22955			
	27	70261	1.4	II	65.22	5913	13059	16184	23400			
	23	81541	1.3	I	75.69	5731	13550	16470	23625			
	19	97969	1.1	I	90.94	5303	13968	16749	23625			
	17	111188	1.0	I	103.21	4901	14263	16846	23625			
	15	127627	0.9	*	118.47	4347	14447	16920	23625			
	14	135072	0.8	*	125.38	4340	14704	17087	23625			
	36	52184	3.5	III	48.44	9353	16652	18981	25027	**SK 9382 - 180LX/4**	1733	362
	32	59779	3.3	III	55.49	9542	17447	19640	25803	SK 9382 - 180LH/4		
	27	70294	3.1	III	65.25	9738	18394	20338	26687			
	24	77770	2.7	III	72.19	9833	19024	20801	27250			
	21	89620	2.4	III	83.19	9950	19928	21418	28049			
	17	108689	2.1	III	100.89	10145	21182	22385	29144			
	15	124503	1.8	II	115.57	10080	22048	22952	29250			
	13	146405	1.5	II	135.9	9963	22950	23567	29250			
	12	155874	1.4	II	144.69	9576	22950	23616	29250			
	10	188581	1.2	I	175.05	9403	22950	24431	29250			
	17	112804	2.8	III	104.71			30080	32132	**SK 10382 - 180LX/4**	2977	366
	12	151263	2.1	III	140.41			29369	33750	SK 10382 - 180LH/4		
	10	181158	1.6	II	168.16			28654	33750			
	9.7	194646	1.6	II	180.68			28283	33750			
	5.8	324999	1.0	I	301.68			22745	33750	**SK 10382/52 - 180LX/4**	3140	375
	4.8	394786	0.8	*	366.46			17546	33750	SK 10382/52 - 180LH/4		
	10	185252	3.2	III	171.96			31970	33685	**SK 11382 - 180LX/4**	4825	370
	7.8	242133	2.5	III	224.76			30418	35800	SK 11382 - 180LH/4		
	5.9	320377	1.4	II	297.39			27385	37989	**SK 11382/52 - 180LX/4**	4988	375
	5.6	336612	1.3	I	312.46			26597	38250	SK 11382/52 - 180LH/4		
	4.8	391522	1.1	I	363.43			23411	38250			
	3.7	516866	1.0	I	479.78			9725	38250			
	2.9	649255	0.8	*	602.67				38250			
	11	166281	3.2	III	154.35			32382	31592	**SK 12382 - 180LX/4**	4825	372
	8.7	217345	2.8	III	201.75			31154	33309	SK 12382 - 180LH/4		
40	405	6217	2.9	III	4.39	2743	3947	6098	8791	**SK 6282 - 200L/4**	794	348
	365	6912	2.8	III	4.88	2797	4095	6253	9020	SK 6282 - 200LH/4		
	324	7790	2.6	III	5.50	2858	4282	6442	9284			
	308	8187	2.5	III	5.78	2882	4345	6512	9389			
	297	8484	2.5	III	5.99	2905	4394	6572	9479			
	264	9546	2.8	III	6.74	2954	4574	6748	9725			
	228	11076	2.1	III	7.82	3006	4793	6977	10076			
	190	13300	1.8	II	9.39	3060	5092	7252	10451			
	167	15070	2.5	III	10.64	3202	5360	7538	10845			
	144	17492	2.2	III	12.35	3224	5598	7760	11162			
	120	21005	1.9	II	14.83	3238	5884	8026	11545			
	95	26486	1.5	II	18.70	3229	6262	8368	12035			
	78	32506	1.2	I	22.95	3200	6624	8683	12490			

(AGMA Class I = f_B 1.0 - 1.39 II = f_B 1.4 - 1.99 III = f_B ≥ 2.0 * = f_B < 1.0) **(Model Type in blue is an Energy Efficient motor)**

Send Quote Requests to info@automatedpt.com
Call +1(800)985-6929 To Order or Order Online At Nordgearmotors.com

40 hp Gearmotors



DRIVESYSTEMS

GEARMOTORS

Motor Power P_n [hp]	Output Speed n_2 [rpm]	Output Torque T_2 [lb-in]	Service Factor f_B	AGMA Class	Gear Ratio i_{tot}	Standard Bearings F_{RN} OHL [lb]	Standard Bearings F_{AN} Thrust [lb]	Heavy Duty Bearings (VL) F_{RVL} OHL [lb]	Heavy Duty Bearings (VL) F_{AVL} Thrust [lb]	Model Type	Weight [lb]	Dim. Page
40	206	12266	2.9	III	8.66	3501	5481	8674	12679	**SK 7282 - 200L/4**	933	352
	188	13427	3.3	III	9.48	3616	5733	8937	13050	SK 7282 - 200LH/4		
	179	14050	2.7	III	9.92	3562	5733	8962	13093			
	159	15807	3.1	III	11.16	3706	6035	9275	13543			
	138	18257	2.8	III	12.89	3767	6311	9576	13984			
	109	23073	2.5	III	16.29	3870	6818	10105	14742			
	89	28285	1.8	II	19.97	3971	7268	10562	15444			
	78	32393	1.6	II	22.87	3944	7542	10834	15820			
	66	38086	1.3	I	26.89	3902	7862	11129	16283			
	76	33228	1.8	II	23.46	3805	7470	10769	15770	**SK 7382 - 200L/4**	948	354
	66	38072	1.5	II	26.88	3719	7700	10989	16076	SK 7382 - 200LH/4		
	59	43086	1.4	II	30.42	3618	7938	11214	16360			
	48	52293	1.1	I	36.92	3391	8183	11453	16760			
	38	66088	0.9	*	46.66	3017	8519	11725	17222			
	102	24645	3.0	III	17.40	5112	8323	12062	17395	**SK 8282 - 200L/4**	1215	356
	84	29928	3.0	III	21.13	5279	8930	12618	18225	SK 8282 - 200LH/4		
	73	34701	2.7	III	24.50	5346	9326	13007	18788			
	63	40126	2.2	III	28.33	5375	9722	13381	19305			
	58	43794	2.4	III	30.92	5306	9911	13574	19557	**SK 8382 - 200L/4**	1224	358
	50	50820	2.1	III	35.88	5267	10316	13898	20063	SK 8382 - 200LH/4		
	41	61740	1.5	II	43.59	5220	10895	14418	20786			
	37	67703	1.6	II	47.80	4995	11054	14447	20916			
	31	81343	1.3	I	57.43	4676	11414	14724	21357			
	27	92376	1.1	I	65.22	4388	11635	14848	21564			
	24	107206	1.0	I	75.69	3888	11880	14969	21737			
	20	128806	0.8	*	90.94	3094	11995	14877	21773			
	50	50437	3.3	III	35.61	8258	14301	17136	22588	**SK 9382 - 200L/4**	1890	362
	42	59389	3.1	III	41.93	8408	15149	17784	23364	SK 9382 - 200LH/4		
	37	68609	2.9	III	48.44	8543	15820	18360	24086			
	32	78595	2.7	III	55.49	8591	16468	18889	24710			
	27	92419	2.3	III	65.25	8627	17280	19501	25394			
	25	102249	2.1	III	72.19	8579	17813	19888	25886			
	21	117829	1.8	II	83.19	8492	18423	20369	26390			
	18	142899	1.6	II	100.89	8417	19519	21200	27250			
	15	163691	1.4	II	115.57	8156	20122	21542	27644			
	13	192486	1.2	I	135.9	7643	20745	21962	28049			
	19	129386	2.4	III	91.35			29801	30233	**SK 10382 - 200L/4**	3133	366
	17	148309	2.1	III	104.71			29432	31217	SK 10382 - 200LH/4		
	13	198874	1.6	II	140.41			28161	33230			
	16	159173	3.8	III	112.38			32524	29581	**SK 11382 - 200L/4**	4981	370
	14	185163	3.3	III	130.73			31973	30645	SK 11382 - 200LH/4		
	12	216522	2.8	III	152.87			31176	31743			
	10	243561	2.5	III	171.96			30373	32519			
	7.9	318346	1.9	II	224.76			27477	34340			
	8.8	285755	2.1	III	201.75			28870	31543	**SK 12382 - 200L/4**	4981	372
										SK 12382 - 200LH/4		

(AGMA Class I = f_B 1.0 - 1.39 II = f_B 1.4 - 1.99 III = f_B ≥ 2.0 * = f_B < 1.0) **(Model Type in blue is an Energy Efficient motor)**

Send Quote Requests to info@automatedpt.com
Call +1(800)985-6929 To Order or Order Online At Nordgearmotors.com

DRIVESYSTEMS



50 hp Gearmotors

Motor Power P_n [hp]	Output Speed n_2 [rpm]	Output Torque T_2 [lb-in]	Service Factor f_B	AGMA Class	Gear Ratio i_{tot}	Standard Bearings F_{RN} OHL [lb]	Standard Bearings F_{AN} Thrust [lb]	Heavy Duty Bearings (VL) F_{RVL} OHL [lb]	Heavy Duty Bearings (VL) F_{AVL} Thrust [lb]	Model Type	Weight [lb]	Dim. Page
50	402	7838	2.3	III	4.39	2608	3834	5994	8651	**SK 6282 - 225S/4**	867	348
	362	8714	2.2	III	4.88	2648	3971	6143	8847	SK 6282 - 225SH/4		
	321	9821	2.1	III	5.50	2693	4127	6307	9106			
	305	10321	2.0	III	5.78	2700	4194	6374	9194			
	295	10696	2.0	III	5.99	2718	4241	6422	9252			
	262	12035	2.2	III	6.74	2736	4388	6599	9479			
	226	13964	1.7	II	7.82	2756	4597	6784	9772			
	188	16767	1.5	II	9.39	2754	4806	7025	10091			
	166	18999	2.0	III	10.64	2894	5092	7279	10487			
	143	22053	1.8	II	12.35	2855	5267	7459	10742			
	119	26481	1.5	II	14.83	2772	5481	7661	11039			
	94	33391	1.2	I	18.70	2648	5762	7931	11399			
	77	40980	1.0	I	22.95	2511	6046	8141	11732			
	414	7607	3.0	III	4.26	2925	4167	7180	10494	**SK 7282 - 225S/4**	1005	352
	333	9464	2.8	III	5.30	3047	4500	7589	11081	SK 7282 - 225SH/4		
	278	11357	2.6	III	6.36	3141	4784	7920	11572			
	236	13374	2.4	III	7.49	3206	5042	8222	12008			
	204	15464	2.3	III	8.66	3256	5292	8494	12398			
	186	16928	2.6	III	9.48	3377	5508	8748	12762			
	178	17714	2.1	III	9.92	3287	5508	8744	12762			
	158	19928	2.4	III	11.16	3427	5798	9056	13219			
	137	23017	2.3	III	12.89	3431	6035	9313	13606			
	108	29088	2.0	III	16.29	3454	6444	9756	14254			
	88	35659	1.4	II	19.97	3454	6827	10163	14861			
	77	40838	1.3	I	22.87	3362	7027	10375	15149			
	66	48016	1.1	I	26.89	3193	7245	10584	15494			
	75	41891	1.4	II	23.46	3150	6905	10256	15005	**SK 7382 - 225S/4**	1021	354
	66	47998	1.2	I	26.88	2977	7097	10400	15221	SK 7382 - 225SH/4		
	58	54319	1.1	I	30.42	2768	7175	10519	15444			
	48	65926	0.9	*	36.92	2322	7315	10604	15595			
	38	83318	0.8	*	46.66	1685	7398	10670	15770			
	101	31070	2.4	III	17.40	4723	7994	11754	16983	**SK 8282 - 225S/4**	1288	356
	84	37731	2.4	III	21.13	4813	8512	12245	17678	SK 8282 - 225SH/4		
	72	43748	2.1	III	24.50	4788	8858	12569	18135			
	62	50587	1.7	II	28.33	4732	9207	12872	18608			
	57	55212	1.9	II	30.92	4586	9311	12962	18727	**SK 8382 - 225S/4**	1297	358
	49	64069	1.7	II	35.88	4397	9599	13201	19091	SK 8382 - 225SH/4		
	40	77836	1.2	I	43.59	4181	10024	13547	19649			
	37	85354	1.3	I	47.80	3827	10089	13518	19618			
	31	102549	1.0	I	57.43	3249	10202	13610	19778			
	27	116460	0.9	*	65.22	2700	10301	13534	19809			
	23	135155	0.8	*	75.69	1906	10217	13367	19681			
	66	48016	2.6	III	26.89	6122	10082	13543	17762	**SK 9282 - 225S/4**	1951	360
	57	54980	2.5	III	30.79	6199	10512	13948	18311	SK 9282 - 225SH/4		
	51	61390	2.3	III	34.38	6226	10836	14272	18695			

(AGMA Class I = f_B 1.0 - 1.39 II = f_B 1.4 - 1.99 III = f_B ≥ 2.0 * = f_B < 1.0) **(Model Type in blue is an Energy Efficient motor)**

Send Quote Requests to info@automatedpt.com
Call +1(800)985-6929 To Order or Order Online At Nordgearmotors.com

50 hp, 60 hp Gearmotors



NORD DRIVESYSTEMS

Motor Power P_n [hp]	Output Speed n_2 [rpm]	Output Torque T_2 [lb-in]	Service Factor f_B	AGMA Class	Gear Ratio i_{tot}	Standard Bearings F_{RN} OHL [lb]	Standard Bearings F_{AN} Thrust [lb]	Heavy Duty Bearings (VL) F_{RVL} OHL [lb]	Heavy Duty Bearings (VL) F_{AVL} Thrust [lb]	Model Type	Weight [lb]	Dim. Page
50	50	63587	2.6	III	35.61	7650	13826	16774	21983	**SK 9382 - 225S/4**	1962	362
	42	74872	2.4	III	41.93	7702	14533	17336	22662	**SK 9382 - 225SH/4**		
	36	86496	2.3	III	48.44	7697	15149	17825	23213			
	32	99085	2.1	III	55.49	7634	15644	18315	23702			
	27	116513	1.8	II	65.25	7466	16259	18779	24239			
	24	128905	1.6	II	72.19	7304	16628	19087	24593			
	21	148548	1.4	II	83.19	6975	17114	19393	24869			
	17	180153	1.2	I	100.89	6667	17987	19996	25475			
	15	206367	1.1	I	115.57	6055	18245	20158	25598			
	13	242669	0.9	*	135.9	5132	18542	20360	25598			
	27	116852	2.7	III	65.44			30017	27506	**SK 10382 - 225S/4**	3206	366
	24	129834	2.5	III	72.71			29792	28130	**SK 10382 - 225SH/4**		
	19	163118	1.9	II	91.35			29104	29563			
	17	186975	1.7	II	104.71			28499	30377			
	13	250722	1.3	I	140.41			26377	32132			
	16	200670	3.0	III	112.38			31597	28971	**SK 11382 - 225S/4**	5054	370
	14	233437	2.6	III	130.73			30688	29966	**SK 11382 - 225SH/4**		
	12	272971	2.2	III	152.87			29358	30893			
	10	307059	2.0	III	171.96			27986	31543			
	7.9	401341	1.5	II	224.76			22741	32990			
	17	180136	3.1	III	100.88			32085	26912	**SK 12382 - 225S/4**	5054	372
	15	209545	2.9	III	117.35			31367	27657	**SK 12382 - 225SH/4**		
	13	245026	2.8	III	137.22			30326	28375			
	11	275614	2.6	III	154.35			29259	28834			
	8.7	360253	1.7	II	201.75			25333	29727			
60	403	9379	1.9	II	4.39	2466	3713	5870	8474	**SK 6282 - 225M/4**	939	348
	363	10425	1.8	II	4.88	2491	3827	6005	8651	**SK 6282 - 225MH/4**		
	322	11750	1.7	II	5.50	2511	3965	6152	8861			
	306	12348	1.7	II	5.78	2518	4030	6217	8946			
	295	12797	1.7	II	5.99	2516	4068	6262	9020			
	263	14399	1.8	II	6.74	2518	4194	6397	9209			
	226	16706	1.4	II	7.82	2511	4352	6568	9479			
	166	22731	1.7	II	10.64	2563	4793	7016	10107			
	143	26384	1.5	II	12.35	2480	4939	7155	10303			
	415	9101	3.5	III	4.26	2808	4061	7085	10343	**SK 7282 - 225M/4**	1078	352
	351	10767	3.2	III	5.04	2887	4295	7371	10766	**SK 7282 - 225MH/4**		
	334	11323	3.2	III	5.30	2900	4365	7452	10888			
	296	12775	3.0	III	5.98	2943	4543	7664	11189			
	278	13587	2.9	III	6.36	2968	4633	7760	11351			
	236	16001	2.5	III	7.49	2997	4876	8039	11741			
	204	18501	2.0	III	8.66	3013	5076	8276	12105			
	187	20252	2.7	III	9.48	3132	5292	8532	12479			
	178	21192	1.8	II	9.92	3004	5240	8512	12418			
	159	23842	2.3	III	11.16	3128	5517	8798	12866			
	137	27537	1.9	II	12.89	3094	5733	9020	13176			
	109	34801	1.6	II	16.29	3026	6055	9407	13739			
	89	42663	1.2	I	19.97	2948	6363	9745	14254			
	77	48858	1.1	I	22.87	2786	6496	9909	14461			
	75	50118	1.2	I	23.46	2502	6352	9709	14254	**SK 7382 - 225M/4**	1094	354
	66	57425	1.0	I	26.88	2221	6415	9774	14393	**SK 7382 - 225MH/4**		
	58	64987	0.9	*	30.42	1908	6424	9799	14438			

(AGMA Class I = f_B 1.0 - 1.39 II = f_B 1.4 - 1.99 III = f_B ≥ 2.0 * = f_B < 1.0) **(Model Type in blue is an Energy Efficient motor)**

Send Quote Requests to info@automatedpt.com
Call +1(800)985-6929 To Order or Order Online At Nordgearmotors.com

DRIVESYSTEMS



60 hp, 75 hp Gearmotors

Motor Power P_n [hp]	Output Speed n_2 [rpm]	Output Torque T_2 [lb-in]	Service Factor f_B	AGMA Class	Gear Ratio i_{tot}	Standard Bearings F_{RN} OHL [lb]	Standard Bearings F_{AN} Thrust [lb]	Heavy Duty Bearings (VL) F_{RVL} OHL [lb]	Heavy Duty Bearings (VL) F_{AVL} Thrust [lb]	Model Type	Weight [lb]	Dim. Page
60	183	20658	2.8	III	9.67	4097	6356	10042	14490	**SK 8282 - 225M/4**	1360	356
	163	23201	3.9	III	10.86	4262	6671	10397	14985	SK 8282 - 225MH/4		
	137	27687	3.3	III	12.96	4304	7043	10809	15550			
	117	32430	2.6	III	15.18	4334	7367	11126	16056			
	102	37172	2.3	III	17.40	4325	7668	11394	16472			
	84	45141	2.1	III	21.13	4329	8087	11837	17091			
	72	52340	1.8	II	24.50	4248	8404	12098	17507			
	57	66055	1.6	II	30.92	3843	8663	12344	17876	**SK 8382 - 225M/4**	1369	358
	49	76652	1.4	II	35.88	3524	8845	12497	18108	SK 8382 - 225MH/4		
	41	93123	1.0	I	43.59	3161	9133	12699	18488			
	37	102117	1.0	I	47.80	2628	9045	12548	18311			
	76	49456	2.9	III	23.15	5668	9232	12843	16792	**SK 9282 - 225M/4**	2024	360
	66	57446	2.6	III	26.89	5690	9686	13223	17282	SK 9282 - 225MH/4		
	57	65778	2.4	III	30.79	5702	10017	13613	17703			
	51	73447	2.0	III	34.38	5684	10312	13878	18047			
	50	76075	2.8	III	35.61	7027	13264	16335	21323	**SK 9382 - 225M/4**	2035	362
	42	89577	2.4	III	41.93	6982	13826	16839	21841	SK 9382 - 225MH/4		
	37	103484	2.1	III	48.44	6849	14301	17237	22300			
	32	118545	1.8	II	55.49	6653	14742	17597	22662			
	25	154222	1.4	II	72.19	6005	15469	18142	23175			
	21	177722	1.2	I	83.19	5456	15770	18362	23364			
	18	215535	1.0	I	100.89	4824	16310	18788	23663			
	15	246896	0.9	*	115.57	3949	16416	18756	23510			
	31	121258	2.6	III	56.76			29943	26044	**SK 10382 - 225M/4**	3279	366
	27	139802	2.2	III	65.44			29606	26892	SK 10382 - 225MH/4		
	24	155333	2.1	III	72.71			29279	27506			
	19	195154	1.6	II	91.35			28269	28766			
	17	223696	1.4	II	104.71			27371	29563			
	23	164519	3.3	III	77.01			32418	26064	**SK 11382 - 225M/4**	5127	370
	19	196692	2.9	III	92.07			31696	27131	SK 11382 - 225MH/4		
	16	240081	2.5	III	112.38			30483	28240			
	14	279283	2.2	III	130.73			29122	29068			
	12	326582	1.9	II	152.87			27090	29966			
	10	367364	1.7	II	171.96			24923	30497			
	15	250699	3.2	III	117.35			30139	26613	**SK 12382 - 225M/4**	5127	372
	13	293148	2.7	III	137.22			28573	27131	SK 12382 - 225MH/4		
	11	329743	2.4	III	154.35			26937	27479			
75	394	11990	3.6	III	4.52	3440	4763	8244	11898	**SK 8282 - 250M/4**	1766	356
	258	18356	3.3	III	6.92	3665	5486	9081	13097	SK 8282 - 250MH/4		
	216	21911	2.9	III	8.26	3715	5774	9430	13613			
	184	25651	2.2	III	9.67	3737	6039	9729	14033			
	164	28808	3.2	III	10.86	3877	6336	10069	14513			
	138	34379	2.6	III	12.96	3861	6660	10393	15035			
	117	40268	2.1	III	15.18	3807	6932	10674	15399			
	102	46157	1.9	II	17.40	3713	7146	10886	15725			
	84	56051	1.7	II	21.13	3602	7463	11232	16236			
	73	64990	1.4	II	24.50	3375	7668	11401	16499			

(AGMA Class I = f_B 1.0 - 1.39 II = f_B 1.4 - 1.99 III = f_B ≥ 2.0 * = f_B < 1.0) **(Model Type in blue is an Energy Efficient motor)**

Send Quote Requests to info@automatedpt.com
Call +1(800)985-6929 To Order or Order Online At Nordgearmotors.com

75 hp Gearmotors



DRIVESYSTEMS

GEARMOTORS

Motor Power P_n [hp]	Output Speed n_2 [rpm]	Output Torque T_2 [lb-in]	Service Factor f_B	AGMA Class	Gear Ratio i_{tot}	Standard Bearings F_{RN} OHL [lb]	Standard Bearings F_{AN} Thrust [lb]	Heavy Duty Bearings (VL) F_{RVL} OHL [lb]	Heavy Duty Bearings (VL) F_{AVL} Thrust [lb]	Model Type	Weight [lb]	Dim. Page
75	308	15332	3.7	III	5.78	4165	5499	8910	11840	**SK 9282 - 250M/4** SK 9282 - 250MH/4	2430	360
	252	18728	3.6	III	7.06	4334	5902	9376	12402			
	206	22919	3.4	III	8.64	4493	6334	9853	13012			
	175	27004	3.2	III	10.18	4601	6687	10251	13502			
	148	31859	3.6	III	12.01	4815	7144	10737	14121			
	121	38994	3.3	III	14.70	4919	7603	11239	14747			
	103	45971	3.0	III	17.33	4973	7992	11633	15253			
	89	53398	2.6	III	20.13	4970	8318	11999	15647			
	77	61409	2.4	III	23.15	5078	8755	12434	16209			
	66	71330	2.1	III	26.89	5036	9056	12753	16551			
	58	81676	1.9	II	30.79	4916	9335	13055	16900			
	52	91199	1.6	II	34.38	4793	9594	13277	17118			
	50	94462	2.2	III	35.61	6104	12380	15671	20288	**SK 9382 - 250M/4** SK 9382 - 250MH/4	2441	362
	42	111227	1.9	II	41.93	5861	12866	16049	20682			
	37	128496	1.7	II	48.44	5553	13156	16340	20950			
	32	147197	1.4	II	55.49	5191	13412	16585	21119			
	25	191496	1.1	I	72.19	3992	13739	16785	21186			
	21	220676	1.0	I	83.19	3123	13826	16785	21015			
	18	267628	0.8	*	100.89	2007	13961	16938	20984			
	85	55706	3.5	III	21.00			30742	20023	**SK 10382 - 250M/4** SK 10382 - 250MH/4	3685	366
	76	62550	3.4	III	23.58			30686	20642			
	66	72100	3.3	III	27.18			30598	21384			
	60	79023	3.4	III	29.79			30528	21904			
	52	91119	3.3	III	34.35			30386	22691			
	43	108760	2.8	III	41.00			30143	23621			
	37	127196	2.4	III	47.95			29842	24428			
	31	150566	2.1	III	56.76			29383	25387			
	27	173591	1.8	II	65.44			28850	26044			
	25	192876	1.7	II	72.71			28334	26593			
	20	242322	1.3	I	91.35			26703	27637			
	17	277761	1.1	I	104.71			25223	28217			
	56	84779	3.9	III	31.96			33617	20691	**SK 11382 - 250M/4** SK 11382 - 250MH/4	5532	370
	47	101359	3.7	III	38.21			33435	21643			
	38	123721	3.5	III	46.64			33134	22671			
	33	143934	3.3	III	54.26			32805	23486			
	28	168286	3.1	III	63.44			32342	24327			
	23	204282	2.7	III	77.01			31505	25322			
	19	244232	2.4	III	92.07			30350	26276			
	16	298107	2.0	III	112.38			28368	27173			
	14	346784	1.8	II	130.73			26071	27925			
	12	405514	1.5	II	152.87			22444	28467			
	10	456154	1.3	I	171.96			18162	28879			
	26	183353	3.9	III	69.12			32013	23409	**SK 12382 - 250M/4** SK 12382 - 250MH/4	5532	372
	22	219243	3.6	III	82.65			31102	24057			
	18	267602	3.0	III	100.88			29556	24721			
	15	311291	2.6	III	117.35			27799	25040			
	13	364000	2.2	III	137.22			25119	25322			
	12	409440	1.9	II	154.35			22158	25486			

(AGMA Class I = f_B 1.0 - 1.39 II = f_B 1.4 - 1.99 III = f_B ≥ 2.0 * = f_B < 1.0) **(Model Type in blue is an Energy Efficient motor)**

Send Quote Requests to info@automatedpt.com
Call +1(800)985-6929 To Order or Order Online At Nordgearmotors.com

DRIVESYSTEMS



100 hp Gearmotors

Motor Power P_n [hp]	Output Speed n_2 [rpm]	Output Torque T_2 [lb-in]	Service Factor f_B	AGMA Class	Gear Ratio i_{tot}	Standard Bearings F_{RN} OHL [lb]	Standard Bearings F_{AN} Thrust [lb]	Heavy Duty Bearings (VL) F_{RVL} OHL [lb]	Heavy Duty Bearings (VL) F_{AVL} Thrust [lb]	Model Type	Weight [lb]	Dim. Page
100	396	15932	2.7	III	4.52	3182	4525	7992	11540	**SK 8282 - 280S/4**	2152	356
	258	24392	2.5	III	6.92	3238	5119	8741	12582	SK 8282 - 280SH/4		
	216	29115	2.2	III	8.26	3206	5346	9000	12994			
	185	34086	1.7	II	9.67	3150	5546	9232	13331			
	165	38280	2.4	III	10.86	3242	5830	9533	13766			
	138	45682	2.0	III	12.96	3101	6010	9763	14146			
	118	53508	1.6	II	15.18	2909	6197	9911	14373			
	103	61333	1.4	II	17.40	2684	6266	10022	14585			
	85	74481	1.3	I	21.13	2351	6460	10213	14868			
	73	86359	1.1	I	24.50	1913	6460	10184	14868			
	309	20374	2.8	III	5.78	3917	5283	8723	11520	**SK 9282 - 280S/4**	2816	360
	253	24886	2.7	III	7.06	4016	5652	9151	12049	SK 9282 - 280SH/4		
	207	30455	2.5	III	8.64	4118	6008	9583	12582			
	176	35883	2.4	III	10.18	4151	6323	9920	12992			
	149	42334	2.7	III	12.01	4316	6721	10386	13568			
	122	51816	2.5	III	14.70	4304	7074	10798	14076			
	103	61086	2.2	III	17.33	4217	7364	11115	14418			
	89	70956	2.0	III	20.13	4109	7592	11399	14722			
	77	81601	1.8	II	23.15	4129	7916	11763	15129			
	66	94784	1.6	II	26.89	3902	8147	11990	15372			
	58	108531	1.5	II	30.79	3600	8251	12173	15523			
	52	121185	1.2	I	34.38	3326	8332	12258	15597			
	50	125521	1.7	II	35.61	4541	11048	14598	18635	**SK 9382 - 280S/4**	2827	362
	43	147798	1.4	II	41.93	3989	11207	14771	18725	SK 9382 - 280SH/4		
	37	170745	1.2	I	48.44	3346	11279	14843	18695			
	32	195595	1.1	I	55.49	2567	11279	14823	18576			
	25	254460	0.8	*	72.19	493	10942	14558	17845			
	85	74022	2.7	III	21.00			30580	19580	**SK 10382 - 280S/4**	4070	366
	76	83116	2.6	III	23.58			30481	20120	SK 10382 - 280SH/4		
	66	95806	2.5	III	27.18			30326	20777			
	60	105006	2.6	III	29.79			30200	21281			
	52	121079	2.5	III	34.35			29948	21938			
	44	144520	2.1	III	41.00			29511	22763			
	37	169018	1.8	II	47.95			28962	23468			
	32	200072	1.5	II	56.76			28125	24156			
	27	230668	1.3	I	65.44			27131	24703			
	25	256293	1.3	I	72.71			26152	25103			
	20	321997	1.0	I	91.35			22923	25794			
	17	369089	0.8	*	104.71			19742	26084			
	56	112655	2.9	III	31.96			33289	20201	**SK 11382 - 280S/4**	5918	370
	47	134685	2.8	III	38.21			32963	21026	SK 11382 - 280SH/4		
	38	164400	2.6	III	46.64			32420	21956			
	33	191260	2.5	III	54.26			31829	22635			
	28	223618	2.4	III	63.44			30976	23335			
	23	271450	2.0	III	77.01			29414	24212			
	19	324535	1.8	II	92.07			27189	24840			
	16	396125	1.5	II	112.38			23101	25486			
	14	460806	1.3	I	130.73			17687	25855			
	12	538847	1.1	I	152.87			1458	26147			
	10	606137	1.0	I	171.96				26276			

(AGMA Class I = f_B 1.0 - 1.39 II = f_B 1.4 - 1.99 III = f_B ≥ 2.0 * = f_B < 1.0) **(Model Type in blue is an Energy Efficient motor)**

Send Quote Requests to info@automatedpt.com
Call +1(800)985-6929 To Order or Order Online At Nordgearmotors.com

100 hp, 125 hp Gearmotors



DRIVESYSTEMS

Motor Power P_n [hp]	Output Speed n_2 [rpm]	Output Torque T_2 [lb-in]	Service Factor f_B	AGMA Class	Gear Ratio i_{tot}	Standard Bearings F_{RN} OHL [lb]	Standard Bearings F_{AN} Thrust [lb]	Heavy Duty Bearings (VL) F_{RVL} OHL [lb]	Heavy Duty Bearings (VL) F_{AVL} Thrust [lb]	Model Type	Weight [lb]	Dim. Page
100	26	243639	2.9	III	69.12			30368	21886	**SK 12382 - 280S/4**	5918	372
	22	291331	2.7	III	82.65			28647	22311	SK 12382 - 280SH/4		
	18	355589	2.2	III	100.88			25594	22489			
	15	413644	1.9	II	117.35			21843	22563			
	13	483683	1.6	II	137.22			15059	22347			
	12	544064	1.5	II	154.35				22097			
125	334	23555	3.1	III	5.34	3618	4955	8406	11050	**SK 9282 - 280M/4**	2926	360
	309	25495	3.1	III	5.78	3647	5076	8541	11248	SK 9282 - 280MH/4		
	253	31141	2.9	III	7.06	3697	5378	8928	11725			
	207	38110	2.6	III	8.64	3710	5688	9302	12146			
	175	44903	2.1	III	10.18	3668	5920	9599	12481			
	149	52975	2.3	III	12.01	3785	6282	10026	13012			
	121	64840	2.0	III	14.70	3645	6581	10366	13372			
	103	76441	1.8	II	17.33	3447	6732	10593	13655			
	89	88792	1.6	II	20.13	3193	6863	10784	13786			
	77	102112	1.4	II	23.15	3105	7144	11077	14121			
	66	118609	1.3	I	26.89	2693	7211	11198	14213			
	58	135812	1.2	I	30.79	2234	7211	11250	14213			
	343	22937	3.3	III	5.20			29320	13433	**SK 10282 - 280M/4**	4126	364
	308	25583	3.2	III	5.80			30170	13826	SK 10282 - 280MH/4		
	265	29729	3.1	III	6.74			30890	14391			
	236	33435	3.0	III	7.58			30875	14837			
	217	36346	3.3	III	8.24			30861	15271			
	194	40580	3.2	III	9.20			30841	15692			
	171	45962	3.3	III	10.42			30809	16232			
	154	51299	3.2	III	11.63			30773	16677			
	132	59547	3.1	III	13.50			30710	17305			
	118	67002	3.0	III	15.19			30647	17813			
	98	80455	2.8	III	18.24			30512	18599			
	85	92629	2.9	III	21.00			30368	19145	**SK 10382 - 280M/4**	4181	366
	76	104009	2.7	III	23.58			30213	19674	SK 10382 - 280MH/4		
	66	119888	2.4	III	27.18			29968	20284			
	60	131401	2.4	III	29.79			29765	20709			
	52	151515	2.0	III	34.35			29363	21247			
	44	180847	1.7	II	41.00			28663	21938			
	37	211503	1.5	II	47.95			27774	22473			
	31	250363	1.2	I	56.76			26393	23020			
	27	288650	1.1	I	65.44			24707	23393			
	25	320717	1.0	I	72.71			22997	23621			
	20	402936	0.8	*	91.35			16756	23924			
	233	33832	3.6	III	7.67			33379	13748	**SK 11282 - 280M/4**	5859	368
	208	37846	3.5	III	8.58			33957	14173	SK 11282 - 280MH/4		
	178	44330	3.4	III	10.05			33926	14753			
	149	52754	3.2	III	11.96			33878	15428			
	127	61929	3.1	III	14.04			33815	16061			
	109	72030	3.6	III	16.33			33737	16853			
	98	80587	3.5	III	18.27			33658	17318			
	83	94482	3.4	III	21.42			33514	18027			
	70	112346	3.2	III	25.47			33293	18731			
	60	131974	2.8	III	29.92			33005	19436			
	51	153720	2.4	III	34.85			32630	20070			

(AGMA Class I = f_B 1.0 - 1.39 II = f_B 1.4 - 1.99 III = f_B ≥ 2.0 * = f_B < 1.0) **(Model Type in blue is an Energy Efficient motor)**

Send Quote Requests to info@automatedpt.com
Call +1(800)985-6929 To Order or Order Online At Nordgearmotors.com

DRIVESYSTEMS

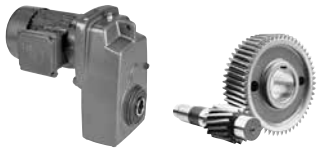

125 hp, 150 hp Gearmotors

Motor Power P_n [hp]	Output Speed n_2 [rpm]	Output Torque T_2 [lb-in]	Service Factor f_B	AGMA Class	Gear Ratio i_{tot}	Standard Bearings F_{RN} OHL [lb]	Standard Bearings F_{AN} Thrust [lb]	Heavy Duty Bearings (VL) F_{RVL} OHL [lb]	Heavy Duty Bearings (VL) F_{AVL} Thrust [lb]	Model Type	Weight [lb]	Dim. Page
125	56	140973	3.4	III	31.96			32857	19753	**SK 11382 - 280M/4**	6028	370
	47	168541	3.2	III	38.21			32335	20459	**SK 11382 - 280MH/4**		
	38	205725	2.6	III	46.64			31466	21263			
	33	239336	2.2	III	54.26			30506	21886			
	28	279828	1.9	II	63.44			29099	22381			
	23	339684	1.6	II	77.01			26440	23002			
	19	406112	1.4	II	92.07			22401	23486			
	16	495697	1.2	I	112.38			13415	23787			
	14	576638	1.1	I	130.73				23981			
	12	674295	0.9	*	152.87				23864			
	10	758499	0.8	*	171.96				23713			
	26	304882	2.6	III	69.12			28080	20394	**SK 12382 - 280M/4**	6028	372
	22	364561	2.2	III	82.65			25085	20459	**SK 12382 - 280MH/4**		
	18	444972	1.8	II	100.88			19235	20363			
	15	517620	1.5	II	117.35			9563	19973			
	13	605264	1.3	I	137.22				19375			
	12	680823	1.2	I	154.35				18794			
150	335	28234	2.6	III	5.34	3375	4761	8231	10805	**SK 9282 - 315S/4**	3301	360
	309	30562	2.6	III	5.78	3391	4860	8361	10944	**SK 9282 - 315SH/4**		
	253	37330	2.4	III	7.06	3386	5117	8696	11374			
	207	45684	2.2	III	8.64	3314	5378	9029	11725			
	176	53827	1.8	II	10.18	3188	5544	9268	11990			
	149	63503	1.9	II	12.01	3260	5864	9664	12463			
	122	77727	1.7	II	14.70	2993	6026	9918	12704			
	103	91633	1.5	II	17.33	2655	6134	10076	12848			
	89	106438	1.3	I	20.13	2261	6143	10163	12868			
	77	122407	1.2	I	23.15	2061	6323	10404	13118			
	66	142182	1.1	I	26.89	1451	6262	10424	13012			
	58	162803	1.0	I	30.79	772	6134	10325	12848			
	344	27495	2.8	III	5.20			29075	13304	**SK 10282 - 315S/4**	4500	364
	308	30668	2.7	III	5.80			29815	13694	**SK 10282 - 315SH/4**		
	265	35638	2.6	III	6.74			30866	14231			
	236	40080	2.5	III	7.58			30843	14672			
	217	43569	2.8	III	8.24			30823	15075			
	194	48645	2.7	III	9.20			30791	15494			
	172	55096	2.8	III	10.42			30746	16022			
	154	61494	2.7	III	11.63			30695	16441			
	132	71382	2.6	III	13.50			30605	17028			
	118	80318	2.5	III	15.19			30512	17501			
	98	96445	2.4	III	18.24			30317	18216			
	85	111038	2.4	III	21.00			30110	18720	**SK 10382 - 315S/4**	4556	366
	76	124680	2.3	III	23.58			29885	19145	**SK 10382 - 315SH/4**		
	66	143715	2.0	III	27.18			29527	19674			
	60	157516	2.0	III	29.79			29232	20088			
	52	181627	1.7	II	34.35			28643	20545			
	44	216789	1.4	II	41.00			27603	21146			
	37	253538	1.2	I	47.95			26264	21557			
	32	300121	1.0	I	56.76			24129	21870			
	27	346017	0.9	*	65.44			21413	22082			
	25	384457	0.9	*	72.71			18479	22151			

(AGMA Class I = f_B 1.0 - 1.39 II = f_B 1.4 - 1.99 III = f_B ≥ 2.0 * = f_B < 1.0) **(Model Type in blue is an Energy Efficient motor)**

Send Quote Requests to info@automatedpt.com
Call +1(800)985-6929 To Order or Order Online At Nordgearmotors.com

150 hp, 175 hp Gearmotors



DRIVESYSTEMS

GEARMOTORS

Motor Power P_n [hp]	Output Speed n_2 [rpm]	Output Torque T_2 [lb-in]	Service Factor f_B	AGMA Class	Gear Ratio i_{tot}	Standard Bearings F_{RN} OHL [lb]	Standard Bearings F_{AN} Thrust [lb]	Heavy Duty Bearings (VL) F_{RVL} OHL [lb]	Heavy Duty Bearings (VL) F_{AVL} Thrust [lb]	Model Type	Weight [lb]	Dim. Page
150	233	40555	3.0	III	7.67			32978	13617	**SK 11282 - 315S/4**	6234	368
	208	45367	3.0	III	8.58			33921	14015	SK 11282 - 315SH/4		
	178	53140	2.8	III	10.05			33876	14589			
	149	63239	2.7	III	11.96			33806	15233			
	127	74237	2.5	III	14.04			33716	15831			
	109	86346	3.0	III	16.33			33602	16639			
	98	96603	3.0	III	18.27			33489	17042			
	83	113259	2.8	III	21.42			33282	17683			
	70	134674	2.7	III	25.47			32963	18347			
	60	158203	2.3	III	29.92			32544	18977			
	51	184271	2.0	III	34.85			31993	19562			
	56	168990	2.8	III	31.96			32326	19220	**SK 11382 - 315S/4**	6403	370
	47	202037	2.6	III	38.21			31563	19877	SK 11382 - 315SH/4		
	38	246611	2.2	III	46.64			30274	20592			
	33	286902	1.9	II	54.26			28825	21026			
	28	335442	1.6	II	63.44			26656	21434			
	23	407194	1.4	II	77.01			22322	21886			
	19	486824	1.2	I	92.07			14652	22097			
	16	594214	1.0	I	112.38				22097			
	14	691241	0.9	*	130.73				21920			
	12	808307	0.8	*	152.87				21537			
	26	365475	2.2	III	69.12			25034	18884	**SK 12382 - 315S/4**	6403	372
	22	437015	1.8	II	82.65			19949	18673	SK 12382 - 315SH/4		
	18	533407	1.5	II	100.88			5036	18113			
	15	620493	1.3	I	117.35				17487			
	13	725557	1.1	I	137.22				16452			
	12	816132	1.0	I	154.35				15480			
175	335	32903	2.2	III	5.34	3128	4568	8071	10514	**SK 9282 - 315M/4**	3477	360
	310	35615	2.2	III	5.78	3125	4662	8172	10649	SK 9282 - 315MH/4		
	254	43502	2.1	III	7.06	3056	4860	8471	10996			
	207	53238	1.9	II	8.64	2896	5060	8750	11300			
	176	62727	1.5	II	10.18	2716	5159	8948	11484			
	149	74003	1.7	II	12.01	2734	5438	9293	11914			
	122	90578	1.4	II	14.70	2304	5544	9484	12029			
	103	106783	1.3	I	17.33	1845	5508	9545	12029			
	89	124036	1.1	I	20.13	1303	5429	9536	11954			
	77	142645	1.0	I	23.15	1006	5544	9711	12107			
	67	165689	0.9	*	26.89	189	5317	9608	11840			
	344	32041	3.2	III	5.20			28683	13199	**SK 10282 - 315M/4**	4677	364
	309	35738	3.0	III	5.80			29462	13563	SK 10282 - 315MH/4		
	266	41530	2.9	III	6.74			30539	14074			
	236	46706	2.8	III	7.58			30803	14508			
	217	50773	3.2	III	8.24			30778	14909			
	195	56688	3.0	III	9.20			30733	15296			
	172	64205	3.2	III	10.42			30672	15793			
	154	71661	3.0	III	11.63			30602	16232			
	133	83184	2.9	III	13.50			30481	16760			
	118	93597	2.8	III	15.19			30355	17195			
	98	112390	2.5	III	18.24			30087	17870			

(AGMA Class I = f_B 1.0 - 1.39 II = f_B 1.4 - 1.99 III = f_B ≥ 2.0 * = f_B < 1.0) **(Model Type in blue is an Energy Efficient motor)**

Send Quote Requests to info@automatedpt.com
Call +1(800)985-6929 To Order or Order Online At Nordgearmotors.com

DRIVESYSTEMS



175 hp, 200 hp Gearmotors

Motor Power P_n [hp]	Output Speed n_2 [rpm]	Output Torque T_2 [lb-in]	Service Factor f_B	AGMA Class	Gear Ratio i_{tot}	Standard Bearings F_{RN} OHL [lb]	Standard Bearings F_{AN} Thrust [lb]	Heavy Duty Bearings (VL) F_{RVL} OHL [lb]	Heavy Duty Bearings (VL) F_{AVL} Thrust [lb]	Model Type	Weight [lb]	Dim. Page
175	85	129397	1.8	II	21.00			29801	18275	**SK 10382 - 315M/4**	4732	366
	76	145294	2.0	III	23.58			29493	18659	SK 10382 - 315MH/4		
	66	167476	1.7	II	27.18			29000	19085			
	60	183559	1.7	II	29.79			28591	19485			
	52	211656	1.5	II	34.35			27770	19897			
	44	252632	1.2	I	41.00			26300	20284			
	37	295456	1.0	I	47.95			24370	20545			
	32	349741	0.9	*	56.76			21161	20709			
	27	403225	0.8	*	65.44			16727	20743			
	233	47261	3.4	III	7.67			32578	13487	**SK 11282 - 315M/4**	6410	368
	209	52868	3.3	III	8.58			33552	13858	SK 11282 - 315MH/4		
	178	61926	3.1	III	10.05			33815	14425			
	150	73695	2.9	III	11.96			33721	15017			
	127	86511	2.7	III	14.04			33599	15579			
	110	100621	3.4	III	16.33			33444	16346			
	98	112575	3.3	III	18.27			33291	16799			
	84	131985	2.8	III	21.42			33005	17345			
	70	156940	2.4	III	25.47			32567	17969			
	60	184360	2.0	III	29.92			31991	18524			
	56	196930	2.7	III	31.96			31691	18731	**SK 11382 - 315M/4**	6580	370
	47	235440	2.3	III	38.21			30625	19280	SK 11382 - 315MH/4		
	38	287384	1.8	II	46.64			28805	19845			
	33	334337	1.6	II	54.26			26710	20201			
	28	390901	1.4	II	63.44			23454	20459			
	23	474516	1.2	I	77.01			16180	20657			
	19	567312	1.0	I	92.07				20657			
	16	692458	0.9	*	112.38				20394			
	14	805526	0.8	*	130.73				19973			
	26	425900	1.9	II	69.12			20885	17372	**SK 12382 - 315M/4**	6580	372
	22	509269	1.6	II	82.65			11207	16880	SK 12382 - 315MH/4		
	18	621597	1.3	I	100.88				15959			
	15	723081	1.1	I	117.35				14873			
	13	845515	0.9	*	137.22				13444			
200	335	37604	2.0	III	5.34	2885	4388	7900	10265	**SK 9282 - 315MA/4**	3808	360
	310	40702	1.9	II	5.78	2851	4444	7985	10379	SK 9282 - 315MH/4		
	254	49716	1.8	II	7.06	2709	4617	8249	10649			
	207	60842	1.6	II	8.64	2480	4730	8476	10874			
	176	71686	1.3	I	10.18	2212	4806	8611	10978			
	149	84573	1.4	II	12.01	2174	5027	8937	11374			
	122	103515	1.3	I	14.70	1620	5004	9005	11374			
	103	122036	1.1	I	17.33	992	4907	9023	11248			
	89	141753	1.0	I	20.13	297	4723	8894	11032			
	77	163019	0.9	*	23.15			8993	11086			
	67	189356	0.8	*	26.89			8739	10701			
	344	36618	2.8	III	5.20			28343	13070	**SK 10282 - 315MA/4**	5008	364
	309	40843	2.7	III	5.80			29061	13433	SK 10282 - 315MH/4		
	266	47462	2.6	III	6.74			30065	13939			
	236	53377	2.4	III	7.58			30758	14321			
	217	58025	2.8	III	8.24			30724	14742			
	195	64785	2.7	III	9.20			30668	15125			
	172	73376	2.8	III	10.42			30587	15593			
	154	81897	2.7	III	11.63			30497	15973			
	133	95065	2.6	III	13.5			30337	16493			
	118	106966	2.4	III	15.19			30170	16895			
	98	128444	2.2	III	18.24			29819	17501			

(AGMA Class I = f_B 1.0 - 1.39 II = f_B 1.4 - 1.99 III = f_B ≥ 2.0 * = f_B < 1.0) **(Model Type in blue is an Energy Efficient motor)**

Send Quote Requests to info@automatedpt.com
Call +1(800)985-6929 To Order or Order Online At Nordgearmotors.com

200 hp Gearmotors



DRIVESYSTEMS

GEARMOTORS

Motor Power P_n [hp]	Output Speed n_2 [rpm]	Output Torque T_2 [lb-in]	Service Factor f_B	AGMA Class	Gear Ratio i_{tot}	Standard Bearings F_{RN} OHL [lb]	Standard Bearings F_{AN} Thrust [lb]	Heavy Duty Bearings (VL) F_{RVL} OHL [lb]	Heavy Duty Bearings (VL) F_{AVL} Thrust [lb]	Model Type	Weight [lb]	Dim. Page
200	85	147879	1.6	II	21.00			29441	17840	**SK 10382 - 315MA/4**	5063	366
	76	166047	1.8	II	23.58			29034	18158	**SK 10382 - 315MH/4**		
	66	191398	1.5	II	27.18			28375	18540			
	60	209777	1.5	II	29.79			27828	18900			
	52	241888	1.3	I	34.35			26719	19175			
	44	288717	1.1	I	41.00			24703	19485			
	37	337657	0.9	*	47.95			21965	19580			
	32	399696	0.8	*	56.76			17078	19580			
	233	54011	3.0	III	7.67			32227	13336	**SK 11282 - 315MA/4**	6741	368
	209	60419	2.9	III	8.58			33073	13705	**SK 11282 - 315MH/4**		
	178	70771	2.7	III	10.05			33746	14240			
	150	84221	2.6	III	11.96			33624	14801			
	127	98868	2.4	III	14.04			33464	15332			
	110	114994	3.0	III	16.33			33257	16139			
	98	128655	2.9	III	18.27			33057	16479			
	84	150837	2.5	III	21.42			32681	17015			
	70	179356	2.1	III	25.47			32103	17570			
	60	210693	1.8	II	29.92			31336	18056			
	56	225058	2.4	III	31.96			30935	18259	**SK 11382 - 315MA/4**	6910	370
	47	269070	2.0	III	38.21			29502	18731	**SK 11382 - 315MH/4**		
	38	328433	1.6	II	46.64			27000	19159			
	33	382092	1.4	II	54.26			24026	19375			
	28	446736	1.2	I	63.44			19071	19562			
	23	542294	1.0	I	77.01				19562			
	19	648345	0.9	*	92.07				19280			
	16	791365	0.8	*	112.38				18702			
	26	486734	1.6	II	69.12			14663	15959	**SK 12382 - 315MA/4**	6910	372
	22	582010	1.4	II	82.65				15086	**SK 12382 - 315MH/4**		
	18	710383	1.1	I	100.88				13725			
	15	826363	1.0	I	117.35				12389			
	13	966285	0.8	*	137.22				10535			

(AGMA Class I = f_B 1.0 - 1.39 II = f_B 1.4 - 1.99 III = f_B ≥ 2.0 * = f_B < 1.0) **(Model Type in blue is an Energy Efficient motor)**

Send Quote Requests to info@automatedpt.com
Call +1(800)985-6929 To Order or Order Online At Nordgearmotors.com

Send Quote Requests to info@automatedpt.com Call +1(800)985-6929 To Order or Order Online At Nordgearmotors.com

Clincher™ Shaft Mount Reducers Selection & Combinations

Selection

- SK 0182NB
- SK 0282NB
- SK 1382NB
- SK 1282/02
- SK 1282
- SK 2282
- SK 2382
- SK 2282/02
- SK 3282
- SK 3382
- SK 3282/12
- SK 4282
- SK 4382
- SK 4282/12
- SK 5282
- SK 5382
- SK 5282/12
- SK 6282
- SK 6382
- SK 6282/22
- SK 7282
- SK 7382
- SK 7382/22
- SK 7382/32
- SK 8282
- SK 8382
- SK 8382/32
- SK 8382/42
- SK 9282
- SK 9382
- SK 9382/42
- SK 9382/52
- SK 10282
- SK 10382
- SK 10382/52
- SK 11282
- SK 11382
- SK 11382/52
- SK 12382

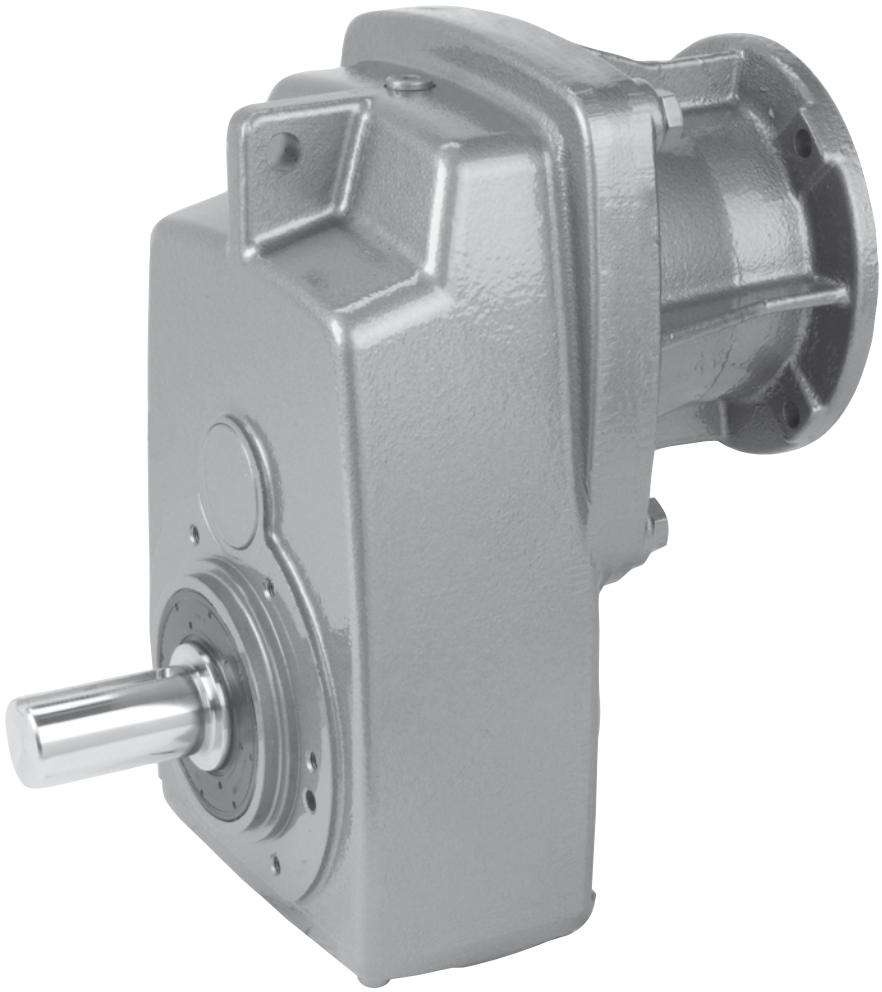

NORD® DRIVESYSTEMS

www.nord.com

UNICASE™

Model Type	Gear Ratio i_{tot}	Output Speed n_2 1750 rpm [rpm]	Output Torque* $T_{2\,max}$ [lb-in]	Maximum input power Solid input shafts type Input Speed 1750 rpm [hp]	1150 rpm [hp]	875 rpm [hp]
SK 2282	4.51	388	1646	5.00	3.30	2.50
	5.72	306	1876	5.00	3.30	2.50
	6.43	272	2000	5.00	3.30	2.50
	7.48	234	2151	5.00	3.30	2.50
	8.37	209	2266	5.00	3.30	2.50
	9.03	194	2965	5.00	3.30	2.50
	10.15	172	3151	5.00	3.30	2.50
	11.81	148	3398	5.00	3.30	2.50
	13.23	132	3584	5.00	3.30	2.50
	16.53	106	4168	5.00	3.30	2.50
	18.51	95	4301	5.00	3.30	2.50
	21.90	80	4248	5.00	3.30	2.50
	23.96	73	3850	4.46	2.94	2.23
	24.97	70	4337	4.82	3.18	2.41
	26.83	65	3885	4.01	2.64	2.00
	29.65	59	4425	4.14	2.73	2.07
	31.23	56	3938	3.50	2.31	1.75
	36.54	48	4434	3.38	2.23	1.69
	37.18	47	4071	3.04	2.00	1.52
	43.71	40	4983	3.16	2.09	1.59



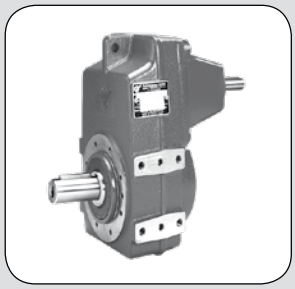

Send Quote Requests to info@automatedpt.com
Call +1(800)985-6929 To Order or Order Online At Nordgearmotors.com

SK 0182NB, SK 0282NB
NEMA-C + W
Ratings & Combinations

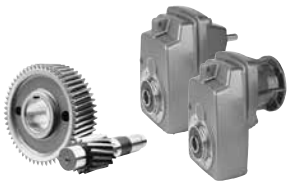

DRIVESYSTEMS

Model Type	Gear Ratio	Output Speed	Output Torque*	Maximum input power◈ Solid input shafts type "W"				NEMA C-Face* Available Combinations							
				Input Speed											
	i_{tot}	n_2 1750 rpm	$T_{2\,max}$	1750 rpm	1150 rpm	875 rpm	580 rpm								
		[rpm]	[lb-in]	[hp]	[hp]	[hp]	[hp]	56C	140TC	180TC	210TC	250TC	280TC	320TC	360TC
SK 0182NB	4.24	413	646	1.50	0.99	0.75	0.50	X	X*						
	5.34	328	814	1.50	0.99	0.75	0.50	X	X*						
	6.35	276	974	1.50	0.99	0.75	0.50	X	X*						
	7.26	241	974	1.50	0.99	0.75	0.50	X	X*						
	8.64	203	974	1.50	0.99	0.75	0.50	X	X*						
	9.49	184	974	1.50	0.99	0.75	0.50	X	X*						
	11.66	150	974	1.50	0.99	0.75	0.50	X	X*						
	13.84	126	974	1.50	0.99	0.75	0.50	X	X*						
	14.92	117	664	1.23	0.81	0.62	0.41	X	X*						
	16.53	106	885	1.49	0.98	0.74	0.49	X	X*						
	18.79	93	841	1.24	0.82	0.62	0.41	X	X*						
	22.35	78	965	1.19	0.79	0.60	0.39	X	X*						
	24.55	71	1027	1.16	0.76	0.58	0.38	X	X*						
	29.13	60	974	0.93	0.61	0.46	0.31	X*	X*						
	31.81	55	841	0.73	0.48	0.37	0.24	X*	X*						
	34.80	50	912	0.72	0.48	0.36	0.24	X*	X*						
	37.73	46	885	0.65	0.43	0.32	0.21	X*	X*						
	41.85	42	752	0.50	0.33	0.25	0.17	X*							
	49.65	35	885	0.49	0.32	0.25	0.16	X*							
	59.33	29	974	0.45	0.30	0.22	0.15	X*							
	81.71	21	575	0.19	0.13	0.10	0.06	X*							
SK 0282NB	4.03	434	912	2.00	1.32	1.00	0.66	X	X						
	4.66	376	974	2.00	1.32	1.00	0.66	X	X						
	5.17	338	1009	2.00	1.32	1.00	0.66	X	X						
	5.99	292	1071	2.00	1.32	1.00	0.66	X	X						
	6.44	272	1089	2.00	1.32	1.00	0.66	X	X						
	7.45	235	1159	2.00	1.32	1.00	0.66	X	X						
	8.80	199	1221	2.00	1.32	1.00	0.66	X	X						
	9.64	182	1248	2.00	1.32	1.00	0.66	X	X						
	10.98	159	1345	2.00	1.32	1.00	0.66	X	X						
	11.25	156	1239	2.00	1.32	1.00	0.66	X	X						
	12.98	135	1416	2.00	1.32	1.00	0.66	X	X						
	14.21	123	1443	2.00	1.32	1.00	0.66	X	X						
	16.58	106	1239	2.00	1.32	1.00	0.66	X	X						
	17.61	99	1142	1.79	1.18	0.90	0.59	X	X*						
	19.95	88	1142	1.59	1.05	0.80	0.53	X	X*						
	21.57	81	1239	1.59	1.05	0.80	0.53	X	X*						
	22.70	77	1142	1.39	0.92	0.70	0.46	X	X*						
	25.96	67	1142	1.21	0.80	0.61	0.40	X	X*						
	30.03	58	1142	1.05	0.69	0.53	0.35	X	X*						
	34.16	51	1354	1.10	0.72	0.55	0.36	X	X*						
	40.38	43	1460	1.00	0.66	0.50	0.33	X	X*						
	44.22	40	1451	0.92	0.61	0.46	0.30	X*	X*						
	51.64	34	1292	0.70	0.46	0.35	0.23	X*	X*						
	56.55	31	1416	0.70	0.46	0.35	0.23	X*	X*						
	65.99	27	1239	0.53	0.35	0.27	0.18	X*	X*						
	79.40	22	1142	0.40	0.26	0.20	0.13	X*	X*						
	85.72	20	1239	0.39	0.26	0.20	0.13	X*							
	103.12	17	1142	0.31	0.20	0.15	0.10	X*							
	139.16	13	974	0.20	0.13	0.10	0.07	X*							

* Caution - The motor power may exceed the gear unit's mechanical torque capacity
◈ The mechanical power limit of the solid input shaft type "W" may limit the reducer rating.
All ratings are mechanical. See page 14 for thermal considerations.

lb	W	56C	140TC
SK 0182NB	13	18	22
SK 0282NB	22	26	31

Send Quote Requests to info@automatedpt.com
Call +1(800)985-6929 To Order or Order Online At Nordgearmotors.com

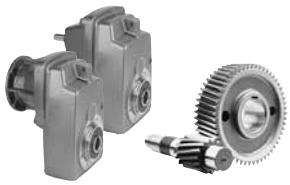

SK 1382NB , SK 1282/02
NEMA-C + W
Ratings & Combinations

Model Type	Gear Ratio	Output Speed	Output Torque*	Maximum input power◈ Solid input shafts type "W"				NEMA C-Face* Available Combinations							
				Input Speed											
	i_{tot}	n_2 1750 rpm	$T_{2\,max}$	1750 rpm	1150 rpm	875 rpm	580 rpm								
		[rpm]	[lb-in]	[hp]	[hp]	[hp]	[hp]	56C	140TC	180TC	210TC	250TC	280TC	320TC	360TC
SK 1382NB	16.28	107	2044	3.47	2.29	1.74	1.15	X	X	X*					
	18.75	93	2151	3.17	2.09	1.59	1.05	X	X	X*					
	24.26	72	2451	2.80	1.85	1.40	0.92	X	X	X*					
	26.01	67	2398	2.55	1.68	1.27	0.84	X	X	X*					
	29.79	59	2496	2.34	1.54	1.17	0.77	X	X	X*					
	35.75	49	2655	2.06	1.36	1.03	0.68	X	X	X*					
	38.77	45	2867	2.05	1.35	1.02	0.68	X	X	X*					
	44.40	39	2982	1.85	1.22	0.92	0.61	X	X*	X*					
	53.28	33	3159	1.65	1.09	0.83	0.55	X	X*	X*					
	60.00	29	3275	1.51	0.99	0.75	0.50	X	X*						
	68.23	26	3275	1.35	0.89	0.68	0.45	X	X*						
	78.99	22	3275	1.14	0.75	0.57	0.38	X	X*	X*					
	88.94	20	3275	1.04	0.69	0.52	0.34	X	X*						
	101.14	17	3275	0.88	0.58	0.44	0.29	X*	X*						
	106.08	16	3275	0.83	0.55	0.42	0.27	X*	X*						
	118.16	15	3275	0.78	0.51	0.39	0.26	X*	X*						
	136.60	13	3275	0.68	0.45	0.34	0.22	X*							
	158.12	11	3275	0.57	0.38	0.29	0.19	X*	X*						
	203.60	8.6	3275	0.45	0.29	0.22	0.15	X*							
	257.32	6.8	3275	0.35	0.23	0.18	0.12	X*							
	301.82	5.8	3275	0.30	0.20	0.15	0.10	X*							
	381.45	4.6	3275	0.24	0.16	0.12	0.08	X*							
SK 1282/02	229.08	7.6	2567	0.33	0.22	0.17	0.11	X*	X*						
	283.85	6.2	2567	0.31	0.20	0.15	0.10	X*	X*						
	328.02	5.3	2567	0.27	0.18	0.13	0.09	X*	X*						
	405.75	4.3	2567	0.23	0.15	0.11	0.08	X*	X*						
	546.50	3.2	2567	0.18	0.12	0.09	0.06	X*	X*						
	663.69	2.6	2567	0.16	0.11	0.08	0.05	X*	X*						
	826.23	2.1	2567	0.14	0.09	0.07	0.05	X*	X*						
	1066.50	1.6	2567	0.12	0.08	0.06	0.04	X*	X*						
	1362.13	1.3	2567	0.11	0.07	0.05	0.04	X*							
	1620.65	1.1	2567	0.10	0.06	0.05	0.03	X*							
	1968.10	0.89	2567	0.09	0.06	0.04	0.03	X*							
	2448.65	0.71	2567	0.08	0.05	0.04	0.03	X*							
	3608.19	0.49	2567	0.07	0.05	0.04	0.02	X*							

* Caution - The motor power may exceed the gear unit's mechanical torque capacity
◈ The mechanical power limit of the solid input shaft type "W" may limit the reducer rating.
All ratings are mechanical. See page 14 for thermal considerations.

lb	W	56C	140TC	180TC
SK 1382NB	49	53	57	68
SK 1282/02	57	62	68	–

Send Quote Requests to info@automatedpt.com
Call +1(800)985-6929 To Order or Order Online At Nordgearmotors.com

SK 1282
NEMA-C + W
Ratings & Combinations

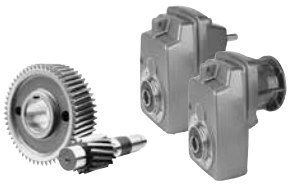

DRIVESYSTEMS

Model Type	Gear Ratio	Output Speed	Output Torque*	Maximum input power◈ Solid input shafts type "W"				NEMA C-Face* Available Combinations							
				Input Speed											
	i_{tot}	n_2 1750 rpm	$T_{2\,max}$	1750 rpm	1150 rpm	875 rpm	580 rpm								
		[rpm]	[lb-in]	[hp]	[hp]	[hp]	[hp]	56C	140TC	180TC	210TC	250TC	280TC	320TC	360TC
SK 1282	4.79	365	1133	5.00	3.30	2.50	1.65	X	X	X					
	5.47	320	1522	5.00	3.30	2.50	1.65	X	X	X					
	6.43	272	1602	5.00	3.30	2.50	1.65	X	X	X					
	7.24	242	1655	5.00	3.30	2.50	1.65	X	X	X					
	8.21	213	1416	4.79	3.16	2.39	1.58	X	X	X*					
	8.24	212	1690	5.00	3.30	2.50	1.65	X	X	X					
	9.18	191	1673	5.00	3.30	2.50	1.65	X	X	X					
	10.34	169	1735	4.65	3.07	2.33	1.53	X	X	X*					
	11.76	149	1805	4.27	2.82	2.13	1.41	X	X	X*					
	14.11	124	1859	3.66	2.41	1.83	1.21	X	X	X*					
	17.21	102	1982	3.21	2.12	1.60	1.06	X	X	X*					
	20.57	85	1991	2.69	1.77	1.34	0.89	X	X	X*					
	25.22	69	1991	2.18	1.44	1.09	0.72	X	X	X*					
	28.33	62	1991	1.96	1.29	0.98	0.65	X	X*						
	32.08	55	2036	1.78	1.17	0.89	0.59	X	X*						
	41.07	43	1920	1.31	0.86	0.66	0.43	X	X*						
	46.19	38	1735	1.05	0.69	0.52	0.35	X							
	49.25	36	2301	1.31	0.87	0.66	0.43	X	X*						
	55.39	32	2080	1.06	0.70	0.53	0.35	X							
	58.89	30	2505	1.19	0.79	0.60	0.39	X	X*						
	66.23	26	2390	0.99	0.65	0.49	0.33	X*							
	72.17	24	2620	1.00	0.66	0.50	0.33	X	X*						
	81.17	22	2620	0.91	0.60	0.46	0.30	X*							
	92.48	19	2053	0.62	0.41	0.31	0.20	X*							
	109.50	16	1850	0.47	0.31	0.23	0.15	X*							

* Caution - The motor power may exceed the gear unit's mechanical torque capacity
◈ The mechanical power limit of the solid input shaft type "W" may limit the reducer rating.
All ratings are mechanical. See page 14 for thermal considerations.

lb	W	56C	140TC	180TC
SK 1282	40	42	51	66

Send Quote Requests to info@automatedpt.com
Call +1(800)985-6929 To Order or Order Online At Nordgearmotors.com

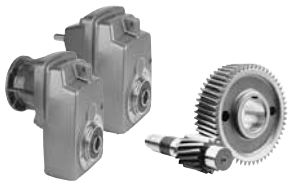

SK 2282
NEMA-C + W
Ratings & Combinations

Model Type	Gear Ratio	Output Speed	Output Torque*	Maximum input power◈ Solid input shafts type "W"				NEMA C-Face* Available Combinations							
				Input Speed											
	i_{tot}	n_2 1750 rpm	$T_{2\,max}$	1750 rpm	1150 rpm	875 rpm	580 rpm								
		[rpm]	[lb-in]	[hp]	[hp]	[hp]	[hp]	56C	140TC	180TC	210TC	250TC	280TC	320TC	360TC
SK 2282	4.51	388	1646	5.00	3.30	2.50	1.65	X	X	X	X				
	5.72	306	1876	5.00	3.30	2.50	1.65	X	X	X	X				
	6.43	272	2000	5.00	3.30	2.50	1.65	X	X	X					
	7.48	234	2151	5.00	3.30	2.50	1.65	X	X	X					
	8.37	209	2266	5.00	3.30	2.50	1.65	X	X	X					
	9.03	194	2965	5.00	3.30	2.50	1.65	X	X	X					
	10.15	172	3151	5.00	3.30	2.50	1.65	X	X	X					
	11.81	148	3398	5.00	3.30	2.50	1.65	X	X	X					
	13.23	132	3584	5.00	3.30	2.50	1.65	X	X	X					
	16.53	106	4168	5.00	3.30	2.50	1.65	X	X	X					
	18.51	95	4301	5.00	3.30	2.50	1.65	X	X	X					
	21.90	80	4248	5.00	3.30	2.50	1.65	X	X	X					
	23.96	73	3850	4.46	2.94	2.23	1.47	X	X	X*					
	24.97	70	4337	4.82	3.18	2.41	1.59	X	X	X*					
	26.83	65	3885	4.01	2.64	2.00	1.32	X	X	X*					
	29.65	59	4425	4.14	2.73	2.07	1.37	X	X	X*					
	31.23	56	3938	3.50	2.31	1.75	1.15	X	X	X*					
	36.54	48	4434	3.38	2.23	1.69	1.11	X	X	X*					
	37.18	47	4071	3.04	2.00	1.52	1.00	X	X						
	43.71	40	4983	3.16	2.09	1.58	1.04	X	X	X*					
	45.11	39	3983	2.46	1.63	1.23	0.81	X	X						
	51.71	34	4611	2.49	1.64	1.24	0.82	X	X	X*					
	53.96	32	4478	2.27	1.50	1.14	0.75	X	X						
	63.83	27	4611	1.98	1.30	0.99	0.65	X	X*						
	69.67	25	3921	1.56	1.03	0.78	0.51	X	X*						
	82.42	21	4221	1.41	0.93	0.70	0.46	X	X*						
	100.98	17	3894	1.05	0.69	0.53	0.35	X	X*						
	104.07	17	3513	0.95	0.63	0.47	0.31	X*	X*						
	127.51	14	3363	0.75	0.49	0.37	0.25	X*	X*						

* Caution - The motor power may exceed the gear unit's mechanical torque capacity
◈ The mechanical power limit of the solid input shaft type "W" may limit the reducer rating.
All ratings are mechanical. See page 14 for thermal considerations.

W + NEMA

lb	W	56C	140TC	180TC	210TC
SK 2282	77	73	82	90	90

Send Quote Requests to info@automatedpt.com
Call +1(800)985-6929 To Order or Order Online At Nordgearmotors.com

SK 2382, SK 2282/02
NEMA-C + W
Ratings & Combinations

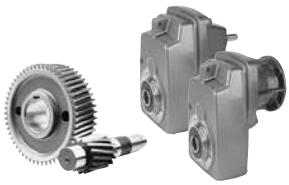

DRIVESYSTEMS

Model Type	Gear Ratio	Output Speed	Output Torque*	Maximum input power◈ Solid input shafts type "W"				NEMA C-Face* Available Combinations							
				Input Speed											
	i_{tot}	n_2 1750 rpm	$T_{2\,max}$	1750 rpm	1150 rpm	875 rpm	580 rpm								
		[rpm]	[lb-in]	[hp]	[hp]	[hp]	[hp]	56C	140TC	180TC	210TC	250TC	280TC	320TC	360TC
SK 2382	82.22	21	4965	1.50	0.99	0.75	0.50	X	X*						
	98.35	18	4983	1.42	0.94	0.71	0.47	X	X*						
	116.35	15	4611	1.10	0.72	0.55	0.36	X	X*						
	131.86	13	4611	0.95	0.63	0.48	0.31	X*	X*						
	149.96	12	4611	0.88	0.58	0.44	0.29	X*	X*						
	185.11	9.5	4611	0.70	0.46	0.35	0.23	X*	X*						
	236.11	7.4	4186	0.49	0.32	0.25	0.16	X*							
	276.27	6.3	4894	0.49	0.32	0.24	0.16	X*							
	330.45	5.3	4983	0.42	0.28	0.21	0.14	X*							
	390.93	4.5	4611	0.33	0.22	0.16	0.11	X*							
	482.56	3.6	4611	0.26	0.17	0.13	0.09	X*							
	623.10	2.8	4611	0.20	0.14	0.10	0.07	X*							
	763.41	2.3	3876	0.14	0.09	0.07	0.05	X*							
SK 2282/02	174.78	10	4602	0.50	0.33	0.25	0.17	X*	X*						
	215.75	8.1	4602	0.50	0.33	0.25	0.17	X*	X*						
	287.51	6.1	4602	0.50	0.33	0.25	0.16	X*	X*						
	356.28	4.9	4602	0.41	0.27	0.21	0.14	X*	X*						
	423.50	4.1	4602	0.35	0.23	0.18	0.12	X*	X*						
	514.51	3.4	4602	0.30	0.20	0.15	0.10	X*	X*						
	662.92	2.6	4602	0.24	0.16	0.12	0.08	X*	X*						
	824.77	2.1	4602	0.21	0.14	0.10	0.07	X*	X*						
	1064.71	1.6	4602	0.17	0.11	0.09	0.06	X*	X*						
	1423.06	1.2	4602	0.14	0.09	0.07	0.05	X*							
	1728.15	1.0	4602	0.13	0.08	0.06	0.04	X*							
	2133.20	0.82	4602	0.11	0.07	0.06	0.04	X*							
	2654.05	0.66	4602	0.10	0.07	0.05	0.03	X*							
	3426.39	0.51	4602	0.09	0.06	0.05	0.03	X*							

* Caution - The motor power may exceed the gear unit's mechanical torque capacity
◈ The mechanical power limit of the solid input shaft type "W" may limit the reducer rating.
All ratings are mechanical. See page 14 for thermal considerations.

lb	W	56C	140TC
SK 2382	49	53	57
SK 2282/02	57	62	66

Send Quote Requests to info@automatedpt.com
Call +1(800)985-6929 To Order or Order Online At Nordgearmotors.com

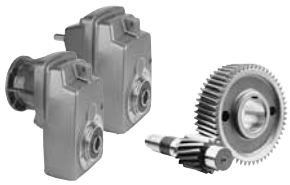

SK 3282
NEMA-C + W
Ratings & Combinations

Model Type	Gear Ratio	Output Speed	Output Torque*	Maximum input power◈ Solid input shafts type "W"				NEMA C-Face* Available Combinations							
				Input Speed											
	i_{tot}	n_2 1750 rpm	$T_{2\,max}$	1750 rpm	1150 rpm	875 rpm	580 rpm								
		[rpm]	[lb-in]	[hp]	[hp]	[hp]	[hp]	56C	140TC	180TC	210TC	250TC	280TC	320TC	360TC
SK 3282	4.48	391	4080	10.00	6.60	5.00	3.30	X	X	X	X				
	5.74	305	4964	10.00	6.60	5.00	3.30	X	X	X	X				
	6.70	261	5372	10.00	6.60	5.00	3.30	X	X	X	X				
	8.31	211	5983	10.00	6.60	5.00	3.30	X	X	X	X				
	9.80	179	7425	10.00	6.60	5.00	3.30	X	X	X	X				
	11.38	154	7266	10.00	6.60	5.00	3.30	X	X	X	X				
	14.11	124	7584	10.00	6.60	5.00	3.30	X	X	X	X				
	16.67	105	7443	10.00	6.60	5.00	3.30	X	X	X	X				
	20.18	87	7275	10.00	6.60	5.00	3.30	X	X	X	X				
	21.38	82	6390	8.31	5.49	4.16	2.74	X	X	X	X*				
	22.45	78	7080	8.76	5.78	4.38	2.89	X	X	X	X*				
	23.71	74	7124	8.36	5.52	4.18	2.76	X	X	X	X*				
	25.88	68	7487	8.08	5.33	4.04	2.67	X	X	X	X*				
	28.70	61	7700	7.45	4.92	3.73	2.46	X	X	X	X*				
	31.93	55	7761	6.77	4.47	3.39	2.24	X	X	X	X*				
	37.77	46	7390	5.39	3.56	2.70	1.78	X	X	X					
	38.62	45	5611	4.01	2.64	2.00	1.32	X	X	X*					
	42.02	42	8222	5.48	3.62	2.74	1.81	X	X	X*					
	44.85	39	6522	4.04	2.66	2.02	1.33	X	X	X*					
	48.04	36	4885	2.79	1.84	1.40	0.92	X	X						
	52.97	33	7478	3.92	2.58	1.96	1.29	X	X	X*					
	55.79	31	5682	2.79	1.84	1.40	0.92	X	X						
	64.12	27	8983	3.85	2.54	1.92	1.27	X	X	X*					
	65.89	27	6708	2.87	1.90	1.44	0.95	X	X						
	70.56	25	4991	1.98	1.31	0.99	0.65	X	X*						
	79.76	22	7523	2.63	1.73	1.31	0.87	X	X						
	88.74	20	8363	2.65	1.75	1.33	0.88	X	X						
	100.88	17	7142	1.93	1.27	0.96	0.64	X	X*						
	112.23	16	6815	1.73	1.14	0.86	0.57	X	X*						

* Caution - The motor power may exceed the gear unit's mechanical torque capacity
◈ The mechanical power limit of the solid input shaft type "W" may limit the reducer rating.
All ratings are mechanical. See page 14 for thermal considerations.

lb	W	56C	140TC	180TC	210TC
SK 3282	110	106	115	123	143

G1000 - Subject to Change Without Notice
Send Quote Requests to info@automatedpt.com
Call +1(800)985-6929 To Order or Order Online At Nordgearmotors.com

SK 3382, SK 3282/12
NEMA-C + W
Ratings & Combinations

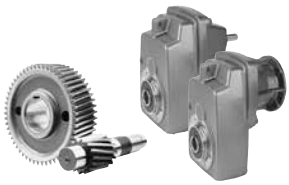

DRIVESYSTEMS

Model Type	Gear Ratio i_{tot}	Output Speed n_2 1750 rpm [rpm]	Output Torque* $T_{2\,max}$ [lb-in]	Maximum input power◈ Solid input shafts type "W" Input Speed 1750 rpm [hp]	1150 rpm [hp]	875 rpm [hp]	580 rpm [hp]	NEMA C-Face* Available Combinations 56C	140TC	180TC	210TC	250TC	280TC	320TC	360TC
SK 3382	89.60	20	5496	1.50	0.99	0.75	0.50	X	X*	X*					
	104.05	17	6505	1.50	0.99	0.75	0.50	X	X*	X*					
	126.93	14	6850	1.50	0.99	0.75	0.50	X	X*	X*					
	161.46	11	6974	1.22	0.80	0.61	0.40	X	X*						
	190.69	9.2	7664	1.12	0.74	0.56	0.37	X	X*						
	230.83	7.6	8850	1.07	0.70	0.53	0.35	X	X*						
	287.14	6.1	8301	0.80	0.53	0.40	0.27	X*	X*						
	408.58	4.3	7045	0.48	0.32	0.24	0.16	X*							
	482.56	3.6	7664	0.44	0.29	0.22	0.14	X*							
	584.13	3.0	8850	0.42	0.28	0.21	0.14	X*							
	726.61	2.4	8354	0.32	0.21	0.16	0.10	X*							
	808.42	2.2	9195	0.32	0.21	0.16	0.11	X*							
	919.00	1.9	7275	0.22	0.14	0.11	0.07	X*							
	1022.42	1.7	6965	0.19	0.12	0.09	0.06	X*							
SK 3282/12	87.73	20	7965	2.00	1.32	1.00	0.66	X	X	X*					
	114.23	15	7965	1.90	1.25	0.95	0.63	X	X*	X*					
	141.49	12	7965	1.52	1.00	0.76	0.50	X	X*	X*					
	179.57	9.7	7965	1.23	0.81	0.61	0.40	X	X*	X*					
	217.37	8.1	7965	1.02	0.68	0.51	0.34	X	X*	X*					
	270.39	6.5	7965	0.88	0.58	0.44	0.29	X*	X*	X*					
	358.12	4.9	7965	0.67	0.44	0.34	0.22	X*	X*	X*					
	461.81	3.8	7965	0.53	0.35	0.27	0.18	X*	X*	X*					
	520.83	3.4	7965	0.48	0.32	0.24	0.16	X*	X*	X*					
	686.08	2.6	7965	0.38	0.25	0.19	0.13	X*	X*	X*					
	853.43	2.1	7965	0.32	0.21	0.16	0.11	X*	X*	X*					
	1067.99	1.6	7965	0.26	0.17	0.13	0.08	X*	X*	X*					
	1335.98	1.3	7965	0.22	0.14	0.11	0.07	X*	X*	X*					
	1697.29	1.0	7965	0.18	0.12	0.09	0.06	X*	X*						
	2248.69	0.78	7965	0.15	0.10	0.08	0.05	X*							
	2797.18	0.63	7965	0.13	0.09	0.07	0.04	X*							
	3435.26	0.51	7965	0.12	0.08	0.06	0.04	X*							

* Caution - The motor power may exceed the gear unit's mechanical torque capacity
◈ The mechanical power limit of the solid input shaft type "W" may limit the reducer rating.
All ratings are mechanical. See page 14 for thermal considerations.

lb	W	56C	140TC	180TC
SK 3382	115	119	126	141
SK 3282/12	119	123	130	146

Send Quote Requests to info@automatedpt.com
Call +1(800)985-6929 To Order or Order Online At Nordgearmotors.com

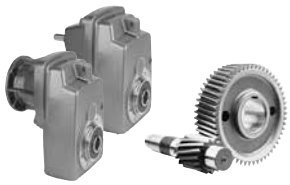

SK 4282
NEMA-C + W
Ratings & Combinations

Model Type	Gear Ratio	Output Speed	Output Torque*	Maximum input power◈ Solid input shafts type "W"				NEMA C-Face* Available Combinations							
				Input Speed											
	i_{tot}	n_2 1750 rpm	$T_{2\,max}$	1750 rpm	1150 rpm	875 rpm	580 rpm								
		[rpm]	[lb-in]	[hp]	[hp]	[hp]	[hp]	56C	140TC	180TC	210TC	250TC	280TC	320TC	360TC
SK 4282	4.70	372	9160	20.00	13.20	10.00	6.60			X	X	X			
	5.00	350	9160	20.00	13.20	10.00	6.60			X	X	X			
	5.43	322	9160	20.00	13.20	10.00	6.60			X	X	X			
	6.06	289	10620	20.00	13.20	10.00	6.60	X	X	X	X	X			
	7.13	245	10638	20.00	13.20	10.00	6.60	X	X	X	X	X			
	8.33	210	11257	20.00	13.20	10.00	6.60	X	X	X	X	X			
	9.23	190	14461	20.00	13.20	10.00	6.60	X	X	X	X	X			
	10.85	161	15045	20.00	13.20	10.00	6.60	X	X	X	X	X			
	12.68	138	15488	20.00	13.20	10.00	6.60	X	X	X	X	X			
	15.20	115	15930	20.00	13.20	10.00	6.60	X	X	X	X	X			
	18.18	96	15930	20.00	13.20	10.00	6.60	X	X	X	X	X			
	21.45	82	14921	19.41	12.81	9.71	6.41	X	X	X	X	X*			
	22.39	78	15036	18.61	12.28	9.30	6.14	X	X	X	X	X*			
	26.25	67	14231	15.13	9.98	7.56	4.99	X	X	X	X	X*			
	26.43	66	15815	16.56	10.93	8.28	5.47	X	X	X	X	X*			
	26.72	65	14160	14.60	9.64	7.30	4.82			X	X				
	32.04	55	15797	13.79	9.10	6.89	4.55			X	X				
	32.34	54	14337	12.28	8.11	6.14	4.05	X	X	X	X	X*			
	36.40	48	12169	9.27	6.12	4.63	3.06			X	X*				
	36.81	48	12390	9.44	6.23	4.72	3.11	X	X	X	X*				
	38.31	46	17700	12.92	8.53	6.46	4.26			X	X*				
	40.74	43	13771	9.40	6.20	4.70	3.10	X	X	X	X*				
	43.65	40	14160	8.99	5.93	4.49	2.97			X	X*				
	45.05	39	14107	8.73	5.76	4.36	2.88	X	X	X	X*				
	52.20	34	16089	8.68	5.73	4.34	2.86			X	X*				
	61.60	28	15877	7.05	4.66	3.53	2.33			X	X*				
	75.39	23	14063	5.13	3.39	2.57	1.69			X	X*				
	76.70	23	14063	5.13	3.39	2.57	1.69	X	X	X					
	90.52	19	14160	4.27	2.82	2.13	1.41	X	X	X*					
	110.78	16	14160	3.59	2.37	1.80	1.19	X	X	X*					
	155.40	11	11284	1.97	1.30	0.98	0.65	X	X*						

* Caution - The motor power may exceed the gear unit's mechanical torque capacity
◈ The mechanical power limit of the solid input shaft type "W" may limit the reducer rating.
All ratings are mechanical. See page 14 for thermal considerations.

W + NEMA

lb	W	56C	140TC	180TC	210TC	250TC
SK 4282	165	154	170	170	201	223

Send Quote Requests to info@automatedpt.com
Call +1(800)985-6929 To Order or Order Online At Nordgearmotors.com

SK 4382, SK 4282/12
NEMA-C + W
Ratings & Combinations

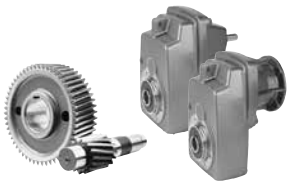

DRIVESYSTEMS

Model Type	Gear Ratio	Output Speed	Output Torque*	Maximum input power◈ Solid input shafts type "W"				NEMA C-Face* Available Combinations							
				Input Speed											
	i_{tot}	n_2 1750 rpm	$T_{2\,max}$	1750 rpm	1150 rpm	875 rpm	580 rpm								
		[rpm]	[lb-in]	[hp]	[hp]	[hp]	[hp]	56C	140TC	180TC	210TC	250TC	280TC	320TC	360TC
SK 4382	66.65	26	10620	4.38	2.89	2.19	1.45	X	X	X*					
	86.83	20	17523	5.00	3.30	2.50	1.65	X	X	X					
	103.82	17	17700	4.77	3.15	2.39	1.58	X	X	X*					
	118.38	15	17700	4.21	2.78	2.11	1.39	X	X	X*					
	140.60	12	17700	3.37	2.22	1.69	1.11	X	X	X*					
	160.20	11	14664	2.56	1.69	1.28	0.84	X	X	X*					
	191.57	9.1	17612	2.54	1.68	1.27	0.84	X	X	X*					
	211.09	8.3	14470	1.91	1.26	0.95	0.63	X	X*						
	253.12	6.9	17355	1.90	1.25	0.95	0.63	X	X*						
	272.54	6.4	13912	1.41	0.93	0.71	0.47	X	X*						
	302.65	5.8	18381	1.69	1.12	0.85	0.56	X	X*						
	326.81	5.4	16727	1.43	0.95	0.72	0.47	X	X*						
	344.84	5.1	14709	1.19	0.79	0.60	0.39	X	X*						
	390.76	4.5	17700	1.26	0.83	0.63	0.42	X	X*						
	412.38	4.2	17612	1.17	0.77	0.59	0.39	X	X*						
	445.23	3.9	14744	0.91	0.60	0.46	0.30	X*	X*						
	532.44	3.3	17700	0.93	0.61	0.46	0.31	X*	X*						
	605.88	2.9	13054	0.60	0.40	0.30	0.20	X*	X*						
	654.27	2.7	10912	0.47	0.31	0.23	0.15	X*	X*						
	782.32	2.2	13063	0.46	0.30	0.23	0.15	X*	X*						
	1097.48	1.6	9629	0.24	0.16	0.12	0.08	X*	X*						
	1129.91	1.5	14160	0.34	0.22	0.17	0.11	X*	X*						
	1585.08	1.1	12567	0.22	0.14	0.11	0.07	X*	X*						
SK 4282/12	127.52	14	15930	3.00	1.98	1.50	0.99	X	X	X*					
	152.47	11	15930	2.78	1.84	1.39	0.92	X	X	X*					
	176.96	9.9	15930	2.50	1.65	1.25	0.83	X	X	X*					
	234.38	7.5	15930	1.90	1.25	0.95	0.63	X	X*	X*					
	302.24	5.8	15930	1.47	0.97	0.73	0.48	X	X*	X*					
	340.87	5.1	15930	1.29	0.85	0.64	0.43	X	X*	X*					
	409.92	4.3	15930	1.09	0.72	0.54	0.36	X	X*	X*					
	558.54	3.1	15930	0.84	0.55	0.42	0.28	X*	X*	X*					
	698.96	2.5	15930	0.69	0.45	0.34	0.23	X*	X*	X*					
	873.31	2.0	15930	0.56	0.37	0.28	0.18	X*	X*	X*					
	1110.82	1.6	15930	0.46	0.30	0.23	0.15	X*	X*						
	1343.53	1.3	15930	0.38	0.25	0.19	0.13	X*							
	1830.65	0.96	15930	0.30	0.20	0.15	0.10	X*							
	2248.25	0.78	15930	0.25	0.17	0.13	0.08	X*							
	2782.46	0.63	15930	0.21	0.14	0.11	0.07	X*							

* Caution - The motor power may exceed the gear unit's mechanical torque capacity
◈ The mechanical power limit of the solid input shaft type "W" may limit the reducer rating.
All ratings are mechanical. See page 14 for thermal considerations.

lb	W	56C	140TC	180TC
SK 4382	176	171	181	190
SK 4282/12	152	157	163	179

Send Quote Requests to info@automatedpt.com
Call +1(800)985-6929 To Order or Order Online At Nordgearmotors.com

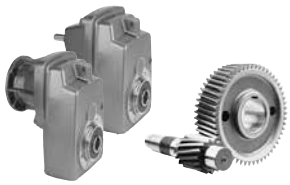

SK 5282
NEMA-C + W
Ratings & Combinations

Model Type	Gear Ratio	Output Speed	Output Torque*	Maximum input power◈ Solid input shafts type "W"				NEMA C-Face* Available Combinations							
				Input Speed											
	i_{tot}	n_2 1750 rpm	$T_{2\,max}$	1750 rpm	1150 rpm	875 rpm	580 rpm								
		[rpm]	[lb-in]	[hp]	[hp]	[hp]	[hp]	56C	140TC	180TC	210TC	250TC	280TC	320TC	360TC
SK 5282	4.32	405	13718	30.00	19.80	15.00	9.90					X	X		
	5.01	349	15045	30.00	19.80	15.00	9.90					X	X		
	5.29	331	15488	30.00	19.80	15.00	9.90					X	X		
	5.71	306	15930	30.00	19.80	15.00	9.90					X	X		
	6.33	276	18709	30.00	19.80	15.00	9.90			X	X	X	X		
	7.17	244	19125	30.00	19.80	15.00	9.90			X	X	X	X		
	8.70	201	20886	30.00	19.80	15.00	9.90	X	X	X	X	X	X		
	9.46	185	20355	30.00	19.80	15.00	9.90			X	X	X	X		
	10.71	163	22125	30.00	19.80	15.00	9.90			X	X	X	X		
	13.00	135	23267	30.00	19.80	15.00	9.90	X	X	X	X	X	X		
	15.38	114	23010	30.00	19.80	15.00	9.90	X	X	X	X	X	X		
	17.59	99	24338	30.00	19.80	15.00	9.90	X	X	X	X	X	X		
	18.88	93	23010	30.00	19.80	15.00	9.90	X	X	X	X	X	X		
	20.36	86	27435	30.00	19.80	15.00	9.90	X	X	X	X	X	X		
	25.00	70	25665	28.51	18.81	14.25	9.41	X	X	X	X	X	X*		
	30.50	57	25665	23.21	15.32	11.61	7.66	X	X	X	X	X			
	33.43	52	20355	16.79	11.08	8.40	5.54	X	X	X	X	X*	X*		
	35.46	49	23895	18.58	12.26	9.29	6.13			X	X				
	40.80	43	22125	15.10	9.96	7.55	4.98	X	X	X	X	X*			
	41.94	42	28320	18.87	12.46	9.44	6.23			X	X				
	47.27	37	21240	12.47	8.23	6.23	4.11			X	X				
	51.49	34	28630	15.44	10.19	7.72	5.10			X	X				
	55.55	32	22125	11.23	7.41	5.62	3.71	X	X	X	X				
	55.90	31	23010	11.32	7.47	5.66	3.73			X	X				
	68.63	25	26285	10.43	6.88	5.21	3.44			X	X				
	81.61	21	16178	5.39	3.56	2.70	1.78	X	X	X					
	91.81	19	24417	7.36	4.86	3.68	2.43			X	X*				
	100.19	17	19833	5.35	3.53	2.67	1.77	X	X	X					
	134.03	13	23488	4.84	3.20	2.42	1.60	X	X	X*					

W + NEMA

* Caution - The motor power may exceed the gear unit's mechanical torque capacity
◈ The mechanical power limit of the solid input shaft type "W" may limit the reducer rating.
All ratings are mechanical. See page 14 for thermal considerations.

lb	W	56C	140TC	180TC	210TC	250TC	280TC
SK 5282	245	234	249	249	280	302	302

Send Quote Requests to info@automatedpt.com
Call +1(800)985-6929 To Order or Order Online At Nordgearmotors.com

SK 5382, SK 5282/12
NEMA-C + W
Ratings & Combinations

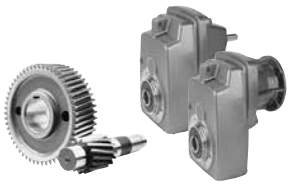

DRIVESYSTEMS

Model Type	Gear Ratio	Output Speed	Output Torque*	Maximum input power◈ Solid input shafts type "W"				NEMA C-Face* Available Combinations							
				Input Speed											
	i_{tot}	n_2 1750 rpm	$T_{2\,max}$	1750 rpm	1150 rpm	875 rpm	580 rpm								
		[rpm]	[lb-in]	[hp]	[hp]	[hp]	[hp]	56C	140TC	180TC	210TC	250TC	280TC	320TC	360TC
SK 5382	82.72	21	24736	7.50	4.95	3.75	2.48	X	X	X	X*				
	91.71	19	25665	7.50	4.95	3.75	2.48	X	X	X	X*				
	117.37	15	24338	5.79	3.82	2.90	1.91	X	X	X	X*				
	138.82	13	28320	5.84	3.86	2.92	1.93	X	X	X	X*				
	153.92	11	28320	4.94	3.26	2.47	1.63	X	X	X*	X*				
	171.27	10	24780	3.93	2.59	1.97	1.30	X	X	X*					
	202.57	8.6	28320	3.86	2.55	1.93	1.28	X	X	X*					
	248.70	7.0	28320	3.15	2.08	1.57	1.04	X	X	X*					
	269.99	6.5	23895	2.46	1.63	1.23	0.81	X	X	X*					
	331.48	5.3	28320	2.38	1.57	1.19	0.79	X	X	X*					
	361.69	4.8	24780	1.89	1.25	0.94	0.62	X	X*						
	427.79	4.1	28320	1.84	1.22	0.92	0.61	X	X*						
	525.20	3.3	28320	1.48	0.98	0.74	0.49	X	X*						
	570.18	3.1	24780	1.22	0.80	0.61	0.40	X	X*						
	700.03	2.5	28320	1.12	0.74	0.56	0.37	X	X*						
	936.45	1.9	23895	0.72	0.48	0.36	0.24	X*	X*						
	1367.08	1.3	23895	0.49	0.33	0.25	0.16	X*	X*						
SK 5282/12	142.18	12	26550	5.00	3.30	2.50	1.65	X	X	X					
	174.55	10	26550	4.21	2.78	2.11	1.39	X	X	X*					
	232.66	7.5	26550	3.16	2.09	1.58	1.04	X	X	X*					
	273.15	6.4	26550	2.70	1.78	1.35	0.89	X	X	X*					
	338.35	5.2	26550	2.19	1.45	1.10	0.72	X	X	X*					
	448.15	3.9	26550	1.64	1.08	0.82	0.54	X	X*	X*					
	550.94	3.2	26550	1.35	0.89	0.67	0.44	X	X*	X*					
	689.45	2.5	26550	1.05	0.70	0.53	0.35	X	X*	X*					
	862.46	2.0	26550	0.90	0.59	0.45	0.30	X*	X*	X*					
	1095.71	1.6	26550	0.73	0.48	0.36	0.24	X*	X*						
	1334.62	1.3	26550	0.60	0.40	0.30	0.20	X*	X*						
	1805.75	0.97	26550	0.46	0.31	0.23	0.15	X*							
	2217.67	0.79	26550	0.39	0.26	0.19	0.13	X*							
	2772.22	0.63	26550	0.32	0.21	0.16	0.11	X*							

* Caution - The motor power may exceed the gear unit's mechanical torque capacity
◈ The mechanical power limit of the solid input shaft type "W" may limit the reducer rating.
All ratings are mechanical. See page 14 for thermal considerations.

lb	W	56C	140TC	180TC	210TC
SK 5382	265	260	269	278	278
SK 5282/12	231	326	243	258	–

Send Quote Requests to info@automatedpt.com
Call +1(800)985-6929 To Order or Order Online At Nordgearmotors.com

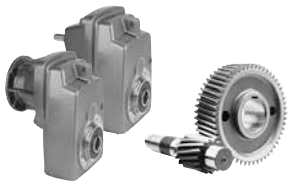

SK 6282
NEMA-C + W
Ratings & Combinations

Model Type	Gear Ratio	Output Speed	Output Torque*	Maximum input power◈ Solid input shafts type "W"				NEMA C-Face* Available Combinations							
				Input Speed											
	i_{tot}	n_2 1750 rpm	$T_{2\,max}$	1750 rpm	1150 rpm	875 rpm	580 rpm								
		[rpm]	[lb-in]	[hp]	[hp]	[hp]	[hp]	56C	140TC	180TC	210TC	250TC	280TC	320TC	360TC
SK 6282	4.39	399	18001	60.00	39.60	30.00	19.80					X	X	X	X*
	4.88	359	19081	60.00	39.60	30.00	19.80			X	X	X	X	X	X*
	5.50	318	20275	60.00	39.60	30.00	19.80			X	X	X	X	X	X*
	5.78	303	20656	60.00	39.60	30.00	19.80			X	X	X	X	X	X*
	5.99	292	21169	60.00	39.60	30.00	19.80					X	X	X	X*
	6.74	260	26462	60.00	39.60	30.00	19.80			X	X	X	X	X	X*
	7.82	224	23736	60.00	39.60	30.00	19.80			X	X	X	X	X	X*
	9.39	186	24373	60.00	39.60	30.00	19.80			X	X	X	X	X	X*
	10.64	164	38179	60.00	39.60	30.00	19.80			X	X	X	X	X	X*
	12.35	142	38843	60.00	39.60	30.00	19.80			X	X	X	X	X	X*
	14.83	118	39604	60.00	39.60	30.00	19.80			X	X	X	X	X	X*
	18.70	94	39179	58.43	38.57	29.22	19.28			X	X	X	X	X	X*
	22.95	76	40135	48.40	31.94	24.20	15.97			X	X	X	X	X*	X*
	26.05	67	40117	42.65	28.15	21.32	14.07			X	X	X	X		
	29.90	59	40152	37.59	24.81	18.79	12.40			X	X	X	X*		
	39.48	44	28320	19.77	13.05	9.89	6.52			X	X	X*	X*		
	49.75	35	35754	19.86	13.10	9.93	6.55			X	X	X*	X*		
	61.08	29	40135	18.47	12.19	9.23	6.09			X	X	X*	X*		
	65.44	27	29816	12.77	8.43	6.39	4.22			X	X				
	80.33	22	36559	12.76	8.42	6.38	4.21			X	X				

* Caution - The motor power may exceed the gear unit's mechanical torque capacity
◈ The mechanical power limit of the solid input shaft type "W" may limit the reducer rating.
All ratings are mechanical. See page 14 for thermal considerations.

W + NEMA

lb	W	180TC	210TC	250TC	280TC	320TC	360TC
SK 6282	477	448	476	531	531	562	595

Send Quote Requests to info@automatedpt.com
Call +1(800)985-6929 To Order or Order Online At Nordgearmotors.com

SK 6382, SK 6382/22, 6382/32 NEMA-C + W Ratings & Combinations

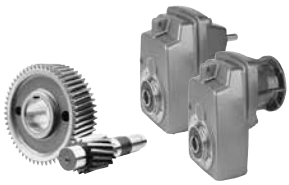

DRIVESYSTEMS

Model Type	Gear Ratio	Output Speed	Output Torque*	Maximum input power◈ Solid input shafts type "W"				NEMA C-Face* Available Combinations							
				Input Speed											
	i_{tot}	n_2 1750 rpm	$T_{2\,max}$	1750 rpm	1150 rpm	875 rpm	580 rpm								
		[rpm]	[lb-in]	[hp]	[hp]	[hp]	[hp]	56C	140TC	180TC	210TC	250TC	280TC	320TC	360TC
SK 6382	24.42	72	41507	30.00	19.80	15.00	9.90	X	X	X	X	X	X		
	28.72	61	40710	30.00	19.80	15.00	9.90	X	X	X	X	X	X		
	30.91	57	40268	30.00	19.80	15.00	9.90	X	X	X	X	X	X		
	36.34	48	40268	30.00	19.80	15.00	9.90	X	X	X	X	X	X		
	42.46	41	40268	26.20	17.29	13.10	8.64	X	X	X	X	X	X*		
	51.07	34	44958	24.25	16.01	12.13	8.00	X	X	X	X	X	X*		
	59.66	29	48675	22.40	14.78	11.20	7.39	X	X	X	X	X	X*		
	73.50	24	49295	18.77	12.39	9.39	6.19	X	X	X	X	X*			
	75.18	23	53100	19.38	12.79	9.69	6.39	X	X	X	X	X*	X*		
	92.63	19	53100	16.01	10.57	8.00	5.28	X	X	X	X	X*			
	114.79	15	52038	12.39	8.17	6.19	4.09	X	X	X	X	X*			
	126.87	14	40533	9.00	5.94	4.50	2.97	X	X	X	X*				
	159.88	11	51065	8.91	5.88	4.46	2.94	X	X	X	X*				
	171.34	10	49295	7.82	5.16	3.91	2.58			X	X*				
	212.33	8.2	41330	5.38	3.55	2.69	1.77			X	X*				
	225.79	7.8	35577	4.40	2.91	2.20	1.45	X	X	X*					
	251.76	7.0	39648	4.40	2.91	2.20	1.45	X	X	X*					
	267.59	6.5	52038	5.37	3.54	2.68	1.77			X	X*				
	317.28	5.5	49914	4.36	2.87	2.18	1.44	X	X	X*					
	393.19	4.5	52038	3.72	2.45	1.86	1.23	X	X	X*					
	445.09	3.9	36905	2.28	1.51	1.14	0.75	X	X						
	551.58	3.2	45755	2.32	1.53	1.16	0.77	X	X						
SK 6382/22	298.46	5.9	47790	4.47	2.95	2.24	1.48	X	X	X*					
	347.33	5.0	47790	3.79	2.50	1.90	1.25	X	X	X*					
	435.29	4.0	47790	3.03	2.00	1.52	1.00	X	X	X*					
	569.11	3.1	47790	2.35	1.55	1.18	0.78	X	X	X*					
	637.53	2.7	47790	2.05	1.35	1.02	0.68	X	X	X*					
	818.71	2.1	47790	1.59	1.05	0.80	0.53	X	X*	X*					
	1104.39	1.6	47790	1.21	0.80	0.61	0.40	X	X*	X*					
	1259.27	1.4	47790	1.06	0.70	0.53	0.35	X	X*	X*					
	1859.20	0.94	47790	0.77	0.51	0.38	0.25	X*	X*						
	2203.53	0.79	47790	0.65	0.43	0.33	0.22	X*	X*						
	2738.39	0.64	42303	0.48	0.32	0.24	0.16	X*	X*						
	3450.76	0.51	47790	0.44	0.29	0.22	0.15	X*	X*						
	4164.86	0.42	42303	0.34	0.22	0.17	0.11	X*	X*						
SK 6382/32	159.23	11	42303	7.38	4.87	3.69	2.44	X	X	X*	X*				
	191.51	9.1	42303	6.11	4.03	3.05	2.02	X	X	X*	X*				
	223.73	7.8	42303	5.24	3.46	2.62	1.73	X	X	X*	X*				

* Caution - The motor power may exceed the gear unit's mechanical torque capacity
◈ The mechanical power limit of the solid input shaft type "W" may limit the reducer rating.
All ratings are mechanical. See page 14 for thermal considerations.

lb	W	56C	140TC	180TC	210TC	250TC	280TC
SK 6382	423	403	412	428	459	481	481
SK 6382/22	443	439	448	456	–	–	–
SK 6382/32	467	463	472	481	500	–	–

Send Quote Requests to info@automatedpt.com
Call +1(800)985-6929 To Order or Order Online At Nordgearmotors.com

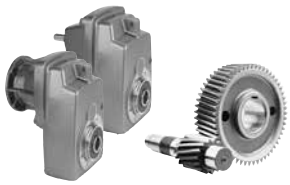

SK 7282
NEMA-C + W
Ratings & Combinations

Model Type	Gear Ratio	Output Speed	Output Torque*	Maximum input power◈ Solid input shafts type "W"				NEMA C-Face* Available Combinations							
				Input Speed											
	i_{tot}	n_2 1750 rpm	$T_{2\,max}$	1750 rpm	1150 rpm	875 rpm	580 rpm								
		[rpm]	[lb-in]	[hp]	[hp]	[hp]	[hp]	56C	140TC	180TC	210TC	250TC	280TC	320TC	360TC
SK 7282	4.26	411	32028	60.00	39.60	30.00	19.80			X	X	X	X	X	X*
	5.04	347	34772	60.00	39.60	30.00	19.80							X	X*
	5.30	330	35975	60.00	39.60	30.00	19.80			X	X	X	X	X	X*
	5.98	293	38250	60.00	39.60	30.00	19.80							X	X*
	6.36	275	39383	60.00	39.60	30.00	19.80			X	X	X	X	X	X*
	7.49	234	39887	60.00	39.60	30.00	19.80			X	X	X	X	X	X*
	8.66	202	37365	60.00	39.60	30.00	19.80			X	X	X	X	X	X*
	9.48	185	55428	60.00	39.60	30.00	19.80			X	X	X	X	X	X*
	9.92	176	37816	60.00	39.60	30.00	19.80			X	X	X	X	X	X*
	11.16	157	55056	60.00	39.60	30.00	19.80			X	X	X	X	X	X*
	12.89	136	51896	60.00	39.60	30.00	19.80			X	X	X	X	X	X*
	16.29	107	57251	60.00	39.60	30.00	19.80			X	X	X	X	X	X*
	19.97	88	51419	60.00	39.60	30.00	19.80			X	X	X	X	X	X*
	22.87	77	51348	60.00	39.60	30.00	19.80			X	X	X	X	X	X*
	26.89	65	51392	53.00	34.98	26.50	17.49			X	X	X	X	X	X*
	34.64	51	51365	41.57	27.43	20.78	13.72			X	X	X	X		
	37.27	47	57286	42.72	28.20	21.36	14.10					X	X		
	45.02	39	38781	24.00	15.84	12.00	7.92			X	X	X	X		
	45.67	38	51410	31.00	20.46	15.50	10.23					X	X		
	56.91	31	48976	24.09	15.90	12.04	7.95			X	X	X	X*		
	69.73	25	51365	20.38	13.45	10.19	6.72			X	X	X	X*		

* Caution - The motor power may exceed the gear unit's mechanical torque capacity
◈ The mechanical power limit of the solid input shaft type "W" may limit the reducer rating.
All ratings are mechanical. See page 14 for thermal considerations.

W + NEMA

lb	W	180TC	210TC	250TC	280TC	320TC	360TC
SK 7282	613	615	615	670	670	734	734

Send Quote Requests to info@automatedpt.com
Call +1(800)985-6929 To Order or Order Online At Nordgearmotors.com

SK 7382, SK 7382/22, SK 7382/32 NEMA-C + W Ratings & Combinations

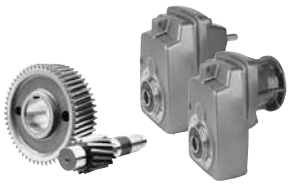

DRIVESYSTEMS

Model Type	Gear Ratio	Output Speed	Output Torque*	Maximum input power◈ Solid input shafts type "W"				NEMA C-Face* Available Combinations							
				Input Speed											
	i_{tot}	n_2 1750 rpm	$T_{2\,max}$	1750 rpm	1150 rpm	875 rpm	580 rpm								
		[rpm]	[lb-in]	[hp]	[hp]	[hp]	[hp]	56C	140TC	180TC	210TC	250TC	280TC	320TC	360TC
SK 7382	23.46	75	58499	60.00	39.60	30.00	19.80			X	X	X	X	X	X*
	26.88	65	58587	60.00	39.60	30.00	19.80			X	X	X	X	X	X*
	30.42	58	58587	53.92	35.58	26.96	17.79			X	X	X	X	X	X*
	36.92	47	58587	43.69	28.84	21.85	14.42			X	X	X	X	X*	X*
	46.66	38	62658	37.78	24.93	18.89	12.47			X	X	X	X	X*	X*
	53.38	33	62658	32.81	21.65	16.40	10.83			X	X	X	X		
	59.52	29	62481	28.75	18.97	14.37	9.49			X	X	X	X*	X*	X*
	68.10	26	63720	26.29	17.35	13.14	8.67			X	X	X	X*		
	78.81	22	65667	22.92	15.13	11.46	7.56			X	X	X	X*		
	93.18	19	66729	20.12	13.28	10.06	6.64			X	X	X	X*	X*	X*
	106.59	16	66729	16.94	11.18	8.47	5.59			X	X	X*	X*		
	123.37	14	66729	14.82	9.78	7.41	4.89			X	X	X*	X*		
	150.57	12	66729	12.71	8.39	6.35	4.19			X	X	X*			
	162.17	11	55490	9.68	6.39	4.84	3.20			X	X*				
	204.99	8.5	66729	9.00	5.94	4.50	2.97			X	X*				
	216.43	8.1	73455	9.44	6.23	4.72	3.12			X	X*				
	273.57	6.4	66729	6.78	4.47	3.39	2.24			X	X*				
	338.79	5.2	66729	5.51	3.63	2.75	1.82			X	X*				
SK 7382/22	376.26	4.7	62658	4.67	3.08	2.34	1.54	X	X	X*	X*				
	435.50	4.0	62658	3.98	2.62	1.99	1.31	X	X	X*	X*				
	569.97	3.1	62658	3.08	2.03	1.54	1.02	X	X	X*	X*				
	714.31	2.4	62658	2.39	1.57	1.19	0.79	X	X	X*	X*				
	933.91	1.9	62658	1.89	1.25	0.94	0.62	X	X*	X*	X*				
	1046.18	1.7	62658	1.69	1.12	0.85	0.56	X	X*	X*					
	1343.50	1.3	62658	1.29	0.85	0.65	0.43	X	X*	X*					
	1812.31	0.97	62658	1.02	0.67	0.51	0.34	X	X*	X*					
	2066.45	0.85	62658	0.90	0.59	0.45	0.30	X*	X*	X*					
	2635.97	0.66	62658	0.71	0.47	0.35	0.23	X*	X*						
	3615.97	0.48	62658	0.53	0.35	0.27	0.18	X*	X*						
	4892.48	0.36	62658	0.41	0.27	0.21	0.14	X*	X*						
	5662.68	0.31	62658	0.36	0.24	0.18	0.12	X*	X*						
SK 7382/32	223.20	7.8	62481	7.50	4.95	3.75	2.48	X	X	X	X				
	295.54	5.9	62481	5.85	3.86	2.92	1.93	X	X	X	X				

* Caution - The motor power may exceed the gear unit's mechanical torque capacity
◈ The mechanical power limit of the solid input shaft type "W" may limit the reducer rating.
All ratings are mechanical. See page 14 for thermal considerations.

lb	W	56C	140TC	180TC	210TC	250TC	280TC	320TC	360TC
SK 7382	628	–	–	602	631	686	686	750	750
SK 7382/22	604	600	608	617	617	–	–	–	–
SK 7382/32	628	633	642	661	661	–	–	–	–

Send Quote Requests to info@automatedpt.com
Call +1(800)985-6929 To Order or Order Online At Nordgearmotors.com

Send Quote Requests to info@automatedpt.com Call +1(800)985-6929 To Order or Order Online At Nordgearmotors.com

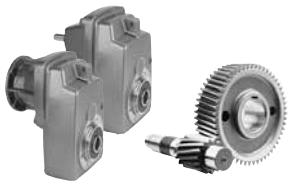

SK 8282 NEMA-C + W Ratings & Combinations

Model Type	Gear Ratio	Output Speed	Output Torque*	Maximum input power◈ Solid input shafts type "W"				NEMA C-Face* Available Combinations							
				Input Speed											
	i_{tot}	n_2 1750 rpm	$T_{2\,max}$	1750 rpm	1150 rpm	875 rpm	580 rpm								
		[rpm]	[lb-in]	[hp]	[hp]	[hp]	[hp]	56C	140TC	180TC	210TC	250TC	280TC	320TC	360TC
SK 8282	4.52	387	43277	100.00	66.00	50.00	33.00			X	X	X	X	X	X
	6.92	253	60056	100.00	66.00	50.00	33.00			X	X	X	X	X	X
	8.26	212	64570	100.00	66.00	50.00	33.00			X	X	X	X	X	X
	9.67	181	57711	100.00	66.00	50.00	33.00			X	X	X	X	X	X
	10.86	161	91067	100.00	66.00	50.00	33.00			X	X	X	X	X	X
	12.96	135	91102	100.00	66.00	50.00	33.00			X	X	X	X	X	X
	15.18	115	83898	100.00	66.00	50.00	33.00			X	X	X	X	X	X
	17.40	101	85818	100.00	66.00	50.00	33.00			X	X	X	X	X	X
	21.13	83	93969	100.00	66.00	50.00	33.00			X	X	X	X	X	X
	24.50	71	93837	100.00	66.00	50.00	33.00			X	X	X	X	X	X
	28.33	62	88482	87.04	57.45	43.52	28.72			X	X	X	X	X	X
	32.24	54	91562	78.45	51.78	39.23	25.89							X	X*
	39.11	45	82677	59.03	38.96	29.52	19.48					X	X		
	39.16	45	93943	67.08	44.27	33.54	22.13							X	X*
	47.51	37	93925	55.14	36.39	27.57	18.20					X	X*		
	59.44	29	57375	26.40	17.42	13.20	8.71			X	X	X	X*		
	72.21	24	69694	26.54	17.52	13.27	8.76			X	X	X	X*		

* Caution - The motor power may exceed the gear unit's mechanical torque capacity
◈ The mechanical power limit of the solid input shaft type "W" may limit the reducer rating.
All ratings are mechanical. See page 14 for thermal considerations.

W + NEMA

lb	W	180TC	210TC	250TC	280TC	320TC	360TC
SK 8282	1060	897	952	952	983	1016	1138

Send Quote Requests to info@automatedpt.com
Call +1(800)985-6929 To Order or Order Online At Nordgearmotors.com

SK 8382, SK 8382/32
SK 8382/42 NEMA-C + W
Ratings & Combinations

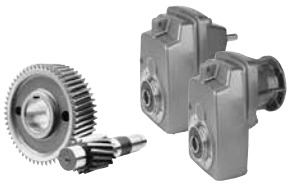

DRIVESYSTEMS

Model Type	Gear Ratio	Output Speed	Output Torque*	Maximum input power◈ Solid input shafts type "W"				NEMA C-Face* Available Combinations							
				Input Speed											
	i_{tot}	n_2 1750 rpm	$T_{2\,max}$	1750 rpm	1150 rpm	875 rpm	580 rpm								
		[rpm]	[lb-in]	[hp]	[hp]	[hp]	[hp]	56C	140TC	180TC	210TC	250TC	280TC	320TC	360TC
SK 8382	30.92	57	106997	60.00	39.60	30.00	19.80			X	X	X	X	X	X*
	35.88	49	106908	60.00	39.60	30.00	19.80			X	X	X	X	X	X*
	43.59	40	93810	59.54	39.30	29.77	19.65			X	X	X	X	X	X*
	47.80	37	107085	60.00	39.60	30.00	19.80			X	X	X	X	X	X*
	57.43	30	107085	50.97	33.64	25.49	16.82			X	X	X	X	X	X*
	65.22	27	100005	42.84	28.28	21.42	14.14			X	X	X	X	X*	X*
	75.69	23	107085	39.08	25.79	19.54	12.90			X	X	X	X	X*	X*
	90.94	19	107085	32.28	21.31	16.14	10.65			X	X	X	X	X*	X*
	103.21	17	107085	28.88	19.06	14.44	9.53			X	X	X	X*		
	118.47	15	110183	26.22	17.31	13.11	8.65			X	X	X	X*		
	125.38	14	107882	23.96	15.82	11.98	7.91			X	X	X	X*		
	143.91	12	110625	21.06	13.90	10.53	6.95			X	X	X	X*		
	152.83	11	116820	20.39	13.46	10.19	6.73			X	X	X	X*		
	185.66	9.4	112218	16.74	11.05	8.37	5.52			X	X	X*	X*		
	201.00	8.7	95580	13.19	8.71	6.60	4.35			X	X				
	242.02	7.2	115935	13.24	8.74	6.62	4.37			X	X	X*	X*		
	294.01	6.0	112395	10.70	7.06	5.35	3.53			X	X	X*	X*		
	318.31	5.5	115050	10.04	6.63	5.02	3.31			X	X				
	386.68	4.5	112395	8.03	5.30	4.01	2.65			X	X*				
SK 8382/32	612.94	2.9	107085	4.93	3.25	2.46	1.63	X	X	X*	X*				
	718.43	2.4	107085	4.08	2.69	2.04	1.35	X	X	X*	X*				
	891.21	2.0	107085	3.40	2.24	1.70	1.12	X	X	X*	X*				
	1064.91	1.6	107085	2.72	1.79	1.36	0.90	X	X	X*	X*				
	1366.83	1.3	107085	2.21	1.46	1.10	0.73	X	X	X*	X*				
	1697.85	1.0	107085	1.70	1.12	0.85	0.56	X	X*	X*	X*				
	2416.28	0.72	107085	1.22	0.81	0.61	0.40	X	X*	X*					
	3005.57	0.58	107085	1.04	0.69	0.52	0.34	X	X*						
	3524.83	0.50	107085	0.90	0.60	0.45	0.30	X*	X*						
	4211.43	0.42	107085	0.77	0.51	0.38	0.25	X*	X*						
	5507.20	0.32	107085	0.60	0.39	0.30	0.20	X*	X*						
	6616.79	0.26	107085	0.50	0.33	0.25	0.16	X*	X*						
SK 8382/42	185.94	9.4	107085	10.00	6.60	5.00	3.30	X	X	X	X	X*	X*		
	223.40	7.8	107085	10.00	6.60	5.00	3.30	X	X	X	X	X*	X*		
	294.43	5.9	107085	10.00	6.60	5.00	3.30	X	X	X	X	X*	X*		
	346.66	5.0	107085	8.50	5.61	4.25	2.80	X	X	X	X*	X*	X*		
	468.52	3.7	107085	6.29	4.15	3.14	2.07	X	X	X	X*	X*	X*		
	551.02	3.2	107085	5.44	3.59	2.72	1.79	X	X	X	X*	X*	X*		

* Caution - The motor power may exceed the gear unit's mechanical torque capacity
◈ The mechanical power limit of the solid input shaft type "W" may limit the reducer rating.
All ratings are mechanical. See page 14 for thermal considerations.

lb	W	56C	140TC	180TC	210TC	250TC	280TC	320TC	360TC
SK 8382	904	–	–	877	906	961	961	992	1025
SK 8382/32	904	908	908	908	908	–	–	–	–
SK 8382/42	959	948	948	963	994	995	1017	–	–

Send Quote Requests to info@automatedpt.com
Call +1(800)985-6929 To Order or Order Online At Nordgearmotors.com

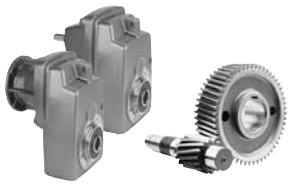

SK 9282, SK9382, SK 9382/42 SK 9382/52 NEMA-C + W Ratings & Combinations

Model Type	Gear Ratio	Output Speed	Output Torque*	Maximum input power◈ Solid input shafts type "W"				NEMA C-Face* Available Combinations							
				Input Speed											
	i_{tot}	n_2 1750 rpm	$T_{2\,max}$	1750 rpm	1150 rpm	875 rpm	580 rpm								
		[rpm]	[lb-in]	[hp]	[hp]	[hp]	[hp]	56C	140TC	180TC	210TC	250TC	280TC	320TC	360TC
SK 9282	5.34	328	73774	200.00	132.00	100.00	66.00								X
	5.78	303	78101	200.00	132.00	100.00	66.00			X	X	X	X	X	X
	7.06	248	89527	200.00	132.00	100.00	66.00			X	X	X	X	X	X
	8.64	203	98766	200.00	132.00	100.00	66.00			X	X	X	X	X	X
	10.18	172	95509	200.00	132.00	100.00	66.00			X	X	X	X	X	X
	12.01	146	122201	200.00	132.00	100.00	66.00			X	X	X	X	X	X
	14.70	119	130228	200.00	132.00	100.00	66.00			X	X	X	X	X	X
	17.33	101	137104	200.00	132.00	100.00	66.00			X	X	X	X	X	X
	20.13	87	140945	194.56	128.41	97.28	64.21			X	X	X	X	X	X
	23.15	76	145370	175.30	115.70	87.65	57.85			X	X	X	X	X	X
	26.89	65	152220	156.99	103.61	78.50	51.81			X	X	X	X	X	X
	30.79	57	158681	143.51	94.72	71.76	47.36			X	X	X	X	X	X
	34.38	51	143813	116.37	76.81	58.19	38.40			X	X	X	X	X	X
SK 9382	35.61	49	212400	100.00	66.00	50.00	33.00			X	X	X	X	X	X
	41.93	42	212400	100.00	66.00	50.00	33.00			X	X	X	X	X	X
	48.44	36	212400	100.00	66.00	50.00	33.00			X	X	X	X	X	X
	55.49	32	212400	100.00	66.00	50.00	33.00			X	X	X	X	X	X
	65.25	27	214701	91.98	60.71	45.99	30.35			X	X	X	X	X	X
	72.19	24	212400	80.88	53.38	40.44	26.69			X	X	X	X	X	X
	83.19	21	212400	70.77	46.71	35.39	23.35			X	X	X	X	X	X*
	100.89	17	224790	60.63	40.02	30.32	20.01			X	X	X	X	X	X*
	115.57	15	224790	53.50	35.31	26.75	17.66			X	X	X	X	X	X*
	135.90	13	224790	46.37	30.60	23.18	15.30			X	X	X	X	X*	X*
	144.69	12	212400	40.44	26.69	20.22	13.35			X	X	X	X		
	175.05	10	224790	35.67	23.54	17.83	11.77			X	X	X	X		
	204.68	8.5	194700	26.26	17.33	13.13	8.67			X	X	X	X*		
	291.25	6.0	212400	20.22	13.35	10.11	6.67			X	X	X	X*		
	352.36	5.0	224790	17.83	11.77	8.92	5.89			X	X	X*	X*		
SK 9382/42	449.57	3.9	212400	10.00	6.60	5.00	3.30	X	X	X	X	X*			
	618.30	2.8	212400	9.44	6.23	4.72	3.11	X	X	X	X*	X*			
	715.38	2.4	212400	8.09	5.34	4.04	2.67	X	X	X	X*	X*			
	886.49	2.0	212400	6.74	4.45	3.37	2.22	X	X	X	X*	X*			
	1178.81	1.5	212400	5.06	3.34	2.53	1.67	X	X	X	X*	X*			
	1419.20	1.2	212400	4.04	2.67	2.02	1.33	X	X	X*	X*	X*			
	1747.42	1.0	212400	3.37	2.22	1.69	1.11	X	X	X*	X*	X*			
	2203.92	0.79	212400	2.66	1.76	1.33	0.88	X	X	X*	X*				
	2435.06	0.72	212400	2.43	1.60	1.21	0.80	X	X	X*	X*				
	4165.75	0.42	212400	1.42	0.93	0.71	0.47			X*	X*				
SK 9382/52	200.69	8.7	212400	25.00	16.50	12.50	8.25					X	X*		
	233.17	7.5	212400	25.00	16.50	12.50	8.25					X	X*		
	294.54	5.9	212400	19.88	13.12	9.94	6.56			X	X	X*	X*		
	411.63	4.3	212400	14.49	9.56	7.25	4.78			X	X	X*	X*		

* Caution - The motor power may exceed the gear unit's mechanical torque capacity
◈ The mechanical power limit of the solid input shaft type "W" may limit the reducer rating.
All ratings are mechanical. See page 14 for thermal considerations.

lb	W	56C	140TC	180TC	210TC	250TC	280TC	320TC	360TC
SK 9282	1724	–	–	1604	1604	1618	1618	1680	1801
SK 9382	1570	–	–	1615	1615	1629	1629	1691	1812
SK 9382/42	1625	1614	1629	1629	1660	–	–	–	–
SK 9382/52	1689	–	–	1693	1724	1746	1746	–	–

Send Quote Requests to info@automatedpt.com
Call +1(800)985-6929 To Order or Order Online At Nordgearmotors.com

SK 10282, SK 10382
SK 10382/52 NEMA-C + W
Ratings & Combinations

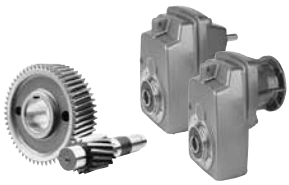

DRIVESYSTEMS

Model Type	Gear Ratio	Output Speed	Output Torque*	Maximum input power◈ Solid input shafts type "W"				NEMA C-Face* Available Combinations							
				Input Speed											
	i_{tot}	n_2 1750 rpm	$T_{2\,max}$	1750 rpm	1150 rpm	875 rpm	580 rpm								
		[rpm]	[lb-in]	[hp]	[hp]	[hp]	[hp]	56C	140TC	180TC	210TC	250TC	280TC	320TC	360TC
SK 10282	5.20	337	168150	200.00	132.00	100.00	66.00								X
	5.80	302	168150	200.00	132.00	100.00	66.00								X
	6.74	260	168150	200.00	132.00	100.00	66.00								X
	7.58	231	168150	200.00	132.00	100.00	66.00								X
	8.24	212	265500	200.00	132.00	100.00	66.00								X
	9.20	190	265500	200.00	132.00	100.00	66.00								X
	10.42	168	283200	200.00	132.00	100.00	66.00								X
	11.63	150	283200	200.00	132.00	100.00	66.00								X
	13.50	130	283200	200.00	132.00	100.00	66.00								X
	15.19	115	283200	200.00	132.00	100.00	66.00								X
	18.24	96	283200	200.00	132.00	100.00	66.00								X
SK 10382	21.00	83	292050	200.00	132.00	100.00	66.00					X	X	X	X
	23.58	74	292050	200.00	132.00	100.00	66.00					X	X	X	X
	27.18	64	292050	200.00	132.00	100.00	66.00					X	X	X	X
	29.79	59	309750	200.00	132.00	100.00	66.00					X	X	X	X
	34.35	51	309750	200.00	132.00	100.00	66.00					X	X	X	X
	41.00	43	309750	200.00	132.00	100.00	66.00					X	X	X	X
	47.95	36	309750	176.93	116.77	88.47	58.39					X	X	X	X
	56.76	31	309750	152.36	100.56	76.18	50.28					X	X	X	X
	65.44	27	310635	133.08	87.83	66.54	43.92					X	X	X	X
	72.71	24	329220	125.37	82.74	62.68	41.37					X	X	X	X
	91.35	19	313113	94.39	62.30	47.20	31.15					X	X	X	X
	104.71	17	312405	84.27	55.62	42.13	27.81					X	X	X	X
	140.41	12	313998	59.79	39.46	29.89	19.73					X	X	X	
	168.16	10	309750	49.15	32.44	24.57	16.22					X	X		
	180.68	9.7	309750	47.67	31.46	23.84	15.73					X	X		
	263.25	6.6	292050	30.58	20.19	15.29	10.09					X	X		
	282.85	6.2	292050	28.73	18.96	14.37	9.48					X	X*		
	332.64	5.3	327450	27.54	18.17	13.77	9.09					X	X*		
	357.40	4.9	313821	24.40	16.10	12.20	8.05					X	X*		
SK 10382/52	301.68	5.8	309750	28.51	18.81	14.25	9.41			X	X	X	X*		
	366.46	4.8	309750	23.59	15.57	11.80	7.78	X	X	X	X	X	X*		
	475.75	3.7	309750	18.18	12.00	9.09	6.00			X	X	X*	X*		
	577.84	3.0	309750	14.74	9.73	7.37	4.87	X	X	X	X	X*	X*		
	692.36	2.5	309750	12.29	8.11	6.14	4.05	X	X	X	X	X*	X*		
	916.16	1.9	309750	9.34	6.16	4.67	3.08	X	X	X	X*	X*	X*		
	1165.49	1.5	309750	7.37	4.87	3.69	2.43	X	X	X	X*	X*	X*		
	1418.74	1.2	309750	5.90	3.89	2.95	1.95	X	X	X	X*	X*	X*		
	1887.94	0.93	309750	4.57	3.02	2.29	1.51			X*	X*				
	2401.00	0.73	309750	3.59	2.37	1.79	1.18			X*	X*				
	2795.70	0.63	309750	3.10	2.04	1.55	1.02			X*	X*		X*		
	3521.33	0.50	309750	2.46	1.62	1.23	0.81			X*	X*		X*		
	4671.76	0.37	309750	1.82	1.20	0.91	0.60	X	X*	X*					

* Caution - The motor power may exceed the gear unit's mechanical torque capacity
◈ The mechanical power limit of the solid input shaft type "W" may limit the reducer rating.
All ratings are mechanical. See page 14 for thermal considerations.

lb	W	56C	140TC	180TC	210TC	250TC	280TC	320TC	360TC
SK 10282	2824	–	–	–	–	–	–	–	3177
SK 10382	2879	–	–	2870	2870	2901	2901	3056	3231
SK 10382/52	2932	2921	2937	2967	2967	2989	2989	–	–

Send Quote Requests to info@automatedpt.com
Call +1(800)985-6929 To Order or Order Online At Nordgearmotors.com

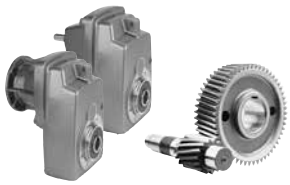

SK 11282 , SK 11382, SK 11382/52
SK 12382 NEMA-C + W
Ratings & Combinations

Model Type	Gear Ratio	Output Speed	Output Torque*	Maximum input power◈ Solid input shafts type "W"				NEMA C-Face* Available Combinations							
				Input Speed											
	i_{tot}	n_2 1750 rpm	$T_{2\,max}$	1750 rpm	1150 rpm	875 rpm	580 rpm								
		[rpm]	[lb-in]	[hp]	[hp]	[hp]	[hp]	56C	140TC	180TC	210TC	250TC	280TC	320TC	360TC
SK 11282	7.67	228	212400	200.00	132.00	100.00	66.00								X
	8.58	204	219480	200.00	132.00	100.00	66.00								X
	10.05	174	230100	200.00	132.00	100.00	66.00								X
	11.96	146	232755	200.00	132.00	100.00	66.00								X
	14.04	125	235410	200.00	132.00	100.00	66.00								X
	16.33	107	371700	200.00	132.00	100.00	66.00								X
	18.27	96	371700	200.00	132.00	100.00	66.00								X
	21.42	82	371700	200.00	132.00	100.00	66.00								X
	25.47	69	371700	200.00	132.00	100.00	66.00								X
	29.92	58	371700	200.00	132.00	100.00	66.00								X
	34.85	50	371700	200.00	132.00	100.00	66.00								X
SK 11382	31.96	55	531000	200.00	132.00	100.00	66.00					X	X	X	X
	38.21	46	531000	200.00	132.00	100.00	66.00					X	X	X	X
	46.64	38	531000	200.00	132.00	100.00	66.00					X	X	X	X
	54.26	32	531000	200.00	132.00	100.00	66.00					X	X	X	X
	63.44	28	531000	200.00	132.00	100.00	66.00					X	X	X	X
	77.01	23	550028	200.00	132.00	100.00	66.00					X	X	X	X
	92.07	19	578790	174.49	115.16	87.24	57.58					X	X	X	X
	112.38	16	610650	155.02	102.32	77.51	51.16					X	X	X	X
	130.73	13	610650	125.96	83.13	62.98	41.57					X	X	X	X
	152.87	11	610650	106.58	70.34	53.29	35.17					X	X	X	X
	171.96	10	610650	96.89	63.95	48.45	31.97					X	X	X	X
	224.76	7.8	610650	75.57	49.88	37.79	24.94					X	X	X	X
SK 11382/52	297.39	5.9	442500	30.00	19.80	15.00	9.90					X	X		
	312.46	5.6	442500	30.00	19.80	15.00	9.90					X	X		
	363.43	4.8	442500	30.00	19.80	15.00	9.90					X	X		
	479.78	3.6	531000	30.00	19.80	15.00	9.90					X	X		
	602.67	2.9	531000	24.43	16.13	12.22	8.06			X	X	X	X*		
	732.09	2.4	531000	20.22	13.35	10.11	6.67	X	X	X	X	X	X*		
	962.98	1.8	531000	15.17	10.01	7.58	5.00	X	X	X	X	X*	X*		
	1154.35	1.5	531000	12.64	8.34	6.32	4.17	X	X	X	X	X*	X*		
	1383.12	1.3	531000	10.95	7.23	5.48	3.61	X	X	X	X	X*	X*		
	1830.22	0.96	531000	8.09	5.34	4.04	2.67	X	X	X	X*	X*	X*		
	2323.30	0.75	531000	6.32	4.17	3.16	2.09	X	X	X	X*	X*	X*		
	3062.61	0.57	531000	4.80	3.17	2.40	1.58	X	X	X*	X*	X*	X*		
	3728.09	0.47	531000	3.96	2.61	1.98	1.31	X	X	X*	X*	X*	X*		
	4001.51	0.44	531000	3.71	2.45	1.85	1.22	X	X	X*	X*				
SK 12382	69.12	25	796500	200.00	132.00	100.00	66.00					X	X	X	X
	82.65	21	796500	200.00	132.00	100.00	66.00					X	X	X	X
	100.88	17	796500	200.00	132.00	100.00	66.00					X	X	X	X
	117.35	15	796500	189.57	125.12	94.78	62.56					X	X	X	X
	137.22	13	796500	164.29	108.43	82.15	54.22					X	X	X	X
	154.35	11	796500	139.02	91.75	69.51	45.88					X	X	X	X
	201.75	8.7	796500	109.95	72.57	54.97	36.28					X	X	X	

* Caution - The motor power may exceed the gear unit's mechanical torque capacity
◈ The mechanical power limit of the solid input shaft type "W" may limit the reducer rating.
All ratings are mechanical. See page 14 for thermal considerations.

lb	W	56C	140TC	180TC	210TC	250TC	280TC	320TC	360TC
SK 11282	4557	–	–	–	–	–	–	–	4734
SK 11382	4727	–	–	4718	4718	4718	4718	4782	4782
SK 11382/52	4780	4769	4784	4815	4815	4837	4837	–	–
SK 12382	4727	–	–	4718	4718	4718	4749	4782	5079

Send Quote Requests to info@automatedpt.com
Call +1(800)985-6929 To Order or Order Online At Nordgearmotors.com

Notes

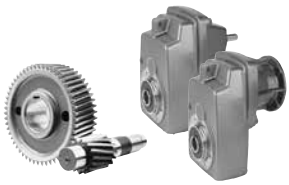

NORD DRIVESYSTEMS

NOTES

Send Quote Requests to info@automatedpt.com
Call +1(800)985-6929 To Order or Order Online At Nordgearmotors.com

Clincher™ Shaft Mount Dimensions

Dimensions

- Gearmotor
- Reducers C-Face
- Options
- Shafts

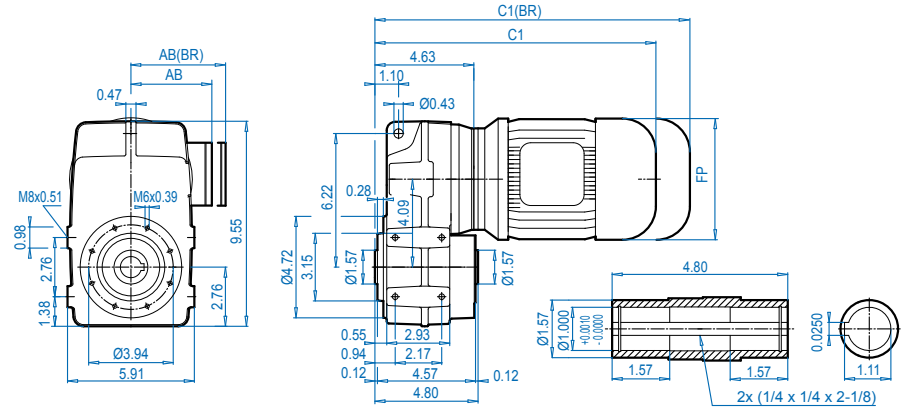

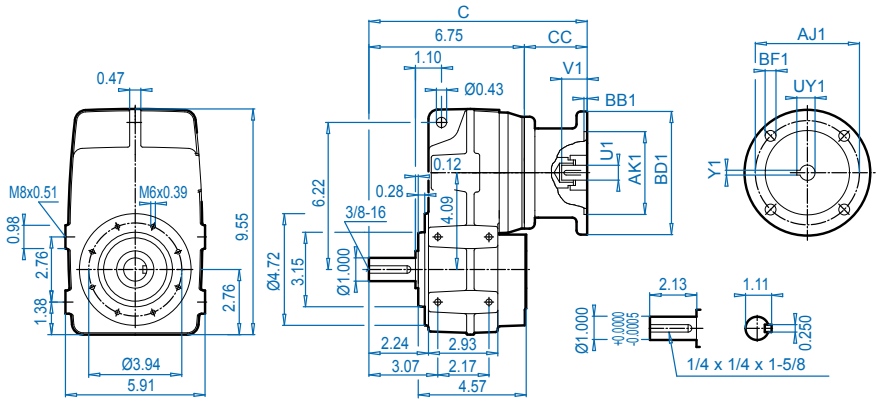

DRIVESYSTEMS

www.nord.com

UNICASE™

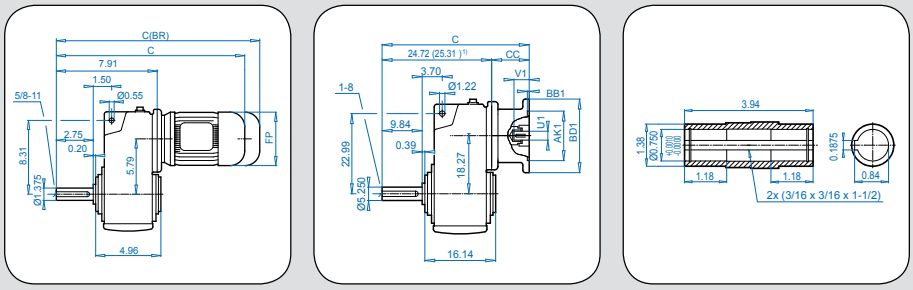

SK 0182NB + Motor



DRIVESYSTEMS

SK 0182NB/A

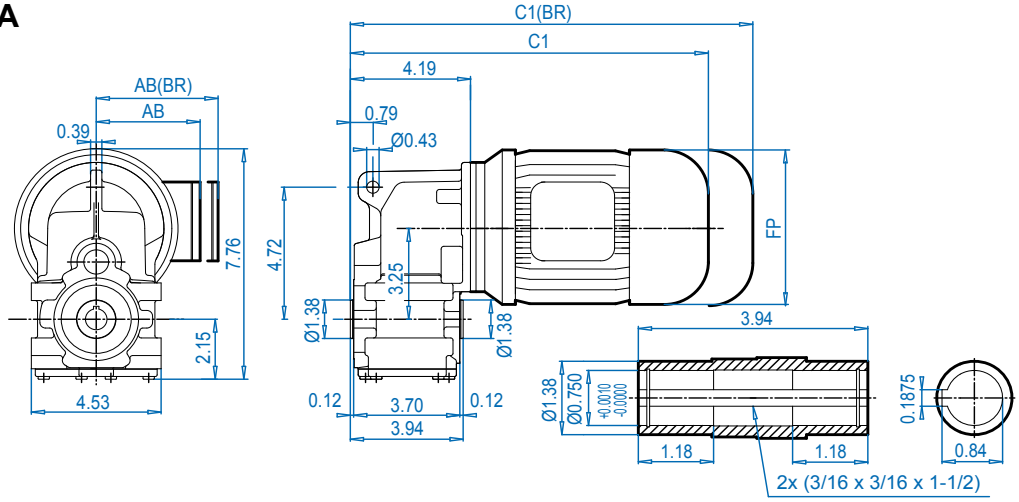

SK 0182NB/V

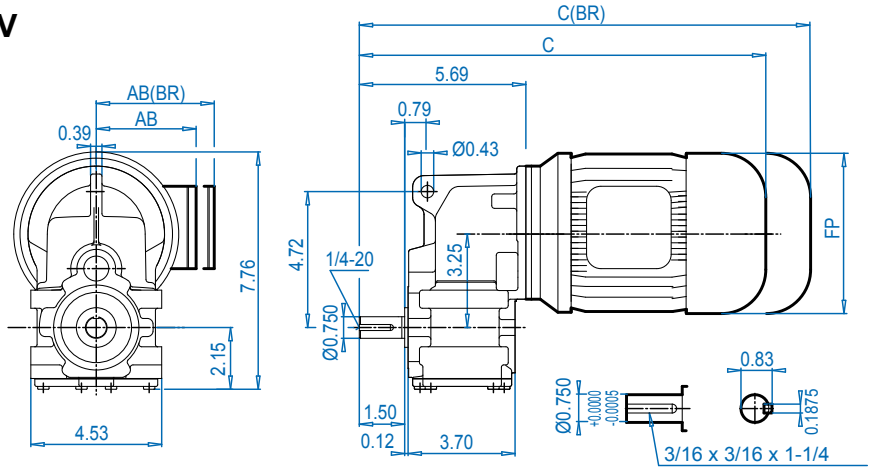

SK 0182NB/**AB**

⇨🕮 394

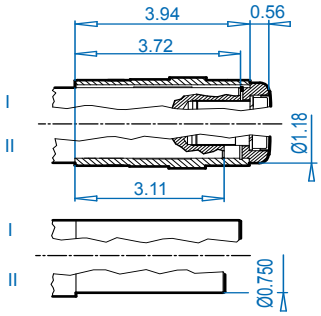

Motor dimensions

Standard efficiency	63S/L	71S/L	80S/L	90S/L			For Other Connection Possibilities please see ⇨🕮 376 & 378
Energy efficiency			80LH	90SH/LH			
AB	4.53	4.88	5.59	5.79			
AB (BR)	4.84	5.24	5.63	5.83			
C1	11.77	12.64	13.50	15.08			
C1 (BR)	13.97	14.92	16.02	18.03			
C	13.27	14.14	15.00	16.58			
C (BR)	15.47	16.42	17.52	19.53			
FP	4.84	5.43	6.14	6.92			

(BR) denotes Brakemotor

ALTERNATE SHAFTS SEE PAGES 388 - 393

Send Quote Requests to info@automatedpt.com
Call +1(800)985-6929 To Order or Order Online At Nordgearmotors.com

Send Quote Requests to info@automatedpt.com
Call +1(800)985-6929 To Order or Order Online At Nordgearmotors.com





SK 0182NB/A

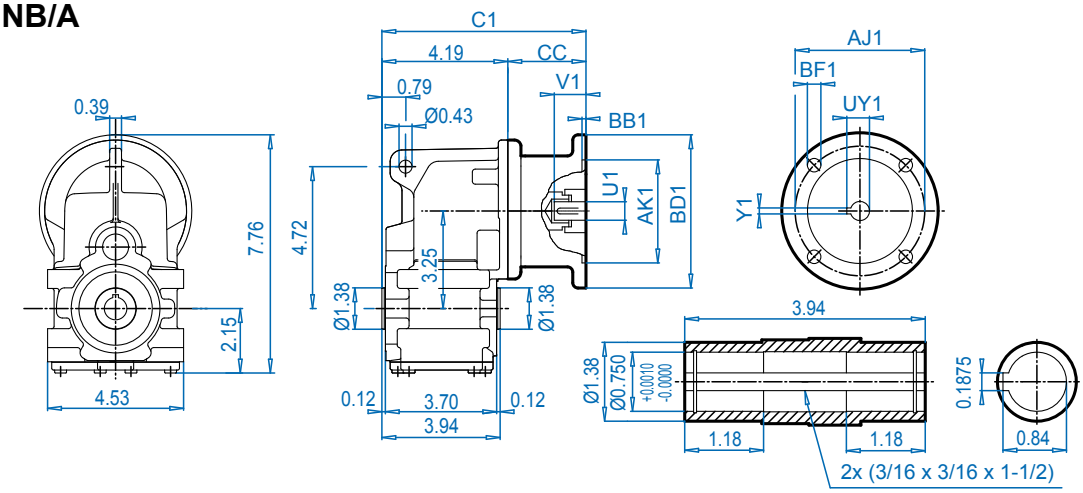

SK 0182NB/V

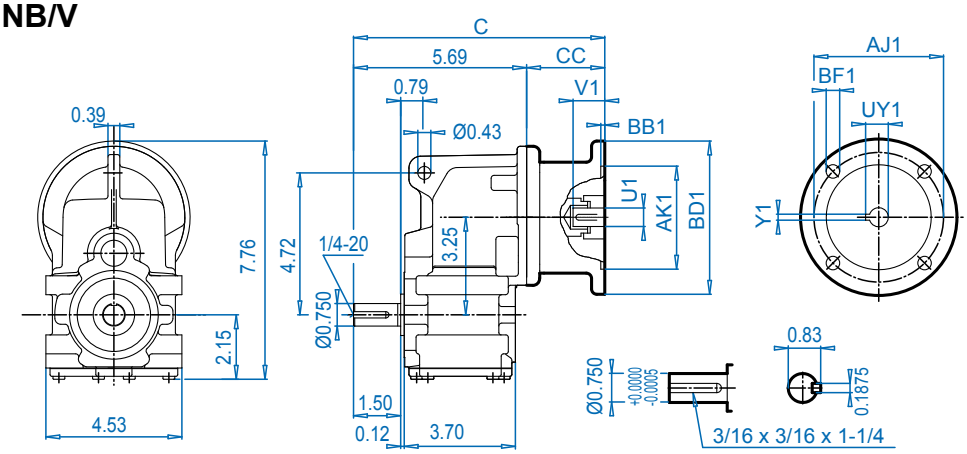

SK 0182NB/**AB**

⇨🕮 394

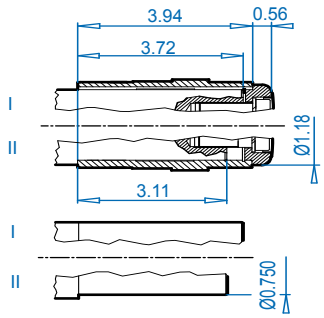

NEMA Dimensions

Type	AJ1	AK1	BB1	BD1	BF1	U1	V1	UY1	Y1	C	C1	CC
56C	5.88	4.500	0.18	6.54	0.43	0.625	2.06	0.71	0.188	10.00	8.50	4.29
140TC	5.88	4.500	0.18	6.54	0.43	0.875	2.12	0.96	0.188	10.00	8.50	4.29

Send Quote Requests to info@automatedpt.com
Call +1(800)985-6929 To Order or Order Online At Nordgearmotors.com

SK 0182NB + Motor



SK 0182NB/AF

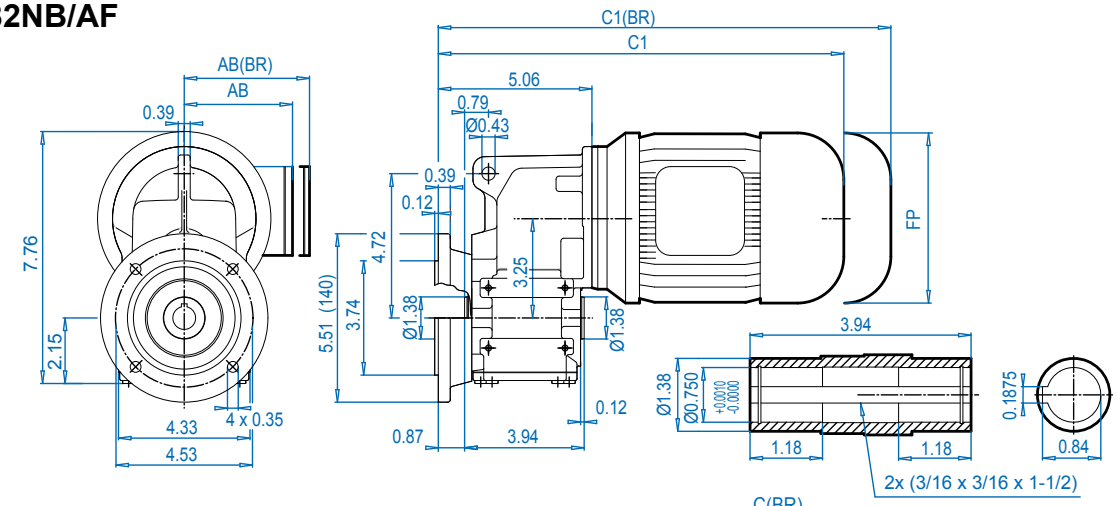

SK 0182NB/VF

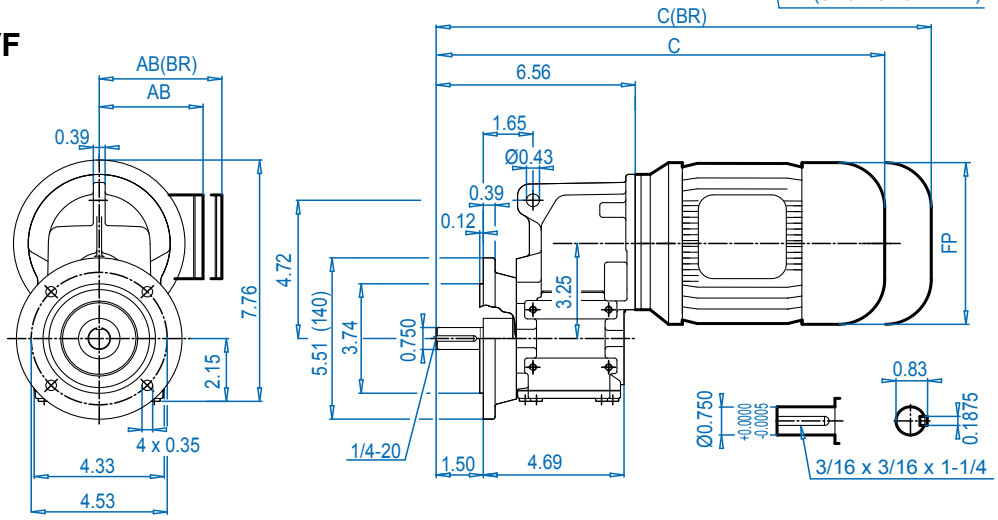

SK 0182NB/**AB**

⇨📖 394

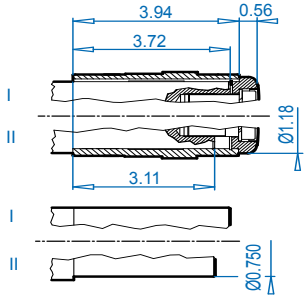

Motor dimensions

Standard efficiency	63S/L	71S/L	80S/L	90S/L			For Other Connection Possibilities please see ⇨📖 376 & 378
Energy efficiency			80LH	90SH/LH			
AB	4.53	4.88	5.59	5.79			
AB (BR)	4.84	5.24	5.63	5.83			
C1	12.64	13.51	14.37	15.95			
C1 (BR)	14.84	15.79	16.89	18.90			
C	14.14	15.01	15.87	17.45			
C (BR)	16.34	17.29	18.39	20.40			
FP	4.84	5.43	6.14	6.92			

(BR) denotes Brakemotor

Send Quote Requests to info@automatedpt.com
Call +1(800)985-6929 To Order or Order Online At Nordgearmotors.com

DRIVESYSTEMS





SK 0182NB + NEMA

SK 0182NB/AF

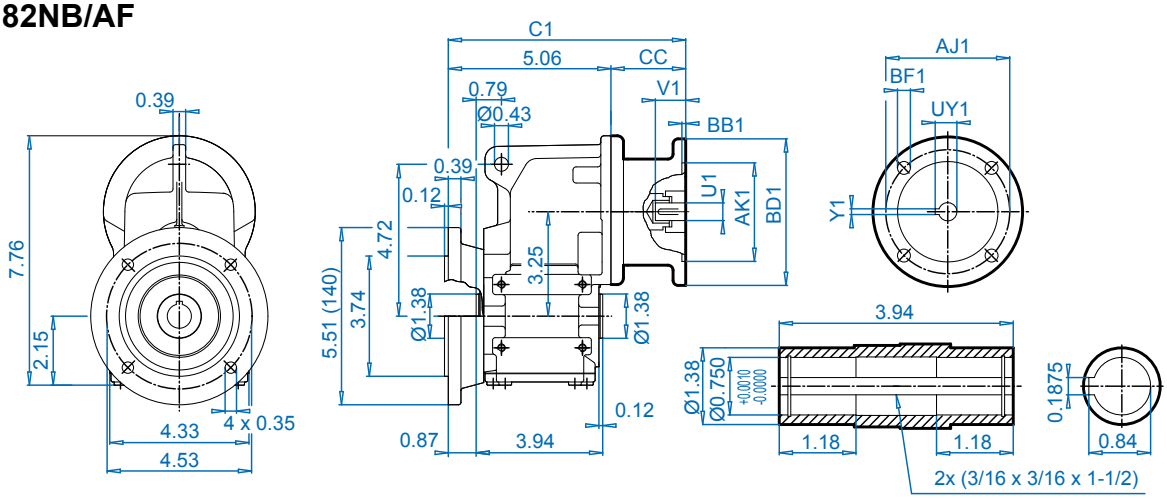

SK 0182NB/VF

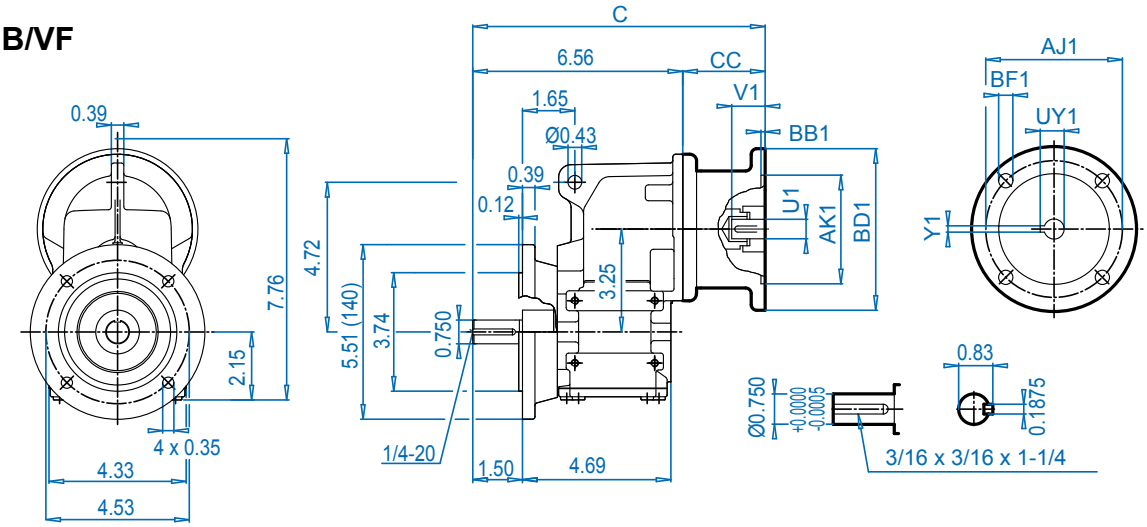

SK 0182NB/**AB**

⇨🕮 394

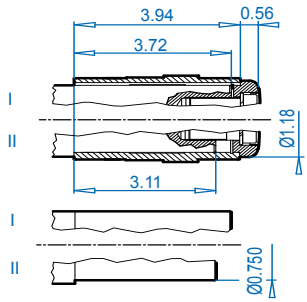

NEMA Dimensions

Type	AJ1	AK1	BB1	BD1	BF1	U1	V1	UY1	Y1	C	C1	CC
56C	5.88	4.500	0.18	6.54	0.43	0.625	2.06	0.71	0.188	10.87	9.37	4.29
140TC	5.88	4.500	0.18	6.54	0.43	0.875	2.12	0.96	0.188	10.87	9.37	4.29

Send Quote Requests to info@automatedpt.com
Call +1(800)985-6929 To Order or Order Online At Nordgearmotors.com

SK 0182NB + Motor





DRIVESYSTEMS

SK 0182NB/AZ

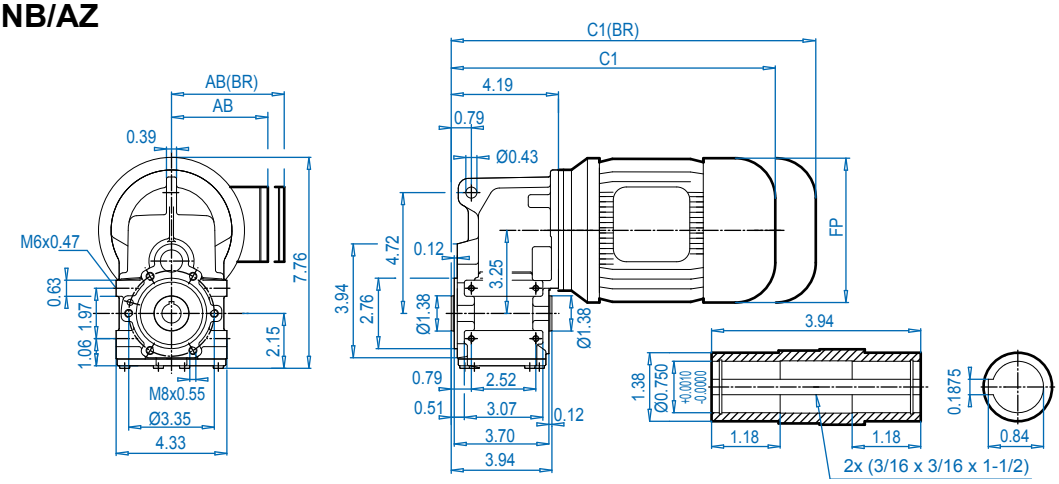

SK 0182NB/VZ

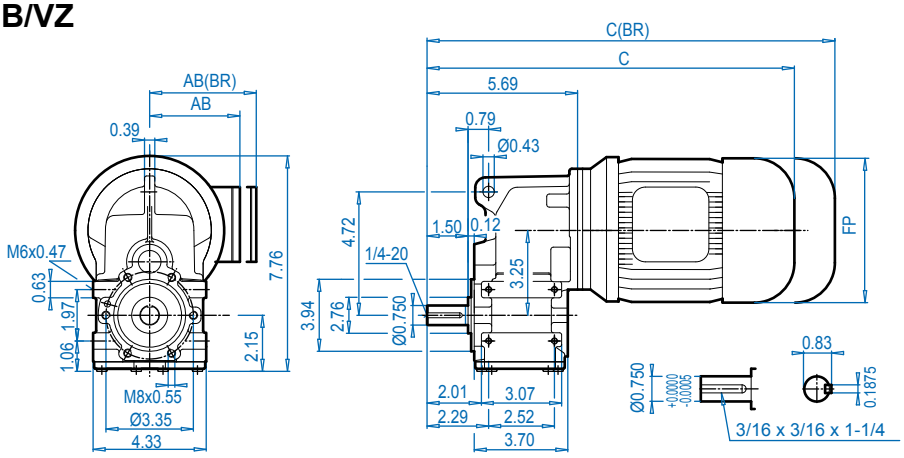

SK 0182NB/**AB**

⇨🕮 394

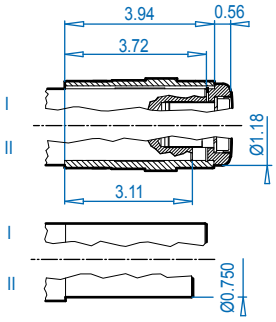

Motor dimensions

Standard efficiency	63S/L	71S/L	80S/L	90S/L			For Other Connection Possibilities please see ⇨🕮 376 & 378
Energy efficiency			80LH	90SH/LH			
AB	4.53	4.88	5.59	5.79			
AB (BR)	4.84	5.24	5.63	5.83			
C1	11.77	12.64	13.50	15.08			
C1 (BR)	13.97	14.92	16.02	18.03			
C	13.27	14.14	15.00	16.58			
C (BR)	15.47	16.42	17.52	19.53			
FP	4.84	5.43	6.14	6.92			

(BR) denotes Brakemotor

Send Quote Requests to info@automatedpt.com
Call +1(800)985-6929 To Order or Order Online At Nordgearmotors.com

DRIVESYSTEMS





SK 0182NB + NEMA

SK 0182NB/AZ

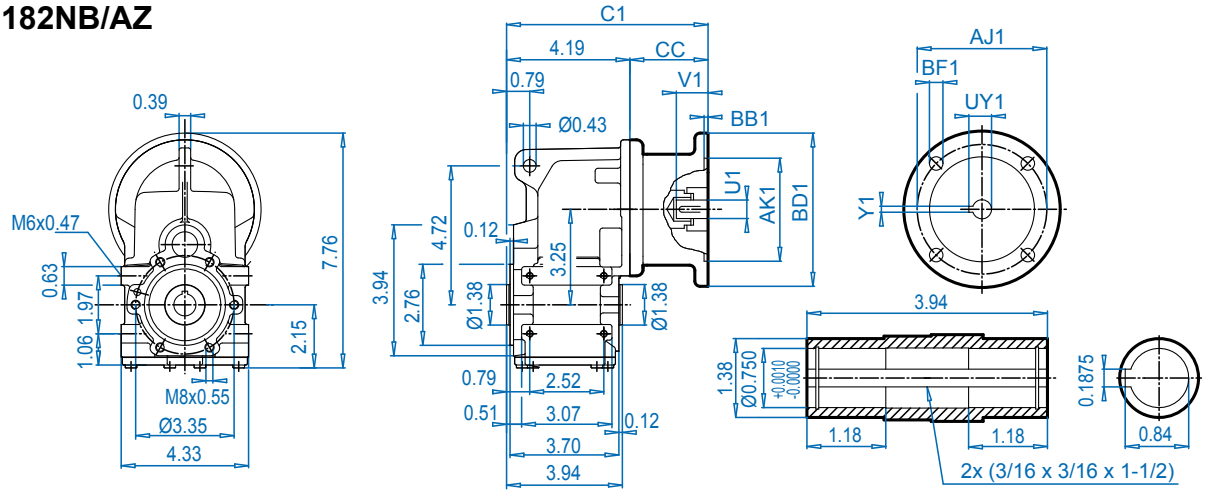

SK 0182NB/VZ

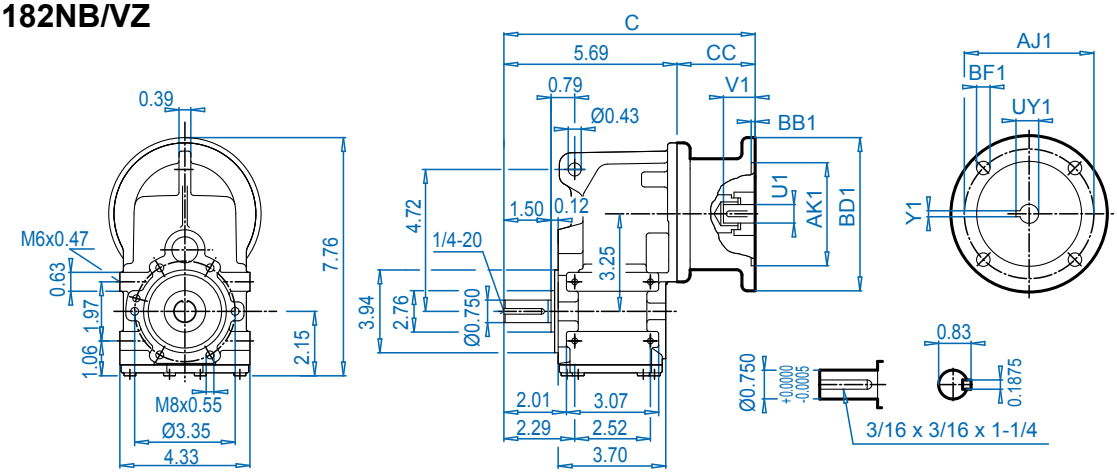

SK 0182NB/**AB**

⇨📖 394

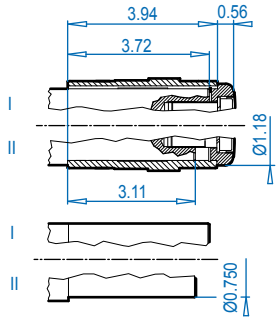

NEMA Dimensions

Type	AJ1	AK1	BB1	BD1	BF1	U1	V1	UY1	Y1	C	C1	CC
56C	5.88	4.500	0.18	6.54	0.43	0.625	2.06	0.71	0.188	10.00	8.50	4.29
140TC	5.88	4.500	0.18	6.54	0.43	0.875	2.12	0.96	0.188	10.00	8.50	4.29

Dimensions in Inches
DIMENSIONS
ALTERNATE SHAFTS SEE PAGES 388 - 393

Send Quote Requests to info@automatedpt.com
Call +1(800)985-6929 To Order or Order Online At Nordgearmotors.com

SK 0282NB + Motor





DRIVESYSTEMS

SK 0282NB/A

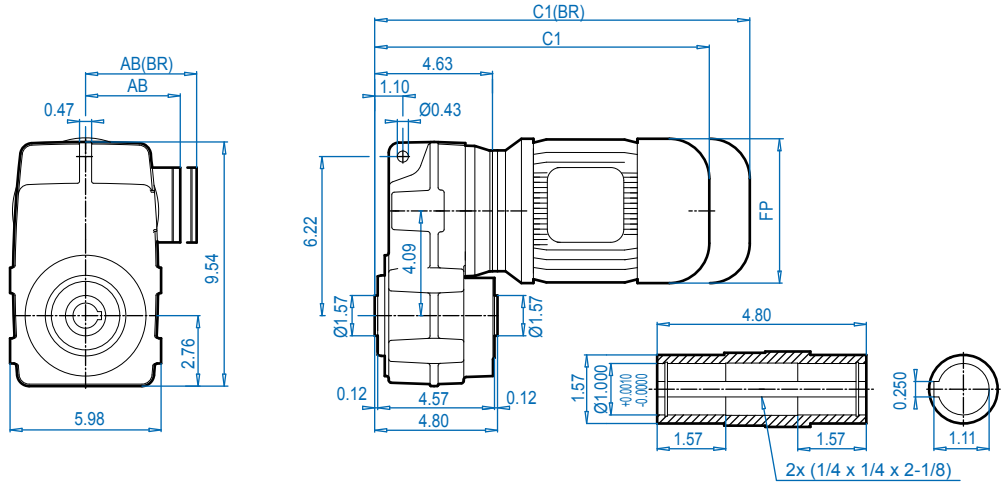

SK 0282NB/V

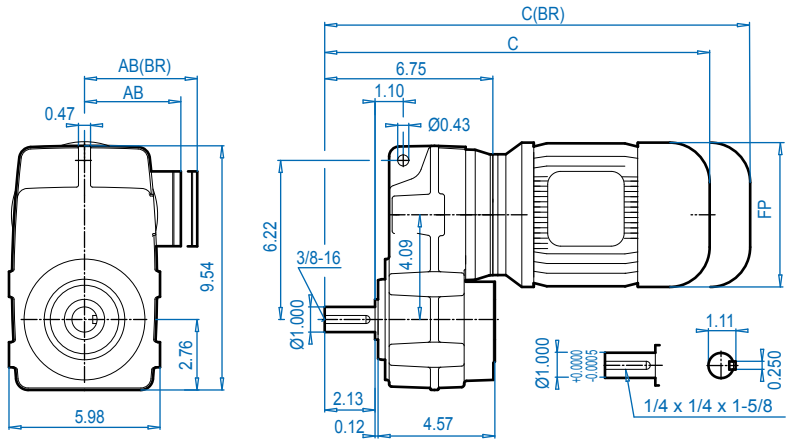

SK 0282NB/**AB**

⇨🕮 394

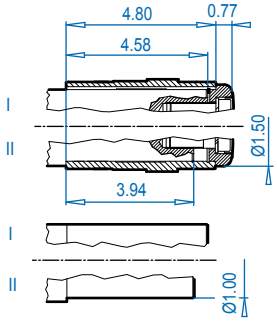

SK 0282NB/**ASH**

⇨🕮 391

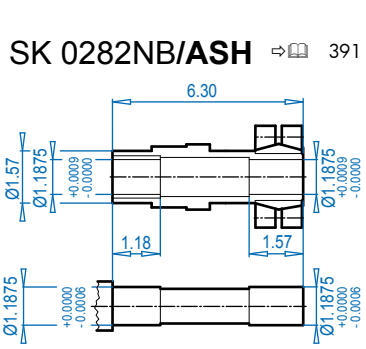

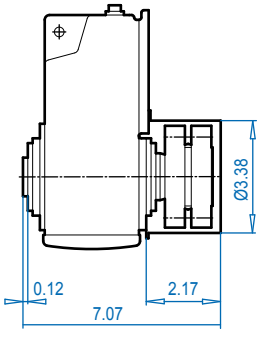

Motor dimensions

Standard efficiency	63S/L	71S/L	80S/L	90S/L			For Other Connection Possibilities please see ⇨🕮 376 & 378
Energy efficiency			80LH	90SH/LH			
AB	4.53	4.88	5.59	5.79			
AB (BR)	4.84	5.24	5.63	5.83			
C1	12.21	13.07	13.94	15.51			
C1 (BR)	14.41	15.35	16.46	18.47			
C	14.33	15.20	16.07	17.64			
C (BR)	16.54	17.48	18.59	20.59			
FP	4.84	5.43	6.14	6.92			



(BR) denotes Brakemotor

Send Quote Requests to info@automatedpt.com
Call +1(800)985-6929 To Order or Order Online At Nordgearmotors.com

DRIVESYSTEMS





SK 0282NB + NEMA

SK 0282NB/A

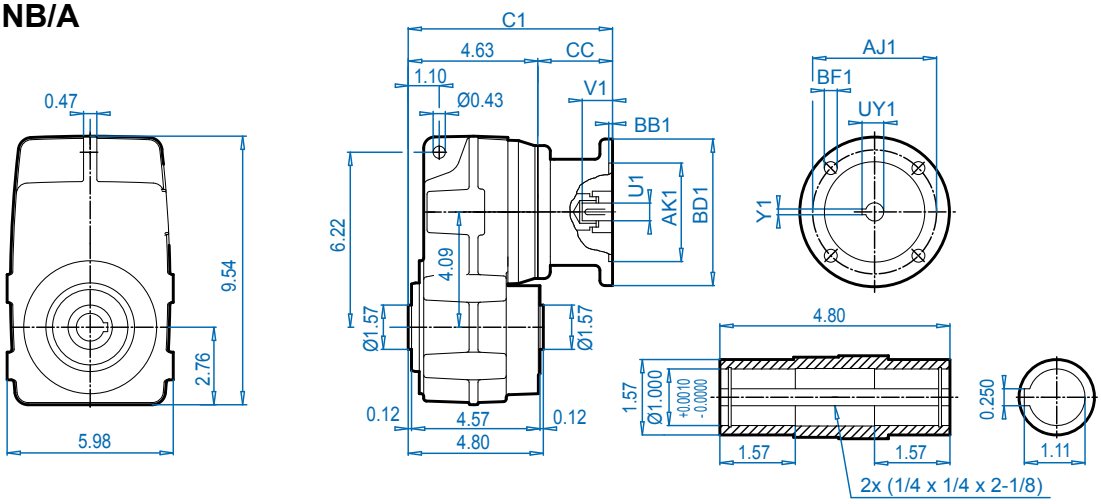

SK 0282NB/V

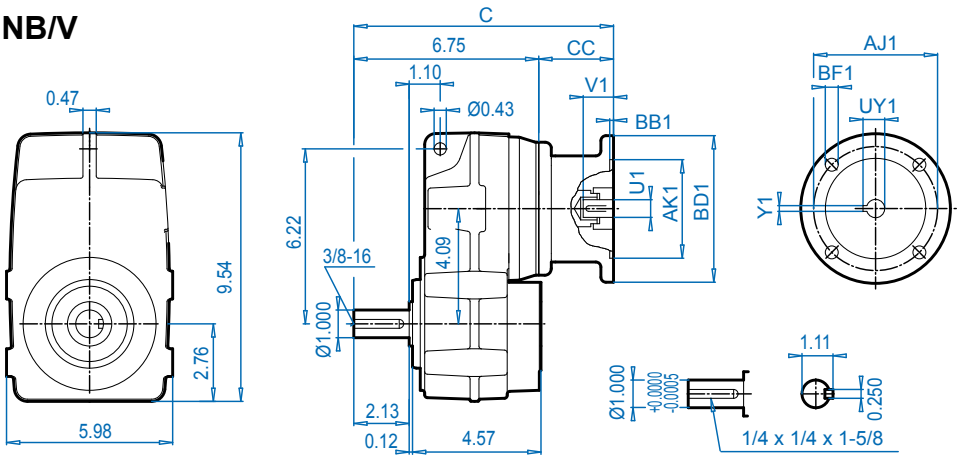

SK 0282NB/**AB**

⇨🕮 394

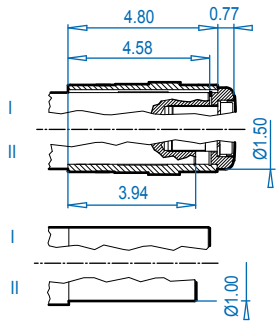

SK 0282NB/**ASH**

⇨🕮 391

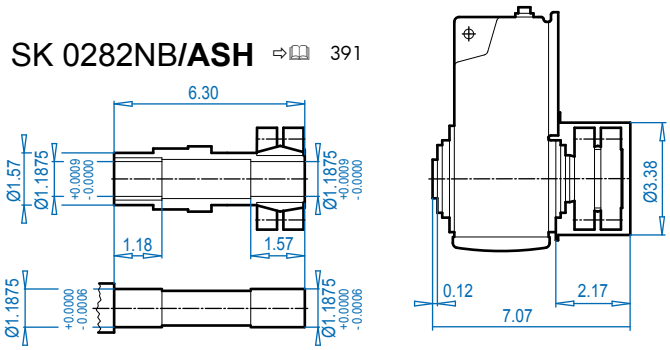

NEMA Dimensions

Type	AJ1	AK1	BB1	BD1	BF1	U1	V1	UY1	Y1	C	C1	CC
56C	5.88	4.500	0.18	6.54	0.43	0.625	2.06	0.71	0.188	11.06	8.94	4.29
140TC	5.88	4.500	0.18	6.54	0.43	0.875	2.12	0.96	0.188	11.06	8.94	4.29

Send Quote Requests to info@automatedpt.com
Call +1(800)985-6929 To Order or Order Online At Nordgearmotors.com

SK 0282 + Motor



SK 0282NB/AF

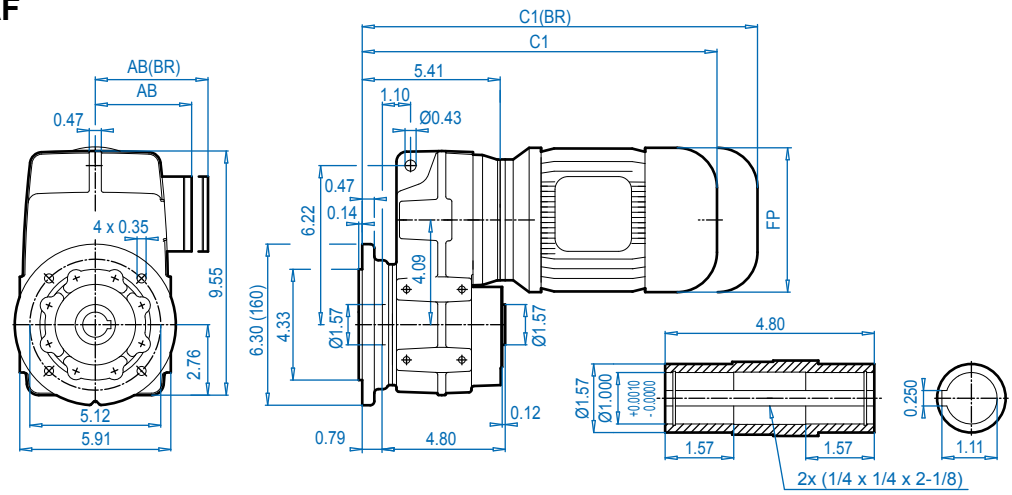

SK 0282NB/VF

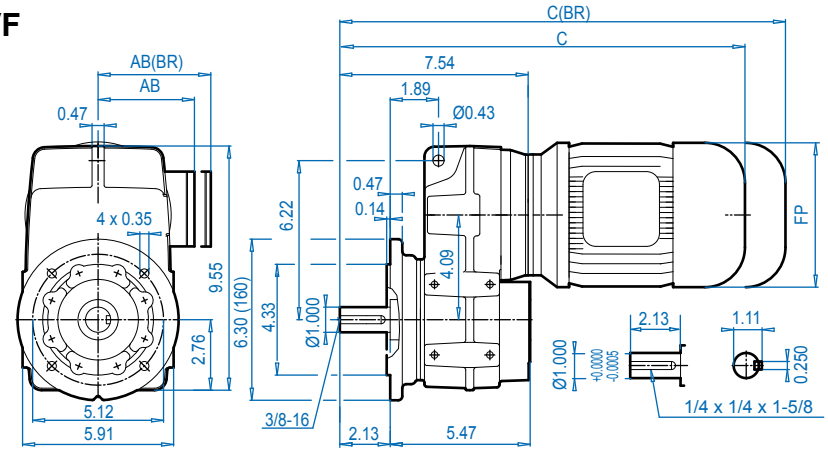

SK 0282NB/**AB**

⇨🕮 394

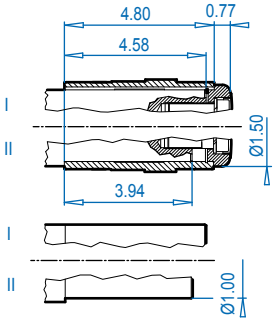

SK 0282NB/**ASH**

⇨🕮 391

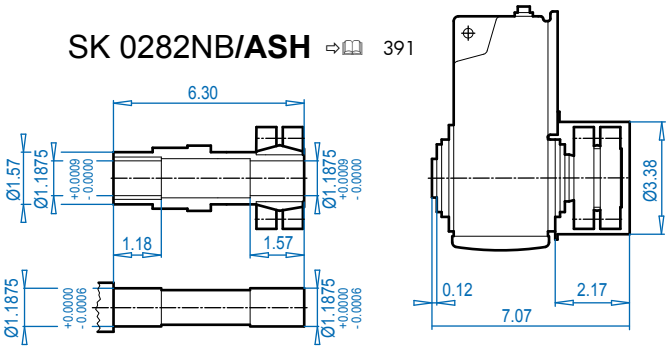

Motor dimensions

Standard efficiency	63S/L	71S/L	80S/L	90S/L			For Other Connection Possibilities please see ⇨🕮 376 & 378
Energy efficiency			80LH	90SH/LH			
AB	4.53	4.88	5.59	5.79			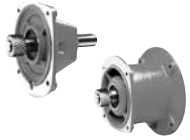
AB (BR)	4.84	5.24	5.63	5.83			
C1	12.99	13.86	14.72	16.30			
C1 (BR)	15.20	16.14	17.24	19.25			
C	15.12	15.99	16.85	18.43			
C (BR)	17.32	18.27	19.37	21.38			
FP	4.84	5.43	6.14	6.92			

(BR) denotes Brakemotor

Send Quote Requests to info@automatedpt.com
Call +1(800)985-6929 To Order or Order Online At Nordgearmotors.com

DRIVESYSTEMS





SK 0282NB + NEMA

SK 0282NB/AF

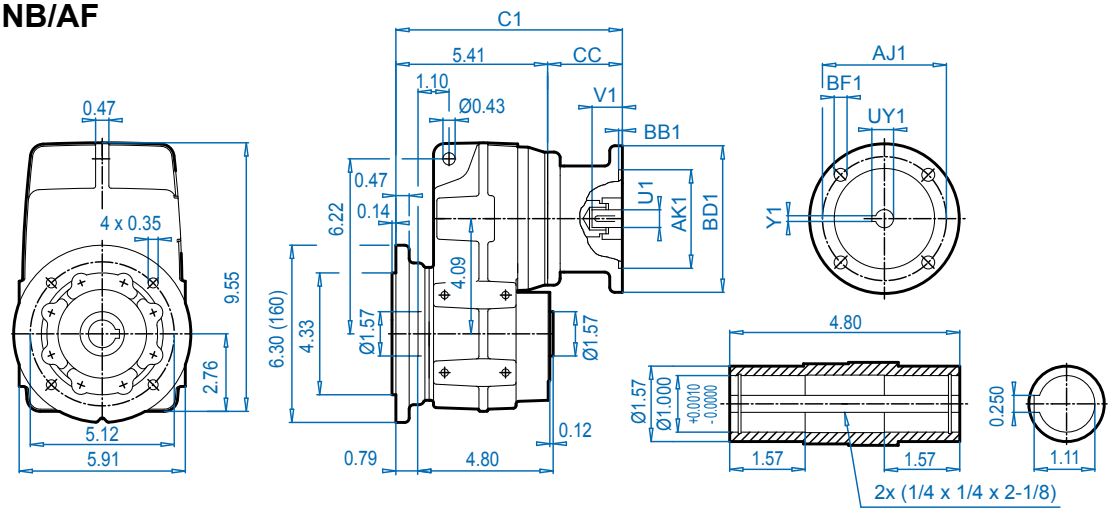

SK 0282NB/VF

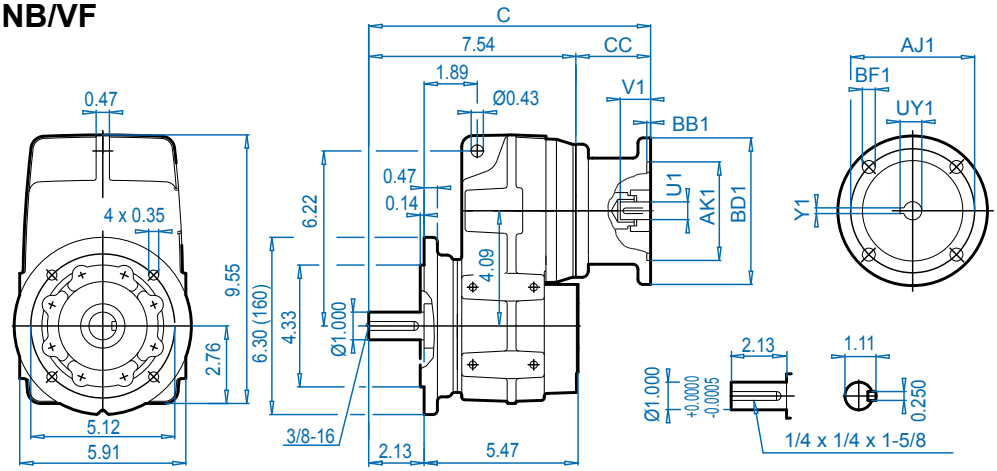

SK 0282NB/**AB**

⇨🕮 394

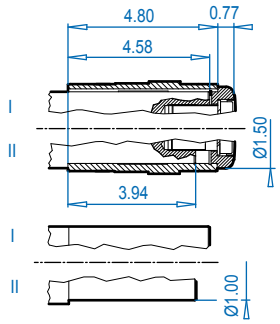

SK 0282NB/**ASH**

⇨🕮 391

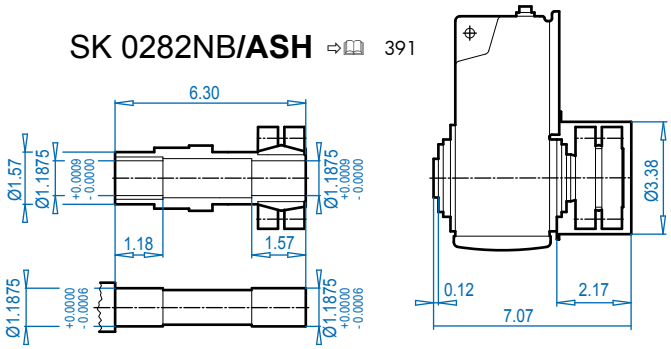

NEMA Dimensions

Type	AJ1	AK1	BB1	BD1	BF1	U1	V1	UY1	Y1	C	C1	CC
56C	5.88	4.500	0.18	6.54	0.43	0.625	2.06	0.71	0.188	11.85	9.72	4.29
140TC	5.88	4.500	0.18	6.54	0.43	0.875	2.12	0.96	0.188	11.85	9.72	4.29

Send Quote Requests to info@automatedpt.com
Call +1(800)985-6929 To Order or Order Online At Nordgearmotors.com

SK 0282NB + Motor





DRIVESYSTEMS

SK 0282NB/AZ

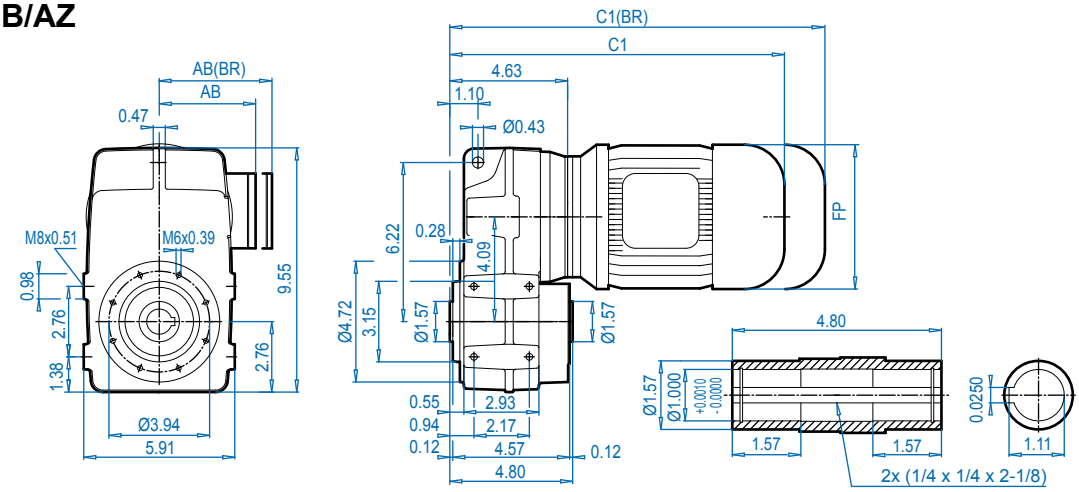

SK 0282NB/VZ

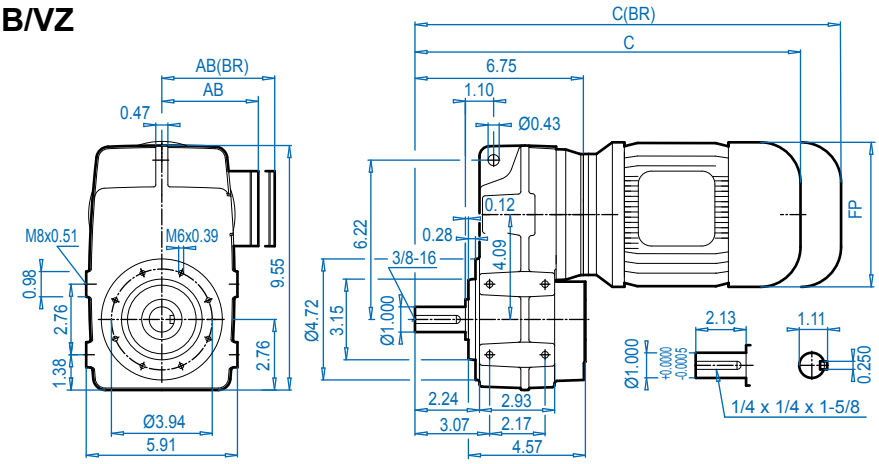

SK 0282NB/**AB**

⇨🕮 394

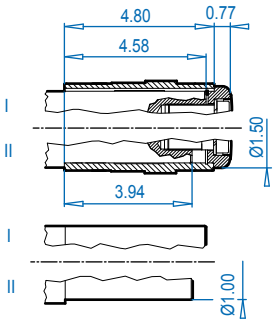

SK 0282NB/**ASH**

⇨🕮 391

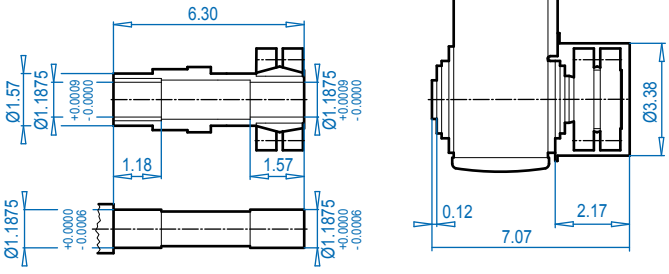

Motor dimensions

Standard efficiency	63S/L	71S/L	80S/L	90S/L			For Other Connection Possibilities please see ⇨🕮 376 & 378
Energy efficiency			80LH	90SH/LH			
AB	4.53	4.88	5.59	5.79			
AB (BR)	4.84	5.24	5.63	5.83			
C1	12.21	13.07	13.94	15.51			
C1 (BR)	14.41	15.35	16.46	18.47			
C	14.33	15.20	16.07	17.64			
C (BR)	16.54	17.48	18.59	20.59			
FP	4.84	5.43	6.14	6.92			

(BR) denotes Brakemotor

ALTERNATE SHAFTS SEE PAGES 388 - 393

Send Quote Requests to info@automatedpt.com
Call +1(800)985-6929 To Order or Order Online At Nordgearmotors.com

DRIVESYSTEMS





SK 0282NB + NEMA

SK 0282NB/AZ

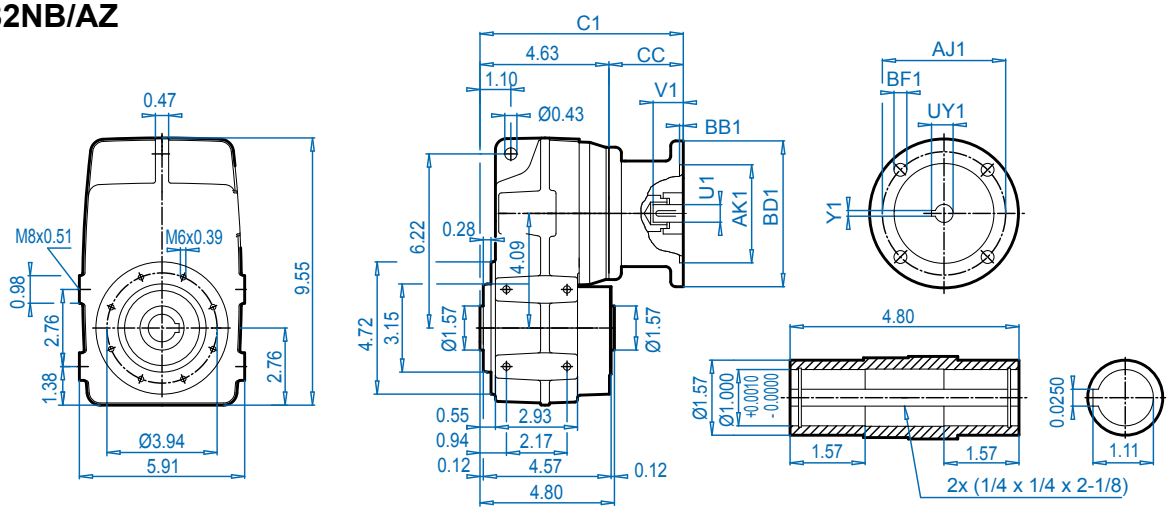

SK 0282NB/VZ

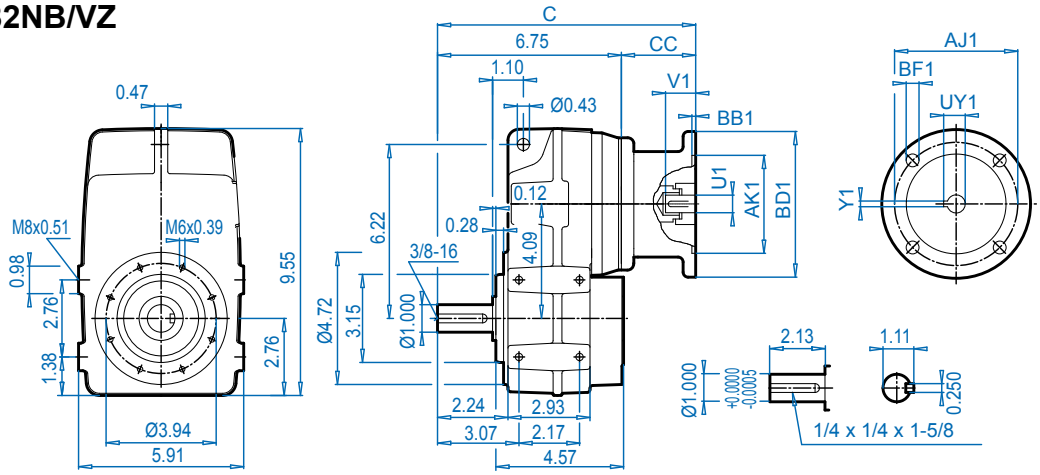

SK 0282NB/**AB**

⇨🕮 394

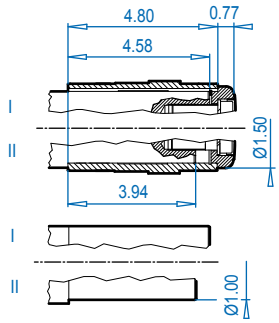

SK 0282NB/**ASH** ⇨🕮 391

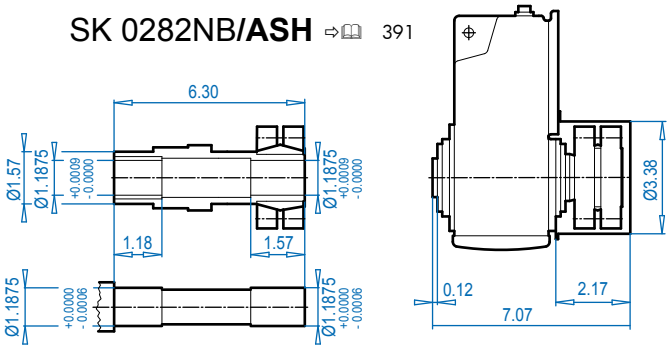

NEMA Dimensions

Type	AJ1	AK1	BB1	BD1	BF1	U1	V1	UY1	Y1	C	C1	CC
56C	5.88	4.500	0.18	6.54	0.43	0.625	2.06	0.71	0.188	11.06	8.94	4.29
140TC	5.88	4.500	0.18	6.54	0.43	0.875	2.12	0.96	0.188	11.06	8.94	4.29

©1999 - Subject to Change Without Notice
Send Quote Requests to info@automatedpt.com
Call +1(800)985-6929 To Order or Order Online At Nordgearmotors.com

SK 1382NB + Motor



DRIVESYSTEMS

SK 1382NB/A

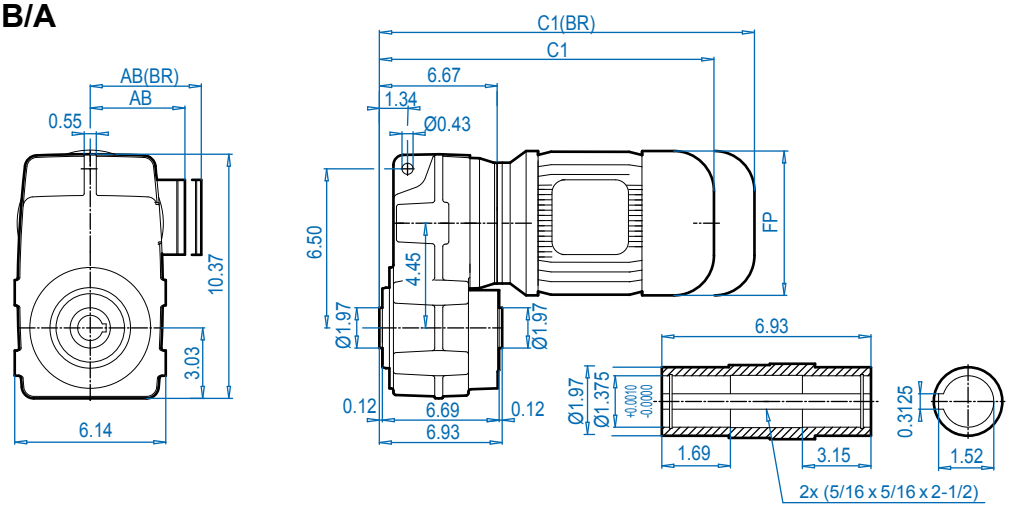

SK 1382NB/V

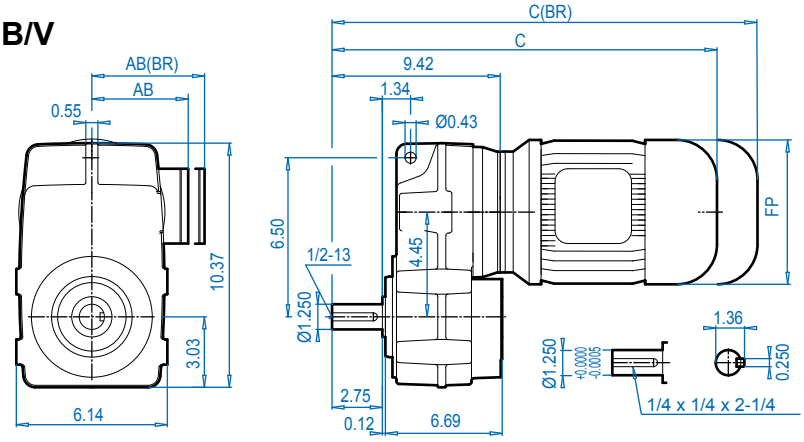

SK 1382NB/**AB**

⇨🕮 394

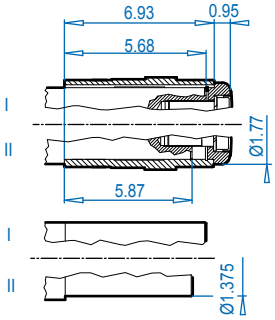

SK 1382**NB/ASH** ⇨🕮 391

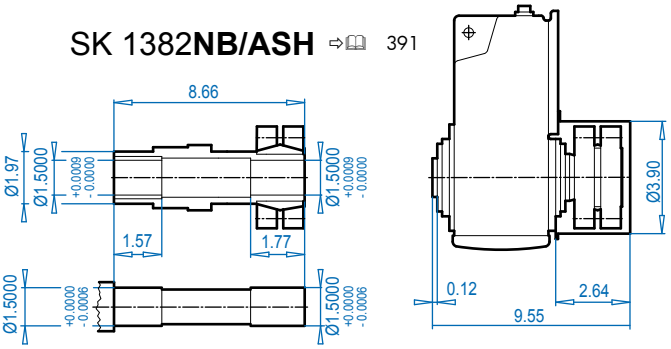

Motor dimensions

Standard efficiency	63S/L	71S/L	80S/L	90S/L	100L		For Other Connection Possibilities please see ⇨🕮 376 & 378
Energy efficiency			80LH	90SH/LH	100LH		
AB	4.53	4.88	5.59	5.79	6.65		
AB (BR)	4.84	5.24	5.63	5.83	6.26		
C1	14.13	15.00	15.87	17.44	18.62		
C1 (BR)	16.34	17.28	18.39	20.39	22.21		
C	16.89	17.75	18.62	20.19	21.37		
C (BR)	19.09	20.04	21.14	23.15	24.96		
FP	4.84	5.43	6.14	6.92	7.63		

(BR) denotes Brakemotor

ALTERNATE SHAFTS SEE PAGES 388 - 393

Send Quote Requests to info@automatedpt.com
Call +1(800)985-6929 To Order or Order Online At Nordgearmotors.com

DRIVESYSTEMS





SK 1382NB + NEMA

SK 1382NB/A

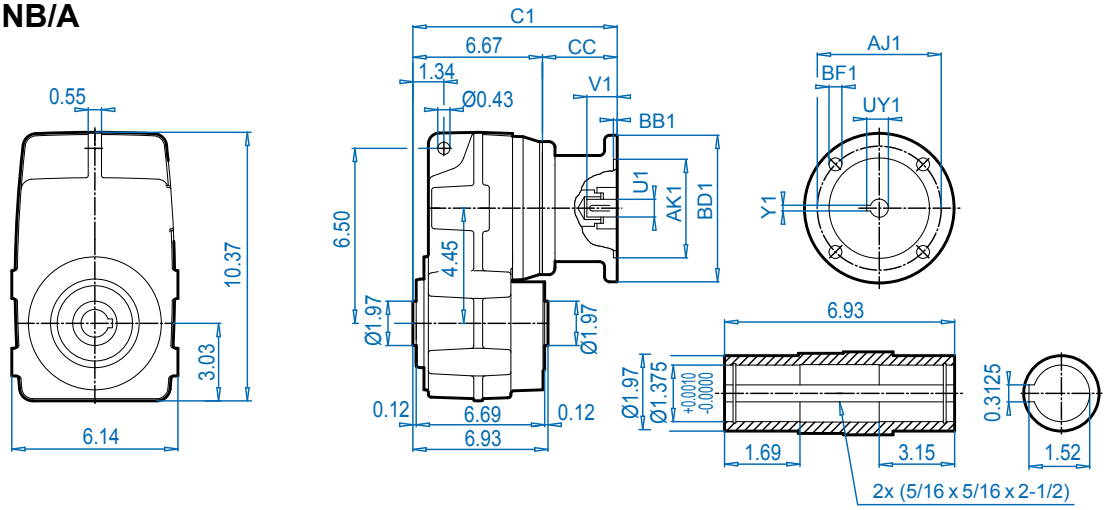

SK 1382NB/V

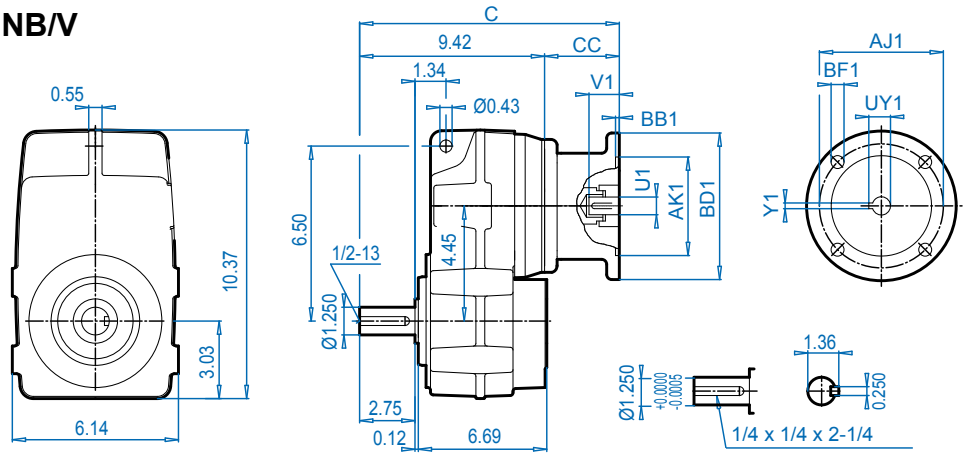

SK 1382NB/AB

⇨📖 394

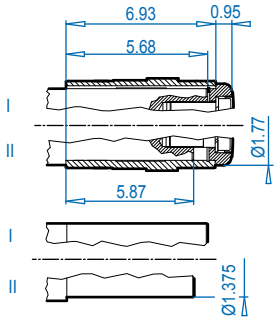

SK 1382NB/ASH

⇨📖 391

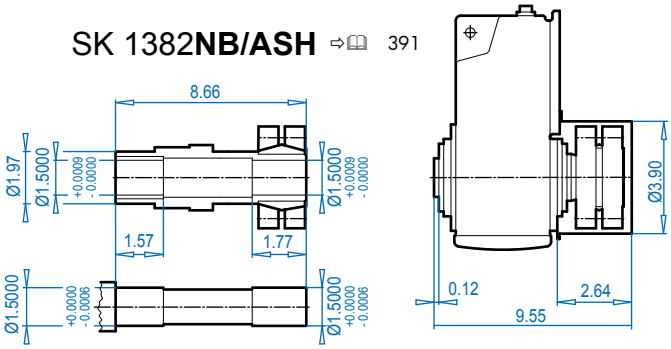

NEMA Dimensions

Type	AJ1	AK1	BB1	BD1	BF1	U1	V1	UY1	Y1	C	C1	CC
56C	5.88	4.500	0.18	6.54	0.43	0.625	2.06	0.71	0.188	13.62	10.87	4.29
140TC	5.88	4.500	0.18	6.54	0.43	0.875	2.12	0.96	0.188	13.62	10.87	4.29
180TC	7.25	8.500	0.23	9.17	0.59	1.125	2.62	1.24	0.250	14.84	12.09	5.51

Send Quote Requests to info@automatedpt.com
Call +1(800)985-6929 To Order or Order Online At Nordgearmotors.com

SK 1382NB + Motor



DRIVESYSTEMS

SK 1382NB/AF

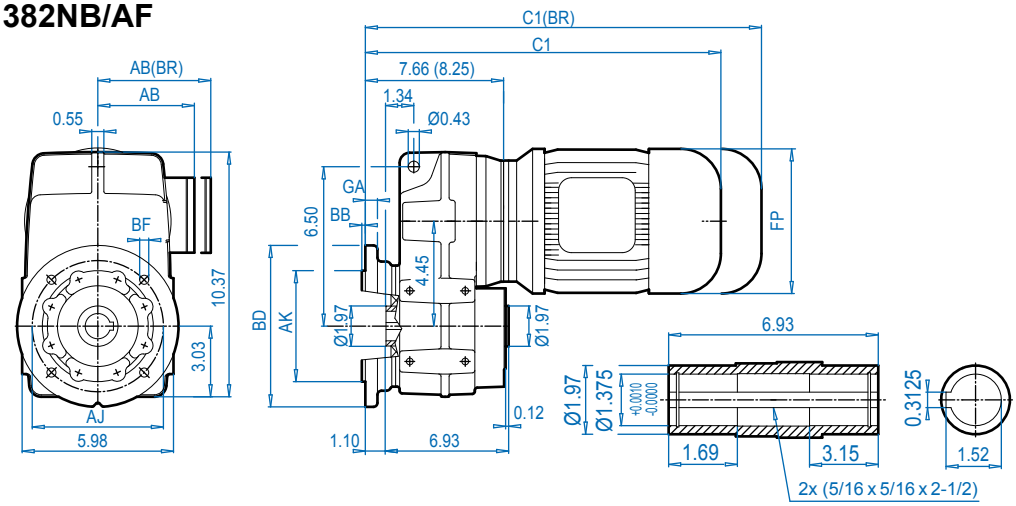

SK 1382NB/VF

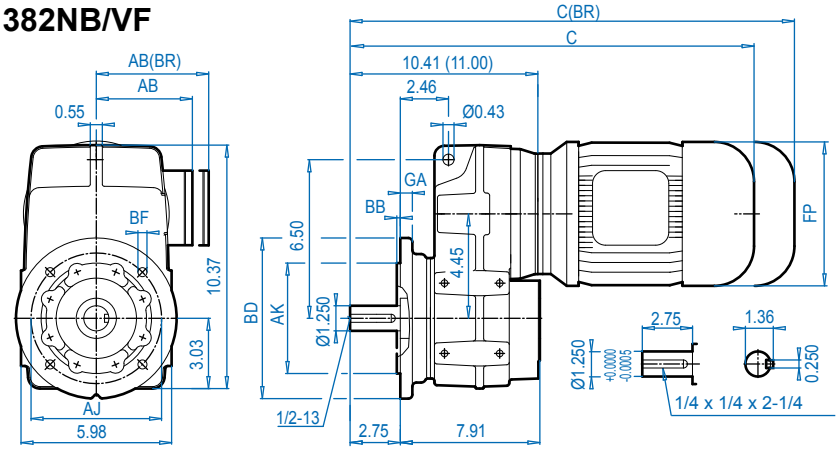

SK 1382NB/ASH

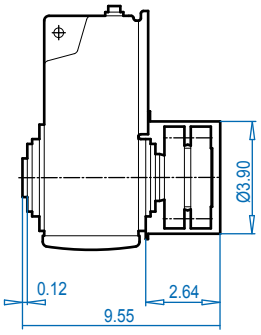

SK 1382NB/AB ⇨🕮 394

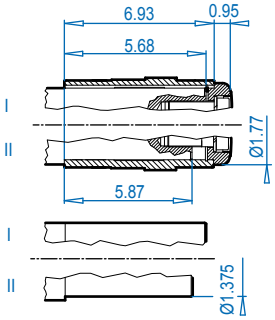

SK 1382NB/AS ⇨🕮 391

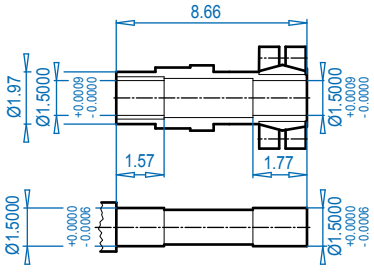

Mounting Flange

BD (mm)	AJ	AK	BB	BF	GA
6.30 (160)	5.12	4.33 +0.00 -0.00	0.14	0.35	0.47
7.87 (200)	6.50	5.12 +0.00 -0.00	0.14	0.43	0.47

Motor dimensions

Standard efficiency	63S/L	71S/L	80S/L	90S/L	100L		For Other Connection Possibilities please see ⇨🕮 376 & 378
Energy efficiency			80LH	90SH/LH	100LH		
AB	4.53	4.88	5.59	5.79	6.65		
AB (BR)	4.84	5.24	5.63	5.83	6.26		
C1	15.24	16.11	16.97	19.09	20.31		
C1 (BR)	17.44	18.39	19.49	22.04	23.91		
C	19.99	18.86	19.72	21.84	23.06		
C (BR)	20.19	21.14	22.24	24.79	26.66		
FP	4.84	5.43	6.14	6.92	7.63		

(BR) denotes Brakemotor

ALTERNATE SHAFTS SEE PAGES 388 - 393

Send Quote Requests to info@automatedpt.com
Call +1(800)985-6929 To Order or Order Online At Nordgearmotors.com

DRIVESYSTEMS





SK 1382NB + NEMA

SK 1382NB/AF

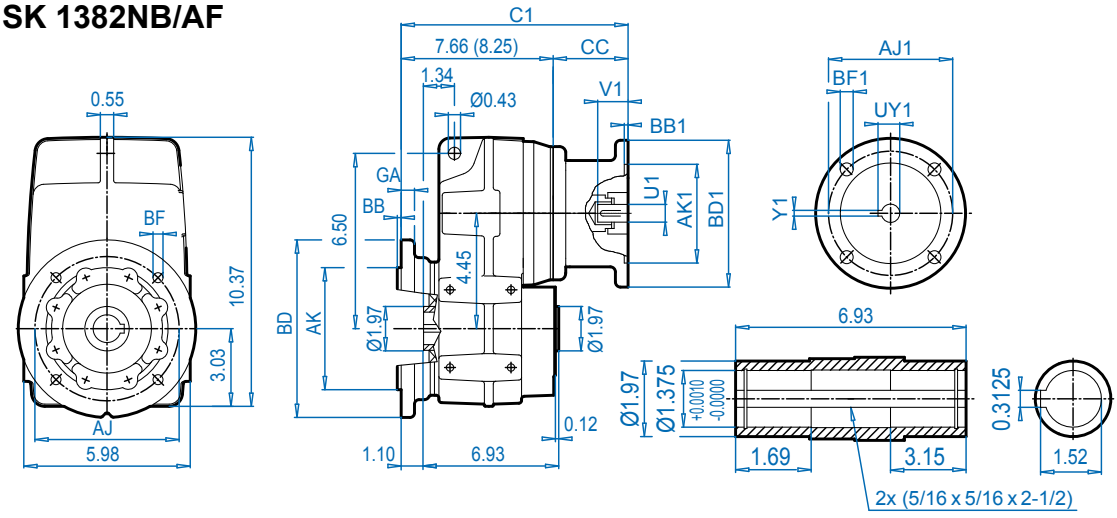

SK 1382NB/VF

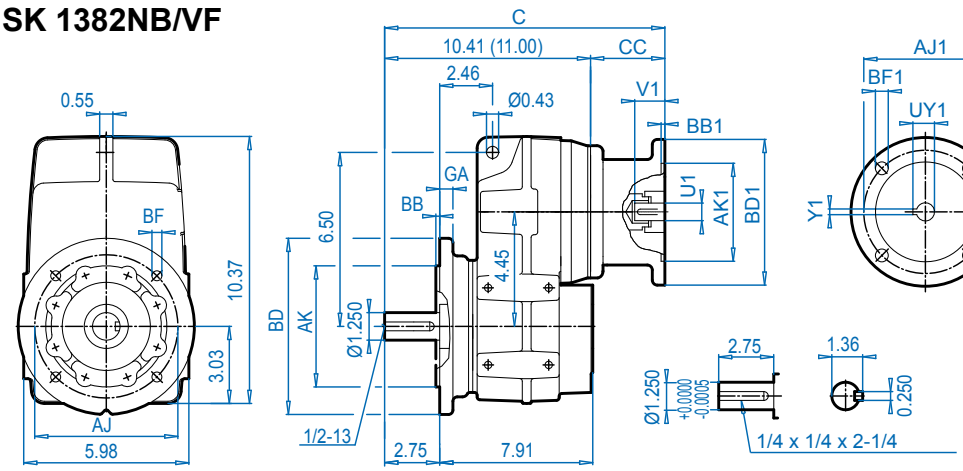

SK 1382NB/ASH

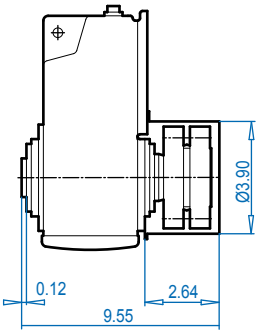

ALTERNATE SHAFTS SEE PAGES 388 - 393

SK 1382NB/AB ⇨🕮 394

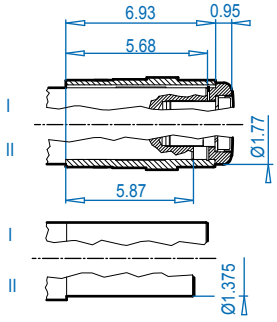

SK 1382NB/ASH ⇨🕮 391

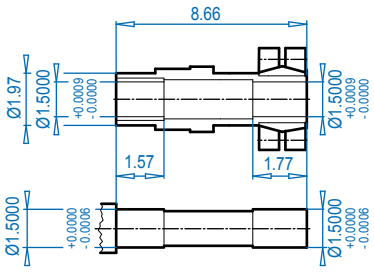

Mounting Flange

BD (mm)	AJ	AK	BB	BF	GA
6.30 (160)	5.12	4.33 +0.00 -0.00	0.14	0.35	0.47
7.87 (200)	6.50	5.12 +0.00 -0.00	0.14	0.43	0.47

NEMA Dimensions

Type	AJ1	AK1	BB1	BD1	BF1	U1	V1	UY1	Y1	C	C1	CC
56C	5.88	4.500	0.18	6.54	0.43	0.625	2.06	0.71	0.188	14.72	11.97	4.29
140TC	5.88	4.500	0.18	6.54	0.43	0.875	2.12	0.96	0.188	14.72	11.97	4.29
180TC	7.25	8.500	0.23	9.17	0.59	1.125	2.62	1.24	0.250	16.53	13.78	5.51

Send Quote Requests to info@automatedpt.com
Call +1(800)985-6929 To Order or Order Online At Nordgearmotors.com

SK 1382NB + Motor



SK 1382NB/AZ

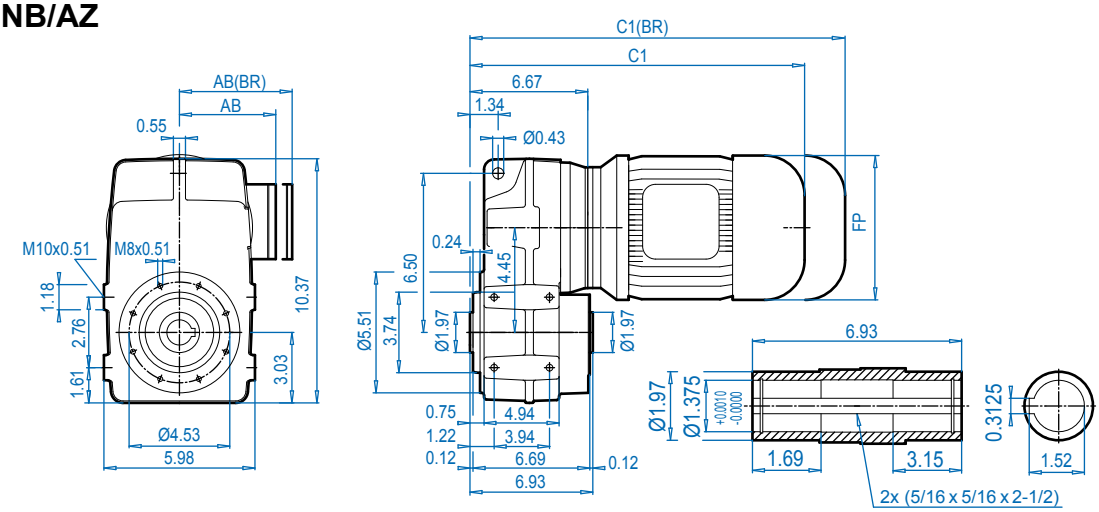

SK 1382NB/VZ

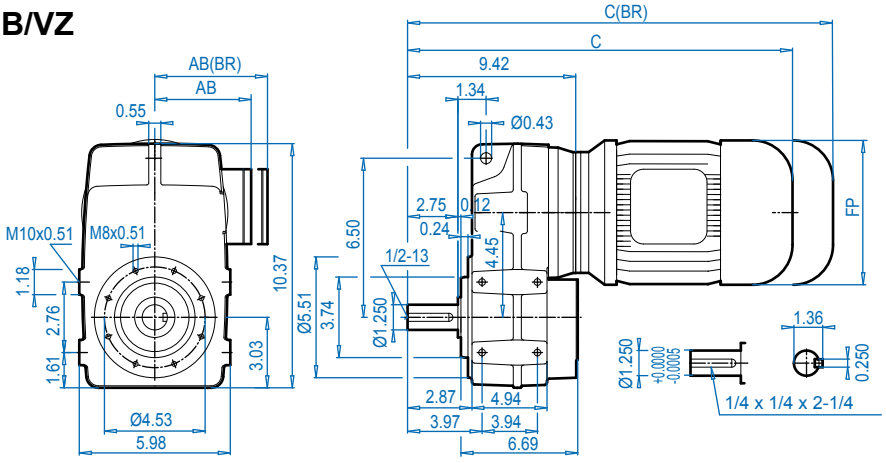

SK 1382**NB/AB**

⇨📖 394

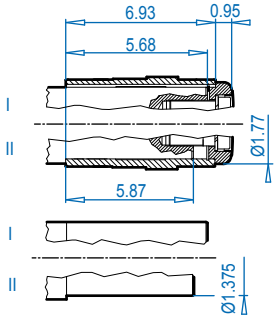

SK 1382NB/**ASH**

⇨📖 391

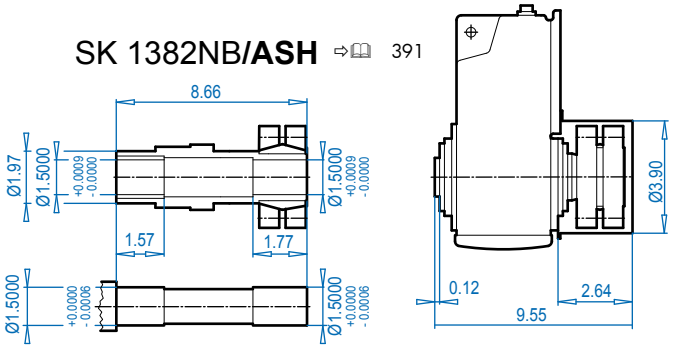

Motor dimensions

Standard efficiency	63S/L	71S/L	80S/L	90S/L	100L		For Other Connection Possibilities please see ⇨📖 376 & 378
Energy efficiency			80LH	90SH/LH	100LH		
AB	4.53	4.88	5.59	5.79	6.65		
AB (BR)	4.84	5.24	5.63	5.83	6.26		
C1	14.13	15.00	15.87	17.44	18.62		
C1 (BR)	16.34	17.28	18.39	20.39	22.21		
C	16.89	17.75	16.62	20.19	21.37		
C (BR)	19.09	20.04	21.14	23.15	24.96		
FP	4.84	5.43	6.14	6.92	7.63		

(BR) denotes Brakemotor

ALTERNATE SHAFTS SEE PAGES 388 - 393

Send Quote Requests to info@automatedpt.com
Call +1(800)985-6929 To Order or Order Online At Nordgearmotors.com

DRIVESYSTEMS





SK 1382NB + NEMA

SK 1382NB/AZ

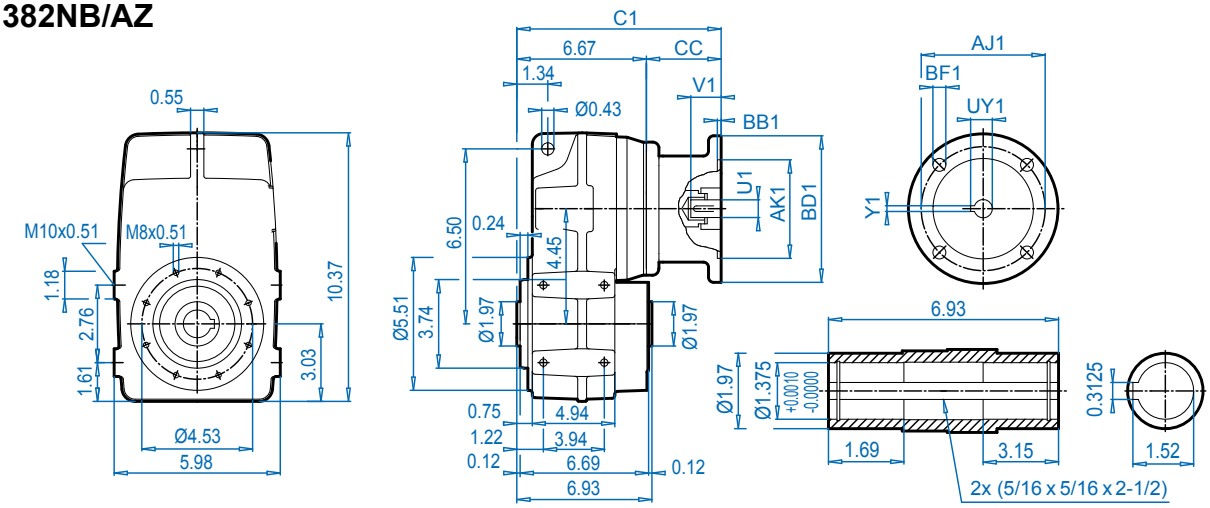

SK 1382NB/VZ

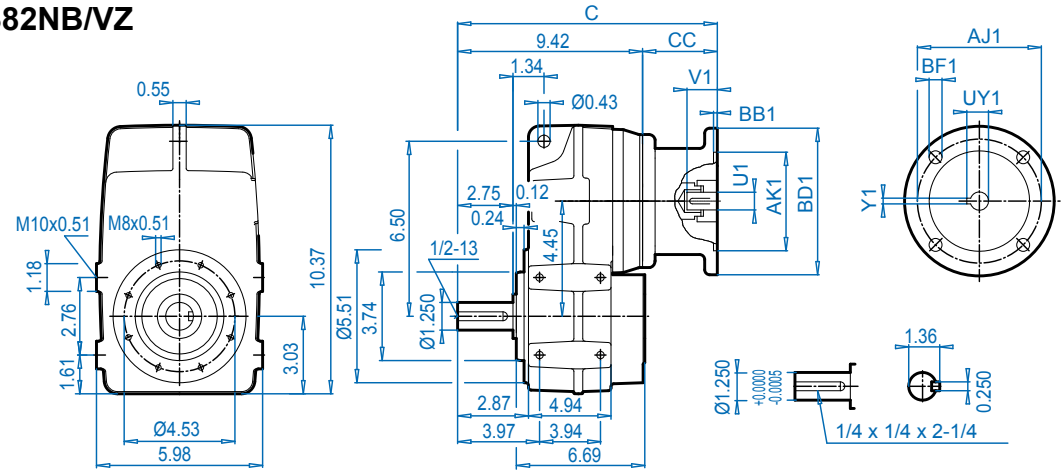

SK 1382**NB/AB**

⇨🕮 394

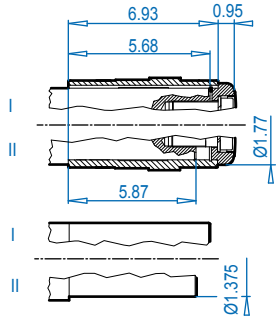

SK 1382NB/**ASH**

⇨🕮 391

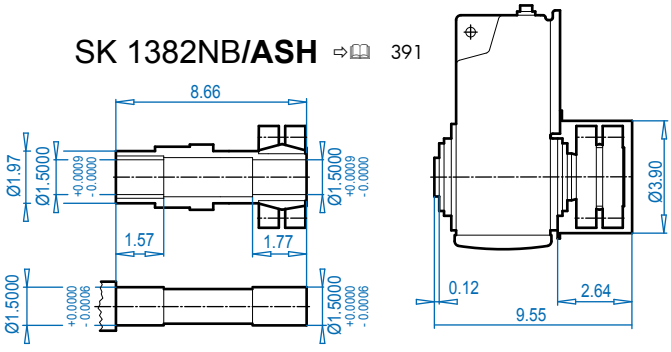

NEMA Dimensions

Type	AJ1	AK1	BB1	BD1	BF1	U1	V1	UY1	Y1	C	C1	CC
56C	5.88	4.500	0.18	6.54	0.43	0.625	2.06	0.71	0.188	13.62	10.87	4.29
140TC	5.88	4.500	0.18	6.54	0.43	0.875	2.12	0.96	0.188	13.62	10.87	4.29
180TC	7.25	8.500	0.23	9.17	0.59	1.125	2.62	1.24	0.250	14.84	12.09	5.51

Send Quote Requests to info@automatedpt.com
Call +1(800)985-6929 To Order or Order Online At Nordgearmotors.com

SK 1282 + Motor




DRIVESYSTEMS

SK 1282V

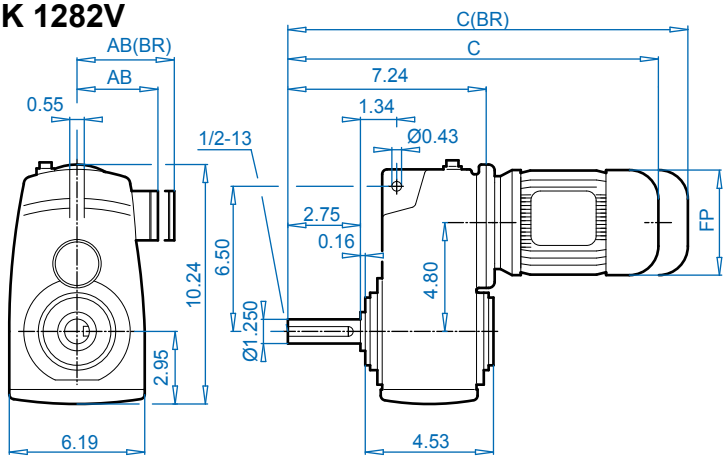

SK 1282A

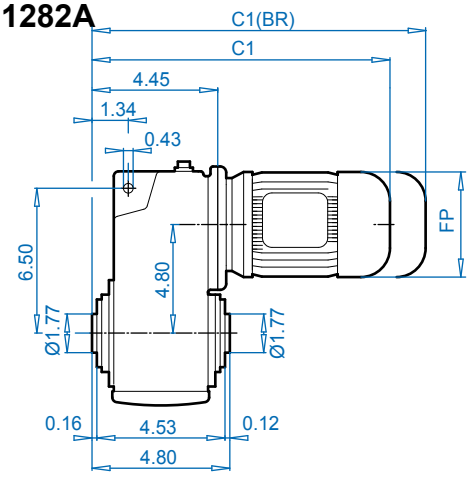

SK 1282VF

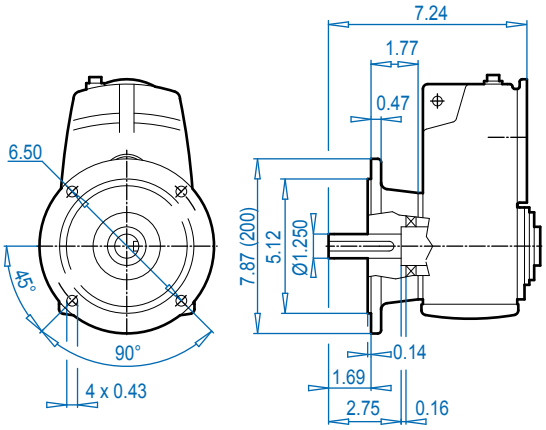

SK 1282AF

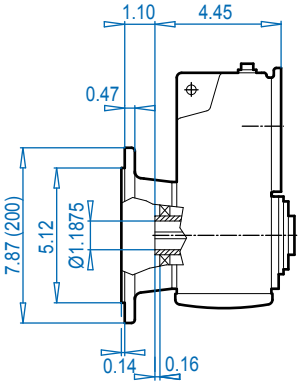

SK 1282ASH

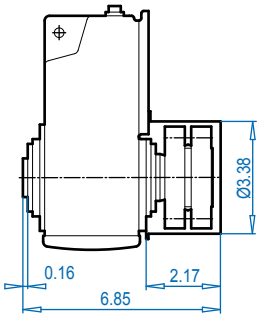

ALTERNATE SHAFTS SEE PAGES 388 - 393

SK 1282V

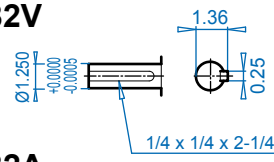

SK 1282A

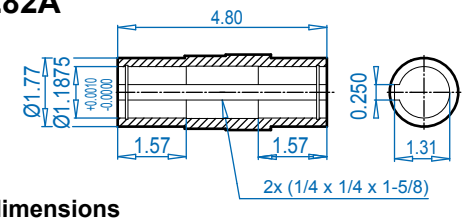

SK 1282AB ⇨🕮 394

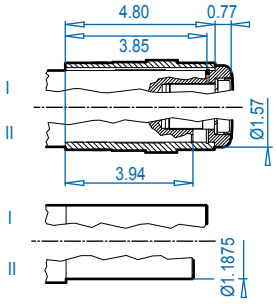

SK 1282AS ⇨🕮 391

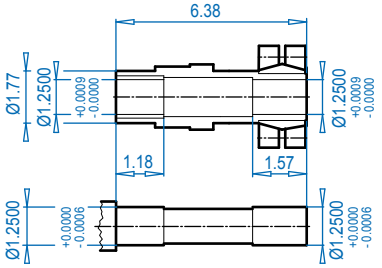

Motor dimensions

Standard efficiency	63S/L	71S/L	80S/L	90S/L	100L		For Other Connection Possibilities please see ⇨🕮 376 & 378
Energy efficiency			80LH	90SH/LH	100LH	112MH	
AB	4.53	4.88	5.59	5.79	6.65	7.05	
AB (BR)	4.84	5.24	5.63	5.83	6.26	6.69	
C1	12.17	13.74	14.73	16.34	17.52	18.43	
C1 (BR)	14.37	16.03	17.25	19.29	21.10	22.09	
C	14.91	16.48	17.47	19.08	20.26	21.17	
C (BR)	17.11	18.77	19.99	22.03	23.84	24.83	
FP	4.84	5.43	6.14	6.92	7.63	8.58	



(BR) denotes Brakemotor

Send Quote Requests to info@automatedpt.com
Call +1(800)985-6929 To Order or Order Online At Nordgearmotors.com

DRIVESYSTEMS





SK 1282 + NEMA

SK 1282V

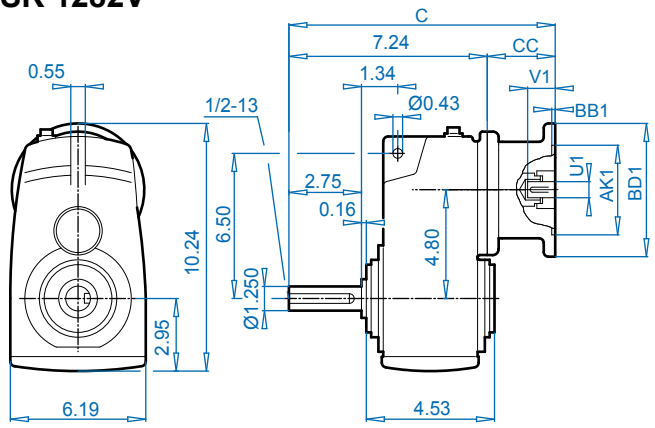

SK 1282A

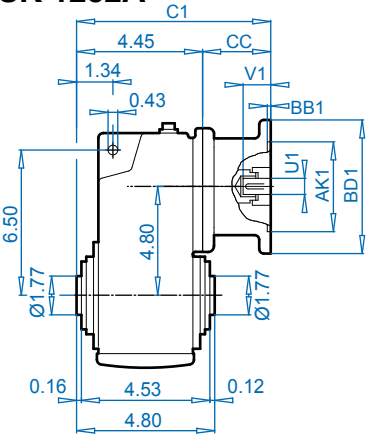

NEMA Input

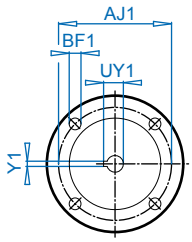

Dimensions in Inches
DIMENSIONS

SK 1282VF

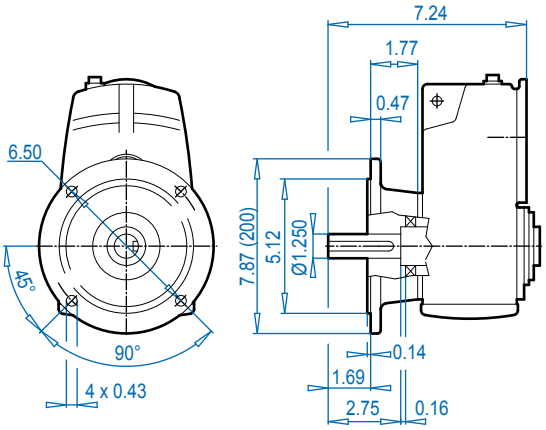

SK 1282AF

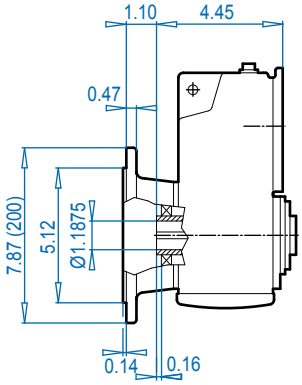

SK 1282ASH

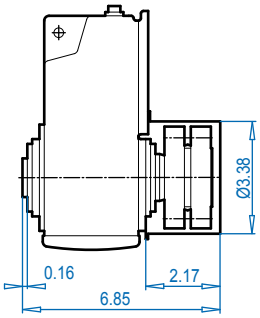

ALTERNATE SHAFTS SEE PAGES 388 - 393

SK 1282V

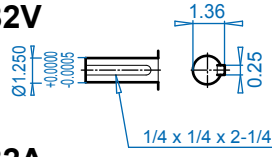

SK 1282A

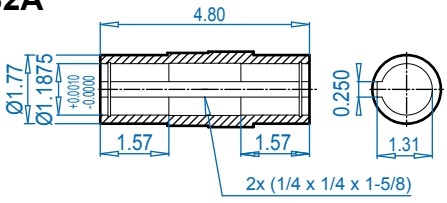

SK 1282AB ⇨📖 394

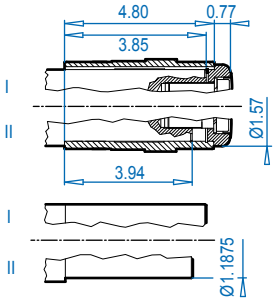

SK 1282AS ⇨📖 391

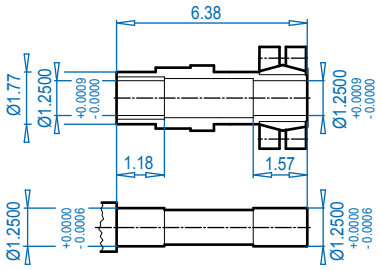

NEMA Dimensions

Type	AJ1	AK1	BB1	BD1	BF1	U1	V1	UY1	Y1	C	C1	CC
56C	5.88	4.500	0.18	6.54	0.43	0.625	2.06	0.71	0.188	11.70	8.95	4.50
140TC	5.88	4.500	0.18	6.54	0.43	0.875	2.12	0.96	0.188	11.70	8.95	4.50
180TC	7.25	8.500	0.23	9.17	0.59	1.125	2.62	1.24	0.250	12.85	10.10	5.65

Send Quote Requests to info@automatedpt.com
Call +1(800)985-6929 To Order or Order Online At Nordgearmotors.com

SK 2282 + Motor




DRIVESYSTEMS

SK 2282V

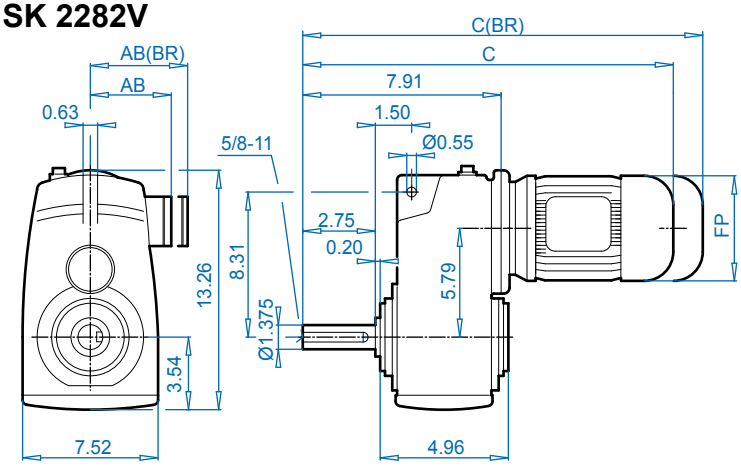

SK 2282A

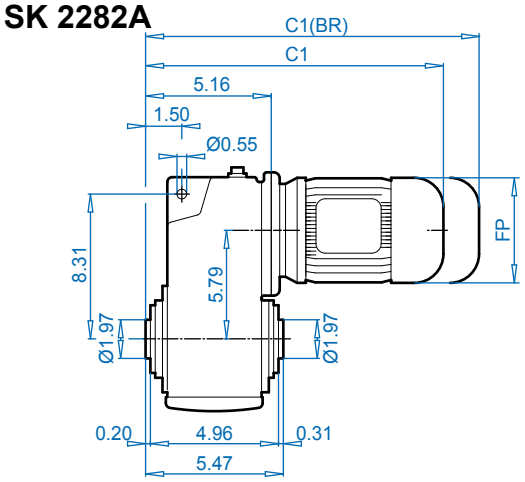

SK 2282VF

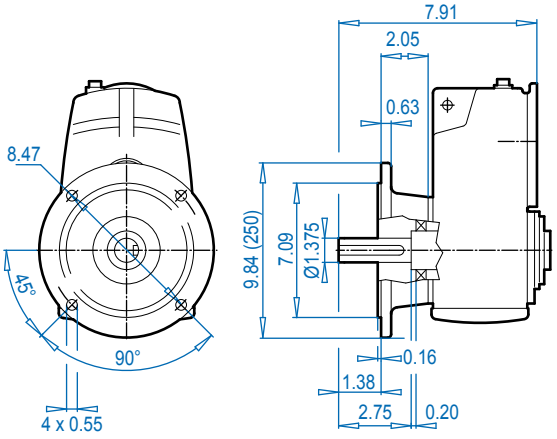

SK 2282AF

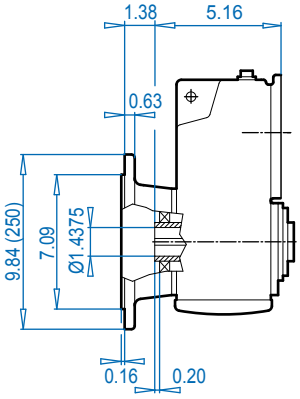

SK 2282ASH

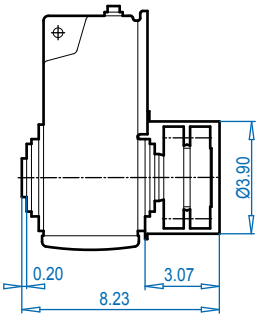

ALTERNATE SHAFTS SEE PAGES 388 - 393

SK 2282V

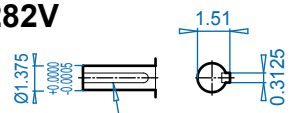

SK 2282A

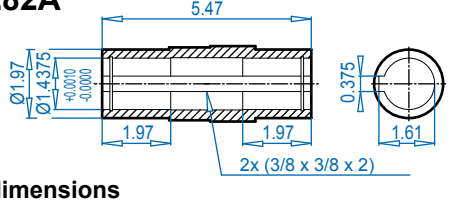

SK 2282AB ⇨📖 394

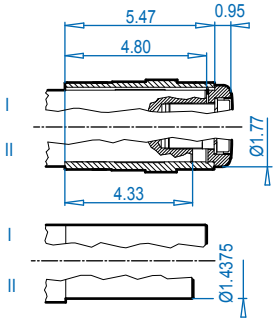

SK 2282AS ⇨📖 391

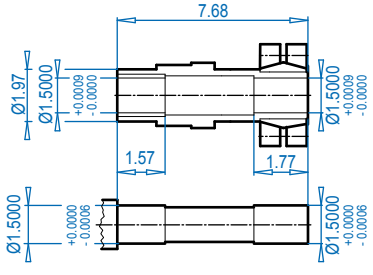

Motor dimensions

Standard efficiency	71S/L	80S/L	90S/L	100L			For Other Connection Possibilities please see ⇨📖 376 & 378
Energy efficiency		80LH	90SH/LH	100LH	112MH		
AB	4.88	5.59	5.79	6.65	7.05		
AB (BR)	5.24	5.63	5.83	6.26	6.69		
C1	14.22	15.20	16.81	18.00	18.90		
C1 (BR)	16.50	17.72	19.77	21.58	22.56		
C	16.97	17.95	19.56	20.75	21.65		
C (BR)	19.25	20.47	22.52	24.33	25.31		
FP	5.43	6.14	6.92	7.63	8.58		

(BR) denotes Brakemotor

Send Quote Requests to info@automatedpt.com
Call +1(800)985-6929 To Order or Order Online At Nordgearmotors.com

DRIVESYSTEMS





SK 2282 + NEMA

SK 2282V

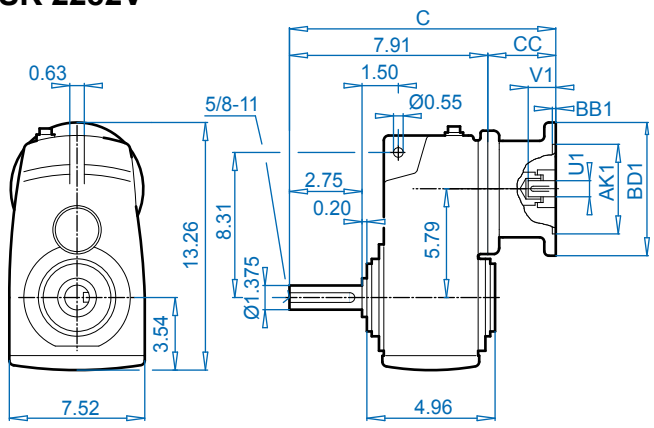

SK 2282A

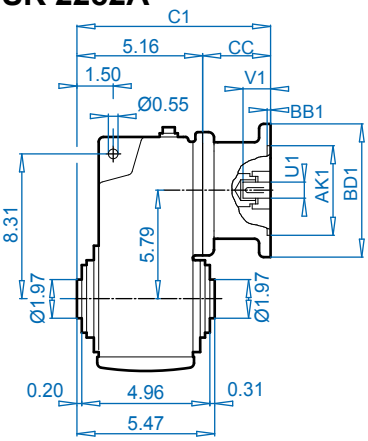

NEMA Input

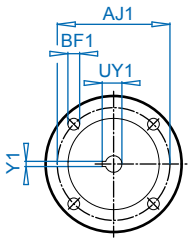

Dimensions in Inches
DIMENSIONS

SK 2282VF

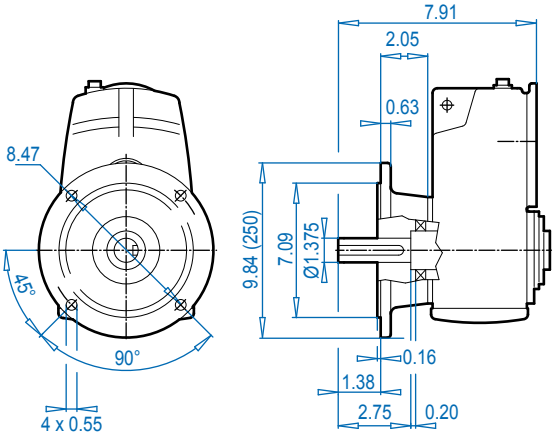

SK 2282AF

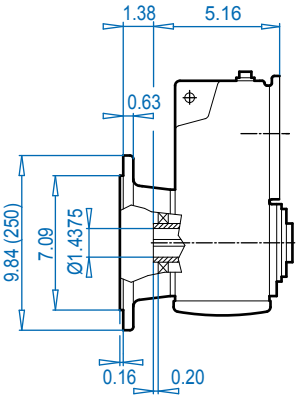

SK 2282ASH

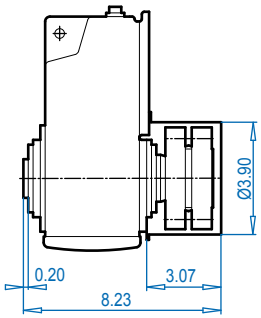

ALTERNATE SHAFTS SEE PAGES 388 - 393

SK 2282V

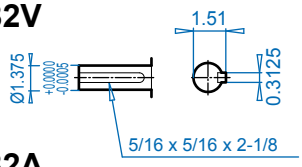

SK 2282A

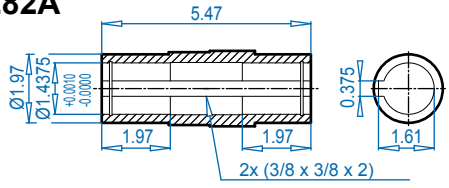

SK 2282AB ⇨🕮 394

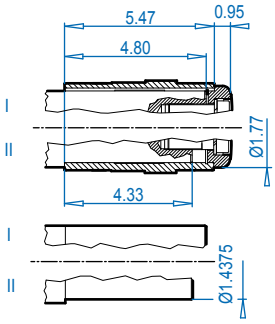

SK 2282AS ⇨🕮 391

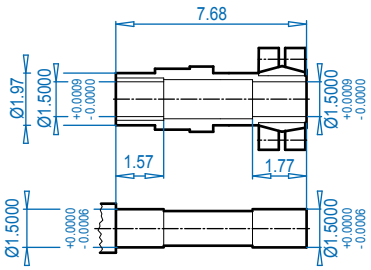

NEMA Dimensions

Type	AJ1	AK1	BB1	BD1	BF1	U1	V1	UY1	Y1	C	C1	CC
56C	5.88	4.500	0.18	6.54	0.43	0.625	2.06	0.71	0.188	12.52	9.76	4.61
140TC	5.88	4.500	0.18	6.54	0.43	0.875	2.12	0.96	0.188	12.52	9.76	4.61
180TC	7.25	8.500	0.23	9.17	0.59	1.125	2.62	1.24	0.250	13.42	10.77	5.51

Send Quote Requests to info@automatedpt.com
Call +1(800)985-6929 To Order or Order Online At Nordgearmotors.com

SK 2382 + Motor





DRIVESYSTEMS

SK 2382V

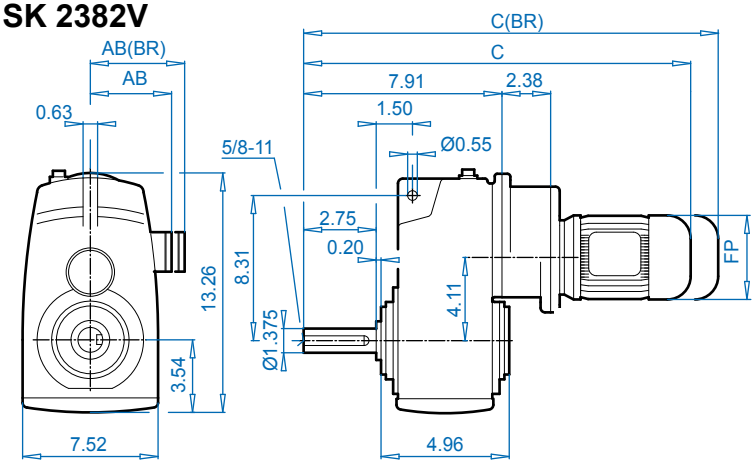

SK 2382A

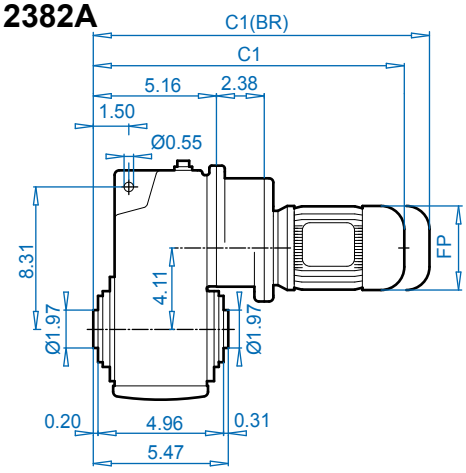

SK 2382VF

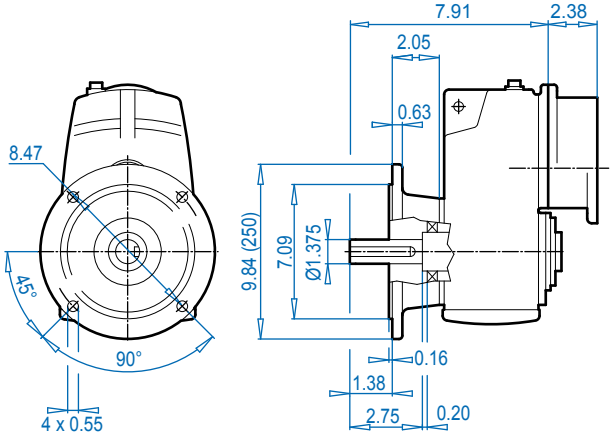

SK 2382AF

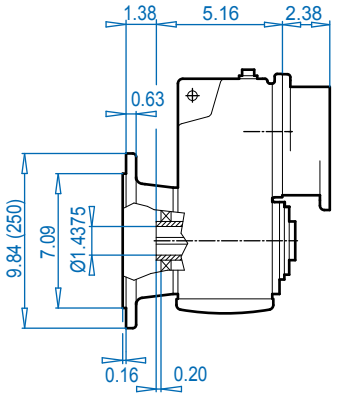

SK 2382V

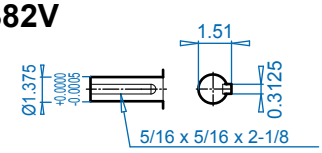

SK 2382A

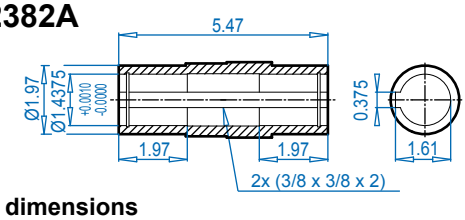

SK 2382AB ⇨📖 394

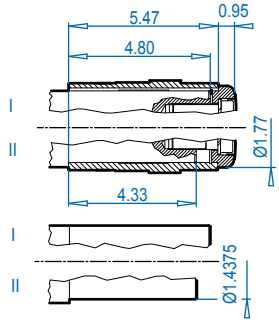

Motor dimensions

Standard efficiency	63S/L	71S/L	80S/L	90S			For Other Connection Possibilities please see ⇨📖 376 & 378
Energy efficiency			80LH	90SH			
AB	4.53	4.88	5.59	5.79			
AB (BR)	4.84	5.24	5.63	5.83			
C1	15.24	16.81	17.80	19.41			
C1 (BR)	17.44	19.09	20.32	22.36			
C	17.99	19.56	20.55	22.16			
C (BR)	20.19	21.84	23.07	25.11			
FP	4.84	5.43	6.14	6.92			

(BR) denotes Brakemotor

ALTERNATE SHAFTS SEE PAGES 388 - 393

Send Quote Requests to info@automatedpt.com
Call +1(800)985-6929 To Order or Order Online At Nordgearmotors.com

DRIVESYSTEMS





SK 2382 + NEMA

SK 2382V

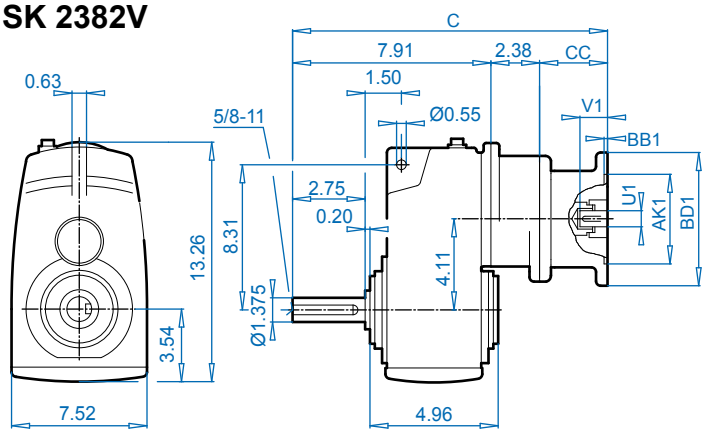

SK 2382A

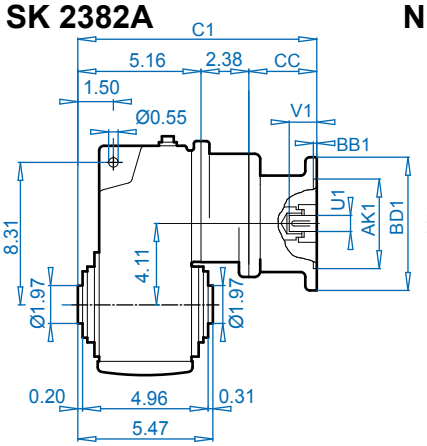

NEMA Input

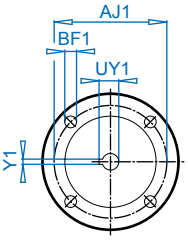

SK 2382VF

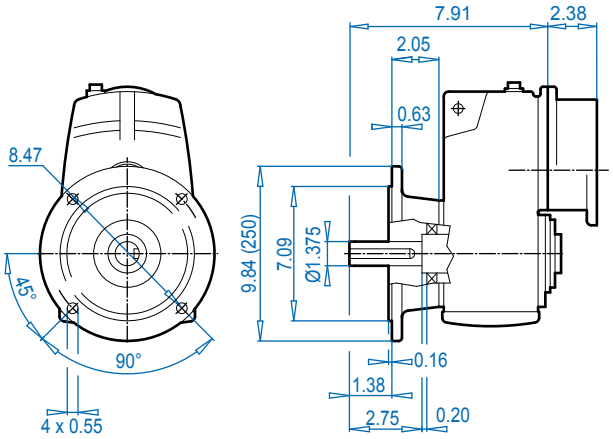

SK 2382AF

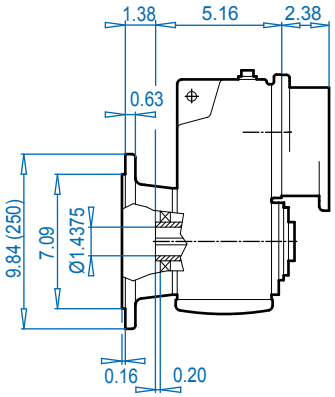

SK 2382V

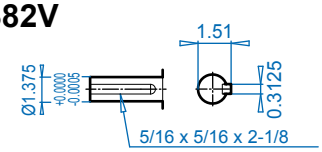

SK 2382A

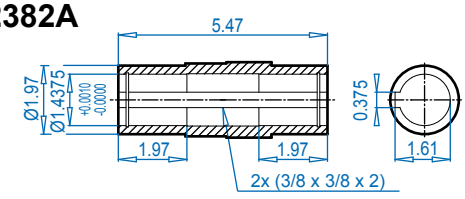

SK 2382AB ⇨🕮 394

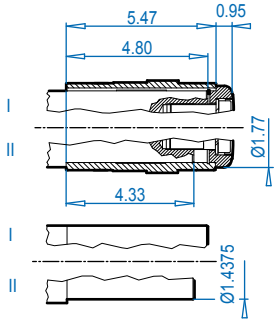

Dimensions in Inches
DIMENSIONS
ALTERNATE SHAFTS SEE PAGES 388 - 393

NEMA Dimensions

Type	AJ1	AK1	BB1	BD1	BF1	U1	V1	UY1	Y1	C	C1	CC
56C	5.88	4.500	0.18	6.54	0.43	0.625	2.06	0.71	0.188	14.77	12.02	4.61
140TC	5.88	4.500	0.18	6.54	0.43	0.875	2.12	0.96	0.188	14.77	12.02	4.61

Send Quote Requests to info@automatedpt.com
Call +1(800)985-6929 To Order or Order Online At Nordgearmotors.com

SK 3282 + Motor




DRIVESYSTEMS

DIMENSIONS — Dimensions in Inches

SK 3282V

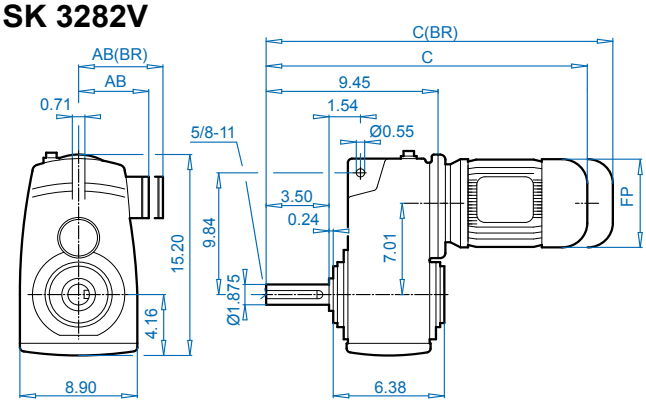

SK 3282A

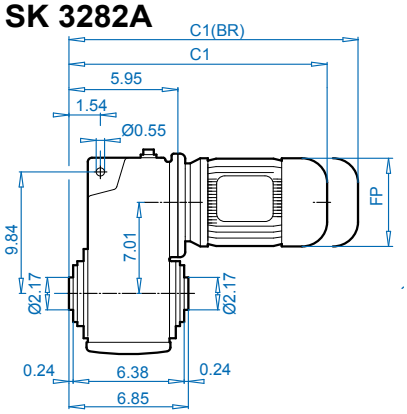

SK 3282VF

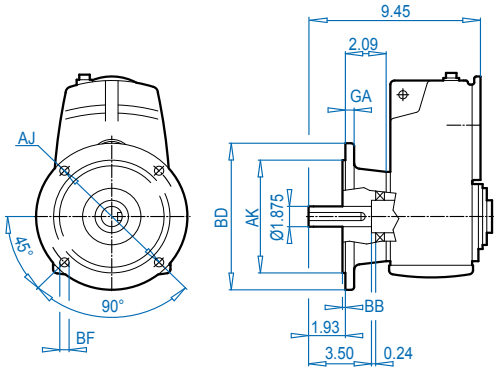

SK 3282AF

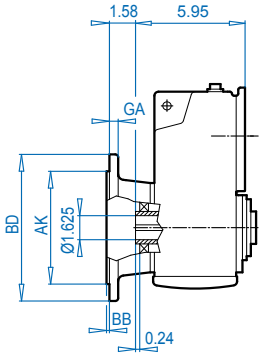

SK 3282ASH

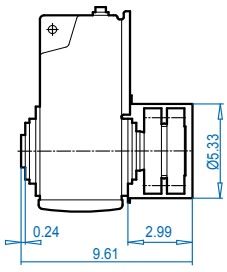

SK 3282V

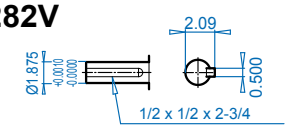

SK 3282A

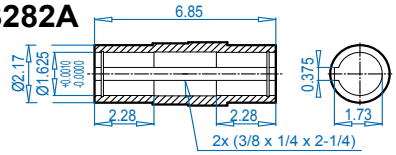

SK 3282AB ⇨🕮 394

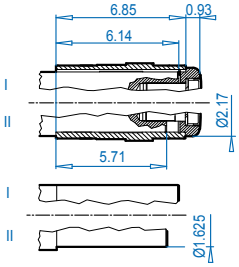

SK 3282AS ⇨🕮 391

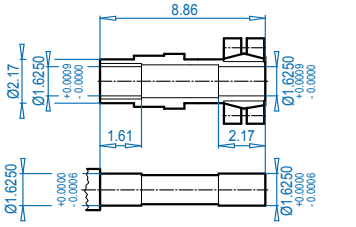

ALTERNATE SHAFTS SEE PAGES 388 - 393

Mounting Flange

BD (mm)	AJ	AK	BB	BF	GA
9.84 (250)	8.46	7.09 +0.0006 -0.0005	0.16	0.53	0.59
11.81 (300)	10.43	9.06 +0.0000 -0.0013	0.16	0.55	0.79

Motor dimensions

Standard efficiency	71S/L	80S/L	90S/L	100L		132S/M	For Other Connection Possibilities please see ⇨🕮 376 & 378
Energy efficiency		80LH	90SH/LH	100LH	112MH	132SH/MH	
AB	4.88	5.59	5.79	6.65	7.05	8.03	
AB (BR)	5.24	5.63	5.83	6.26	6.69	7.72	
C1	15.00	15.99	17.60	18.78	19.69	23.07	
C1 (BR)	17.29	18.51	20.55	22.37	23.35	27.29	
C	18.50	19.49	21.10	22.28	23.19	26.57	
C (BR)	20.79	22.01	24.05	25.87	26.85	30.79	
FP	5.43	6.14	6.92	7.63	8.58	10.16	

(BR) denotes Brakemotor

Send Quote Requests to info@automatedpt.com
Call +1(800)985-6929 To Order or Order Online At Nordgearmotors.com

Send Quote Requests to info@automatedpt.com
Call +1(800)985-6929 To Order or Order Online At Nordgearmotors.com

DRIVESYSTEMS





SK 3282 + NEMA

SK 3282V

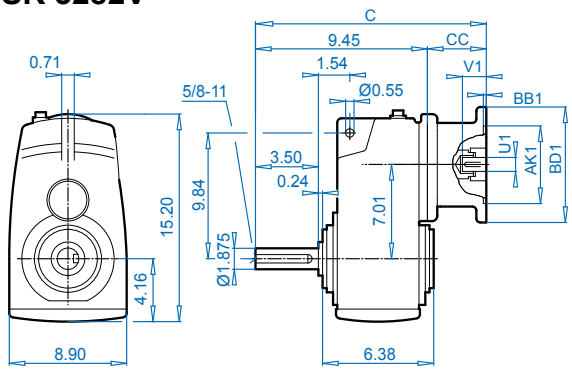

SK 3282A

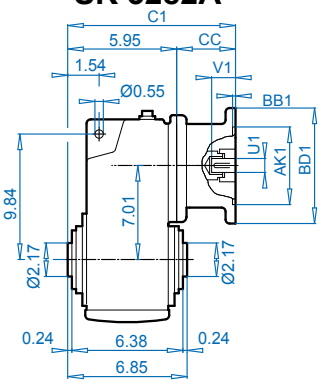

NEMA Input

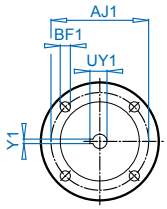

Dimensions in Inches
DIMENSIONS

SK 3282VF

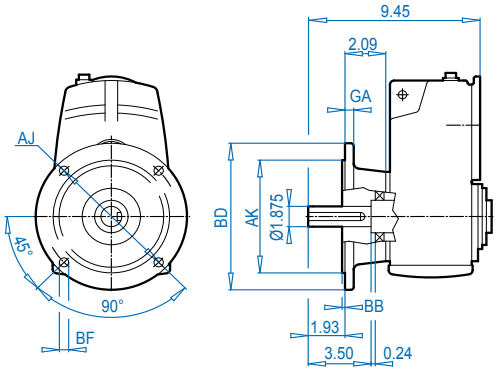

SK 3282AF

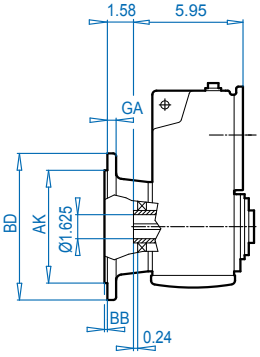

SK 3282ASH

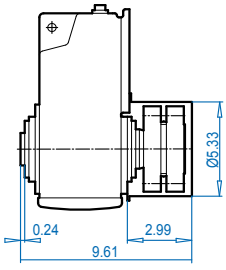

SK 3282V

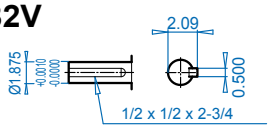

SK 3282A

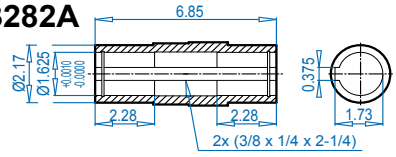

SK 3282AB ⇨📖 394

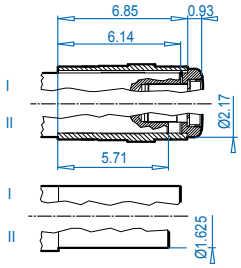

SK 3282AS ⇨📖 391

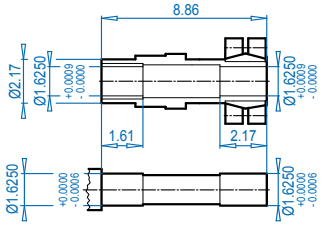

ALTERNATE SHAFTS SEE PAGES 388 - 393

Mounting Flange

BD (mm)	AJ	AK	BB	BF	GA
9.84 (250)	8.46	7.09 +0.0006 -0.0005	0.16	0.53	0.59
11.81 (300)	10.43	9.06 +0.0000 -0.0013	0.16	0.55	0.79

NEMA Dimensions

Type	AJ1	AK1	BB1	BD1	BF1	U1	V1	UY1	Y1	C	C1	CC
56C	5.88	4.500	0.18	6.54	0.43	0.625	2.06	0.71	0.188	14.04	10.54	4.60
140TC	5.88	4.500	0.18	6.54	0.43	0.875	2.12	0.96	0.188	14.04	10.54	4.60
180TC	7.25	8.500	0.23	9.17	0.59	1.125	2.62	1.24	0.250	16.04	12.54	6.60
210TC	7.25	8.500	0.39	9.17	0.59	1.375	3.12	1.52	0.312	16.04	12.54	6.60

Send Quote Requests to info@automatedpt.com
Call +1(800)985-6929 To Order or Order Online At Nordgearmotors.com

SK 3382 + Motor



DRIVESYSTEMS

SK 3382V

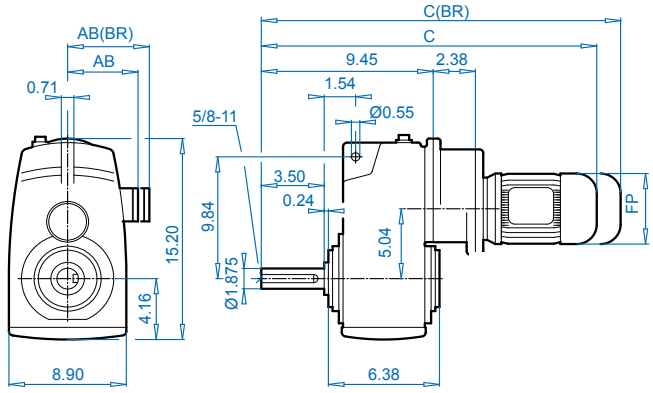

SK 3382A

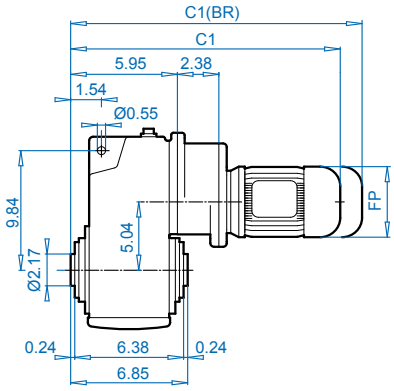

SK 3382VF

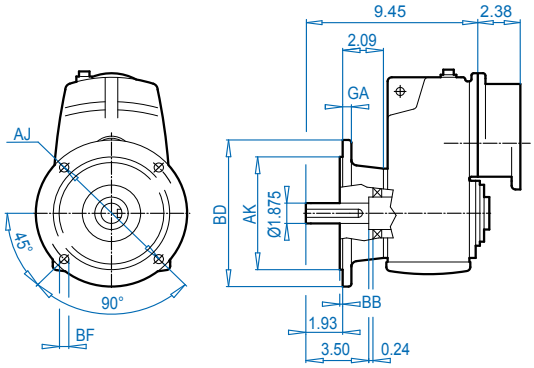

SK 3382AF

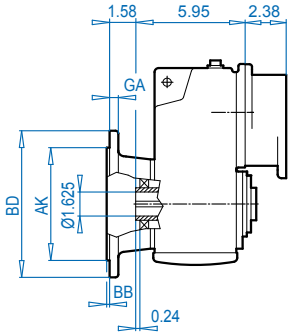

SK 3382ASH

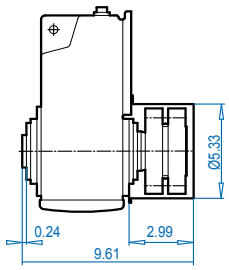

ALTERNATE SHAFTS SEE PAGES 388 - 393

SK 3382V

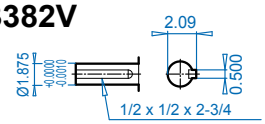

SK 3382A

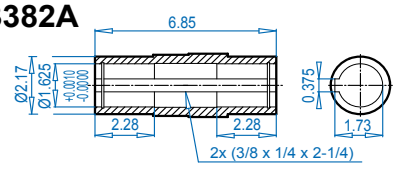

SK 3382AB ⇨📖 394

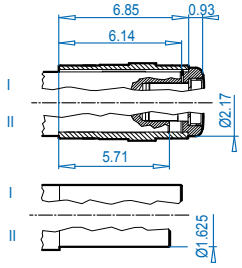

SK 3382AS ⇨📖 391

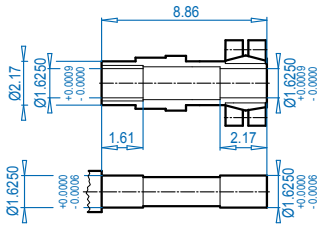

Motor dimensions

Standard eff.	63S/L	71S/L	80S/L	For Other Connection Possibilities please see ⇨📖 376 & 378
Energy eff.			80LH	
AB	4.53	4.88	5.59	
AB (BR)	4.84	5.24	5.63	
C1	16.02	17.59	18.58	
C1 (BR)	18.22	19.87	21.10	
C	19.52	21.09	22.08	
C (BR)	21.72	23.37	24.60	
FP	4.84	5.43	6.14	



(BR) denotes Brakemotor

Mounting Flange

BD (mm)	AJ	AK	BB	BF	GA
9.84 (250)	8.46	7.09 +0.0006 -0.0005	0.16	0.53	0.59
11.81 (300)	10.43	9.06 +0.0000 -0.0013	0.16	0.55	0.79

Send Quote Requests to info@automatedpt.com
Call +1(800)985-6929 To Order or Order Online At Nordgearmotors.com

DRIVESYSTEMS





SK 3382 + NEMA

SK 3382V

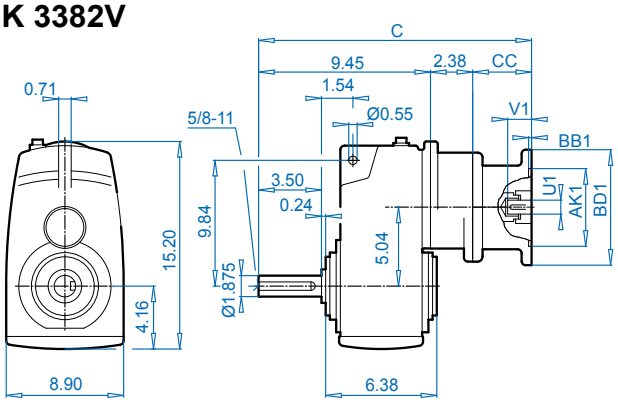

SK 3382A

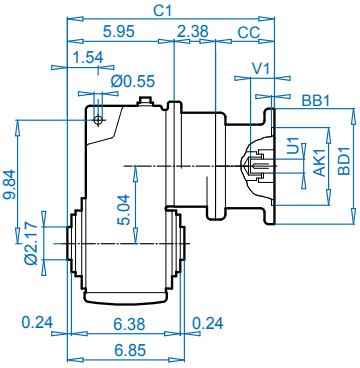

NEMA Input

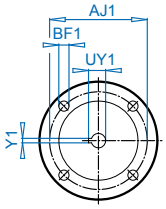

SK 3382VF

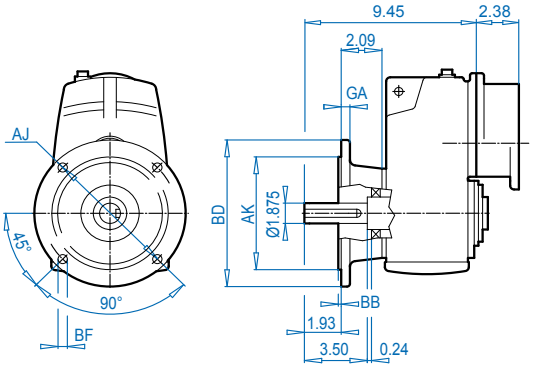

SK 3382AF

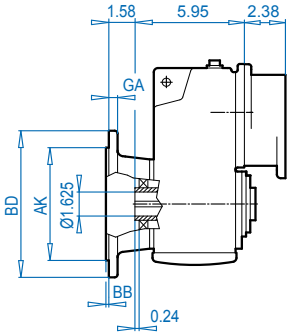

SK 3382ASH

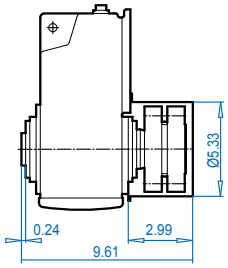

SK 3382V

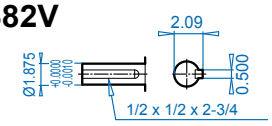

SK 3382A

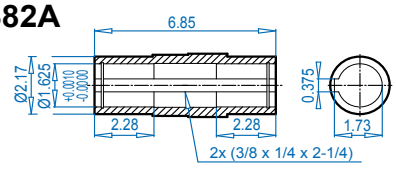

SK 3382AB ⇨📖 394

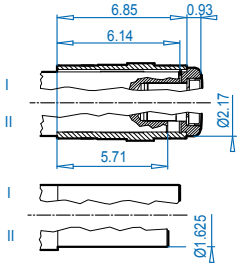

SK 3382AS ⇨📖 391

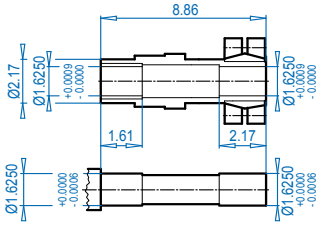

Mounting Flange

BD (mm)	AJ	AK	BB	BF	GA
9.84 (250)	8.46	7.09 +0.0006 -0.0005	0.16	0.53	0.59
11.81 (300)	10.43	9.06 +0.0000 -0.0013	0.16	0.55	0.79

NEMA Dimensions

Type	AJ1	AK1	BB1	BD1	BF1	U1	V1	UY1	Y1	C	C1	CC
56C	5.88	4.500	0.18	6.54	0.43	0.625	2.06	0.71	0.188	11.06	8.94	4.45
140TC	5.88	4.500	0.18	6.54	0.43	0.875	2.12	0.96	0.188	11.06	8.94	4.45

Send Quote Requests to info@automatedpt.com
Call +1(800)985-6929 To Order or Order Online At Nordgearmotors.com

SK 4282 + Motor





DRIVESYSTEMS

SK 4282V

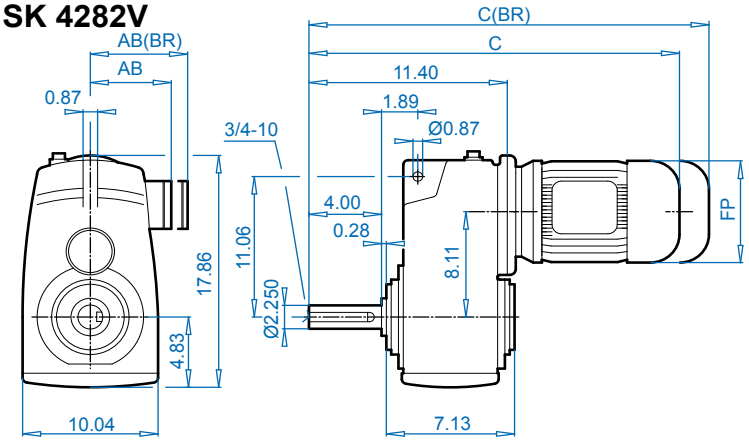

SK 4282A

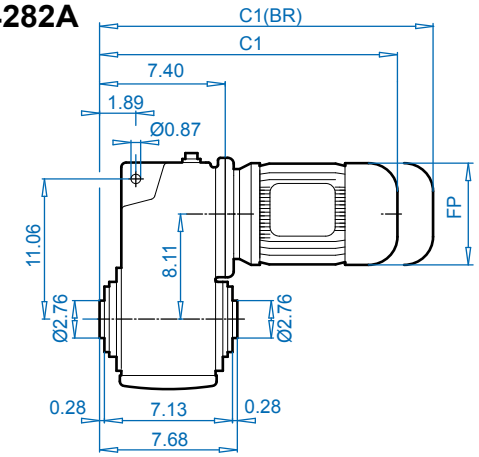

SK 4282VF

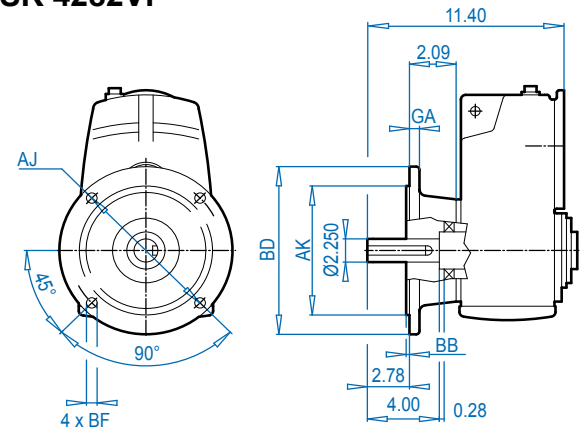

SK 4282AF

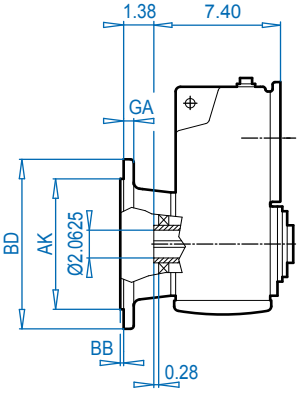

SK 4282ASH

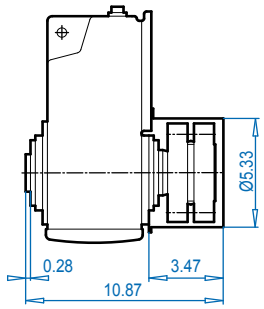

SK 4282V

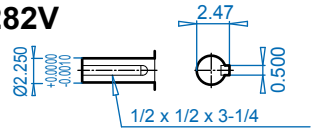

SK 4282A

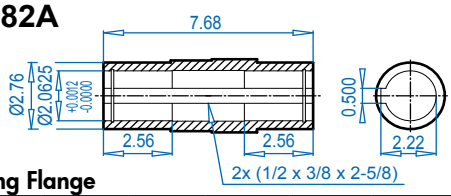

SK 4282AB

⇨🕮 394

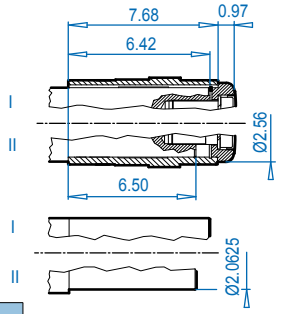

SK 4282AS

⇨🕮 391

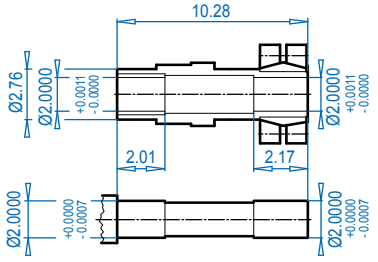

Mounting Flange

BD (mm)	AJ	AK	BB	BF	GA
9.84 (250)	8.46	7.09 $^{+0.0006}_{-0.0005}$	0.16	0.55	0.63
11.81 (300)	10.43	9.06 $^{+0.0000}_{-0.0013}$	0.16	0.55	0.79

Motor dimensions

Standard efficiency	90S/L	100L		132S/M	160M/L		For Other Connection Possibilities please see ⇨🕮 376 & 378
Energy efficiency	90SH/LH	100LH	112MH	132SH/MH	160MH	160LH	
AB	5.79	6.65	7.05	8.03	9.53	9.53	
AB (BR)	5.83	6.26	6.69	7.72	9.53	9.53	
C1	18.31	19.49	20.40	23.78	26.26	27.84	
C1 (BR)	21.26	23.08	24.06	28.00	32.84	34.57	
C	22.31	23.49	24.40	27.78	30.26	31.84	
C (BR)	25.26	27.08	28.06	32.00	36.84	38.57	
FP	6.92	7.63	8.58	10.16	12.60	12.60	

(BR) denotes Brakemotor

ALTERNATE SHAFTS SEE PAGES 388 - 393

Send Quote Requests to info@automatedpt.com
Call +1(800)985-6929 To Order or Order Online At Nordgearmotors.com

DRIVESYSTEMS





SK 4282 + NEMA

SK 4282V

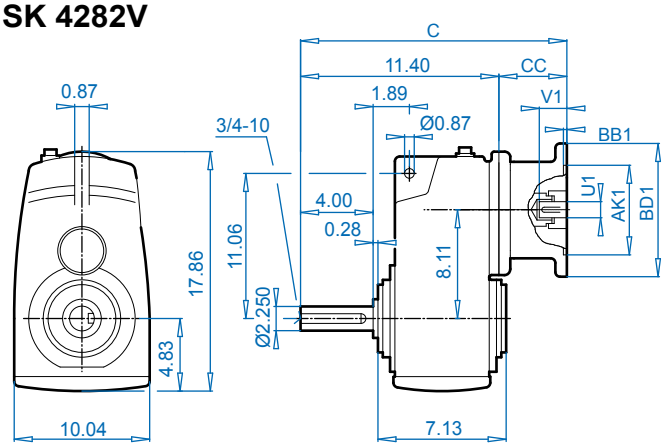

SK 4282A

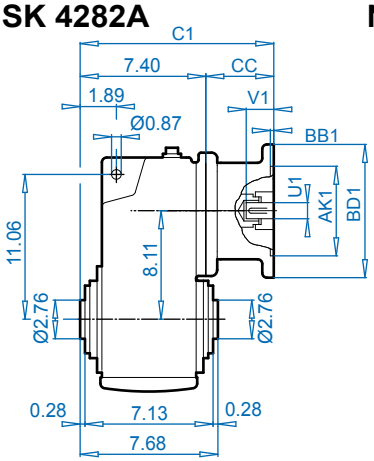

NEMA Input

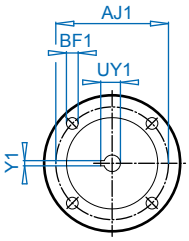

Dimensions in Inches
DIMENSIONS

SK 4282VF

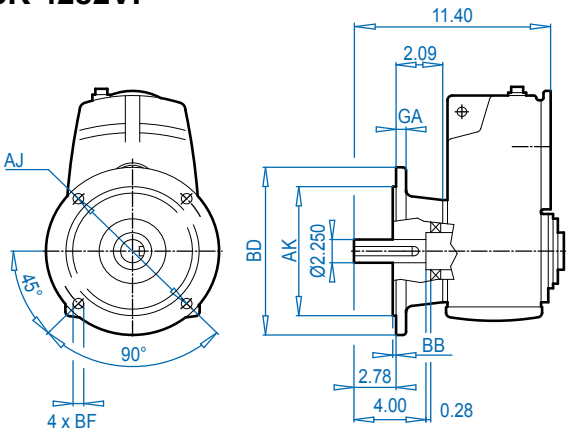

SK 4282AF

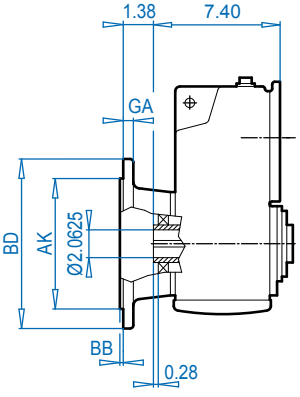

SK 4282ASH

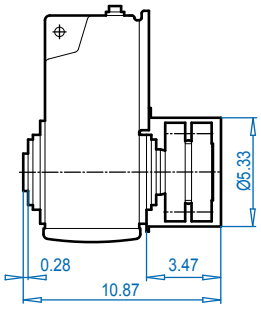

SK 4282V

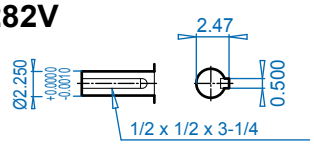

SK 4282A

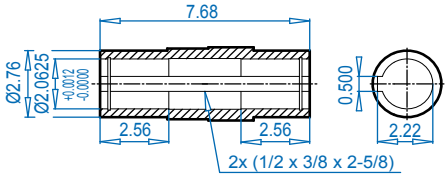

SK 4282AB ⇨🕮 394

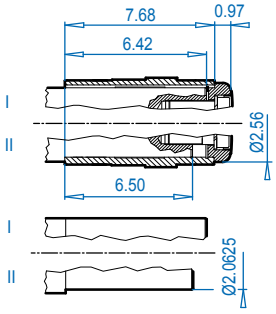

SK 4282AS ⇨🕮 391

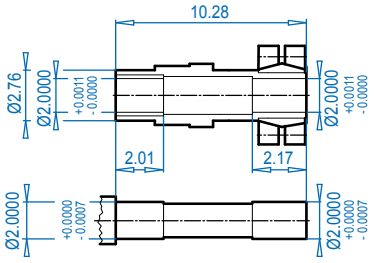

Mounting Flange

BD (mm)	AJ	AK	BB	BF	GA
9.84 (250)	8.46	7.09 $^{+0.0006}_{-0.0005}$	0.16	0.55	0.63
11.81 (300)	10.43	9.06 $^{+0.0000}_{-0.0013}$	0.16	0.55	0.79

NEMA Dimensions

Type	AJ1	AK1	BB1	BD1	BF1	U1	V1	UY1	Y1	C	C1	CC
56C	5.88	4.500	0.18	6.54	0.43	0.625	2.06	0.71	0.188	15.74	11.74	4.30
140TC	5.88	4.500	0.18	6.54	0.43	0.875	2.12	0.96	0.188	15.74	11.74	4.30
180TC	7.25	8.500	0.23	9.17	0.59	1.125	2.62	1.24	0.250	19.34	15.34	7.90
210TC	7.25	8.500	0.39	9.17	0.59	1.375	3.12	1.52	0.312	19.34	15.34	7.90
250TC	7.25	8.500	0.23	9.17	0.59	1.625	3.75	1.80	0.375	19.34	15.34	7.90

ALTERNATE SHAFTS SEE PAGES 388 - 393

Send Quote Requests to info@automatedpt.com
Call +1(800)985-6929 To Order or Order Online At Nordgearmotors.com

SK 4382 + Motor





DRIVESYSTEMS

SK 4382V

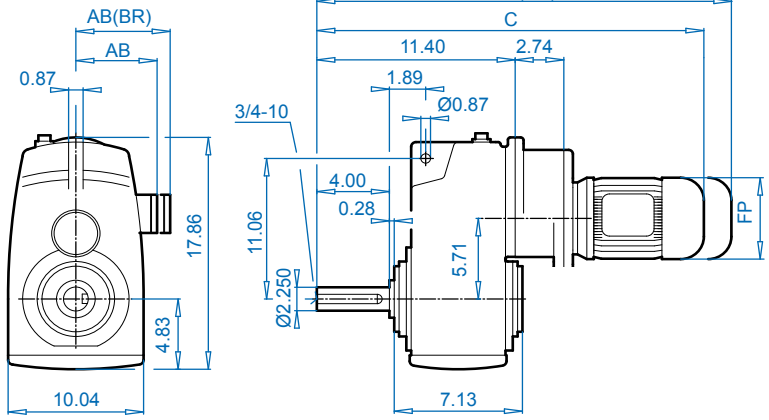

SK 4382A

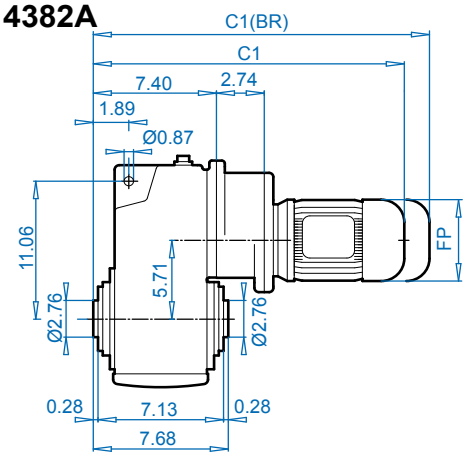

SK 4382VF

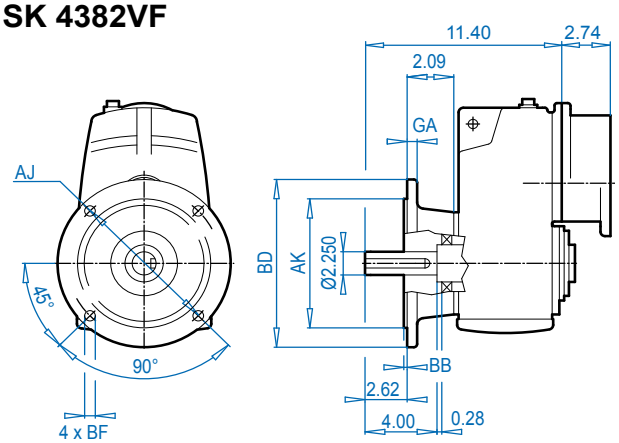

SK 4382AF

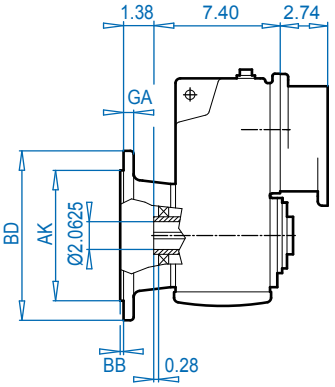

SK 4382V

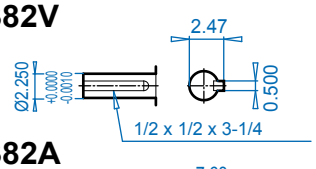

SK 4382A

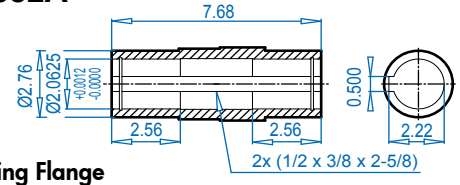

SK 4382AB

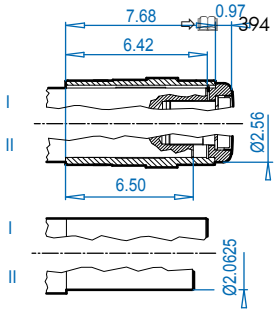

Mounting Flange

BD (mm)	AJ	AK	BB	BF	GA
9.84 (250)	8.46	7.09 +0.0006 -0.0005	0.16	0.55	0.63
11.81 (300)	10.43	9.06 +0.0000 -0.0013	0.16	0.55	0.79

Motor dimensions

Standard efficiency	71S/L	80S/L	90S/L	100L			For Other Connection Possibilities please see ⇨🕮 376 & 378
Energy efficiency		80LH	90SH/LH	100LH	112MH		
AB	4.88	5.59	5.79	6.65	7.05		
AB (BR)	5.24	5.63	5.83	6.26	6.69		
C1	19.22	20.20	21.81	22.99	23.90		
C1 (BR)	21.50	22.72	24.77	26.58	27.56		
C	23.22	24.20	25.81	26.99	27.90		
C (BR)	25.50	26.72	28.77	30.58	31.56		
FP	5.43	6.14	6.92	7.63	8.58		

(BR) denotes Brakemotor

ALTERNATE SHAFTS SEE PAGES 388 - 393

Send Quote Requests to info@automatedpt.com
Call +1(800)985-6929 To Order or Order Online At Nordgearmotors.com

DRIVESYSTEMS





SK 4382 + NEMA

SK 4382V

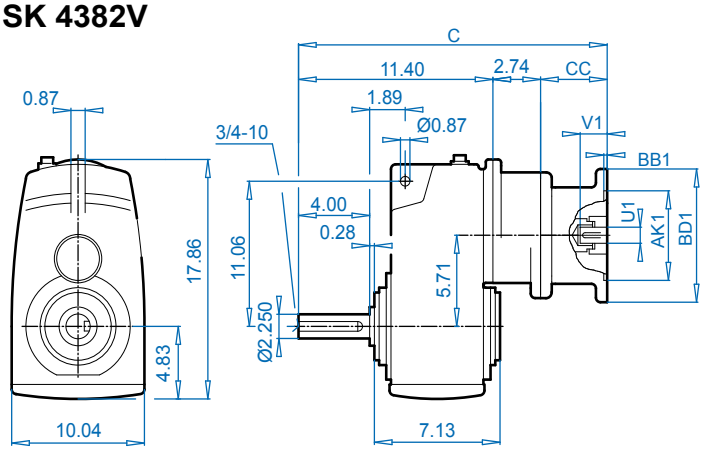

SK 4382A

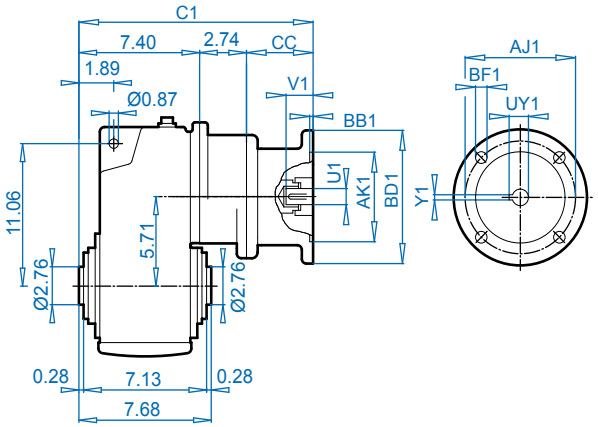

NEMA Input

SK 4382VF

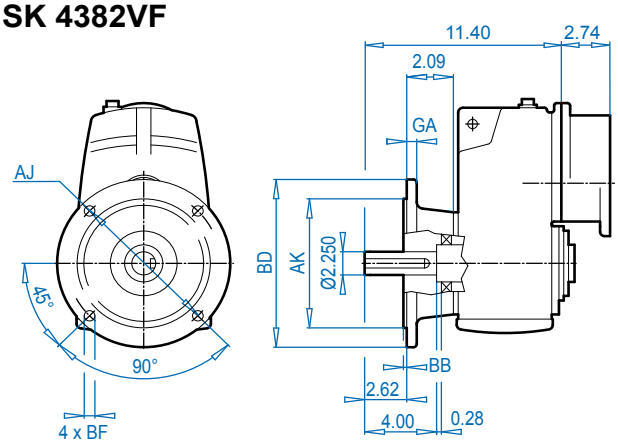

SK 4382AF

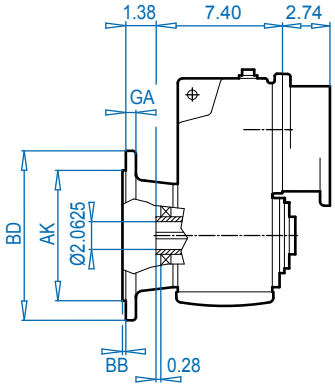

SK 4382V

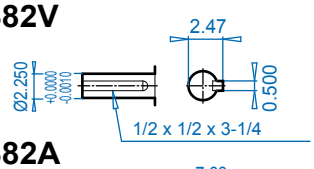

SK 4382A

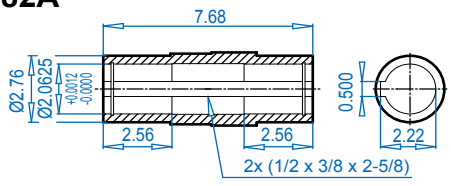

SK 4382AB

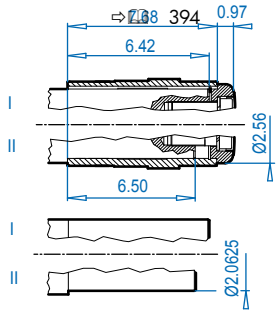

Mounting Flange

BD (mm)	AJ	AK	BB	BF	GA
9.84 (250)	8.46	7.09 +0.0006 -0.0005	0.16	0.55	0.63
11.81 (300)	10.43	9.06 +0.0000 -0.0013	0.16	0.55	0.79

NEMA Dimensions

Type	AJ1	AK1	BB1	BD1	BF1	U1	V1	UY1	Y1	C	C1	CC
56C	5.88	4.500	0.18	6.54	0.43	0.625	2.06	0.71	0.188	18.76	14.76	4.60
140TC	5.88	4.500	0.18	6.54	0.43	0.875	2.12	0.96	0.188	18.76	14.76	4.60
180TC	7.25	8.500	0.23	9.17	0.59	1.125	2.62	1.24	0.250	20.76	16.76	6.60

Dimensions in Inches
DIMENSIONS
ALTERNATE SHAFTS SEE PAGES 388 - 393

Send Quote Requests to info@automatedpt.com
Call +1(800)985-6929 To Order or Order Online At Nordgearmotors.com

SK 5282 + Motor




DRIVESYSTEMS

DIMENSIONS
Dimensions in Inches

SK 5282V

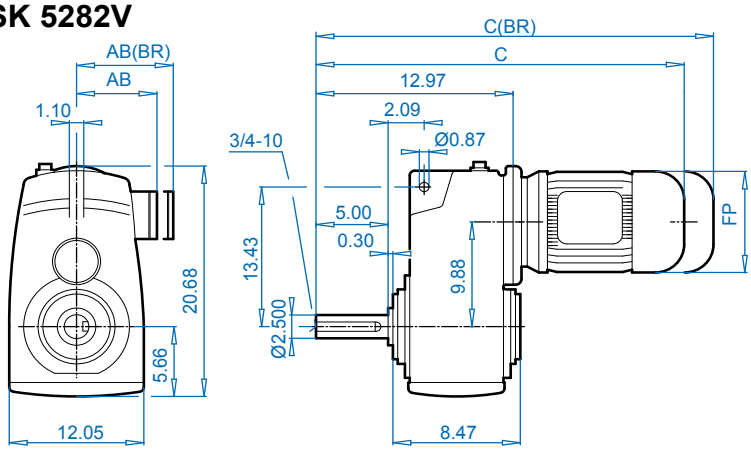

SK 5282A

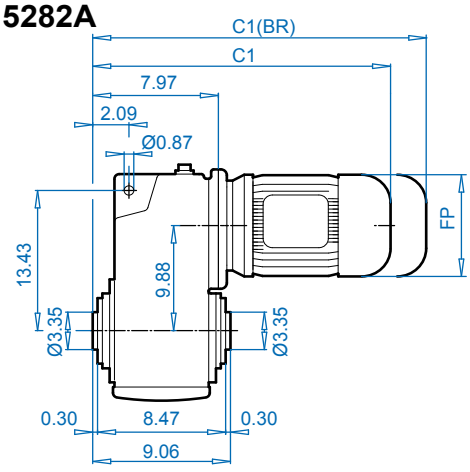

SK 5282VF

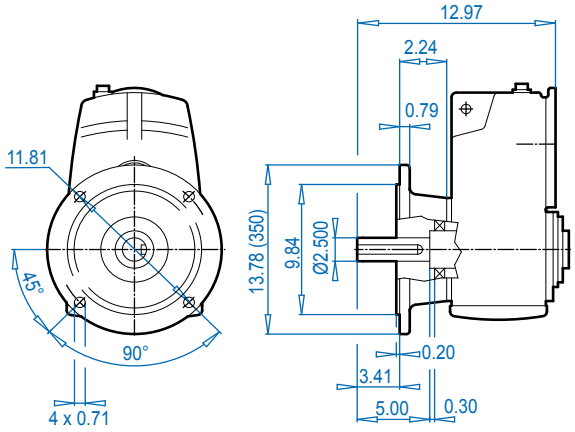

SK 5282AF

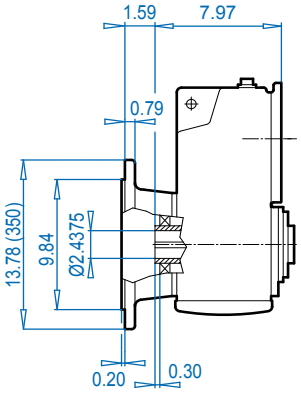

SK 5282ASH

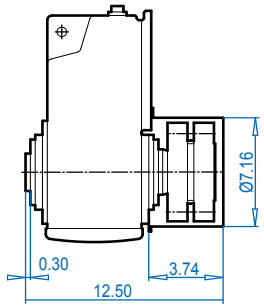

ALTERNATE SHAFTS SEE PAGES 388 - 393

SK 5282V

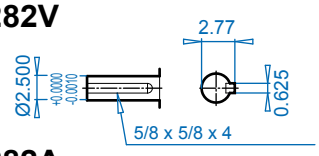

SK 5282A

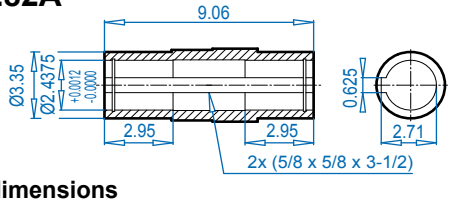

SK 5282AB ⇨📖 394

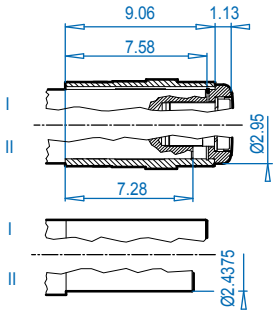

SK 5282AS ⇨📖 391

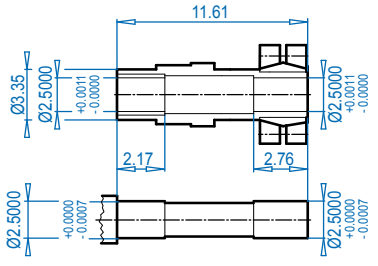

Motor dimensions

Standard eff.	90S/L	100L		132S/M	160M/L		180MX/LX		For Other Connection Possibilities please see ⇨📖 376 & 378
Energy eff.	90SH/LH	100LH	112MH	132SH/MH	160MH	160LH		180MH/LH	
AB	5.79	6.65	7.05	8.03	8.90	8.90	8.90	10.20	
AB (BR)	5.83	6.26	6.69	7.72	8.90	8.90	8.90	10.20	
C1	18.86	20.04	20.95	24.34	26.82	28.39	28.39	32.49	
C1 (BR)	21.82	23.63	24.61	28.55	33.39	35.12	35.12	36.62	
C	23.86	25.04	25.95	29.34	31.82	33.39	33.39	37.49	
C (BR)	26.82	28.63	29.61	33.55	38.39	40.12	40.12	41.62	
FP	6.92	7.63	8.58	10.16	12.60	12.60	12.60	14.09	

(BR) denotes Brakemotor

Send Quote Requests to info@automatedpt.com
Call +1(800)985-6929 To Order or Order Online At Nordgearmotors.com

DRIVESYSTEMS





SK 5282 + NEMA

SK 5282V

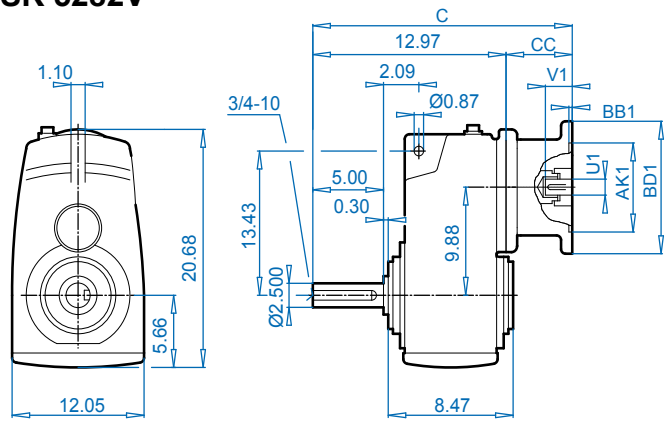

SK 5282A

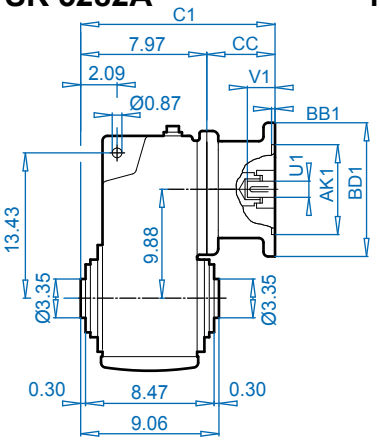

NEMA Input

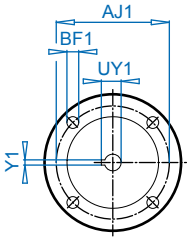

Dimensions in Inches
DIMENSIONS

SK 5282VF

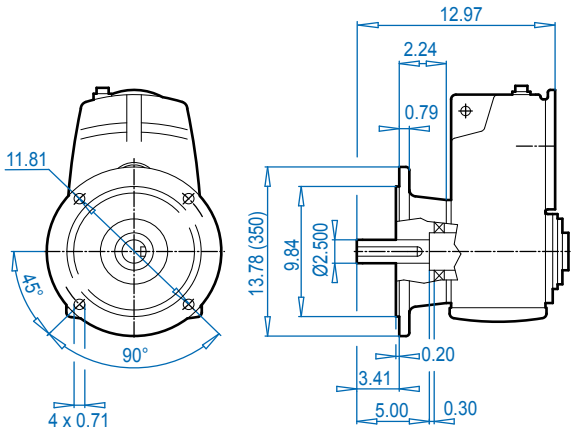

SK 5282AF

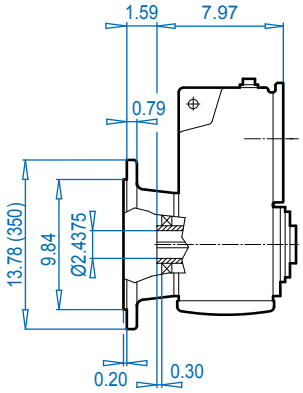

SK 5282ASH

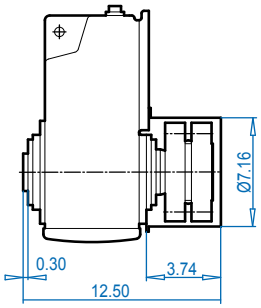

ALTERNATE SHAFTS SEE PAGES 388 - 393

SK 5282V

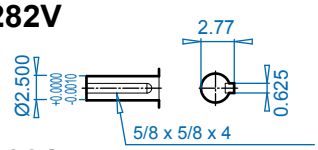

SK 5282A

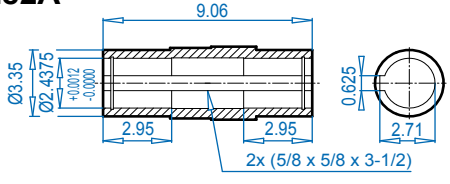

SK 5282AB ⇨📖 394

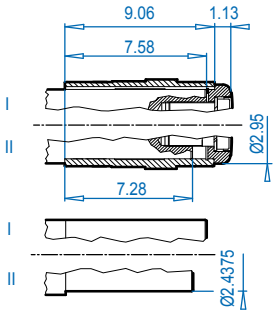

SK 5282AS ⇨📖 391

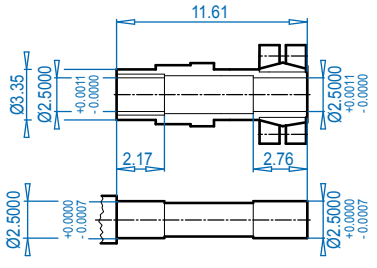

NEMA Dimensions

Type	AJ1	AK1	BB1	BD1	BF1	U1	V1	UY1	Y1	C	C1	CC
56C	5.88	4.500	0.18	6.54	0.43	0.625	2.06	0.71	0.188	17.29	12.29	4.30
140TC	5.88	4.500	0.18	6.54	0.43	0.875	2.12	0.96	0.188	17.29	12.29	4.30
180TC	7.25	8.500	0.23	9.17	0.59	1.125	2.62	1.24	0.250	20.89	15.89	7.90
210TC	7.25	8.500	0.39	9.17	0.59	1.375	3.12	1.52	0.312	20.89	15.89	7.90
250TC	7.25	8.500	0.23	9.17	0.59	1.625	3.75	1.80	0.375	20.89	15.89	7.90
280TC	9.00	10.500	0.23	13.78	0.59	1.875	4.38	2.03	0.500	21.53	16.53	8.54

Send Quote Requests to info@automatedpt.com
Call +1(800)985-6929 To Order or Order Online At Nordgearmotors.com

SK 5382 + Motor





DRIVESYSTEMS

SK 5382V

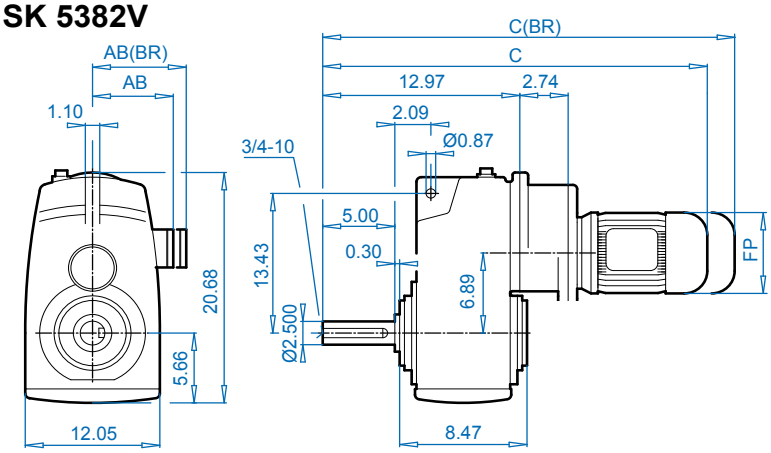

SK 5382A

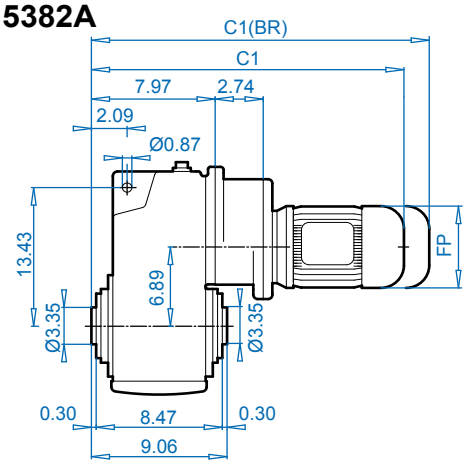

SK 5382VF

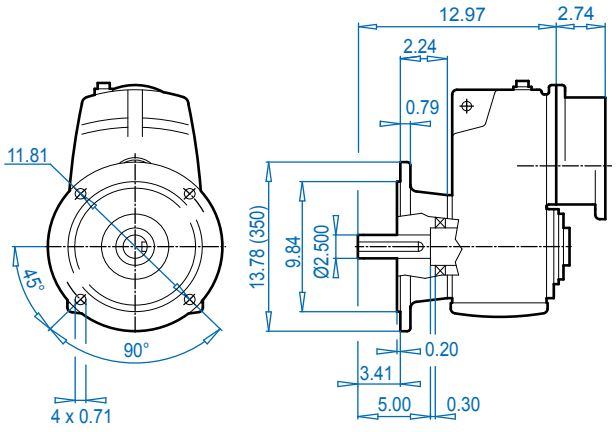

SK 5382AF

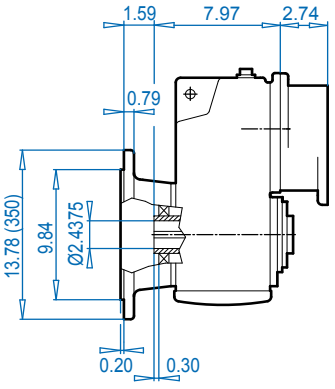

ALTERNATE SHAFTS SEE PAGES 388 - 393

SK 5382V

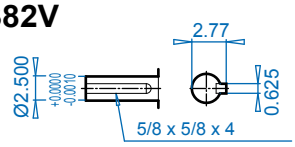

SK 5382A

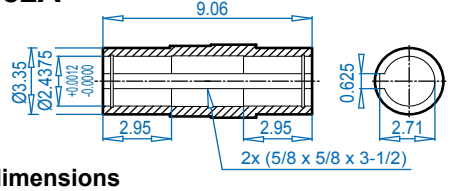

SK 5382**AB** ⇨📖 394

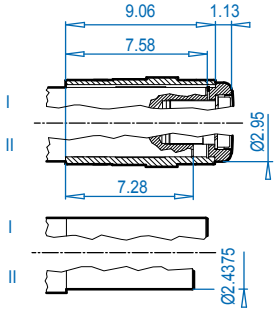

Motor dimensions

Standard efficiency	80S/L	90S/L	100L		132S/M	For Other Connection Possibilities please see ⇨📖 376 & 378
Energy efficiency	80LH	90SH/LH	100LH	112MH	132SH/MH	
AB	5.59	5.79	6.65	7.05	8.03	
AB (BR)	5.63	5.83	6.26	6.69	7.72	
C1	20.75	22.36	23.54	24.45	27.84	
C1 (BR)	23.27	25.32	27.13	28.11	32.05	
C	25.75	27.36	28.54	29.45	32.84	
C (BR)	28.27	30.32	32.13	33.11	37.05	
FP	6.14	6.92	7.63	8.58	10.16	

(BR) denotes Brakemotor

Send Quote Requests to info@automatedpt.com
Call +1(800)985-6929 To Order or Order Online At Nordgearmotors.com

DRIVESYSTEMS





SK 5382 + NEMA

SK 5382V

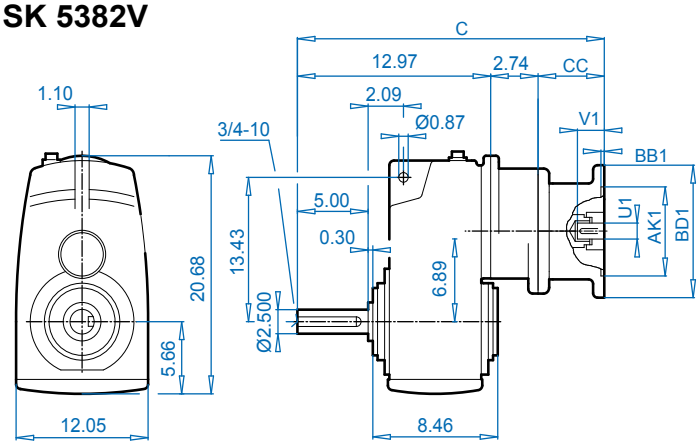

SK 5382A

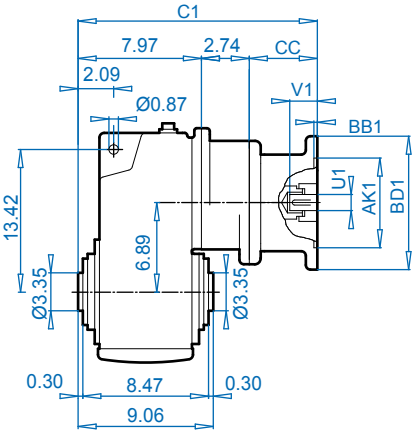

NEMA Input

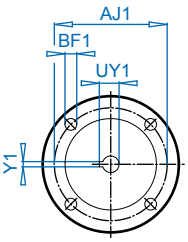

Dimensions in Inches
DIMENSIONS

SK 5382VF

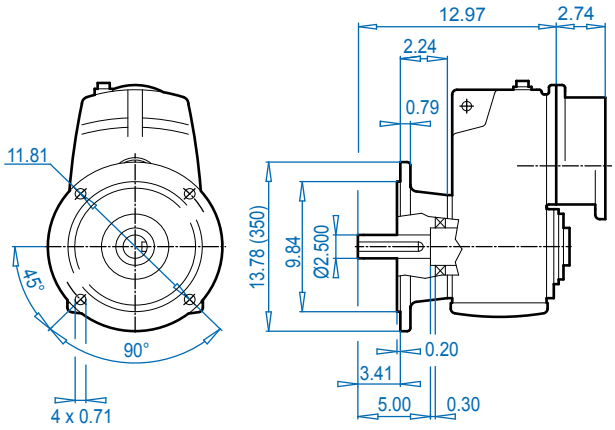

SK 5382AF

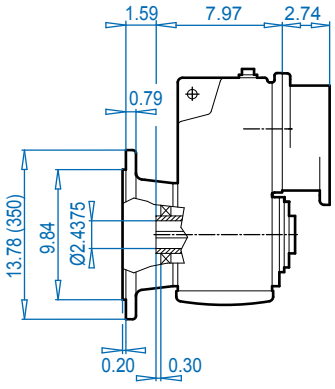

SK 5382V

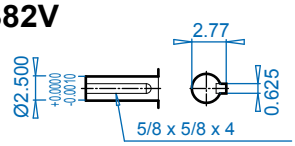

SK 5382A

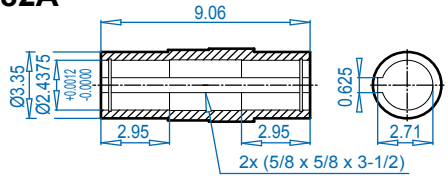

SK 5382AB ⇨🕮 394

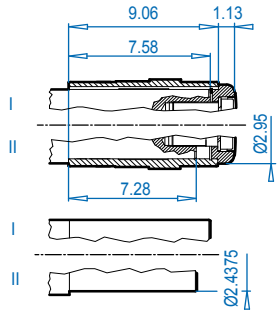

ALTERNATE SHAFTS SEE PAGES 388 - 393

NEMA Dimensions

Type	AJ1	AK1	BB1	BD1	BF1	U1	V1	UY1	Y1	C	C1	CC
56C	5.88	4.500	0.18	6.54	0.43	0.625	2.06	0.71	0.188	20.31	15.31	4.60
140TC	5.88	4.500	0.18	6.54	0.43	0.875	2.12	0.96	0.188	20.31	15.31	4.60
180TC	7.25	8.500	0.23	9.17	0.59	1.125	2.62	1.24	0.250	22.31	17.31	6.60
210TC	7.25	8.500	0.39	9.17	0.59	1.375	3.12	1.52	0.312	22.31	17.31	6.60

Send Quote Requests to info@automatedpt.com
Call +1(800)985-6929 To Order or Order Online At Nordgearmotors.com

SK 6282 + Motor



DRIVESYSTEMS

DIMENSIONS

Dimensions in Inches

SK 6282V

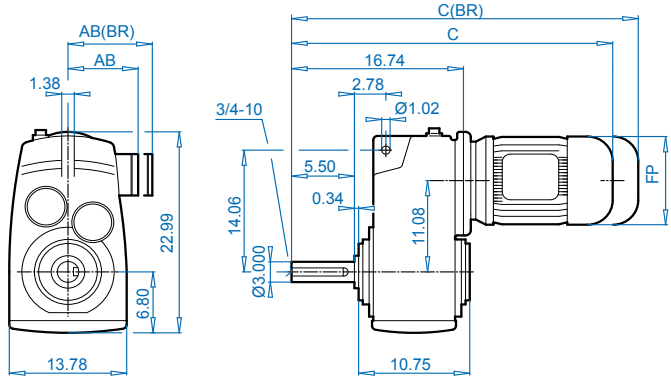

SK 6282A

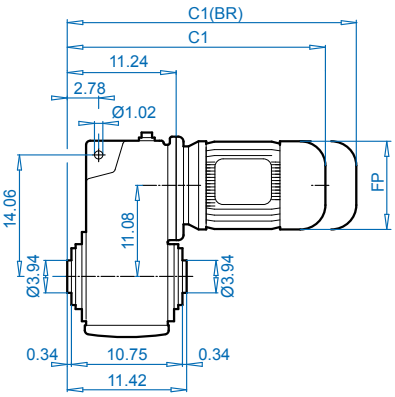

SK 6282VF

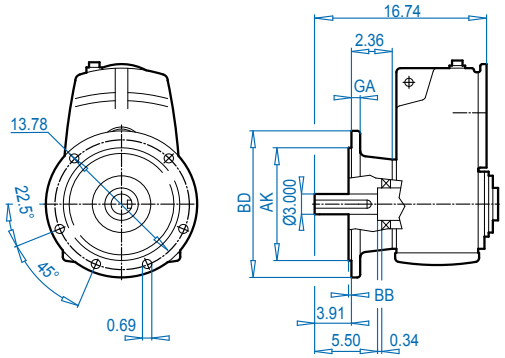

SK 6282AF

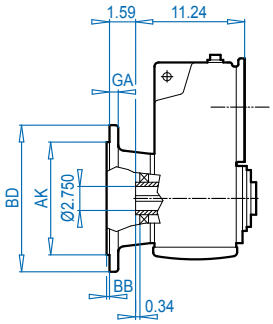

SK 6282ASH

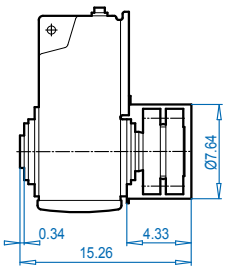

SK 6282V

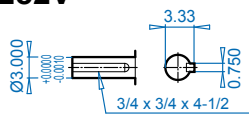

SK 6282A

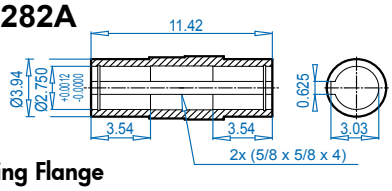

SK 6282**AB** ⇨🕮 394

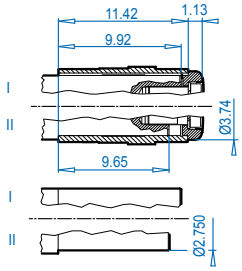

SK 6282**AS** ⇨🕮 391

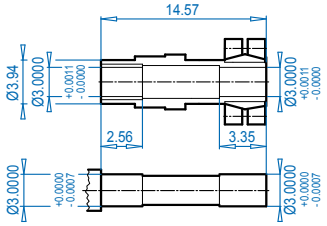

Mounting Flange

BD (mm)	AJ	AK	BB	BF	GA
15.75 (400)	13.78	11.81 +0.0000 -0.0013	0.20	0.69	0.79
17.72 (450)	15.75	13.78 +0.0000 -0.0014	0.20	0.69	0.87

Motor dimensions

Standard eff.	100L		132S/M	160M/L		180MX/LX		200L	225S/M			For Other Connection Possibilities please see ⇨🕮 376 & 378
Energy eff.	100LH	112MH	132SH/MH	160MH	160LH		180MH/LH	200LH		225SH	225MH	
AB	6.65	7.05	8.03	8.90	8.90	8.90	10.20	12.05	12.05	12.80	12.80	
AB (BR)	6.26	6.69	7.72	8.90	8.90	8.90	10.20	12.05	12.05	-	-	
C1	23.35	24.13	28.43	30.12	31.69	31.69	35.00	38.39	38.39	38.27	38.27	
C1 (BR)	26.93	27.79	32.64	36.69	38.43	38.43	39.13	44.96	44.96	-	-	
C	28.85	29.63	33.93	35.62	37.19	37.19	40.50	43.89	43.89	43.77	43.77	
C (BR)	32.43	33.29	38.14	42.19	43.93	43.93	44.63	50.46	50.46	-	-	
FP	7.63	8.58	10.16	12.60	12.60	12.60	14.09	15.67	15.67	17.52	17.52	

(BR) denotes Brakemotor

ALTERNATE SHAFTS SEE PAGES 388 - 393

Send Quote Requests to info@automatedpt.com
Call +1(800)985-6929 To Order or Order Online At Nordgearmotors.com

DRIVESYSTEMS





SK 6282 + NEMA

SK 6282V

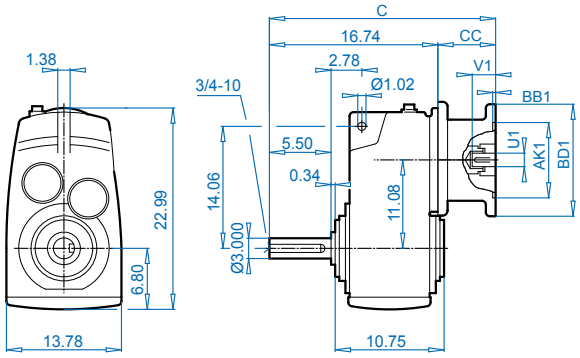

SK 6282A

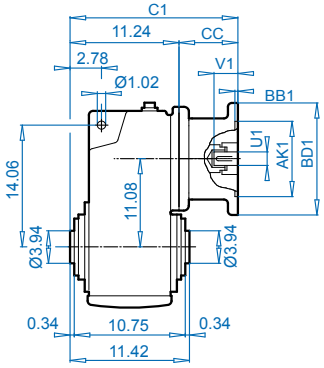

NEMA Input

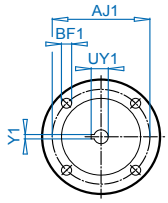

Dimensions in Inches
DIMENSIONS

SK 6282VF

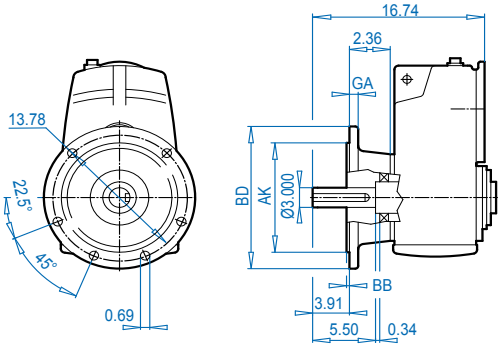

SK 6282AF

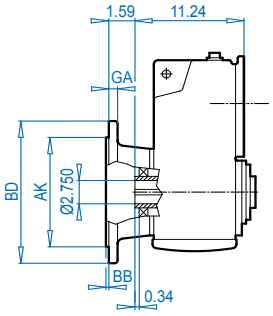

SK 6282ASH

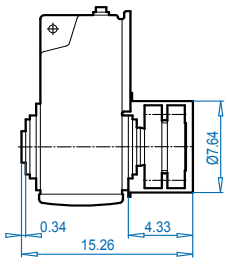

SK 6282V

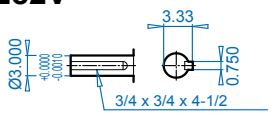

SK 6282A

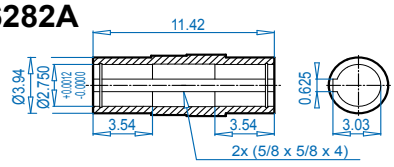

SK 6282AB ⇨🕮 394

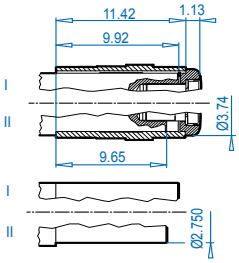

SK 6282AS ⇨🕮 391

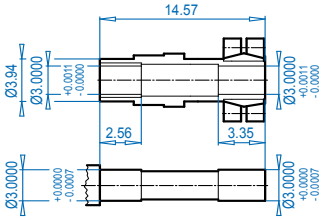

ALTERNATE SHAFTS SEE PAGES 388 - 393

Mounting Flange

BD (mm)	AJ	AK	BB	BF	GA
15.75 (400)	13.78	11.81 +0.0000 -0.0013	0.20	0.69	0.79
17.72 (450)	15.75	13.78 +0.0000 -0.0014	0.20	0.69	0.87

NEMA Dimensions

Type	AJ1	AK1	BB1	BD1	BF1	U1	V1	UY1	Y1	C	C1	CC
180TC	7.25	8.500	0.23	9.17	0.59	1.125	2.62	1.24	0.250	24.30	18.80	7.50
210TC	7.25	8.500	0.39	9.17	0.59	1.375	3.12	1.52	0.312	24.30	18.80	7.50
250TC	7.25	8.500	0.23	9.17	0.59	1.625	3.75	1.80	0.375	28.18	22.68	11.38
280TC	9.00	10.500	0.23	13.78	0.55	1.875	4.38	2.10	0.500	28.18	22.68	11.38
320TC	11.00	12.500	0.23	13.78	0.71	2.125	5.00	2.35	0.500	27.15	21.65	10.35
360TC	11.00	12.500	0.16	17.72	0.71	2.375	5.62	2.65	0.625	30.07	24.57	13.27

Send Quote Requests to info@automatedpt.com
Call +1(800)985-6929 To Order or Order Online At Nordgearmotors.com

SK 6382 + Motor




DRIVESYSTEMS

DIMENSIONS — Dimensions in Inches

SK 6382V

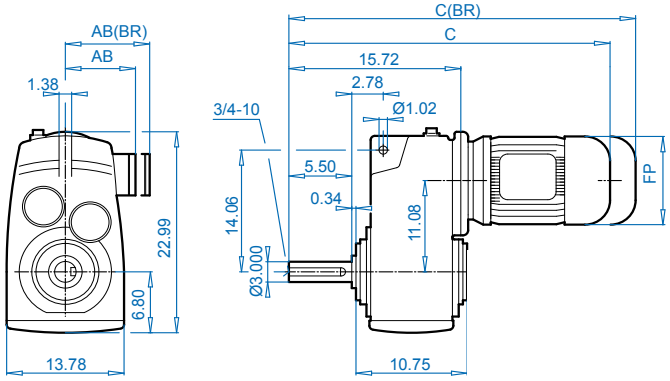

SK 6382A

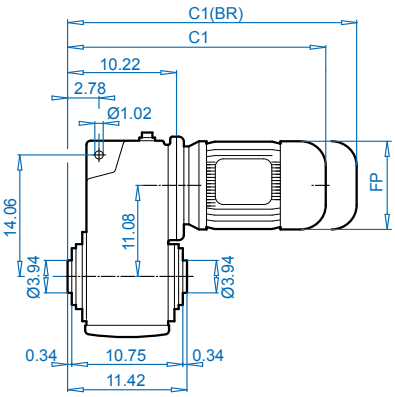

SK 6382VF

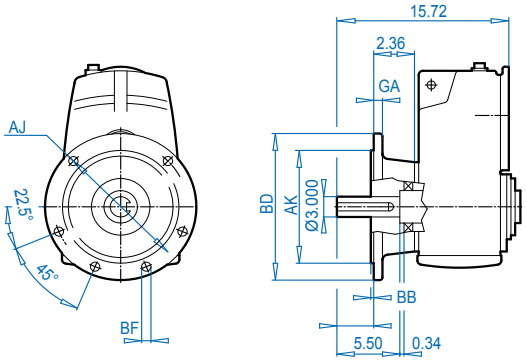

SK 6382AF

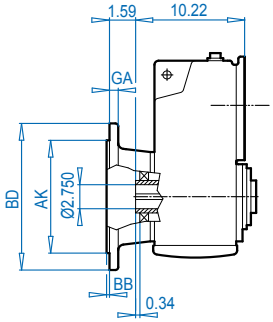

SK 6382ASH

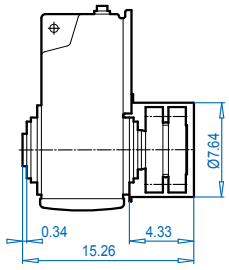

SK 6382V

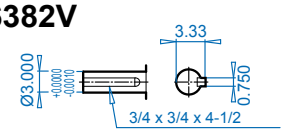

SK 6382A

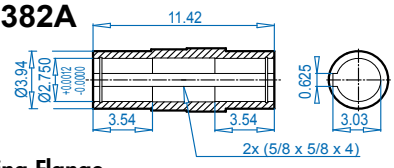

SK 6382AB ⇨🕮 394

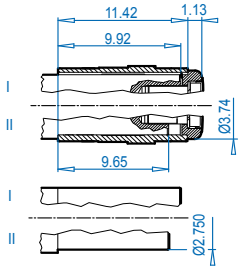

SK 6382AS ⇨🕮 391

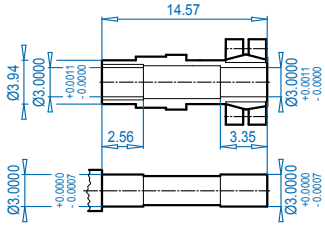

ALTERNATE SHAFTS SEE PAGES 388 - 393

Mounting Flange

BD (mm)	AJ	AK	BB	BF	GA
15.75 (400)	13.78	11.81 +0.0000 -0.0013	0.20	0.69	0.79
17.72 (450)	15.75	13.78 +0.0000 -0.0014	0.20	0.69	0.87

Motor dimensions

Standard eff.	90S/L	100L		132S/M	160M/L		180MX/LX		For Other Connection Possibilities please see ⇨🕮 376 & 378
Energy eff.	90SH/LH	100LH	112MH	132SH/MH	160MH	160LH		180MH/LH	
AB	5.79	6.65	7.05	8.03	8.90	8.90	8.90	10.20	
AB (BR)	5.83	6.26	6.69	7.72	8.90	8.90	8.90	10.20	
C1	21.15	22.33	23.23	26.62	29.10	30.67	30.67	34.77	
C1 (BR)	24.10	25.91	26.89	30.83	35.67	37.41	37.41	38.90	
C	26.65	27.83	28.73	32.12	34.60	36.17	36.17	40.27	
C (BR)	29.60	31.41	32.39	36.33	41.17	42.91	42.91	44.40	
FP	6.92	7.63	8.58	10.16	12.60	12.60	12.60	14.09	

(BR) denotes Brakemotor

Send Quote Requests to info@automatedpt.com
Call +1(800)985-6929 To Order or Order Online At Nordgearmotors.com

DRIVESYSTEMS





SK 6382 + NEMA

SK 6382V

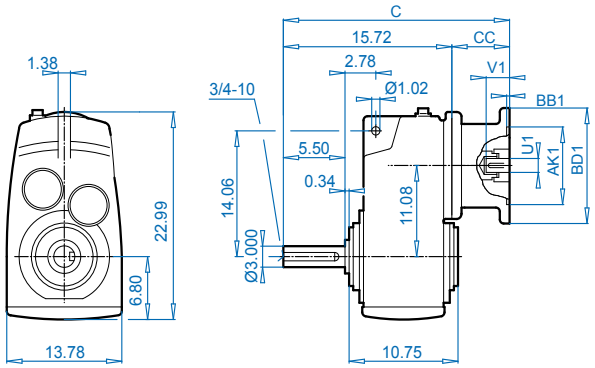

SK 6382A

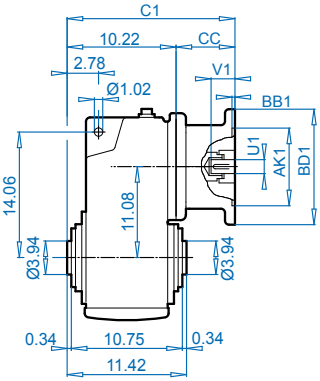

NEMA Input

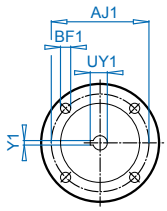

DIMENSIONS

Dimensions in Inches

SK 6382VF

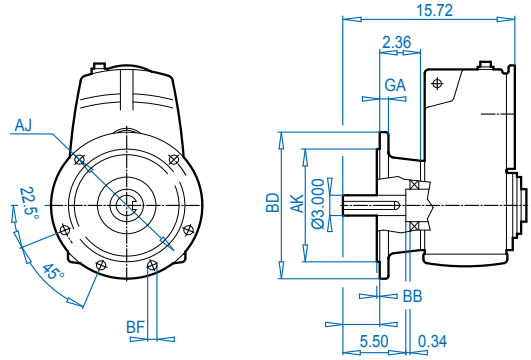

SK 6382AF

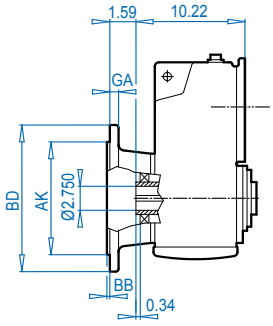

SK 6382ASH

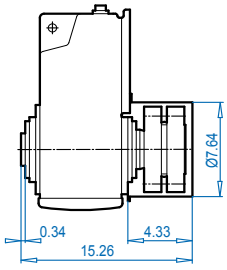

SK 6382V

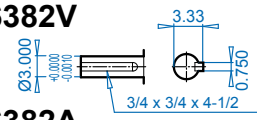

SK 6382A

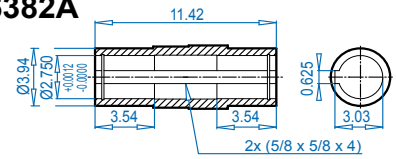

SK 6382AB ⇨🕮 394

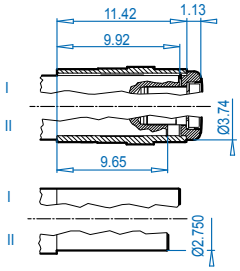

SK 6382AS ⇨🕮 391

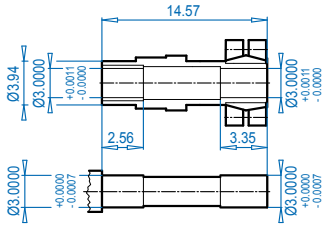

ALTERNATE SHAFTS SEE PAGES 388 - 393

Mounting Flange

BD (mm)	AJ	AK	BB	BF	GA
15.75 (400)	13.78	11.81 +0.0000 -0.0013	0.20	0.69	0.79
17.72 (450)	15.75	13.78 +0.0000 -0.0014	0.20	0.69	0.87

NEMA Dimensions

Type	AJ1	AK1	BB1	BD1	BF1	U1	V1	UY1	Y1	C	C1	CC
56C	5.88	4.500	0.18	6.54	0.43	0.625	2.06	0.71	0.188	20.08	14.58	4.30
140TC	5.88	4.500	0.18	6.54	0.43	0.875	2.12	0.96	0.188	20.08	14.58	4.30
180TC	7.25	8.500	0.23	9.17	0.59	1.125	2.62	1.24	0.250	23.68	18.18	7.90
210TC	7.25	8.500	0.23	9.17	0.59	1.375	3.12	1.52	0.312	23.68	18.18	7.90
250TC	7.25	8.500	0.23	9.17	0.59	1.625	3.75	1.80	0.375	23.68	18.18	7.90
280TC	9.00	10.500	0.23	13.78	0.55	1.875	4.38	2.10	0.500	24.32	18.82	8.54

Send Quote Requests to info@automatedpt.com
Call +1(800)985-6929 To Order or Order Online At Nordgearmotors.com

SK 7282 + Motor




DRIVESYSTEMS

DIMENSIONS — Dimensions in Inches

SK 7282V

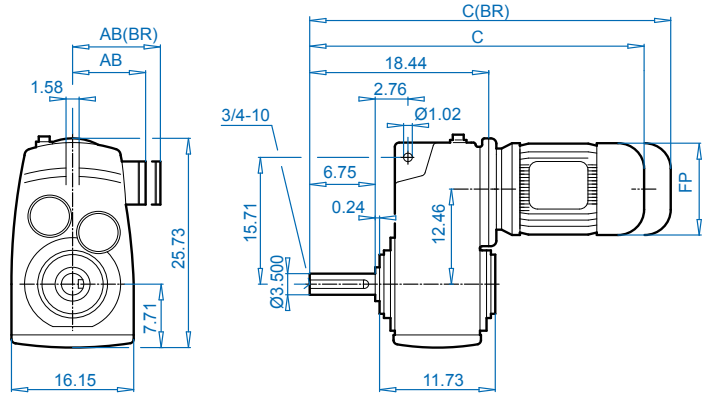

SK 7282A

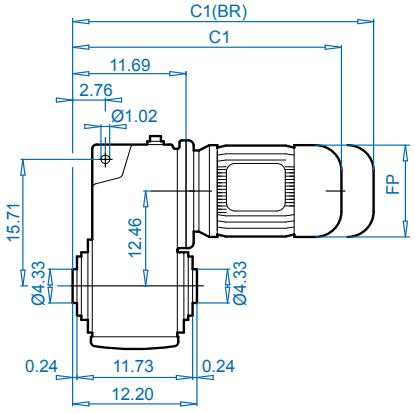

SK 7282VF

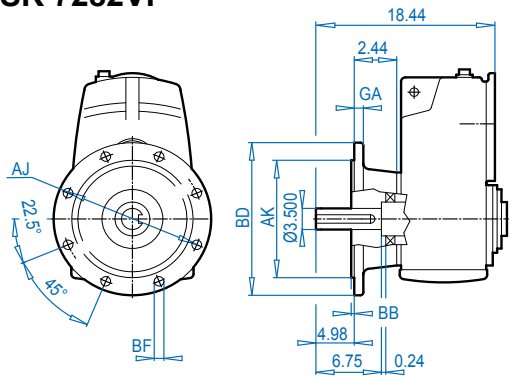

SK 7282AF

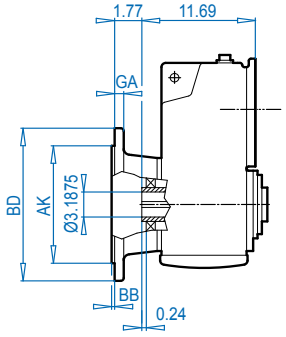

SK 7282ASH

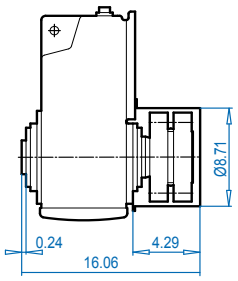

SK 7282V

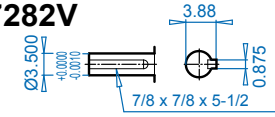

SK 7282A

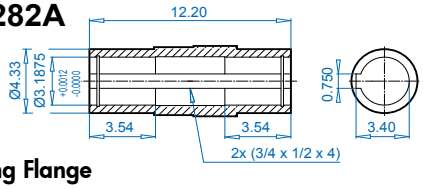

SK 7282AB ⇨📖 394

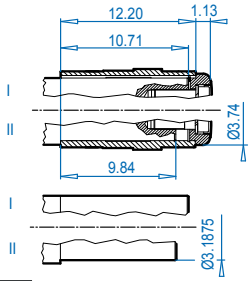

SK 7282AS ⇨📖 391

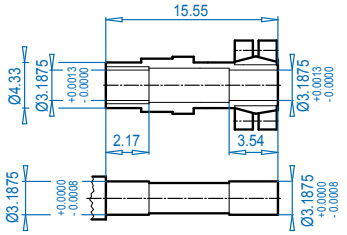

ALTERNATE SHAFTS SEE PAGES 388 - 393

Mounting Flange

BD (mm)	AJ	AK	BB	BF	GA
17.72 (450)	15.75	13.78 +0.0000 -0.0014	0.20	0.71	0.87
21.65 (550)	19.69	17.72 +0.0000 -0.0016	0.20	0.71	1.10

Motor dimensions

Standard eff.	132S/M	160M/L		180MX/LX		200L	225S/M			For Other Connection Possibilities please see ⇨📖 377 & 379
Energy eff.	132SH/MH	160MH	160LH		180MH/LH	200LH		225SH	225MH	
AB	8.03	8.90	8.90	8.90	10.20	12.05	12.05	12.80	12.80	
AB (BR)	7.72	8.90	8.90	8.90	10.20	12.05	12.05	-	-	
C1	28.86	30.55	32.12	32.12	35.43	38.82	38.82	38.70	38.70	
C1 (BR)	33.07	37.12	38.86	38.86	39.56	45.39	45.39	-	-	
C	35.61	37.30	38.87	38.87	42.18	45.57	45.57	45.45	45.45	
C (BR)	39.82	43.87	45.61	45.61	46.31	52.14	52.14	-	-	
FP	10.16	12.60	12.60	12.60	14.09	15.67	15.67	17.52	17.52	

(BR) denotes Brakemotor

Send Quote Requests to info@automatedpt.com
Call +1(800)985-6929 To Order or Order Online At Nordgearmotors.com

DRIVESYSTEMS





SK 7282 + NEMA

SK 7282V

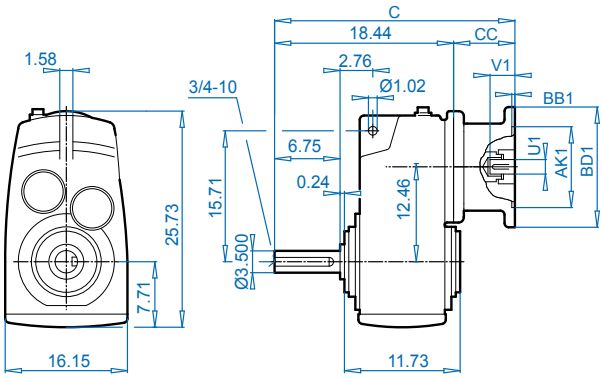

SK 7282A

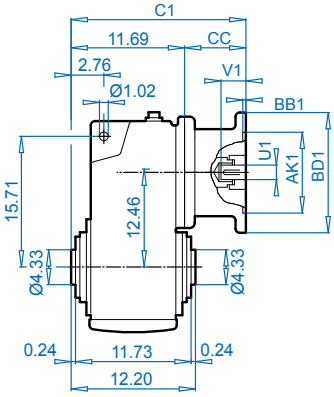

NEMA Input

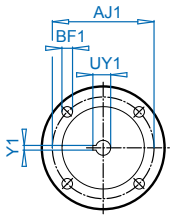

Dimensions in Inches
DIMENSIONS

SK 7282VF

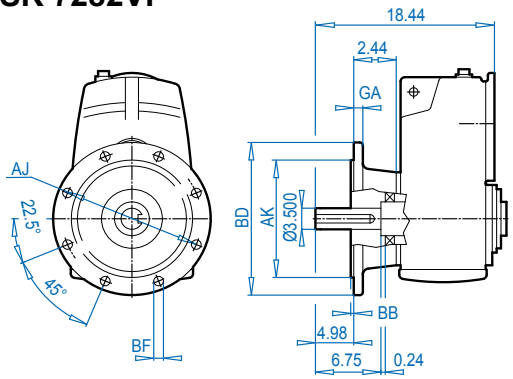

SK 7282AF

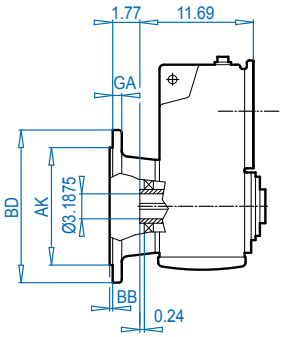

SK 7282ASH

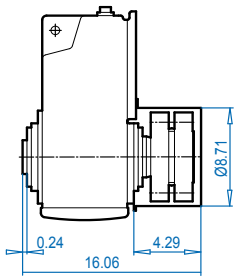

SK 7282V

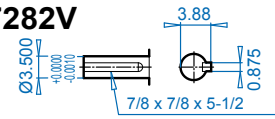

SK 7282A

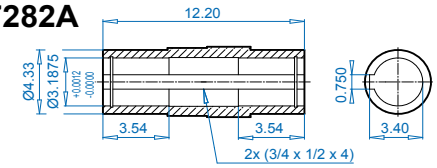

SK 7282AB ⇨ 394

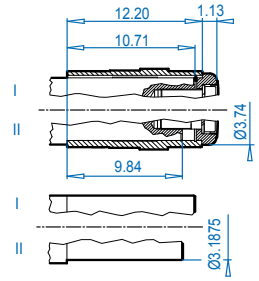

SK 7282AS ⇨ 391

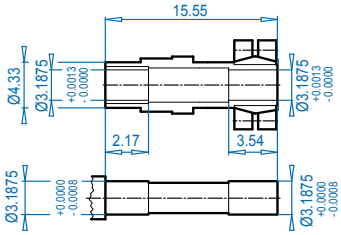

ALTERNATE SHAFTS SEE PAGES 388 - 393

Mounting Flange

BD (mm)	AJ	AK	BB	BF	GA
17.72 (450)	15.75	13.78 +0.0000 -0.0014	0.20	0.71	0.87
21.65 (550)	19.69	17.72 +0.0000 -0.0016	0.20	0.71	1.10

NEMA Dimensions

Type	AJ1	AK1	BB1	BD1	BF1	U1	V1	UY1	Y1	C	C1	CC
180TC	7.25	8.500	0.23	9.17	0.59	1.125	2.62	1.24	0.250	25.98	19.23	7.50
210TC	7.25	8.500	0.39	9.17	0.59	1.375	3.12	1.52	0.312	25.98	19.23	7.50
250TC	7.25	8.500	0.23	9.17	0.59	1.625	3.75	1.80	0.375	29.86	23.11	11.38
280TC	9.00	10.500	0.23	13.78	0.59	1.875	4.38	2.03	0.500	29.86	23.11	11.38
320TC	11.00	12.500	0.23	13.78	0.71	2.125	5.00	2.35	0.500	28.83	22.08	10.35
360TC	11.00	12.500	0.16	17.72	0.71	2.375	5.62	2.65	0.625	31.75	25.00	13.27

Send Quote Requests to info@automatedpt.com
Call +1(800)985-6929 To Order or Order Online At Nordgearmotors.com

SK 7382 + Motor



DRIVESYSTEMS

SK 7382V

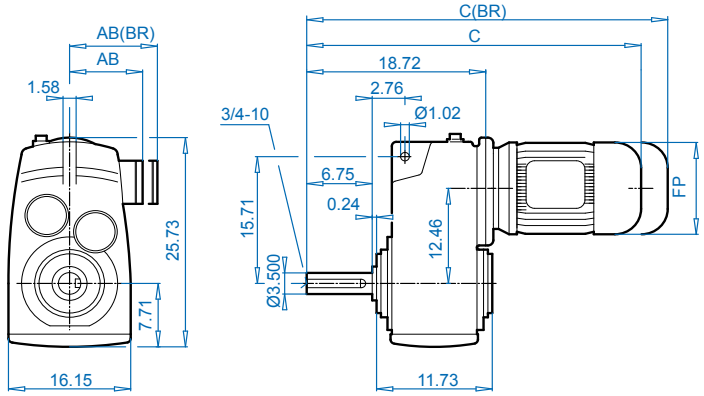

SK 7382A

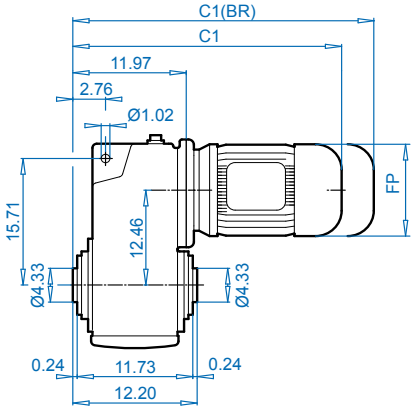

SK 7382VF

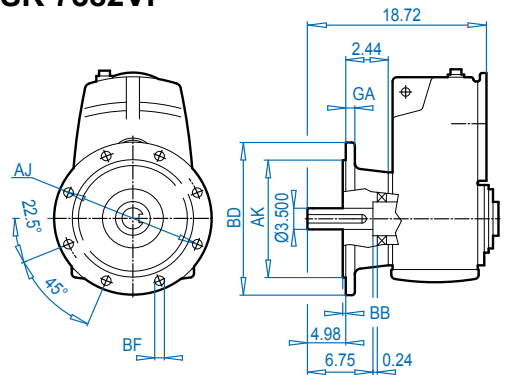

SK 7382AF

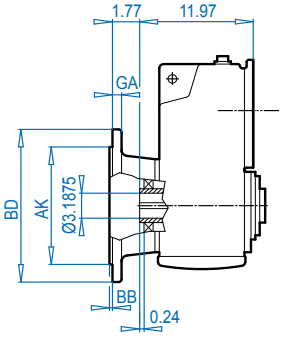

SK 7382ASH

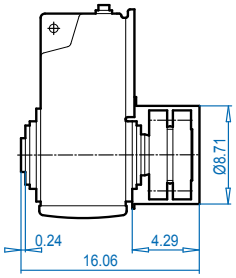

SK 7382V

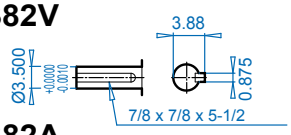

SK 7382A

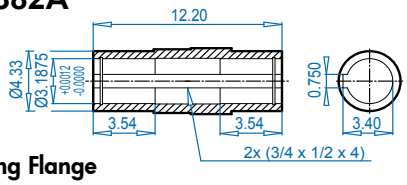

SK 7382AB ⇨📖 394

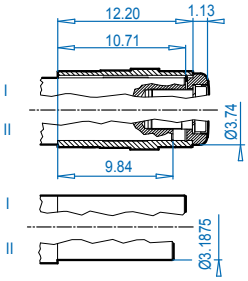

SK 7382AS ⇨📖 391

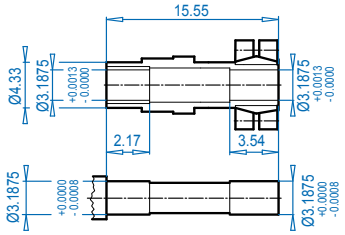

Mounting Flange

BD (mm)	AJ	AK	BB	BF	GA
17.72 (450)	15.75	13.78 +0.0000 -0.0014	0.20	0.71	0.87
21.65 (550)	19.69	17.72 +0.0000 -0.0016	0.20	0.71	1.10

Motor dimensions

Standard eff.	100L		132S/M	160M/L		180MX/LX		200L	225S/M			For Other Connection Possibilities please see ⇨📖 377 & 379
Energy eff.	100LH	112MH	132SH/MH	160MH	160LH		180MH/LH	200LH		225SH	225MH	
AB	6.65	7.05	8.03	8.90	8.90	8.90	10.20	12.05	12.05	12.80	12.80	
AB (BR)	6.26	6.69	7.72	8.90	8.90	8.90	10.20	12.05	12.05	-	-	
C1	24.06	24.84	29.14	30.83	32.40	32.40	35.71	39.10	39.10	38.98	38.98	
C1 (BR)	27.64	28.50	33.35	37.40	39.14	39.14	39.84	45.67	45.67	-	-	
C	28.85	29.63	33.93	35.62	37.19	37.19	40.50	43.89	43.89	43.77	43.77	
C (BR)	30.81	31.59	35.89	37.58	39.15	39.15	42.46	45.85	45.85	45.73	45.73	
FP	7.63	8.58	10.16	12.60	12.60	12.60	14.09	15.67	15.67	17.52	17.52	

(BR) denotes Brakemotor

ALTERNATE SHAFTS SEE PAGES 388 - 393

Send Quote Requests to info@automatedpt.com
Call +1(800)985-6929 To Order or Order Online At Nordgearmotors.com

DRIVESYSTEMS





SK 7382 + NEMA

SK 7382V

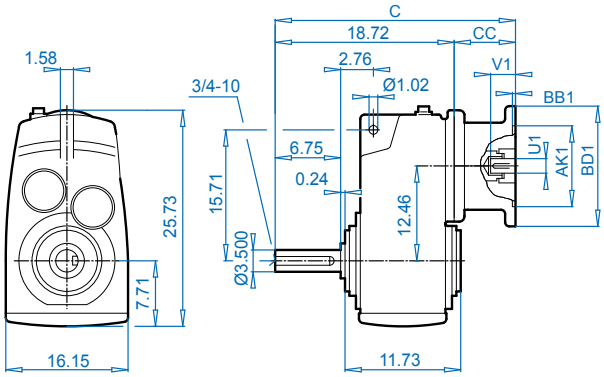

SK 7382A

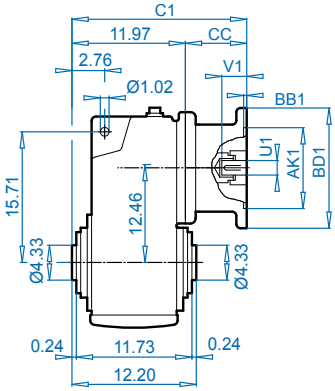

NEMA Input

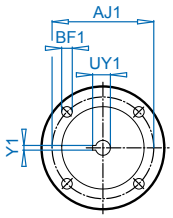

Dimensions in Inches
DIMENSIONS

SK 7382VF

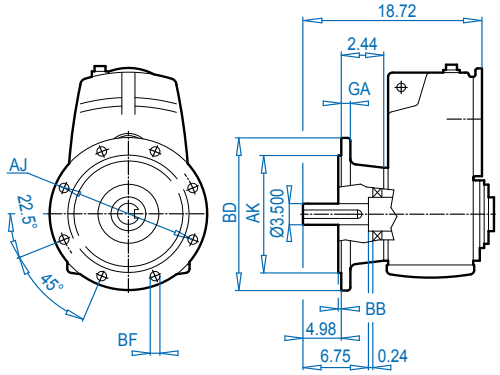

SK 7382AF

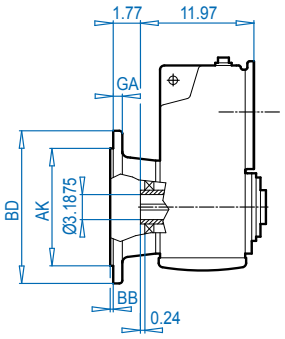

SK 7382ASH

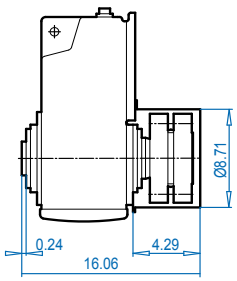

SK 7382V

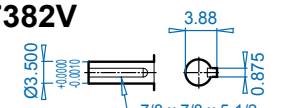

SK 7382A

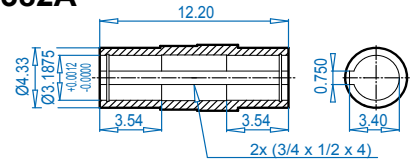

SK 7382AB ⇨🕮 394

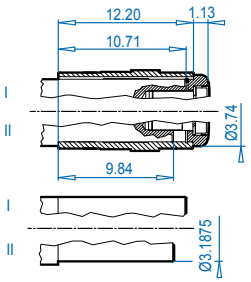

SK 7382AS ⇨🕮 391

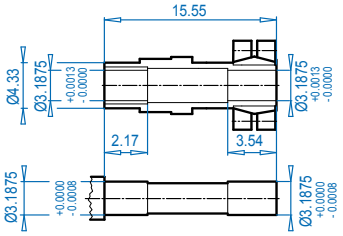

Mounting Flange

BD (mm)	AJ	AK	BB	BF	GA
17.72 (450)	15.75	13.78 +0.0000 -0.0014	0.20	0.71	0.87
21.65 (550)	19.69	17.72 +0.0000 -0.0016	0.20	0.71	1.10

NEMA Dimensions

Type	AJ1	AK1	BB1	BD1	BF1	U1	V1	UY1	Y1	C	C1	CC
180TC	7.25	8.500	0.23	9.17	0.59	1.125	2.62	1.24	0.250	26.26	19.51	7.50
210TC	7.25	8.500	0.39	9.17	0.59	1.375	3.12	1.52	0.312	26.26	19.51	7.50
250TC	7.25	8.500	0.23	9.17	0.59	1.625	3.75	1.80	0.375	30.14	23.39	11.38
280TC	9.00	10.500	0.23	13.78	0.59	1.875	4.38	2.03	0.500	30.14	23.39	11.38
320TC	11.00	12.500	0.23	13.78	0.71	2.125	5.00	2.35	0.500	29.11	22.36	10.35
360TC	11.00	12.500	0.16	17.72	0.71	2.375	5.62	2.65	0.625	32.03	25.28	13.27

ALTERNATE SHAFTS SEE PAGES 388 - 393

Send Quote Requests to info@automatedpt.com
Call +1(800)985-6929 To Order or Order Online At Nordgearmotors.com

SK 8282 + Motor





DRIVESYSTEMS

SK 8282V

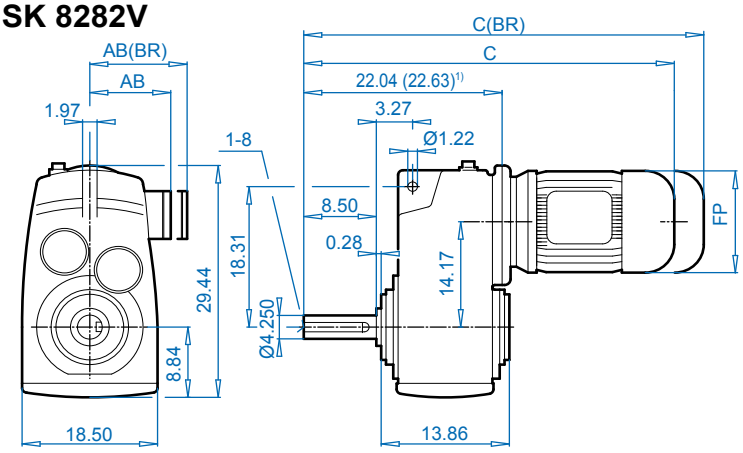

SK 8282A

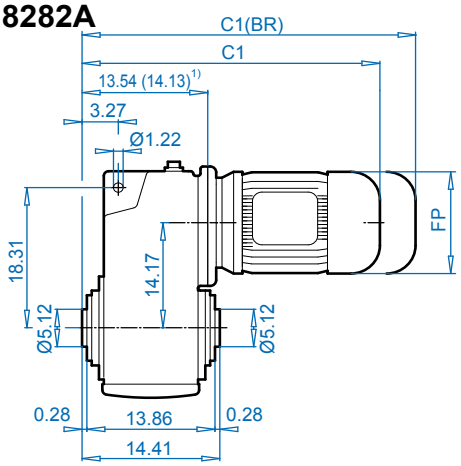

SK 8282VF

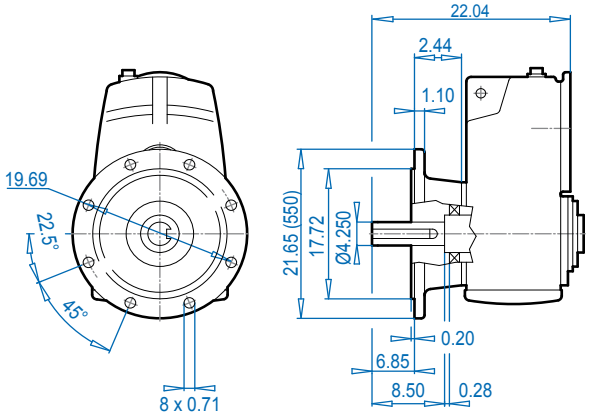

SK 8282AF

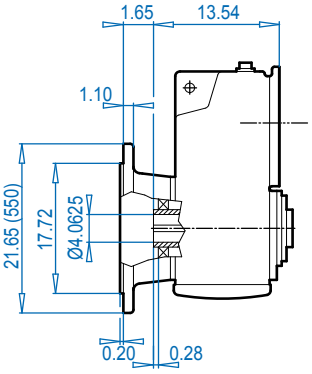

SK 8282ASH

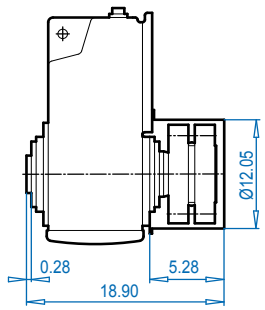

ALTERNATE SHAFTS SEE PAGES 388 - 393

SK 8282V

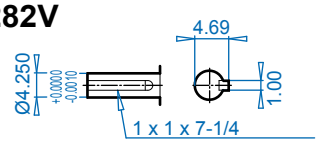

SK 8282A

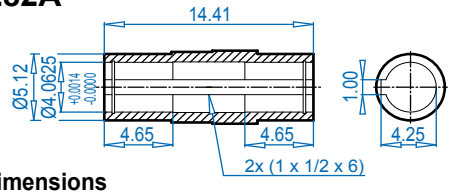

SK 8282AB ⇨📖 394

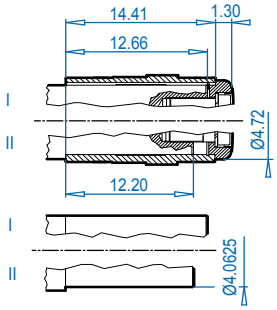

SK 8282AS ⇨📖 391

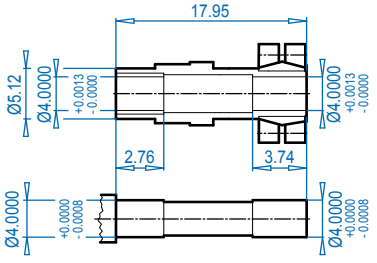

Motor dimensions

Standard eff.	132S/M	160M/L		180MX/LX		200L	225S/M			250M1)		280S1)	For Other Connection Possibilities please see ⇨📖 377 & 379
Energy eff.	132SH/MH	160MH	160LH		180MH/LH	200LH		225SH	225MH		250MH1)	280SH1)	
AB	8.03	8.90	8.90	8.90	10.20	12.05	12.05	12.80	12.80	15.43	15.43	17.01	
AB (BR)	7.72	8.90	8.90	8.90	10.20	12.05	12.05	-	-	15.43	15.43	17.01	
C1	30.71	32.40	33.97	33.97	37.28	40.67	40.67	40.55	40.55	44.09	46.85	48.23	
C1 (BR)	34.92	38.97	40.71	40.71	41.41	47.24	47.24	-	-	52.36	55.11	59.45	
C	39.21	40.90	42.47	42.47	45.78	49.17	49.17	49.05	49.05	52.59	55.35	56.73	
C (BR)	43.42	47.47	49.21	49.21	49.91	55.74	55.74	-	-	60.85	63.62	67.95	
FP	10.16	12.60	12.60	12.60	14.09	15.67	15.67	17.52	17.52	19.49	19.49	22.64	

(BR) denotes Brakemotor

Send Quote Requests to info@automatedpt.com
Call +1(800)985-6929 To Order or Order Online At Nordgearmotors.com

DRIVESYSTEMS





SK 8282 + NEMA

SK 8282V

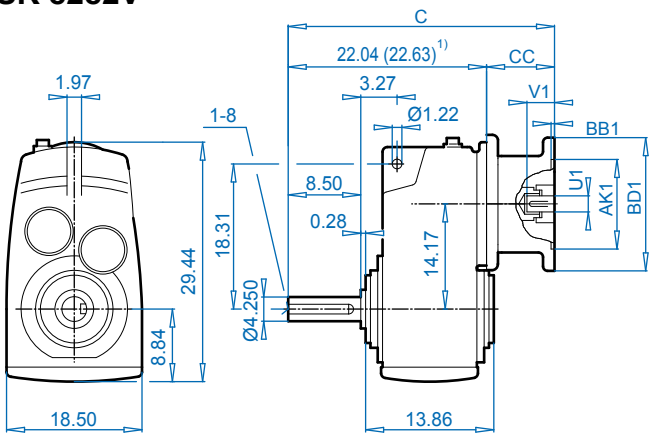

SK 8282A

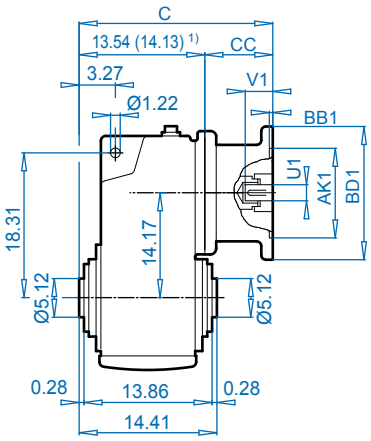

NEMA Input

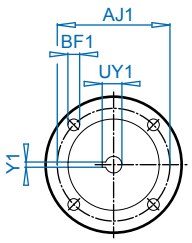

SK 8282VF

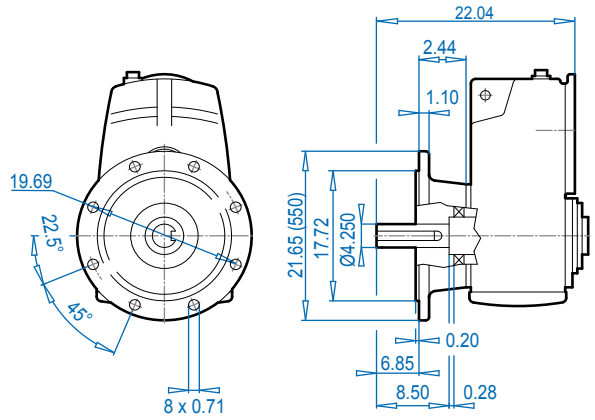

SK 8282AF

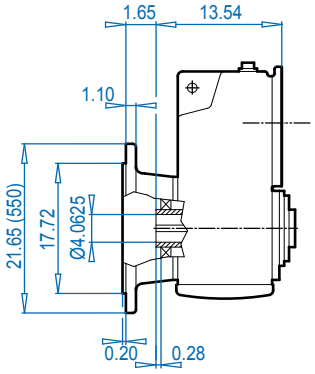

SK 8282ASH

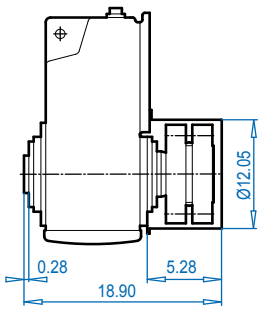

ALTERNATE SHAFTS SEE PAGES 388 - 393

SK 8282V

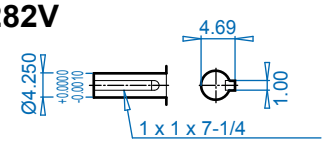

SK 8282A

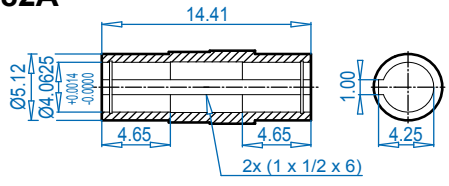

SK 8282AB ⇨🕮 394

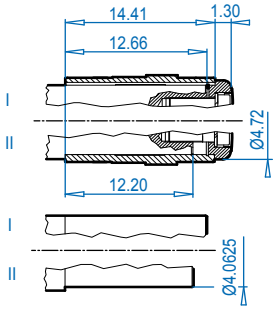

SK 8282AS ⇨🕮 391

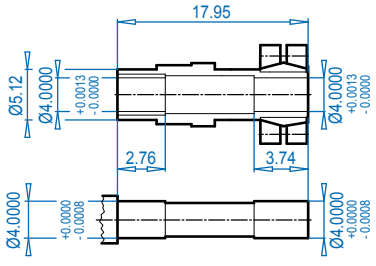

NEMA Dimensions

Type	AJ1	AK1	BB1	BD1	BF1	U1	V1	UY1	Y1	C	C1	CC
180TC	7.25	8.500	0.23	9.17	0.59	1.125	2.62	1.24	0.250	29.58	21.08	7.50
210TC	7.25	8.500	0.39	9.17	0.59	1.375	3.12	1.52	0.312	29.58	21.08	7.50
250TC	7.25	8.500	0.23	9.17	0.59	1.625	3.75	1.80	0.375	33.46	24.96	11.38
280TC	9.00	10.500	0.23	13.78	0.59	1.875	4.38	2.03	0.500	33.46	24.96	11.38
320TC	11.00	12.500	0.23	13.78	0.71	2.125	5.00	2.35	0.500	32.43	23.93	10.35
360TC[1)]	11.00	12.500	0.16	21.65	0.71	2.375	5.62	2.65	0.625	35.35	26.85	13.27

Send Quote Requests to info@automatedpt.com
Call +1(800)985-6929 To Order or Order Online At Nordgearmotors.com

SK 8382 + Motor





DRIVESYSTEMS

SK 8382V

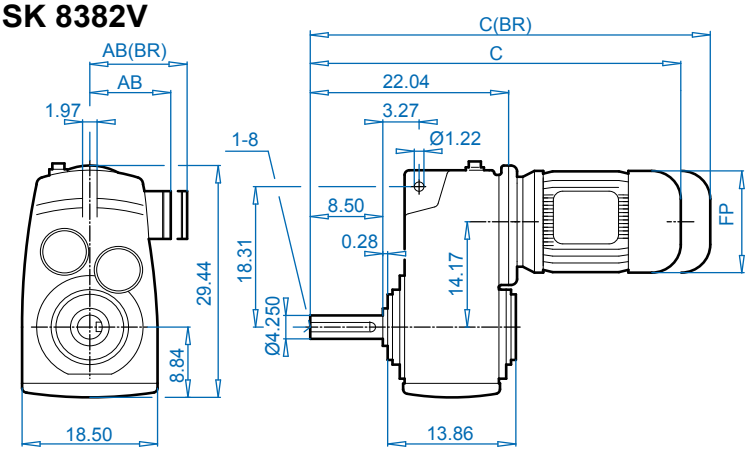

SK 8382A

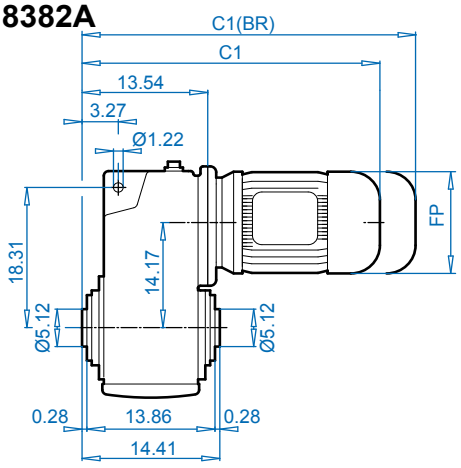

SK 8382VF

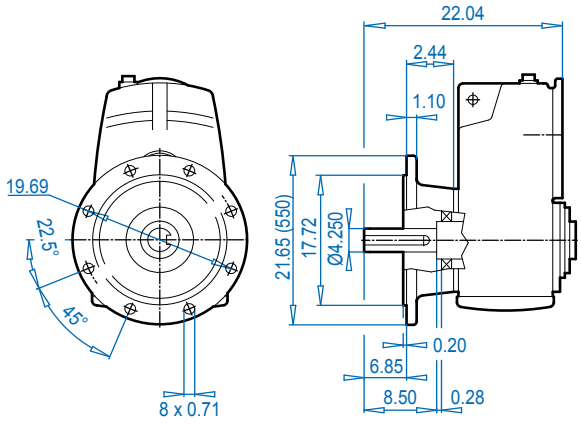

SK 8382AF

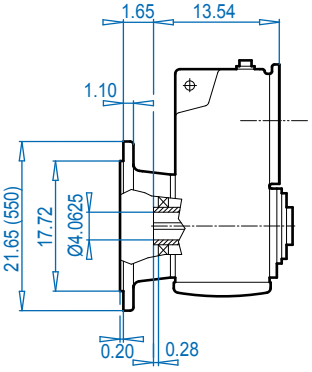

SK 8382ASH

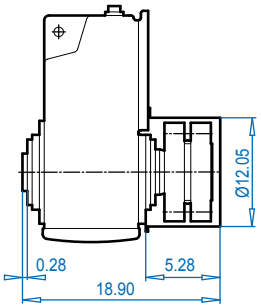

ALTERNATE SHAFTS SEE PAGES 388 - 393

SK 8382V

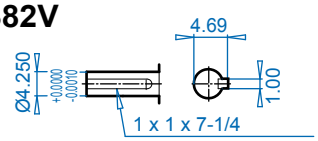

SK 8382A

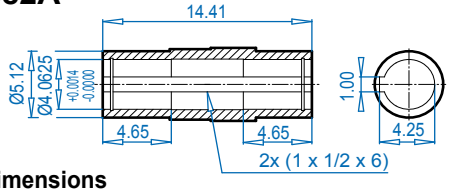

SK 8382AB ⇨🕮 394

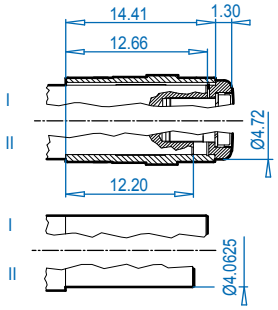

SK 8382AS ⇨🕮 391

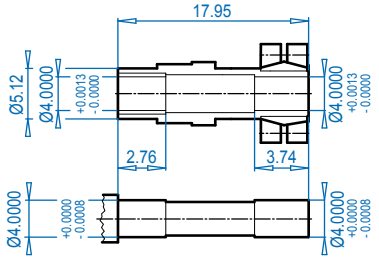

Motor dimensions

Standard eff.	100L		132S/M	160M/L		180MX/LX		200L	225S/M			For Other Connection Possibilities please see ⇨🕮 377 & 379
Energy eff.	100LH	112MH	132SH/MH	160MH	160LH		180MH/LH	200LH		225SH	225MH	
AB	6.65	7.05	8.03	8.90	8.90	8.90	10.20	12.05	12.05	12.80	12.80	
AB (BR)	6.26	6.69	7.72	8.90	8.90	8.90	10.20	12.05	12.05	-	-	
C1	25.63	26.41	30.71	32.40	33.97	33.97	37.28	40.67	40.67	40.55	40.55	
C1 (BR)	29.21	30.07	34.92	38.97	40.71	40.71	41.41	47.24	47.24	-	-	
C	34.13	34.91	39.21	40.90	42.47	42.47	45.78	49.17	49.17	49.05	49.05	
C (BR)	37.71	38.57	43.42	47.47	49.21	49.21	49.21	55.74	55.74	-	-	
FP	7.63	8.58	10.16	12.60	12.60	12.60	14.09	15.67	15.67	17.52	17.52	

(BR) denotes Brakemotor

Send Quote Requests to info@automatedpt.com
Call +1(800)985-6929 To Order or Order Online At Nordgearmotors.com

DRIVESYSTEMS





SK 8382 + NEMA

SK 8382V

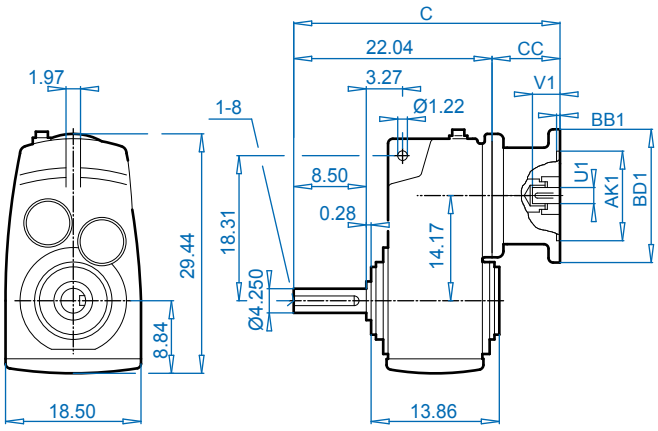

SK 8382A

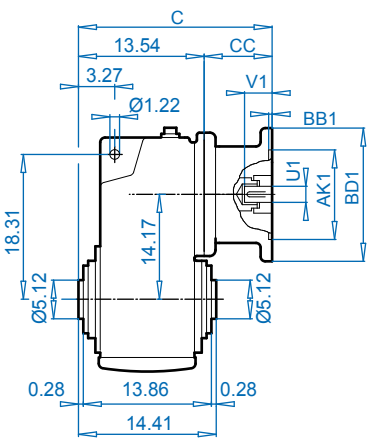

NEMA Input

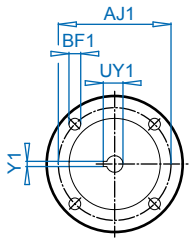

Dimensions in Inches
DIMENSIONS

SK 8382VF

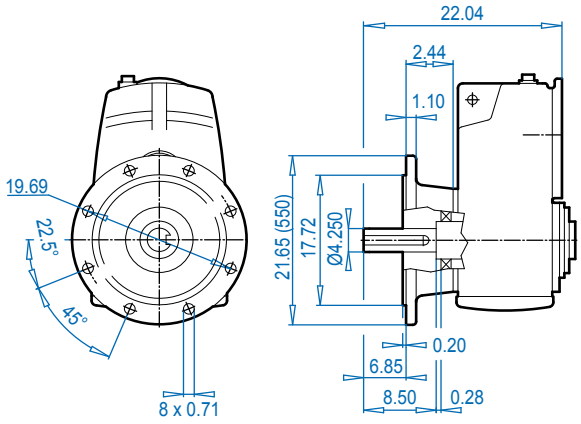

SK 8382AF

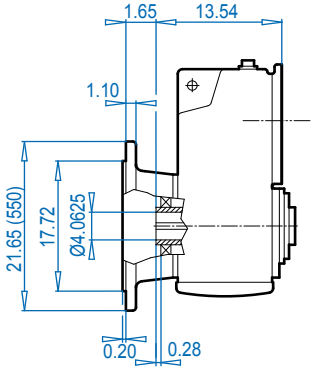

SK 8382ASH

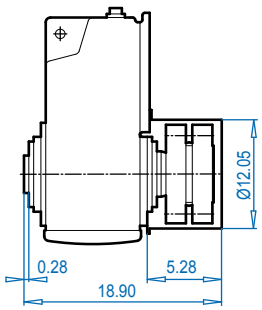

ALTERNATE SHAFTS SEE PAGES 388 - 393

SK 8382V

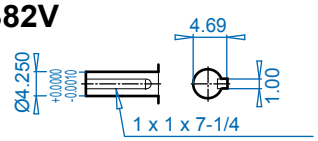

SK 8382A

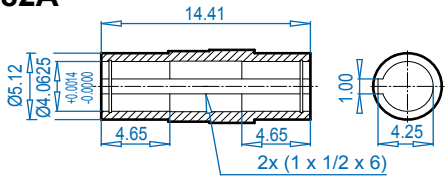

SK 8382AB ⇨📖 394

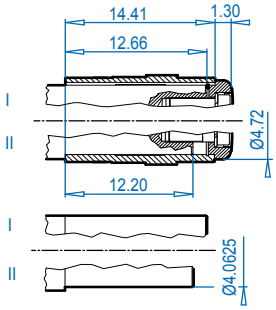

SK 8382AS ⇨📖 391

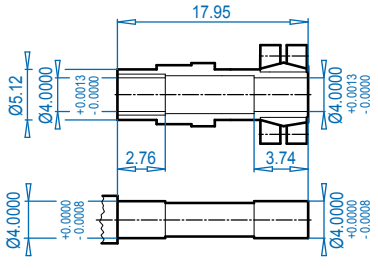

NEMA Dimensions

Type	AJ1	AK1	BB1	BD1	BF1	U1	V1	UY1	Y1	C	C1	CC
180TC	7.25	8.500	0.23	9.17	0.59	1.125	2.62	1.24	0.250	29.58	21.08	7.50
210TC	7.25	8.500	0.39	9.17	0.59	1.375	3.12	1.52	0.312	29.58	21.08	7.50
250TC	7.25	8.500	0.23	9.17	0.59	1.625	3.75	1.80	0.375	33.46	24.96	11.38
280TC	9.00	10.500	0.23	13.78	0.59	1.875	4.38	2.03	0.500	33.46	24.96	11.38
320TC	11.00	12.500	0.23	13.78	0.71	2.125	5.00	2.35	0.500	32.43	23.93	10.35
360TC	11.00	12.500	0.16	17.72	0.71	2.375	5.62	2.65	0.625	35.35	26.85	13.27

Send Quote Requests to info@automatedpt.com
Call +1(800)985-6929 To Order or Order Online At Nordgearmotors.com

SK 9282 + Motor





DRIVESYSTEMS

SK 9282V

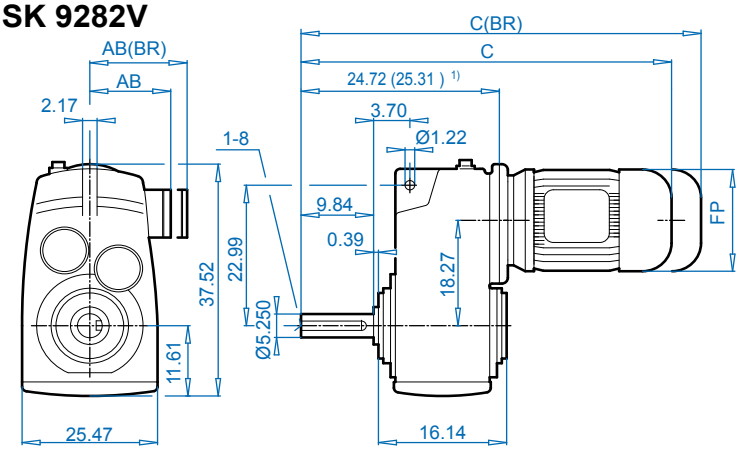

SK 9282A

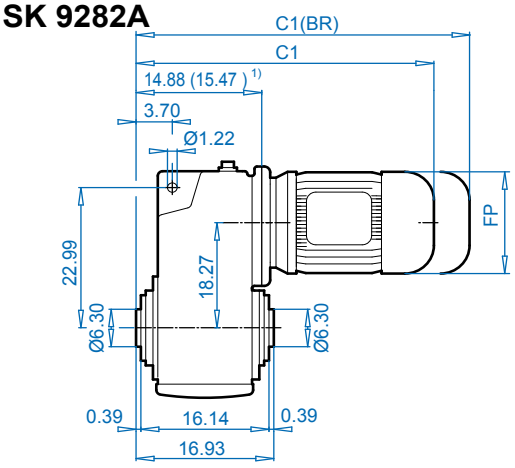

SK 9282VF

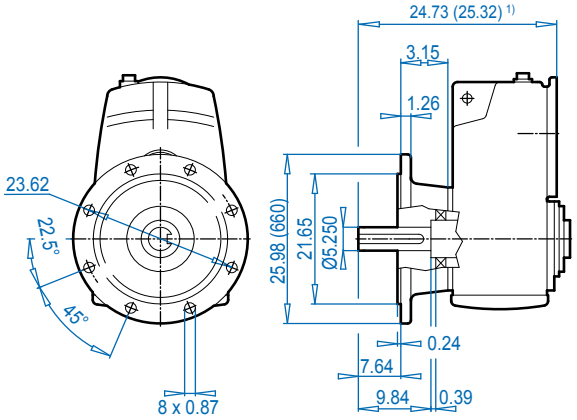

SK 9282AF

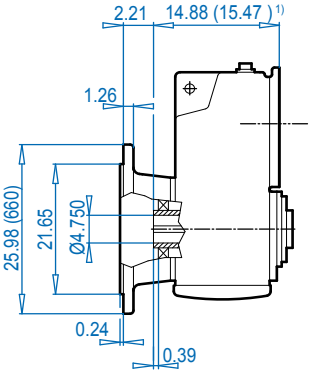

SK 9282ASH

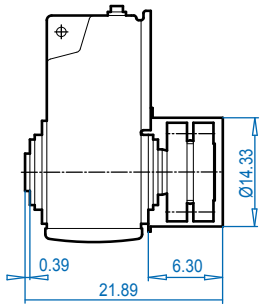

ALTERNATE SHAFTS SEE PAGES 388 - 393

SK 9282V

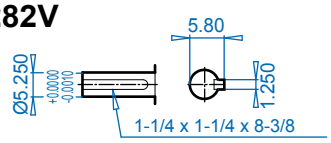

SK 9282A

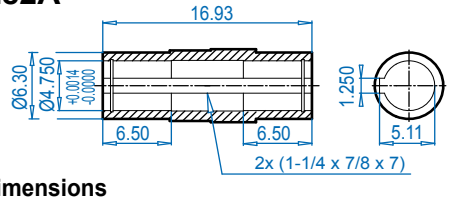

SK 9282AB ⇨🕮 394

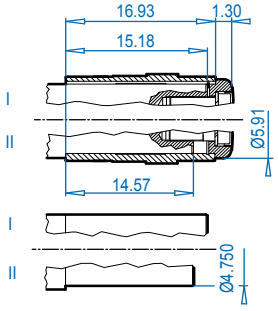

SK 9282AS ⇨🕮 391

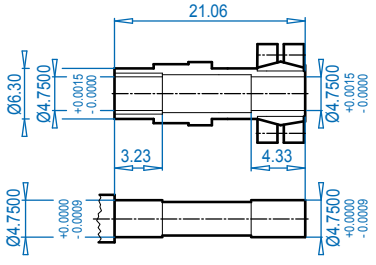

Motor dimensions

Standard eff.	225S/M			250S/M[1)]		280S[1)]	280M[1)]		315S[1)]	315Ma[1)]	For Other Connection Possibilities please see ⇨🕮 377 & 379
Energy eff.		225SH	225MH		250MH[1)]	280SH[1)]		280MH[1)]	315SH[1)]	315MHa[1)]	
AB	12.05	12.80	12.80	15.43	15.43	17.01	17.01	17.01	20.28	20.28	
AB (BR)	12.05	-	-	15.43	15.43	17.01	17.01	17.01	-	-	
C1	41.97	41.85	41.85	45.39	48.15	49.53	47.75	52.08	53.66	59.17	
C1 (BR)	48.54	-	-	53.66	56.41	60.75	58.38	62.71	-	-	
C	51.81	51.69	51.69	55.23	57.99	59.37	57.59	61.92	63.50	69.01	
C (BR)	58.38	-	-	63.50	66.25	70.59	58.62	72.55	-	-	
FP	15.67	17.52	17.52	19.49	19.49	22.64	21.85	21.85	25.39	25.39	

(BR) denotes Brakemotor

Send Quote Requests to info@automatedpt.com
Call +1(800)985-6929 To Order or Order Online At Nordgearmotors.com

DRIVESYSTEMS





SK 9282 + NEMA

SK 9282V

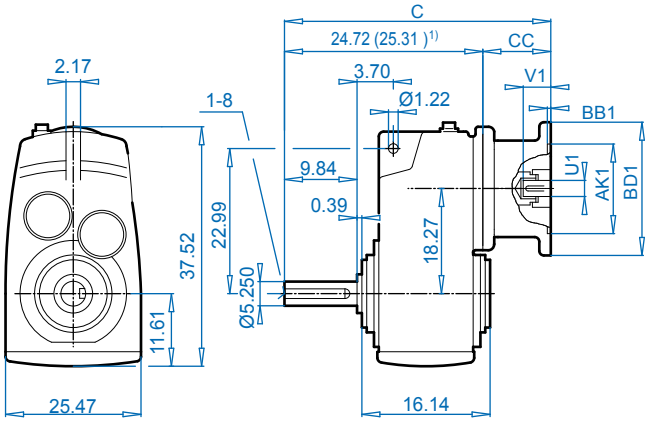

SK 9282A

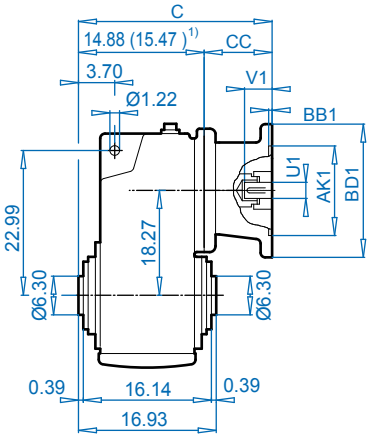

NEMA Input

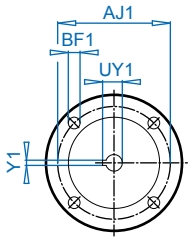

SK 9282VF

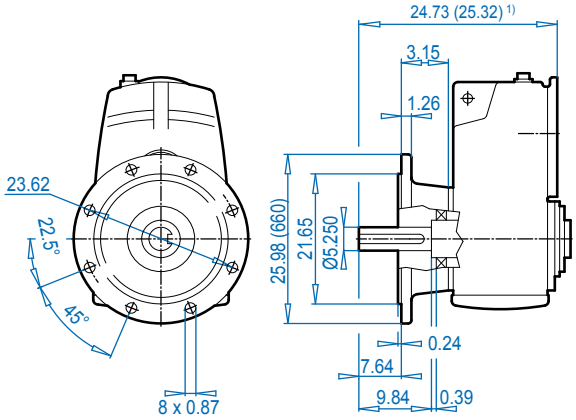

SK 9282AF

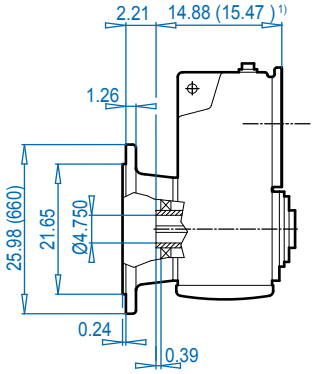

SK 9282ASH

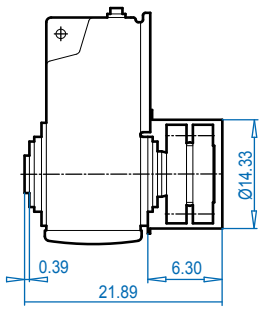

SK 9282V

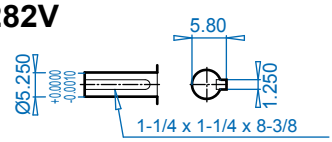

SK 9282A

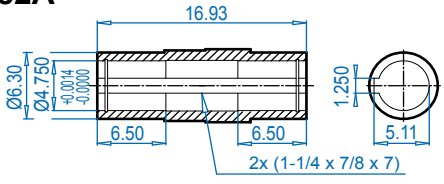

SK 9282AB ⇨🕮 394

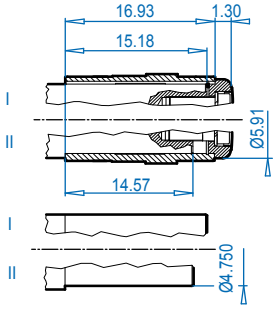

SK 9282AS ⇨🕮 391

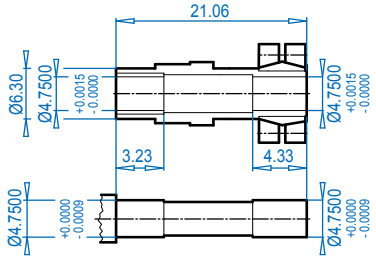

NEMA Dimensions

Type	AJ1	AK1	BB1	BD1	BF1	U1	V1	UY1	Y1	C	C1	CC
180TC	7.25	8.500	0.23	9.17	0.59	1.125	2.62	1.24	0.250	32.22	22.38	7.50
210TC	7.25	8.500	0.39	9.17	0.59	1.375	3.12	1.52	0.312	32.22	22.38	7.50
250TC	7.25	8.500	0.23	9.17	0.59	1.625	3.75	1.80	0.375	36.10	26.26	11.38
280TC	9.00	10.500	0.23	13.78	0.59	1.875	4.38	2.03	0.500	36.10	26.26	11.38
320TC	11.00	12.500	0.23	13.78	0.71	2.125	5.00	2.35	0.500	35.07	25.23	10.35
360TC[1)]	11.00	12.500	0.16	21.65	0.71	2.375	5.62	2.65	0.625	37.99	28.15	13.27

©1999 - Subject to Change Without Notice
Send Quote Requests to info@automatedpt.com
Call +1(800)985-6929 To Order or Order Online At Nordgearmotors.com

SK 9382 + Motor





DRIVESYSTEMS

DIMENSIONS

Dimensions in Inches

SK 9382V

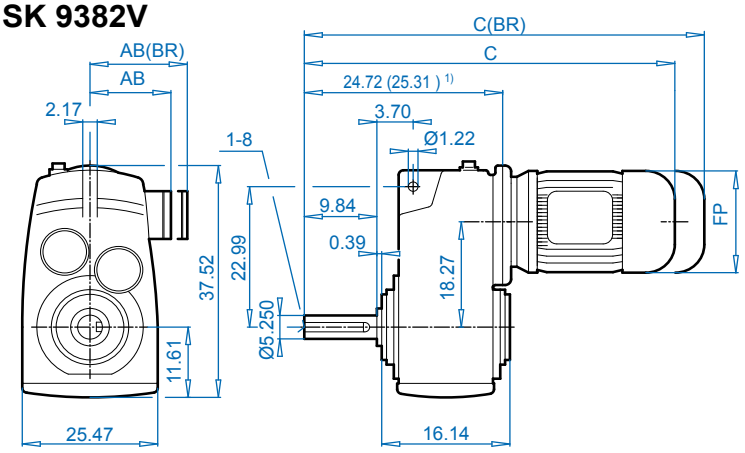

SK 9382A

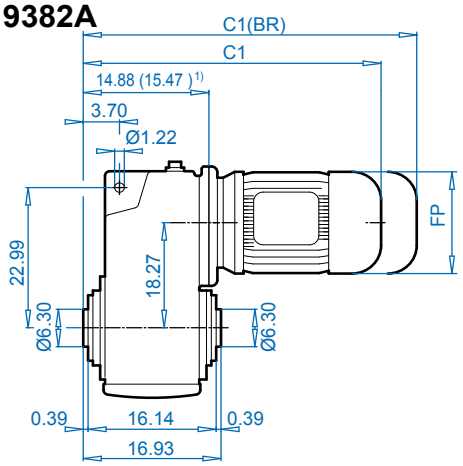

SK 9382VF

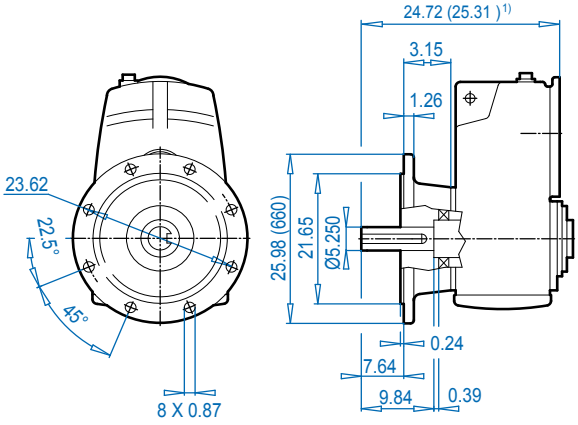

SK 9382AF

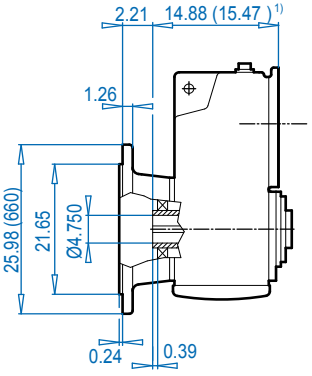

SK 9382ASH

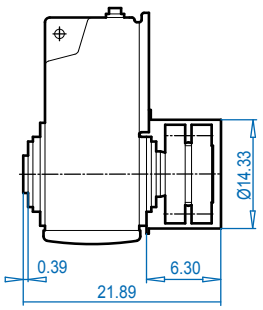

ALTERNATE SHAFTS SEE PAGES 388 - 393

SK 9382V

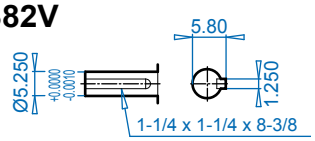

SK 9382A

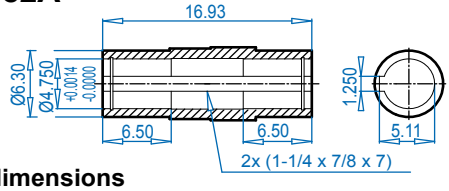

SK 9382AB ⇨🕮 394

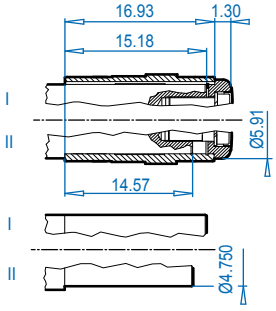

SK 9382AS ⇨🕮 391

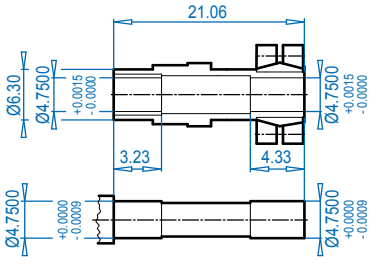

Motor dimensions

Standard eff.	132S/M	160M/L		180MX/LX		200L	225S/M			250M[1]		280S[1]	For Other Connection Possibilities please see ⇨🕮 377 & 379
Energy eff.	132SH/MH	160MH	160LH		180MH/LH	200LH		225SH	225MH		250MH[1]	280SH[1]	
AB	8.03	8.90	8.90	8.90	10.20	12.05	12.05	12.80	12.80	15.43	15.43	17.01	
AB (BR)	7.72	8.90	8.90	8.90	10.20	12.05	12.05			15.43	15.43	17.01	
C1	32.01	33.70	35.27	35.27	38.58	41.97	41.97	41.85	41.85	45.39	48.15	49.53	
C1 (BR)	36.22	40.27	42.01	42.01	42.71	48.54	48.54			53.66	56.41	60.75	
C	41.85	43.54	45.11	45.11	48.42	51.81	51.81	51.69	51.69	55.23	57.99	59.37	
C (BR)	46.06	50.11	51.85	51.85	52.55	58.38	58.38			63.50	66.25	70.59	
FP	10.16	12.60	12.60	12.60	14.09	15.67	15.67	17.52	17.52	19.49	19.49	22.64	

(BR) denotes Brakemotor

Send Quote Requests to info@automatedpt.com
Call +1(800)985-6929 To Order or Order Online At Nordgearmotors.com

DRIVESYSTEMS





SK 9382 + NEMA

SK 9382V

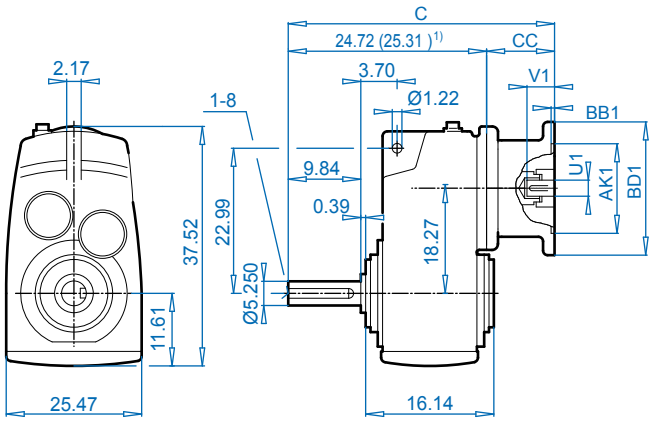

SK 9382A

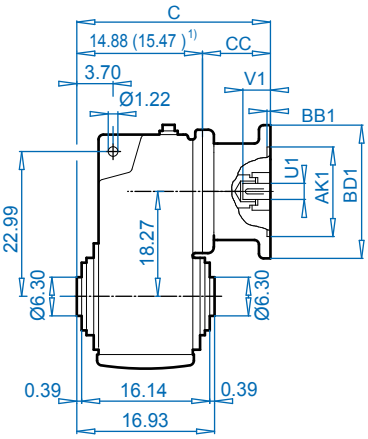

NEMA Input

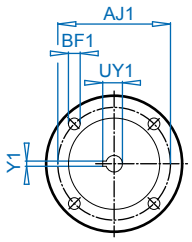

Dimensions in Inches
DIMENSIONS

SK 9382VF

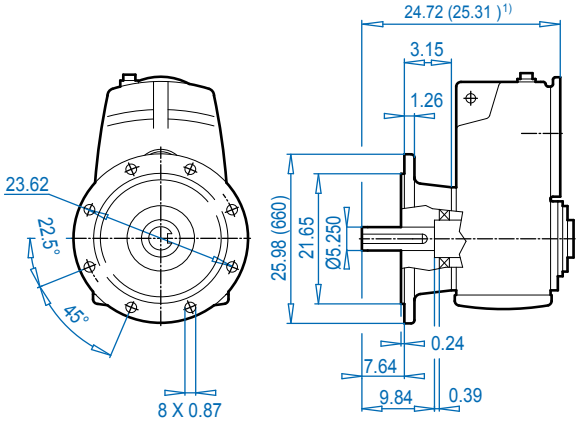

SK 9382AF

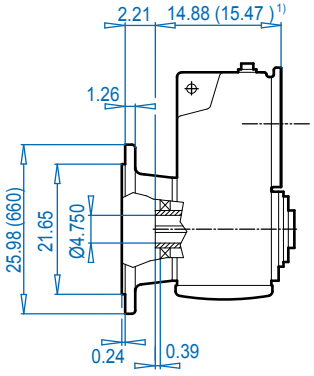

SK 9382ASH

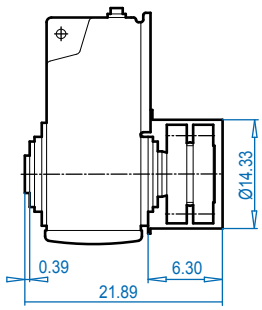

ALTERNATE SHAFTS SEE PAGES 388 - 393

SK 9382V

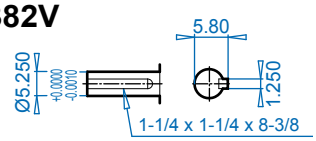

SK 9382A

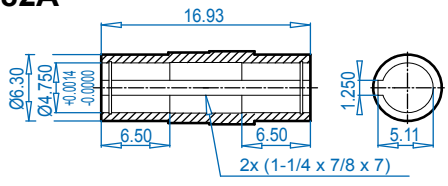

SK 9382AB ⇨ 394

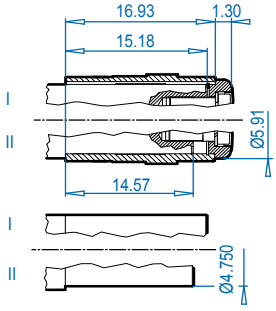

SK 9382AS ⇨ 391

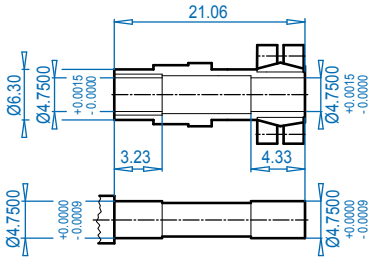

NEMA Dimensions

Type	AJ1	AK1	BB1	BD1	BF1	U1	V1	UY1	Y1	C	C1	CC
180TC	7.25	8.500	0.23	9.17	0.59	1.125	2.62	1.24	0.250	32.22	22.38	7.50
210TC	7.25	8.500	0.39	9.17	0.59	1.375	3.12	1.52	0.312	32.22	22.38	7.50
250TC	7.25	8.500	0.23	9.17	0.59	1.625	3.75	1.80	0.375	36.10	26.26	11.38
280TC	9.00	10.500	0.23	13.78	0.59	1.875	4.38	2.03	0.500	36.10	26.26	11.38
320TC	11.00	12.500	0.23	13.78	0.71	2.125	5.00	2.35	0.500	35.07	25.23	10.35
360TC[1)]	11.00	12.500	0.16	17.72	0.71	2.375	5.62	2.65	0.625	37.99	28.15	13.27

Send Quote Requests to info@automatedpt.com
Call +1(800)985-6929 To Order or Order Online At Nordgearmotors.com

SK 10282 + Motor





DRIVESYSTEMS

SK 10282VZ

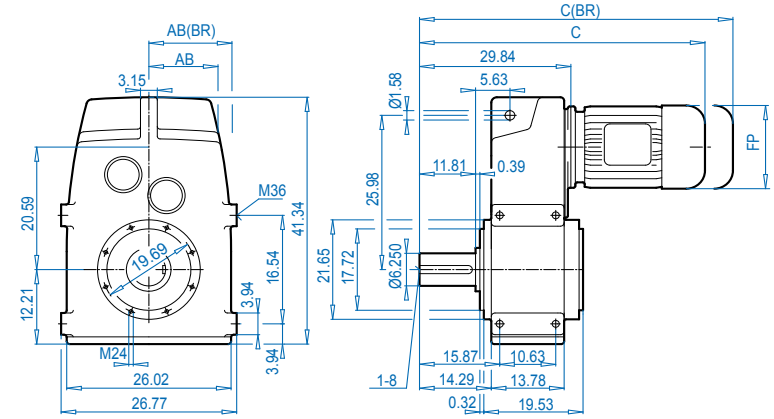

SK 10282AZSH

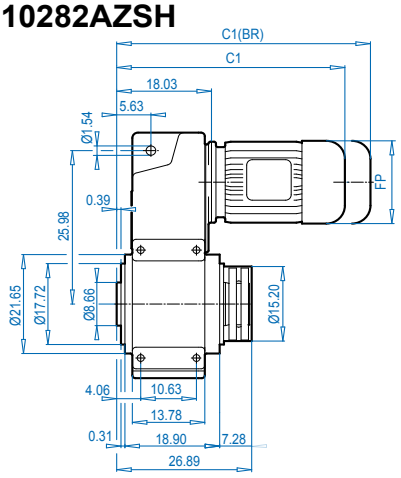

SK 10282VF

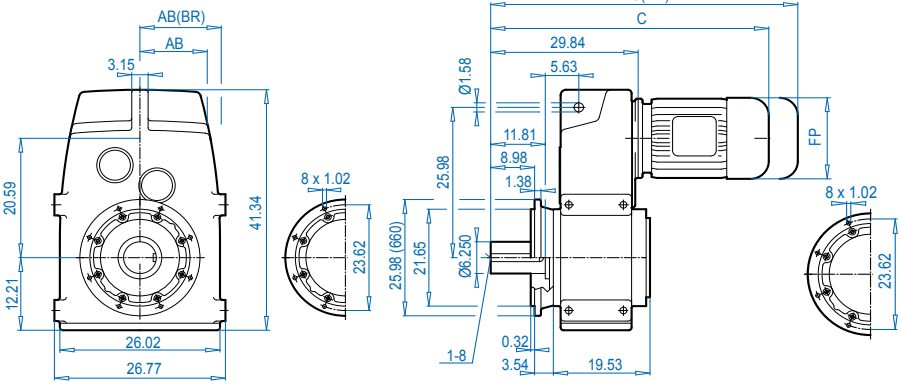

SK 10282AFSH

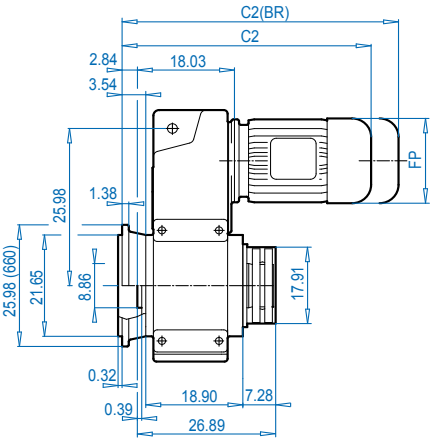

SK 10282V

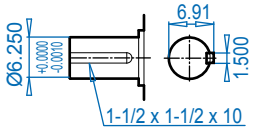

SK 10282**AZSH** ⇨🕮 391

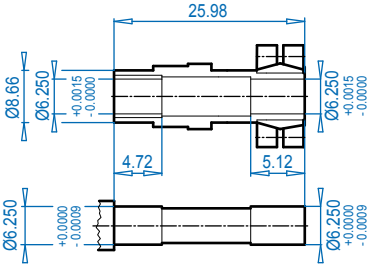

Motor dimensions

Standard efficiency	280M		315S	315Ma	For Other Connection Possibilities please see ⇨🕮 377 & 379
Energy efficiency		280MH	315SH	315MHa	
AB	17.01	17.01	20.28	20.28	
AB (BR)	17.01	17.01	-	-	
C1	50.32	54.65	56.23	61.74	
C1 (BR)	60.95	65.28	-	-	
C2	53.15	57.48	59.06	64.57	
C2 (BR)	63.78	68.11	-	-	
C	62.13	66.46	68.04	73.55	
C (BR)	72.76	77.09	-	-	
FP	21.85	21.85	25.39	25.39	

(BR) denotes Brakemotor

ALTERNATE SHAFTS SEE PAGES 388 - 393

Send Quote Requests to info@automatedpt.com
Call +1(800)985-6929 To Order or Order Online At Nordgearmotors.com

DRIVESYSTEMS





SK 10282 + NEMA

SK 10282VZ

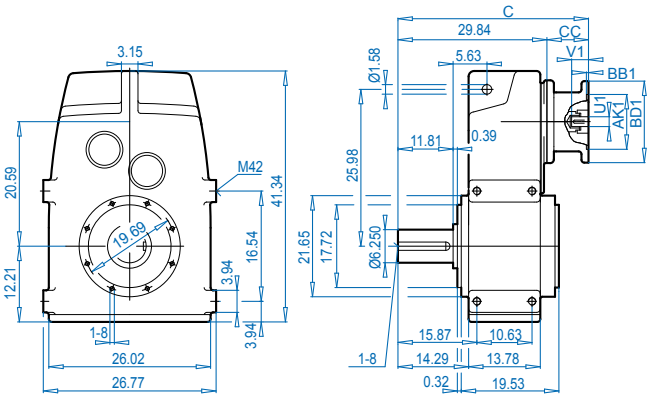

SK 10282AZSH

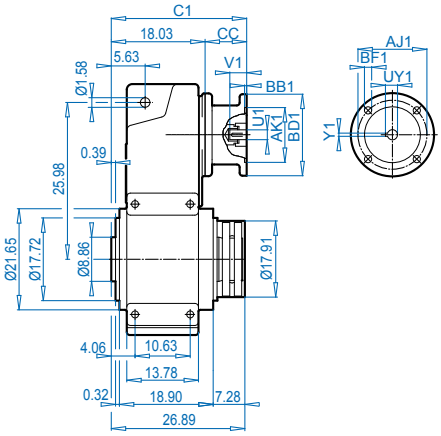

SK 10282VF

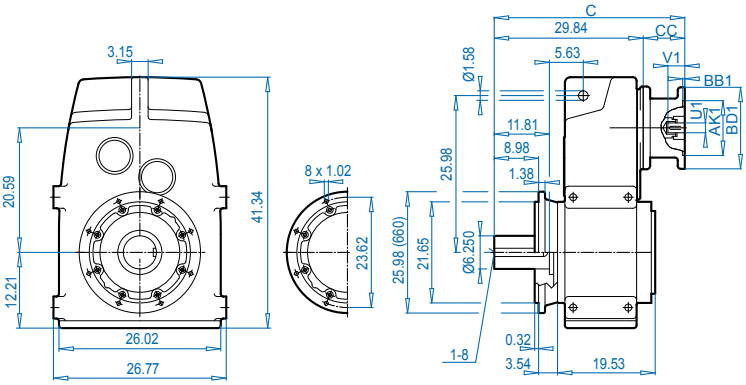

SK 10282AFSH

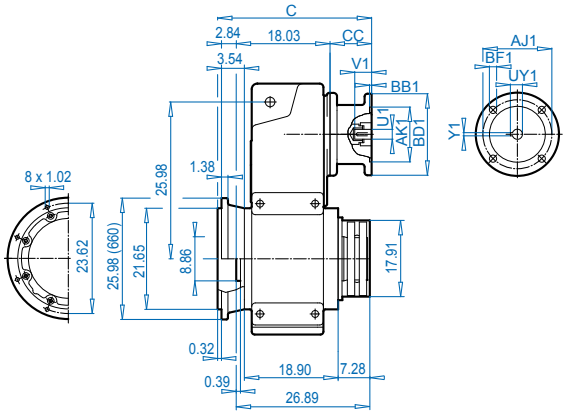

SK 10282V

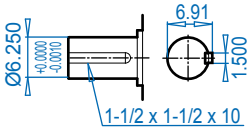

SK 10282**AZSH** ⇨📖 391

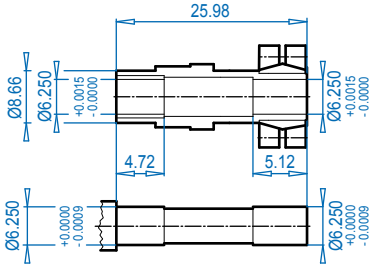

NEMA Dimensions

Type	AJ1	AK1	BB1	BD1	BF1	U1	V1	UY1	Y1	C	C1	CC
360TC	11.00	12.500	0.16	21.65	0.71	2.375	5.62	2.65	0.625	43.98	32.17	13.78

Dimensions in Inches
DIMENSIONS
ALTERNATE SHAFTS SEE PAGES 388 - 393

Send Quote Requests to info@automatedpt.com
Call +1(800)985-6929 To Order or Order Online At Nordgearmotors.com

SK 10382 + Motor





DRIVESYSTEMS

SK 10382VZ

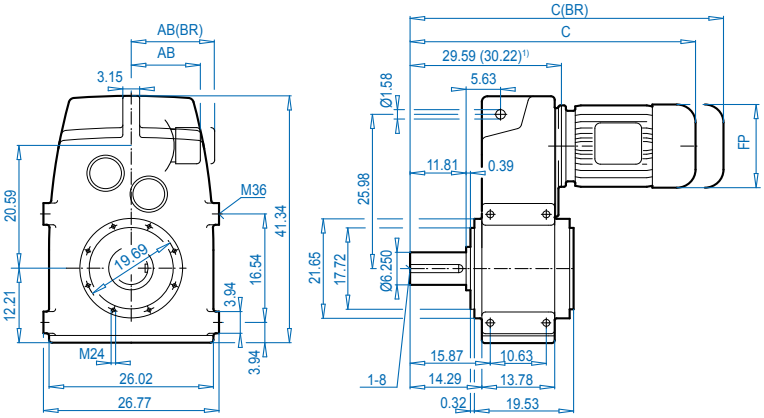

SK 10382AZSH

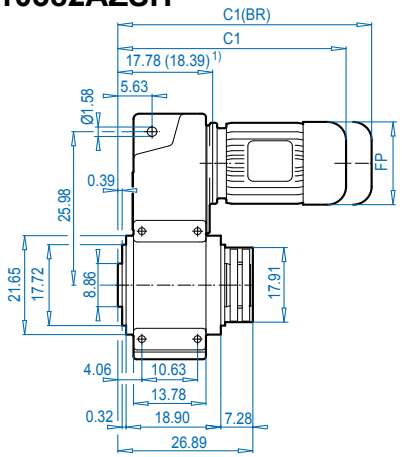

SK 10382VF

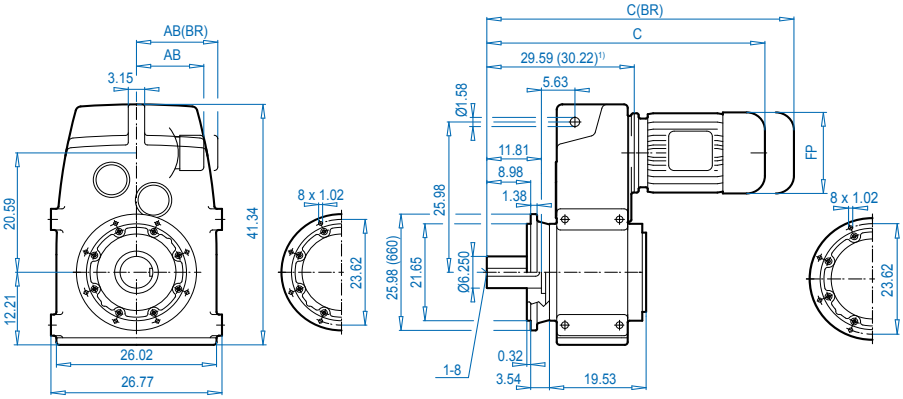

SK 10382AFSH

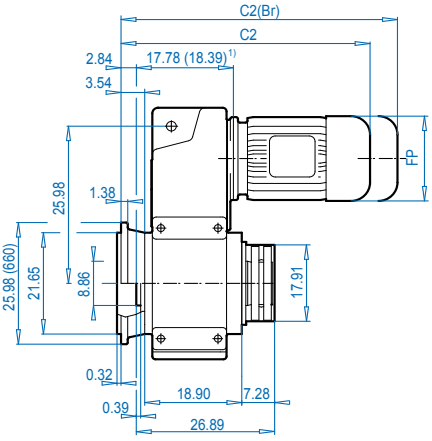

SK 10382V

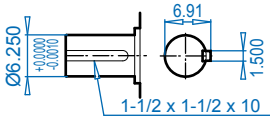

SK 10382**AZSH** ⇨🕮 391

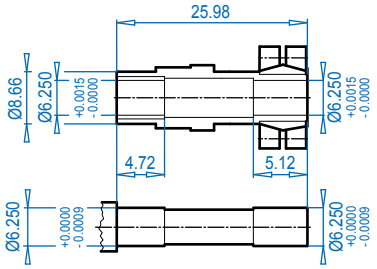

ALTERNATE SHAFTS SEE PAGES 388 - 393

Motor dimensions

Standard eff.	132S/M	160M/L		180MX/LX		200L	225S/M			250M[1)]		280S[1)]	280M[1)]		315S[1)]	315Ma[1)]	For Other Connection Possibilities please see ⇨🕮 377 & 379
Energy eff.	132SH/MH	160MH	160LH		180MH/LH	200LH		225SH	225MH		250MH[1)]	280SH[1)]		280MH[1)]	315SH[1)]	315MHa[1)]	
AB	8.03	8.90	8.90	8.90	10.20	12.05	12.05	12.80	12.80	15.43	15.43	17.01	17.01	17.01	20.28	20.28	
AB (BR)	7.72	8.90	8.90	8.90	10.20	12.05	12.05	-	-	15.43	15.43	17.01	17.01	17.01	-	-	
C1	34.89	36.58	38.15	38.15	41.46	44.85	44.85	44.73	44.73	48.31	51.07	52.45	50.67	55.00	56.58	62.09	
C1 (BR)	39.10	43.15	44.89	44.89	46.38	51.42	51.42	-	-	56.58	59.33	61.70	61.70	65.63	-	-	
C2	37.72	39.41	40.98	40.98	44.29	47.68	47.68	47.56	47.56	51.14	53.90	55.28	53.50	57.83	59.41	64.92	
C2 (BR)	41.93	45.98	47.72	47.72	48.42	54.25	54.25	-	-	59.41	62.16	66.50	64.13	68.46	-	-	
C	46.70	48.39	49.96	49.96	53.27	56.66	56.66	56.54	56.54	60.12	62.88	64.26	62.48	66.81	68.39	73.90	
C (BR)	50.91	54.96	56.70	56.70	57.40	63.23	63.23	-	-	68.39	71.14	75.48	73.11	77.44	-	-	
FP	10.16	12.60	12.60	12.60	14.09	15.67	15.67	17.52	17.52	19.49	19.49	22.64	21.85	21.85	25.39	25.39	

(BR) denotes Brakemotor

Send Quote Requests to info@automatedpt.com
Call +1(800)985-6929 To Order or Order Online At Nordgearmotors.com

DRIVESYSTEMS





SK 10382 + NEMA

SK 10382VZ

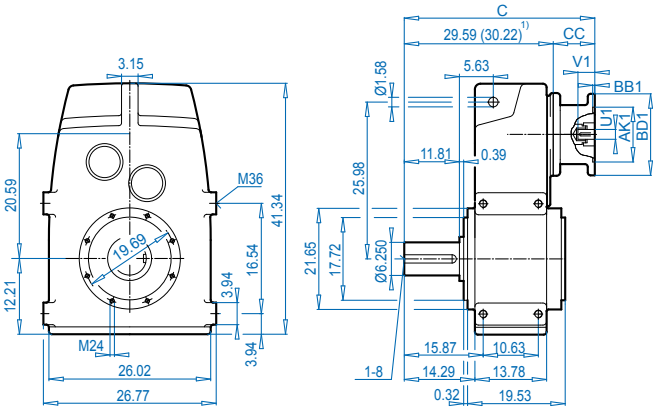

SK 10382AZSH

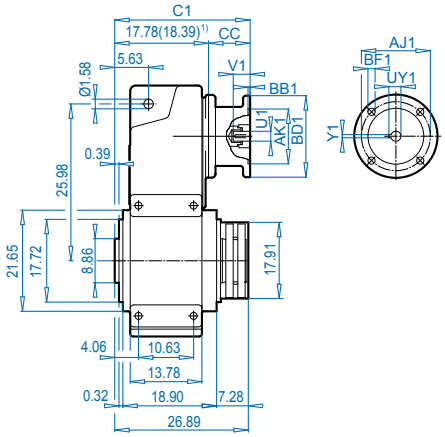

SK 10382VF

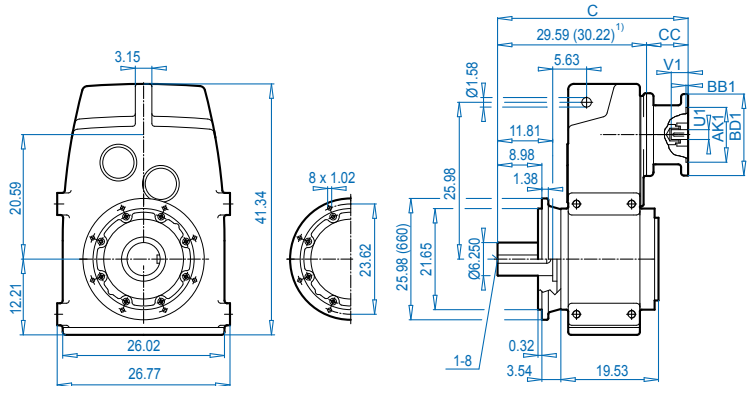

SK 10382AFSH

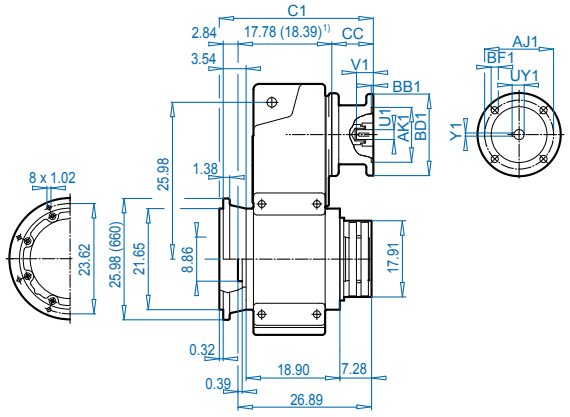

SK 10382V

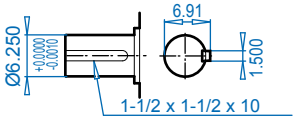

SK 10382**AZSH**

⇨📖 391

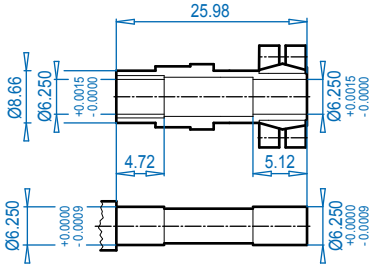

NEMA Dimensions

Type	AJ1	AK1	BB1	BD1	BF1	U1	V1	UY1	Y1	C	C1	CC
180TC	7.25	8.500	0.23	9.17	0.59	1.125	2.62	1.24	0.250	37.09	25.28	7.50
210TC	7.25	8.500	0.23	9.17	0.59	1.375	3.12	1.52	0.312	37.09	25.28	7.50
250TC	7.25	8.500	0.23	9.17	0.59	1.625	3.75	1.80	0.375	41.58	29.77	11.38
280TC	9.00	10.500	0.23	13.78	0.59	1.875	4.38	2.03	0.500	41.58	29.77	11.38
320TC	11.00	12.500	0.23	13.78	0.71	2.125	5.00	2.35	0.500	40.55	28.74	10.35
360TC1)	11.00	12.500	0.16	21.65	0.71	2.375	5.62	2.65	0.625	43.98	32.17	13.78

G1000 Subject to Change Without Notice
Send Quote Requests to info@automatedpt.com
Call +1(800)985-6929 To Order or Order Online At Nordgearmotors.com

SK 11282 + Motor





DRIVESYSTEMS

SK 11282VZ

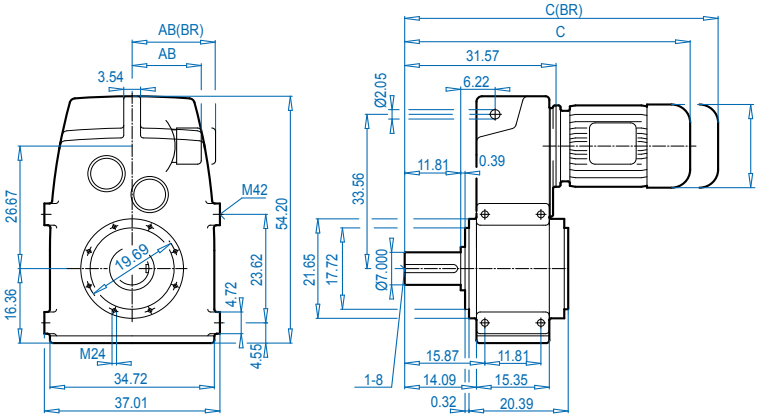

SK 11282AZSH

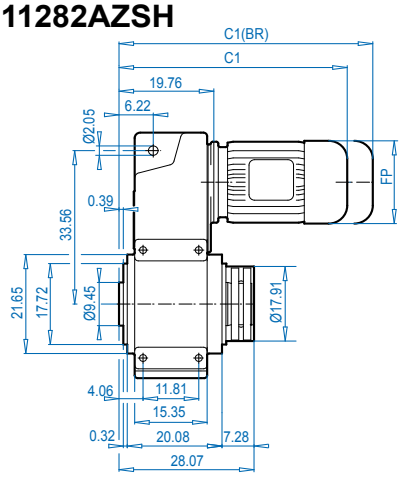

SK 11282VF

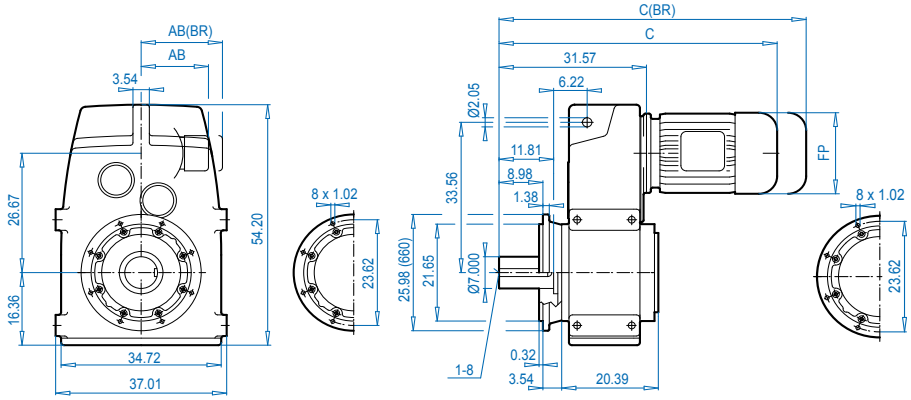

SK 11282AFSH

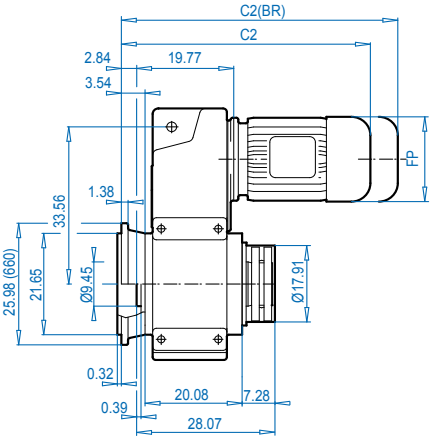

SK 11282V

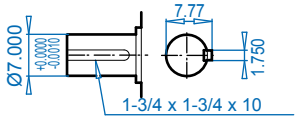

SK 11282**AZSH** ⇨🕮 391

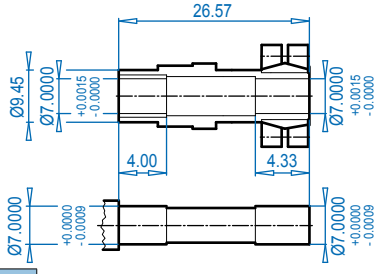

Motor dimensions

Standard efficiency	280M		315S	315Ma	For Other Connection Possibilities please see ⇨🕮 377 & 379
Energy efficiency		280MH	315SH	315MHa	
AB	17.01	17.01	20.28	20.28	
AB (BR)	17.01	17.01	-	-	
C1	51.69	56.02	57.60	63.11	
C1 (BR)	62.32	66.65	-	-	
C2	54.53	58.86	60.44	65.95	
C2 (BR)	65.16	69.49	-	-	
C	63.51	67.84	69.42	74.93	
C (BR)	74.14	78.47	-	-	
FP	21.85	21.85	25.39	25.39	

(BR) denotes Brakemotor

Send Quote Requests to info@automatedpt.com
Call +1(800)985-6929 To Order or Order Online At Nordgearmotors.com

DRIVESYSTEMS





SK 11282 + NEMA

SK 11282VZ

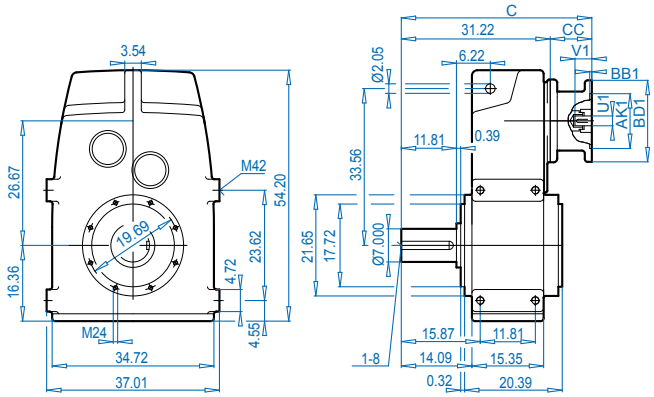

SK 11282AZSH

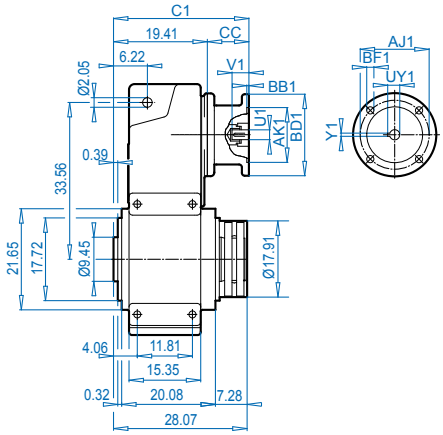

SK 11282VF

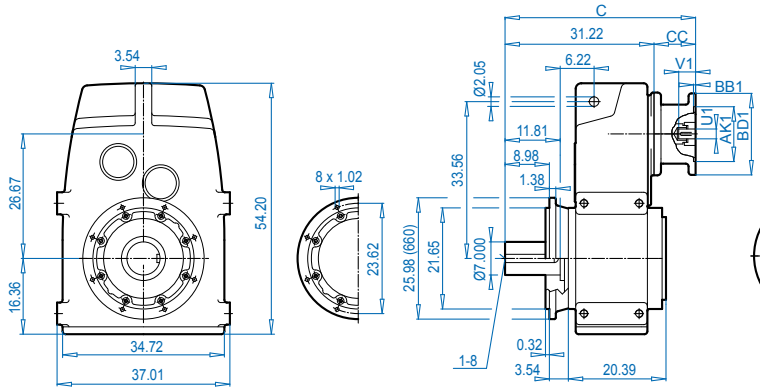

SK 11282AFSH

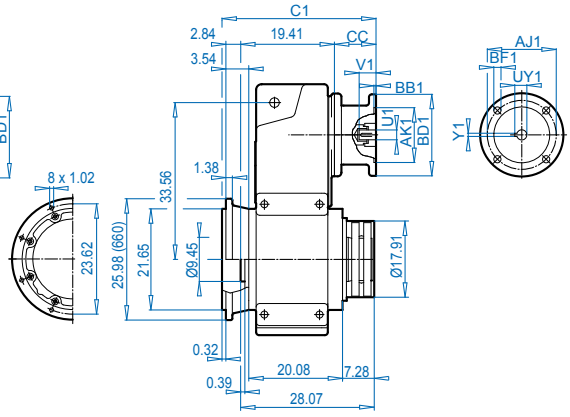

SK 11282V

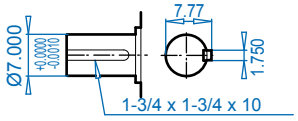

SK 11282**AZSH** ⇨📖 391

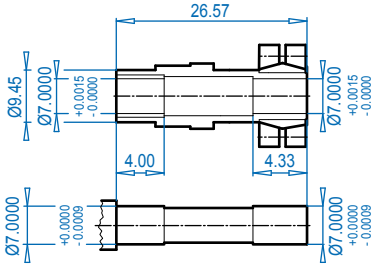

NEMA Dimensions

Type	AJ1	AK1	BB1	BD1	BF1	U1	V1	UY1	Y1	C	C1	CC
360TC	11.00	12.500	0.16	21.65	0.71	2.375	5.62	2.65	0.625	44.14	32.32	13.27

G1000 Subject to Change Without Notice
Send Quote Requests to info@automatedpt.com
Call +1(800)985-6929 To Order or Order Online At Nordgearmotors.com

SK 11382 + Motor





DRIVESYSTEMS

SK 11382VZ

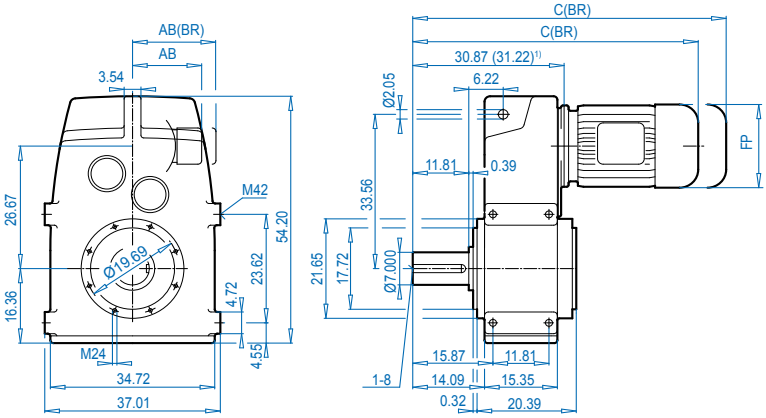

SK 11382AZSH

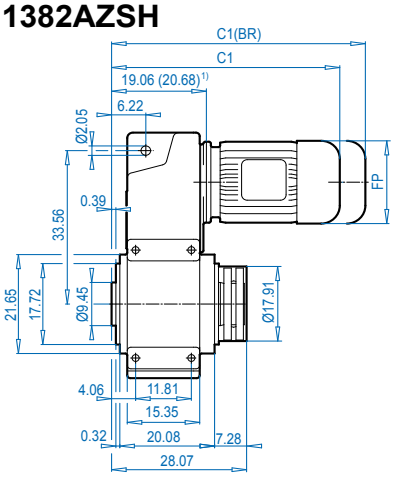

SK 11382VF

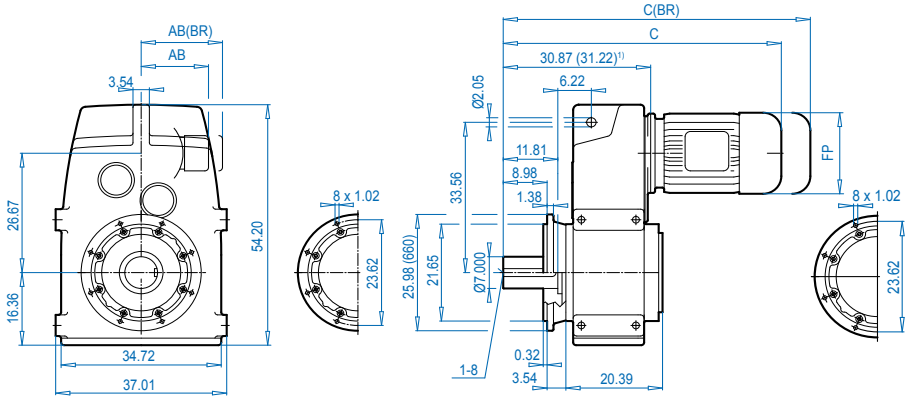

SK 11382AFSH

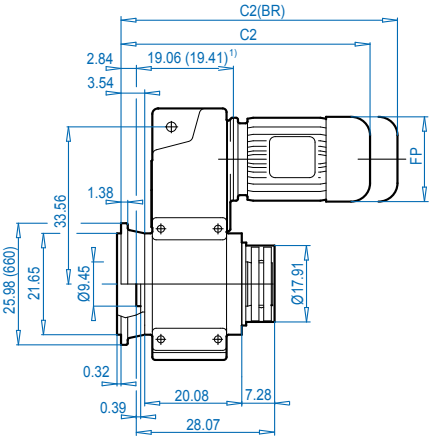

SK 11382V

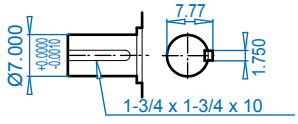

SK 11382**AZSH** ⇨🕮 391

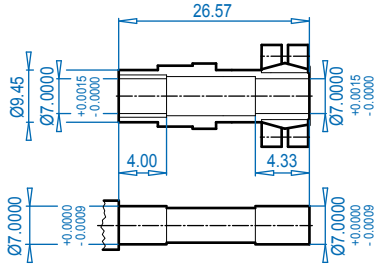

Motor dimensions

Standard eff.	160M/L		180MX/LX		200L	225S/M			250M		280S	280M1)		315S1)	315Ma1)	For Other Connection Possibilities please see ⇨🕮 377 & 379
Energy eff.	160MH	160LH		180MH/LH	200LH		225SH	225MH		250MH	280SH		280MH1)	315SH1)	315MHa1)	
AB	8.90	8.90	8.90	10.20	12.05	12.05	12.80	12.80	15.43	15.43	17.01	17.01	17.01	20.28	20.28	
AB (BR)	8.90	8.90	8.90	10.20	12.05	12.05	-	-	15.43	15.43	17.01	17.01	17.01	-	-	
C1	37.87	39.44	39.44	42.75	46.14	46.14	46.02	46.02	48.97	51.73	53.11	51.69	56.02	57.60	63.11	
C1 (BR)	44.44	46.18	46.18	46.88	52.71	52.71	-	-	60.00	64.33	62.32	66.65	66.65	-	-	
C2	40.71	42.28	42.28	45.59	48.98	48.98	48.86	48.86	51.81	54.57	55.95	54.53	58.86	60.44	65.95	
C2 (BR)	47.28	49.02	49.02	49.72	55.55	55.55		-	60.08	62.84	67.17	65.16	69.49	-	-	
C	49.69	51.26	51.26	54.57	57.96	57.96	57.84	57.84	60.79	63.55	64.93	63.51	67.84	69.42	74.93	
C (BR)	56.26	58.00	58.00	58.70	64.53	64.53	-	-	69.06	71.82	76.15	74.14	78.47	-	-	
FP	12.60	12.60	12.60	14.09	15.67	15.67	17.52	17.52	19.49	19.49	22.64	21.85	21.85	25.39	25.39	

(BR) denotes Brakemotor

ALTERNATE SHAFTS SEE PAGES 388 - 393

Send Quote Requests to info@automatedpt.com
Call +1(800)985-6929 To Order or Order Online At Nordgearmotors.com

DRIVESYSTEMS





SK 11382 + NEMA

SK 11382VZ

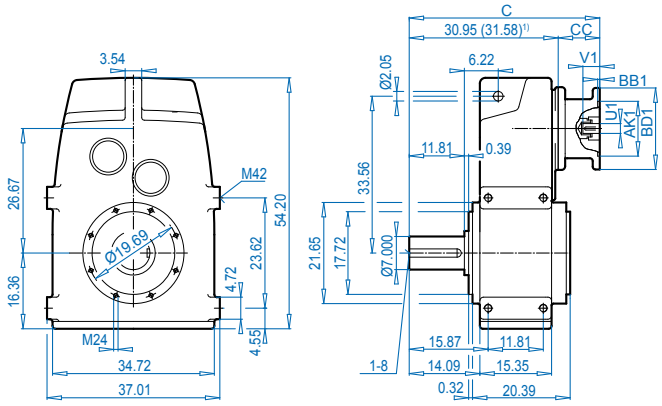

SK 11382AZSH

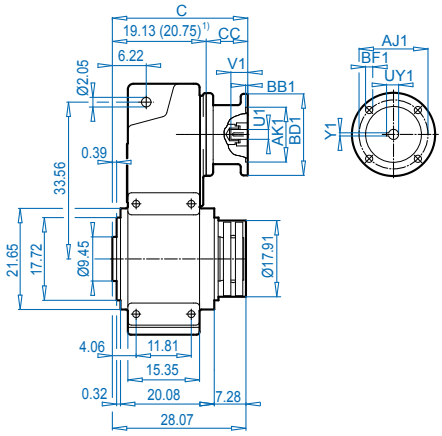

SK 11382VF

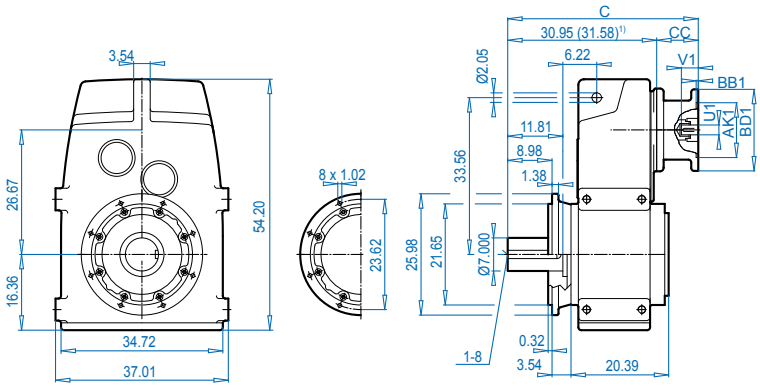

SK 11382AFSH

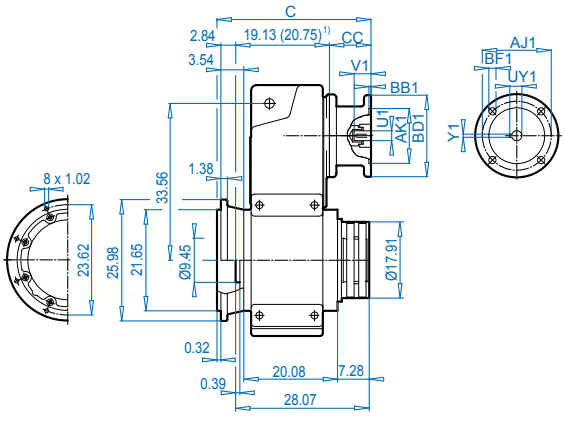

SK 11382V

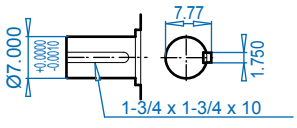

SK 11382**AZSH** ⇨🕮 391

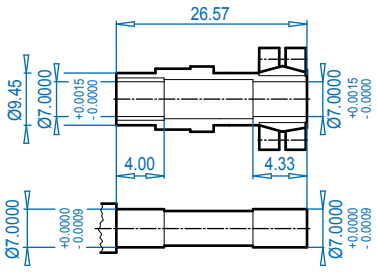

NEMA Dimensions

Type	AJ1	AK1	BB1	BD1	BF1	U1	V1	UY1	Y1	C	C1	CC
180TC	7.25	8.500	0.23	9.17	0.59	1.125	2.62	1.24	0.250	38.47	26.65	7.52
210TC	7.25	8.500	0.23	9.17	0.59	1.375	3.12	1.52	0.312	38.47	26.65	7.52
250TC	7.25	8.500	0.23	9.17	0.59	1.625	3.75	1.80	0.375	42.25	30.43	11.38
280TC	9.00	10.500	0.23	13.78	0.59	1.875	4.38	2.03	0.500	42.25	30.43	11.38
320TC	11.00	12.500	0.23	13.78	0.71	2.125	5.00	2.35	0.500	41.22	29.40	10.35
360TC1)	11.00	12.500	0.16	21.65	0.71	2.375	5.62	2.65	0.625	44.14	32.32	13.27

Send Quote Requests to info@automatedpt.com
Call +1(800)985-6929 To Order or Order Online At Nordgearmotors.com

SK 12382 + Motor





DRIVESYSTEMS

SK 12382VZ

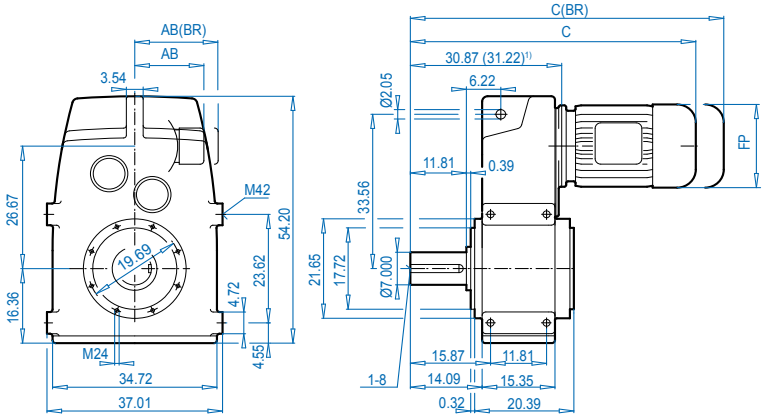

SK 12382AZSH

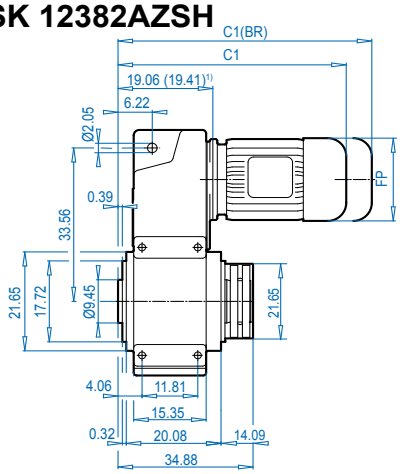

SK 12382VF

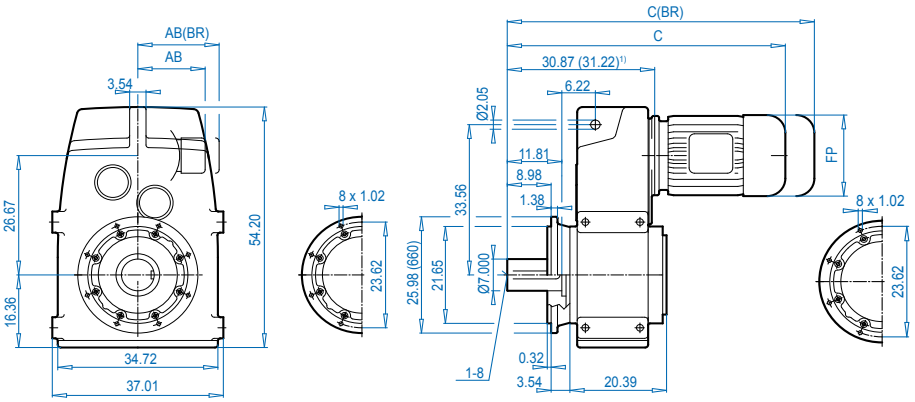

SK 12382AFSH

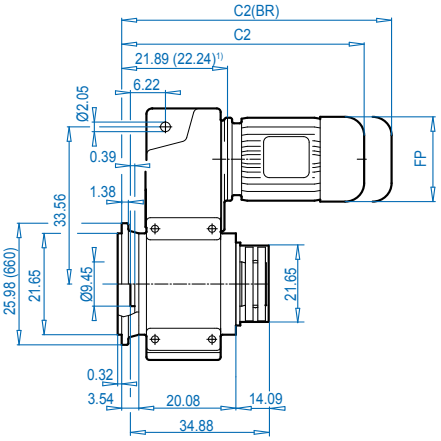

SK 12382V

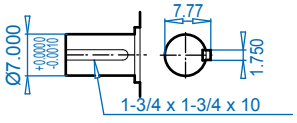

SK 12382**AZSH** ⇨🕮 391

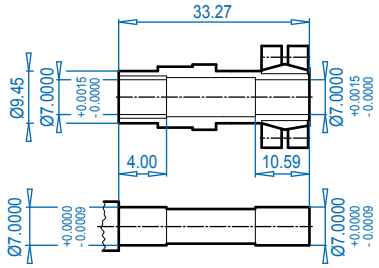

Motor dimensions

Standard eff.	160M/L		180MX/LX		200L	225S/M			250M		280S	280M1)		315S1)	315Ma1)	For Other Connection Possibilities please see ⇨🕮 377 & 379
Energy eff.	160MH	160LH		180MH/LH	200LH		225SH	225MH		250MH	280SH		280MH1)	315SH1)	315MHa1)	
AB	8.90	8.90	8.90	10.20	12.05	12.05	12.80	12.80	15.43	15.43	17.01	17.01	17.01	20.28	20.28	
AB (BR)	8.90	8.90	8.90	10.20	12.05	12.05	-	-	15.43	15.43	17.01	17.01	17.01	-	-	
C1	37.87	39.44	39.44	42.75	46.14	46.14	46.02	46.02	48.97	51.73	53.11	51.69	56.02	57.60	63.11	
C1 (BR)	44.44	46.18	46.18	46.88	52.71	52.71	-	-	60.00	64.33	62.32	66.65	66.65	-	-	
C2	40.71	42.28	42.28	45.59	48.98	48.98	48.86	48.86	51.81	54.57	55.95	54.53	58.86	60.44	65.95	
C2 (BR)	47.28	49.02	49.02	49.72	55.55	55.55	-	-	60.08	62.84	67.17	65.16	69.49	-	-	
C	49.69	51.26	51.26	54.57	57.96	57.96	57.84	57.84	60.79	63.55	64.93	63.51	67.84	69.42	74.93	
C (BR)	56.26	58.00	58.00	58.70	64.53	64.53	-	-	69.06	71.82	76.15	74.14	78.47	-	-	
FP	12.60	12.60	12.60	14.09	15.67	15.67	17.52	17.52	19.49	19.49	22.64	21.85	21.85	25.39	25.39	

(BR) denotes Brakemotor

ALTERNATE SHAFTS SEE PAGES 388 - 393

Send Quote Requests to info@automatedpt.com
Call +1(800)985-6929 To Order or Order Online At Nordgearmotors.com

DRIVESYSTEMS





SK 12382 + NEMA

SK 12382VZ

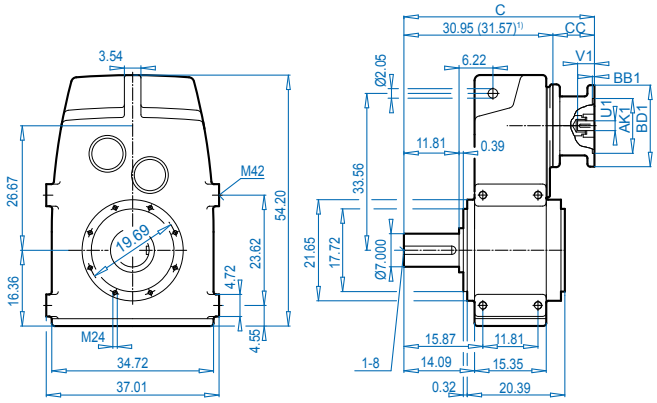

SK 12382AZSH

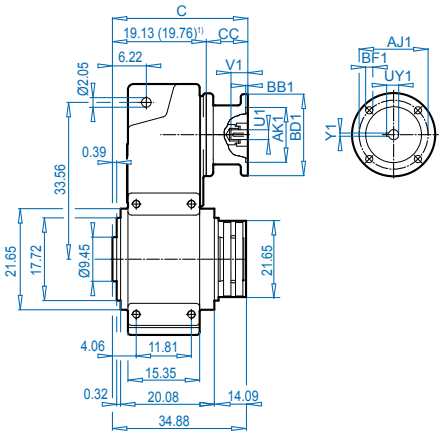

SK 12382VF

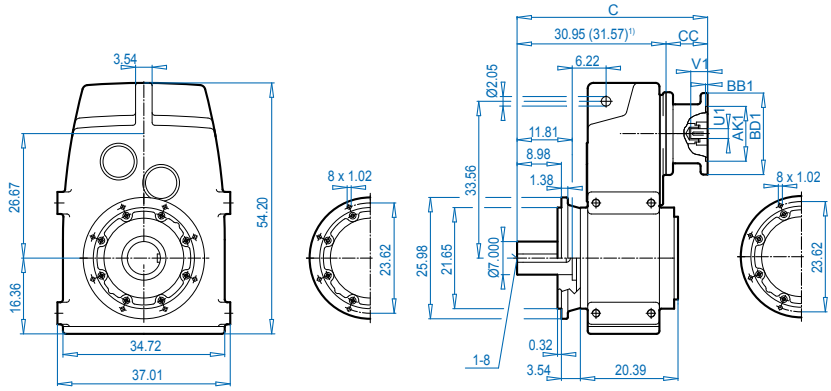

SK 12382AFSH

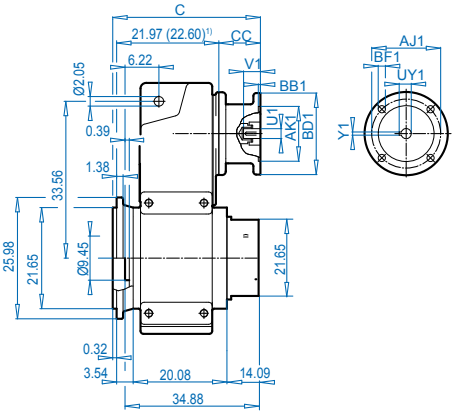

SK 12382V

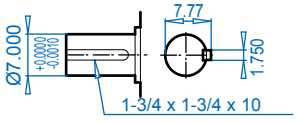

SK 12382**AZSH** ⇨🕮 391

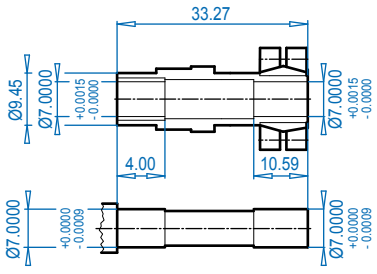

NEMA Dimensions

Type	AJ1	AK1	BB1	BD1	BF1	U1	V1	UY1	Y1	C	C1	CC
180TC	7.25	8.500	0.23	9.17	0.59	1.125	2.62	1.24	0.250	38.47	26.65	7.52
210TC	7.25	8.500	0.23	9.17	0.59	1.375	3.12	1.52	0.312	38.47	26.65	7.52
250TC	7.25	8.500	0.23	9.17	0.59	1.625	3.75	1.80	0.375	42.25	30.43	11.38
280TC	9.00	10.500	0.23	13.78	0.59	1.875	4.38	2.03	0.500	42.25	30.43	11.38
320TC	11.00	12.500	0.23	13.78	0.71	2.125	5.00	2.35	0.500	41.22	29.40	10.35
360TC1)	11.00	12.500	0.16	21.65	0.71	2.375	5.62	2.65	0.625	44.14	32.32	13.27

ALTERNATE SHAFTS SEE PAGES 388 - 393

Send Quote Requests to info@automatedpt.com
Call +1(800)985-6929 To Order or Order Online At Nordgearmotors.com

SK 1282/02 - SK 8382/32



DRIVESYSTEMS

DIMENSIONS
Dimensions in Inches

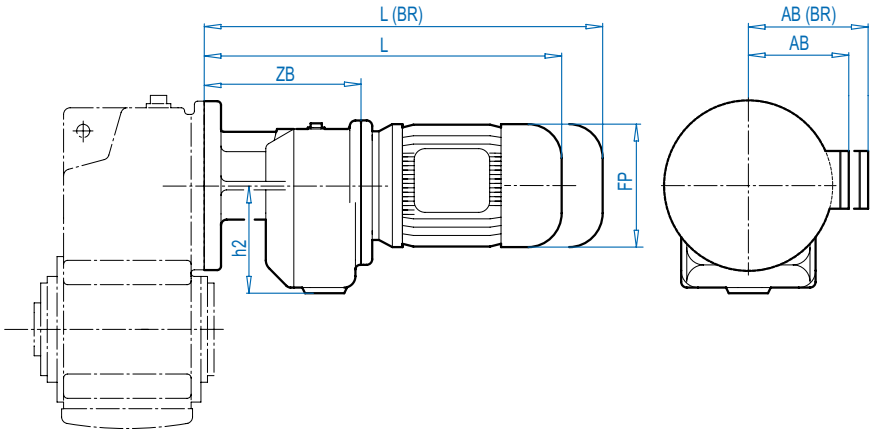

Motor dimensions

Type	SK 1282/02		SK 2282/02		SK 3282/12				For Other Connection Possibilities please see ⇨🕮 376 & 378
Standard eff.	63S/L	71S/L	63S/L	71S/L	63S/L	80S/L	90S/L		
Energy eff.						80LH	90SH/LH		
AB	4.53	4.88	4.53	4.88	4.53	5.59	5.79		
AB (BR)	4.84	5.24	4.84	5.24	4.84	5.63	5.83		
L	13.31	14.88	13.94	15.51	14.45	17.01	19.53		
L (BR)	15.51	17.16	16.14	17.79	16.65	18.62	21.57		
ZB	5.59		6.22			6.73			
h2	3.5		3.5			4.17			
FP	5.12	5.71	5.12	5.71	5.12	6.50	7.20		
	SK 1282 ⇨🕮 330		SK 2282 ⇨🕮 332		SK 3282 ⇨🕮 336				

Type	SK 4282/12, SK 5282/12			SK 6382/22					For Other Connection Possibilities please see ⇨🕮 376 & 378
Standard eff.	63S/L	71S/L	80S/L	71L	80S/L	90S/L	100L		
Energy eff.			80LH		80LH	90SH/LH	100LH	112MH	
AB	4.53	4.88	5.59	4.88	5.59	5.79	6.65	7.05	
AB (BR)	4.84	5.24	5.63	5.24	5.63	5.83	6.26	6.69	
L	14.61	16.18	17.17	16.11	17.09	18.70	19.88	20.79	
L (BR)	16.81	18.46	19.69	18.39	19.61	21.65	23.47	24.45	
ZB	6.89			7.05					
h2	4.17			4.92					
FP	5.12	5.71	6.50	5.71	6.50	7.20	7.91	8.98	
	SK 4282 ⇨🕮 340, SK 5282 ⇨🕮 344			SK 6382 ⇨🕮 350					

Type	SK7382/22				SK6382/32	SK7382/32	SK8382/32				For Other Connection Possibilities please see ⇨🕮 376 - 379
Standard eff.	80S/L	90S/L	100L		W/NEMA	132S	80S/L	90S/L	100L		
Energy eff.	80LH	90SH/LH	100LH	112MH		132SH	80LH	90SH/LH	100LH	112MH	
AB	5.59	5.79	6.65	7.05	-	8.03	5.59	5.79	6.65	7.05	
AB (BR)	5.63	5.83	6.26	6.69	-	7.72	5.63	5.83	6.26	6.69	
L	17.09	18.70	19.88	20.79	-	25.75	18.66	20.27	21.45	22.36	
L (BR)	19.61	21.65	23.47	24.45	-	29.96	21.18	23.22	25.04	26.02	
ZB	7.05				8.62	8.62	8.62				
h2	4.92				6.10	6.10	6.10				
FP	6.50	7.20	7.91	8.98	-	10.47	6.50	7.20	7.91	8.98	
	SK 7382 ⇨🕮 354				SK 6382 ⇨🕮 350	SK 7382 ⇨🕮 354	SK 8382 ⇨🕮 358				

(BR) denotes Brakemotor

Send Quote Requests to info@automatedpt.com
Call +1(800)985-6929 To Order or Order Online At Nordgearmotors.com

DRIVESYSTEMS





SK 8382/42 - SK 11382/52

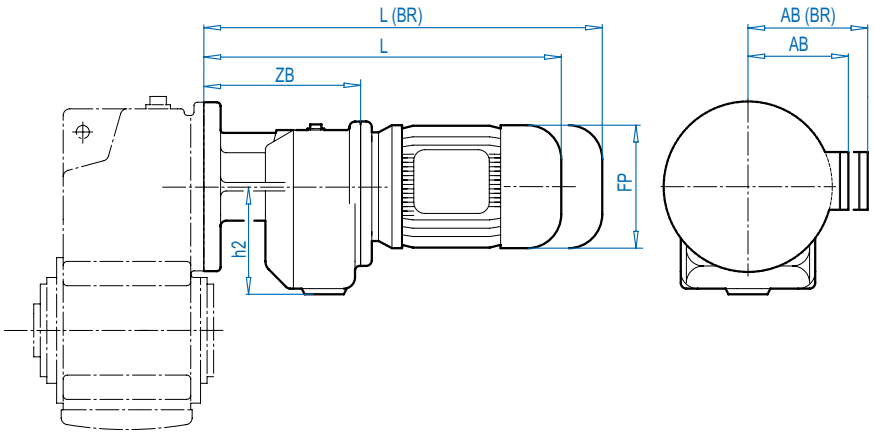

DIMENSIONS
Dimensions in Inches

Motor dimensions

Type	SK 8382/42 , SK 9382/42							For Other Connection Possibilities please see ⇨🕮 377 & 379
Standard eff.	90S/L	100L		132S/M				
Energy eff.	90LH	100LH	112MH	132SH/SM				
AB	5.79	6.65	7.05	8.03				
AB (BR)	5.83	6.26	6.69	7.72				
L	21.12	22.30	23.20	26.59				
L (BR)	24.07	25.89	26.86	30.80				
ZB	10.25							
h2	6.89							
FP	7.20	7.91	8.98	10.47				
	SK 8382 ⇨🕮 358, SK 9382 ⇨🕮 362							

Type	SK 9382/52 , SK 10382/52 , SK 11382/52							For Other Connection Possibilities please see ⇨🕮 377 & 379
Standard eff.	100L		132S/M	160M/L		180MX		
Energy eff.	100LH	112MH	132SH/MH	160MH	160LH		180MH	
AB	6.65	7.05	8.03	8.90	8.90	8.90	10.20	
AB (BR)	6.26	6.69	7.72	8.90	8.90	8.90	10.20	
L	23.86	24.76	28.15	31.18	36.30	36.30	49.21	
L (BR)	27.45	28.42	32.36	38.23	40.43	40.43	53.34	
ZB	11.81							
h2	8.35							
FP	7.91	8.98	10.47	12.60	12.60	12.60	14.09	
	SK 9382 ⇨🕮 362, SK 10382 ⇨🕮 366, SK 11382 ⇨🕮 370							

(BR) denotes Brakemotor

G1000 Subject to Change Without Notice
Send Quote Requests to info@automatedpt.com
Call +1(800)985-6929 To Order or Order Online At Nordgearmotors.com

Solid Input Shaft
Type - W



DRIVESYSTEMS

DIMENSIONS
Dimensions in Inches

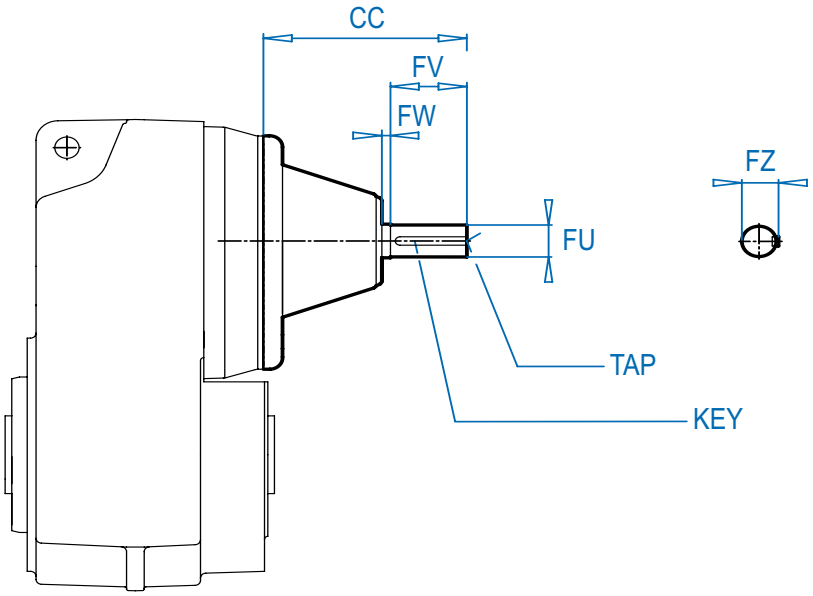

Unit	CC	FW	FV	FU	FZ	TAP	KEY	Unit Dimensions
SK 0182NB	3.85	0.16	1.13	0.500 +0.0000 -0.0005	0.56	1/4-20	1/8 x 1/8 x 7/8	⇨🕮 312
SK 0282NB	3.85	0.16	1.13	0.500 +0.0000 -0.0005	0.56	1/4-20	1/8 x 1/8 x 7/8	⇨🕮 318
SK 1382NB	4.29	0.16	1.57	0.625 +0.0000 -0.0005	0.70	1/4-20	3/16 x 3/16 x 1 1/4	⇨🕮 324
SK 1282	4.73	0.28	1.50	0.625 +0.0000 -0.0005	0.70	1/4-20	3/16 x 3/16 x 1 1/4	⇨🕮 362
SK 1282/02	4.73	0.28	1.50	0.625 +0.0000 -0.0005	0.70	1/4-20	3/16 x 3/16 x 1 1/4	⇨🕮 374
SK 2282	6.80	0.31	2.00	0.875 +0.0000 -0.0005	0.96	1/4-20	3/16 x 3/16 x 1 5/8	⇨🕮 332
SK 2282/02	4.73	0.28	1.50	0.625 +0.0000 -0.0005	0.70	1/4-20	3/16 x 3/16 x 1 1/4	⇨🕮 374
SK 2382	4.73	0.28	1.50	0.625 +0.0000 -0.0005	0.70	1/4-20	3/16 x 3/16 x 1 1/4	⇨🕮 334
SK 3282	6.80	0.31	2.00	0.875 +0.0000 -0.0005	0.96	1/4-20	3/16 x 3/16 x 1 5/8	⇨🕮 336
SK 3282/12	4.73	0.28	1.50	0.625 +0.0000 -0.0005	0.70	1/4-20	3/16 x 3/16 x 1 1/4	⇨🕮 374
SK 3382	4.73	0.28	1.50	0.625 +0.0000 -0.0005	0.70	1/4-20	3/16 x 3/16 x 1 1/4	⇨🕮 338
SK 4282	8.36	0.31	3.12	1.500 +0.0000 -0.0005	1.66	5/8-11	3/8 x 3/8 x 2 1/2	⇨🕮 340
SK 4282/12	4.73	0.28	1.50	0.625 +0.0000 -0.0005	0.70	1/4-20	3/16 x 3/16 x 1 1/4	⇨🕮 374
SK 4382	6.80	0.31	2.00	0.875 +0.0000 -0.0005	0.96	1/4-20	3/16 x 3/16 x 1 5/8	⇨🕮 342
SK 5282	8.36	0.31	3.12	1.500 +0.0000 -0.0005	1.66	5/8-11	3/8 x 3/8 x 2 1/2	⇨🕮 344
SK 5282/12	4.73	0.28	1.50	0.625 +0.0000 -0.0005	0.70	1/4-20	3/16 x 3/16 x 1 1/4	⇨🕮 374
SK 5382	6.80	0.31	2.00	0.875 +0.0000 -0.0005	0.96	1/4-20	3/16 x 3/16 x 1 5/8	⇨🕮 346
SK 6282	11.38	0.31	4.38	1.625 +0.0000 -0.0005	1.79	5/8-11	3/8 x 3/8 x 3 5/8	⇨🕮 348
SK 6382	8.36	0.31	3.12	1.500 +0.0000 -0.0005	1.66	5/8-11	3/8 x 3/8 x 2 1/2	⇨🕮 350
SK 6382 W VL	11.38	0.31	4.38	1.625 +0.0000 -0.0005	1.79	5/8-11	3/8 x 3/8 x 3 5/8	⇨🕮 350
SK 6382/22	6.80	0.31	2.00	0.875 +0.0000 -0.0005	0.96	1/4-20	3/16 x 3/16 x 1 5/8	⇨🕮 374
SK 6382/32	6.80	0.31	2.00	0.875 +0.0000 -0.0005	0.96	1/4-20	3/16 x 3/16 x 1 5/8	⇨🕮 374

Send Quote Requests to info@automatedpt.com
Call +1(800)985-6929 To Order or Order Online At Nordgearmotors.com

DRIVESYSTEMS



Solid Input Shaft
Type - W

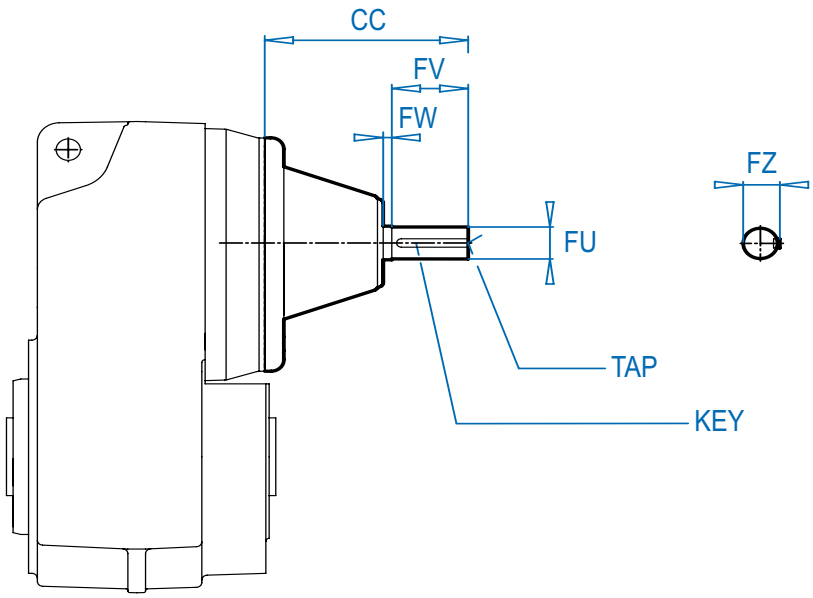

Unit	CC	FW	FV	FU	FZ	TAP	KEY	Unit Dimensions
SK 7282	11.38	0.31	4.38	1.625 +0.0000 -0.0005	1.79	5/8-11	3/8 x 3/8 x 3 5/8	⇨🕮 352
SK 7382	11.38	0.31	4.38	1.625 +0.0000 -0.0005	1.79	5/8-11	3/8 x 3/8 x 3 5/8	⇨🕮 354
SK 7382/22	6.80	0.31	2.00	0.875 +0.0000 -0.0005	0.96	1/4-20	3/16 x 3/16 x 1 5/8	⇨🕮 374
SK 7382/32	6.80	0.31	2.00	0.875 +0.0000 -0.0005	0.96	1/4-20	3/16 x 3/16 x 1 5/8	⇨🕮 374
SK 8282	15.62	0.47	5.50	2.500 +0.0000 -0.0005	2.77	3/4-10	5/8 x 5/8 x 4 5/8	⇨🕮 356
SK 8382	11.38	0.31	4.38	1.625 +0.0000 -0.0005	1.79	5/8-11	3/8 x 3/8 x 3 5/8	⇨🕮 358
SK 8382 W VL	15.62	0.47	5.50	2.500 +0.0000 -0.0005	2.77	3/4-10	5/8 x 5/8 x 4 5/8	⇨🕮 358
SK 8382/32	6.80	0.31	2.00	0.875 +0.0000 -0.0010	0.96	1/4-20	3/16 x 3/16 x 1 5/8	⇨🕮 374
SK 8382/42	8.36	0.31	3.12	1.500 +0.0000 -0.0005	1.66	5/8-11	3/8 x 3/8 x 2 1/2	⇨🕮 375
SK 9282	15.62	0.47	5.50	2.500 +0.0000 -0.0010	2.77	3/4-10	5/8 x 5/8 x 4 5/8	⇨🕮 360
SK 9382	11.38	0.31	4.38	1.625 +0.0000 -0.0005	1.79	5/8-11	3/8 x 3/8 x 3 5/8	⇨🕮 362
SK 9382 W VL	15.62	0.47	5.50	2.500 +0.0000 -0.0010	2.77	3/4-10	5/8 x 5/8 x 4 5/8	⇨🕮 362
SK 9382/42	8.36	0.31	3.12	1.500 +0.0000 -0.0005	1.66	5/8-11	3/8 x 3/8 x 2 1/2	⇨🕮 375
SK 9382/52	8.36	0.31	3.12	1.500 +0.0000 -0.0005	1.66	5/8-11	3/8 x 3/8 x 2 1/2	⇨🕮 375
SK 10282	9.96	0.53	5.51	2.750 +0.0000 -0.0010	3.03	3/4-10	5/8 x 5/8 x 4 5/8	⇨🕮 364
SK 10382	9.96	0.53	5.51	2.750 +0.0000 -0.0010	3.03	3/4-10	5/8 x 5/8 x 4 5/8	⇨🕮 366
SK 10382/52	8.36	0.31	3.12	1.500 +0.0000 -0.0005	1.66	5/8-11	3/8 x 3/8 x 2 1/2	⇨🕮 375
SK 11282	9.96	0.53	5.51	2.750 +0.0000 -0.0010	3.03	3/4-10	5/8 x 5/8 x 4 5/8	⇨🕮 368
SK 11382	9.96	0.53	5.51	2.750 +0.0000 -0.0010	3.03	3/4-10	5/8 x 5/8 x 4 5/8	⇨🕮 370
SK 11382/52	8.36	0.31	3.12	1.500 +0.0000 -0.0005	1.66	5/8-11	3/8 x 3/8 x 2 1/2	⇨🕮 375
SK 12382	9.96	0.53	5.51	2.750 +0.0000 -0.0010	3.03	3/4-10	5/8 x 5/8 x 4 5/8	⇨🕮 372

Send Quote Requests to info@automatedpt.com
Call +1(800)985-6929 To Order or Order Online At Nordgearmotors.com

DIMENSIONS
Dimensions in mm

IEC Inputs



DRIVESYSTEMS

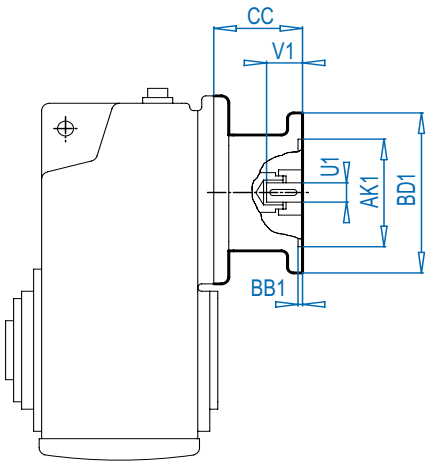

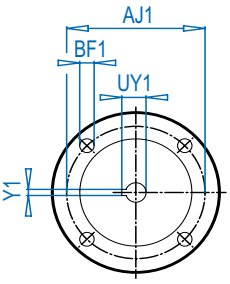

Figure 1
4 Bolt Flange

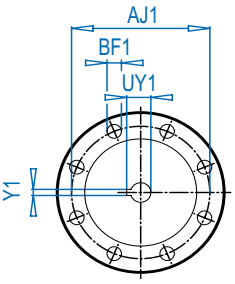

Figure 2
8 Bolt Flange
(For IEC 225-315)

IEC Dimensions (mm)

Input	AJ1	AK1	BB1	BD1	BF1	U1	V1	UY1	Y1	Flange
IEC 63	115	95	3.5	140	M8	11	23	12.8	4	Fig. 1
IEC 71	130	110	4.0	160	M8	14	30	16.3	5	Fig. 1
IEC 80	165	130	4.0	200	M10	19	40	21.8	6	Fig. 1
IEC 90	165	130	4.0	200	M10	24	50	27.3	8	Fig. 1
IEC 100	215	180	5.0	250	M12	28	60	31.3	8	Fig. 1
IEC 112	215	180	5.0	250	M12	28	60	31.3	8	Fig. 1
IEC 132	265	230	5.0	300	M12	38	80	41.3	10	Fig. 1
IEC 160	300	250	6.0	350	M16	42	110	45.3	12	Fig. 1
IEC 180	300	250	6.0	350	M16	48	110	51.8	14	Fig. 1
IEC 200	350	300	6.0	400	M16	55	110	59.3	16	Fig. 1
IEC 225	400	350	6.0	450	M16	60	140	64.4	18	Fig. 2
IEC 250	500	450	6.0	550	M16	65	140	69.4	18	Fig. 2
IEC 280	500	450	6.0	550	M16	75	140	79.9	20	Fig. 2
IEC 315	600	550	7.0	660	M20	80	170	85.4	22	Fig. 2

CC Dimensions

Unit	IEC63	IEC 71	IEC 80	IEC 90	IEC 100	IEC 112	IEC 132	IEC 160	IEC 180	IEC 200	IEC 225	IEC 250	IEC 280	IEC 315
SK 0182NB	3.35	3.35	4.06	4.06	4.96	4.96	–	–	–	–	–	–	–	–
SK 0282NB	3.35	3.35	4.06	4.06	4.96	4.96	–	–	–	–	–	–	–	–
SK 1382NB	3.35	3.35	4.06	4.06	4.96	4.96	–	–	–	–	–	–	–	–
SK 1282	3.35	3.50	4.13	4.13	5.12	5.12	–	–	–	–	–	–	–	–
SK 1282/02	3.35	3.50	4.13	4.13	5.12	5.12	–	–	–	–	–	–	–	–
SK 2282	–	3.46	4.25	4.25	4.92	4.92	6.14	–	–	–	–	–	–	–
SK 2282/02	3.35	3.50	4.13	4.13	5.12	5.12	–	–	–	–	–	–	–	–
SK 2382	3.35	3.50	4.13	4.13	5.12	5.12	–	–	–	–	–	–	–	–
SK 3282	–	3.46	4.25	4.25	4.92	4.92	6.14	–	–	–	–	–	–	–
SK 3282/12	3.35	3.50	4.13	4.13	5.12	5.12	–	–	–	–	–	–	–	–
SK 3382	3.35	3.50	4.13	4.13	5.12	5.12	–	–	–	–	–	–	–	–
SK 4282	–	–	–	4.29	5.24	5.24	7.48	7.64	7.64	–	–	–	–	–
SK 4282/12	3.35	3.50	4.13	4.13	5.12	5.12	–	–	–	–	–	–	–	–
SK 4382	–	3.46	4.25	4.25	4.92	4.92	6.14	–	–	–	–	–	–	–
SK 5282	–	–	–	4.29	5.24	5.24	7.48	7.64	7.64	–	–	–	–	–
SK 5282/12	3.35	3.50	4.13	4.13	5.12	5.12	–	–	–	–	–	–	–	–
SK 5382	–	3.46	4.25	4.25	4.92	4.92	6.14	–	–	–	–	–	–	–
SK 6282	–	–	–	–	5.00	5.00	6.97	10.47	10.47	9.02	11.93	11.93	11.93	–
SK 6382	–	–	–	4.29	5.24	5.24	7.48	7.64	7.64	–	–	–	–	–
SK 6382/22	–	3.46	4.25	4.25	4.92	4.92	6.14	–	–	–	–	–	–	–
SK 6382/32	–	3.46	4.25	4.25	4.92	4.92	6.14	–	–	–	–	–	–	–

Send Quote Requests to info@automatedpt.com
Call +1(800)985-6929 To Order or Order Online At Nordgearmotors.com

DRIVESYSTEMS

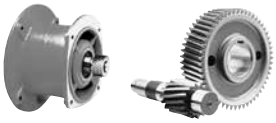

IEC Inputs

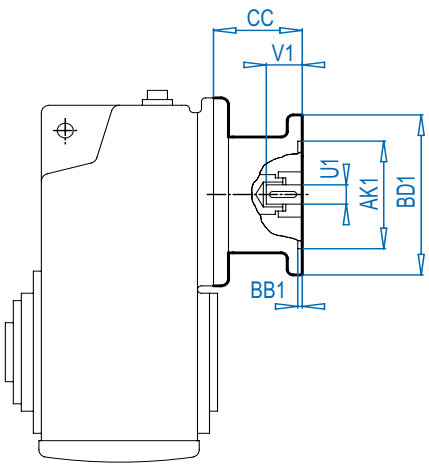

Figure 1
4 Bolt Flange

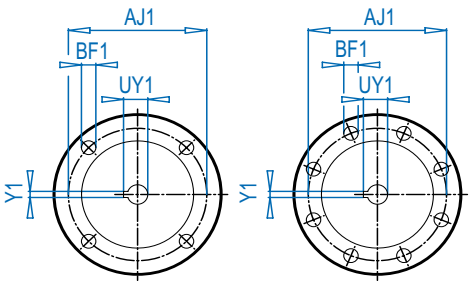

Figure 2
8 Bolt Flange
(For IEC 225-315)

IEC Dimensions (mm)

Input	AJ1	AK1	BB1	BD1	BF1	U1	V1	UY1	Y1	Flange
IEC 63	115	95	3.5	140	M8	11	23	12.8	4	Fig. 1
IEC 71	130	110	4.0	160	M8	14	30	16.3	5	Fig. 1
IEC 80	165	130	4.0	200	M10	19	40	21.8	6	Fig. 1
IEC 90	165	130	4.0	200	M10	24	50	27.3	8	Fig. 1
IEC 100	215	180	5.0	250	M12	28	60	31.3	8	Fig. 1
IEC 112	215	180	5.0	250	M12	28	60	31.3	8	Fig. 1
IEC 132	265	230	5.0	300	M12	38	80	41.3	10	Fig. 1
IEC 160	300	250	6.0	350	M16	42	110	45.3	12	Fig. 1
IEC 180	300	250	6.0	350	M16	48	110	51.8	14	Fig. 1
IEC 200	350	300	6.0	400	M16	55	110	59.3	16	Fig. 1
IEC 225	400	350	6.0	450	M16	60	140	64.4	18	Fig. 2
IEC 250	500	450	6.0	550	M16	65	140	69.4	18	Fig. 2
IEC 280	500	450	6.0	550	M16	75	140	79.9	20	Fig. 2
IEC 315	600	550	7.0	660	M20	80	170	85.4	22	Fig. 2

CC Dimensions

Unit	IEC63	IEC 71	IEC 80	IEC 90	IEC 100	IEC 112	IEC 132	IEC 160	IEC 180	IEC 200	IEC 225	IEC 250	IEC 280	IEC 315
SK 7282	–	–	–	–	5.00	5.00	6.97	10.47	10.47	9.02	11.93	11.93	11.93	–
SK 7382	–	–	–	–	5.00	5.00	6.97	10.47	10.47	9.02	11.93	11.93	11.93	–
SK 7382/22	–	3.46	4.25	4.25	4.92	4.92	6.14	–	–	–	–	–	–	–
SK 7382/32	–	3.46	4.25	4.25	4.92	4.92	6.14	–	–	–	–	–	–	–
SK 8282	–	–	–	–	–	–	6.97	10.47	10.47	9.02	11.93	11.93	11.93	15.04
SK 8382	–	–	–	–	5.00	5.00	6.97	10.47	10.47	9.02	11.93	11.93	11.93	–
SK 8382/32	–	3.46	4.25	4.25	4.92	4.92	6.14	–	–	–	–	–	–	–
SK 8382/42	–	–	–	4.29	5.24	5.24	7.48	7.64	7.64	–	–	–	–	–
SK 9282	–	–	–	–	–	–	6.97	10.47	10.47	9.02	11.93	11.93	11.93	15.04
SK 9382	–	–	–	–	5.00	5.00	6.97	10.47	10.47	9.02	11.93	11.93	11.93	–
SK 9382/42	–	–	–	4.29	5.24	5.24	7.48	7.64	7.64	–	–	–	–	–
SK 9382/52	–	–	–	4.29	5.24	5.24	7.48	7.64	7.64	–	–	–	–	–
SK 10282	–	–	–	–	–	–	–	10.47	10.47	9.02	11.93	11.93	11.93	15
SK 10382	–	–	–	–	–	–	–	10.47	10.47	9.02	11.93	11.93	11.93	15
SK 10382/52	–	–	–	4.29	5.24	5.24	7.48	7.64	7.64	–	–	–	–	–
SK 11282	–	–	–	–	–	–	–	10.47	10.47	9.02	11.93	11.93	11.93	15
SK 11382	–	–	–	–	–	–	–	10.47	10.47	9.02	11.93	11.93	11.93	15
SK 11382/52	–	–	–	4.29	5.24	5.24	7.48	7.64	7.64	–	–	–	–	–
SK 12382	–	–	–	–	–	–	–	10.47	10.47	9.02	11.93	11.93	11.93	15

Send Quote Requests to info@automatedpt.com
Call +1(800)985-6929 To Order or Order Online At Nordgearmotors.com

B14 Flange Design Option Z



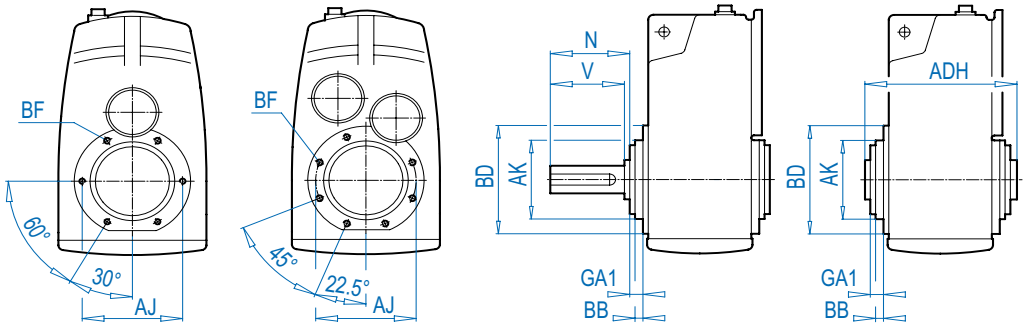

SK 1282 - SK 5382 SK 6282 - SK 8382

Type **Mounting dimensions flange B14** **Shaft dimensions**

	BD	AK	GA1	AJ	BB	BF(mm)	ADH	V	N
SK 0182 NB .Z **SK 0282 NB .Z** **SK 1382 NB .Z**	⇨📖 316 ⇨📖 322 ⇨📖 328								
SK 1282 .Z	5.51	3.740	0.51	4.53	0.24	M8 x 13	4.80	2.75	2.90
SK 2282 .Z **SK 2382 .Z**	6.30	4.331	0.47	5.12	0.20	M8 x 13	5.47	2.75	2.95
SK 3282 .Z **SK 3382 .Z**	7.87	5.118	0.28	6.50	0.28	M10 x 16	6.85	3.50	3.74
SK 4282 .Z **SK 4382 .Z**	9.06	6.299	0.43	7.64	0.20	M12 x 20	7.68	4.00	4.28
SK 5282 .Z **SK 5382 .Z**	9.84	7.087	0.35	8.46	0.20	M12 x 20	9.06	5.00	5.30
SK 6282 .Z **SK 6382 .Z**	11.81	9.055	0.43	10.43	0.16	M12 x 20	11.42	5.50	5.78
SK 7282 .Z **SK 7382 .Z**	13.78	9.843	0.43	11.81	0.20	M16 x 25	12.20	6.75	6.95
SK 8282 .Z **SK 8382 .Z**	15.75	11.811	0.51	13.78	0.20	M16 x 25	14.41	8.50	8.78

ALTERNATE SHAFTS SEE PAGES 388 - 393

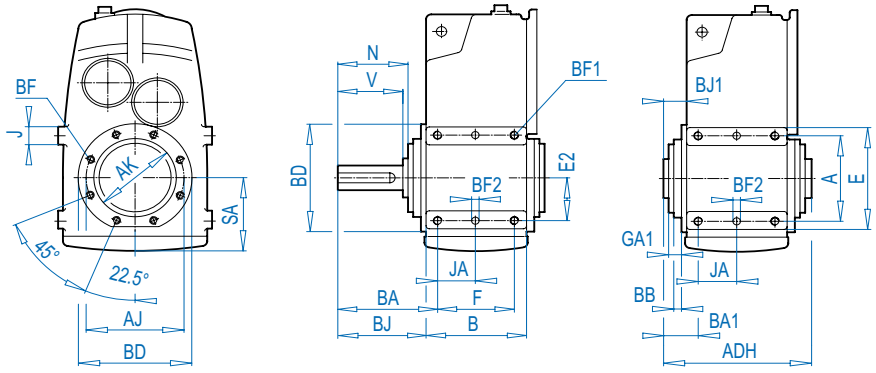

Type **Mounting dimensions flange B14** **Foot** **Outline dimensions** **Shaft dimensions**

	BD	AK	GA1	AJ	BB	BF (mm)	F A	B E	J JA	BF2 (mm) BF1 (mm)	SA E2	BA BJ	BA1 BJ1	ADH	V N
SK 9282 .Z **SK 9382 .Z**	17.72	13.780	0.55	15.75	0.20	M20 x 30	9.65 14.17	12.05 17.32	3.15 4.82	Ø25 x 30 M30 x 45	11.61 7.09	12.40 11.16	2.56 1.32	16.93	9.84 10.23
SK 10282 .Z **SK 10382 .Z**	⇨📖 364 ⇨📖 366														
SK 11282 .Z **SK 11382 .Z**	⇨📖 368 ⇨📖 370														
SK 12382 .Z	⇨📖 372														

Send Quote Requests to info@automatedpt.com
Call +1(800)985-6929 To Order or Order Online At Nordgearmotors.com

DRIVESYSTEMS





B14 Pin Hole Locations

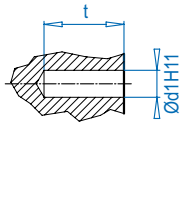

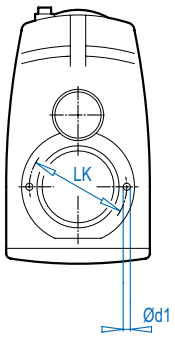

SK 0282NB -
SK 1382NB

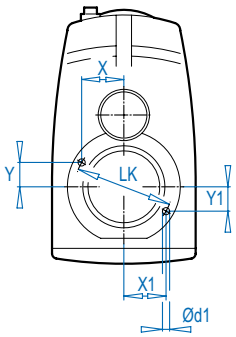

SK 1282 -
SK 5382

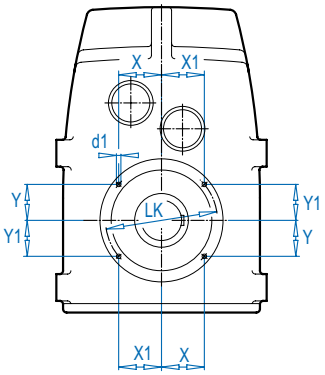

SK 6282 -
SK 12382

Type **Outline dimensions**

	$d1^{H11}$ x t (mm)	LK	X	X1	Y	Y1
SK 0182 NB .Z	Ø 6 x 10	3.346	1.616	-	0.433	-
SK 0282 NB .Z	Ø 6 x 12	3.937	-	-	-	-
SK 1382 NB .Z	Ø 8 x 12	4.528	-	-	-	-
SK 1282 .Z	Ø 8 x 12	4.528	2.210	2.210	0.490	0.490
SK 2282 .Z **SK 2382 .Z**	Ø 8 x 12	5.118	2.472	2.472	0.662	0.662
SK 3282 .Z **SK 3382 .Z**	Ø 10 x 15	6.496	3.171	3.171	0.703	0.703
SK 4282 .Z **SK 4382 .Z**	Ø 12 x 20	7.638	3.689	3.689	0.989	0.989
SK 5282 .Z **SK 5382 .Z**	Ø 12 x 20	8.465	4.132	4.132	0.916	0.916
SK 6282 .Z **SK 6382 .Z**	Ø 12 x 20	10.433	4.400	4.400	2.803	2.803
SK 7282 .Z **SK 7382 .Z**	Ø 16 x 30	11.811	4.981	4.981	3.173	3.173
SK 8282 .Z **SK 8382 .Z**	Ø 16 x 30	13.780	5.811	5.811	3.702	3.702
SK 9282 .Z **SK 9382 .Z**	Ø 16 x 30	15.748	6.641	6.641	4.231	4.231
SK 10282 .Z **SK 10382 .Z**	Ø 25 x 35	19.685	6.960	8.063	6.960	5.645
SK 11282 .Z **SK 11382 .Z**	Ø 25 x 25	19.685	6.960	8.063	6.960	5.645
SK 12382 .Z	Ø 25 x 25	19.685	6.960	8.063	6.960	5.645

Send Quote Requests to info@automatedpt.com
Call +1(800)985-6929 To Order or Order Online At Nordgearmotors.com

Footed Housing Option X





DRIVESYSTEMS

AX / VX

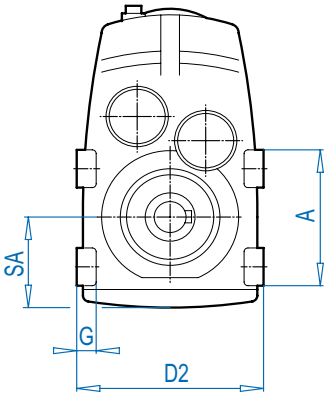

AX

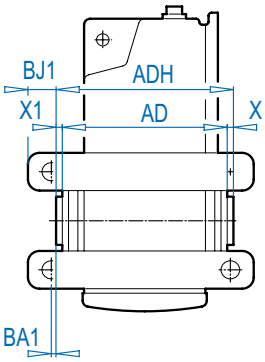

VX

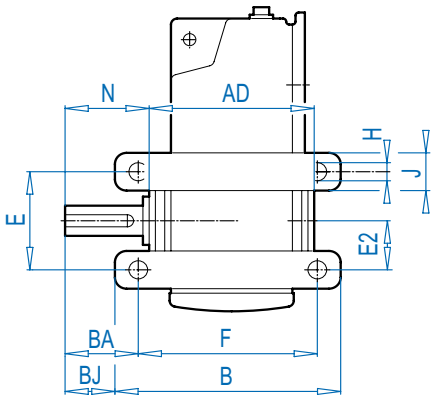

Type	Mounting dimensions				Outline dimensions														
	F	E	G	B	A	J	H	E2	SA	BA	BJ	BA1	BJ1	AD	ADH	X1	X	D2	N
SK 1282 .X	5.59	3.15	0.63	6.46	4.33	1.18	0.43	1.69	3.03	2.47	2.04	0.28	0.71	4.53	4.80	0.16	0.12	6.69	2.90
SK 2282 .X SK 2382 .X	6.50	3.15	0.79	7.68	4.57	1.42	0.51	1.93	3.54	2.54	1.95	0.22	0.81	4.96	5.47	0.20	0.31	7.87	2.95
SK 3282 .X SK 3382 .X	7.68	4.92	0.98	8.86	6.50	1.57	0.51	2.44	4.21	3.11	2.52	0.43	1.02	6.38	6.85	0.24	0.24	9.29	3.74
SK 4282 .X SK 4382 .X	8.66	4.92	1.10	10.24	6.69	1.77	0.71	2.87	4.84	3.96	3.17	0.37	1.16	7.13	7.68	0.28	0.28	11.02	4.28
SK 5282 .X SK 5382 .X	9.84	6.89	1.38	11.42	8.66	1.77	0.71	3.54	5.75	4.63	3.84	0.49	1.28	8.46	9.05	0.30	0.30	12.60	5.30
SK 6282 .X SK 6382 .X	12.99	7.68	1.57	15.35	10.43	2.76	1.02	3.98	6.77	4.82	3.64	1.02	2.20	10.75	11.42	0.33	0.33	14.17	5.78
SK 7282 .X SK 7382 .X	14.57	8.46	1.77	17.32	12.01	3.54	1.30	4.45	7.76	5.51	4.13	1.18	2.56	11.73	12.20	0.24	0.24	16.69	6.95
SK 8282 .X SK 8382 .X	16.54	9.45	2.36	19.69	13.78	4.33	1.30	4.88	8.86	7.48	5.90	1.02	2.60	13.86	14.41	0.28	0.28	19.69	8.78

ALTERNATE SHAFTS SEE PAGES 388 - 393

AXSH / VX

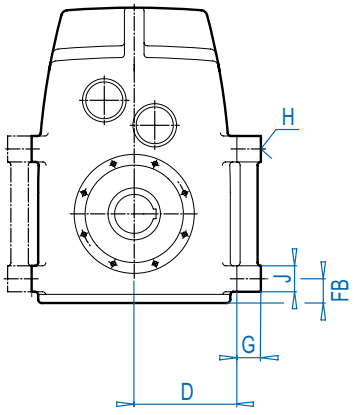

VX

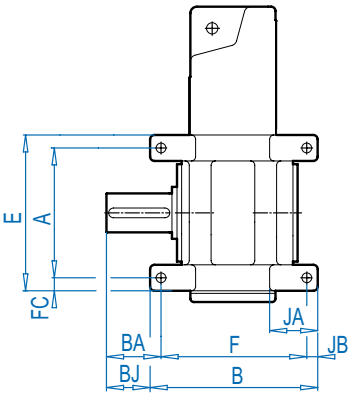

AXSH

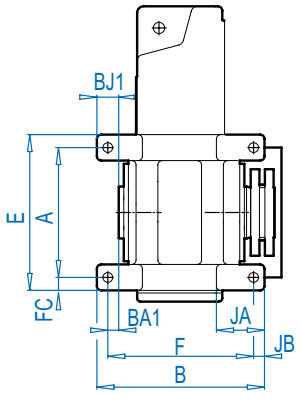

Type	Mounting dimensions				Outline dimensions											
	F	E	G	B	A	J	H	JA	FB	FC	JB	BA	BJ	BA1	BJ1	D
SK 9282 .X SK 9382 .X	18.50	18.11	2.76	22.44	14.17	3.94	1.77	7.48	4.53	1.97	1.97	8.86	6.89	0.98	2.95	12.60
SK 10282 .X SK 10382 .X	17.72	20.87	3.94	20.87	16.54	4.33	1.54	6.69	3.94	2.17	1.57	12.32	10.75	0.51	1.06	13.39
SK 11282 .X SK 11382 .X	19.69	28.35	4.33	23.62	23.62	4.72	1.77	7.87	4.41	2.36	1.97	11.93	9.96	0.12	1.85	18.50
SK 12282 .X	19.69	28.35	4.33	23.62	23.62	4.72	1.77	7.87	4.41	2.36	1.97	11.93	9.96	0.12	1.85	18.50

Send Quote Requests to info@automatedpt.com
Call +1(800)985-6929 To Order or Order Online At Nordgearmotors.com

DRIVESYSTEMS





Output Shaft Protection Covers Option H or H66

SK ... AH
SK ... AZH

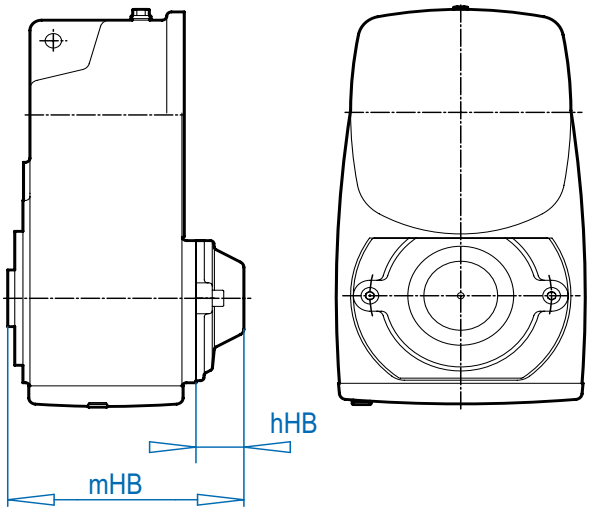

Type

	hHB	mHB
SK 0182 NB AH SK 0182 NB AZH	0.98	4.80
SK 0282 NB AH SK 0282 NB AZH	1.22	5.90
SK 1382 NB AH SK 1382 NB AZH	1.42	8.27
SK 1282 AH SK 1282 AZH	1.46	5.90
SK 2282 AH SK 2282 AZH SK 2382 AH SK 2382 AZH	1.69	6.85
SK 3282 AH SK 3282 AZH SK 3382 AH SK 3382 AZH	1.77	8.39
SK 4282 AH SK 4282 AZH SK 4382 AH SK 4382 AZH	1.77	9.17
SK 5282 AH SK 5282 AZH SK 5382 AH SK 5382 AZH	2.09	10.87
SK 6282 AH SK 6282 AZH SK 6382 AH SK 6382 AZH	2.09	13.19
SK 7282 AH SK 7282 AZH SK 7382 AH SK 7382 AZH	2.09	14.06
SK 8282 AH SK 8282 AZH SK 8382 AH SK 8382 AZH	2.76	16.38
SK 9282 AH SK 9282 AZH SK 9382 AH SK 9382 AZH	3.31	18.90

SK ... AH66
SK ... AZH66

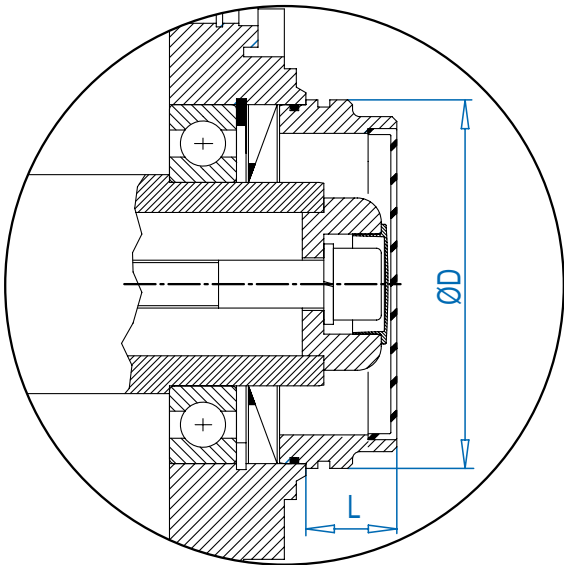

Type

	ØD	L
SK 1282 AH66 SK 1282 AZH66	3.15	0.98
SK 2282 AH66 SK 2282 AZH66	2.20	1.50
SK 3282 AH66 SK 3282 AZH66	4.09	1.38
SK 4282 AH66 SK 4282 AZH66	4.09	1.34
SK 5282 AH66 SK 5282 AZH66	6.06	1.50
SK 6282 AH66 SK 6282 AZH66	7.40	1.73
SK 7282 AH66 SK 7282 AZH66	8.46	1.38
SK 8282 AH66 SK 8282 AZH66	9.65	1.97

Send Quote Requests to info@automatedpt.com
Call +1(800)985-6929 To Order or Order Online At Nordgearmotors.com

Send Quote Requests to info@automatedpt.com
Call +1(800)985-6929 To Order or Order Online At Nordgearmotors.com

Agitator Design Option VL2 & VL3





DRIVESYSTEMS

SK ... AFVL2
SK ... AFVL3

DIMENSIONS
Dimensions in Inches

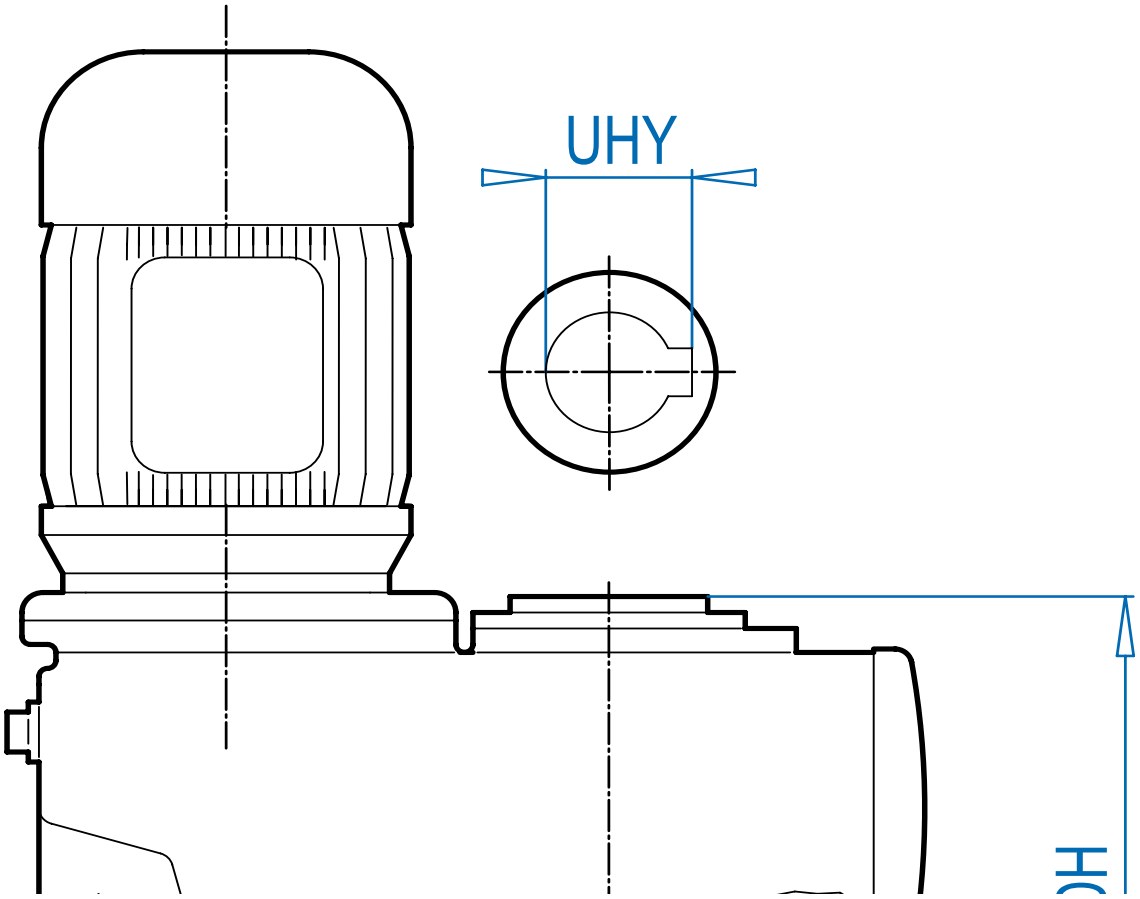

Type	Outline dimensions								Shaft dimensions						
	BD	AK	GA	AJ	BB	AH1	BF	G (mm)	UH	UYH	ADH	LB	LH	VE I	VE II
SK 1282 AF..	7.87	5.118	0.47	6.50	0.14	2.95	0.43	M12 x 1.5	1.1875	1.31	7.09	1.57	1.57	6.13	6.88
SK 2282 AF..	9.84	7.087	0.63	8.46	0.16	3.39	0.55	M12 x 1.5	1.4375	1.61	8.19	1.97	1.97	7.52	7.93
SK 3282 AF..	11.81	9.055	0.79	10.43	0.16	3.35	0.55	M12 x 1.5	1.625	1.73	9.69	2.28	2.28	8.98	9.31
SK 4282 AF..	11.81	9.055	0.79	10.43	0.16	4.45	0.55	M12 x 1.5	2.0625	2.23	11.42	2.56	2.56	10.07	11.04
SK 5282 AF..	13.78	9.843	0.79	11.81	0.20	5.31	0.71	M12 x 1.5	2.4375	2.71	13.70	3.11	3.11	12.23	13.28
SK 6282 AF..	15.75	11.811	0.87	13.78	0.20	6.54	0.71	M24 x 1.5	2.750	3.03	17.19	4.72	4.72	16.73	16.77
SK 7282 AF..	17.72	13.780	0.94	15.75	0.20	7.24	0.71	M24 x 1.5	3.1875	3.40	18.78	4.96	4.96	18.26	18.36
SK 8282 AF..	21.65	17.717	1.10	19.69	0.20	8.27	0.71	M30 x 2	4.000	4.32	21.89	6.06	6.06	20.01	21.43
SK 9282 AF..	25.98	21.654	1.26	23.62	0.24	10.31	0.87	M30 x 2	4.750	5.11	26.30	7.32	7.32	24.55	25.84

Send Quote Requests to info@automatedpt.com
Call +1(800)985-6929 To Order or Order Online At Nordgearmotors.com




Agitator Design Option VL2 & VL3

SK ... VFVL2
SK ... VFVL3

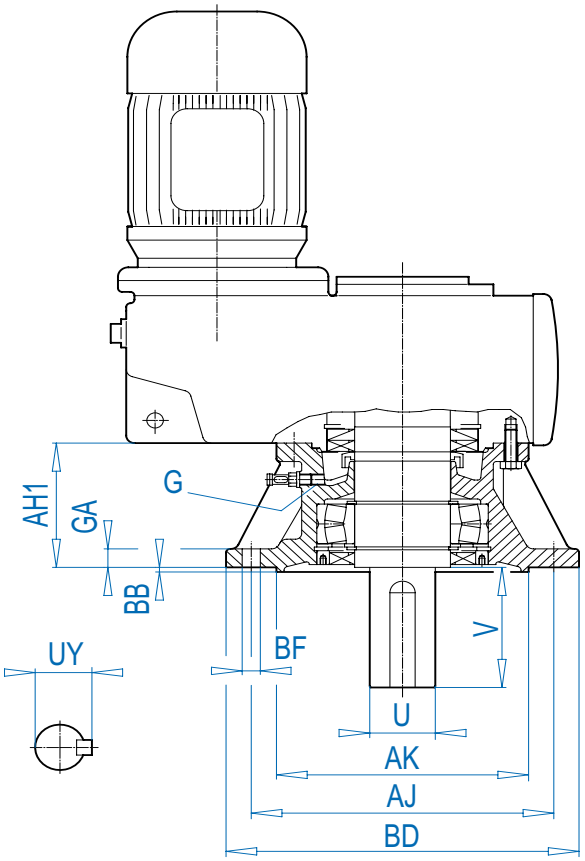

Solid Shaft

Type	Outline dimensions								Shaft dimensions			
	BD	AK	GA	AJ	BB	AH1	BF	G (mm)	U	V	UY	Key
SK 1282 VF.. SK 1382 VF..	7.87	5.118	0.47	6.50	0.14	2.95	0.43	M12 x 1.5	1.250	2.75	1.36	1/4 x 1/4 x 2-1/4
SK 2282 VF.. SK 2382 VF..	9.84	7.087	0.63	8.46	0.16	3.39	0.55	M12 x 1.5	1.375	2.75	1.51	5/16 x 5/16 x 2-1/4
SK 3282 VF.. SK 3382 VF..	11.81	9.055	0.79	10.43	0.16	3.35	0.55	M12 x 1.5	1.875	3.50	2.09	1/2 x 1/2 x 2-3/4
SK 4282 VF.. SK 4382 VF..	11.81	9.055	0.79	10.43	0.16	4.45	0.55	M12 x 1.5	2.250	4.00	2.47	1/2 x 1/2 x 3-1/4
SK 5282 VF.. SK 5382 VF..	13.78	9.843	0.79	11.81	0.20	5.31	0.71	M12 x 1.5	2.500	5.00	2.77	5/8 x 5/8 x 4
SK 6282 VF.. SK 6382 VF..	15.75	11.811	0.87	13.78	0.20	6.54	0.71	M24 x 1.5	3.000	5.50	3.33	3/4 x 3/4 x 4-1/2
SK 7282 VF.. SK 7382 VF..	17.72	13.780	0.94	15.75	0.20	7.24	0.71	M24 x 1.5	3.500	6.75	3.88	7/8 x 7/8 x 5-1/2
SK 8282 VF.. SK 8382 VF..	21.65	17.717	1.10	19.69	0.20	8.27	0.71	M30 x 2	4.250	8.50	4.69	1 x 1 x 7-1/4
SK 9282 VF.. SK 9382 VF..	25.98	21.654	1.26	23.62	0.24	10.31	0.87	M30 x 2	5.250	9.84	5.80	1-1/4 x 1-1/4 x 8-3/8
SK 10282 VF.. SK 10382 VF..	25.98	21.654	1.38	23.62	0.31	11.89	1.02	M30 x 2	6.250	11.81	6.91	1-1/2 x 1-1/2 x 10
SK 11282 VF.. SK 11382 VF..	25.98	21.654	1.38	23.62	0.31	11.89	1.02	M30 x 2	7.000	11.81	7.77	1-3/4 x 1-3/4 x 10
SK 12382 VF..	25.98	21.654	1.38	23.62	0.31	11.89	1.02	M30 x 2	7.000	11.81	7.77	1-3/4 x 1-3/4 x 10

Send Quote Requests to info@automatedpt.com
Call +1(800)985-6929 To Order or Order Online At Nordgearmotors.com

Agitator Design Option VL 2 & VL 3



DRIVESYSTEMS

SK ... AFSVL2
SK ... AFSVL3

DIMENSIONS — Dimensions in Inches

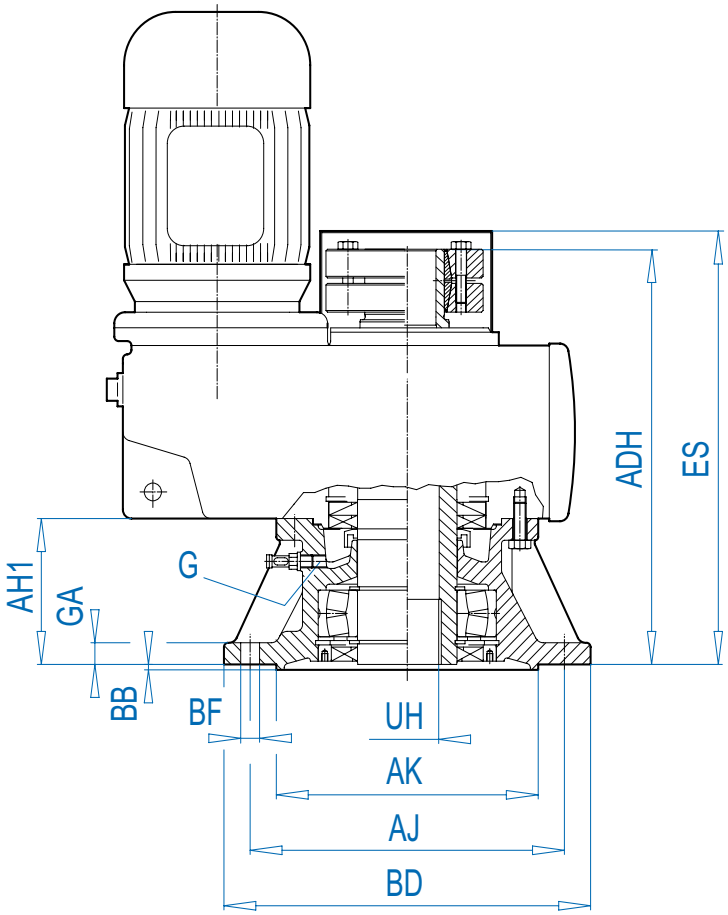

Shrink Disc

Type	Outline dimensions								Shaft dimensions		
	BD	AK	GA	AJ	BB	AH1	BF	G (mm)	UH	ADH	ES
SK 1282 AFS..	7.87	5.118	0.47	6.50	0.14	2.95	0.43	M12 x 1.5	1.250	8.66	9.13
SK 2282 AFS..	9.84	7.087	0.63	8.46	0.16	3.39	0.55	M12 x 1.5	1.500	10.39	10.94
SK 3282 AFS..	11.81	9.055	0.79	10.43	0.16	3.35	0.55	M12 x 1.5	1.625	11.69	12.44
SK 4282 AFS..	11.81	9.055	0.79	10.43	0.16	4.45	0.55	M12 x 1.5	2.000	14.02	14.88
SK 5282 AFS..	13.78	9.843	0.79	11.81	0.20	5.31	0.71	M12 x 1.5	2.500	16.26	17.15
SK 6282 AFS..	15.75	11.811	0.87	13.78	0.20	6.54	0.71	M24 x 1.5	3.000	20.35	21.18
SK 7282 AFS..	17.72	13.780	0.94	15.75	0.20	7.24	0.71	M24 x 1.5	3.188	22.13	22.83
SK 8282 AFS..	21.65	17.717	1.10	19.69	0.20	8.27	0.71	M30 x 2	4.000	25.39	26.38
SK 9282 AFS..	25.98	21.654	1.26	23.62	0.24	10.31	0.87	M30 x 2	4.750	30.43	31.26
SK 10282 AFS..	25.98	21.654	1.38	23.62	0.31	11.89	1.02	M30 x 2	6.250	37.17	38.07
SK 11282 AFS..	25.98	21.654	1.38	23.62	0.31	11.89	1.02	M30 x 2	7.000	37.72	39.25
SK 12382 AFS..	25.98	21.654	1.38	23.62	0.31	11.89	1.02	M30 x 2	7.000	44.45	45.91

Send Quote Requests to info@automatedpt.com
Call +1(800)985-6929 To Order or Order Online At Nordgearmotors.com

DRIVESYSTEMS





Rubber Buffers Option G & VG

SK ... ..G

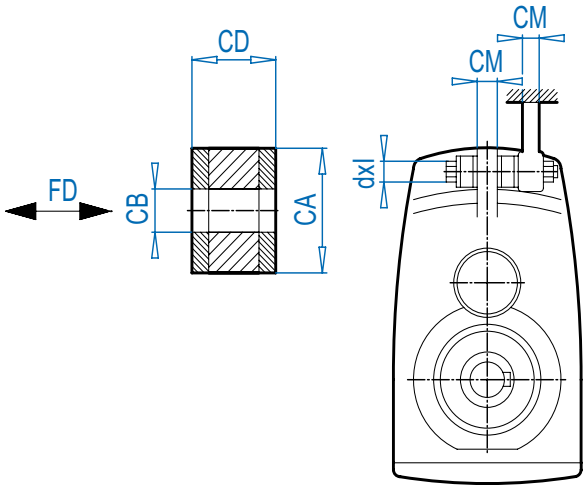

SK ... .VG

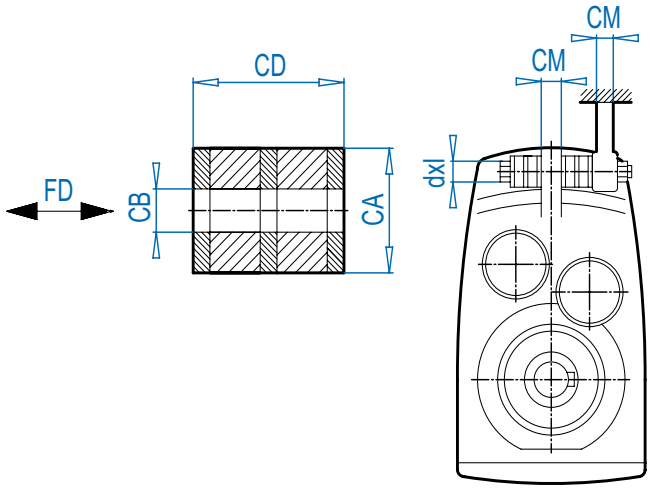

SK ... G

Type	CB	CA	CD	CM	dxl (mm)	FD (lbs)	s_{FD}*(mm)
SK 0182NB ..G	0.43	1.18	0.59	0.39	M10 x 70	206	1.5
SK 0282NB ..G	0.43	1.18	0.59	0.47	M10 x 70	235	1.7
SK 1382NB ..G	0.43	1.18	0.59	0.55	M10 x 80	504	3.6
SK 1282 ..G	0.43	1.18	0.59	0.55	M10 x 80	404	2,8
SK 2282 ..G SK 2382 ..G.	0.49	1.57	0.59	0.63	M12 x 90	600	1.8
SK 3282 ..G SK 3382 ..G	0.49	1.57	0.59	0.71	M12 x 90	914 935	2.9
SK 4282 ..G SK 4382 ..G	0.83	2.36	1.18	0.87	M20 x 150	1601 1663	7.3
SK 5282 ..G SK 5382 ..G	0.83	2.36	1.18	1.10	M20 x 150	2135 2111	9.4
SK 6282 ..G SK 6382 ..G	0.98	3.15	1.57	1.38	M24 x 190	2860 3782	9.2
SK 7282 ..G SK 7382 ..G	0.98	3.15	1.57	1.57	M24 x 200	3630 4681	11.4
SK 8282 ..G SK 8382 ..G	1.22	3.94	1.97	1.97	M30 x 260	5138 6387	16.3
SK 9282 ..G SK 9382 ..G	1.22	3.94	1.97	2.17	M30 x 260	6908 9785	24.4

*** Distance buffers compress at force.**

SK ... VG

Type	CB	CA	CD	CM	dxl (mm)	FD (lbs)	s_{FD}*(mm)
SK 7282 .VG SK 7382 .VG	0.98	3.35	2.36	1.57	M24 x 240	9450	12.2
SK 8282 .VG SK 8382 .VG	1.22	4.33	3.54	1.97	M30 x 340	12825	19.3
SK 9282 .VG SK 9382 .VG	1.22	5.51	4.33	2.17	M30 x 380	19575	21.2
SK 10282 .VG SK 10382 .VG	1.22	5.51	4.33	3.15	M30 x 430	25425	27.4
SK 11282 .VG SK 11382 .VG	1.93	7.09	5.91	3.54	M48 x 550	36450	38.5
SK 12382 .VG	1.93	7.09	5.91	3.54	M48 x 550	47475	50.2

*** Distance buffers compress at force.**

Send Quote Requests to info@automatedpt.com
Call +1(800)985-6929 To Order or Order Online At Nordgearmotors.com

Solid Shaft Dimensions

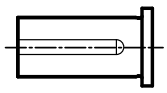

DRIVESYSTEMS

Solid Shaft Dimensions (VZ/VF)

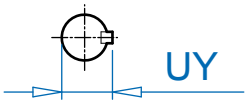

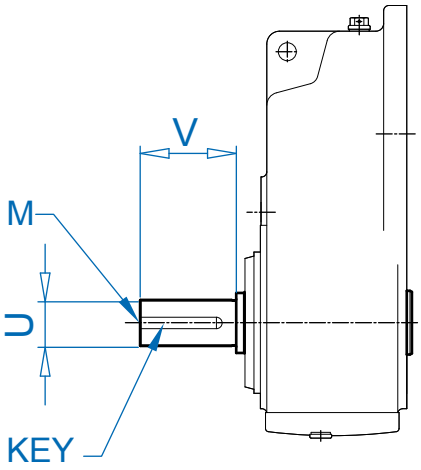

VZ

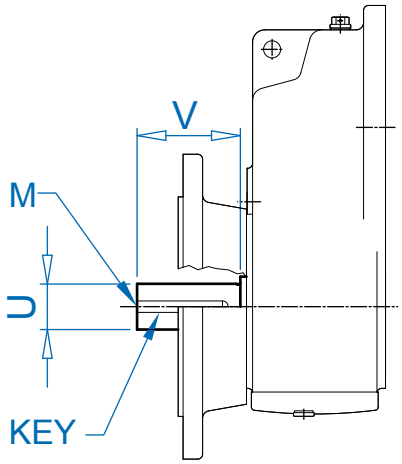

VF

UNIT	U	DIAMETER TOLERANCE	V	UY	KEY SIZE w x h x l	KEY QTY	DRILL & TAP M
SK 0182NB VZ/VF	0.750	+0.0000 / -0.0005	1.50	0.83	3/16 x 3/16 x 1-1/4	1	1/4-20
	25mm	+0.015 / +0.002mm	50mm	28.0mm	8 x 7 x 40mm	1	M10
SK 0282NB VZ/VF	1.000	+0.0000 / -0.0005	2.13	1.11	1/4 x 1/4 x 1-5/8	1	3/8-16
	25mm	+0.015 / +0.002mm	50mm	28.0mm	8 x 7 x 40mm	1	M10
SK 1382NB VZ/VF	1.250	+0.0000 / -0.0005	2.75	1.36	1/4 x 1/4 x 2-1/4	1	1/2-13
	30mm	+0.015 / +0.002mm	60mm	33.0mm	8 x 7 x 50mm	1	M10
SK 1282 VZ/VF	1.250	+0.0000 / -0.0005	2.75	1.36	1/4 x 1/4 x 2-1/4	1	1/2-13
SK 1382 VZ/VF	30mm	+0.015 / +0.002mm	60mm	33.0mm	8 x 7 x 50mm	1	M10
SK 2282 VZ/VF	1.375	+0.0000 / -0.0005	2.75	1.51	5/16 x 5/16 x 2-1/8	1	5/8-11
SK 2382 VZ/VF	35mm	+0.018 / +0.002mm	70mm	38.0mm	10 x 8 x 60mm	1	M12
SK 3282 VZ/VF	1.875	+0.0000 / -0.0010	3.50	2.09	1/2 x 1/2 x 2-3/4	1	5/8-11
SK 3382 VZ/VF	45mm	+0.018 / +0.002mm	90mm	48.5mm	14 x 9 x 80mm	1	M16
SK 4282 VZ/VF	2.250	+0.0000 / -0.0010	4.00	2.47	1/2 x 1/2 x 3-1/4	1	3/4-10
SK 4382 VZ/VF	55mm	+0.030 / +0.011mm	110mm	59.0mm	16 x 10 x 90mm	1	M20
SK 5282 VZ/VF	2.500	+0.0000 / -0.0010	5.00	2.77	5/8 x 5/8 x 4	1	3/4-10
SK 5382 VZ/VF	65mm	+0.030 / +0.011mm	130mm	69.0mm	18 x 11 x 100mm	1	M20
SK 6282 VZ/VF	3.000	+0.0000 / -0.0010	5.50	3.33	3/4 x 3/4 x 4-1/2	1	3/4-10
SK 6382 VZ/VF	75mm	+0.030 / +0.011mm	140mm	79.5mm	20 x 12 x 125mm	1	M20
SK 7282 VZ/VF	3.500	+0.0000 / -0.0010	6.75	3.88	7/8 x 7/8 x 5-1/2	1	3/4-10
SK 7382 VZ/VF	90mm	+0.035 / +0.013mm	170mm	95.0mm	25 x 14 x 140mm	1	M24
SK 8282 VZ/VF	4.250	+0.0000 / -0.0010	8.50	4.69	1 x 1 x 7-1/4	1	1-8
SK 8382 VZ/VF	110mm	+0.035 / +0.013mm	210mm	116mm	28 x 16 x 180mm	1	M24
SK 9282 VZ/VF	5.250	+0.0000 / -0.0010	9.84	5.80	1-1/4 x 1-1/4 x 8-3/8	1	1-8
SK 9382 VZ/VF	140mm	+0.040 / +0.015mm	250mm	148mm	36 x 20 x 200mm	1	M24
SK 10282 VZ/VF	6.250	+0.0000 / -0.0010	11.81	6.91	1-1/2 x 1-1/2 x 10	1	1-8
SK 10382 VZ/VF	160mm	+0.040 / +0.015mm	300mm	169mm	40 x 22 x 250mm	1	M24
SK 11282 VZ/VF	7.000	+0.0000 / -0.0010	11.81	7.77	1-3/4 x 1-3/4 x 10	1	1-8
SK 11382 VZ/VF	180mm	+0.040 / +0.015mm	300mm	190mm	45 x 25 x 250mm	1	M24
SK 12382 VZ/VF	7.000	+0.0000 / -0.0010	11.81	7.77	1-3/4 x 1-3/4 x 10	1	1-8
	180mm	+0.040 / +0.015mm	300mm	190mm	45 x 25 x 250mm	1	M24

- Dimensions are in inches unless otherwise noted.
- Metric Keys are captured in keyways.
- For shaft sizes not shown, consult NORD.

Send Quote Requests to info@automatedpt.com
Call +1(800)985-6929 To Order or Order Online At Nordgearmotors.com

DRIVESYSTEMS

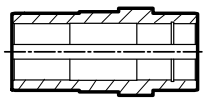

Hollow Shaft Dimensions

Hollow Shaft Dimensions (AZ-AF-AX)

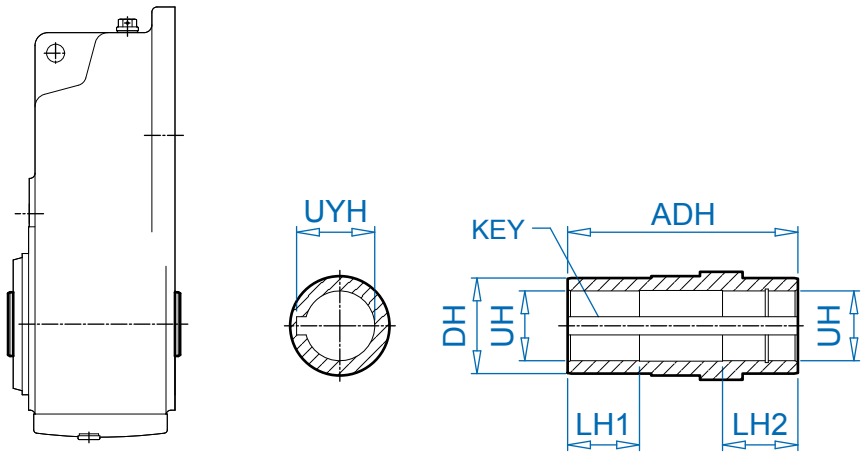

Type	UH	DIAMETER TOLERANCE	ADH	LH1	LH2	DH	UYH	KEY SIZE w x h x l	KEY QTY
SK 0182 NB AZ/AF/AX	0.750*	+0.0010 / -0.0000	3.94	1.18	1.18	1.38	0.84	3/16 x 3/16 x 1-1/2	2
	0.500	+0.0010 / -0.0000	3.94	1.18	1.18	1.38	0.56	1/8 x 1/8 x 1-1/2	2
	25mm	+0.021 / -0.000 mm	100mm	30mm	30mm	35mm	28.3 mm	8 x7 x 40mm	2
SK 0282NB AZ/AF/AX	1.000*	+0.0010 / -0.0000	4.80	1.57	1.57	1.57	1.11	1/4 x 1/4 x 2-1/8	2
	1.1875	+0.0010 / -0.0000	4.80	1.57	1.57	1.57	1.30	1/4 x 1/4 x 2	2
	0.750	+0.0010 / -0.0000	4.80	1.57	1.57	1.57	0.84	3/16 x 3/16 x 1-1/2	2
	25mm	+0.021 / -0.000 mm	122mm	40mm	40mm	40mm	28.3 mm	8 x 7 x 40mm	2
	30mm	+0.021 / -0.000 mm	122mm	40mm	40mm	40mm	33.3 mm	8 x 7 x 40mm	2
SK 1382NB AZ/AF/AX	1.375*	+0.0010 / -0.0000	6.93	1.69	3.15	1.97	1.52	5/16 x 5/16 x 2-1/2	2
	1.4375	+0.0010 / -0.0000	6.93	2.36	2.36	1.97	1.61	3/8 x 3/8 x 2-1/2	2
	1.250	+0.0010 / -0.0000	6.93	2.36	3.15	1.97	1.37	1/4 x 1/4 x 2-1/4	2
	35mm	+0.025 / -0.000 mm	176mm	60mm	80mm	50mm	38.3 mm	10 x 8 x 60mm	2
SK 1282 AZ/AF/AX	1.1875*	+0.0010 / -0.0000	4.80	1.57	1.57	1.77	1.31	1/4 x 1/4 x 1-5/8	2
	1.250	+0.0010 / -0.0000	4.80	1.57	1.57	1.77	1.37	1/4 x 1/4 x 1-5/8	2
	1.000	+0.0010 / -0.0000	4.80	1.57	1.57	1.77	1.11	1/4 x 1/4 x 1-5/8	2
	0.750	+0.0010 / -0.0000	4.80	1.57	1.57	1.77	0.84	3/16 x 3/16 x 1-1/2	2
	30mm	+0.021 / -0.000 mm	122mm	40mm	40mm	45mm	33.3 mm	8 x 7 x 40mm	2
SK 2282 AZ/AF/AX	1.4375*	+0.0010 / -0.0000	5.47	1.97	1.97	1.97	1.61	3/8 x 3/8 x 2	2
SK 2382 AZ/AF/AX	1.500	+0.0010 / -0.0000	5.47	1.97	1.97	1.97	1.61	3/8 x 1/4 x 2	2
	1.375	+0.0010 / -0.0000	5.47	1.97	1.97	1.97	1.52	5/16 x 5/16 x 2	2
	1.250	+0.0010 / -0.0000	5.47	1.97	1.97	1.97	1.37	1/4 x 1/4 x 2-1/8	2
	35mm	+0.025 / -0.000 mm	139mm	50mm	50mm	50mm	38.3 mm	10 x 8 x 42mm	2
SK 3282 AZ/AF/AX	1.625*	+0.0010 / -0.0000	6.85	2.28	2.28	2.17	1.73	3/8 x 1/4 x 2-1/4	2
SK 3382 AZ/AF/AX	1.500	+0.0010 / -0.0000	6.85	2.28	2.28	2.17	1.61	3/8 x 1/4 x 2-1/4	2
	1.4375	+0.0010 / -0.0000	6.85	2.28	2.28	2.17	1.61	3/8 x 3/8 x 2-1/2	2
	40mm	+0.025 / -0.000 mm	174mm	58mm	58mm	55mm	43.3 mm	12 x 8 x 50mm	2
SK 4282 AZ/AF/AX	2.0625*	+0.0012 / -0.0000	7.68	2.56	2.56	2.76	2.22	1/2 x 3/8 x 2-5/8	2
SK 4382 AZ/AF/AX	1.9375	+0.0012 / -0.0000	7.68	2.56	2.56	2.76	2.16	1/2 x 1/2 x 2-3/4	2
	2.000	+0.0012 / -0.0000	7.68	2.56	2.56	2.76	2.22	1/2 x 1/2 x 2-3/4	2
	1.6875	+0.0012 / -0.0000	7.68	2.56	2.56	2.76	1.86	3/8 x 3/8 x 2-1/2	2
	50mm	+0.025 / -0.000 mm	195mm	65mm	65mm	70mm	53.8 mm	14 x 9 x 63mm	2

* standard size

- Dimensions are in inches unless otherwise noted.
- For shaft sizes not shown, consult NORD.

Send Quote Requests to info@automatedpt.com
Call +1(800)985-6929 To Order or Order Online At Nordgearmotors.com

Send Quote Requests to info@automatedpt.com
Call +1(800)985-6929 To Order or Order Online At Nordgearmotors.com

Hollow Shaft Dimensions

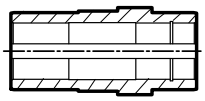

DRIVESYSTEMS

Hollow Shaft Dimensions (AZ-AF-AX)

DIMENSIONS — Dimensions in Inches

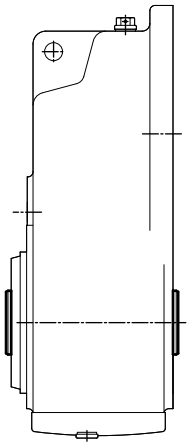

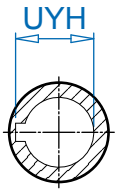

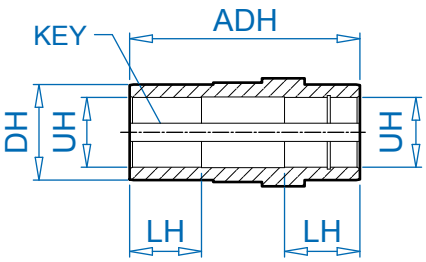

Type	UH	DIAMETER TOLERANCE	ADH	LH	DH	UYH	KEY SIZE w x h x l	KEY QTY
SK 5282 AZ/AF/AX	2.4375*	+0.0012 / -0.0000	9.06	2.95	3.35	2.71	5/8 x 5/8 x 3-1/2	2
SK 5382 AZ/AF/AX	2.375	+0.0012 / -0.0000	9.06	2.95	3.35	2.65	5/8 x 5/8 x 3-1/2	2
	2.1875	+0.0012 / -0.0000	9.06	2.95	3.35	2.41	1/2 x 1/2 x 3	2
	60mm	+0.030 / -0.000 mm	230mm	75mm	85mm	64.4 mm	18 x 11 x 70mm	2
SK 6282 AZ/AF/AX	2.750*	+0.0012 / -0.0000	11.42	3.54	3.94	3.03	5/8 x 5/8 x 4	2
SK 6382 AZ/AF/AX	2.9375	+0.0012 / -0.0000	11.42	3.54	3.94	3.14	3/4 x 1/2 x 4	2
	2.4375	+0.0012 / -0.0000	11.42	3.54	3.94	2.71	5/8 x 5/8 x 3-1/2	2
	70mm	+0.030 / -0.000 mm	290mm	120mm	100mm	74.9 mm	20 x 12 x 125mm	2
SK 7282 AZ/AF/AX	3.1875*	+0.0012 / -0.0000	12.20	3.54	4.33	3.40	3/4 x 1/2 x 4	2
SK 7382 AZ/AF/AX	3.250	+0.0012 / -0.0000	12.20	3.54	4.33	3.46	3/4 x 1/2 x 4	2
	2.9375	+0.0012 / -0.0000	12.20	3.54	4.33	3.14	3/4 x 1/2 x 4	2
	80mm	+0.030 / -0.000 mm	310mm	80mm	110mm	85.4 mm	22 x 14 x 128mm	2
SK 8282 AZ/AF/AX	4.0625*	+0.0014 / -0.0000	14.41	4.65	5.12	4.25	1 x 1/2 x 6	2
SK 8382 AZ/AF/AX	3.9375	+0.0014 / -0.0000	14.41	6.06	5.12	4.25	1 x 3/4 x 4-3/4	2
	4.000	+0.0014 / -0.0000	14.41	4.65	5.12	4.32	1 x 3/4 x 4-3/4	2
	3.4375	+0.0014 / -0.0000	14.41	6.06	5.12	3.82	7/8 x 7/8 x4-3/4	2
	100mm	+0.035 / -0.000 mm	366mm	154mm	130mm	106.4 mm	28 x 16 x 150mm	2
SK 9282 AZ/AF/AX	4.750*	+0.0014 / -0.0000	16.93	6.50	6.30	5.11	1-1/4 x 7/8 x 7	2
SK 9382 AZ/AF/AX	4.9375	+0.0014 / -0.0000	16.93	6.50	6.30	5.30	1-1/4 x 7/8 x 7	2
	4.4375	+0.0014 / -0.0000	16.93	7.32	6.30	4.89	1 x 1 x 7-1/4	2
	120mm	+0.035 / -0.000 mm	430mm	120mm	160mm	127.4mm	32 x 18 x 180mm	2

* standard size

- Dimensions are in inches unless otherwise noted.
- For shaft sizes not shown, consult NORD.

Send Quote Requests to info@automatedpt.com
Call +1(800)985-6929 To Order or Order Online At Nordgearmotors.com

Send Quote Requests to info@automatedpt.com
Call +1(800)985-6929 To Order or Order Online At Nordgearmotors.com

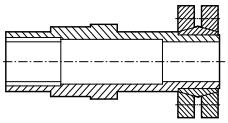

Shrink Disc Shaft Dimensions

Shrink Disc Shaft Dimensions (AZSH)

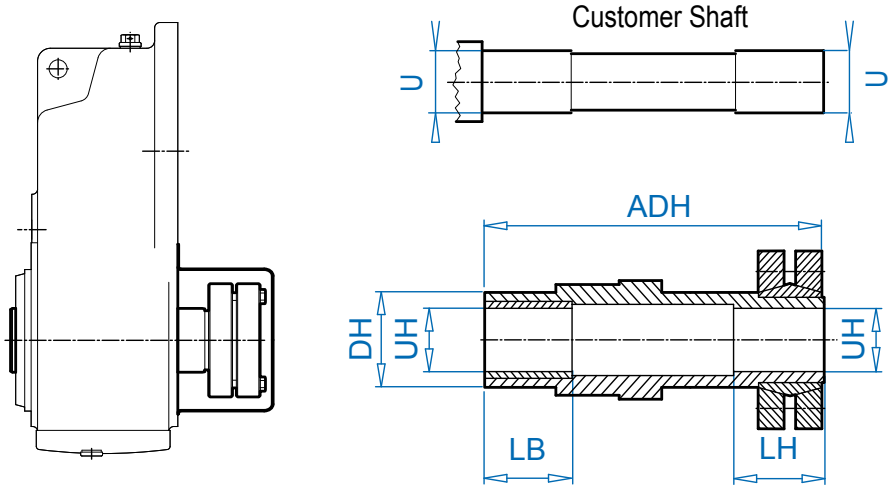

TYPE	HOLLOW SHAFT		ADH	LB	LH	DH	CUSTOMER SHAFT	
	UH	TOLERANCE					U	TOLERANCE
SK 0282NB AZSH	1.1875	+0.0009 / -0.0000	6.30	1.18	1.57	1.57	1.1875	+0.0000 / -0.0006
	30mm	+0.021 / -0.000mm	160mm	30mm	40mm	40mm	30mm	+0.000 / -0.013mm
SK 1382NB AZSH	1.500	+0.0009 / -0.0000	8.66	1.57	1.77	1.97	1.500	+0.0000 / -0.0006
	35mm	+0.025 / -0.000mm	220mm	40mm	45mm	50mm	35mm	+0.000 / -0.016mm
SK 1282 AZSH	1.250	+0.0009 / -0.0000	6.38	1.18	1.57	1.77	1.250	+0.0000 / -0.0006
	30mm	+0.021 / -0.000mm	162mm	31mm	40mm	45mm	30mm	+0.000 / -0.013mm
SK 2282 AZSH	1.500	+0.0009 / -0.0000	7.68	1.57	1.77	1.97	1.500	+0.0000 / -0.0006
	35mm	+0.025 / -0.000mm	195mm	41.5mm	45mm	50mm	35mm	+0.000 / -0.016mm
SK 3282 AZSH/	1.625	+0.0009 / -0.0000	8.86	1.61	2.17	2.17	1.625	+0.0000 / -0.0006
SK 3382 AZSH	40mm	+0.025 / -0.000mm	225mm	41mm	55mm	55mm	40mm	+0.000 / -0.016mm
SK 4282 AZSH	2.000	+0.0011 / -0.0000	10.28	2.01	2.17	2.76	2.000	+0.0000 / -0.0007
	50mm	+0.025 / -0.000mm	261mm	51mm	55mm	70mm	50mm	+0.000 / -0.016mm
SK 5282 AZSH	2.500	+0.0011 / -0.0000	11.61	2.17	2.76	3.35	2.500	+0.0000 / -0.0007
	60mm	+0.030 / -0.000mm	295mm	61mm	70mm	85mm	60mm	+0.000 / -0.019mm
SK 6282 AZSH/	3.000	+0.0011 / -0.0000	14.57	2.56	3.35	3.94	3.000	+0.0000 / -0.0007
SK 6382 AZSH	70mm	+0.030 / -0.000mm	370mm	71mm	85mm	100mm	70mm	+0.000 / -0.019mm
SK 7282 AZSH/	3.1875	+0.0013 / -0.0000	15.55	2.17	3.54	4.33	3.1875	+0.0000 / -0.0008
SK 7382 AZSH	80mm	+0.030 / -0.000mm	395mm	81mm	90mm	110mm	80mm	+0.000 / -0.019mm
SK 8282 AZSH/	4.000	+0.0013 / -0.0000	17.95	2.76	3.74	5.12	4.000	+0.0000 / -0.0008
SK 8382 AZSH	100mm	+0.035 / -0.000mm	456mm	71mm	95mm	130mm	100mm	+0.000 / -0.022mm
SK 9282 AZSH/	4.750	+0.0015 / -0.0000	21.06	3.23	4.33	6.30	4.750	+0.0000 / -0.0009
SK 9382 AZSH	125mm	+0.040 / -0.000mm	535mm	82mm	110mm	160mm	125mm	+0.000 / -0.022mm
SK 10282 AZSH/	6.250	+0.0015 / -0.0000	25.98	4.72	5.12	8.66	6.250	+0.0000 / -0.0009
SK 10382 AZSH	160mm	+0.040 / -0.000mm	660mm	122mm	130mm	220mm	160mm	+0.000 / -0.025mm
SK 11282 AZSH/	7.000	+0.0015 / -0.0000	26.57	4.00	4.33	9.45	7.000	+0.0000 / -0.0009
SK 11382 AZSH	180mm	+0.040 / -0.000mm	675mm	101.5mm	110mm	240mm	180mm	+0.000 / -0.025mm
SK 12382 AZSH	7.000	+0.0015 / -0.0000	33.27	4.00	10.59	9.45	7.000	+0.0000 / -0.0009
	180mm	+0.040 / -0.000mm	845mm	101.5mm	269mm	240mm	180mm	+0.000 / -0.025mm

Send Quote Requests to info@automatedpt.com
Call +1(800)985-6929 To Order or Order Online At Nordgearmotors.com

Send Quote Requests to info@automatedpt.com
Call +1(800)985-6929 To Order or Order Online At Nordgearmotors.com

Heavy Duty Shrink Disc Shaft Dimensions

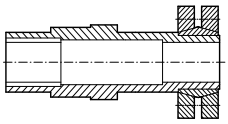

DRIVESYSTEMS

Heavy Duty Shrink Disc Shaft Dimensions (AZVSH)

DIMENSIONS
Dimensions in Inches

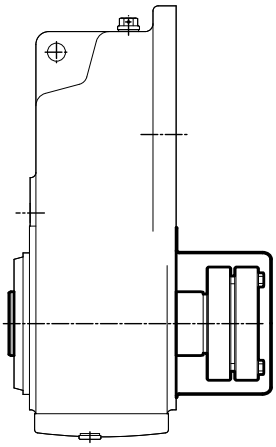

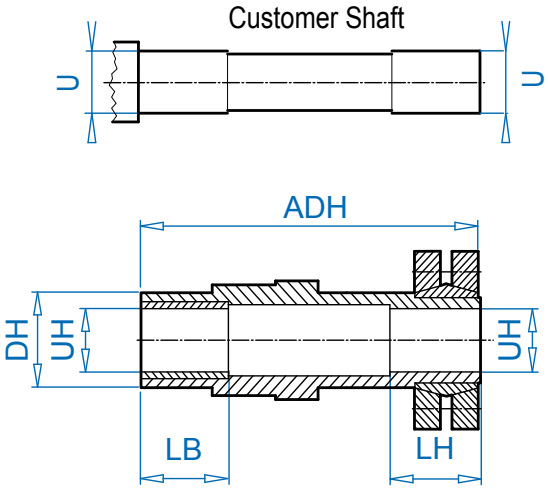

TYPE	HOLLOW SHAFT		ADH	LB	LH	DH	CUSTOMER SHAFT	
	UH	TOLERANCE					U	TOLERANCE
SK 7282 AZVSH	3.1875	+0.0013 / -0.0000	16.89	2.20	4.72	4.33	3.1875	+0.0000 / -0.0008
SK 7382 AZVSH	85mm	+0.035 / -0.000	429mm	56mm	120mm	110mm	85mm	+0.000 / -0.019mm
SK 8282 AZVSH	4.000	+0.0013 / -0.0000	20.08	2.76	5.87	5.12	4.000	+0.0000 / -0.0008
SK 8382 AZVSH	100mm	+0.035 / -0.000	510mm	71.5mm	149mm	130mm	100mm	+0.000 / -0.022mm
SK 9282 AZVSH	4.750	+0.0015 / -0.0000	23.90	3.23	7.17	6.30	4.750	+0.0000 / -0.0009
SK 9382 AZVSH	130mm	+0.040 / -0.000	607mm	82mm	182mm	160mm	130mm	+0.000 / -0.022mm
SK 10282 AZVSH	6.250	+0.0015 / -0.0000	25.98	4.72	5.12	8.66	6.25	+0.0000 / -0.0009
SK 10382 AZVSH	160mm	+0.040 / -0.000	660	122	130	220	160	+0.000 / -0.022mm
SK 11282 AZVSH	7.000	+0.0015 / -0.0000	29.72	4.00	7.68	9.45	7.000	+0.0000 / -0.0009
SK 11382 AZVSH	180mm	+0.040 / -0.000	755mm	101.5mm	195mm	240mm	180mm	+0.000 / -0.025mm

Send Quote Requests to info@automatedpt.com
Call +1(800)985-6929 To Order or Order Online At Nordgearmotors.com

Send Quote Requests to info@automatedpt.com Call +1(800)985-6929 To Order or Order Online At Nordgearmotors.com

Splined Hollow Shaft Dimensions (EA)

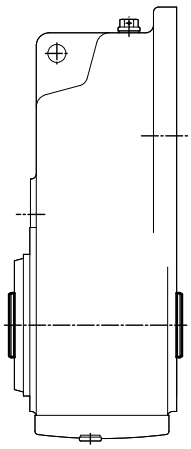

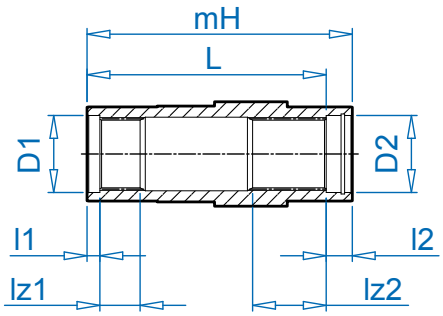

Type	HUB PROFILE DIN 5480 [mm]	l1 [mm]	l2 [mm]	lz1 [mm]	lz2 [mm]	mH [mm]	D1/D2 [mm]	L * [mm]
SK 1282 EA	N30 x 1.25 x 30 x 22 x 9H	5	22	33	33	122	35	100
SK 2282 EA	N35 x 2 x 30 x 16 x 9H	5	29	40	33	139	40	110
SK 3282 EA	N40 x 2 x 30 x 18 x 9H	8	34	41	50	174	45	140
SK 4282 EA	N50 x 2 x 30 x 24 x 9H	10	35	43	53	195	55	160
SK 5282 EA	N60 x 2 x 30 x 28 x 9H	15	45	43	65	230	65	185
SK 6282 EA	N70 x 2 x 30 x 34 x 9H	15	45	53	98.5	290	75	245
SK 7282 EA	N85 x 3 x 30 x 27 x 9H	15	60	47	86	310	90	250
SK 8282 EA	N105 x 3 x 30 x 34 x 9H	15	56	57	122	366	110	310
SK 9282 EA	N130 x 5 x 30 x 24 x 9H	15	60	67	147	430	135	370

Send Quote Requests to info@automatedpt.com
Call +1(800)985-6929 To Order or Order Online At Nordgearmotors.com

Fixing Element Kit



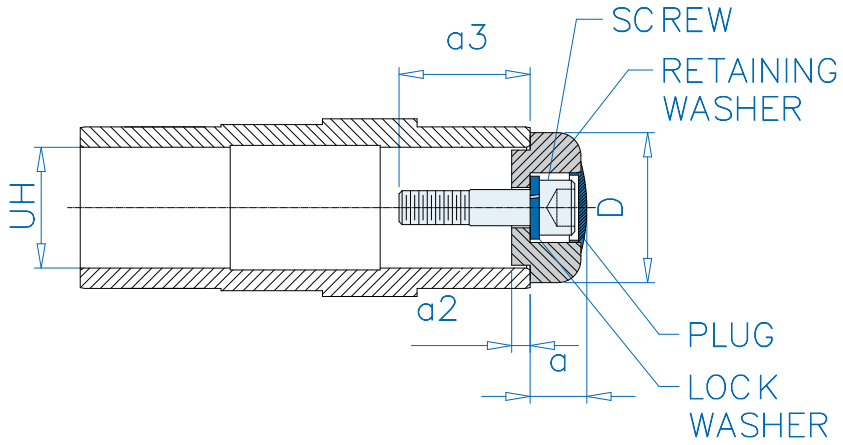

Inch Shaft Hollow Bore (in)

UH	D	a	a2	Screw ❶	a3 ❶	Screw ❷	a3 ❷	Screw ❸	a3 ❸
0.5000	0.984	0.565	0.110	10 - 32 x 5/8	0.499	-	-	-	-
0.7500	1.181	0.557	0.118	1/4 - 20 x 3/4	0.652	1/4 - 20 x 1	0.902	-	-
1.0000	1.496	0.767	0.150	3/8 - 16 x 3/4	0.624	3/8 - 16 x 1-1/4	1.124	-	-
1.1875	1.575	0.769	0.150	7/16 - 14 x 2-1/16	2.016	-	-	-	-
1.2500	1.575	0.769	0.150	7/16 - 14 x 2-1/16	2.016	-	-	-	-
1.3750	1.772	0.946	0.197	5/8 - 11 x 1-1/2	1.461	5/8 - 11 x 2-1/4	2.211	5/8 - 11 x 1	0.961
1.4375	1.772	0.946	0.197	5/8 - 11 x 1-1/2	1.461	5/8 - 11 x 2-1/4	2.211	5/8 - 11 x 1	0.961
1.5000	1.772	0.946	0.197	5/8 - 11 x 1-1/2	1.461	5/8 - 11 x 2-1/4	2.211	5/8 - 11 x 1	0.961
1.6250	2.165	0.927	0.315	5/8 - 11 x 2	2.000	5/8 - 11 x 1-1/2	1.500	-	-
1.6875	2.165	0.927	0.315	5/8 - 11 x 2	2.000	5/8 - 11 x 1-1/2	1.500	-	-
1.9375	2.362	0.966	0.315	5/8 - 11 x 2-1/4	2.000	-	-	-	-
2.0000	2.559	0.971	0.315	5/8 - 11 x 2-1/4	2.250	-	-	-	-
2.0625	2.559	0.971	0.315	5/8 - 11 x 2-1/4	2.250	-	-	-	-
2.1875	2.559	0.971	0.315	5/8 - 11 x 2-1/4	2.250	-	-	-	-
2.3750	2.953	1.129	0.354	3/4 - 10 x 2-1/2	2.500	-	-	-	-
2.4375	2.953	1.129	0.354	3/4 - 10 x 2-1/2	2.500	-	-	-	-
2.7500	3.740	1.132	0.354	3/4 - 10 x 2-1/2	2.500	-	-	-	-
2.9375	3.740	1.132	0.354	3/4 - 10 x 2-1/2	2.500	-	-	-	-
3.1875	3.740	1.132	0.354	3/4 - 10 x 2-1/2	2.500	-	-	-	-
3.2500	4.106	1.132	0.354	3/4 - 10 x 2-1/2	2.500	-	-	-	-
3.4375	4.106	1.132	0.354	3/4 - 10 x 2-1/2	2.500	-	-	-	-
3.9375	4.724	1.299	0.394	7/8 - 9 x 3-1/2	3.500	-	-	-	-
4.0000	4.724	1.299	0.394	7/8 - 9 x 3-1/2	3.500	-	-	-	-
4.0625	4.724	1.299	0.394	7/8 - 9 x 3-1/2	3.500	-	-	-	-
4.4375	5.315	1.299	0.386	7/8 - 9 x 3-1/2	3.500	-	-	-	-
4.7500	5.906	1.299	0.394	7/8 - 9 x 3-1/2	3.500	-	-	-	-
4.9375	5.906	1.299	0.394	7/8 - 9 x 3-1/2	3.500	-	-	-	-

Standard snap ring groove is machined into input (motor) side of hollow shaft.
Fixing element can be installed into opposite side but requires a special shaft. Consult NORD.

Metric Hollow Bore (mm)

UH	D	a	a2	Screw ❶	a3 ❶	Screw ❷	a3 ❷
25	38	19	3.8	M10 x 45	41.8	M10 x 30	26.8
30	40	19	3.8	M10 x 45	43.8	M10 x 30	28.8
35	45	23.5	5	M12 x 55	54	M12 x 35	34
40	55	23.7	8	M16 x 70	70	M16 x 45	45
50	65	24.7	8	M16 x 70	70	M16 x 45	45
60	75	29	9	M20 x 90	90	M20 x 55	55
70	95	29.3	9	M20 x 90	90	M20 x 55	55
80	102	29	9	M20 x 100	100	M20 x 55	55
100	120	34.5	10	M24 x 110	110	M24 x 65	65
120	150	34.5	10	M24 x 110	110	M24 x 65	65

❶, ❷, ❸ - Each fixing element kit may contain up to 3 different kinds of screws

Send Quote Requests to info@automatedpt.com
Call +1(800)985-6929 To Order or Order Online At Nordgearmotors.com

Send Quote Requests to info@automatedpt.com
Call +1(800)985-6929 To Order or Order Online At Nordgearmotors.com

Right-angle Helical-bevel Gearmotors

Selection

- Order Form
- Unit Examples
- 0.16 hp
- 0.25 hp
- 0.33 hp
- 0.50 hp
- 0.75 hp
- 1.0 hp
- 1.5 hp
- 2.0 hp
- 3.0 hp
- 5.0 hp
- 7.5 hp
- 10 hp
- 15 hp
- 20 hp
- 25 hp
- 30 hp
- 40 hp
- 50 hp
- 60 hp
- 75 hp
- 100 hp
- 125 hp
- 150 hp
- 175 hp
- 200 hp

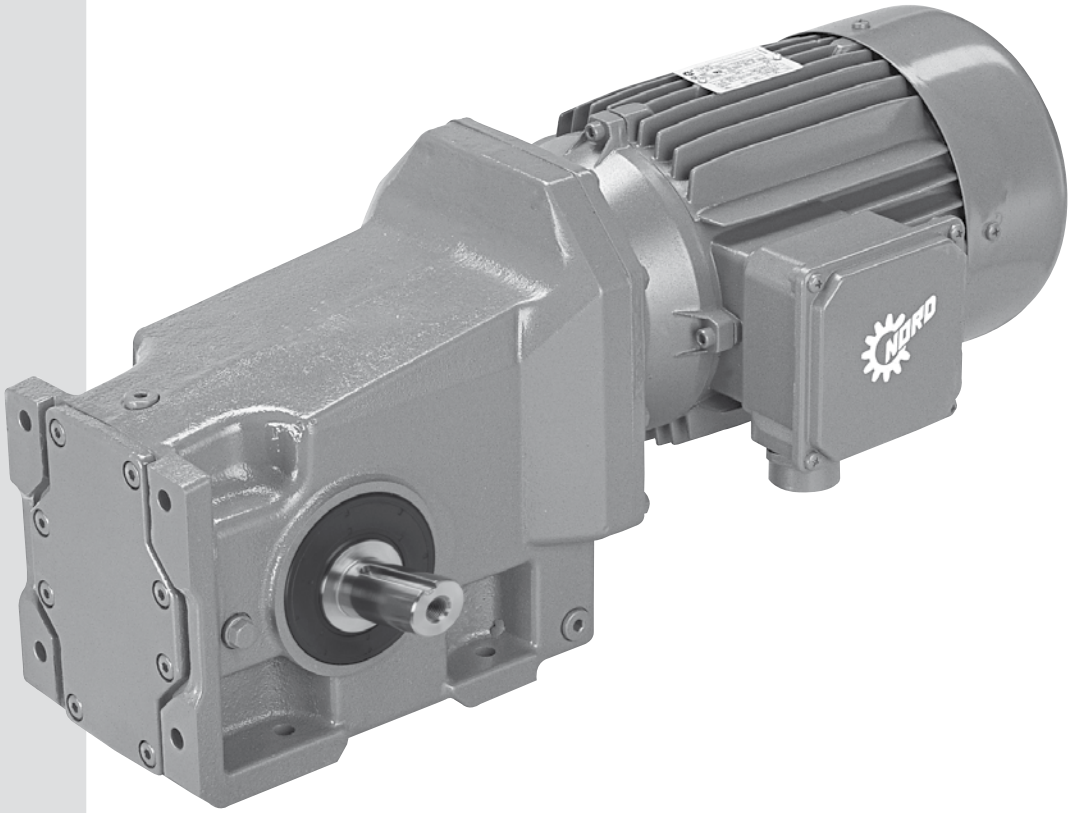

NORD® DRIVESYSTEMS

UNICASE™

www.nord.com

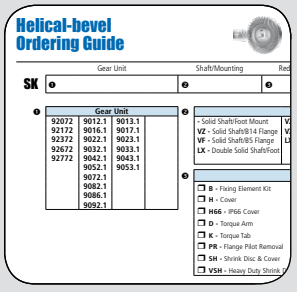

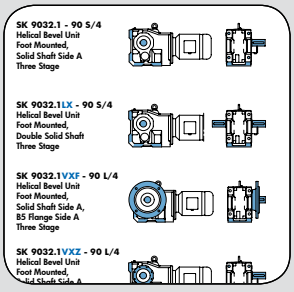

Motor Power P_n	Output Speed n_2	Output Torque T_a	Service Factor f_B	AGMA Class	Gear Ratio i_{tot}
[hp]	[rpm]	[lb-in]			
15	65	14614	2.8	III	27.35
	57	16714	2.5	III	31.28
	49	19348	2.2	III	36.21
	45	21223	2	III	39.72
	39	24023	1.8	II	44.96
	32	29153	1.5	II	54.56
	28	33352	1.3	I	62.42
	25	38599	1.1	I	72.24
	20	47111	0.9	*	88.17
	50	18803	3.3	III	35.19
	43	21966	3.1	III	41.11
	35	26903	2.7	III	50.35

Send Quote Requests to info@automatedpt.com
Call +1(800)985-6929 To Order or Order Online At Nordgearmotors.com

Helical-bevel Ordering Guide



DRIVESYSTEMS

	Gear Unit	Shaft/Mounting	Reducer Options		Motor/Input	Motor Options
SK	❶	❷	❸	-	❹	
					see page 690	see page 690

❶

Gear Unit			
92072	9012.1	9013.1	9072.1/32
92172	9016.1	9017.1	9072.1/42
92372	9022.1	9023.1	9082.1/42
92672	9032.1	9033.1	9082.1/52
92772	9042.1	9043.1	9086.1/52
	9052.1	9053.1	9092.1/52
	9072.1		9096.1/62
	9082.1		
	9086.1		
	9092.1		
	9096.1		

❷

Shaft/Mounting		
- Solid Shaft/Foot Mount	**VXZ -** Solid Shaft/Foot/B14 Flange	**AZ** - Hollow Shaft/B14 Flange
VZ - Solid Shaft/B14 Flange	**VXF -** Solid Shaft/Foot/B5 Flange	**AF** - Hollow Shaft/B5 Flange
VF - Solid Shaft/B5 Flange	**LXZ -** Double Solid Shaft/Foot/ B14 Flange	**AX** - Hollow Shaft/Foot Mount
LX - Double Solid Shaft/Foot		**AXZ -** Hollow Shaft/Footed/B14 Flange
		AXF - Hollow Shaft/Footed/B5 Flange

❸

Reducer Options		
❒ **B -** Fixing Element Kit	❒ **VL -** Heavy Duty Output Bearings	❒ **VI -** Flouro-rubber Seals
❒ **H -** Hollow Shaft Cover	❒ **VL2 -** Spread Bearing Design	❒ **OSG -** Oil Sight Glass
❒ **H66 -** IP66 Hollow Shaft Cover	❒ **VL3 -** Oil Safe Spread Bearings	❒ **OA -** Oil Expansion Chamber
❒ **D -** Torque Arm	❒ **VL4 -** Drywell	❒ **OC -** Oil Cooler
❒ **K -** Bottom Mount Torque Arm	❒ **SM5 -** Stainless Steel Shaft	❒ **WC -** Water Cooling Cover
❒ **PR -** Flange Pilot Removal	❒ **SWA -** Special Hollow Shaft	❒ **LL -** Long Term Storage
❒ **SH -** Shrink Disc & Cover	❒ **SWV -** Special Solid Shaft	❒ **MDP -** Magnetic Drain Plug
❒ **VSH -** Heavy Duty Shrink Disc & Cover	❒ **R -** Backstop	❒ **ADP -** Additional Drain Plug

❹

Input Shaft	NEMA Adapter	IEC Adapter	Integral Motors		Integral Energy Efficent Motors		Scoop	Motor Platform	Servo Adapter (Keyed)
W	N56C	IEC 63	**63S/4** - 0.16hp	**160L/4** - 20hp	**80LH/4** - 1hp	**200LH/4** - 40hp	S56	MKN056	SEP 100
	N140TC	IEC 71	**63L/4** - 0.25hp	**180MX/4** - 25hp	**90SH/4** - 1.5hp	**225SH/4** - 50hp	S140T	MKN140	SEP 130
	N180TC	IEC 80	**71S/4** - 0.33hp	**180LX/4** - 30hp	**90LH/4** - 2hp	**2525MH/4** - 60hp	S180T	MKN180	SEP 165
	N210TC	IEC 90	**71L/4** - 0.50hp	**200L/4** - 40hp	**100LH/4** - 3hp	**250MH/4** - 75hp	S210T	MKN210	SEP 215
	N250TC	IEC 100	**80S/4** - 0.75hp	**225S/4** - 50hp	**112MH/4** - 5hp	**280SH/4** - 100hp	S250T	MKN250	SEP 300
	N280TC	IEC 112	**80L/4** - 1hp	**2525M/4** - 60hp	**132SH/4** - 7.5hp	**280MH/4** - 125hp	S280T	MKN280	Servo Adapter (Clamp)
	N320TC	IEC 132	**90S/4** - 1.5hp	**250M/4** - 75hp	**132MH/4** - 10hp	**315SH/4** - 150hp	S320T	MKN320	
	N360TC	IEC 160	**90L/4** - 2hp	**280S/4** - 100hp	**160MH/4** - 15hp	**315MH/4** - 175hp	S360T	MKN360	SEK 100
	N400TC	IEC 180	**100L/4** - 3hp	**280M/4** - 125hp	**160LH/4** - 20hp	**315MAH/4** - 200hp	S400T	MKN400	SEK 130
		IEC 200	**100LA/4** - 5hp	**315S/4** - 150hp	**180MH/4** - 25hp	**315LH/4** - 250hp			SEK 165
		IEC 225	**112M/4** - 5.4hp	**315M/4** - 175hp	**180LH/4** - 30hp				SEK 215
		IEC 250	**132S/4** - 7.5hp	**315MA/4** - 200hp					SEK 300
		IEC 280	**132M/4** - 10hp	**315L/4** - 250hp					
		IEC 315	**160M/4** - 15hp	Other Speeds Available		Other Speeds Available			

Product Specifications

Ratio

_____ :1

see pages 398 - 446

OR

Output Speed

_____ rpm

see pages 398 - 446

Mounting Position

- ❍ M1
- ❍ M2
- ❍ M3
- ❍ M4
- ❍ M5
- ❍ M6
- ❍ Special _____

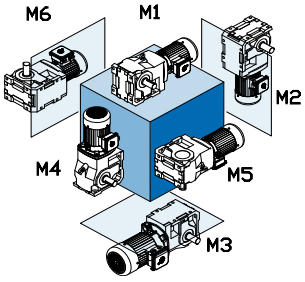

Paint

- ❍ Standard Stainles Steel Paint
- ❍ NSD+ (gray)
- ❍ NSD+W (white)
- ❍ NSD-X3 (gray)
- ❍ NSD-X3W (white)
- ❍ Casting Primed
- ❍ Special _____

Lubricant

- ❍ Standard
- ❍ Synthetic
- ❍ Food Grade
- ❍ Other _____

Solid Shaft Side (if required)

- ❍ Shaft Side A
- ❍ Shaft Side B
- ❍ Shaft Side A&B

see page 18

Hollow Shaft Diameter (if required)

_____

see pages 566 - 573

B5 Flange Side (if required)

- ❍ Flange Side A
- ❍ Flange Side B
- ❍ Flange Side A&B

see page 18

B5 Flange Diameter (if required)

_____

Torque Arm Side & Location (if required)

- ❍ Side A
- ❍ Side B

_____ Location

see page 18

Shrink Disc Side (if required)

- ❍ Side A
- ❍ Side B

see page 18

H66 Side (if required)

- ❍ H66 Side A
- ❍ H66 Side B

see page 18

Gearmotor Only Details

Voltage & Frequency

- ❍ 230/460V-60Hz (460V only ≥ 40 hp)
- ❍ 575V-60Hz
- ❍ 208V-60Hz
- ❍ 400V-50Hz
- ❍ 115/230V-60Hz, 1 ph.
- ❍ Other _____

Terminal Box Pos.

- ❍ TB1
- ❍ TB2
- ❍ TB3
- ❍ TB4

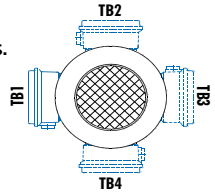

Mtg. Pos. M1 Shown

Conduit Entry Loc.

- ❍ CE I *
- ❍ CE II
- ❍ CE III *
- ❍ CE IV

* Brakemotor

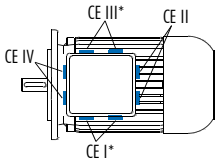

Mtg. Pos. M1 Shown

Send Quote Requests to info@automatedpt.com
Call +1(800)985-6929 To Order or Order Online At Nordgearmotors.com

DRIVESYSTEMS

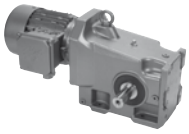

Unit Examples

Examples of Available Helical-bevel Units with Solid Shaft Design

SK 9032.1 - 90 S/4
Helical Bevel Unit
Foot Mounted,
Solid Shaft Side A
Three Stage

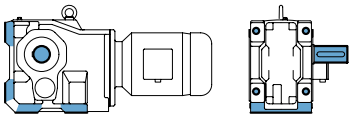

SK 9032.1LX - 90 S/4
Helical Bevel Unit
Foot Mounted,
Double Solid Shaft
Three Stage

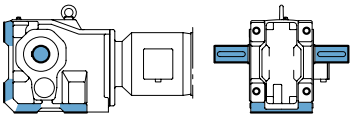

SK 9032.1VXF - 90 L/4
Helical Bevel Unit
Foot Mounted,
Solid Shaft Side A,
B5 Flange Side A
Three Stage

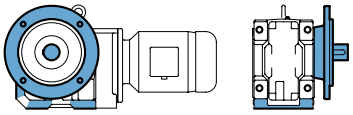

SK 9032.1VXZ - 90 L/4
Helical Bevel Unit
Foot Mounted,
Solid Shaft Side A
B14 Flange Side A & B
Three Stage

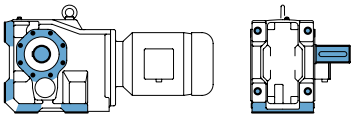

SK 9032.1VF - 90 L/4
Helical Bevel Unit
Solid Shaft Side A
B5 Flange Side A
Three Stage

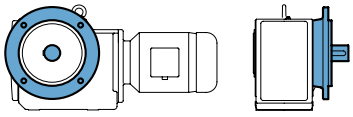

SK 9032.1VZ - 90 L/4
Helical Bevel Unit
Solid Shaft Side A
B14 Flange Side A & B
Three Stage

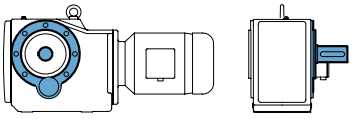

SK 9032.1LXZ - 90 L/4
Helical Bevel Unit
Double Solid Shaft
B14 Flange Side A & B
Three Stage

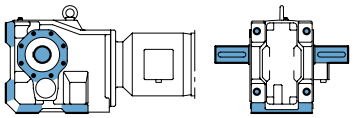

Examples of Available Helical-bevel Units with Hollow Shaft Design

SK 9032.1AZ - 90 S/4
Helical Bevel Unit
Hollow Shaft,
B14 Flange Side A & B
Three Stage

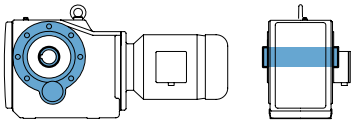

SK 9032.1AF - 90 S/4
Hollow Shaft,
B5 Flange Side A
Three Stage

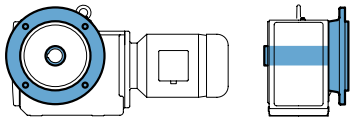

SK 9032.1AX - 90 L/4
Helical Bevel Unit
Hollow Shaft,
Foot Mounted
Three Stage

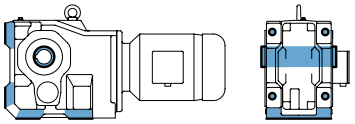

SK 9032.1AXZ - 90 L/4
Helical Bevel Unit
Hollow Shaft, Foot Mounted,
B14 Flange Side A & B
Three Stage

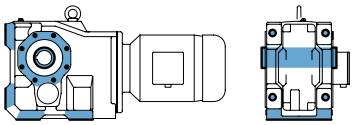

SK 9032.1AXF - 90 L/4
Helical Bevel Unit
Hollow Shaft, Foot Mounted,
B5 Flange Side A
Three Stage

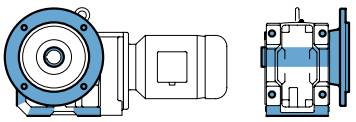

SK 9032.1AZSH - 90 L/4
Helical Bevel Unit
Hollow Shaft,
B14 Flange Side A & B,
Shrink Disc & Cover Side B
Three Stage

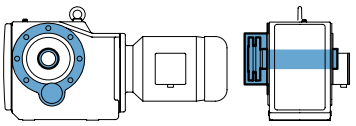

SK 9032.1AZD - 90 L/4
Helical Bevel Unit
Hollow Shaft,
B14 Flange Side A & B
Torque Arm Side A at 180°
Three Stage

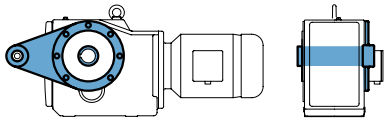

SK 9032.1AZK - 90 L/4
Helical Bevel Unit
Hollow Shaft,
B14 Flange Side A & B
Bottom Mount Torque Arm Side A
Three Stage

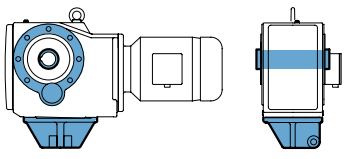

GEARMOTORS

Send Quote Requests to info@automatedpt.com
Call +1(800)985-6929 To Order or Order Online At Nordgearmotors.com

0.16 hp Gearmotors



DRIVESYSTEMS

Motor Power P_n [hp]	Output Speed n_2 [rpm]	Output Torque T_2 [lb-in]	Service Factor f_B	AGMA Class	Gear Ratio i_{tot}	Standard Bearings F_{RN} OHL [lb]	Standard Bearings F_{AN} Thrust [lb]	Heavy Duty Bearings (VL) F_{RVL} OHL [lb]	Heavy Duty Bearings (VL) F_{AVL} Thrust [lb]	Model Type	Weight [lb]	Dim. Page
0.16	442	23	18.9	III	3.85	610	864			SK 92072 - 63S/4	19	464
	324	31	16.8	III	5.24	673	979					
	294	35	18.8	III	5.79	695	1024					
	264	38	15.4	III	6.44	718	1069					
	216	47	16.8	III	7.87	738	1148					
	189	54	14.9	III	8.99	738	1148					
	176	58	13.8	III	9.68	738	1148					
	154	66	12.1	III	11.06	738	1148					
	125	81	8.2	III	13.55	738	1148					
	97	105	5.1	III	17.56	736	1148					
	83	122	6.6	III	20.37	736	1148					
	73	139	5.7	III	23.28	736	1148					
	64	157	5.1	III	26.39	734	1148					
	56	180	3.4	III	30.15	734	1148					
	49	207	3.2	III	34.73	731	1148					
	43	237	3.0	III	39.67	729	1148					
	36	285	1.4	II	47.83	725	1148					
	31	326	1.4	II	54.65	722	1148					
	415	24	21.3	III	4.1	729	1008			SK 92172 - 63S/4	30	468
	356	28	20.2	III	4.77	767	1071					
	319	32	19.7	III	5.33	767	1121					
	281	36	18.8	III	6.04	767	1184					
	241	42	20.0	III	7.04	767	1260					
	212	48	18.5	III	8.01	765	1260					
	187	54	17.2	III	9.07	765	1260					
	164	62	15.7	III	10.37	765	1260					
	144	70	14.4	III	11.81	765	1260					
	126	80	13.2	III	13.49	765	1260					
	109	93	11.4	III	15.61	765	1260					
	90	112	6.7	III	18.79	765	1260					
	60	168	6.3	III	28.24	763	1260					
	53	193	5.5	III	32.27	761	1260					
	47	215	4.1	III	36.11	758	1260					
	41	246	4.1	III	41.26	758	1260					
	36	280	2.4	III	46.9	754	1260					
	32	320	2.5	III	53.59	752	1260					
	27	378	1.2	I	63.29	745	1260					
	24	431	1.1	I	72.31	738	1260					
	50	202	8.1	III	33.8	1064	2025			SK 92372 - 63S/4	43	472
	44	230	7.3	III	38.62	1062	2025					
	39	260	5.1	III	43.52	1062	2025					
	34	297	5.1	III	49.73	1060	2025					
	31	328	3.0	III	55	1060	2025					
	27	375	3.0	III	62.85	1058	2025					

(AGMA Class I = f_B 1.0 - 1.39 II = f_B 1.4 - 1.99 III = f_B ≥ 2.0 * = f_B < 1.0)

Send Quote Requests to info@automatedpt.com
Call +1(800)985-6929 To Order or Order Online At Nordgearmotors.com

DRIVESYSTEMS

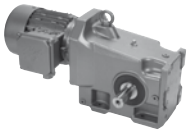



0.16 hp Gearmotors

Motor Power P_n [hp]	Output Speed n_2 [rpm]	Output Torque T_2 [lb-in]	Service Factor f_B	AGMA Class	Gear Ratio i_{tot}	Standard Bearings $F_{R\,N}$ OHL [lb]	Standard Bearings $F_{A\,N}$ Thrust [lb]	Heavy Duty Bearings (VL) $F_{R\,VL}$ OHL [lb]	Heavy Duty Bearings (VL) $F_{A\,VL}$ Thrust [lb]	Model Type	Weight [lb]	Dim. Page
0.16	210	48	26.1	III	8.09	1636	3224	2025	3224	**SK 9012.1 - 63S/4**	74	484
	184	55	25.3	III	9.23	1636	3350	2025	3350			
	157	65	24.4	III	10.85	1636	3515	2025	3515			
	139	73	23.5	III	12.23	1636	3641	2025	3641			
	111	91	26.1	III	15.3	1636	3902	2025	3902			
	97	104	25.3	III	17.45	1636	4055	2025	4055			
	81	125	25.3	III	20.87	1636	4275	2025	4275			
	69	146	24.2	III	24.53	1636	4478	2025	4478			
	61	165	21.5	III	27.65	1636	4500	2025	4500			
	54	188	18.9	III	31.45	1636	4500	2025	4500			
	49	208	17.0	III	34.81	1636	4500	2025	4500			
	41	248	14.2	III	41.65	1636	4500	2025	4500			
	35	292	12.1	III	48.95	1634	4500	2025	4500			
	31	329	10.8	III	55.17	1634	4500	2025	4500			
	27	374	9.5	III	62.74	1631	4500	2025	4500			
	22	457	7.8	III	76.53	1629	4500	2025	4500			
	20	513	6.9	III	86	1629	4500	2025	4500			
	17	581	6.1	III	97.36	1627	4500	2025	4500			
	14	737	4.8	III	123.48	1618	4500	2025	4500			
	12	839	4.2	III	140.7	1613	4500	2025	4500			
	10	994	3.6	III	166.59	1604	4500	2025	4500			
	8.3	1229	2.9	III	205.93	1586	4500	2025	4500			
	6.9	1470	2.4	III	246.37	1564	4500	2025	4500			
	6.1	1675	2.1	III	280.71	1541	4500	2025	4500			
	5.1	1983	1.8	II	332.37	1501	4500	2025	4500			
	5.3	1913	1.9	II	320.6	1510	4500	2025	4500	**SK 9013.1 - 63S/4**	85	488
	3.9	2622	1.4	II	439.46	1388	4500	2025	4500			
	2.9	3520	1.0	I	589.96	1152	4500	1942	4500			
	2.5	3985	0.9	*	667.89	974	4500	1843	4500			
	2	4425	0.8	*	847.07	738	4500	1728	4500			
	1.4	4425	0.8	*	1256.07	738	4500	1728	4500			
	1.2	4425	0.8	*	1412.68	738	4500	1728	4500			
	1	4425	0.8	*	1690.1	738	4500	1728	4500			
	4.6	2191	2.5	III	367.33	2025	4500	2025	4500	**SK 9017.1 - 63S/4**	87	496
	3.4	2942	1.8	II	493.12	2025	4500	2025	4500			
	3	3330	1.6	II	558.25	2025	4500	2025	4500			
	2.7	3756	1.4	II	629.56	1967	4500	2025	4500			
	1.4	6748	0.8	*	1256.07	1161	4500	2025	4500			
	1.2	6748	0.8	*	1412.69	1161	4500	2025	4500			
	3.6	2818	2.7	III	472.43	1976	2700	2700	5625	**SK 9023.1 - 63S/4**	103	504
	3	3350	2.3	III	561.55	1910	2700	2700	5625			
	2.5	4047	1.9	II	678.31	1805	2700	2700	5625			
	2.3	4497	1.7	II	753.86	1721	2700	2651	5625			
	1.8	5679	1.3	I	951.94	1429	2700	2471	5625			
	1.5	6684	1.1	I	1120.38	1044	2700	2270	5625			
	1.1	9514	0.8	*	1504.07	-	2700	1280	5625			

(AGMA Class I = f_B 1.0 - 1.39 II = f_B 1.4 - 1.99 III = f_B ≥ 2.0 * = f_B < 1.0)

Send Quote Requests to info@automatedpt.com
Call +1(800)985-6929 To Order or Order Online At Nordgearmotors.com

0.16, 0.25 hp Gearmotors



DRIVESYSTEMS

Motor Power	Output Speed	Output Torque	Service Factor	AGMA Class	Gear Ratio	Standard Bearings		Heavy Duty Bearings (VL)		Model Type	Weight	Dim. Page
P_n	n_2	T_2	f_B		i_{tot}	F_{RN} OHL	F_{AN} Thrust	F_{RVL} OHL	F_{AVL} Thrust		lb	
[hp]	[rpm]	[lb-in]				[lb]	[lb]	[lb]	[lb]		[lb]	
0.16	3.2	3216	4.3	III	539.1	3362	3263	3375	6417	**SK 9033.1 - 63S/4**	153	512
	2.5	4126	3.3	III	691.55	3317	3263	3375	6750			
	1.9	5212	2.6	III	873.65	3245	3263	3375	6750			
	1.5	6860	2.0	III	1149.8	3098	3263	3375	6750			
	1.2	8122	1.7	II	1361.37	2954	3263	3375	6750			
0.25	436	36	12.0	III	3.85	608	855			**SK 92072 - 63L/4**	20	464
	321	50	10.5	III	5.24	668	968					
	290	55	11.8	III	5.79	691	1015					
	261	62	9.6	III	6.44	716	1053					
	213	75	10.5	III	7.87	738	1148					
	187	86	9.3	III	8.99	738	1148					
	174	93	8.6	III	9.68	738	1148					
	152	106	7.5	III	11.06	736	1148					
	124	130	5.1	III	13.55	736	1148					
	96	168	3.2	III	17.56	734	1148					
	82	195	4.1	III	20.37	734	1148					
	72	223	3.6	III	23.28	731	1148					
	64	252	3.2	III	26.39	729	1148					
	56	288	2.1	III	30.15	725	1148					
	48	332	2.0	III	34.73	720	1148					
	42	379	1.9	II	39.67	716	1148					
	410	39	13.3	III	4.1	729	1001			**SK 92172 - 63L/4**	31	468
	352	46	12.6	III	4.77	763	1064					
	315	51	12.3	III	5.33	765	1116					
	278	58	11.8	III	6.04	765	1175					
	239	67	12.5	III	7.04	765	1253					
	210	77	11.6	III	8.01	765	1260					
	185	87	10.7	III	9.07	765	1260					
	162	99	9.8	III	10.37	765	1260					
	142	113	9.0	III	11.81	765	1260					
	125	129	8.2	III	13.49	765	1260					
	108	149	7.1	III	15.61	763	1260					
	89	180	4.2	III	18.79	761	1260					
	59	270	3.9	III	28.24	756	1260					
	52	308	3.4	III	32.27	752	1260					
	47	345	2.6	III	36.11	747	1260					
	41	394	2.6	III	41.26	743	1260					
	36	448	1.5	II	46.9	736	1260					
	31	512	1.6	II	53.59	725	1260					
	50	323	5.1	III	33.8	1060	2025			**SK 92372 - 63L/4**	45	472
	44	369	4.6	III	38.62	1058	2025					
	39	416	3.2	III	43.52	1055	2025					
	34	475	3.2	III	49.73	1051	2025					
	31	526	1.9	II	55	1049	2025					
	27	601	1.8	II	62.85	1042	2025					

(AGMA Class I = f_B 1.0 - 1.39 II = f_B 1.4 - 1.99 III = f_B ≥ 2.0 * = f_B < 1.0)

Send Quote Requests to info@automatedpt.com
Call +1(800)985-6929 To Order or Order Online At Nordgearmotors.com

NORD DRIVESYSTEMS

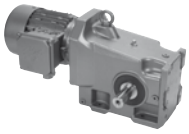



0.25 hp Gearmotors

Motor Power P_n [hp]	Output Speed n_2 [rpm]	Output Torque T_2 [lb-in]	Service Factor f_B	AGMA Class	Gear Ratio i_{tot}	Standard Bearings $F_{R\,N}$ OHL [lb]	Standard Bearings $F_{A\,N}$ Thrust [lb]	Heavy Duty Bearings (VL) $F_{R\,VL}$ OHL [lb]	Heavy Duty Bearings (VL) $F_{A\,VL}$ Thrust [lb]	Model Type	Weight [lb]	Dim. Page
0.25	32	496	6.2	III	51.86	1386	2700			**SK 92672 - 63L/4**	81	476
	28	566	5.9	III	59.25	1384	2700					
	208	77	16.3	III	8.09	1636	3229	2025	3229	**SK 9012.1 - 63L/4**	75	484
	182	88	15.8	III	9.23	1636	3355	2025	3355			
	155	104	15.2	III	10.85	1636	3521	2025	3521			
	137	117	14.7	III	12.23	1636	3641	2025	3641			
	110	146	16.3	III	15.3	1636	3902	2025	3902			
	96	167	15.8	III	17.45	1636	4048	2025	4048			
	80	199	15.8	III	20.87	1636	4275	2025	4275			
	68	234	15.1	III	24.53	1636	4471	2025	4471			
	61	264	13.4	III	27.65	1634	4500	2025	4500			
	53	301	11.8	III	31.45	1634	4500	2025	4500			
	48	333	10.6	III	34.81	1634	4500	2025	4500			
	40	398	8.9	III	41.65	1631	4500	2025	4500			
	34	468	7.6	III	48.95	1629	4500	2025	4500			
	30	527	6.7	III	55.17	1627	4500	2025	4500			
	27	600	5.9	III	62.74	1625	4500	2025	4500			
	22	732	4.8	III	76.53	1620	4500	2025	4500			
	20	822	4.3	III	86	1613	4500	2025	4500			
	17	931	3.8	III	97.36	1609	4500	2025	4500			
	14	1180	3.0	III	123.48	1591	4500	2025	4500			
	12	1345	2.6	III	140.7	1575	4500	2025	4500			
	10	1592	2.2	III	166.59	1550	4500	2025	4500			
	8.2	1968	1.8	II	205.93	1503	4500	2025	4500			
	6.8	2355	1.5	II	246.37	1440	4500	2025	4500			
	6	2683	1.3	I	280.71	1377	4500	2025	4500			
	5.1	3177	1.1	I	332.37	1258	4500	2005	4500			
	5.2	3064	1.2	I	320.6	1287	4500	2025	4500	**SK 9013.1 - 63L/4**	86	488
	3.8	4201	0.8	*	439.46	871	4500	1789	4500			
	8.2	1968	2.7	III	205.93	2025	4500	2025	4500	**SK 9016.1 - 63L/4**	78	492
	7.2	2243	2.3	III	234.64	2025	4500	2025	4500			
	6	2656	2.0	III	277.84	2025	4500	2025	4500			
	4.6	3511	1.5	II	367.33	2003	4500	2025	4500	**SK 9017.1 - 63L/4**	89	496
	3.4	4714	1.1	I	493.12	1793	4500	2025	4500			
	3	5336	1.0	I	558.25	1647	4500	2025	4500			
	2.7	6018	0.9	*	629.56	1447	4500	2025	4500			
	7.2	2226	2.8	III	232.92	2032	2700	2700	4923	**SK 9022.1 - 63L/4**	93	500
	6.1	2646	2.7	III	276.86	1994	2700	2700	5141			
	7.4	2184	2.6	III	228.47	2036	2700	2700	4898	**SK 9023.1 - 63L/4**	104	504
	5.6	2845	2.7	III	297.67	1973	2700	2700	5231			
	4.9	3244	2.3	III	339.41	1924	2700	2700	5402			

(AGMA Class I = f_B 1.0 - 1.39 II = f_B 1.4 - 1.99 III = f_B ≥ 2.0 * = f_B < 1.0)

Send Quote Requests to info@automatedpt.com
Call +1(800)985-6929 To Order or Order Online At Nordgearmotors.com

0.25, 0.33 hp Gearmotors



DRIVESYSTEMS

Motor Power	Output Speed	Output Torque	Service Factor	AGMA Class	Gear Ratio	Standard Bearings		Heavy Duty Bearings (VL)		Model Type	Weight	Dim. Page
P_n	n_2	T_2	f_B		i_{tot}	F_{RN} OHL	F_{AN} Thrust	F_{RVL} OHL	F_{AVL} Thrust		lb	
[hp]	[rpm]	[lb-in]				[lb]	[lb]	[lb]	[lb]		[lb]	
0.25	3.6	4516	1.7	II	472.43	1717	2700	2648	5625	**SK 9023.1 - 63L/4**	104	504
	3	5368	1.4	II	561.55	1519	2700	2522	5625			
	2.5	6484	1.2	I	678.31	1136	2700	2313	5625			
	2.2	7206	1.1	I	753.86	731	2700	2144	5625			
	1.8	9099	0.8	*	951.94	-	2700	1494	5625			
	4.8	3367	4.1	III	352.25	3355	3263	3375	5607	**SK 9033.1 - 63L/4**	155	512
	4.2	3812	3.6	III	398.77	3332	3263	3375	5783			
	3.1	5153	2.7	III	539.1	3249	3263	3375	6215			
	2.4	6610	2.1	III	691.55	3123	3263	3375	6584			
	1.9	8351	1.6	II	873.65	2925	3263	3375	6750			
	1.5	10990	1.2	I	1149.8	2486	3263	3375	6750			
	1.2	13013	1.1	I	1361.37	1985	3263	3375	6750			
	0.92	17416	0.8	*	1822	-	3263	2887	6750			
0.33	444	47	9.2	III	3.85	601	839			**SK 92072 - 71S/4**	23	464
	326	65	8.1	III	5.24	662	950					
	295	72	9.1	III	5.79	682	990					
	266	80	7.4	III	6.44	707	1031					
	217	97	8.1	III	7.87	738	1118					
	190	111	7.2	III	8.99	736	1148					
	177	120	6.7	III	9.68	736	1148					
	155	137	5.8	III	11.06	736	1148					
	126	167	4.0	III	13.55	734	1148					
	97	217	2.4	III	17.56	731	1148					
	84	252	3.2	III	20.37	729	1148					
	73	288	2.8	III	23.28	725	1148					
	65	326	2.4	III	26.39	722	1148					
	57	373	1.7	II	30.15	716	1148					
	49	429	1.5	II	34.73	709	1148					
	43	490	1.4	II	39.67	700	1148					
	417	51	10.3	III	4.1	720	986			**SK 92172 - 71S/4**	34	468
	358	59	9.7	III	4.77	756	1049					
	321	66	9.5	III	5.33	765	1098					
	283	75	9.1	III	6.04	765	1157					
	243	87	9.7	III	7.04	765	1235					
	213	99	8.9	III	8.01	765	1260					
	189	112	8.3	III	9.07	765	1260					
	165	128	7.6	III	10.37	765	1260					
	145	146	7.0	III	11.81	763	1260					
	127	167	6.4	III	13.49	763	1260					
	110	193	5.5	III	15.61	761	1260					
	91	232	3.2	III	18.79	758	1260					
	61	349	3.0	III	28.24	747	1260					
	53	399	2.7	III	32.27	743	1260					
	47	446	2.0	III	36.11	736	1260					

(AGMA Class I = f_B 1.0 - 1.39 II = f_B 1.4 - 1.99 III = f_B ≥ 2.0 * = f_B < 1.0)

Send Quote Requests to info@automatedpt.com
Call +1(800)985-6929 To Order or Order Online At Nordgearmotors.com

DRIVESYSTEMS

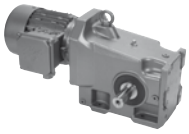



0.33 hp Gearmotors

Motor Power P_n [hp]	Output Speed n_2 [rpm]	Output Torque T_2 [lb-in]	Service Factor f_B	AGMA Class	Gear Ratio i_{tot}	Standard Bearings $F_{R\,N}$ OHL [lb]	Standard Bearings $F_{A\,N}$ Thrust [lb]	Heavy Duty Bearings (VL) $F_{R\,VL}$ OHL [lb]	Heavy Duty Bearings (VL) $F_{A\,VL}$ Thrust [lb]	Model Type	Weight [lb]	Dim. Page
0.33	41	510	2	III	41.26	727	1260			**SK 92172 - 71S/4**	34	468
	36	580	1.1	I	46.9	713	1260					
	32	662	1.2	I	53.59	695	1260					
	51	418	3.9	III	33.8	1055	2025			**SK 92372 - 71S/4**	47	472
	44	477	3.5	III	38.62	1051	2025					
	39	538	2.5	III	43.52	1046	2025					
	34	614	2.4	III	49.73	1042	2025					
	31	680	1.4	II	55	1035	2025					
	27	777	1.4	II	62.85	1026	2025					
	33	641	4.8	III	51.86	1379	2700			**SK 92672 - 71S/4**	84	476
	29	732	4.5	III	59.25	1375	2700					
	211	100	12.6	III	8.09	1636	3202	2025	3202	**SK 9012.1 - 71S/4**	78	484
	185	114	12.2	III	9.23	1636	3328	2025	3328			
	158	134	11.8	III	10.85	1636	3492	2025	3492			
	140	151	11.4	III	12.23	1636	3611	2025	3611			
	112	189	12.6	III	15.3	1636	3863	2025	3863			
	98	216	12.2	III	17.45	1636	4021	2025	4021			
	82	258	12.2	III	20.87	1636	4235	2025	4235			
	70	303	11.7	III	24.53	1634	4435	2025	4435			
	62	342	10.4	III	27.65	1634	4500	2025	4500			
	54	389	9.1	III	31.45	1631	4500	2025	4500			
	49	430	8.2	III	34.81	1631	4500	2025	4500			
	41	515	6.9	III	41.65	1629	4500	2025	4500			
	35	605	5.9	III	48.95	1625	4500	2025	4500			
	31	682	5.2	III	55.17	1622	4500	2025	4500			
	27	775	4.6	III	62.74	1618	4500	2025	4500			
	22	946	3.7	III	76.53	1607	4500	2025	4500			
	20	1063	3.3	III	86	1600	4500	2025	4500			
	18	1203	2.9	III	97.36	1589	4500	2025	4500			
	14	1526	2.3	III	123.48	1557	4500	2025	4500			
	12	1739	2.0	III	140.7	1532	4500	2025	4500			
	10	2058	1.7	II	166.59	1490	4500	2025	4500			
	8.3	2545	1.4	II	205.93	1404	4500	2025	4500			
	6.9	3044	1.2	I	246.37	1292	4500	2025	4500			
	6.1	3469	1.0	I	280.71	1170	4500	1953	4500			
	5.1	4107	0.9	*	332.37	918	4500	1811	4500			
	8.3	2545	2.1	III	205.93	2025	4500	2025	4500	**SK 9016.1 - 71S/4**	80	492
	7.3	2899	1.8	II	234.64	2025	4500	2025	4500			
	6.2	3433	1.5	II	277.84	2014	4500	2025	4500			

(AGMA Class I = f_B 1.0 - 1.39 II = f_B 1.4 - 1.99 III = f_B ≥ 2.0 * = f_B < 1.0)

Send Quote Requests to info@automatedpt.com
Call +1(800)985-6929 To Order or Order Online At Nordgearmotors.com

0.33, 0.5 hp Gearmotors



DRIVESYSTEMS

Motor Power P_n [hp]	Output Speed n_2 [rpm]	Output Torque T_2 [lb-in]	Service Factor f_B	AGMA Class	Gear Ratio i_{tot}	Standard Bearings F_{RN} OHL [lb]	Standard Bearings F_{AN} Thrust [lb]	Heavy Duty Bearings (VL) F_{RVL} OHL [lb]	Heavy Duty Bearings (VL) F_{AVL} Thrust [lb]	Model Type	Weight [lb]	Dim. Page
0.33	4.7	4539	1.2	I	367.33	1829	4500	2025	4500	**SK 9017.1 - 71S/4**	91	496
	3.5	6093	0.9	*	493.12	1422	4500	2025	4500			
	3.1	6898	0.8	*	558.25	1089	4500	2025	4500			
	7.3	2878	2.2	III	232.92	1969	2700	2700	4790	**SK 9022.1 - 71S/4**	96	500
	6.2	3421	2.1	III	276.86	1901	2700	2700	5002			
	3.6	5838	1.3	I	472.43	1379	2700	2441	5596	**SK 9023.1 - 71S/4**	107	504
	3	6939	1.1	I	561.55	909	2700	2210	5625			
	2.5	8381	0.9	*	678.31		2700	1787	5625			
	2.3	9315	0.8	*	753.86		2700	1388	5625			
	6.8	3086	4.4	III	249.72	3368	3263	3375	5013	**SK 9032.1 - 71S/4**	140	508
	5.8	3656	3.8	III	295.85	3341	3263	3375	5234			
	4.3	4927	2.8	III	398.77	3265	3263	3375	5625	**SK 9033.1 - 71S/4**	157	512
	3.2	6661	2.1	III	539.1	3119	3263	3375	6008			
	2.5	8545	1.6	II	691.55	2898	3263	3375	6325			
	2	10795	1.3	I	873.65	2527	3263	3375	6604			
	1.5	14207	1.0	I	1149.8	1559	3263	3375	6750			
	1.3	16822	0.8	*	1361.37		3263	3047	6750			
	3	7019	3.5	III	568.04	6246	9000	6300	9000	**SK 9043.1 - 71S/4**	277	520
	2.7	7972	3.1	III	645.18	6215	9000	6300	9000			
	1.9	10893	2.3	III	881.6	6093	9000	6300	9000			
	1.5	13756	1.8	II	1113.24	5933	9000	6300	9000			
	1.1	18747	1.3	I	1517.17	5549	9000	6300	9000			
0.5	447	71	6.1	III	3.85	592	819			**SK 92072 - 71L/4**	25	464
	328	95	5.5	III	5.24	653	920					
	297	105	6.2	III	5.79	673	961					
	267	117	5.0	III	6.44	693	995					
	219	143	5.5	III	7.87	736	1078					
	191	163	4.9	III	8.99	734	1136					
	178	176	4.5	III	9.68	734	1148					
	156	201	4.0	III	11.06	731	1148					
	127	246	2.7	III	13.55	729	1148					
	98	319	1.7	II	17.56	722	1148					
	84	370	2.2	III	20.37	716	1148					
	74	423	1.9	II	23.28	709	1148					
	65	480	1.7	II	26.39	702	1148					
	57	548	1.1	I	30.15	689	1148					
	50	631	1.1	I	34.73	673	1148					
	43	721	1.0	I	39.67	650	1148					

(AGMA Class I = f_B 1.0 - 1.39 II = f_B 1.4 - 1.99 III = f_B ≥ 2.0 * = f_B < 1.0)

Send Quote Requests to info@automatedpt.com
Call +1(800)985-6929 To Order or Order Online At Nordgearmotors.com

DRIVESYSTEMS

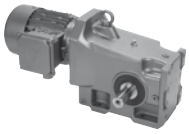



0.5 hp Gearmotors

Motor Power P_n [hp]	Output Speed n_2 [rpm]	Output Torque T_2 [lb-in]	Service Factor f_B	AGMA Class	Gear Ratio i_{tot}	Standard Bearings $F_{R\,N}$ OHL [lb]	Standard Bearings $F_{A\,N}$ Thrust [lb]	Heavy Duty Bearings (VL) $F_{R\,VL}$ OHL [lb]	Heavy Duty Bearings (VL) $F_{A\,VL}$ Thrust [lb]	Model Type	Weight [lb]	Dim. Page
0.5	420	75	7.0	III	4.1	713	970			SK 92172 - 71L/4	36	468
	361	87	6.6	III	4.77	752	1031					
	323	97	6.5	III	5.33	765	1076					
	285	110	6.2	III	6.04	765	1132					
	244	128	6.6	III	7.04	765	1202					
	215	146	6.1	III	8.01	763	1260					
	190	165	5.6	III	9.07	763	1260					
	166	189	5.2	III	10.37	761	1260					
	146	215	4.7	III	11.81	761	1260					
	128	245	4.3	III	13.49	758	1260					
	110	284	3.7	III	15.61	754	1260					
	92	342	2.2	III	18.79	749	1260					
	61	513	2.1	III	28.24	725	1260					
	53	587	1.8	II	32.27	711	1260					
	48	657	1.3	I	36.11	698	1260					
	42	750	1.4	II	41.26	675	1260					
	37	853	0.8	*	46.9	646	1260					
	32	974	0.8	*	53.59	605	1260					
	51	615	2.7	III	33.8	1042	2025			SK 92372 - 71L/4	49	472
	45	702	2.4	III	38.62	1033	2025					
	40	791	1.7	II	43.52	1024	2025					
	35	904	1.7	II	49.73	1010	2025					
	31	1000	1.0	I	55	997	2025					
	27	1143	1.0	I	62.85	974	2025					
	33	943	3.2	III	51.86	1364	2700			SK 92672 - 71L/4	86	476
	29	1077	3.1	III	59.25	1352	2700					
	213	147	8.6	III	8.09	1636	3188	2025	3188	SK 9012.1 - 71L/4	80	484
	186	168	8.3	III	9.23	1636	3308	2025	3308			
	159	197	8.0	III	10.85	1636	3465	2025	3465			
	141	222	7.7	III	12.23	1636	3589	2025	3589			
	112	278	8.6	III	15.3	1634	3832	2025	3832			
	99	317	8.3	III	17.45	1634	3983	2025	3983			
	82	379	8.3	III	20.87	1631	4194	2025	4194			
	70	446	7.9	III	24.53	1631	4385	2025	4385			
	62	503	7.0	III	27.65	1629	4500	2025	4500			
	55	572	6.2	III	31.45	1627	4500	2025	4500			
	49	633	5.6	III	34.81	1625	4500	2025	4500			
	41	757	4.7	III	41.65	1618	4500	2025	4500			
	35	890	4.0	III	48.95	1611	4500	2025	4500			
	31	1003	3.5	III	55.17	1602	4500	2025	4500			
	27	1141	3.1	III	62.74	1593	4500	2025	4500			
	22	1391	2.5	III	76.53	1571	4500	2025	4500			
	20	1564	2.3	III	86	1553	4500	2025	4500			
	18	1770	2.0	III	97.36	1530	4500	2025	4500			

(AGMA Class I = f_B 1.0 - 1.39 II = f_B 1.4 - 1.99 III = f_B ≥ 2.0 * = f_B < 1.0)

Send Quote Requests to info@automatedpt.com
Call +1(800)985-6929 To Order or Order Online At Nordgearmotors.com

0.5 hp Gearmotors



DRIVESYSTEMS

Motor Power P_n [hp]	Output Speed n_2 [rpm]	Output Torque T_2 [lb-in]	Service Factor f_B	AGMA Class	Gear Ratio i_{tot}	Standard Bearings F_{RN} OHL [lb]	Standard Bearings F_{AN} Thrust [lb]	Heavy Duty Bearings (VL) F_{RVL} OHL [lb]	Heavy Duty Bearings (VL) F_{AVL} Thrust [lb]	Model Type	Weight [lb]	Dim. Page
0.5	16	1996	1.8	II	109.79	1499	4500	2025	4500	SK 9012.1 - 71L/4	80	484
	14	2245	1.6	II	123.48	1460	4500	2025	4500			
	12	2558	1.4	II	140.7	1402	4500	2025	4500			
	9.4	3329	1.1	I	183.1	1213	4500	1978	4500			
	8.4	3744	0.9	*	205.93	1073	4500	1897	4500			
	7	4479	0.8	*	246.37	702	4500	1715	4500			
	19	1668	2.7	III	91.77	2025	4500	2025	4500	SK 9016.1 - 71L/4	82	492
	11	2724	2.0	III	149.81	2025	4500	2025	4500			
	9.4	3329	1.6	II	183.1	2025	4500	2025	4500			
	8.4	3744	1.4	II	205.93	1969	4500	2025	4500			
	7.3	4266	1.2	I	234.64	1881	4500	2025	4500			
	6.4	4872	1.1	I	267.99	1760	4500	2025	4500	SK 9017.1 - 71L/4	93	496
	4.7	6678	0.8	*	367.33	1193	4500	2025	4500			
	17	1798	4.2	III	98.88	2066	2700	2700	3767	SK 9022.1 - 71L/4	98	500
	9.3	3354	2.3	III	184.46	1910	2700	2700	4358			
	7.8	3986	1.9	II	219.25	1816	2700	2700	4543			
	7.4	4235	1.5	II	232.92	1771	2700	2682	4588			
	6.2	5034	1.4	II	276.86	1604	2700	2574	4775			
	5.8	5412	1.4	II	297.67	1505	2700	2516	4838	SK 9023.1 - 71L/4	109	504
	5.1	6171	1.2	I	339.41	1262	2700	2378	4955			
	3.6	8589	0.9	*	472.43		2700	1710	5191			
	6.9	4540	3.0	III	249.72	3290	3263	3375	4838	SK 9032.1 - 71L/4	142	508
	5.8	5379	2.6	III	295.85	3231	3263	3375	5029			
	6.4	4866	2.8	III	267.65	3269	3263	3375	4925	SK 9033.1 - 71L/4	159	512
	4.9	6404	2.1	III	352.25	3143	3263	3375	5218			
	4.3	7250	1.9	II	398.77	3058	3263	3375	5353			
	3.2	9801	1.4	II	539.1	2707	3263	3375	5654			
	2.5	12573	1.1	I	691.55	2113	3263	3375	5857			
	2	15884	0.9	*	873.65	311	3263	3272	6019			
	4.9	6376	3.9	III	350.72	6264	9000	6300	8129	SK 9043.1 - 71L/4	278	520
	3	10328	2.4	III	568.04	6120	9000	6300	9000			
	2.7	11730	2.1	III	645.18	6050	9000	6300	9000			
	2	16028	1.5	II	881.6	5776	9000	6300	9000			
	1.5	20240	1.2	I	1113.24	5402	9000	6300	9000			
	1.1	27584	0.9	*	1517.17	4428	9000	6300	9000			
	2.4	12796	2.8	III	703.83	8516	10125	8550	10125	SK 9053.1 - 71L/4	450	528
	1.8	16942	2.5	III	931.87	8363	10125	8550	10125			
	1.6	19324	2.2	III	1062.85	8253	10125	8550	10125			
	1.2	25432	1.7	II	1398.8	7900	10125	8550	10125			
	0.92	34044	1.2	I	1872.5	7189	10125	8550	10125			
	1.5	18972	4.0	III	1169.97	14632	11250	14850	11250	SK 9072.1/32 - 71L/4	794	532
	1.2	23568	3.2	III	1453.44	14533	11250	14850	11250			

(AGMA Class I = f_B 1.0 - 1.39 II = f_B 1.4 - 1.99 III = f_B ≥ 2.0 * = f_B < 1.0)

Send Quote Requests to info@automatedpt.com
Call +1(800)985-6929 To Order or Order Online At Nordgearmotors.com

DRIVESYSTEMS

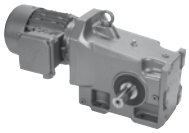



0.75 hp Gearmotors

Motor Power P_n [hp]	Output Speed n_2 [rpm]	Output Torque T_2 [lb-in]	Service Factor f_B	AGMA Class	Gear Ratio i_{tot}	Standard Bearings $F_{R\,N}$ OHL [lb]	Standard Bearings $F_{A\,N}$ Thrust [lb]	Heavy Duty Bearings (VL) $F_{R\,VL}$ OHL [lb]	Heavy Duty Bearings (VL) $F_{A\,VL}$ Thrust [lb]	Model Type	Weight [lb]	Dim. Page
0.75	444	106	4.1	III	3.85	583	790			SK 92072 - 80S/4	29	464
	326	145	3.6	III	5.24	639	882					
	295	160	4.1	III	5.79	659	918					
	266	178	3.3	III	6.44	680	945					
	217	218	3.6	III	7.87	718	1019					
	190	249	3.2	III	8.99	729	1069					
	177	268	3.0	III	9.68	727	1091					
	155	306	2.6	III	11.06	725	1139					
	126	375	1.8	II	13.55	716	1148					
	97	486	1.1	I	17.56	700	1148					
	84	564	1.4	II	20.37	686	1148					
	73	644	1.2	I	23.28	668	1148					
	65	730	1.1	I	26.39	648	1148					
	417	113	4.6	III	4.1	707	947			SK 92172 - 80S/4	40	468
	358	132	4.3	III	4.77	740	1008					
	321	148	4.3	III	5.33	763	1049					
	283	167	4.1	III	6.04	763	1105					
	243	195	4.3	III	7.04	761	1166					
	213	222	4.0	III	8.01	758	1222					
	189	251	3.7	III	9.07	756	1260					
	165	287	3.4	III	10.37	754	1260					
	145	327	3.1	III	11.81	749	1260					
	127	373	2.8	III	13.49	745	1260					
	110	432	2.5	III	15.61	738	1260					
	91	520	1.4	II	18.79	725	1260					
	75	631	1.7	II	22.78	702	1260					
	66	720	1.5	II	26.03	682	1260					
	61	782	1.4	II	28.24	666	1260					
	53	893	1.2	I	32.27	632	1260					
	47	999	0.9	*	36.11	594	1260					
	41	1142	0.9	*	41.26	531	1260					
	70	673	2.8	III	24.33	1035	2025			SK 92372 - 80S/4	53	472
	62	759	2.7	III	27.41	1026	2025					
	55	867	1.9	II	31.32	1015	2025					
	51	936	1.8	II	33.8	1006	2025					
	44	1069	1.6	II	38.62	988	2025					
	39	1205	1.1	I	43.52	963	2025					
	34	1376	1.1	I	49.73	932	2025					
	46	1033	2.8	III	37.32	1357	2700			SK 92672 - 80S/4	89	476
	41	1164	2.6	III	42.04	1346	2700					
	36	1329	2.5	III	48.03	1330	2700					
	33	1435	2.1	III	51.86	1319	2700					
	29	1640	2.0	III	59.25	1296	2700					

(AGMA Class I = f_B 1.0 - 1.39 II = f_B 1.4 - 1.99 III = f_B ≥ 2.0 * = f_B < 1.0)

Send Quote Requests to info@automatedpt.com
Call +1(800)985-6929 To Order or Order Online At Nordgearmotors.com

0.75 hp Gearmotors



DRIVESYSTEMS

Motor Power P_n [hp]	Output Speed n_2 [rpm]	Output Torque T_2 [lb-in]	Service Factor f_B	AGMA Class	Gear Ratio i_{tot}	Standard Bearings F_{RN} OHL [lb]	Standard Bearings F_{AN} Thrust [lb]	Heavy Duty Bearings (VL) F_{RVL} OHL [lb]	Heavy Duty Bearings (VL) F_{AVL} Thrust [lb]	Model Type	Weight [lb]	Dim. Page
0.75	211	224	5.6	III	8.09	1636	3168	2025	3168	SK 9012.1 - 80S/4	84	484
	185	255	5.5	III	9.23	1636	3285	2025	3285			
	158	300	5.3	III	10.85	1634	3443	2025	3443			
	140	339	5.1	III	12.23	1634	3560	2025	3560			
	112	423	5.6	III	15.3	1631	3803	2025	3803			
	98	483	5.5	III	17.45	1629	3944	2025	3944			
	82	578	5.5	III	20.87	1627	4147	2025	4147			
	70	679	5.2	III	24.53	1622	4336	2025	4336			
	62	765	4.6	III	27.65	1618	4478	2025	4478			
	54	870	4.1	III	31.45	1611	4500	2025	4500			
	49	963	3.7	III	34.81	1607	4500	2025	4500			
	41	1153	3.1	III	41.65	1593	4500	2025	4500			
	35	1355	2.6	III	48.95	1575	4500	2025	4500			
	31	1527	2.3	III	55.17	1557	4500	2025	4500			
	27	1737	2.0	III	62.74	1532	4500	2025	4500			
	22	2118	1.7	II	76.53	1481	4500	2025	4500			
	20	2380	1.5	II	86	1436	4500	2025	4500			
	18	2695	1.3	I	97.36	1375	4500	2025	4500			
	16	3039	1.2	I	109.79	1294	4500	2025	4500			
	24	1990	2.7	III	71.88	2025	4500	2025	4500	SK 9016.1 - 80S/4	86	492
	21	2252	2.4	III	81.38	2025	4500	2025	4500			
	19	2540	1.7	II	91.77	2025	4500	2025	4500			
	15	3225	1.7	II	116.52	2025	4500	2025	4500			
	12	3942	1.4	II	142.41	1937	4500	2025	4500			
	11	4146	1.3	I	149.81	1901	4500	2025	4500			
	9.3	5068	1.1	I	183.1	1715	4500	2025	4500			
	31	1551	2.3	III	56.02	1816	2700			SK 92772 - 80S/4	105	480
	27	1772	2.3	III	64.01	1802	2700					
	29	1612	4.7	III	58.25	2077	2700	2700	3213	SK 9022.1 - 80S/4	101	500
	26	1838	4.1	III	66.42	2061	2700	2700	3312			
	22	2184	3.5	III	78.89	2036	2700	2700	3454			
	20	2356	3.2	III	85.11	2021	2700	2700	3521			
	17	2737	2.8	III	98.88	1985	2700	2700	3641			
	15	3203	2.4	III	115.74	1931	2700	2700	3753			
	12	3808	2.0	III	137.57	1845	2700	2700	3908			
	10	4700	1.6	II	169.81	1679	2700	2624	4075			
	9.3	5106	1.5	II	184.46	1586	2700	2565	4120			
	7.8	6068	1.3	I	219.25	1301	2700	2399	4262			
	15	3066	4.5	III	110.77	3368	3263	3375	3859	SK 9032.1 - 80S/4	146	508
	8.7	5465	2.5	III	197.45	3224	3263	3375	4381			
	7.3	6474	2.1	III	233.92	3137	3263	3375	4532			
	6.8	6912	2.0	III	249.72	3094	3263	3375	4574			
	5.8	8189	1.7	II	295.85	2945	3263	3375	4723			

(AGMA Class I = f_B 1.0 - 1.39 II = f_B 1.4 - 1.99 III = f_B ≥ 2.0 * = f_B < 1.0)

Send Quote Requests to info@automatedpt.com
Call +1(800)985-6929 To Order or Order Online At Nordgearmotors.com

DRIVESYSTEMS

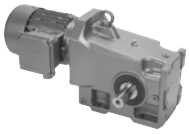



0.75 hp, 1.0 hp Gearmotors

Motor Power P_n [hp]	Output Speed n_2 [rpm]	Output Torque T_2 [lb-in]	Service Factor f_B	AGMA Class	Gear Ratio i_{tot}	Standard Bearings F_{RN} OHL [lb]	Standard Bearings F_{AN} Thrust [lb]	Heavy Duty Bearings (VL) F_{RVL} OHL [lb]	Heavy Duty Bearings (VL) F_{AVL} Thrust [lb]	Model Type	Weight [lb]	Dim. Page
0.75	4.9	9750	1.4	II	352.25	2716	3263	3375	4856	SK 9033.1 - 80S/4	163	512
	4.3	11037	1.2	I	398.77	2477	3263	3375	4950			
	4.9	9707	2.6	III	350.72	6147	9000	6300	7821	SK 9043.1 - 80S/4	282	520
	3	15722	1.6	II	568.04	5798	9000	6300	8627			
	2.7	17857	1.4	II	645.18	5627	9000	6300	8750			
	1.9	24401	1.0	I	881.6	4912	9000	6300	9000			
	1.5	30813	0.8	*	1113.24	3805	9000	6300	9000			
	2.4	19481	1.8	II	703.83	8246	10125	8550	10125	SK 9053.1 - 80S/4	454	528
	1.8	25793	1.6	II	931.87	7875	10125	8550	10125			
	1.6	29418	1.4	II	1062.85	7605	10125	8550	10125			
	1.2	38716	1.1	I	1398.8	6676	10125	8550	10125			
	1.5	30070	2.5	III	1169.97	14353	11250	14850	11250	SK 9072.1/32 - 80S/4	798	532
	1.2	37355	2.0	III	1453.44	14096	11250	14850	11250			
1.0	429	147	2.9	III	3.85	581	772			SK 92072 - 80L/4 SK 92072 - 80LH/4	31	464
	315	201	2.6	III	5.24	632	851					
	285	222	2.9	III	5.79	648	884					
	256	247	2.4	III	6.44	668	909					
	210	302	2.6	III	7.87	704	968					
	184	345	2.3	III	8.99	720	1015					
	170	372	2.1	III	9.68	716	1026					
	149	425	1.9	II	11.06	709	1069					
	122	521	1.3	I	13.55	693	1091					
	81	783	1.0	I	20.37	635	1148					
	71	894	0.9	*	23.28	599	1148					
	402	158	3.3	III	4.1	704	938			SK 92172 - 80L/4 SK 92172 - 80LH/4	42	468
	346	183	3.1	III	4.77	738	990					
	310	205	3.1	III	5.33	761	1033					
	273	232	2.9	III	6.04	758	1080					
	234	270	3.1	III	7.04	756	1139					
	206	308	2.9	III	8.01	752	1188					
	182	348	2.7	III	9.07	747	1240					
	159	398	2.4	III	10.37	743	1260					
	140	454	2.2	III	11.81	734	1260					
	122	518	2.0	III	13.49	725	1260					
	106	600	1.8	II	15.61	709	1260					
	88	722	1.0	I	18.79	682	1260					
	72	875	1.2	I	22.78	639	1260					
	63	1000	1.1	I	26.03	594	1260					
	58	1085	1.0	I	28.24	558	1260					
	51	1240	0.9	*	32.27	477	1260					

(AGMA Class I = f_B 1.0 - 1.39 II = f_B 1.4 - 1.99 III = f_B ≥ 2.0 * = f_B < 1.0) **(Model Type in blue is an Energy Efficient motor)**

Send Quote Requests to info@automatedpt.com
Call +1(800)985-6929 To Order or Order Online At Nordgearmotors.com

1.0 hp Gearmotors



DRIVESYSTEMS

Motor Power P_n [hp]	Output Speed n_2 [rpm]	Output Torque T_2 [lb-in]	Service Factor f_B	AGMA Class	Gear Ratio i_{tot}	Standard Bearings F_{RN} OHL [lb]	Standard Bearings F_{AN} Thrust [lb]	Heavy Duty Bearings (VL) F_{RVL} OHL [lb]	Heavy Duty Bearings (VL) F_{AVL} Thrust [lb]	Model Type	Weight [lb]	Dim. Page
1.0	113	563	3.0	III	14.65	1044	2025			SK 92372 - 80L/4 SK 92372 - 80LH/4	55	472
	68	935	2.0	III	24.33	1006	2025					
	60	1053	1.9	II	27.41	990	2025					
	53	1203	1.4	II	31.32	965	2025					
	49	1298	1.3	I	33.8	947	2025					
	43	1484	1.1	I	38.62	907	2025					
	39	1615	1.9	II	42.04	1298	2700			SK 92672 - 80L/4 SK 92672 - 80LH/4	92	476
	34	1845	1.8	II	48.03	1267	2700					
	32	1992	1.5	II	51.86	1244	2700					
	28	2276	1.5	II	59.25	1195	2700					
	204	311	4.1	III	8.09	1634	3173	2025	3173	SK 9012.1 - 80L/4 SK 9012.1 - 80LH/4	86	484
	179	355	3.9	III	9.23	1634	3292	2025	3292			
	152	417	3.8	III	10.85	1631	3443	2025	3443			
	135	470	3.7	III	12.23	1629	3560	2025	3560			
	108	588	4.1	III	15.3	1625	3803	2025	3803			
	95	670	3.9	III	17.45	1622	3944	2025	3944			
	79	802	3.9	III	20.87	1616	4147	2025	4147			
	67	942	3.8	III	24.53	1607	4322	2025	4322			
	60	1062	3.3	III	27.65	1600	4457	2025	4457			
	52	1208	2.9	III	31.45	1589	4500	2025	4500			
	47	1337	2.6	III	34.81	1577	4500	2025	4500			
	40	1600	2.2	III	41.65	1550	4500	2025	4500			
	34	1881	1.9	II	48.95	1514	4500	2025	4500			
	30	2119	1.7	II	55.17	1481	4500	2025	4500			
	26	2410	1.5	II	62.74	1431	4500	2025	4500			
	22	2940	1.2	I	76.53	1319	4500	2025	4500			
	19	3304	1.1	I	86	1220	4500	1982	4500			
	17	3740	0.9	*	97.36	1076	4500	1897	4500			
	15	4218	0.8	*	109.79	862	4500	1784	4500			
	31	2015	2.7	III	52.44	2025	4500	2025	4500	SK 9016.1 - 80L/4 SK 9016.1 - 80LH/4	88	492
	26	2458	2.2	III	63.97	2025	4500	2025	4500			
	23	2761	1.9	II	71.88	2025	4500	2025	4500			
	20	3126	1.7	II	81.38	2025	4500	2025	4500			
	18	3526	1.3	I	91.77	2000	4500	2025	4500			
	14	4476	1.2	I	116.52	1841	4500	2025	4500			
	12	5471	1.0	I	142.41	1611	4500	2025	4500			
	11	5755	0.9	*	149.81	1530	4500	2025	4500			
	9	7034	0.8	*	183.1	1017	4500	2025	4500			
	40	1566	2.5	III	40.77	1816	2700			SK 92772 - 80L/4 SK 92772 - 80LH/4	107	480
	36	1764	2.5	III	45.93	1802	2700					
	31	2016	2.5	III	52.48	1784	2700					
	29	2152	1.6	II	56.02	1773	2700					
	26	2459	1.7	II	64.01	1746	2700					

(AGMA Class I = f_B 1.0 - 1.39 II = f_B 1.4 - 1.99 III = f_B ≥ 2.0 * = f_B < 1.0) **(Model Type in blue is an Energy Efficient motor)**

Send Quote Requests to info@automatedpt.com
Call +1(800)985-6929 To Order or Order Online At Nordgearmotors.com

NORD DRIVESYSTEMS

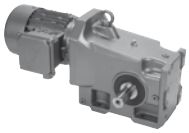



1.0 hp Gearmotors

Motor Power P_n [hp]	Output Speed n_2 [rpm]	Output Torque T_2 [lb-in]	Service Factor f_B	AGMA Class	Gear Ratio i_{tot}	Standard Bearings $F_{R\,N}$ OHL [lb]	Standard Bearings $F_{A\,N}$ Thrust [lb]	Heavy Duty Bearings (VL) $F_{R\,VL}$ OHL [lb]	Heavy Duty Bearings (VL) $F_{A\,VL}$ Thrust [lb]	Model Type	Weight [lb]	Dim. Page
1.0	67	944	3.7	III	24.56	2108	2700	2700	2538	**SK 9022.1 - 80L/4**	104	500
	63	1002	3.8	III	26.07	2106	2700	2700	2583	SK 9022.1 - 80LH/4		
	57	1122	3.7	III	29.2	2102	2700	2700	2664			
	50	1278	3.3	III	33.26	2095	2700	2700	2745			
	41	1528	4.1	III	39.77	2081	2700	2700	2882			
	37	1718	3.9	III	44.71	2070	2700	2700	2966			
	34	1883	3.7	III	49.01	2059	2700	2700	3024			
	32	1998	3.8	III	52.02	2050	2700	2700	3071			
	28	2238	3.4	III	58.25	2032	2700	2700	3157			
	25	2552	3.0	III	66.42	2003	2700	2700	3249			
	21	3031	2.5	III	78.89	1951	2700	2700	3382			
	19	3270	2.3	III	85.11	1922	2700	2700	3431			
	17	3799	2.0	III	98.88	1845	2700	2700	3537			
	14	4446	1.7	II	115.74	1730	2700	2657	3629			
	12	5285	1.4	II	137.57	1541	2700	2536	3753			
	9.7	6524	1.2	I	169.81	1118	2700	2304	3870			
	8.9	7086	1.1	I	184.46	817	2700	2174	3884			
	7.5	8423	0.9	*	219.25		2700	1771	3989			
	20	3234	3.7	III	84.17	3281	3263	3375	3551	**SK 9032.1 - 80L/4**	148	508
	18	3592	3.3	III	93.5	3344	3263	3375	3625	SK 9032.1 - 80LH/4		
	15	4255	3.2	III	110.77	3308	3263	3375	3769			
	8.4	7585	1.8	II	197.45	3020	3263	3375	4190			
	7.1	8987	1.5	II	233.92	2835	3263	3375	4311			
	6.6	9594	1.4	II	249.72	2743	3263	3375	4338			
	5.6	11366	1.2	I	295.85	2408	3263	3375	4430			
	4.7	13532	1.0	I	352.25	1816	3263	3375	4496	**SK 9033.1 - 80L/4**	165	512
	4.1	15320	0.9	*	398.77	954	3263	3375	4516	SK 9033.1 - 80LH/4		
	9.6	6611	3.4	III	172.08	6260	9000	6300	6516	**SK 9043.1 - 80L/4**	284	520
	8.1	7852	3.2	III	204.38	6219	9000	6300	6770	SK 9043.1 - 80LH/4		
	5.9	10741	2.3	III	279.6	6100	9000	6300	7243			
	4.7	13474	1.8	II	350.72	5951	9000	6300	7562			
	2.9	21822	1.1	I	568.04	5231	9000	6300	8129			
	2.6	24786	1.0	I	645.18	4860	9000	6300	8181			
	4.7	13404	3.2	III	348.91	8496	10125	8550	10125	**SK 9053.1 - 80L/4**	456	528
	3.6	17617	2.4	III	458.57	8334	10125	8550	10125	SK 9053.1 - 80LH/4		
	2.8	22280	1.9	II	579.95	8096	10125	8550	10125			
	2.3	27039	1.3	I	703.83	7787	10125	8550	10125			
	1.8	35800	1.2	I	931.87	7009	10125	8550	10125			
	1.6	40832	1.0	I	1062.85	6406	10125	8550	10125			
	1.2	53738	0.8	*	1398.8	3938	10125	8550	10125			
	2.1	27914	2.7	III	767.55	14418	11250	14850	11250	**SK 9072.1/32 - 80L/4**	800	532
	1.7	35411	2.1	III	973.69	14171	11250	14850	11250	SK 9072.1/32 - 80LH/4		
	1.4	42550	1.8	II	1169.97	13878	11250	14850	11250			
	1.1	52859	1.4	II	1453.44	13343	11250	14850	11250			

(AGMA Class I = f_B 1.0 - 1.39 II = f_B 1.4 - 1.99 III = f_B ≥ 2.0 * = f_B < 1.0) **(Model Type in blue is an Energy Efficient motor)**

Send Quote Requests to info@automatedpt.com
Call +1(800)985-6929 To Order or Order Online At Nordgearmotors.com

1.5 hp Gearmotors



DRIVESYSTEMS

Motor Power P_n [hp]	Output Speed n_2 [rpm]	Output Torque T_2 [lb-in]	Service Factor f_B	AGMA Class	Gear Ratio i_{tot}	Standard Bearings F_{RN} OHL [lb]	Standard Bearings F_{AN} Thrust [lb]	Heavy Duty Bearings (VL) F_{RVL} OHL [lb]	Heavy Duty Bearings (VL) F_{AVL} Thrust [lb]	Model Type	Weight [lb]	Dim. Page
1.5	431	219	2.8	III	3.85	558	707			**SK 92072 - 90S/4**	37	464
	287	330	2.1	III	5.79	617	797			SK 92072 - 90SH/4		
	405	234	2.8	III	4.1	686	891			**SK 92172 - 90S/4**	49	468
	348	272	2.6	III	4.77	716	934			SK 92172 - 90SH/4		
	311	304	2.5	III	5.33	738	968					
	275	344	2.3	III	6.04	747	1008					
	236	401	2.1	III	7.04	743	1055					
	207	457	1.9	II	8.01	734	1094					
	183	517	1.8	II	9.07	725	1130					
	160	591	1.6	II	10.37	711	1172					
	175	540	2.9	III	9.47	1046	1904			**SK 92372 - 90S/4**	62	472
	153	618	2.6	III	10.84	1040	1989			SK 92372 - 90SH/4		
	146	650	2.7	III	11.39	1037	2025					
	128	742	2.3	III	13.01	1028	2025					
	113	835	2	III	14.65	1019	2025					
	97	973	2.1	III	17.06	1001	2025					
	86	1095	1.9	II	19.21	983	2025					
	76	1252	1.4	II	21.95	956	2025					
	68	1387	1.3	I	24.33	929	2025					
	61	1563	1.3	I	27.41	887	2025					
	53	1786	0.9	*	31.32	826	2025					
	63	1514	1.9	II	26.55	1310	2700			**SK 92672 - 90S/4**	98	476
	55	1706	1.8	II	29.91	1287	2700			SK 92672 - 90SH/4		
	49	1949	1.7	II	34.17	1251	2700					
	44	2128	1.4	II	37.32	1222	2700					
	39	2397	1.3	I	42.04	1172	2700					
	35	2739	1.2	I	48.03	1094	2700					
	205	461	3.5	III	8.09	1629	3121	2025	3121	**SK 9012.1 - 90S/4**	93	484
	180	526	3.3	III	9.23	1627	3233	2025	3233	SK 9012.1 - 90SH/4		
	153	619	2.9	III	10.85	1625	3377	2025	3377			
	136	697	2.8	III	12.23	1620	3481	2025	3481			
	108	872	3.9	III	15.3	1611	3717	2025	3717			
	95	995	3.4	III	17.45	1604	3845	2025	3845			
	80	1190	3.0	III	20.87	1589	4028	2025	4028			
	68	1399	2.5	III	24.53	1571	4194	2025	4194			
	60	1577	2.2	III	27.65	1553	4322	2025	4322			
	53	1793	2.0	III	31.45	1526	4442	2025	4442			
	48	1985	1.8	II	34.81	1501	4500	2025	4500			
	40	2375	1.5	II	41.65	1438	4500	2025	4500			
	34	2791	1.3	I	48.95	1352	4500	2025	4500			
	30	3146	1.1	I	55.17	1265	4500	2012	4500			
	26	3578	1.0	I	62.74	1134	4500	1931	4500			
	22	4364	0.8	*	76.53	776	4500	1746	4500			

(AGMA Class I = f_B 1.0 - 1.39 II = f_B 1.4 - 1.99 III = f_B ≥ 2.0 * = f_B < 1.0) **(Model Type in blue is an Energy Efficient motor)**

Send Quote Requests to info@automatedpt.com
Call +1(800)985-6929 To Order or Order Online At Nordgearmotors.com

DRIVESYSTEMS

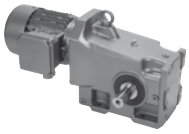



1.5 hp Gearmotors

Motor Power P_n [hp]	Output Speed n_2 [rpm]	Output Torque T_2 [lb-in]	Service Factor f_B	AGMA Class	Gear Ratio i_{tot}	Standard Bearings F_{RN} OHL [lb]	Standard Bearings F_{AN} Thrust [lb]	Heavy Duty Bearings (VL) F_{RVL} OHL [lb]	Heavy Duty Bearings (VL) F_{AVL} Thrust [lb]	Model Type	Weight [lb]	Dim. Page
1.5	54	1740	3.1	III	30.52	2025	4408	2025	4408	**SK 9016.1 - 90S/4**	95	492
	48	1985	2.7	III	34.81	2025	4500	2025	4500	SK 9016.1 - 90SH/4		
	41	2333	2.3	III	40.92	2025	4500	2025	4500			
	36	2629	2.1	III	46.11	2025	4500	2025	4500			
	32	2990	1.8	II	52.44	2025	4500	2025	4500			
	26	3648	1.5	II	63.97	1982	4500	2025	4500			
	23	4099	1.3	I	71.88	1910	4500	2025	4500			
	20	4641	1.1	I	81.38	1809	4500	2025	4500			
	52	1827	3.1	III	32.04	1798	2700			**SK 92772 - 90S/4**	114	480
	45	2088	2.8	III	36.61	1780	2700			SK 92772 - 90SH/4		
	41	2325	1.7	II	40.77	1757	2700					
	36	2619	1.7	II	45.93	1730	2700					
	32	2993	1.7	II	52.48	1688	2700					
	53	1789	4.1	III	31.38	2066	2700	2700	2626	**SK 9022.1 - 90S/4**	110	500
	50	1897	3.3	III	33.26	2059	2700	2700	2655	SK 9022.1 - 90SH/4		
	42	2268	3.4	III	39.77	2030	2700	2700	2772			
	37	2550	3.0	III	44.71	2003	2700	2700	2844			
	34	2795	2.7	III	49.01	1978	2700	2700	2887			
	32	2966	2.6	III	52.02	1960	2700	2700	2932			
	28	3322	2.3	III	58.25	1915	2700	2700	2999			
	25	3788	2.0	III	66.42	1847	2700	2700	3071			
	21	4499	1.7	II	78.89	1721	2700	2651	3161			
	17	5639	1.3	I	98.88	1440	2700	2477	3269			
	22	4329	3.2	III	75.91	3020	3263	3375	3299	**SK 9032.1 - 90S/4**	154	508
	20	4800	2.9	III	84.17	3089	3263	3375	3368	SK 9032.1 - 90SH/4		
	18	5332	2.6	III	93.5	3148	3263	3375	3422			
	15	6317	2.2	III	110.77	3152	3263	3375	3539			
	14	6712	2.0	III	117.7	3114	3263	3375	3551			
	12	7951	1.7	II	139.44	2975	3263	3375	3650			
	10	9052	1.5	II	158.74	2826	3263	3375	3690			
	8.8	10724	1.3	I	188.06	2540	3263	3375	3769			
	8.4	11259	1.2	I	197.45	2430	3263	3375	3762			
	7.1	13339	1.0	I	233.92	1881	3263	3375	3812			
	6.6	14240	1.0	I	249.72	1546	3263	3375	3791			
	5.6	16871	0.8	*	295.85		3263	3033	3805			
	17	5449	4.1	III	95.56	6289	9000	6300	5461	**SK 9042.1 - 90S/4**	258	516
	14	6717	3.2	III	117.79	6255	9000	6300	5722	SK 9042.1 - 90SH/4		
	10	9423	1.4	II	165.24	6161	9000	6300	6140			
	8.5	11126	2.2	III	195.12	6082	9000	6300	6309			
	7.1	13401	1.8	II	235.01	5956	9000	6300	6557			
	6.1	15609	1.6	II	273.73	5807	9000	6300	6653			
	5	18800	1.3	I	329.69	5542	9000	6300	6869			

(AGMA Class I = f_B 1.0 - 1.39 II = f_B 1.4 - 1.99 III = f_B ≥ 2.0 * = f_B < 1.0) **(Model Type in blue is an Energy Efficient motor)**

Send Quote Requests to info@automatedpt.com
Call +1(800)985-6929 To Order or Order Online At Nordgearmotors.com

1.5 hp, 2.0 hp Gearmotors



DRIVESYSTEMS

Motor Power P_n [hp]	Output Speed n_2 [rpm]	Output Torque T_2 [lb-in]	Service Factor f_B	AGMA Class	Gear Ratio i_{tot}	Standard Bearings F_{RN} OHL [lb]	Standard Bearings F_{AN} Thrust [lb]	Heavy Duty Bearings (VL) F_{RVL} OHL [lb]	Heavy Duty Bearings (VL) F_{AVL} Thrust [lb]	Model Type	Weight [lb]	Dim. Page
1.5	4.7	19999	1.2	I	350.72	5427	9000	6300	6914	**SK 9043.1 - 90S/4**	291	520
	4.1	23084	1.1	I	404.82	5083	9000	6300	6935	SK 9043.1 - 90SH/4		
	2.9	32392	0.8	*	568.04	3429	9000	6300	7117			
	6.7	14088	3.0	III	247.06	8474	10125	8550	10125	**SK 9052.1 - 90S/4**	423	524
	5.7	16515	2.6	III	289.61	8381	10125	8550	10125	SK 9052.1 - 90SH/4		
	4.8	19896	2.1	III	348.91	8226	10125	8550	10125	**SK 9053.1 - 90S/4**	463	528
	3.6	26149	1.6	II	458.57	7850	10125	8550	10125	SK 9053.1 - 90SH/4		
	2.9	33071	1.3	I	579.95	7283	10125	8550	10125			
	2.4	40135	0.9	*	703.83	6498	10125	8550	10125			
	1.8	53139	0.8	*	931.87	4104	10125	8550	10125			
	4.3	22004	3.4	III	385.88	14569	11250	14850	11250	**SK 9072.1/32 - 90S/4**	807	552
	3.5	26985	2.8	III	473.22	14443	11250	14850	11250	SK 9072.1/32 - 90SH/4		
	2.8	34116	2.2	III	598.27	14218	11250	14850	11250			
	2.2	43769	1.7	II	767.55	13822	11250	14850	11250			
	1.7	55524	1.4	II	973.69	13181	11250	14850	11250			
	1.4	66716	1.1	I	1169.97	12386	11250	14850	11250			
	1.1	82881	0.9	*	1453.44	10845	11250	14850	11250			
	2.4	40172	2.9	III	704.48	21375	13500	21375	13500	**SK 9082.1/42 - 90S/4**	1418	552
	2	48207	2.4	III	845.38	21283	13500	21375	13500	SK 9082.1/42 - 90SH/4		
	1.6	58037	2.0	III	1017.77	21053	13500	21375	13500			
	1.1	83700	1.4	II	1467.8	20234	13500	21375	13500			
	2.3	40724	4.3	III	714.15	27000	14625	27000	14625	**SK 9086.1/52 - 90S/4**	2024	552
	1.8	51771	3.4	III	907.88	27000	14625	27000	14625	SK 9086.1/52 - 90SH/4		
	1.4	68553	2.6	III	1202.18	26843	14625	27000	14625			
	1.1	83449	2.1	III	1463.4	26447	14625	27000	14625			
	0.62	152770	2.9	III	2679.06	49500	22500			**SK 9096.1/63 - 90S/4**	4161	553
	0.52	183053	2.4	III	3210.12	49500	22500			SK 9096.1/63 - 90SH/4		
	0.45	210559	2.1	III	3692.48	49500	22500					
	0.37	253267	1.7	II	4441.42	49500	22500					
	0.30	317945	1.4	II	5575.65	49500	22500					
	0.25	382433	1.2	I	6706.55	49500	22500					
	0.21	447200	1.0	I	7842.34	49500	22500					
	0.20	473673	0.9	*	8306.57	49500	22500					
	0.17	553891	0.8	*	9713.32	49500	22500					
2.0	431	292	2.1	III	3.85	538	650			**SK 92072 - 90L/4**	42	464
	287	439	1.6	II	5.79	585	711			SK 92072 - 90LH/4		

(AGMA Class I = f_B 1.0 - 1.39 II = f_B 1.4 - 1.99 III = f_B ≥ 2.0 * = f_B < 1.0) **(Model Type in blue is an Energy Efficient motor)**

Send Quote Requests to info@automatedpt.com
Call +1(800)985-6929 To Order or Order Online At Nordgearmotors.com

DRIVESYSTEMS

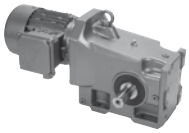



2.0 hp Gearmotors

Motor Power P_n [hp]	Output Speed n_2 [rpm]	Output Torque T_2 [lb-in]	Service Factor f_B	AGMA Class	Gear Ratio i_{tot}	Standard Bearings $F_{R\,N}$ OHL [lb]	Standard Bearings $F_{A\,N}$ Thrust [lb]	Heavy Duty Bearings (VL) $F_{R\,VL}$ OHL [lb]	Heavy Duty Bearings (VL) $F_{A\,VL}$ Thrust [lb]	Model Type	Weight [lb]	Dim. Page
2.0	405	311	2.1	III	4.1	668	842			**SK 92172 - 90L/4**	53	468
	348	362	2.0	III	4.77	695	882			SK 92172 - 90LH/4		
	311	404	1.9	II	5.33	713	911					
	275	458	1.7	II	6.04	734	938					
	236	534	1.6	II	7.04	722	977					
	207	608	1.5	II	8.01	709	1001					
	183	688	1.4	II	9.07	691	1028					
	160	787	1.2	I	10.37	666	1051					
	313	402	2.7	III	5.3	1010	1483			**SK 92372 - 90L/4**	66	472
	278	453	2.7	III	5.97	1046	1555			SK 92372 - 90LH/4		
	256	492	2.6	III	6.49	1051	1589					
	227	555	2.6	III	7.32	1046	1661					
	200	629	2.5	III	8.29	1040	1730					
	175	718	2.2	III	9.47	1031	1811					
	153	822	1.9	II	10.84	1019	1886					
	146	864	2.0	III	11.39	1015	1904					
	128	987	1.7	II	13.01	999	1985					
	113	1111	1.5	II	14.65	981	2025					
	97	1294	1.6	II	17.06	947	2025					
	86	1457	1.4	II	19.21	914	2025					
	76	1665	1.0	I	21.95	860	2025					
	68	1846	1.0	I	24.33	806	2025					
	61	2079	1.0	I	27.41	720	2025					
	191	661	3.0	III	8.71	1379	2300			**SK 92672 - 90L/4**	103	476
	170	742	2.9	III	9.78	1375	2394			SK 92672 - 90LH/4		
	151	836	2.9	III	11.02	1370	2516					
	131	959	2.8	III	12.64	1361	2626					
	118	1068	2.7	III	14.08	1352	2700					
	103	1220	2.7	III	16.08	1341	2700					
	63	2014	1.4	II	26.55	1242	2700					
	55	2269	1.3	I	29.91	1197	2700					
	49	2592	1.3	I	34.17	1130	2700					
	44	2831	1.0	I	37.32	1071	2700					
	39	3189	0.9	*	42.04	965	2700					
	35	3644	0.9	*	48.03	790	2700					
	205	614	2.6	III	8.09	1625	3076	2025	3076	**SK 9012.1 - 90L/4**	97	484
	180	700	2.5	III	9.23	1620	3188	2025	3188	SK 9012.1 - 90LH/4		
	153	823	2.2	III	10.85	1613	3319	2025	3319			
	136	928	2.1	III	12.23	1609	3420	2025	3420			
	108	1161	2.9	III	15.3	1591	3647	2025	3647			
	95	1324	2.5	III	17.45	1577	3760	2025	3760			

(AGMA Class I = f_B 1.0 - 1.39 II = f_B 1.4 - 1.99 III = f_B ≥ 2.0 * = f_B < 1.0) **(Model Type in blue is an Energy Efficient motor)**

Send Quote Requests to info@automatedpt.com
Call +1(800)985-6929 To Order or Order Online At Nordgearmotors.com

2.0 hp Gearmotors



DRIVESYSTEMS

Motor Power P_n [hp]	Output Speed n_2 [rpm]	Output Torque T_2 [lb-in]	Service Factor f_B	AGMA Class	Gear Ratio i_{tot}	Standard Bearings F_{RN} OHL [lb]	Standard Bearings F_{AN} Thrust [lb]	Heavy Duty Bearings (VL) F_{RVL} OHL [lb]	Heavy Duty Bearings (VL) F_{AVL} Thrust [lb]	Model Type	Weight [lb]	Dim. Page
2.0	80	1583	2.2	III	20.87	1550	3933	2025	3933	**SK 9012.1 - 90L/4**	97	484
	68	1861	1.9	II	24.53	1517	4075	2025	4075	SK 9012.1 - 90LH/4		
	60	2098	1.7	II	27.65	1483	4178	2025	4178			
	53	2386	1.5	II	31.45	1436	4295	2025	4295			
	48	2641	1.3	I	34.81	1386	4365	2025	4365			
	40	3160	1.1	I	41.65	1262	4500	2009	4500			
	34	3713	1.0	I	48.95	1085	4500	1904	4500			
	30	4185	0.8	*	55.17	878	4500	1793	4500			
	81	1556	3.0	III	20.51	2025	3902	2025	3902	**SK 9016.1 - 90L/4**	99	492
	72	1753	2.6	III	23.11	2025	4010	2025	4010	SK 9016.1 - 90LH/4		
	63	1994	2.7	III	26.29	2025	4120	2025	4120			
	54	2315	2.3	III	30.52	2025	4255	2025	4255			
	48	2641	2.0	III	34.81	2025	4365	2025	4365			
	41	3104	1.7	II	40.92	2025	4500	2025	4500			
	36	3498	1.5	II	46.11	2005	4500	2025	4500			
	32	3978	1.4	II	52.44	1931	4500	2025	4500			
	26	4853	1.1	I	63.97	1764	4500	2025	4500			
	23	5453	1.0	I	71.88	1618	4500	2025	4500			
	20	6174	0.9	*	81.38	1395	4500	2025	4500			
	153	825	3.0	III	10.88	1638	2567			**SK 92772 - 90L/4**	118	480
	134	943	3.0	III	12.43	1703	2700			SK 92772 - 90LH/4		
	119	1055	2.9	III	13.91	1757	2700					
	106	1183	2.7	III	15.6	1814	2700					
	93	1353	2.7	III	17.83	1827	2700					
	58	2158	2.5	III	28.44	1773	2700					
	52	2431	2.3	III	32.04	1748	2700					
	45	2777	2.1	III	36.61	1712	2700					
	41	3093	1.3	I	40.77	1674	2700					
	36	3484	1.3	I	45.93	1620	2700					
	32	3981	1.3	I	52.48	1537	2700					
	74	1700	3.1	III	22.41	1949	2700	2700	2363	**SK 9022.1 - 90L/4**	115	500
	68	1863	2.8	III	24.56	1982	2700	2700	2403	SK 9022.1 - 90LH/4		
	64	1978	3.0	III	26.07	2018	2700	2700	2444			
	57	2215	2.8	III	29.2	2034	2700	2700	2507			
	53	2381	3.0	III	31.38	2018	2700	2700	2547			
	50	2523	2.5	III	33.26	2005	2700	2700	2563			
	42	3017	2.5	III	39.77	1953	2700	2700	2669			
	37	3392	2.2	III	44.71	1906	2700	2700	2725			
	34	3718	2.0	III	49.01	1859	2700	2700	2759			
	32	3946	1.9	II	52.02	1823	2700	2700	2795			
	28	4419	1.7	II	58.25	1737	2700	2660	2844			
	25	5039	1.5	II	66.42	1602	2700	2574	2905			
	21	5985	1.3	I	78.89	1330	2700	2414	2957			
	17	7501	1.0	I	98.88	450	2700	2066	3008			

(AGMA Class I = f_B 1.0 - 1.39 II = f_B 1.4 - 1.99 III = f_B ≥ 2.0 * = f_B < 1.0) **(Model Type in blue is an Energy Efficient motor)**

Send Quote Requests to info@automatedpt.com
Call +1(800)985-6929 To Order or Order Online At Nordgearmotors.com

DRIVESYSTEMS

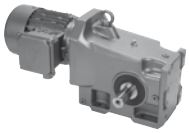



2.0 hp Gearmotors

Motor Power P_n [hp]	Output Speed n_2 [rpm]	Output Torque T_2 [lb-in]	Service Factor f_B	AGMA Class	Gear Ratio i_{tot}	Standard Bearings $F_{R\,N}$ OHL [lb]	Standard Bearings $F_{A\,N}$ Thrust [lb]	Heavy Duty Bearings (VL) $F_{R\,VL}$ OHL [lb]	Heavy Duty Bearings (VL) $F_{A\,VL}$ Thrust [lb]	Model Type	Weight [lb]	Dim. Page
2.0	41	3062	3.6	III	40.36	2500	3263	3375	2788	**SK 9032.1 - 90L/4**	159	508
	35	3619	3.5	III	47.7	2599	3263	3375	2891	SK 9032.1 - 90LH/4		
	33	3789	3.3	III	49.94	2617	3263	3375	2905			
	28	4489	3.1	III	59.17	2723	3263	3375	3011			
	26	4861	2.8	III	64.08	2759	3263	3375	3044			
	22	5759	2.4	III	75.91	2855	3263	3375	3139			
	20	6385	2.1	III	84.17	2903	3263	3375	3188			
	18	7093	1.9	II	93.5	2939	3263	3375	3231			
	15	8403	1.6	II	110.77	2918	3263	3375	3299			
	14	8929	1.5	II	117.7	2844	3263	3375	3299			
	12	10578	1.3	I	139.44	2570	3263	3375	3357			
	10	12042	1.1	I	158.74	2250	3263	3375	3353			
	8.8	14267	1.0	I	188.06	1535	3263	3375	3368			
	8.4	14979	0.9	*	197.45	1179	3263	3375	3337			
	7.1	17746	0.8	*	233.92		3263	2792	3314			
	19	6557	3.2	III	86.43	6260	9000	6300	5171	**SK 9042.1 - 90L/4**	262	516
	17	7249	3.1	III	95.56	6239	9000	6300	5299	SK 9042.1 - 90LH/4		
	14	8936	2.4	III	117.79	6179	9000	6300	5524			
	10	12535	1.1	I	165.24	6005	9000	6300	5841			
	8.5	14802	1.7	II	195.12	5864	9000	6300	5947			
	7.1	17828	1.4	II	235.01	5630	9000	6300	6120			
	6.1	20766	1.2	I	273.73	5348	9000	6300	6149			
	5	25011	1.0	I	329.69	4829	9000	6300	6269			
	11	11012	2.9	III	145.16	8550	10125	8550	9284	**SK 9052.1 - 90L/4**	428	524
	6.7	18742	2.3	III	247.06	8282	10125	8550	10125	SK 9052.1 - 90LH/4		
	5.7	21970	1.9	II	289.61	8114	10125	8550	10125			
	4.8	26469	1.6	II	348.91	7828	10125	8550	10125	**SK 9053.1 - 90L/4**	467	528
	3.6	34788	1.2	I	458.57	7115	10125	8550	10125	SK 9053.1 - 90LH/4		
	8.5	14878	4.1	III	196.12	14702	11250	14850	11250	**SK 9072.1/42 - 90L/4**	849	552
	6.2	20436	3.6	III	269.39	14603	11250	14850	11250	SK 9072.1/42 - 90LH/4		
	5.3	23601	3.2	III	311.1	14531	11250	14850	11250	**SK 9072.1/32 - 90L/4**	811	552
	4.3	29274	2.6	III	385.88	14378	11250	14850	11250	SK 9072.1/32 - 90LH/4		
	3.5	35899	2.1	III	473.22	14153	11250	14850	11250			
	2.8	45386	1.7	II	598.27	13743	11250	14850	11250			
	2.2	58228	1.3	I	767.55	13007	11250	14850	11250			
	1.7	73866	1.0	I	973.69	11770	11250	14850	11250			
	1.4	88756	0.8	*	1169.97	10132	11250	14850	11250			
	3.7	33638	3.4	III	443.41	21375	13500	21375	13500	**SK 9082.1/42 - 90L/4**	1422	552
	2.8	45773	2.5	III	603.37	21332	13500	21375	13500	SK 9082.1/42 - 90LH/4		
	2.4	53443	2.2	III	704.48	21166	13500	21375	13500			
	2	64132	1.8	II	845.38	20887	13500	21375	13500			

(AGMA Class I = f_B 1.0 - 1.39 II = f_B 1.4 - 1.99 III = f_B ≥ 2.0 * = f_B < 1.0) **(Model Type in blue is an Energy Efficient motor)**

Send Quote Requests to info@automatedpt.com
Call +1(800)985-6929 To Order or Order Online At Nordgearmotors.com

2.0 hp, 3.0 hp Gearmotors



DRIVESYSTEMS

Motor Power P_n [hp]	Output Speed n_2 [rpm]	Output Torque T_2 [lb-in]	Service Factor f_B	AGMA Class	Gear Ratio i_{tot}	Standard Bearings F_{RN} OHL [lb]	Standard Bearings F_{AN} Thrust [lb]	Heavy Duty Bearings (VL) F_{RVL} OHL [lb]	Heavy Duty Bearings (VL) F_{AVL} Thrust [lb]	Model Type	Weight [lb]	Dim. Page
2.0	1.6	77210	1.5	II	1017.77	20473	13500	21375	13500	**SK 9082.1/42 - 90L/4**	1422	552
	1.1	111350	1.0	I	1467.8	18952	13500	21375	13500	**SK 9082.1/42 - 90LH/4**		
	1.8	68874	2.6	III	907.88	26836	14625	27000	14625	**SK 9086.1/52 - 90L/4**	2029	552
	1.4	91200	1.9	II	1202.18	26208	14625	27000	14625	**SK 9086.1/52 - 90LH/4**		
	1.1	111017	1.6	II	1463.4	25488	14625	27000	14625			
	1.5	84966	3.3	III	1120	35019	15750	36000	15750	**SK 9092.1/52 - 90L/4**	3285	552
	1.2	108088	2.6	III	1424.8	34598	15750	36000	15750	**SK 9092.1/52 - 90LH/4**		
	0.81	155677	2.8	III	2052.10	49500	22500			**SK 9096.1/63 - 90L/4**	4165	553
	0.72	175717	2.5	III	2316.27	49500	22500			**SK 9096.1/63 - 90LH/4**		
	0.62	203239	2.2	III	2679.06	49500	22500					
	0.52	243526	1.8	II	3210.12	49500	22500					
	0.45	280119	1.6	II	3692.48	49500	22500					
	0.37	336935	1.3	I	4441.42	49500	22500					
	0.30	422980	1.0	I	5575.65	49500	22500					
	0.25	508773	0.9	*	6706.55	49500	22500					
3.0	322	588	2.2	III	5.3	968	1366			**SK 92372 - 100L/4**	75	472
	286	663	2.1	III	5.97	997	1422			**SK 92372 - 100LH/4**		
	263	721	2.0	III	6.49	1017	1447					
	233	813	1.8	II	7.32	1022	1510					
	206	921	1.7	II	8.29	1008	1555					
	180	1052	1.5	II	9.47	990	1620					
	157	1204	1.3	I	10.84	965	1661					
	150	1265	1.4	II	11.39	954	1670					
	131	1445	1.2	I	13.01	916	1721					
	100	1894	1.1	I	17.06	790	1744					
	89	2133	1.0	I	19.21	698	1780					
	196	967	2.9	III	8.71	1361	2129			**SK 92672 - 100L/4**	111	476
	174	1086	2.6	III	9.78	1352	2205			**SK 92672 - 100LH/4**		
	155	1224	2.4	III	11.02	1341	2302					
	135	1404	2.1	III	12.64	1323	2394					
	121	1563	1.9	II	14.08	1305	2464					
	106	1785	1.8	II	16.08	1276	2619					
	94	2008	1.4	II	18.08	1242	2592					
	84	2262	1.3	I	20.37	1199	2682					
	73	2585	1.3	I	23.28	1132	2700					
	64	2948	1.0	I	26.55	1040	2700					
	57	3321	0.9	*	29.91	920	2700					
	50	3794	0.9	*	34.17	716	2700					

(AGMA Class I = f_B 1.0 - 1.39 II = f_B 1.4 - 1.99 III = f_B ≥ 2.0 * = f_B < 1.0) **(Model Type in blue is an Energy Efficient motor)**

Send Quote Requests to info@automatedpt.com
Call +1(800)985-6929 To Order or Order Online At Nordgearmotors.com

DRIVESYSTEMS

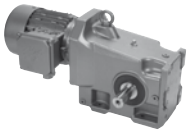



3.0 hp Gearmotors

Motor Power P_n [hp]	Output Speed n_2 [rpm]	Output Torque T_2 [lb-in]	Service Factor f_B	AGMA Class	Gear Ratio i_{tot}	Standard Bearings $F_{R\,N}$ OHL [lb]	Standard Bearings $F_{A\,N}$ Thrust [lb]	Heavy Duty Bearings (VL) $F_{R\,VL}$ OHL [lb]	Heavy Duty Bearings (VL) $F_{A\,VL}$ Thrust [lb]	Model Type	Weight [lb]	Dim. Page
3.0	211	898	1.8	II	8.09	1609	2966	2025	2966	**SK 9012.1 - 100L/4**	106	484
	185	1025	1.7	II	9.23	1602	3058	2025	3058	SK 9012.1 - 100LH/4		
	157	1205	1.5	II	10.85	1589	3173	2025	3173			
	139	1358	1.4	II	12.23	1575	3254	2025	3254			
	111	1699	2.0	III	15.3	1537	3470	2025	3470			
	98	1938	1.7	II	17.45	1508	3566	2025	3566			
	82	2317	1.5	II	20.87	1447	3713	2025	3713			
	70	2724	1.3	I	24.53	1368	3827	2025	3827			
	62	3070	1.2	I	27.65	1285	3902	2023	3902			
	54	3492	1.0	I	31.45	1161	3971	1949	3971			
	49	3865	0.9	*	34.81	1026	4003	1870	4003			
	41	4625	0.8	*	41.65	592	4106	1672	4106			
	136	1389	3.0	III	12.51	2025	3308	2025	3308	**SK 9016.1 - 100L/4**	108	492
	113	1677	2.7	III	15.1	2025	3465	2025	3465	SK 9016.1 - 100LH/4		
	98	1938	2.5	III	17.45	2025	3566	2025	3566			
	83	2277	2.3	III	20.51	2025	3683	2025	3683			
	74	2566	1.8	II	23.11	2025	3760	2025	3760			
	65	2919	1.8	II	26.29	2025	3845	2025	3845			
	56	3389	1.6	II	30.52	2018	3933	2025	3933			
	49	3865	1.4	II	34.81	1949	4003	2025	4003			
	42	4544	1.2	I	40.92	1829	4075	2025	4075			
	37	5120	1.1	I	46.11	1701	4113	2025	4113			
	33	5823	0.9	*	52.44	1510	4147	2025	4147			
	27	7103	0.8	*	63.97	977	4154	2025	4154			
	137	1380	2.9	III	12.43	1627	2516			**SK 92772 - 100L/4**	127	480
	123	1545	2.8	III	13.91	1676	2597			SK 92772 - 100LH/4		
	109	1732	2.4	III	15.6	1717	2678					
	96	1980	2.4	III	17.83	1775	2700					
	86	2191	2.4	III	19.73	1771	2700					
	77	2467	2.2	III	22.22	1744	2700					
	67	2819	2.0	III	25.39	1708	2700					
	60	3158	1.7	II	28.44	1665	2700					
	53	3558	1.6	II	32.04	1609	2700					
	47	4065	1.4	II	36.61	1521	2700					
	153	1236	3.0	III	11.13	1521	2466	2700	1899	**SK 9022.1 - 100L/4**	123	500
	136	1389	2.8	III	12.51	1564	2567	2700	1949	SK 9022.1 - 100LH/4		
	117	1617	2.6	III	14.56	1627	2700	2700	2016			
	105	1810	2.4	III	16.3	1667	2700	2700	2063			
	97	1945	3.3	III	17.52	1694	2700	2700	2097			
	86	2213	3.0	III	19.93	1771	2700	2700	2180			
	76	2488	2.8	III	22.41	1816	2700	2700	2230			
	69	2727	2.4	III	24.56	1838	2700	2700	2259			
	65	2895	2.6	III	26.07	1872	2700	2700	2297			
	58	3242	2.3	III	29.2	1910	2700	2700	2340			
	54	3484	2.1	III	31.38	1892	2700	2700	2369			
	51	3693	1.7	II	33.26	1861	2700	2700	2374			

(AGMA Class I = f_B 1.0 - 1.39 II = f_B 1.4 - 1.99 III = f_B ≥ 2.0 * = f_B < 1.0) **(Model Type in blue is an Energy Efficient motor)**

Send Quote Requests to info@automatedpt.com
Call +1(800)985-6929 To Order or Order Online At Nordgearmotors.com

3.0 hp Gearmotors



DRIVESYSTEMS

Motor Power P_n [hp]	Output Speed n_2 [rpm]	Output Torque T_2 [lb-in]	Service Factor f_B	AGMA Class	Gear Ratio i_{tot}	Standard Bearings F_{RN} OHL [lb]	Standard Bearings F_{AN} Thrust [lb]	Heavy Duty Bearings (VL) F_{RVL} OHL [lb]	Heavy Duty Bearings (VL) F_{AVL} Thrust [lb]	Model Type	Weight [lb]	Dim. Page
3.0	43	4416	1.7	II	39.77	1737	2700	2660	2446	**SK 9022.1 - 100L/4**	123	500
	38	4964	1.5	II	44.71	1620	2700	2585	2477	SK 9022.1 - 100LH/4		
	35	5442	1.4	II	49.01	1499	2700	2511	2477			
	33	5776	1.3	I	52.02	1400	2700	2453	2518			
	29	6468	1.2	I	58.25	1143	2700	2318	2531			
	26	7375	1.0	I	66.42	590	2700	2099	2547			
	22	8760	0.9	*	78.89		2700	1643	2547			
	57	3293	3.1	III	29.66	2171	3263	3375	2464	**SK 9032.1 - 100L/4**	168	508
	48	3954	2.5	III	35.61	2248	3263	3375	2540	SK 9032.1 - 100LH/4		
	45	4225	2.7	III	38.05	2286	3263	3375	2576			
	42	4481	3.1	III	40.36	2311	3263	3375	2610			
	36	5296	2.6	III	47.7	2376	3263	3375	2669			
	34	5545	2.5	III	49.94	2381	3263	3375	2678			
	29	6570	2.1	III	59.17	2450	3263	3375	2747			
	27	7115	1.9	II	64.08	2459	3263	3375	2756			
	22	8429	1.6	II	75.91	2502	3263	3375	2810			
	20	9346	1.5	II	84.17	2513	3263	3375	2833			
	18	10382	1.3	I	93.5	2504	3263	3375	2815			
	15	12300	1.1	I	110.77	2185	3263	3375	2833			
	11	17626	0.8	*	158.74		3263	2828	2678			
	31	6184	3.8	III	55.69	6271	9000	6300	4448	**SK 9042.1 - 100L/4**	271	516
	27	7023	3.3	III	63.25	6246	9000	6300	4550	SK 9042.1 - 100LH/4		
	25	7618	3.3	III	68.61	6228	9000	6300	4644			
	22	8459	2.9	III	76.18	6197	9000	6300	4727			
	20	9597	2.6	III	86.43	6152	9000	6300	4835			
	18	10611	2.3	III	95.56	6107	9000	6300	4914			
	14	13079	1.6	II	117.79	5974	9000	6300	5058			
	13	14745	1.7	II	132.79	5868	9000	6300	5090			
	11	17759	1.4	II	159.94	5636	9000	6300	5213			
	8.7	21666	1.1	I	195.12	5249	9000	6300	5204			
	7.3	26095	0.9	*	235.01	4669	9000	6300	5263			
	17	11370	3.1	III	102.4	8550	10125	8550	8179	**SK 9052.1 - 100L/4**	437	524
	14	13328	3.1	III	120.03	8498	10125	8550	8501	SK 9052.1 - 100LH/4		
	12	16118	2.0	III	145.16	8397	10125	8550	8890			
	10	18792	2.3	III	169.24	8280	10125	8550	9194			
	8.6	22028	1.9	II	198.38	8111	10125	8550	9509			
	6.9	27433	1.5	II	247.06	7758	10125	8550	9914			
	5.9	32158	1.3	I	289.61	7369	10125	8550	10125			
	8.2	22967	3.3	III	206.84	14546	11250	14850	11250	**SK 9072.1 - 100L/4**	745	532
	6.9	27289	2.8	III	245.76	14436	11250	14850	11250	SK 9072.1 - 100LH/4		
	5.5	34544	2.2	III	311.1	14202	11250	14850	11250	**SK 9072.1/32 - 100L/4**	820	552
	4.4	42847	1.8	II	385.88	13865	11250	14850	11250	SK 9072.1/32 - 100LH/4		
	3.6	52545	1.4	II	473.22	13361	11250	14850	11250			
	2.8	66430	1.1	I	598.27	12411	11250	14850	11250			
	2.2	85227	0.9	*	767.55	10573	11250	14850	11250			

(AGMA Class I = f_B 1.0 - 1.39 II = f_B 1.4 - 1.99 III = f_B ≥ 2.0 * = f_B < 1.0) **(Model Type in blue is an Energy Efficient motor)**

Send Quote Requests to info@automatedpt.com
Call +1(800)985-6929 To Order or Order Online At Nordgearmotors.com

DRIVESYSTEMS

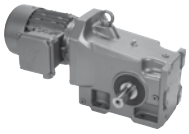



3.0 hp, 5.0 hp Gearmotors

Motor Power P_n [hp]	Output Speed n_2 [rpm]	Output Torque T_2 [lb-in]	Service Factor f_B	AGMA Class	Gear Ratio i_{tot}	Standard Bearings F_{RN} OHL [lb]	Standard Bearings F_{AN} Thrust [lb]	Heavy Duty Bearings (VL) F_{RVL} OHL [lb]	Heavy Duty Bearings (VL) F_{AVL} Thrust [lb]	Model Type	Weight [lb]	Dim. Page
3.0	6	31651	3.6	III	285.05	21375	13500	21375	13500	**SK 9082.1/42 - 100L/4**	1431	552
	4.5	42149	2.7	III	379.59	21375	13500	21375	13500	SK 9082.1/42 - 100LH/4		
	3.8	49235	2.3	III	443.41	21260	13500	21375	13500			
	2.8	66997	1.7	II	603.37	20804	13500	21375	13500			
	2.4	78224	1.5	II	704.48	20437	13500	21375	13500			
	2	93869	1.2	I	845.38	19814	13500	21375	13500			
	1.7	113011	1.0	I	1017.77	18862	13500	21375	13500			
	2.4	79298	2.2	III	714.15	26566	14625	27000	14625	**SK 9086.1/52 - 100L/4**	2037	552
	1.9	100809	1.8	II	907.88	25880	14625	27000	14625	SK 9086.1/52 - 100LH/4		
	1.4	133487	1.3	I	1202.18	24464	14625	27000	14625			
	1.2	162492	1.1	I	1463.4	22772	14625	27000	14625			
	0.95	198319	0.9	*	1786.05	19958	14625	27000	14625			
	2.8	67524	4.2	III	608.12	35267	15750	36000	15750	**SK 9092.1/52 - 100L/4**	3294	552
	2.4	78437	3.6	III	706.4	35118	15750	36000	15750	SK 9092.1/52 - 100LH/4		
	2	93982	3.0	III	846.4	34868	15750	36000	15750			
	1.5	124362	2.3	III	1120	34238	15750	36000	15750			
	1.2	158206	1.8	II	1424.8	33309	15750	36000	15750			
	0.95	199353	1.4	II	1795.36	31824	15750	36000	15750			
	1.3	150329	2.9	III	1353.86	49500	22500			**SK 9096.1/62 - 100L/4**	4154	553
	1.1	180289	2.5	III	1623.67	49500	22500			SK 9096.1/62 - 100LH/4		
	0.96	197004	2.2	III	1774.21	49500	22500			**SK 9096.1/63 - 100L/4**	4174	553
	0.83	227860	1.9	II	2052.10	49500	22500			SK 9096.1/63 - 100LH/4		
	0.74	257193	1.7	II	2316.27	49500	22500					
	0.64	297477	1.5	II	2679.06	49500	22500					
	0.53	356444	1.2	I	3210.12	49500	22500					
	0.46	410004	1.1	I	3692.48	49500	22500					
	0.38	493165	0.9	*	4441.42	49500	22500					
5.0	325	968	1.3	I	5.3	891	1159			**SK 92372 - 100LA/4**	82	472
	289	1091	1.3	I	5.97	911	1195			SK 92372 - 112MH/4		
	266	1186	1.2	I	6.49	925	1195					
	236	1338	1.1	I	7.32	938	1231					
	208	1515	1.0	I	8.29	900	1242					
	182	1731	0.9	*	9.47	842	1258					
	159	1981	0.8	*	10.84	758	1258					
	151	2082	0.8	*	11.39	718	1231					
	291	1082	2.1	III	5.92	1249	1679			**SK 92672 - 100LA/4**	118	476
	254	1239	2.0	III	6.78	1289	1744			SK 92672 - 112MH/4		
	223	1413	1.9	II	7.73	1321	1791					
	198	1592	1.8	II	8.71	1301	1836					
	176	1787	1.6	II	9.78	1276	1872					
	157	2014	1.5	II	11.02	1242	1940					
	136	2310	1.3	I	12.64	1188	1978					
	123	2573	1.2	I	14.08	1134	1996					

(AGMA Class I = f_B 1.0 - 1.39 II = f_B 1.4 - 1.99 III = f_B ≥ 2.0 * = f_B < 1.0) **(Model Type in blue is an Energy Efficient motor)**

Send Quote Requests to info@automatedpt.com
Call +1(800)985-6929 To Order or Order Online At Nordgearmotors.com

5.0 hp Gearmotors



DRIVESYSTEMS

Motor Power P_n [hp]	Output Speed n_2 [rpm]	Output Torque T_2 [lb-in]	Service Factor f_B	AGMA Class	Gear Ratio i_{tot}	Standard Bearings F_{RN} OHL [lb]	Standard Bearings F_{AN} Thrust [lb]	Heavy Duty Bearings (VL) F_{RVL} OHL [lb]	Heavy Duty Bearings (VL) F_{AVL} Thrust [lb]	Model Type	Weight [lb]	Dim. Page
5.0	107	2939	1.1	I	16.08	1042	2140			SK 92672 - 100LA/4	118	476
	95	3304	0.9	*	18.08	927	1971			SK 92672 - 112MH/4		
	85	3723	0.8	*	20.37	752	2012					
	74	4255	0.8	*	23.28	380	2142					
	213	1478	1.1	I	8.09	1562	2781	2025	2781	SK 9012.1 - 100LA/4	112	484
	187	1687	1.0	I	9.23	1539	2849	2025	2849	SK 9012.1 - 112MH/4		
	159	1983	0.9	*	10.85	1501	2927	2025	2927			
	141	2235	0.9	*	12.23	1460	2979	2025	2979			
	113	2796	1.2	I	15.3	1352	3173	2025	3173			
	99	3189	1.1	I	17.45	1253	3224	2005	3224			
	83	3814	0.9	*	20.87	1046	3319	1881	3319			
	70	4483	0.8	*	24.53	700	3350	1712	3350			
	138	2286	1.8	II	12.51	2025	3047	2025	3047	SK 9016.1 - 100LA/4	115	492
	114	2760	1.7	II	15.1	2025	3161	2025	3161	SK 9016.1 - 112MH/4		
	99	3189	1.5	II	17.45	2025	3224	2025	3224			
	84	3748	1.4	II	20.51	1967	3285	2025	3285			
	75	4223	1.1	I	23.11	1888	3319	2025	3319			
	66	4805	1.1	I	26.29	1773	3335	2025	3335			
	57	5578	1.0	I	30.52	1582	3350	2025	3350			
	50	6362	0.8	*	34.81	1325	3328	2025	3328			
	269	1171	2.1	III	6.41	1289	1823			SK 92772 - 100LA/4	134	480
	227	1389	2.0	III	7.6	1341	1913			SK 92772 - 112MH/4		
	202	1563	1.9	II	8.55	1382	1973					
	179	1760	1.9	II	9.63	1418	2052					
	159	1988	1.8	II	10.88	1456	2115					
	139	2272	1.8	II	12.43	1499	2180					
	124	2542	1.7	II	13.91	1528	2230					
	111	2851	1.5	II	15.6	1555	2259					
	97	3258	1.5	II	17.83	1589	2318					
	87	3606	1.5	II	19.73	1600	2318					
	78	4061	1.4	II	22.22	1523	2345					
	68	4640	1.2	I	25.39	1402	2390					
	61	5198	1.0	I	28.44	1258	2318					
	54	5855	1.0	I	32.04	1037	2318					
	47	6691	0.9	*	36.61	590	2300					
	155	2034	1.8	II	11.13	1393	2205	2700	1766	SK 9022.1 - 100LA/4	130	500
	138	2286	1.7	II	12.51	1422	2273	2700	1805	SK 9022.1 - 112MH/4		
	118	2661	1.6	II	14.56	1456	2345	2700	1845			
	106	2979	1.5	II	16.3	1476	2396	2700	1879			
	98	3202	2.0	III	17.52	1485	2439	2700	1897			
	87	3642	1.8	II	19.93	1559	2592	2700	1973			
	77	4096	1.7	II	22.41	1577	2630	2700	1996			
	70	4488	1.5	II	24.56	1573	2626	2651	1996			
	66	4764	1.6	II	26.07	1591	2682	2615	2021			
	59	5336	1.4	II	29.2	1526	2700	2529	2034			

(AGMA Class I = f_B 1.0 - 1.39 II = f_B 1.4 - 1.99 III = f_B ≥ 2.0 * = f_B < 1.0) **(Model Type in blue is an Energy Efficient motor)**

Send Quote Requests to info@automatedpt.com
Call +1(800)985-6929 To Order or Order Online At Nordgearmotors.com

DRIVESYSTEMS

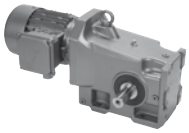



5.0 hp Gearmotors

Motor Power P_n [hp]	Output Speed n_2 [rpm]	Output Torque T_2 [lb-in]	Service Factor f_B	AGMA Class	Gear Ratio i_{tot}	Standard Bearings $F_{R\,N}$ OHL [lb]	Standard Bearings $F_{A\,N}$ Thrust [lb]	Heavy Duty Bearings (VL) $F_{R\,VL}$ OHL [lb]	Heavy Duty Bearings (VL) $F_{A\,VL}$ Thrust [lb]	Model Type	Weight [lb]	Dim. Page
5.0	55	5735	1.3	I	31.38	1411	2700	2459	2041	**SK 9022.1 - 100LA/4**	130	500
	52	6078	1.0	I	33.26	1296	2673	2396	2018	SK 9022.1 - 112MH/4		
	43	7268	1.0	I	39.77	684	2700	2129	2034			
	39	8171	0.9	*	44.71	-	2673	1861	2018			
	35	8957	0.8	*	49.01	-	2567	1559	1960			
	33	9507	0.8	*	52.02	-	2597	1285	1980			
	203	1550	5.1	III	8.48	1472	2174	3375	1742	**SK 9032.1 - 100LA/4**	174	508
	161	1961	4.0	III	10.73	1559	2333	3375	1832	SK 9032.1 - 112MH/4		
	136	2317	3.9	III	12.68	1613	2455	3375	1895			
	128	2465	4.9	III	13.49	1667	2556	3375	1946			
	108	2932	4.2	III	16.04	1732	2684	3375	2015			
	101	3121	4.1	III	17.08	1746	2720	3375	2036			
	85	3697	3.5	III	20.23	1809	2860	3375	2102			
	72	4370	3.1	III	23.91	1856	2977	3375	2153			
	69	4574	3.0	III	25.03	1863	2977	3375	2160			
	58	5420	2.5	III	29.66	1908	3103	3375	2212			
	48	6508	2.1	III	35.61	1924	3164	3375	2241			
	45	6954	2.0	III	38.05	1944	3200	3375	2266			
	43	7376	1.9	II	40.36	1949	3231	3375	2266			
	36	8717	1.6	II	47.7	1944	3263	3375	2273			
	35	9127	1.5	II	49.94	1922	3231	3375	2266			
	29	10814	1.3	I	59.17	1906	3231	3375	2255			
	27	11711	1.2	I	64.08	1865	3164	3375	2219			
	23	13873	1.0	I	75.91	1694	3103	3375	2180			
	20	15382	0.9	*	84.17	907	3011	3375	2133			
	18	17087	0.8	*	93.5	-	2833	2977	2045			
	50	6285	2.1	III	34.39	6269	9000	6300	3753	**SK 9042.1 - 100LA/4**	278	516
	43	7409	2.5	III	40.54	6235	9000	6300	3857	SK 9042.1 - 112MH/4		
	36	8712	2.4	III	47.67	6188	9000	6300	3958			
	31	10178	2.3	III	55.69	6127	9000	6300	4046			
	27	11559	2.0	III	63.25	6059	9000	6300	4079			
	25	12539	2.0	III	68.61	6005	9000	6300	4151			
	23	13922	1.8	II	76.18	5922	9000	6300	4185			
	20	15795	1.6	II	86.43	5794	9000	6300	4219			
	18	17464	1.4	II	95.56	5661	9000	6300	4239			
	15	21527	1.0	I	117.79	5265	9000	6300	4226			
	13	24268	1.0	I	132.79	4930	9000	6300	4120			
	11	29230	0.8	*	159.94	4131	9000	6300	4086			
	28	11407	2.5	III	62.42	8550	10125	8550	6935	**SK 9052.1 - 100LA/4**	443	524
	24	13202	2.4	III	72.24	8503	10125	8550	7171	SK 9052.1 - 112MH/4		
	20	16113	2.2	III	88.17	8397	10125	8550	7502			
	17	18714	1.9	II	102.4	8282	10125	8550	7733			
	14	21936	1.9	II	120.03	8116	10125	8550	7972			
	12	26529	1.2	I	145.16	7823	10125	8550	8258			
	10	30929	1.4	II	169.24	7477	10125	8550	8431			
	8.7	36255	1.2	I	198.38	6959	10125	8550	8651			

(AGMA Class I = f_B 1.0 - 1.39 II = f_B 1.4 - 1.99 III = f_B ≥ 2.0 * = f_B < 1.0) **(Model Type in blue is an Energy Efficient motor)**

Send Quote Requests to info@automatedpt.com
Call +1(800)985-6929 To Order or Order Online At Nordgearmotors.com

5.0 hp Gearmotors



DRIVESYSTEMS

Motor Power P_n [hp]	Output Speed n_2 [rpm]	Output Torque T_2 [lb-in]	Service Factor f_B	AGMA Class	Gear Ratio i_{tot}	Standard Bearings F_{RN} OHL [lb]	Standard Bearings F_{AN} Thrust [lb]	Heavy Duty Bearings (VL) F_{RVL} OHL [lb]	Heavy Duty Bearings (VL) F_{AVL} Thrust [lb]	Model Type	Weight [lb]	Dim. Page
5.0	7	45151	0.9	*	247.06	5769	10125	8550	8834	**SK 9052.1 - 100LA/4**	443	524
	6	52927	0.8	*	289.61	4160	10125	8550	9005	SK 9052.1 - 112MH/4		
	16	20136	2.3	III	110.18	14609	11250	14850	9916	**SK 9072.1 - 100LA/4**	752	532
	13	25015	2.4	III	136.88	14497	11250	14850	10287	SK 9072.1 - 112MH/4		
	8.3	37801	2.0	III	206.84	14081	11250	14850	11250			
	7	44914	1.7	II	245.76	13766	11250	14850	11250			
	5.5	56855	1.3	I	311.1	13095	11250	14850	11250	**SK 9072.1/32 - 100LA/4**	827	552
	4.5	70521	1.1	I	385.88	12071	11250	14850	11250	SK 9072.1/32 - 112MH/4		
	3.6	86483	0.9	*	473.22	10420	11250	14850	11250			
	14	22502	2.9	III	123.13	21375	13500	21375	13500	**SK 9082.1/52 - 100LA/4**	1493	552
	12	26717	2.9	III	146.19	21375	13500	21375	13500	SK 9082.1/52 - 112MH/4		
	9.5	33278	2.9	III	182.09	21375	13500	21375	13500			
	7	44888	2.6	III	245.62	21350	13500	21375	13500			
	4.6	69107	2.6	III	378.14	26829	14625	27000	14625	**SK 9086.1/52 - 100LA/4**	2044	552
	4	79196	2.2	III	433.35	26568	14625	27000	14625	SK 9086.1/52 - 112MH/4		
	2.8	113885	1.6	II	623.16	25369	14625	27000	14625			
	2.4	130514	1.4	II	714.15	24613	14625	27000	14625			
	1.9	165919	1.1	I	907.88	22543	14625	27000	14625			
	1.4	219703	0.8	*	1202.18	17753	14625	27000	14625			
	3.9	80678	2.5	III	441.46	35087	15750	36000	15750	**SK 9092.1/52 - 100LA/4**	3301	552
	2.8	111136	2.5	III	608.12	34535	15750	36000	15750	SK 9092.1/52 - 112MH/4		
	2.4	129097	2.2	III	706.4	34121	15750	36000	15750			
	2	154683	1.8	II	846.4	33417	15750	36000	15750			
	1.5	204684	1.4	II	1120	31601	15750	36000	15750			
	1.2	260388	1.1	I	1424.8	28787	15750	36000	15750			
	0.96	328109	0.9	*	1795.36	23812	15750	36000	15750			
	2.1	149231	3.0	III	816.57	49500	22500			**SK 9096.1/62 - 100 LA/4**	4161	553
	1.8	178973	2.5	III	979.31	49500	22500			SK 9096.1/62 - 112MH/4		
	1.5	212948	2.1	III	1165.22	49500	22500					
	1.3	247423	1.8	II	1353.86	49500	22500					
	1.1	296732	1.5	II	1623.67	49500	22500					
	0.96	197004	2.2	III	1774.21	49500	22500			**SK 9096.1/63 - 100LA/4**	4174	553
	0.83	227860	1.9	II	2052.10	49500	22500			SK 9096.1/63 - 112MH/4		
	0.74	257193	1.7	II	2316.27	49500	22500					
	0.64	297477	1.5	II	2679.06	49500	22500					
	0.53	356444	1.2	I	3210.12	49500	22500					
	0.46	410004	1.1	I	3692.48	49500	22500					
	0.38	493165	0.9	*	4441.42	49500	22500					

(AGMA Class I = f_B 1.0 - 1.39 II = f_B 1.4 - 1.99 III = f_B ≥ 2.0 * = f_B < 1.0) **(Model Type in blue is an Energy Efficient motor)**

Send Quote Requests to info@automatedpt.com
Call +1(800)985-6929 To Order or Order Online At Nordgearmotors.com

DRIVESYSTEMS

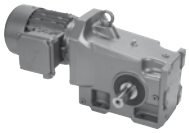



7.5 hp Gearmotors

Motor Power P_n [hp]	Output Speed n_2 [rpm]	Output Torque T_2 [lb-in]	Service Factor f_B	AGMA Class	Gear Ratio i_{tot}	Standard Bearings $F_{R\,N}$ OHL [lb]	Standard Bearings $F_{A\,N}$ Thrust [lb]	Heavy Duty Bearings (VL) $F_{R\,VL}$ OHL [lb]	Heavy Duty Bearings (VL) $F_{A\,VL}$ Thrust [lb]	Model Type	Weight [lb]	Dim. Page
7.5	358	1321	1.8	II	4.85	1116	1395			SK 92672 - 132S/4	169	476
	318	1487	1.6	II	5.46	1143	1445			SK 92672 - 132SH/4		
	293	1612	1.5	II	5.92	1159	1440					
	256	1846	1.4	II	6.78	1184	1467					
	224	2105	1.3	I	7.73	1206	1472					
	199	2372	1.2	I	8.71	1177	1483					
	177	2663	1.1	I	9.78	1114	1469					
	157	3001	1.0	I	11.02	1024	1501					
	137	3442	0.9	*	12.64	875	1472					
	123	3834	0.8	*	14.08	695	1440					
	361	1310	2.8	III	4.81	1132	1512			SK 92772 - 132S/4	184	480
	320	1479	2.5	III	5.43	1166	1559			SK 92772 - 132SH/4		
	284	1664	2.2	III	6.11	1195	1607					
	271	1745	2.3	III	6.41	1202	1613					
	228	2070	2.0	III	7.6	1242	1665					
	203	2328	1.9	II	8.55	1271	1694					
	180	2622	1.7	II	9.63	1294	1733					
	159	2963	1.5	II	10.88	1314	1762					
	140	3385	1.3	I	12.43	1334	1782					
	125	3788	1.3	I	13.91	1348	1784					
	111	4248	1.0	I	15.6	1350	1762					
	97	4855	1.0	I	17.83	1350	1744					
	88	5373	1.0	I	19.73	1206	1658					
	78	6051	0.9	*	22.22	956	1627					
	68	6914	0.8	*	25.39	367	1559					
	205	2309	3.4	III	8.48	1370	1971	3375	1643	SK 9032.1 - 132S/4	225	508
	162	2922	2.7	III	10.73	1424	2088	3375	1706	SK 9032.1 - 132SH/4		
	137	3453	2.6	III	12.68	1458	2153	3375	1744			
	129	3673	3.3	III	13.49	1517	2264	3375	1805			
	108	4377	2.9	III	16.04	1554	2344	3375	1854			
	102	4651	2.8	III	17.08	1557	2358	3375	1859			
	86	5509	2.4	III	20.23	1586	2432	3375	1890			
	73	6511	2.1	III	23.91	1591	2455	3375	1908			
	69	6816	1.9	II	25.03	1577	2439	3375	1906			
	58	8077	1.6	II	29.66	1577	2455	3375	1908			
	49	9697	1.0	I	35.61	1512	2383	3375	1870			
	46	10361	1.1	I	38.05	1508	2383	3375	1870			
	43	10990	1.2	I	40.36	1481	2358	3375	1854			
	36	12989	1.1	I	47.7	1382	2219	3375	1793			
	35	13599	1.0	I	49.94	1323	2129	3375	1742			
	29	16112	0.9	*	59.17		1964	3220	1656			
	27	17449	0.8	*	64.08		1773	2878	1559			

(AGMA Class I = f_B 1.0 - 1.39 II = f_B 1.4 - 1.99 III = f_B ≥ 2.0 * = f_B < 1.0) **(Model Type in blue is an Energy Efficient motor)**

Send Quote Requests to info@automatedpt.com
Call +1(800)985-6929 To Order or Order Online At Nordgearmotors.com

7.5 hp Gearmotors



DRIVESYSTEMS

Motor Power P_n [hp]	Output Speed n_2 [rpm]	Output Torque T_2 [lb-in]	Service Factor f_B	AGMA Class	Gear Ratio i_{tot}	Standard Bearings F_{RN} OHL [lb]	Standard Bearings F_{AN} Thrust [lb]	Heavy Duty Bearings (VL) F_{RVL} OHL [lb]	Heavy Duty Bearings (VL) F_{AVL} Thrust [lb]	Model Type	Weight [lb]	Dim. Page
7.5	129	3649	3.5	III	13.4	5225	7211	6300	2880	**SK 9042.1 - 132S/4**	329	516
	111	4264	3.2	III	15.66	5438	7459	6300	2975	SK 9042.1 - 132SH/4		
	95	4956	3.9	III	18.2	5695	7814	6300	3112			
	85	5533	3.7	III	20.32	5839	8003	6300	3177			
	73	6505	3.5	III	23.89	6073	8305	6300	3265			
	62	7600	3.2	III	27.91	6228	8561	6300	3355			
	55	8632	1.3	I	31.7	6192	8741	6300	3382			
	50	9365	2.6	III	34.39	6163	8926	6300	3443			
	43	11039	2.2	III	40.54	6086	9000	6300	3497			
	36	12981	1.9	II	47.67	5981	9000	6300	3542			
	31	15165	1.6	II	55.69	5839	9000	6300	3566			
	27	17223	1.3	I	63.25	5681	9000	6300	3503			
	25	18683	1.3	I	68.61	5553	9000	6300	3542			
	23	20744	1.2	I	76.18	5351	9000	6300	3515			
	20	23536	1.1	I	86.43	5027	9000	6300	3458			
	18	26022	1.0	I	95.56	4680	9000	6300	3398			
	55	8518	3.6	III	31.28	8550	10125	8550	5666	**SK 9052.1 - 132S/4**	494	524
	48	9860	3.4	III	36.21	8550	10125	8550	5879	SK 9052.1 - 132SH/4		
	44	10816	3.9	III	39.72	8550	10125	8550	6003			
	39	12243	3.5	III	44.96	8532	10125	8550	6167			
	32	14857	2.9	III	54.56	8444	10125	8550	6419			
	28	16997	2.5	III	62.42	8361	10125	8550	6597			
	24	19671	2.2	III	72.24	8237	10125	8550	6779			
	20	24009	1.8	II	88.17	7992	10125	8550	7022			
	17	27884	1.3	I	102.4	7724	10125	8550	7160			
	14	32685	1.3	I	120.03	7319	10125	8550	7358			
	10	46085	0.9	*	169.24	5612	10125	8550	7524			
	8.7	54020	0.8	*	198.38	3854	10125	8550	7610			
	25	19121	3.9	III	70.22	14630	11250	14850	8568	**SK 9072.1 - 132S/4**	803	532
	22	21700	3.5	III	79.69	14576	11250	14850	8807	SK 9072.1 - 132SH/4		
	19	24908	3.0	III	91.47	14499	11250	14850	9079			
	16	30003	2.5	III	110.18	14355	11250	14850	9419			
	13	37273	1.6	II	136.88	14101	11250	14850	9619			
	11	42826	1.8	II	157.27	13865	11250	14850	9963			
	9.3	50883	1.5	II	186.86	13455	11250	14850	10287			
	8.4	56324	1.3	I	206.84	13129	11250	14850	10337			
	7.1	66922	1.1	I	245.76	12371	11250	14850	10604			
	15	31710	3.6	III	116.45	21375	13500	21375	13500	**SK 9082.1 - 132S/4**	1376	536
	14	33347	3.5	III	122.46	21375	13500	21375	13500	SK 9082.1 - 132SH/4		
	12	40508	2.8	III	148.76	21375	13500	21375	13500			
	7.1	66530	1.7	II	244.32	20817	13500	21375	13500			
	5.8	80821	1.4	II	296.8	20342	13500	21375	13500			

(AGMA Class I = f_B 1.0 - 1.39 II = f_B 1.4 - 1.99 III = f_B ≥ 2.0 * = f_B < 1.0) **(Model Type in blue is an Energy Efficient motor)**

Send Quote Requests to info@automatedpt.com
Call +1(800)985-6929 To Order or Order Online At Nordgearmotors.com

NORD DRIVESYSTEMS

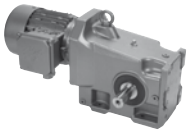



7.5 hp, 10 hp Gearmotors

Motor Power P_n [hp]	Output Speed n_2 [rpm]	Output Torque T_2 [lb-in]	Service Factor f_B	AGMA Class	Gear Ratio i_{tot}	Standard Bearings $F_{R\,N}$ OHL [lb]	Standard Bearings $F_{A\,N}$ Thrust [lb]	Heavy Duty Bearings (VL) $F_{R\,VL}$ OHL [lb]	Heavy Duty Bearings (VL) $F_{A\,VL}$ Thrust [lb]	Model Type	Weight [lb]	Dim. Page
7.5	6.1	77621	1.5	II	285.05	20457	13500	21375	13500	**SK 9082.1/42 - 132S/4**	1488	552
	4.6	103365	1.1	I	379.59	19368	13500	21375	13500	SK 9082.1/42 - 132SH/4		
	3.9	120744	1.0	I	443.41	18410	13500	21375	13500			
	8.9	52838	3.3	III	194.04	27000	14625	27000	14625	**SK 9086.1 - 132S/4**	1927	540
	7.5	62805	2.8	III	230.64	26973	14625	27000	14625	SK 9086.1 - 132SH/4		
	6.4	73651	2.4	III	270.47	26717	14625	27000	14625	**SK 9086.1/52 - 132S/4**	2095	552
	4.6	102970	1.7	II	378.14	25799	14625	27000	14625	SK 9086.1/52 - 132SH/4		
	4	118004	1.5	II	433.35	25193	14625	27000	14625			
	2.8	169691	1.0	I	623.16	22280	14625	27000	14625			
	2.4	194468	0.9	*	714.15	20309	14625	27000	14625			
	6.2	76453	3.7	III	280.76	35147	15750	36000	15750	**SK 9092.1/52 - 132S/4**	3352	552
	4.5	105021	2.7	III	385.67	34661	15750	36000	15750	SK 9092.1/52 - 132SH/4		
	3.9	120213	2.4	III	441.46	34335	15750	36000	15750			
	2.9	165595	1.7	II	608.12	33071	15750	36000	15750			
	2.5	192358	1.5	II	706.4	32108	15750	36000	15750			
	2	230481	1.2	I	846.4	30413	15750	36000	15750			
	1.5	304984	0.9	*	1120	25751	15750	36000	15750			
	3.2	146591	3.0	III	538.33	49500	22500			**SK 9096.1/62 - 132S/4**	4212	553
	2.9	165462	2.7	III	607.63	49500	22500			SK 9096.1/62 - 132SH/4		
	2.5	191377	2.3	III	702.80	49500	22500					
	2.1	222358	2.0	III	816.57	49500	22500					
	1.8	266673	1.7	II	979.31	49500	22500					
	1.5	317298	1.4	II	1165.22	49500	22500					
	1.3	368666	1.2	I	1353.86	49500	22500					
10	205	3080	2.5	III	8.48	1269	1784	3375	1544	**SK 9032.1 - 132M/4**	249	508
	162	3899	2.0	III	10.73	1294	1850	3375	1582	SK 9032.1 - 132MH/4		
	137	4608	1.9	II	12.68	1298	1868	3375	1602			
	129	4902	2.4	III	13.49	1366	1985	3375	1665			
	108	5836	2.2	III	16.04	1382	2025	3375	1688			
	102	6207	2.1	III	17.08	1361	2003	3375	1679			
	86	7352	1.8	II	20.23	1352	2007	3375	1688			
	73	8689	1.6	II	23.91	1319	1964	3375	1663			
	69	9096	1.5	II	25.03	1280	1924	3375	1638			
	58	10778	1.2	I	29.66	1222	1850	3375	1604			
	49	12941	0.8	*	35.61	1080	1636	3375	1501			
	46	13827	0.8	*	38.05	1040	1602	3375	1481			
	43	14667	0.9	*	40.36	986	1523	3375	1449			
	36	17334	0.8	*	47.7		1231	2909	1298			
	35	18148	0.8	*	49.94		1089	2671	1233			

(AGMA Class I = f_B 1.0 - 1.39 II = f_B 1.4 - 1.99 III = f_B ≥ 2.0 * = f_B < 1.0) **(Model Type in blue is an Energy Efficient motor)**

Send Quote Requests to info@automatedpt.com
Call +1(800)985-6929 To Order or Order Online At Nordgearmotors.com

10 hp Gearmotors



DRIVESYSTEMS

Motor Power P_n [hp]	Output Speed n_2 [rpm]	Output Torque T_2 [lb-in]	Service Factor f_B	AGMA Class	Gear Ratio i_{tot}	Standard Bearings F_{RN} OHL [lb]	Standard Bearings F_{AN} Thrust [lb]	Heavy Duty Bearings (VL) F_{RVL} OHL [lb]	Heavy Duty Bearings (VL) F_{AVL} Thrust [lb]	Model Type	Weight [lb]	Dim. Page
10	196	3209	3.0	III	8.83	4608	6354	6300	2549	**SK 9042.1 - 132M/4**	353	516
	185	3412	3.0	III	9.39	4680	6446	6300	2579	SK 9042.1 - 132MH/4		
	170	3710	2.9	III	10.21	4784	6581	6300	2621			
	152	4143	2.7	III	11.4	4919	6732	6300	2675			
	129	4870	2.6	III	13.4	5108	6995	6300	2754			
	111	5691	2.4	III	15.66	5301	7211	6300	2826			
	95	6614	2.9	III	18.2	5549	7531	6300	2950			
	85	7384	2.7	III	20.32	5690	7702	6300	3004			
	73	8682	2.6	III	23.89	5888	7940	6300	3062			
	62	10143	2.4	III	27.91	6080	8147	6300	3101			
	55	11520	1.0	I	31.7	6062	8251	6300	3096			
	50	12497	2.0	III	34.39	6008	8399	6300	3141			
	43	14732	1.7	II	40.54	5868	8561	6300	3146			
	36	17323	1.4	II	47.67	5672	8685	6300	3125			
	31	20238	1.2	I	55.69	5402	8771	6300	3071			
	27	22985	1.0	I	63.25	5094	8685	6300	2941			
	25	24933	1.0	I	68.61	4838	8784	6300	2941			
	23	27684	0.9	*	76.18	4412	8757	6300	2853			
	20	31409	0.8	*	86.43	3670	8658	6300	2711			
	55	11367	2.7	III	31.28	8550	10125	8550	5504	**SK 9052.1 - 132M/4**	518	524
	48	13159	2.6	III	36.21	8505	10125	8550	5675	SK 9052.1 - 132MH/4		
	44	14434	2.9	III	39.72	8460	10125	8550	5785			
	39	16339	2.6	III	44.96	8388	10125	8550	5924			
	32	19827	2.1	III	54.56	8228	10125	8550	6138			
	28	22683	1.9	II	62.42	8073	10125	8550	6269			
	24	26252	1.6	II	72.24	7844	10125	8550	6399			
	20	32041	1.3	I	88.17	7380	10125	8550	6577			
	17	37212	0.9	*	102.4	6854	10125	8550	6617			
	14	43619	0.9	*	120.03	6010	10125	8550	6714			
	30	21237	3.3	III	58.44	14585	11250	14850	7961	**SK 9072.1 - 132M/4**	827	532
	25	25518	2.9	III	70.22	14483	11250	14850	8260	SK 9072.1 - 132MH/4		
	22	28959	2.6	III	79.69	14387	11250	14850	8460			
	19	33240	2.3	III	91.47	14249	11250	14850	8681			
	16	40040	1.9	II	110.18	13988	11250	14850	8948			
	11	57152	1.3	I	157.27	13077	11250	14850	9254			
	9.3	67905	1.1	I	186.86	12292	11250	14850	9464			
	18	34836	3.3	III	95.86	21375	13500	21375	13500	**SK 9082.1 - 132M/4**	1400	536
	15	42318	2.7	III	116.45	21375	13500	21375	13500	SK 9082.1 - 132MH/4		
	14	44502	2.6	III	122.46	21357	13500	21375	13500			
	12	54060	2.1	III	148.76	21152	13500	21375	13500			
	7.1	88786	1.3	I	244.32	20030	13500	21375	13500			
	5.8	107857	1.0	I	296.8	19141	13500	21375	13500			
	8.9	70514	2.5	III	194.04	26795	14625	27000	14625	**SK 9086.1 - 132M/4**	1951	540
	7.5	83815	2.1	III	230.64	26438	14625	27000	14625	SK 9086.1 - 132MH/4		

(AGMA Class I = f_B 1.0 - 1.39 II = f_B 1.4 - 1.99 III = f_B ≥ 2.0 * = f_B < 1.0) **(Model Type in blue is an Energy Efficient motor)**

Send Quote Requests to info@automatedpt.com
Call +1(800)985-6929 To Order or Order Online At Nordgearmotors.com

DRIVESYSTEMS

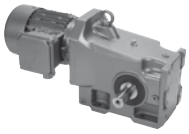



10 hp, 15 hp Gearmotors

Motor Power P_n [hp]	Output Speed n_2 [rpm]	Output Torque T_2 [lb-in]	Service Factor f_B	AGMA Class	Gear Ratio i_{tot}	Standard Bearings F_{RN} OHL [lb]	Standard Bearings F_{AN} Thrust [lb]	Heavy Duty Bearings (VL) F_{RVL} OHL [lb]	Heavy Duty Bearings (VL) F_{AVL} Thrust [lb]	Model Type	Weight [lb]	Dim. Page
10	6.4	98289	1.8	II	270.47	25970	14625	27000	14625	**SK 9086.1/52 - 132M/4**	2119	552
	4.6	137416	1.3	I	378.14	24260	14625	27000	14625	SK 9086.1/52 - 132MH/4		
	4	157480	1.1	I	433.35	23099	14625	27000	14625			
	2.8	226457	0.8	*	623.16	16945	14625	27000	14625			
	6.2	102028	2.8	III	280.76	34720	15750	36000	15750	**SK 9092.1/52 - 132M/4**	3376	552
	4.5	140153	2.0	III	385.67	33836	15750	36000	15750	SK 9092.1/52 - 132MH/4		
	3.9	160427	1.8	II	441.46	33239	15750	36000	15750			
	2.9	220991	1.3	I	608.12	30872	15750	36000	15750			
	2.5	256706	1.1	I	706.4	29003	15750	36000	15750			
	2	307583	0.9	*	846.4	25547	15750	36000	15750			
	4.0	156626	2.8	III	431.00	49500	22500			**SK 9096.1/62 - 132M/4**	4236	553
	3.7	172332	2.6	III	474.22	49500	22500			SK 9096.1/62 - 132MH/4		
	3.2	195630	2.3	III	538.33	49500	22500					
	2.9	220813	2.0	III	607.63	49500	22500					
	2.5	255398	1.7	II	702.80	49500	22500					
	2.1	296742	1.5	II	816.57	49500	22500					
	1.8	355882	1.2	I	979.31	49500	22500					
	1.5	423442	1.0	I	1165.22	49500	22500					
	1.3	491994	0.9	*	1353.86	49500	22500					
15	200	4716	2.6	III	8.83	4437	6037	6062	2365	**SK 9042.1 - 160M/4**	392	516
	188	5017	2.6	III	9.39	4505	6125	6125	2387	SK 9042.1 - 160MH/4		
	173	5455	2.4	III	10.21	4592	6212	6210	2414			
	155	6091	2.2	III	11.4	4700	6343	6300	2450			
	132	7160	2.5	III	13.4	4860	6518	6300	2489			
	113	8367	2.1	III	15.66	5011	6678	6300	2513			
	97	9725	2.2	III	18.2	5245	6995	6300	2628			
	87	10857	2.1	III	20.32	5344	7085	6300	2642			
	74	12765	1.9	II	23.89	5497	7211	6300	2642			
	63	14913	1.7	II	27.91	5625	7317	6300	2617			
	51	18375	1.3	I	34.39	5582	7387	6300	2549			
	44	21661	1.1	I	40.54	5249	7376	6300	2450			
	37	25471	1.0	I	47.67	4761	7306	6300	2309			
	32	29756	0.8	*	55.69	4028	7155	6233	2124			
	219	4328	4.0	III	8.1	6822	8622	8550	3807	**SK 9052.1 - 160M/4**	558	524
	188	5023	3.9	III	9.4	7097	8960	8550	3956	SK 9052.1 - 160MH/4		
	178	5306	3.8	III	9.93	7196	9074	8550	4001			
	165	5723	3.7	III	10.71	7342	9252	8550	4079			
	149	6348	3.5	III	11.88	7538	9493	8550	4178			
	132	7187	3.3	III	13.45	7772	9785	8550	4293			
	108	8725	3.1	III	16.33	8152	10125	8550	4482			
	99	9586	3.7	III	17.94	8399	10125	8550	4628			
	89	10638	3.5	III	19.91	8550	10125	8550	4734			
	79	12038	3.2	III	22.53	8539	10125	8550	4858			
	76	12466	3.1	III	23.33	8525	10125	8550	4880			

(AGMA Class I = f_B 1.0 - 1.39 II = f_B 1.4 - 1.99 III = f_B ≥ 2.0 * = f_B < 1.0) **(Model Type in blue is an Energy Efficient motor)**

Send Quote Requests to info@automatedpt.com
Call +1(800)985-6929 To Order or Order Online At Nordgearmotors.com

15 hp Gearmotors



DRIVESYSTEMS

Motor Power P_n [hp]	Output Speed n_2 [rpm]	Output Torque T_2 [lb-in]	Service Factor f_B	AGMA Class	Gear Ratio i_{tot}	Standard Bearings F_{RN} OHL [lb]	Standard Bearings F_{AN} Thrust [lb]	Heavy Duty Bearings (VL) F_{RVL} OHL [lb]	Heavy Duty Bearings (VL) F_{AVL} Thrust [lb]	Model Type	Weight [lb]	Dim. Page
15	65	14614	2.8	III	27.35	8453	10125	8550	5047	**SK 9052.1 - 160M/4**	558	524
	57	16714	2.5	III	31.28	8372	10125	8550	5155	SK 9052.1 - 160MH/4		
	49	19348	2.2	III	36.21	8253	10125	8550	5279			
	45	21223	2.0	III	39.72	8156	10125	8550	5364			
	39	24023	1.8	II	44.96	7992	10125	8550	5443			
	32	29153	1.5	II	54.56	7625	10125	8550	5549			
	28	33352	1.3	I	62.42	7256	10125	8550	5603			
	25	38599	1.1	I	72.24	6689	10125	8550	5648			
	20	47111	0.9	*	88.17	5429	10125	8550	5648			
	50	18803	3.3	III	35.19	12566	11250	14850	6759	**SK 9072.1 - 160M/4**	867	532
	43	21966	3.1	III	41.11	13001	11250	14850	6980	SK 9072.1 - 160MH/4		
	35	26903	2.7	III	50.35	13592	11250	14850	7241			
	30	31226	2.4	III	58.44	13997	11250	14850	7418			
	25	37520	2.0	III	70.22	14090	11250	14850	7623			
	22	42580	1.8	II	79.69	13876	11250	14850	7745			
	19	48874	1.5	II	91.47	13565	11250	14850	7859			
	16	58872	1.3	I	110.18	12962	11250	14850	7961			
	11	84033	0.9	*	157.27	10712	11250	14850	7859			
	9.5	99843	0.8	*	186.86	8467	11250	14850	7846			
	33	28469	4.0	III	53.28	20563	13500	21375	13500	**SK 9082.1 - 160M/4**	1440	536
	28	33336	3.5	III	62.39	21375	13500	21375	13500	SK 9082.1 - 160MH/4		
	25	38204	3.0	III	71.5	21375	13500	21375	13500			
	21	44285	2.6	III	82.88	21362	13500	21375	13500			
	18	51220	2.2	III	95.86	21218	13500	21375	13500			
	15	62222	1.8	II	116.45	20941	13500	21375	13500			
	14	65433	1.8	II	122.46	20851	13500	21375	13500			
	12	79486	1.4	II	148.76	20392	13500	21375	13500			
	7.2	130546	0.9	*	244.32	17777	13500	21375	13500			
	15	62249	2.8	III	116.5	26984	14625	27000	14625	**SK 9086.1 - 160M/4**	1991	540
	14	68217	2.6	III	127.67	26852	14625	27000	14625	SK 9086.1 - 160MH/4		
	12	81089	2.2	III	151.76	26516	14625	27000	14625			
	9.1	103680	1.7	II	194.04	25774	14625	27000	14625			
	7.7	123236	1.4	II	230.64	24959	14625	27000	14625			
	7.5	126063	1.4	II	235.93	24827	14625	27000	14625	**SK 9086.1/52 - 160M/4**	2159	552
	6.5	144518	1.2	I	270.47	23873	14625	27000	14625	SK 9086.1/52 - 160MH/4		
	4.7	202049	0.9	*	378.14	19607	14625	27000	14625			
	4.1	231549	0.8	*	433.35	16292	14625	27000	14625			
	15	64242	4.0	III	120.23	35307	15750	36000	15750	**SK 9092.1 - 160M/4**	3248	544
	12	81730	3.5	III	152.96	35071	15750	36000	15750	SK 9092.1 - 160MH/4		
	9	105534	2.7	III	197.51	34650	15750	36000	15750			
	7	135397	2.1	III	253.4	33962	15750	36000	15750			
	5.9	158966	1.8	II	297.51	33284	15750	36000	15750			

(AGMA Class I = f_B 1.0 - 1.39 II = f_B 1.4 - 1.99 III = f_B ≥ 2.0 * = f_B < 1.0) **(Model Type in blue is an Energy Efficient motor)**

Send Quote Requests to info@automatedpt.com
Call +1(800)985-6929 To Order or Order Online At Nordgearmotors.com

DRIVESYSTEMS





15 hp, 20 hp Gearmotors

Motor Power P_n [hp]	Output Speed n_2 [rpm]	Output Torque T_2 [lb-in]	Service Factor f_B	AGMA Class	Gear Ratio i_{tot}	Standard Bearings F_{RN} OHL [lb]	Standard Bearings F_{AN} Thrust [lb]	Heavy Duty Bearings (VL) F_{RVL} OHL [lb]	Heavy Duty Bearings (VL) F_{AVL} Thrust [lb]	Model Type	Weight [lb]	Dim. Page
15	4.6	206072	1.4	II	385.67	31543	15750	36000	15750	**SK 9092.1/52 - 160M/4**	3416	552
	4.0	235882	1.2	I	441.46	30141	15750	36000	15750	SK 9092.1/52 - 160MH/4		
	2.9	324932	0.9	*	608.12	24095	15750	36000	15750			
	2.5	377445	0.8	*	706.4	18398	15750	36000	15750			
	6.6	144315	3.1	III	270.09	49500	22500			**SK 9096.1/62 - 160M/4**	4275	553
	6.0	158785	2.8	III	297.17	49500	22500			SK 9096.1/62 - 160MH/4		
	5.5	171368	2.6	III	320.72	49500	22500					
	4.8	198207	2.2	III	370.95	49500	22500					
	4.1	230293	1.9	II	431.00	49500	22500					
	3.7	253386	1.7	II	474.22	49500	22500					
	3.3	287642	1.5	II	538.33	49500	22500					
	2.9	324670	1.4	II	607.63	49500	22500					
	2.5	375522	1.2	I	702.80	49500	22500					
	2.2	436312	1.0	I	816.57	49500	22500					
	1.8	523267	0.8	*	979.31	49500	22500					
20	200	6306	2.0	III	8.83	4293	5762	5713	2196	**SK 9042.1 - 160L/4**	430	516
	188	6704	2.0	III	9.39	4347	5828	5744	2214	SK 9042.1 - 160LH/4		
	173	7290	1.8	II	10.21	4419	5893	5801	2221			
	155	8139	1.6	II	11.4	4505	5978	5861	2237			
	132	9567	1.9	II	13.4	4633	6095	5909	2237			
	113	11181	1.6	II	15.66	4741	6194	5931	2219			
	97	12994	1.7	II	18.2	4957	6458	6212	2315			
	87	14508	1.6	II	20.32	5029	6509	6194	2291			
	74	17057	1.4	II	23.89	5114	6530	6118	2237			
	63	19927	1.2	I	27.91	5171	6509	5981	2149			
	51	24553	1.0	I	34.39	4892	6395	5659	1960			
	44	28944	0.9	*	40.54	4185	6212	5297	1753			
	218	5783	3.0	III	8.1	6712	8444	8550	3722	**SK 9052.1 - 160L/4**	595	524
	188	6711	2.9	III	9.4	6964	8762	8550	3843	SK 9052.1 - 160LH/4		
	178	7090	2.8	III	9.93	7072	8874	8550	3893			
	165	7647	2.8	III	10.71	7200	9018	8550	3956			
	149	8482	2.6	III	11.88	7373	9236	8550	4046			
	131	9603	2.5	III	13.45	7578	9493	8550	4145			
	108	11659	2.3	III	16.33	7916	9880	8550	4300			
	98	12809	2.8	III	17.94	8181	10125	8550	4446			
	89	14215	2.6	III	19.91	8359	10125	8550	4527			
	78	16086	2.4	III	22.53	8397	10125	8550	4622			
	76	16657	2.3	III	23.33	8375	10125	8550	4637			
	65	19527	2.1	III	27.35	8244	10125	8550	4757			
	56	22333	1.9	II	31.28	8093	10125	8550	4849			
	49	25853	1.6	II	36.21	7871	10125	8550	4912			
	44	28359	1.5	II	39.72	7688	10125	8550	4952			
	39	32100	1.3	I	44.96	7373	10125	8550	4975			
	32	38954	1.1	I	54.56	6647	10125	8550	5000			
	28	44566	1.0	I	62.42	5864	10125	8550	4959			
	24	51577	0.8	*	72.24	4502	10125	8550	4896			

(AGMA Class I = f_B 1.0 - 1.39 II = f_B 1.4 - 1.99 III = f_B ≥ 2.0 * = f_B < 1.0) **(Model Type in blue is an Energy Efficient motor)**

Send Quote Requests to info@automatedpt.com
Call +1(800)985-6929 To Order or Order Online At Nordgearmotors.com

20 hp Gearmotors



DRIVESYSTEMS

Motor Power P_n [hp]	Output Speed n_2 [rpm]	Output Torque T_2 [lb-in]	Service Factor f_B	AGMA Class	Gear Ratio i_{tot}	Standard Bearings F_{RN} OHL [lb]	Standard Bearings F_{AN} Thrust [lb]	Heavy Duty Bearings (VL) F_{RVL} OHL [lb]	Heavy Duty Bearings (VL) F_{AVL} Thrust [lb]	Model Type	Weight [lb]	Dim. Page
20	97	13059	3.1	III	18.29	10467	11250	14850	5675	SK 9072.1 - 160L/4	904	532
	86	14715	3.0	III	20.61	10773	11250	14850	5823	SK 9072.1 - 160LH/4		
	70	18021	2.8	III	25.24	11297	11250	14850	6091			
	60	20912	2.7	III	29.29	11678	11250	14850	6257			
	50	25125	2.5	III	35.19	12150	11250	14850	6473			
	43	29351	2.3	III	41.11	12524	11250	14850	6620			
	35	35948	2.0	III	50.35	13019	11250	14850	6813			
	30	41724	1.8	II	58.44	13367	11250	14850	6923			
	25	50135	1.5	II	70.22	13496	11250	14850	7025			
	22	56896	1.3	I	79.69	13093	11250	14850	7058			
	19	65307	1.2	I	91.47	12499	11250	14850	7092			
	16	78665	1.0	I	110.18	11300	11250	14850	7013			
	42	29658	2.8	III	41.54	18936	13500	21375	13500	SK 9082.1 - 160L/4	1477	536
	40	31864	3.4	III	44.63	19307	13500	21375	13500	SK 9082.1 - 160LH/4		
	33	38040	3.0	III	53.28	20106	13500	21375	13500			
	28	44545	2.6	III	62.39	20849	13500	21375	13500			
	25	51049	2.3	III	71.5	21220	13500	21375	13500			
	21	59174	1.9	II	82.88	21024	13500	21375	13500			
	18	68441	1.7	II	95.86	20761	13500	21375	13500			
	15	83142	1.4	II	116.45	20255	13500	21375	13500			
	14	87433	1.3	I	122.46	20086	13500	21375	13500			
	12	106210	1.1	I	148.76	19226	13500	21375	13500			
	26	48193	3.0	III	67.5	27000	14625	27000	14625	SK 9086.1 - 160L/4	2029	540
	20	64614	2.7	III	90.5	26933	14625	27000	14625	SK 9086.1 - 160LH/4		
	15	83177	2.1	III	116.5	26456	14625	27000	14625			
	14	91152	1.9	II	127.67	26210	14625	27000	14625			
	12	108352	1.6	II	151.76	25594	14625	27000	14625			
	9.1	138539	1.3	I	194.04	24201	14625	27000	14625			
	7.7	164670	1.1	I	230.64	22626	14625	27000	14625			
	17	73025	3.1	III	102.28	35195	15750	36000	15750	SK 9092.1 - 160L/4	3285	544
	15	85841	3.0	III	120.23	35006	15750	36000	15750	SK 9092.1 - 160LH/4		
	12	109209	2.6	III	152.96	34576	15750	36000	15750			
	8.9	141016	2.0	III	197.51	33811	15750	36000	15750			
	7	180920	1.6	II	253.4	32540	15750	36000	15750			
	5.9	212413	1.3	I	297.51	31266	15750	36000	15750			
	4.6	275357	1.0	I	385.67	27857	15750	36000	15750	SK 9092.1/52 - 160L/4	3453	552
	4	315189	0.9	*	441.46	24930	15750	36000	15750	SK 9092.1/52 - 160LH/4		
	13	95336	3.2	III	133.53	49500	22500			SK 9096.1 - 160L/4	4024	548
	11	110158	3.2	III	154.29	49500	22500			SK 9096.1 - 160LH/4		
	10	123809	3.0	III	173.41	49500	22500					
	8.8	143201	3.0	III	200.57	49500	22500					

(AGMA Class I = f_B 1.0 - 1.39 II = f_B 1.4 - 1.99 III = f_B ≥ 2.0 * = f_B < 1.0) **(Model Type in blue is an Energy Efficient motor)**

Send Quote Requests to info@automatedpt.com
Call +1(800)985-6929 To Order or Order Online At Nordgearmotors.com

DRIVESYSTEMS

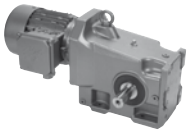



20 hp, 25 hp Gearmotors

Motor Power P_n [hp]	Output Speed n_2 [rpm]	Output Torque T_2 [lb-in]	Service Factor f_B	AGMA Class	Gear Ratio i_{tot}	Standard Bearings $F_{R\,N}$ OHL [lb]	Standard Bearings $F_{A\,N}$ Thrust [lb]	Heavy Duty Bearings (VL) $F_{R\,VL}$ OHL [lb]	Heavy Duty Bearings (VL) $F_{A\,VL}$ Thrust [lb]	Model Type	Weight [lb]	Dim. Page
20	7.6	166719	2.7	III	233.51	49500	22500			**SK 9096.1/62 - 160L/4**	4313	553
	6.5	192836	2.3	III	270.09	49500	22500			SK 9096.1/62 - 160LH/4		
	5.9	212170	2.1	III	297.17	49500	22500					
	5.5	228984	1.9	II	320.72	49500	22500					
	4.8	264847	1.7	II	370.95	49500	22500					
	4.1	307721	1.4	II	431.00	49500	22500					
	3.7	338579	1.3	I	474.22	49500	22500					
	3.3	384351	1.2	I	538.33	49500	22500					
	2.9	433829	1.0	I	607.63	49500	22500					
	2.5	501778	0.9	*	702.80	49500	22500					
	2.2	583006	0.8	*	816.57	49500	22500					
25	216	7293	3.2	III	8.1	6608	8309	8550	3634	**SK 9052.1 - 180MX/4**	648	524
	186	8462	2.7	III	9.4	6838	8566	8550	3746	SK 9052.1 - 180MH/4		
	176	8939	2.8	III	9.93	6930	8663	8550	3789			
	163	9641	2.7	III	10.71	7040	8802	8550	3843			
	147	10695	3.2	III	11.88	7225	9018	8550	3917			
	130	12108	3.1	III	13.45	7414	9207	8550	4001			
	107	14701	2.6	III	16.33	7688	9538	8550	4124			
	98	16150	2.4	III	17.94	7936	9880	8550	4266			
	88	17924	2.1	III	19.91	8096	10040	8550	4334			
	78	20282	1.9	II	22.53	8206	10125	8550	4397			
	75	21002	1.8	II	23.33	8168	10125	8550	4397			
	64	24621	1.7	II	27.35	7954	10125	8550	4475			
	56	28159	1.5	II	31.28	7704	10125	8550	4518			
	48	32597	1.3	I	36.21	7328	10125	8550	4534			
	44	35757	1.2	I	39.72	7013	10125	8550	4534			
	39	40474	1.0	I	44.96	6453	10125	8550	4518			
	32	49117	0.9	*	54.56	5045	10125	8550	4426			
	28	56192	0.8	*	62.42	3139	10125	8550	4307			
	114	13864	4.4	III	15.4	9839	11250	14850	5315	**SK 9072.1 - 180MX/4**	957	532
	106	14800	4.5	III	16.44	10022	11250	14850	5409	SK 9072.1 - 180MH/4		
	96	16465	4.2	III	18.29	10298	11250	14850	5522			
	85	18554	4.1	III	20.61	10555	11250	14850	5666			
	78	20219	3.7	III	22.46	10771	11250	14850	5749			
	69	22722	3.3	III	25.24	11027	11250	14850	5870			
	60	26368	2.9	III	29.29	11369	11250	14850	6023			
	50	31679	2.4	III	35.19	11761	11250	14850	6170			
	43	37009	1.8	II	41.11	12078	11250	14850	6278			
	39	40339	1.7	II	44.81	12254	11250	14850	6338			
	35	45327	1.6	II	50.35	12445	11250	14850	6401			
	30	52610	1.4	II	58.44	12668	11250	14850	6422			
	25	63214	1.2	I	70.22	12656	11250	14850	6422			
	22	71740	1.0	I	79.69	11963	11250	14850	6370			
	19	82344	0.9	*	91.47	10906	11250	14850	6278			

(AGMA Class I = f_B 1.0 - 1.39 II = f_B 1.4 - 1.99 III = f_B ≥ 2.0 * = f_B < 1.0) **(Model Type in blue is an Energy Efficient motor)**

Send Quote Requests to info@automatedpt.com
Call +1(800)985-6929 To Order or Order Online At Nordgearmotors.com

25 hp Gearmotors



DRIVESYSTEMS

Motor Power P_n [hp]	Output Speed n_2 [rpm]	Output Torque T_2 [lb-in]	Service Factor f_B	AGMA Class	Gear Ratio i_{tot}	Standard Bearings F_{RN} OHL [lb]	Standard Bearings F_{AN} Thrust [lb]	Heavy Duty Bearings (VL) F_{RVL} OHL [lb]	Heavy Duty Bearings (VL) F_{AVL} Thrust [lb]	Model Type	Weight [lb]	Dim. Page
25	49	32255	3.6	III	35.83	17989	13500	21375	13500	SK 9082.1 - 180MX/4	1530	536
	42	37396	3.1	III	41.54	18596	13500	21375	13500	SK 9082.1 - 180MH/4		
	39	40177	2.9	III	44.63	18916	13500	21375	13500			
	33	47964	2.4	III	53.28	19679	13500	21375	13500			
	28	56165	2.0	III	62.39	20336	13500	21375	13500			
	24	64367	1.8	II	71.5	20880	13500	21375	13500			
	21	74611	1.5	II	82.88	20561	13500	21375	13500			
	18	86296	1.3	I	95.86	20131	13500	21375	13500			
	15	104832	1.1	I	116.45	19296	13500	21375	13500			
	26	60766	2.9	III	67.5	27000	14625	27000	14625	SK 9086.1 - 180MX/4	2082	540
	19	81471	2.2	III	90.5	26505	14625	27000	14625	SK 9086.1 - 180MH/4		
	15	104877	1.7	II	116.5	25729	14625	27000	14625			
	14	114933	1.5	II	127.67	25326	14625	27000	14625			
	12	136619	1.3	I	151.76	24302	14625	27000	14625			
	12	130174	1.2	I	144.6	24629	14625	27000	14625	SK 9086.1/52 - 180MX/4	2249	552
	10	154741	1.1	I	171.89	23270	14625	27000	14625	SK 9086.1/52 - 180MH/4		
	7.4	212392	0.8	*	235.93	18563	14625	27000	14625			
	19	82461	3.4	III	91.6	35060	15750	36000	15750	SK 9092.1 - 180MX/4	3338	544
	17	92076	3.1	III	102.28	34902	15750	36000	15750	SK 9092.1 - 180MH/4		
	15	108235	2.6	III	120.23	34596	15750	36000	15750			
	11	137700	2.1	III	152.96	33901	15750	36000	15750			
	8.9	177805	1.6	II	197.51	32652	15750	36000	15750			
	9.1	172196	1.6	II	191.28	32850	15750	36000	15750	SK 9092.1/52 - 180MX/4	3506	552
	7.9	199978	1.4	II	222.14	31799	15750	36000	15750	SK 9092.1/52 - 180MH/4		
	6.2	252749	1.1	I	280.76	29230	15750	36000	15750			
	4.5	347193	0.8	*	385.67	21965	15750	36000	15750			
	11	138897	3.2	III	154.29	49500	22500			SK 9096.1 - 180MX/4	4077	548
	10	156109	2.8	III	173.41	49500	22500			SK 9096.1 - 180MH/4		
	8.7	180560	2.5	III	200.57	49500	22500					
	8.4	188103	2.4	III	208.95	49500	22500			SK 9096.1/62 - 180MX/4	4366	553
	7.5	210213	2.1	III	233.51	49500	22500			SK 9096.1/62 - 180MH/4		
	6.5	243144	1.8	II	270.09	49500	22500					
	5.9	267522	1.7	II	297.17	49500	22500					
	5.5	288722	1.5	II	320.72	49500	22500					
	4.7	333941	1.3	I	370.95	49500	22500					
	4.1	388000	1.1	I	431.00	49500	22500					
	3.7	426908	1.0	I	474.22	49500	22500					
	3.3	484622	0.9	*	538.33	49500	22500					
	2.9	547008	0.8	*	607.63	49500	22500					

(AGMA Class I = f_B 1.0 - 1.39 II = f_B 1.4 - 1.99 III = f_B ≥ 2.0 * = f_B < 1.0) **(Model Type in blue is an Energy Efficient motor)**

Send Quote Requests to info@automatedpt.com
Call +1(800)985-6929 To Order or Order Online At Nordgearmotors.com

DRIVESYSTEMS

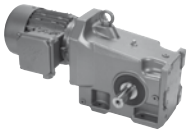



30 hp Gearmotors

Motor Power P_n [hp]	Output Speed n_2 [rpm]	Output Torque T_2 [lb-in]	Service Factor f_B	AGMA Class	Gear Ratio i_{tot}	Standard Bearings $F_{R\,N}$ OHL [lb]	Standard Bearings $F_{A\,N}$ Thrust [lb]	Heavy Duty Bearings (VL) $F_{R\,VL}$ OHL [lb]	Heavy Duty Bearings (VL) $F_{A\,VL}$ Thrust [lb]	Model Type	Weight [lb]	Dim. Page
30	217	8726	2.6	III	8.1	6491	8111	8550	3542	**SK 9052.1 - 180LX/4**	648	524
	187	10127	2.3	III	9.4	6701	8350	8550	3634	SK 9052.1 - 180LH/4		
	177	10698	2.3	III	9.93	6775	8444	8550	3668			
	164	11538	2.2	III	10.71	6876	8566	8550	3722			
	148	12798	2.7	III	11.88	7025	8748	8550	3776			
	130	14490	2.6	III	13.45	7193	8930	8550	3843			
	107	17592	2.2	III	16.33	7436	9178	8550	3931			
	98	19327	2.0	III	17.94	7691	9506	8550	4079			
	88	21449	1.8	II	19.91	7823	9646	8550	4124			
	78	24272	1.6	II	22.53	7976	9785	8550	4165			
	75	25133	1.5	II	23.33	7920	9785	8550	4145			
	64	29464	1.4	II	27.35	7601	9977	8550	4205			
	56	33698	1.3	I	31.28	7223	10024	8550	4205			
	48	39009	1.1	I	36.21	6640	10089	8550	4165			
	44	42790	1.0	I	39.72	6134	10040	8550	4124			
	39	48435	0.9	*	44.96	5180	9977	8550	4046			
	192	9868	3.8	III	9.16	8492	11250	13214	4599	**SK 9072.1 - 180LX/4**	957	532
	172	10978	3.7	III	10.19	8719	11250	13574	4721	SK 9072.1 - 180LH/4		
	153	12367	3.6	III	11.48	8964	11250	13896	4826			
	146	12992	3.4	III	12.06	9061	11250	14049	4874			
	140	13477	3.3	III	12.51	9144	11250	14159	4921			
	125	15147	3.0	III	14.06	9380	11250	14490	5024			
	114	16590	3.7	III	15.4	9655	11250	14850	5171			
	107	17711	3.7	III	16.44	9830	11250	14850	5263			
	96	19704	3.5	III	18.29	10060	11250	14850	5364			
	85	22203	3.4	III	20.61	10316	11250	14850	5479			
	78	24196	3.1	III	22.46	10501	11250	14850	5558			
	70	27191	2.8	III	25.24	10730	11250	14850	5648			
	60	31554	2.4	III	29.29	11016	11250	14850	5749			
	50	37910	2.0	III	35.19	11336	11250	14850	5859			
	43	44288	1.5	II	41.11	11583	11250	14850	5918			
	39	48274	1.4	II	44.81	11693	11250	14850	5936			
	35	54242	1.3	I	50.35	11831	11250	14850	5945			
	30	62957	1.2	I	58.44	11963	11250	14850	5918			
	25	75648	1.0	I	70.22	11601	11250	14850	5803			
	22	85850	0.9	*	79.69	10496	11250	14850	5684			
	19	98540	0.8	*	91.47	8690	11250	14850	5497			
	56	33687	3.4	III	31.27	17100	13500	21375	13500	**SK 9082.1 - 180LX/4**	1530	536
	49	38600	3.0	III	35.83	17649	13500	21375	13500	SK 9082.1 - 180LH/4		
	42	44751	2.6	III	41.54	18218	13500	21375	13500			
	39	48080	2.4	III	44.63	18484	13500	21375	13500			
	33	57398	2.0	III	53.28	19166	13500	21375	13500			
	28	67213	1.7	II	62.39	19789	13500	21375	13500			
	25	77027	1.5	II	71.5	20216	13500	21375	13500			
	21	89286	1.3	I	82.88	20009	13500	21375	13500			
	18	103270	1.1	I	95.86	19375	13500	21375	13500			
	15	125451	0.9	*	116.45	18115	13500	21375	13500			

(AGMA Class I = f_B 1.0 - 1.39 II = f_B 1.4 - 1.99 III = f_B ≥ 2.0 * = f_B < 1.0) **(Model Type in blue is an Energy Efficient motor)**

Send Quote Requests to info@automatedpt.com
Call +1(800)985-6929 To Order or Order Online At Nordgearmotors.com

30 hp, 40 hp Gearmotors



DRIVESYSTEMS

Motor Power P_n [hp]	Output Speed n_2 [rpm]	Output Torque T_2 [lb-in]	Service Factor f_B	AGMA Class	Gear Ratio i_{tot}	Standard Bearings F_{RN} OHL [lb]	Standard Bearings F_{AN} Thrust [lb]	Heavy Duty Bearings (VL) F_{RVL} OHL [lb]	Heavy Duty Bearings (VL) F_{AVL} Thrust [lb]	Model Type	Weight [lb]	Dim. Page
30	35	54188	3.3	III	50.3	25056	14625	27000	14625	**SK 9086.1 - 180LX/4**	2082	540
	30	63453	2.8	III	58.9	25940	14625	27000	14625	SK 9086.1 - 180LH/4		
	26	72718	2.4	III	67.5	26741	14625	27000	14625			
	19	97495	1.8	II	90.5	25997	14625	27000	14625			
	15	125505	1.4	II	116.5	24854	14625	27000	14625			
	14	137539	1.3	I	127.67	24255	14625	27000	14625			
	12	163491	1.1	I	151.76	22707	14625	27000	14625			
	22	86184	3.3	III	80	34999	15750	36000	15750	**SK 9092.1 - 180LX/4**	3338	544
	19	98680	2.9	III	91.6	34783	15750	36000	15750	SK 9092.1 - 180LH/4		
	17	110186	2.6	III	102.28	34556	15750	36000	15750			
	15	129523	2.2	III	120.23	34112	15750	36000	15750			
	11	164783	1.7	II	152.96	33098	15750	36000	15750			
	8.9	212777	1.3	I	197.51	31250	15750	36000	15750			
	9.2	206065	1.4	II	191.28	31543	15750	36000	15750	**SK 9092.1/52 - 180LX/4**	3506	552
	7.9	239311	1.2	I	222.14	29963	15750	36000	15750	SK 9092.1/52 - 180LH/4		
	6.3	302462	0.9	*	280.76	25945	15750	36000	15750			
	13	143851	3.1	III	133.53	49500	22500			**SK 9096.1 - 180LX/4**	4077	548
	11	166216	2.7	III	154.29	49500	22500			SK 9096.1 - 180LH/4		
	10	186814	2.4	III	173.41	49500	22500					
	8.8	216074	2.0	III	200.57	49500	22500					
	8.4	225101	2.0	III	208.95	49500	22500			**SK 9096.1/62 - 180LX/4**	4366	553
	7.5	251560	1.8	II	233.51	49500	22500			SK 9096.1/62 - 180LH/4		
	6.5	290967	1.5	II	270.09	49500	22500					
	5.9	320140	1.4	II	297.17	49500	22500					
	5.5	345511	1.3	I	320.72	49500	22500					
	4.7	399623	1.1	I	370.95	49500	22500					
	4.1	464315	1.0	I	431.00	49500	22500					
	3.7	510876	0.9	*	474.22	49500	22500					
	3.3	579941	0.8	*	538.33	49500	22500					
40	194	12974	3.2	III	9.16	8255	11241	12762	4412	**SK 9072.1 - 200L/4**	1114	532
	175	14433	2.9	III	10.19	8433	11250	13021	4505	SK 9072.1 - 200LH/4		
	155	16260	2.7	III	11.48	8663	11250	13282	4599			
	148	17082	2.6	III	12.06	8737	11250	13403	4637			
	142	17719	2.5	III	12.51	8800	11250	13529	4673			
	127	19914	2.3	III	14.06	9005	11250	13795	4743			
	116	21812	3.0	III	15.4	9272	11250	14200	4889			
	108	23285	2.9	III	16.44	9430	11250	14414	4968			
	97	25906	2.7	III	18.29	9614	11250	14636	5040			
	86	29192	2.6	III	20.61	9803	11250	14850	5121			
	79	31812	2.4	III	22.46	9952	11250	14850	5155			
	71	35749	2.1	III	25.24	10127	11250	14850	5204			
	61	41486	1.8	II	29.29	10301	11250	14850	5238			
	51	49842	1.5	II	35.19	10490	11250	14850	5247			
	43	58227	1.2	I	41.11	10593	11250	14850	5229			

(AGMA Class I = f_B 1.0 - 1.39 II = f_B 1.4 - 1.99 III = f_B ≥ 2.0 * = f_B < 1.0) **(Model Type in blue is an Energy Efficient motor)**

Send Quote Requests to info@automatedpt.com
Call +1(800)985-6929 To Order or Order Online At Nordgearmotors.com

DRIVESYSTEMS

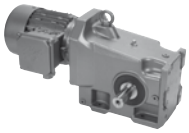



40 hp, 50 hp Gearmotors

Motor Power P_n [hp]	Output Speed n_2 [rpm]	Output Torque T_2 [lb-in]	Service Factor f_B	AGMA Class	Gear Ratio i_{tot}	Standard Bearings $F_{R\,N}$ OHL [lb]	Standard Bearings $F_{A\,N}$ Thrust [lb]	Heavy Duty Bearings (VL) $F_{R\,VL}$ OHL [lb]	Heavy Duty Bearings (VL) $F_{A\,VL}$ Thrust [lb]	Model Type	Weight [lb]	Dim. Page
40	40	63468	1.1	I	44.81	10645	11250	14850	5171	**SK 9072.1 - 200L/4**	1114	532
	35	71315	1.0	I	50.35	10625	11250	14850	5081	SK 9072.1 - 200LH/4		
	30	82773	0.9	*	58.44	10548	11250	14850	4921			
	25	99458	0.8	*	70.22	8532	11250	14191	4631			
	67	37832	3.0	III	26.71	15937	13500	21375	13174	**SK 9082.1 - 200L/4**	1687	536
	57	44290	2.6	III	31.27	16475	13500	21375	13500	SK 9082.1 - 200LH/4		
	50	50749	2.3	III	35.83	16931	13500	21375	13500			
	43	58836	2.0	III	41.54	17406	13500	21375	13500			
	40	63213	1.8	II	44.63	17645	13500	21375	13500			
	33	75465	1.5	II	53.28	18178	13500	21375	13500			
	29	88368	1.3	I	62.39	18533	13500	21375	13500			
	25	101271	1.1	I	71.5	18887	13500	21375	13500			
	21	117390	1.0	I	82.88	18610	13500	21375	13500			
	19	135774	0.8	*	95.86	17408	13500	21375	13500			
	42	59672	3.0	III	42.13	23220	14625	27000	14625	**SK 9086.1 - 200L/4**	2238	540
	35	71244	2.5	III	50.3	24086	14625	27000	14625	SK 9086.1 - 200LH/4		
	30	83425	2.1	III	58.9	24885	14625	27000	14625			
	26	95606	1.9	II	67.5	25481	14625	27000	14625			
	20	128182	1.4	II	90.5	24725	14625	27000	14625			
	30	83085	3.4	III	58.66	35048	15750	36000	15750	**SK 9092.1 - 200L/4**	3495	544
	26	97546	2.9	III	68.87	34803	15750	36000	15750	SK 9092.1 - 200LH/4		
	22	113310	2.5	III	80	34488	15750	36000	15750			
	19	129740	2.2	III	91.6	34106	15750	36000	15750			
	17	144867	2.0	III	102.28	33705	15750	36000	15750			
	15	170291	1.7	II	120.23	32915	15750	36000	15750			
	17	144726	3.1	III	102.18	49500	22500			**SK 9096.1 - 200L/4**	4234	548
	15	167388	2.6	III	118.18	49500	22500			SK 9096.1 - 200LH/4		
	13	189129	2.3	III	133.53	49500	22500					
	12	218533	2.0	III	154.29	49500	22500					
	10	245615	1.8	II	173.41	49500	22500					
	8.9	284083	1.6	II	200.57	49500	22500					
	8.5	295953	1.5	II	208.95	49500	22500			**SK 9096.1/62 - 200L/4**	4522	553
	7.6	330739	1.3	I	233.51	49500	22500			SK 9096.1/62 - 200LH/4		
	6.6	382550	1.2	I	270.09	49500	22500					
	6.0	420906	1.1	I	297.17	49500	22500					
	5.6	454262	1.0	I	320.72	49500	22500					
	4.8	525406	0.8	*	370.95	49500	22500					
50	193	16356	2.5	III	9.16	8019	10922	12296	4246	**SK 9072.1 - 225S/4**	1186	532
	173	18196	2.3	III	10.19	8183	11133	12521	4313	SK 9072.1 - 225SH/4		
	154	20499	2.2	III	11.48	8370	11250	12746	4383			
	146	21535	2.1	III	12.06	8438	11250	12839	4412			
	141	22338	2.0	III	12.51	8510	11250	12893	4442			
	126	25106	1.8	II	14.06	8649	11250	13073	4491			

(AGMA Class I = f_B 1.0 - 1.39 II = f_B 1.4 - 1.99 III = f_B ≥ 2.0 * = f_B < 1.0) **(Model Type in blue is an Energy Efficient motor)**

Send Quote Requests to info@automatedpt.com
Call +1(800)985-6929 To Order or Order Online At Nordgearmotors.com

50 hp Gearmotors



DRIVESYSTEMS

Motor Power P_n [hp]	Output Speed n_2 [rpm]	Output Torque T_2 [lb-in]	Service Factor f_B	AGMA Class	Gear Ratio i_{tot}	Standard Bearings F_{RN} OHL [lb]	Standard Bearings F_{AN} Thrust [lb]	Heavy Duty Bearings (VL) F_{RVL} OHL [lb]	Heavy Duty Bearings (VL) F_{AVL} Thrust [lb]	Model Type	Weight [lb]	Dim. Page
50	115	27499	2.4	III	15.4	8919	11250	13489	4631	**SK 9072.1 - 225S/4**	1186	532
	107	29356	2.3	III	16.44	9059	11250	13705	4689	SK 9072.1 - 225SH/4		
	97	32659	2.1	III	18.29	9196	11250	13853	4727			
	86	36802	2.0	III	20.61	9335	11250	13984	4772			
	79	40106	1.9	II	22.46	9428	11250	14054	4772			
	70	45070	1.7	II	25.24	9547	11250	14103	4772			
	60	52301	1.4	II	29.29	9612	11250	14076	4734			
	50	62837	1.2	I	35.19	9657	11250	13928	4637			
	43	73408	0.9	*	41.11	9590	11250	13615	4498			
	39	80015	0.9	*	44.81	9520	11250	13365	4399			
	35	89907	0.8	*	50.35	9392	11250	12949	4226			
	220	14357	3.2	III	8.04	11671	13500	21375	9637	**SK 9082.1 - 225S/4**	1760	536
	143	21981	2.9	III	12.31	12938	13500	21375	10712	SK 9082.1 - 225SH/4		
	121	26088	3.2	III	14.61	13615	13500	21375	11277			
	102	30981	3.1	III	17.35	14155	13500	21375	11700			
	79	39945	2.9	III	22.37	14947	13500	21375	12357			
	66	47694	2.4	III	26.71	15500	13500	21375	12800			
	56	55837	2.1	III	31.27	15944	13500	21375	13174			
	49	63980	1.8	II	35.83	16319	13500	21375	13496			
	42	74176	1.6	II	41.54	16677	13500	21375	13500			
	40	79693	1.4	II	44.63	16844	13500	21375	13500			
	33	95139	1.2	I	53.28	17186	13500	21375	13500			
	28	111406	1.0	I	62.39	17404	13500	21375	13500			
	25	127673	0.9	*	71.5	17514	13500	21375	13500			
	21	147994	0.8	*	82.88	16457	13500	21375	13500			
	220	14357	3.2	III	8.04	15134	14625	27000	11243	**SK 9086.1 - 225S/4**	2311	540
	185	17053	3.1	III	9.55	15847	14625	27000	11759	SK 9086.1 - 225SH/4		
	152	20713	3.2	III	11.6	16720	14625	27000	12418			
	143	21981	2.9	III	12.31	16931	14625	27000	12557			
	120	26249	2.7	III	14.7	17656	14625	27000	13113			
	108	29249	3.1	III	16.38	18331	14625	27000	13561			
	99	31731	2.9	III	17.77	18610	14625	27000	13804			
	84	37713	2.9	III	21.12	19445	14625	27000	14414			
	70	45016	2.7	III	25.21	20261	14625	27000	14625			
	60	52712	2.5	III	29.52	20990	14625	27000	14625			
	50	63283	2.5	III	35.44	21715	14625	27000	14625			
	42	75229	2.4	III	42.13	22543	14625	27000	14625			
	35	89818	2.0	III	50.3	23279	14625	27000	14625			
	30	105174	1.7	II	58.9	23848	14625	27000	14625			
	26	120531	1.5	II	67.5	24329	14625	27000	14625			
	20	161601	1.1	I	90.5	22831	14625	27000	14625			
	35	88836	3.0	III	49.75	34956	15750	36000	15750	**SK 9092.1 - 225S/4**	3568	544
	30	104746	2.7	III	58.66	34666	15750	36000	15750	SK 9092.1 - 225SH/4		
	26	122977	2.3	III	68.87	34270	15750	36000	15750			
	22	142851	2.0	III	80	33761	15750	36000	15750			

(AGMA Class I = f_B 1.0 - 1.39 II = f_B 1.4 - 1.99 III = f_B ≥ 2.0 * = f_B < 1.0) **(Model Type in blue is an Energy Efficient motor)**

Send Quote Requests to info@automatedpt.com
Call +1(800)985-6929 To Order or Order Online At Nordgearmotors.com

DRIVESYSTEMS

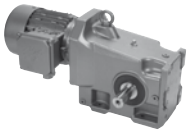



50 hp, 60 hp Gearmotors

Motor Power P_n [hp]	Output Speed n_2 [rpm]	Output Torque T_2 [lb-in]	Service Factor f_B	AGMA Class	Gear Ratio i_{tot}	Standard Bearings F_{RN} OHL [lb]	Standard Bearings F_{AN} Thrust [lb]	Heavy Duty Bearings (VL) F_{RVL} OHL [lb]	Heavy Duty Bearings (VL) F_{AVL} Thrust [lb]	Model Type	Weight [lb]	Dim. Page
50	19	163565	1.7	II	91.6	33138	15750	36000	15750	SK 9092.1 - 225S/4 SK 9092.1 - 225SH/4	3568	544
	17	182635	1.6	II	102.28	32477	15750	36000	15750			
	15	214688	1.3	I	120.23	31163	15750	36000	15750			
	22	145405	3.0	III	81.43	49500	22500			SK 9096.1 - 225S/4 SK 9096.1 - 225SH/4	4306	548
	20	159993	2.8	III	89.60	49500	22500					
	17	182457	2.4	III	102.18	49500	22500					
	15	211027	2.1	III	118.18	49500	22500					
	13	238437	1.9	II	133.53	49500	22500					
	11	275507	1.6	II	154.29	49500	22500					
	10	309648	1.4	II	173.41	49500	22500					
	8.8	358146	1.2	I	200.57	49500	22500					
	8.4	373110	1.2	I	208.95	49500	22500			SK 9096.1/62 - 225S/4 SK 9096.1/62 - 225SH/4	4595	553
	7.6	416965	1.1	I	233.51	49500	22500					
	6.5	482284	0.9	*	270.09	49500	22500					
	5.9	530639	0.8	*	297.17	49500	22500					
	5.5	572691	0.8	*	320.72	49500	22500					
60	193	19569	2.1	III	9.16	7799	10559	11849	4073	SK 9072.1 - 225M/4 SK 9072.1 - 225MH/4	1259	532
	174	21769	1.9	II	10.19	7925	10748	12002	4118			
	154	24525	1.8	II	11.48	8069	10922	12168	4165			
	147	25764	1.7	II	12.06	8116	10991	12231	4178			
	141	26726	1.7	II	12.51	8165	11043	12263	4192			
	126	30037	1.5	II	14.06	8296	11205	12380	4226			
	115	32900	2.0	III	15.4	8537	11250	12782	4356			
	108	35121	1.9	II	16.44	8669	11250	12953	4406			
	97	39074	1.8	II	18.29	8768	11250	13010	4412			
	86	44030	1.7	II	20.61	8843	11250	13039	4406			
	79	47982	1.6	II	22.46	8885	11250	13057	4399			
	70	53921	1.4	II	25.24	8937	11250	12951	4336			
	60	62573	1.2	I	29.29	8912	11250	12803	4239			
	43	87825	0.8	*	41.11	8579	11250	11711	3814			
	220	17176	3.7	III	8.04	11493	13500	21375	9500	SK 9082.1 - 225M/4 SK 9082.1 - 225MH/4	1832	536
	144	26298	2.8	III	12.31	12686	13500	21375	10474			
	121	31212	3.7	III	14.61	13358	13500	21375	11045			
	102	37065	3.1	III	17.35	13849	13500	21375	11441			
	88	43069	2.7	III	20.16	14254	13500	21375	11777			
	79	47790	2.4	III	22.37	14537	13500	21375	12024			
	66	57062	2.0	III	26.71	15003	13500	21375	12395			
	57	66803	1.7	II	31.27	15370	13500	21375	12740			
	49	76545	1.5	II	35.83	15631	13500	21375	12944			
	43	88743	1.3	I	41.54	15903	13500	21375	13174			
	40	95345	1.2	I	44.63	16007	13500	21375	13259			
	33	113824	1.0	I	53.28	16157	13500	21375	13430			
	28	133286	0.9	*	62.39	16232	13500	21375	13500			
	25	152748	0.8	*	71.5	16047	13500	21375	13500			

(AGMA Class I = f_B 1.0 - 1.39 II = f_B 1.4 - 1.99 III = f_B ≥ 2.0 * = f_B < 1.0) **(Model Type in blue is an Energy Efficient motor)**

Send Quote Requests to info@automatedpt.com
Call +1(800)985-6929 To Order or Order Online At Nordgearmotors.com

60 hp, 75 hp Gearmotors



DRIVESYSTEMS

Motor Power P_n [hp]	Output Speed n_2 [rpm]	Output Torque T_2 [lb-in]	Service Factor f_B	AGMA Class	Gear Ratio i_{tot}	Standard Bearings F_{RN} OHL [lb]	Standard Bearings F_{AN} Thrust [lb]	Heavy Duty Bearings (VL) F_{RVL} OHL [lb]	Heavy Duty Bearings (VL) F_{AVL} Thrust [lb]	Model Type	Weight [lb]	Dim. Page
60	70	53857	3.3	III	25.21	19832	14625	27000	14625	SK 9086.1 - 225M/4	2384	540
	60	63065	2.8	III	29.52	20502	14625	27000	14625	SK 9086.1 - 225MH/4		
	50	75712	2.1	III	35.44	21062	14625	27000	14625			
	42	90004	2.0	III	42.13	21863	14625	27000	14625			
	35	107458	1.6	II	50.3	22363	14625	27000	14625			
	30	125830	1.4	II	58.9	22813	14625	27000	14625			
	26	144203	1.2	I	67.5	23175	14625	27000	14625			
	52	72956	3.7	III	34.15	35197	15750	36000	15750	SK 9092.1 - 225M/4	3640	544
	45	83531	3.4	III	39.1	35042	15750	36000	15750	SK 9092.1 - 225MH/4		
	44	86842	3.3	III	40.65	34990	15750	36000	15750			
	36	106283	2.7	III	49.75	34634	15750	36000	15750			
	30	125317	2.3	III	58.66	34214	15750	36000	15750			
	26	147129	1.9	II	68.87	33640	15750	36000	15750			
	22	170907	1.7	II	80	32893	15750	36000	15750			
	19	195688	1.4	II	91.6	31975	15750	36000	15750			
	17	218504	1.3	I	102.28	30989	15750	36000	15750			
	25	150419	2.9	III	70.41	49500	22500			SK 9096.1 - 225M/4	4379	548
	22	173962	2.5	III	81.43	49500	22500			SK 9096.1 - 225MH/4		
	20	191416	2.3	III	89.60	49500	22500					
	17	218291	2.0	III	102.18	49500	22500					
	15	252472	1.8	II	118.18	49500	22500					
	13	285265	1.6	II	133.53	49500	22500					
	11	329615	1.3	I	154.29	49500	22500					
	8.5	446387	1.0	I	208.95	49500	22500			SK 9096.1/62 - 225M/4	4668	553
	7.6	498856	0.9	*	233.51	49500	22500			SK 9096.1/62 - 225MH/4		
	6.6	577003	0.8	*	270.09	49500	22500					
75	222	21327	3	III	8.04	11239	13500	21375	9304	SK 9082.1 - 250M/4	2238	536
	145	32654	2.3	III	12.31	12299	13500	21375	10161	SK 9082.1 - 250MH/4		
	122	38756	3.0	III	14.61	12931	13500	21375	10712			
	103	46024	2.5	III	17.35	13376	13500	21375	11045			
	88	53478	2.2	III	20.16	13685	13500	21375	11313			
	80	59340	1.9	II	22.37	13921	13500	21375	11516			
	67	70853	1.6	II	26.71	14236	13500	21375	11795			
	57	82949	1.4	II	31.27	14492	13500	21375	12004			
	50	95045	1.2	I	35.83	14618	13500	21375	12141			
	43	110192	1.0	I	41.54	14760	13500	21375	12238			
	40	118389	1.0	I	44.63	14726	13500	21375	12276			
	33	141334	0.8	*	53.28	14639	13500	21375	12258			

(AGMA Class I = f_B 1.0 - 1.39 II = f_B 1.4 - 1.99 III = f_B ≥ 2.0 * = f_B < 1.0) **(Model Type in blue is an Energy Efficient motor)**

Send Quote Requests to info@automatedpt.com
Call +1(800)985-6929 To Order or Order Online At Nordgearmotors.com

DRIVESYSTEMS

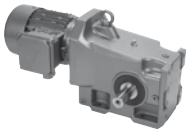



75 hp, 100 hp Gearmotors

Motor Power P_n [hp]	Output Speed n_2 [rpm]	Output Torque T_2 [lb-in]	Service Factor f_B	AGMA Class	Gear Ratio i_{tot}	Standard Bearings F_{RN} OHL [lb]	Standard Bearings F_{AN} Thrust [lb]	Heavy Duty Bearings (VL) F_{RVL} OHL [lb]	Heavy Duty Bearings (VL) F_{AVL} Thrust [lb]	Model Type	Weight [lb]	Dim. Page
75	121	38994	3.1	III	14.7	16929	14625	27000	12557	**SK 9086.1 - 250M/4**	2789	540
	109	43451	3.5	III	16.38	17555	14625	27000	13007	SK 9086.1 - 250MH/4		
	100	47138	3.3	III	17.77	17802	14625	27000	13199			
	84	56024	3.2	III	21.12	18511	14625	27000	13714			
	71	66874	2.6	III	25.21	19134	14625	27000	14186			
	60	78307	2.3	III	29.52	19672	14625	27000	14576			
	50	94011	1.7	II	35.44	20077	14625	27000	14625			
	42	111757	1.6	II	42.13	20666	14625	27000	14625			
	35	133429	1.3	I	50.3	21044	14625	27000	14625			
	30	156242	1.1	I	58.9	21220	14625	27000	14625			
	26	179055	1.0	I	67.5	21310	14625	27000	14625			
	52	90589	3.0	III	34.15	34927	15750	36000	15750	**SK 9092.1 - 250M/4**	4046	544
	46	103720	2.7	III	39.1	34686	15750	36000	15750	SK 9092.1 - 250MH/4		
	44	107831	2.6	III	40.65	34603	15750	36000	15750			
	36	131970	2.1	III	49.75	34049	15750	36000	15750			
	30	155606	1.8	II	58.66	33388	15750	36000	15750			
	26	182690	1.6	II	68.87	32474	15750	36000	15750			
	22	212214	1.3	I	80	31275	15750	36000	15750			
	19	242985	1.2	I	91.6	29768	15750	36000	15750			
	17	271315	1.0	I	102.28	28116	15750	36000	15750			
	32	149239	3.0	III	56.26	47153	22500			**SK 9096.1 - 250M/4**	4785	548
	27	172609	2.6	III	65.07	48701	22500			SK 9096.1 - 250MH/4		
	25	186775	2.4	III	70.41	49471	22500					
	22	216007	2.0	III	81.43	49500	22500					
	20	237680	1.9	II	89.60	49500	22500					
	17	271050	1.6	II	102.18	49500	22500					
	15	313493	1.4	II	118.18	49500	22500					
	13	354211	1.2	I	133.53	49500	22500					
	12	409281	1.1	I	154.29	49500	22500					
100	222	28340	2.2	III	8.04	10847	13500	20997	8953	**SK 9082.1 - 280S/4**	2624	536
	145	43391	1.7	II	12.31	11662	13500	21375	9653	SK 9082.1 - 280SH/4		
	122	51498	2.2	III	14.61	12258	13500	21375	10145			
	103	61157	1.9	II	17.35	12553	13500	21375	10393			
	89	71061	1.6	II	20.16	12762	13500	21375	10575			
	80	78851	1.5	II	22.37	12884	13500	21375	10712			
	67	94149	1.2	I	26.71	12989	13500	21375	10834			
	57	110223	1.0	I	31.27	13003	13500	21375	10852			
	50	126296	0.9	*	35.83	12938	13500	21375	10834			
	43	146423	0.8	*	41.54	12751	13500	21375	10712			

(AGMA Class I = f_B 1.0 - 1.39 II = f_B 1.4 - 1.99 III = f_B ≥ 2.0 * = f_B < 1.0) **(Model Type in blue is an Energy Efficient motor)**

Send Quote Requests to info@automatedpt.com
Call +1(800)985-6929 To Order or Order Online At Nordgearmotors.com

100 hp Gearmotors



DRIVESYSTEMS

Motor Power P_n [hp]	Output Speed n_2 [rpm]	Output Torque T_2 [lb-in]	Service Factor f_B	AGMA Class	Gear Ratio i_{tot}	Standard Bearings F_{RN} OHL [lb]	Standard Bearings F_{AN} Thrust [lb]	Heavy Duty Bearings (VL) F_{RVL} OHL [lb]	Heavy Duty Bearings (VL) F_{AVL} Thrust [lb]	Model Type	Weight [lb]	Dim. Page
100	222	28340	2.7	III	8.04	14324	14625	26989	10629	**SK 9086.1 - 280S/4**	3175	540
	187	33663	2.7	III	9.55	14879	14625	27000	11027	SK 9086.1 - 280SH/4		
	154	40889	2.7	III	11.6	15662	14625	27000	11608			
	145	43391	2.5	III	12.31	15692	14625	27000	11628			
	122	51816	2.3	III	14.7	16225	14625	27000	12047			
	109	57737	2.7	III	16.38	16846	14625	27000	12476			
	101	62637	2.5	III	17.77	16999	14625	27000	12598			
	85	74445	2.4	III	21.12	17624	14625	27000	13030			
	71	88862	2.0	III	25.21	18061	14625	27000	13367			
	61	104054	1.7	II	29.52	18425	14625	27000	13606			
	50	124921	1.3	I	35.44	18493	14625	27000	13694			
	42	148503	1.2	I	42.13	18799	14625	27000	13959			
	36	177301	1.0	I	50.3	18801	14625	27000	13959			
	30	207615	0.9	*	58.9	18574	14625	27000	13894			
	72	87910	2.5	III	24.94	34972	15750	36000	15750	**SK 9092.1 - 280S/4**	4432	544
	61	103208	2.5	III	29.28	34695	15750	36000	15750	SK 9092.1 - 280SH/4		
	52	120374	2.2	III	34.15	34331	15750	36000	15750			
	46	137822	2.1	III	39.1	33899	15750	36000	15750			
	44	143286	2.0	III	40.65	33748	15750	36000	15750			
	36	175362	1.6	II	49.75	32740	15750	36000	15750			
	30	206769	1.4	II	58.66	31514	15750	36000	15750			
	26	242758	1.2	I	68.87	29781	15750	36000	15750			
	22	281990	1.0	I	80	27416	15750	36000	15750			
	20	322878	0.9	*	91.6	24278	15750	36000	15750			
	17	360524	0.8	*	102.28	20504	15750	36000	15750			
	79	80191	2.9	III	22.75	36941	22500			**SK 9096.1 - 280S/4**	5171	548
	68	92739	2.9	III	26.31	38360	22500			SK 9096.1 - 280SH/4		
	63	100353	2.8	III	28.47	39022	22500					
	54	116074	2.8	III	32.93	40430	22500					
	49	127741	2.6	III	36.24	41373	22500					
	43	145648	2.4	III	41.32	42572	22500					
	37	168454	2.4	III	47.79	43976	22500					
	32	198309	2.2	III	56.26	45437	22500					
	27	229363	1.9	II	65.07	46746	22500					
	25	248186	1.8	II	70.41	47336	22500					
	22	287030	1.5	II	81.43	48623	22500					
	20	315828	1.4	II	89.60	49298	22500					
	17	360171	1.2	I	102.18	49500	22500					
	15	416569	1.1	I	118.18	49500	22500					
	13	470676	0.9	*	133.53	49500	22500					
	12	543852	0.8	*	154.29	49500	22500					

(AGMA Class I = f_B 1.0 - 1.39 II = f_B 1.4 - 1.99 III = f_B ≥ 2.0 * = f_B < 1.0) **(Model Type in blue is an Energy Efficient motor)**

Send Quote Requests to info@automatedpt.com
Call +1(800)985-6929 To Order or Order Online At Nordgearmotors.com

DRIVESYSTEMS

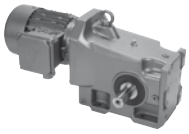



125 hp Gearmotors

Motor Power P_n [hp]	Output Speed n_2 [rpm]	Output Torque T_2 [lb-in]	Service Factor f_B	AGMA Class	Gear Ratio i_{tot}	Standard Bearings F_{RN} OHL [lb]	Standard Bearings F_{AN} Thrust [lb]	Heavy Duty Bearings (VL) F_{RVL} OHL [lb]	Heavy Duty Bearings (VL) F_{AVL} Thrust [lb]	Model Type	Weight [lb]	Dim. Page
125	222	35465	1.8	II	8.04	10422	13163	20288	8613	**SK 9082.1 - 280M/4**	2734	536
	145	54298	1.4	II	12.31	11048	13500	21375	9140	SK 9082.1 - 280MH/4		
	122	64443	1.8	II	14.61	11592	13500	21375	9608			
	103	76529	1.5	II	17.35	11750	13500	21375	9779			
	89	88924	1.3	I	20.16	11817	13500	21375	9839			
	80	98672	1.2	I	22.37	11826	13500	21375	9889			
	67	117815	1.0	I	26.71	11770	13500	21375	9824			
	57	137929	0.8	*	31.27	11516	13500	21375	9700			
	222	35464	3.0	III	8.04	13946	14625	26312	10343	**SK 9086.1 - 280M/4**	3285	540
	187	42124	2.7	III	9.55	14447	14625	27000	10697	SK 9086.1 - 280MH/4		
	154	51166	2.9	III	11.6	15174	14625	27000	11225			
	145	54298	2.3	III	12.31	15095	14625	27000	11187			
	121	64840	2.0	III	14.7	15563	14625	27000	11498			
	109	72251	2.3	III	16.38	16144	14625	27000	11950			
	101	78382	2.1	III	17.77	16202	14625	27000	12006			
	85	93158	1.9	II	21.12	16686	14625	27000	12357			
	71	111199	1.6	II	25.21	16983	14625	27000	12557			
	61	130210	1.4	II	29.52	17087	14625	27000	12679			
	50	156322	1.0	I	35.44	16868	14625	27000	12557			
	42	185831	1.0	I	42.13	16922	14625	27000	12598			
	36	221869	0.8	*	50.3	16493	14625	27000	12357			
	167	47108	3.1	III	10.68	35485	15617	36000	15491	**SK 9092.1 - 280M/4**	4542	544
	155	50946	3.1	III	11.55	35449	15750	36000	15750	SK 9092.1 - 280MH/4		
	127	62194	2.8	III	14.1	35332	15750	36000	15750			
	103	76132	2.4	III	17.26	35152	15750	36000	15750			
	88	89894	2.9	III	20.38	34938	15750	36000	15750			
	72	110008	2.6	III	24.94	34558	15750	36000	15750			
	61	129151	2.2	III	29.28	34121	15750	36000	15750			
	52	150632	1.9	II	34.15	33539	15750	36000	15750			
	46	172466	1.6	II	39.1	32841	15750	36000	15750			
	44	179303	1.6	II	40.65	32598	15750	36000	15750			
	36	219443	1.3	I	49.75	30944	15750	36000	15750			
	30	258744	1.1	I	58.66	28883	15750	36000	15750			
	26	303779	0.9	*	68.87	25844	15750	36000	15750			
	22	352872	0.8	*	80	21362	15750	36000	15750			
	63	125578	3.0	III	28.47	38194	22500			**SK 9096.1 - 280M/4**	5281	548
	54	145251	3.0	III	32.93	39481	22500			SK 9096.1 - 280MH/4		
	49	159851	2.8	III	36.24	40307	22500					
	43	182259	2.4	III	41.32	41364	22500					
	37	210797	2.1	III	47.79	42665	22500					
	32	248158	1.8	II	56.26	43688	22500					
	27	287018	1.5	II	65.07	44807	22500					
	25	310572	1.4	II	70.41	45272	22500					
	22	359180	1.2	I	81.43	46193	22500					

(AGMA Class I = f_B 1.0 - 1.39 II = f_B 1.4 - 1.99 III = f_B ≥ 2.0 * = f_B < 1.0) **(Model Type in blue is an Energy Efficient motor)**

Send Quote Requests to info@automatedpt.com
Call +1(800)985-6929 To Order or Order Online At Nordgearmotors.com

125 hp, 150 hp Gearmotors



DRIVESYSTEMS

Motor Power P_n [hp]	Output Speed n_2 [rpm]	Output Torque T_2 [lb-in]	Service Factor f_B	AGMA Class	Gear Ratio i_{tot}	Standard Bearings F_{RN} OHL [lb]	Standard Bearings F_{AN} Thrust [lb]	Heavy Duty Bearings (VL) F_{RVL} OHL [lb]	Heavy Duty Bearings (VL) F_{AVL} Thrust [lb]	Model Type	Weight [lb]	Dim. Page
125	20	395217	1.1	I	89.60	46625	22500			**SK 9096.1 - 280M/4**	5281	548
	17	450706	1.0	I	102.18	46937	22500			SK 9096.1 - 280MH/4		
	15	521281	0.8	*	118.18	47480	22500					
	13	588988	0.8	*	133.53	47306	22500					
150	222	42510	2.5	III	8.04	13568	14625	25643	10049	**SK 9086.1 - 315S/4**	3660	540
	187	50496	2.3	III	9.55	13988	14625	26417	10359	SK 9086.1 - 315SH/4		
	154	61336	2.5	III	11.6	14684	14625	27000	10852			
	145	65090	1.9	II	12.31	14499	14625	27000	10748			
	122	77727	1.7	II	14.7	14798	14625	27000	10994			
	109	86610	1.9	II	16.38	15426	14625	27000	11462			
	101	93960	1.8	II	17.77	15413	14625	27000	11423			
	85	111673	1.6	II	21.12	15739	14625	27000	11684			
	71	133299	1.3	I	25.21	15824	14625	27000	11741			
	61	156088	1.1	I	29.52	15779	14625	27000	11720			
	50	187391	0.9	*	35.44	15203	14625	27000	11369			
	42	222764	0.8	*	42.13	14985	14625	27000	11261			
	167	56471	2.6	III	10.68	35395	15296	36000	15172	**SK 9092.1 - 315S/4**	4917	544
	155	61071	2.6	III	11.55	35345	15568	36000	15444	SK 9092.1 - 315SH/4		
	127	74554	2.3	III	14.1	35174	15750	36000	15750			
	104	91263	2.0	III	17.26	34916	15750	36000	15750			
	88	107760	2.4	III	20.38	34605	15750	36000	15750			
	72	131871	2.1	III	24.94	34052	15750	36000	15750			
	61	154819	1.8	II	29.28	33413	15750	36000	15750			
	52	180570	1.6	II	34.15	32553	15750	36000	15750			
	46	206743	1.4	II	39.1	31514	15750	36000	15750			
	44	214939	1.3	I	40.65	31151	15750	36000	15750			
	36	263055	1.1	I	49.75	28627	15750	36000	15750			
	30	310167	0.9	*	58.66	25342	15750	36000	15750			
	26	364153	0.8	*	68.87	20079	15750	36000	15750			
	79	120286	2.6	III	22.75	35611	22500			**SK 9096.1 - 315S/4**	5656	548
	68	139115	2.6	III	26.31	36817	22500			SK 9096.1 - 315SH/4		
	63	150536	2.5	III	28.47	37366	22500					
	54	174119	2.5	III	32.93	38529	22500					
	49	191621	2.3	III	36.24	39242	22500					
	43	218481	2.0	III	41.32	40093	22500					
	37	252692	1.8	II	47.79	41135	22500					
	32	297477	1.5	II	56.26	41987	22500					
	27	344060	1.3	I	65.07	42824	22500					
	25	372296	1.2	I	70.41	43151	22500					
	22	430565	1.0	I	81.43	43664	22500					
	20	473764	0.9	*	89.60	43877	22500					
	17	540281	0.8	*	102.18	43749	22500					

(AGMA Class I = f_B 1.0 - 1.39 II = f_B 1.4 - 1.99 III = f_B ≥ 2.0 * = f_B < 1.0) **(Model Type in blue is an Energy Efficient motor)**

Send Quote Requests to info@automatedpt.com
Call +1(800)985-6929 To Order or Order Online At Nordgearmotors.com

DRIVESYSTEMS

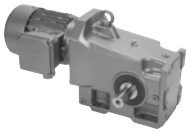



175 hp, 200 hp Gearmotors

Motor Power P_n [hp]	Output Speed n_2 [rpm]	Output Torque T_2 [lb-in]	Service Factor f_B	AGMA Class	Gear Ratio i_{tot}	Standard Bearings F_{RN} OHL [lb]	Standard Bearings F_{AN} Thrust [lb]	Heavy Duty Bearings (VL) F_{RVL} OHL [lb]	Heavy Duty Bearings (VL) F_{AVL} Thrust [lb]	Model Type	Weight [lb]	Dim. Page
175	223	49540	2.3	III	8.04	13192	14625	24941	9763	**SK 9086.1 - 315M/4**	3837	540
	187	58845	2.0	III	9.55	13514	14625	25632	10033	SK 9086.1 - 315MH/4		
	154	71476	2.1	III	11.6	14121	14625	26795	10460			
	145	75851	1.6	II	12.31	13928	14625	26442	10310			
	122	90578	1.5	II	14.7	14126	14625	26870	10460			
	109	100929	1.7	II	16.38	14715	14625	27000	10906			
	101	109494	1.5	II	17.77	14623	14625	27000	10836			
	85	130136	1.4	II	21.12	14841	14625	27000	10994			
	71	155338	1.1	I	25.21	14713	14625	27000	10940			
	61	181895	1.0	I	29.52	14425	14625	27000	10784			
	168	65807	2.4	III	10.68	35289	15003	36000	14884	**SK 9092.1 - 315M/4**	5094	544
	155	71168	2.3	III	11.55	35222	15224	36000	15100	SK 9092.1 - 315MH/4		
	127	86881	2.0	III	14.1	34988	15750	36000	15694			
	104	106352	1.7	II	17.26	34634	15750	36000	15750			
	88	125576	2.3	III	20.38	34209	15750	36000	15750			
	72	153674	1.8	II	24.94	33446	15750	36000	15750			
	61	180416	1.6	II	29.28	32558	15750	36000	15750			
	52	210424	1.3	I	34.15	31354	15750	36000	15750			
	44	250475	1.1	I	40.65	29358	15750	36000	15750			
	36	306547	0.9	*	49.75	25630	15750	36000	15750			
	31	361448	0.8	*	58.66	20399	15750	36000	15750			
	79	140180	2.9	III	22.75	34918	22500			**SK 9096.1 - 315M/4**	5832	548
	68	162116	2.7	III	26.31	36018	22500			SK 9096.1 - 315MH/4		
	63	175425	2.5	III	28.47	36482	22500					
	54	202906	2.2	III	32.93	37577	22500					
	49	223302	2.0	III	36.24	38176	22500					
	43	254604	1.7	II	41.32	38810	22500					
	37	294470	1.5	II	47.79	39724	22500					
	32	346660	1.3	I	56.26	40264	22500					
	28	400945	1.1	I	65.07	40865	22500					
	25	433849	1.0	I	70.41	40966	22500					
	22	501751	0.9	*	81.43	41159	22500					
	20	552093	0.8	*	89.60	41234	22500					
200	223	56617	2.0	III	8.04	12798	14625	24253	9486	**SK 9086.1 - 315MA/4**	4167	540
	187	67250	1.7	II	9.55	13082	14625	24779	9671	SK 9086.1 - 315MAH/4		
	154	81686	1.8	II	11.6	13601	14625	25862	10080			
	145	86685	1.4	II	12.31	13354	14625	25423	9873			
	122	103515	1.3	I	14.7	13358	14625	25601	9938			
	109	115346	1.5	II	16.38	13984	14625	26804	10377			
	101	125134	1.3	I	17.77	13808	14625	26501	10244			
	85	148724	1.2	I	21.12	13856	14625	26795	10343			
	71	177525	1.0	I	25.21	13545	14625	26375	10148			
	61	207876	0.9	*	29.52	13079	14207	25724	9842			

(AGMA Class I = f_B 1.0 - 1.39 II = f_B 1.4 - 1.99 III = f_B ≥ 2.0 * = f_B < 1.0) **(Model Type in blue is an Energy Efficient motor)**

Send Quote Requests to info@automatedpt.com
Call +1(800)985-6929 To Order or Order Online At Nordgearmotors.com

200 hp Gearmotors



DRIVESYSTEMS

Motor Power P_n [hp]	Output Speed n_2 [rpm]	Output Torque T_2 [lb-in]	Service Factor f_B	AGMA Class	Gear Ratio i_{tot}	Standard Bearings F_{RN} OHL [lb]	Standard Bearings F_{AN} Thrust [lb]	Heavy Duty Bearings (VL) F_{RVL} OHL [lb]	Heavy Duty Bearings (VL) F_{AVL} Thrust [lb]	Model Type	Weight [lb]	Dim. Page
200	168	75207	2.1	III	10.68	35165	14695	36000	14576	**SK 9092.1 - 315MA/4**	5424	544
	155	81334	2.0	III	11.55	35075	14933	36000	14767	SK 9092.1 - 315MAH/4		
	127	99290	1.7	II	14.1	34772	15395	36000	15271			
	104	121543	1.5	II	17.26	34304	15750	36000	15719			
	88	143513	2.0	III	20.38	33741	15750	36000	15750			
	72	175624	1.6	II	24.94	32731	15750	36000	15750			
	61	206186	1.4	II	29.28	31538	15750	36000	15750			
	52	240480	1.2	I	34.15	29900	15750	36000	15750			
	44	286252	1.0	I	40.65	27126	15750	36000	15750			
	36	350333	0.8	*	49.75	21634	15750	36000	15750			
	79	160202	2.6	III	22.75	34340	22500			**SK 9096.1 - 315MA/4**	6163	548
	68	185272	2.4	III	26.31	35282	22500			SK 9096.1 - 315MAH/4		
	63	200482	2.2	III	28.47	35654	22500					
	54	231889	1.9	II	32.93	36563	22500					
	49	255197	1.7	II	36.24	37105	22500					
	43	290970	1.5	II	41.32	37589	22500					
	37	336531	1.3	I	47.79	38239	22500					
	32	396175	1.1	I	56.26	38513	22500					
	28	458214	1.0	I	65.07	38977	22500					
	25	495818	0.9	*	70.41	38711	22500					
	22	573419	0.8	*	81.43	38579	22500					

GEARMOTORS

(AGMA Class I = f_B 1.0 - 1.39 II = f_B 1.4 - 1.99 III = f_B ≥ 2.0 * = f_B < 1.0) **(Model Type in blue is an Energy Efficient motor)**

Send Quote Requests to info@automatedpt.com
Call +1(800)985-6929 To Order or Order Online At Nordgearmotors.com

Send Quote Requests to info@automatedpt.com
Call +1(800)985-6929 To Order or Order Online At Nordgearmotors.com

Right-angle Helical-bevel Reducers
Selection & Combinations

Selection

- SK 92072
- SK 92172
- SK 92372
- SK 92672
- SK 9012.1
- SK 9013.1
- SK 9016.1
- SK 9017.1
- SK 92772
- SK 9022.1
- SK 9023.1
- SK 9032.1
- SK 9033.1
- SK 9042.1
- SK 9043.1
- SK 9052.1
- SK 9053.1
- SK 9072.1
- SK 9072.1/32
- SK 9072.1/42
- SK 9082.1
- SK 9082.1/42
- SK 9082.1/52
- SK 9086.1
- SK 9086.1/52
- SK 9092.1
- SK 9092.1/52
- SK 9096.1
- SK 9096.1/62
- SK 9096.1/63

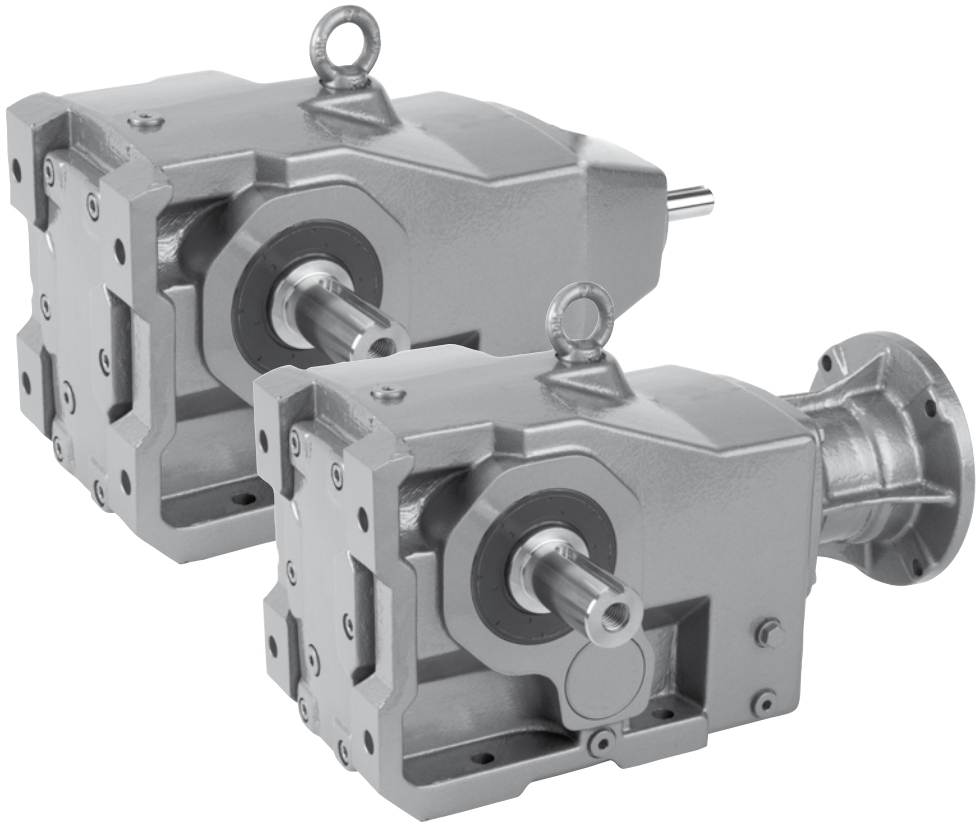

NORD® DRIVESYSTEMS

www.nord.com

UNICASE™

Model Type	Gear Ratio i_{tot}	Output Speed n_2 1750 rpm [rpm]	Output Torque* $T_{2\,max}$ [lb-in]	Max. Solid in 1750 rpm [hp]
SK 92772	4.81	364	3629	7.50
	5.43	322	3761	7.50
	6.11	286	3717	7.50
	6.41	273	3983	7.50
	7.60	230	4204	7.50
	8.55	205	4381	7.50
	9.63	182	4381	7.50
	10.88	161	4558	7.50
	12.43	141	4558	7.50
	13.91	126	4735	7.50
	15.60	112	5177	7.50
	17.83	98	5177	7.50
	19.73	89	5310	7.50
	22.22	79	5487	6.88
	25.39	69	5753	6.30





Send Quote Requests to info@automatedpt.com
Call +1(800)985-6929 To Order or Order Online At Nordgearmotors.com

SK 92072, SK 92172
NEMA-C + W
Ratings & Combinations

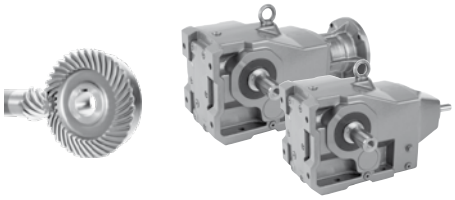

DRIVESYSTEMS

Model Type	Gear Ratio	Output Speed	Output Torque*	Maximum input power◈ Solid input shafts type "W"				NEMA C-Face* Available Combinations							
				Input Speed											
	i_{tot}	n_2 1750 rpm	$T_{2\,max}$	1750 rpm	1150 rpm	875 rpm	580 rpm								
		[rpm]	[lb-in]	[hp]	[hp]	[hp]	[hp]	56C	140TC	180TC	210TC	250TC	280TC	320TC	360TC
SK 92072	3.85	455	708	2.00	1.32	1.00	0.66	X	X						
	5.24	334	708	2.00	1.32	1.00	0.66	X	X						
	5.79	302	708	2.00	1.32	1.00	0.66	X	X						
	6.44	272	752	2.00	1.32	1.00	0.66	X	X						
	7.87	222	797	2.00	1.32	1.00	0.66	X	X						
	8.99	195	797	2.00	1.32	1.00	0.66	X	X						
	9.68	181	797	2.00	1.32	1.00	0.66	X	X						
	11.06	158	797	2.00	1.32	1.00	0.66	X	X*						
	13.55	129	664	1.36	0.90	0.68	0.45	X	X*						
	17.56	100	531	0.84	0.56	0.42	0.28	X*	X*						
	20.37	86	797	1.09	0.72	0.54	0.36	X	X*						
	23.28	75	797	0.95	0.63	0.47	0.31	X*	X*						
	26.39	66	797	0.83	0.55	0.42	0.28	X*	X*						
	30.15	58	620	0.57	0.38	0.29	0.19	X*	X*						
	34.73	50	664	0.53	0.35	0.26	0.17	X*							
	39.67	44	708	0.49	0.33	0.25	0.16	X*							
	47.83	37	398	0.23	0.15	0.12	0.08	X*							
	54.65	32	443	0.22	0.15	0.11	0.07	X*							
SK 92172	4.10	427	664	2.00	1.32	1.00	0.66	X	X						
	4.77	367	708	2.00	1.32	1.00	0.66	X	X						
	5.33	328	752	2.00	1.32	1.00	0.66	X	X						
	6.04	290	797	2.00	1.32	1.00	0.66	X	X						
	7.04	249	841	2.00	1.32	1.00	0.66	X	X						
	8.01	218	885	2.00	1.32	1.00	0.66	X	X						
	9.07	193	929	2.00	1.32	1.00	0.66	X	X						
	10.37	169	974	2.00	1.32	1.00	0.66	X	X						
	11.81	148	1018	2.00	1.32	1.00	0.66	X	X						
	13.49	130	1062	2.00	1.32	1.00	0.66	X	X						
	15.61	112	1062	1.89	1.25	0.94	0.62	X	X*						
	18.79	93	752	1.11	0.73	0.56	0.37	X	X*						
	22.78	77	1062	1.30	0.86	0.65	0.43	X	X*						
	26.03	67	1062	1.13	0.75	0.56	0.37	X	X*						
	28.24	62	1062	1.04	0.69	0.52	0.34	X	X*						
	32.27	54	1062	0.91	0.60	0.45	0.30	X*	X*						
	36.11	48	885	0.67	0.44	0.34	0.22	X*	X*						
	41.26	42	1018	0.68	0.45	0.34	0.22	X*	X*						
	46.90	37	664	0.39	0.26	0.19	0.13	X*							
	53.59	33	797	0.42	0.28	0.21	0.14	X*							
	63.29	28	443	0.20	0.13	0.10	0.06	X*							
	72.31	24	487	0.19	0.12	0.09	0.06	X*							

W + NEMA

* Caution - The motor power may exceed the gear unit's mechanical torque capacity
◈ The mechanical power limit of the solid input shaft type "W" may limit the reducer rating.
All ratings are mechanical. See page 14 for thermal considerations.

lb	W	56C	140TC
SK 92072	15	24	24
SK 92172	26	35	35

Send Quote Requests to info@automatedpt.com
Call +1(800)985-6929 To Order or Order Online At Nordgearmotors.com

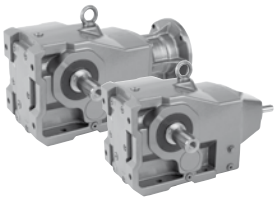



SK 92372, SK 92672 NEMA-C + W Ratings & Combinations

Model Type	Gear Ratio i_{tot}	Output Speed n_2 1750 rpm [rpm]	Output Torque* $T_{2\,max}$ [lb-in]	Maximum input power◈ Solid input shafts type "W" Input Speed 1750 rpm [hp]	1150 rpm [hp]	875 rpm [hp]	580 rpm [hp]	NEMA C-Face* Available Combinations 56C	140TC	180TC	210TC	250TC	280TC	320TC	360TC
SK 92372	5.30	330	1283	6.72	4.43	3.36	2.22	X	X	X					
	5.97	293	1372	6.38	4.21	3.19	2.10	X	X	X					
	6.49	270	1416	6.07	4.00	3.03	2.00	X	X	X					
	7.32	239	1460	5.54	3.65	2.77	1.83	X	X	X					
	8.29	211	1549	5.19	3.42	2.59	1.71	X	X	X					
	9.47	185	1549	4.55	3.00	2.27	1.50	X	X	X*					
	10.84	161	1593	4.07	2.69	2.03	1.34	X	X	X*					
	11.39	154	1726	4.22	2.78	2.11	1.39	X	X	X*					
	13.01	135	1726	3.70	2.44	1.85	1.22	X	X	X*					
	14.65	119	1682	3.17	2.10	1.59	1.05	X	X						
	17.06	103	2036	3.33	2.20	1.66	1.10	X	X	X*					
	19.21	91	2036	2.94	1.94	1.47	0.97	X	X	X*					
	21.95	80	1726	2.19	1.45	1.10	0.72	X	X	X*					
	24.33	72	1859	2.12	1.40	1.06	0.70	X	X						
	27.41	64	2036	2.07	1.36	1.03	0.68	X	X						
	31.32	56	1682	1.49	0.99	0.75	0.49	X	X*						
	33.80	52	1637	1.35	0.89	0.68	0.45	X	X*						
	38.62	45	1682	1.20	0.79	0.60	0.40	X	X*						
	43.52	40	1328	0.84	0.56	0.42	0.28	X*	X*						
	49.73	35	1505	0.84	0.55	0.42	0.28	X*	X*						
	55.00	32	974	0.49	0.33	0.25	0.16	X*							
	62.85	28	1106	0.49	0.32	0.25	0.16	X*							
SK 92672	4.85	361	2345	7.50	4.95	3.75	2.48	X	X	X	X*				
	5.46	321	2345	7.50	4.95	3.75	2.48	X	X	X	X*				
	5.92	296	2478	7.50	4.95	3.75	2.48			X	X*				
	6.78	258	2611	7.50	4.95	3.75	2.48			X	X*				
	7.73	226	2744	7.50	4.95	3.75	2.48			X	X*				
	8.71	201	2832	7.50	4.95	3.75	2.48	X	X	X	X*				
	9.78	179	2832	7.50	4.95	3.75	2.48	X	X	X	X*				
	11.02	159	2965	7.48	4.94	3.74	2.47	X	X	X	X*				
	12.64	138	3009	6.59	4.35	3.29	2.17	X	X	X	X*				
	14.08	124	3009	5.92	3.91	2.96	1.95	X	X	X	X*				
	16.08	109	3275	5.66	3.74	2.83	1.87	X	X	X	X*				
	18.08	97	2832	4.36	2.88	2.18	1.44			X*	X*				
	20.37	86	3009	4.11	2.71	2.05	1.35			X*	X*				
	23.28	75	3275	3.90	2.57	1.95	1.29			X*	X*				
	26.55	66	2921	3.06	2.02	1.53	1.01	X	X	X*					
	29.91	59	3009	2.82	1.86	1.41	0.93	X	X	X*					
	34.17	51	3363	2.72	1.80	1.36	0.90	X	X	X*					
	37.32	47	2921	2.18	1.44	1.09	0.72	X	X						
	42.04	42	3009	2.01	1.32	1.00	0.66	X	X						
	48.03	36	3319	1.90	1.25	0.95	0.63	X	X*						
	51.86	34	3053	1.65	1.09	0.82	0.54	X	X*						
	59.25	30	3319	1.58	1.04	0.79	0.52	X	X*						

* Caution - The motor power may exceed the gear unit's mechanical torque capacity
◈ The mechanical power limit of the solid input shaft type "W" may limit the reducer rating.
All ratings are mechanical. See page 14 for thermal considerations.

lb	W	56C	140TC	180TC	210TC
SK 92372	40	49	49	60	-
SK 92672	79	86	86	97	112

Send Quote Requests to info@automatedpt.com
Call +1(800)985-6929 To Order or Order Online At Nordgearmotors.com

SK 9012.1, SK 9013.1
NEMA-C + W
Ratings & Combinations

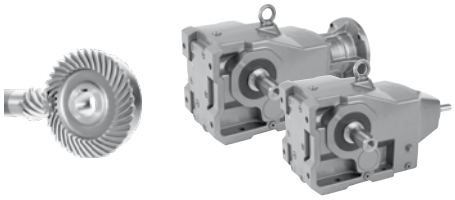

Model Type	Gear Ratio	Output Speed	Output Torque*	Maximum input power◈ Solid input shafts type "W"				NEMA C-Face* Available Combinations							
				Input Speed											
	i_{tot}	n_2 1750 rpm	$T_{2\,max}$	1750 rpm	1150 rpm	875 rpm	580 rpm								
		[rpm]	[lb-in]	[hp]	[hp]	[hp]	[hp]	56C	140TC	180TC	210TC	250TC	280TC	320TC	360TC
SK 9012.1	8.09	216	1593	5.00	3.30	2.50	1.65	X	X	X					
	9.23	190	1726	5.00	3.30	2.50	1.65	X	X	X					
	10.85	161	1770	4.52	2.98	2.26	1.49	X	X	X*					
	12.23	143	1947	4.42	2.92	2.21	1.46	X	X	X*					
	15.30	114	3363	5.00	3.30	2.50	1.65	X	X	X					
	17.45	100	3363	5.00	3.30	2.50	1.65	X	X	X					
	20.87	84	3540	4.72	3.11	2.36	1.56	X	X	X*					
	24.53	71	3540	3.99	2.63	1.99	1.32	X	X	X*					
	27.65	63	3540	3.54	2.34	1.77	1.17	X	X	X*					
	31.45	56	3540	3.15	2.08	1.57	1.04	X	X	X*					
	34.81	50	3540	2.81	1.85	1.40	0.93	X	X	X*					
	41.65	42	3540	2.36	1.56	1.18	0.78	X	X	X*					
	48.95	36	3540	2.02	1.33	1.01	0.67	X	X*	X*					
	55.17	32	3540	1.80	1.19	0.90	0.59	X	X*	X*					
	62.74	28	3540	1.57	1.04	0.79	0.52	X	X*	X*					
	76.53	23	3540	1.29	0.85	0.65	0.43	X	X*	X*					
	86.00	20	3540	1.12	0.74	0.56	0.37	X	X*						
	97.36	18	3540	1.01	0.67	0.51	0.33	X*	X*						
	109.79	16	3540	0.90	0.59	0.45	0.30	X*	X*						
	123.48	14	3540	0.79	0.52	0.39	0.26	X*							
	140.70	12	3540	0.67	0.44	0.34	0.22	X*							
	166.59	11	3540	0.62	0.41	0.31	0.20	X*							
	183.10	9.6	3540	0.54	0.36	0.27	0.18	X*	X*						
	205.93	8.5	3540	0.48	0.32	0.24	0.16	X*							
	246.37	7.1	3540	0.40	0.26	0.20	0.13	X*							
	280.71	6.2	3540	0.35	0.23	0.17	0.11	X*							
	332.37	5.3	3540	0.30	0.20	0.15	0.10	X*							
SK 9013.1	**141.29**	12	3540	0.50	0.33	0.25	0.17	X*							
	177.88	9.8	3540	0.50	0.33	0.25	0.17	X*							
	212.83	8.2	3540	0.46	0.30	0.23	0.15	X*							
	281.92	6.2	3540	0.35	0.23	0.17	0.11	X*							
	320.60	5.5	3540	0.31	0.20	0.15	0.10	X*							
	439.46	4.0	3540	0.22	0.15	0.11	0.07	X*							
	589.96	3.0	3540	0.17	0.11	0.08	0.06	X*							
	667.89	2.6	3540	0.15	0.10	0.07	0.05	X*							
	847.07	2.1	3540	0.12	0.08	0.06	0.04	X*							
	1256.07	1.4	3540	0.08	0.05	0.04	0.03	X*							
	1412.68	1.2	3540	0.07	0.04	0.03	0.02	X*							
	1690.10	1.0	3540	0.06	0.04	0.03	0.02	X*							

* Caution - The motor power may exceed the gear unit's mechanical torque capacity
◈ The mechanical power limit of the solid input shaft type "W" may limit the reducer rating.
All ratings are mechanical. See page 14 for thermal considerations.

lb	W	56C	140TC	180TC
SK 9012.1	75	86	86	101
SK 9013.1	86	90	-	-

Send Quote Requests to info@automatedpt.com
Call +1(800)985-6929 To Order or Order Online At Nordgearmotors.com

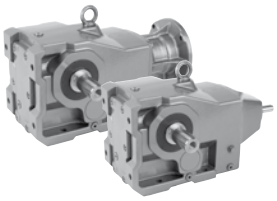



SK 9016.1, SK 9017.1 NEMA-C + W Ratings & Combinations

Model Type	Gear Ratio i_{tot}	Output Speed n_2 1750 rpm [rpm]	Output Torque* $T_{2\,max}$ [lb-in]	Maximum input power◈ Solid input shafts type "W" Input Speed 1750 rpm [hp]	1150 rpm [hp]	875 rpm [hp]	580 rpm [hp]	NEMA C-Face* Available Combinations 56C	140TC	180TC	210TC	250TC	280TC	320TC	360TC
SK 9016.1	12.51	140	4602	5.00	3.30	2.50	1.65	X	X	X					
	15.10	116	4602	5.00	3.30	2.50	1.65	X	X	X					
	17.45	100	4779	5.00	3.30	2.50	1.65	X	X	X					
	20.51	85	5133	5.00	3.30	2.50	1.65	X	X	X					
	23.11	76	4602	5.00	3.30	2.50	1.65	X	X	X					
	26.29	67	5310	5.00	3.30	2.50	1.65	X	X	X					
	30.52	57	5310	4.80	3.17	2.40	1.58	X	X	X*					
	34.81	50	5310	4.21	2.78	2.11	1.39	X	X	X*					
	40.92	43	5310	3.62	2.39	1.81	1.20	X	X	X*					
	46.11	38	5399	3.25	2.15	1.63	1.07	X	X	X*					
	52.44	33	5399	2.83	1.87	1.41	0.93	X	X	X*					
	63.97	27	5399	2.31	1.53	1.16	0.76	X	X	X*					
	71.88	24	5310	2.02	1.33	1.01	0.67	X	X						
	81.38	22	5310	1.85	1.22	0.93	0.61	X	X*						
	91.77	19	4425	1.33	0.88	0.67	0.44	X	X*						
	116.52	15	5399	1.28	0.85	0.64	0.42	X	X*						
	142.41	12	5399	1.03	0.68	0.51	0.34	X	X*						
	149.81	12	5399	1.03	0.68	0.51	0.34	X	X*						
	183.10	9.6	5399	0.82	0.54	0.41	0.27	X*	X*						
	205.93	8.5	5399	0.73	0.48	0.36	0.24	X*							
	234.64	7.5	5222	0.62	0.41	0.31	0.21	X*							
	277.84	6.3	5222	0.52	0.34	0.26	0.17	X*							
SK 9017.1	**134.32**	13	3806	0.50	0.33	0.25	0.17	X*							
	177.89	9.8	5045	0.50	0.33	0.25	0.17	X*							
	235.64	7.4	5399	0.50	0.33	0.25	0.17	X*							
	267.99	6.5	5399	0.50	0.33	0.25	0.17	X*							
	367.33	4.8	5399	0.41	0.27	0.21	0.14	X*							
	493.12	3.5	5399	0.30	0.20	0.15	0.10	X*							
	558.25	3.1	5399	0.27	0.18	0.13	0.09	X*							
	629.56	2.8	5399	0.24	0.16	0.12	0.08	X*							
	1256.07	1.4	5399	0.12	0.08	0.06	0.04	X*							
	1412.69	1.2	5399	0.10	0.07	0.05	0.03	X*							

* Caution - The motor power may exceed the gear unit's mechanical torque capacity
◈ The mechanical power limit of the solid input shaft type "W" may limit the reducer rating.
All ratings are mechanical. See page 14 for thermal considerations.

lb	W	56C	140TC	180TC
SK 9016.1	77	88	88	104
SK 9017.1	88	93	-	-

Send Quote Requests to info@automatedpt.com
Call +1(800)985-6929 To Order or Order Online At Nordgearmotors.com

SK 92772
NEMA-C + W
Ratings & Combinations

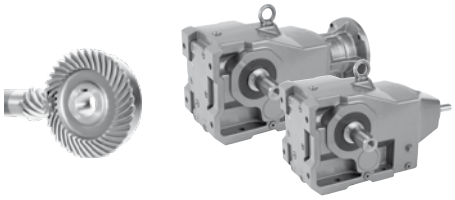

DRIVESYSTEMS

Model Type	Gear Ratio	Output Speed	Output Torque*	Maximum input power◈ Solid input shafts type "W"				NEMA C-Face* Available Combinations							
				Input Speed											
	i_{tot}	n_2 1750 rpm	$T_{2\,max}$	1750 rpm	1150 rpm	875 rpm	580 rpm								
		[rpm]	[lb-in]	[hp]	[hp]	[hp]	[hp]	56C	140TC	180TC	210TC	250TC	280TC	320TC	360TC
SK 92772	4.81	364	3629	7.50	4.95	3.75	2.48			X	X*	X*			
	5.43	322	3761	7.50	4.95	3.75	2.48			X	X*	X*			
	6.11	286	3717	7.50	4.95	3.75	2.48			X	X*	X*			
	6.41	273	3983	7.50	4.95	3.75	2.48			X	X*	X*			
	7.60	230	4204	7.50	4.95	3.75	2.48			X	X*	X*			
	8.55	205	4381	7.50	4.95	3.75	2.48			X	X*	X*			
	9.63	182	4381	7.50	4.95	3.75	2.48			X	X*	X*			
	10.88	161	4558	7.50	4.95	3.75	2.48	X	X	X	X*				
	12.43	141	4558	7.50	4.95	3.75	2.48	X	X	X	X*				
	13.91	126	4735	7.50	4.95	3.75	2.48	X	X	X	X*				
	15.60	112	5177	7.50	4.95	3.75	2.48	X	X	X	X*				
	17.83	98	5177	7.50	4.95	3.75	2.48	X	X	X	X*				
	19.73	89	5310	7.50	4.95	3.75	2.47			X	X*				
	22.22	79	5487	6.88	4.54	3.44	2.27			X	X*				
	25.39	69	5753	6.30	4.16	3.15	2.08			X	X*				
	28.44	62	5310	5.22	3.45	2.61	1.72	X	X	X	X*				
	32.04	55	5576	4.87	3.21	2.43	1.61	X	X	X*	X*				
	36.61	48	5841	4.45	2.94	2.22	1.47	X	X	X*	X*				
	40.77	43	3983	2.72	1.79	1.36	0.90	X	X						
	45.93	38	4469	2.69	1.78	1.35	0.89	X	X						
	52.48	33	5089	2.66	1.76	1.33	0.88	X	X						
	56.02	31	3540	1.74	1.15	0.87	0.57	X	X*						
	64.01	27	4071	1.74	1.15	0.87	0.58	X	X*						

W + NEMA

* Caution - The motor power may exceed the gear unit's mechanical torque capacity
◈ The mechanical power limit of the solid input shaft type "W" may limit the reducer rating.
All ratings are mechanical. See page 14 for thermal considerations.

lb	W	56C	140TC	180TC	210TC	250TC
SK 92772	99	101	101	112	128	128

Send Quote Requests to info@automatedpt.com
Call +1(800)985-6929 To Order or Order Online At Nordgearmotors.com

Send Quote Requests to info@automatedpt.com
Call +1(800)985-6929 To Order or Order Online At Nordgearmotors.com

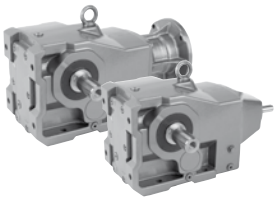



SK 9022.1 , SK 9023.1
NEMA-C + W
Ratings & Combinations

Model Type	Gear Ratio i_{tot}	Output Speed n_2 1750 rpm [rpm]	Output Torque* $T_{2\,max}$ [lb-in]	Maximum input power◈ Solid input shafts type "W" Input Speed 1750 rpm [hp]	1150 rpm [hp]	875 rpm [hp]	580 rpm [hp]	NEMA C-Face* Available Combinations 56C	140TC	180TC	210TC	250TC	280TC	320TC	360TC
SK 9022.1	8.78	199	4248	5.00	3.30	2.50	1.65	X	X	X					
	11.13	157	4602	5.00	3.30	2.50	1.65	X	X	X					
	12.51	140	4779	5.00	3.30	2.50	1.65	X	X	X					
	14.56	120	5133	5.00	3.30	2.50	1.65	X	X	X					
	16.30	107	5487	5.00	3.30	2.50	1.65	X	X	X					
	17.52	100	6372	5.00	3.30	2.50	1.65	X	X	X					
	19.93	88	6726	5.00	3.30	2.50	1.65	X	X	X					
	22.41	78	6903	5.00	3.30	2.50	1.65	X	X	X					
	24.56	71	7611	5.00	3.30	2.50	1.65	X	X	X					
	26.07	67	7611	5.00	3.30	2.50	1.65	X	X	X					
	29.20	60	7611	5.00	3.30	2.50	1.65	X	X	X					
	31.38	56	7257	5.00	3.30	2.50	1.65	X	X	X					
	33.26	53	7611	5.00	3.30	2.50	1.65	X	X	X					
	39.77	44	7611	5.00	3.30	2.50	1.65	X	X	X					
	44.71	39	7611	4.71	3.11	2.35	1.55	X	X	X*					
	49.01	36	7611	4.35	2.87	2.17	1.43	X	X	X*					
	52.02	34	7611	4.11	2.71	2.05	1.35	X	X	X*					
	58.25	30	7611	3.62	2.39	1.81	1.20	X	X	X*					
	66.42	26	7611	3.14	2.07	1.57	1.04	X	X	X*					
	78.89	22	7611	2.66	1.75	1.33	0.88	X	X	X*					
	85.11	21	7611	2.54	1.67	1.27	0.84	X	X						
	98.88	18	7611	2.17	1.43	1.09	0.72	X	X						
	115.74	15	7611	1.81	1.20	0.91	0.60	X	X*						
	137.57	13	7611	1.57	1.04	0.78	0.52	X	X*						
	169.81	10	7611	1.21	0.80	0.60	0.40	X	X*						
	184.46	9.5	7611	1.15	0.76	0.57	0.38	X	X*						
	219.25	8.0	7611	0.97	0.64	0.48	0.32	X*	X*						
	232.92	7.5	6195	0.74	0.49	0.37	0.24	X*							
	276.86	6.3	7080	0.71	0.47	0.35	0.23	X*							
SK 9023.1	**228.47**	7.7	5753	0.70	0.46	0.35	0.23	X*							
	297.67	5.9	7611	0.71	0.47	0.36	0.24	X*							
	339.41	5.2	7611	0.63	0.41	0.31	0.21	X*							
	472.43	3.7	7611	0.45	0.29	0.22	0.15	X*							
	561.55	3.1	7611	0.37	0.25	0.19	0.12	X*							
	678.31	2.6	7611	0.31	0.21	0.16	0.10	X*							
	753.86	2.3	7611	0.28	0.18	0.14	0.09	X*							
	951.94	1.8	7611	0.22	0.14	0.11	0.07	X*							
	1120.38	1.6	7611	0.19	0.13	0.10	0.06	X*							
	1504.07	1.2	7611	0.14	0.10	0.07	0.05	X*							
	1899.26	0.92	7611	0.11	0.07	0.06	0.04	X*							

* Caution - The motor power may exceed the gear unit's mechanical torque capacity
◈ The mechanical power limit of the solid input shaft type "W" may limit the reducer rating.
All ratings are mechanical. See page 14 for thermal considerations.

lb	W	56C	140TC	180TC
SK 9022.1	93	104	104	119
SK 9023.1	104	108	-	-

Send Quote Requests to info@automatedpt.com
Call +1(800)985-6929 To Order or Order Online At Nordgearmotors.com

SK 9032.1, SK 9033.1
NEMA-C + W
Ratings & Combinations

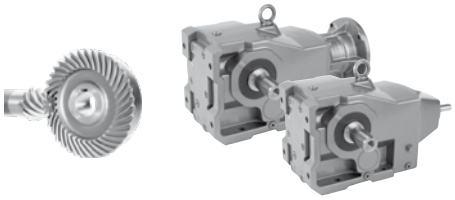

DRIVESYSTEMS

Model Type	Gear Ratio	Output Speed	Output Torque*	Maximum input power◈ Solid input shafts type "W"				NEMA C-Face* Available Combinations							
				Input Speed											
	i_{tot}	n_2 1750 rpm	$T_{2\,max}$	1750 rpm	1150 rpm	875 rpm	580 rpm								
		[rpm]	[lb-in]	[hp]	[hp]	[hp]	[hp]	56C	140TC	180TC	210TC	250TC	280TC	320TC	360TC
SK 9032.1	8.48	206	7788	10.00	6.60	5.00	3.30	X	X	X	X				
	10.73	163	7965	10.00	6.60	5.00	3.30	X	X	X	X				
	12.68	138	8850	10.00	6.60	5.00	3.30	X	X	X	X				
	13.49	130	11948	10.00	6.60	5.00	3.30	X	X	X	X				
	16.04	109	12390	10.00	6.60	5.00	3.30	X	X	X	X				
	17.08	102	12833	10.00	6.60	5.00	3.30	X	X	X	X				
	20.23	87	13275	10.00	6.60	5.00	3.30	X	X	X	X				
	23.91	73	13718	10.00	6.60	5.00	3.30	X	X	X	X				
	25.03	70	13275	10.00	6.60	5.00	3.30	X	X	X	X				
	29.66	59	13275	10.00	6.60	5.00	3.30	X	X	X	X				
	35.61	49	13718	10.00	6.60	5.00	3.30	X	X	X	X				
	38.05	46	13718	10.00	6.60	5.00	3.30	X	X	X	X*				
	40.36	43	13718	9.36	6.18	4.68	3.09	X	X	X	X*				
	47.70	37	13718	8.05	5.32	4.03	2.66	X	X	X	X*				
	49.94	35	13718	7.62	5.03	3.81	2.51	X	X	X	X*				
	59.17	30	13718	6.53	4.31	3.26	2.15	X	X	X	X*				
	64.08	27	13718	5.88	3.88	2.94	1.94	X	X	X	X*				
	75.91	23	13718	5.01	3.30	2.50	1.65	X	X	X*	X*				
	84.17	21	13718	4.57	3.02	2.29	1.51	X	X	X*	X*				
	93.50	19	13718	4.14	2.73	2.07	1.36	X	X	X*					
	110.77	16	13718	3.48	2.30	1.74	1.15	X	X	X*					
	117.70	15	13718	3.26	2.15	1.63	1.08	X	X						
	139.44	13	13718	2.83	1.87	1.41	0.93	X	X						
	158.74	11	13718	2.39	1.58	1.20	0.79	X	X	X*					
	188.06	9.3	13718	2.02	1.34	1.01	0.67	X	X*	X*					
	197.45	8.9	13718	1.94	1.28	0.97	0.64	X	X*						
	233.92	7.5	13718	1.63	1.08	0.82	0.54	X	X*						
	249.72	7.0	13718	1.52	1.01	0.76	0.50	X	X*						
	295.85	5.9	13718	1.28	0.85	0.64	0.42	X	X*						
SK 9033.1	167.45	10	13718	1.50	0.99	0.75	0.50	X	X*	X*					
	214.83	8.1	13718	1.50	0.99	0.75	0.50	X	X*	X*					
	267.65	6.5	13718	1.41	0.93	0.71	0.47	X	X*						
	352.25	5.0	13718	1.09	0.72	0.54	0.36	X	X*						
	398.77	4.4	13718	0.96	0.63	0.48	0.32	X*	X*						
	539.10	3.2	13718	0.70	0.46	0.35	0.23	X*							
	691.55	2.5	13718	0.54	0.36	0.27	0.18	X*							
	873.65	2.0	13718	0.44	0.29	0.22	0.14	X*							
	1149.80	1.5	13718	0.33	0.22	0.16	0.11	X*							
	1361.37	1.3	13718	0.28	0.19	0.14	0.09	X*							
	1822.00	0.96	13718	0.21	0.14	0.10	0.07	X*							
	2428.14	0.72	13718	0.16	0.10	0.08	0.05	X*							
	3635.95	0.48	13718	0.10	0.07	0.05	0.03	X*							

* Caution - The motor power may exceed the gear unit's mechanical torque capacity
◈ The mechanical power limit of the solid input shaft type "W" may limit the reducer rating.
All ratings are mechanical. See page 14 for thermal considerations.

lb	W	56C	140TC	180TC	210TC
SK 9032.1	150	154	154	163	183
SK 9033.1	154	165	165	-	-

Send Quote Requests to info@automatedpt.com
Call +1(800)985-6929 To Order or Order Online At Nordgearmotors.com

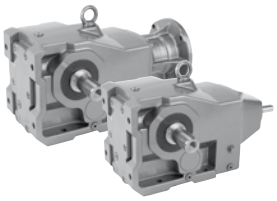



SK 9042.1, SK 9043.1 NEMA-C + W Ratings & Combinations

Model Type	Gear Ratio i_{tot}	Output Speed n_2 1750 rpm [rpm]	Output Torque* $T_{2\,max}$ [lb-in]	Maximum input power◈ Solid input shafts type "W" Input Speed 1750 rpm [hp]	1150 rpm [hp]	875 rpm [hp]	580 rpm [hp]	NEMA C-Face* Available Combinations 56C	140TC	180TC	210TC	250TC	280TC	320TC	360TC
SK 9042.1	8.83	198	12390	20.00	13.20	10.00	6.60			X	X	X			
	9.39	186	13275	20.00	13.20	10.00	6.60			X	X	X	X*		
	10.21	171	13275	20.00	13.20	10.00	6.60			X	X	X			
	11.40	154	13275	20.00	13.20	10.00	6.60	X	X	X	X	X	X*		
	13.40	131	17700	20.00	13.20	10.00	6.60	X	X	X	X	X	X*		
	15.66	112	17700	20.00	13.20	10.00	6.60	X	X	X	X	X	X*		
	18.20	96	21683	20.00	13.20	10.00	6.60			X	X	X			
	20.32	86	23010	20.00	13.20	10.00	6.60	X	X	X	X	X	X*		
	23.89	73	23895	20.00	13.20	10.00	6.60	X	X	X	X	X	X*		
	27.91	63	24780	20.00	13.20	10.00	6.60	X	X	X	X	X	X*		
	31.70	55	24780	20.00	13.20	10.00	6.60	X	X	X	X				
	34.39	51	24780	20.00	13.20	10.00	6.60	X	X	X	X	X*			
	40.54	43	24780	16.91	11.16	8.45	5.58	X	X	X	X	X*	X*		
	47.67	37	24780	14.55	9.60	7.27	4.80	X	X	X	X	X*	X*		
	55.69	31	24780	12.19	8.04	6.09	4.02	X	X	X	X	X*	X*		
	63.25	28	24780	11.01	7.27	5.50	3.63	X	X	X	X				
	68.61	26	24780	10.22	6.75	5.11	3.37	X	X	X	X	X*			
	76.18	23	24780	9.04	5.97	4.52	2.98	X	X	X	X*				
	86.43	20	24780	7.86	5.19	3.93	2.59	X	X	X	X*				
	95.56	18	24780	7.08	4.67	3.54	2.34	X	X	X	X*				
	117.79	15	21240	5.06	3.34	2.53	1.67	X	X	X*					
	132.79	13	24780	5.11	3.37	2.56	1.69			X	X*				
	159.94	11	24780	4.32	2.85	2.16	1.43			X*	X*				
	165.24	11	13275	2.32	1.53	1.16	0.76	X	X						
	195.12	9.0	24780	3.54	2.34	1.77	1.17	X	X	X*					
	235.01	7.4	24780	2.91	1.92	1.45	0.96	X	X	X*					
	273.73	6.4	24780	2.52	1.66	1.26	0.83	X	X						
	329.69	5.3	24780	2.08	1.38	1.04	0.69	X	X						
SK 9043.1	172.08	10	24780	3.00	1.98	1.50	0.99	X	X	X*					
	204.38	8.6	24780	3.00	1.98	1.50	0.99	X	X	X*					
	279.60	6.3	24780	2.48	1.63	1.24	0.82	X	X	X*					
	350.72	5.0	24780	1.97	1.30	0.98	0.65	X	X*	X*					
	404.82	4.3	24780	1.69	1.12	0.85	0.56	X	X*	X*					
	568.04	3.1	24780	1.22	0.80	0.61	0.40	X	X*						
	645.18	2.7	24780	1.06	0.70	0.53	0.35	X	X*						
	881.60	2.0	24780	0.79	0.52	0.39	0.26	X*	X*						
	1113.24	1.6	24780	0.63	0.42	0.31	0.21	X*	X*						
	1517.17	1.2	24780	0.47	0.31	0.24	0.16	X*	X*						
	2128.35	0.82	24780	0.32	0.21	0.16	0.11	X*	X*						
	2397.14	0.73	24780	0.29	0.19	0.14	0.09	X*	X*						
	3026.98	0.58	24780	0.23	0.15	0.11	0.08	X*	X*						
	3362.82	0.52	24780	0.20	0.13	0.10	0.07	X*	X*						
	4246.38	0.41	24780	0.16	0.11	0.08	0.05	X*	X*						

* Caution - The motor power may exceed the gear unit's mechanical torque capacity
◈ The mechanical power limit of the solid input shaft type "W" may limit the reducer rating.
All ratings are mechanical. See page 14 for thermal considerations.

lb	W	56C	140TC	180TC	210TC	250TC
SK 9042.1	276	265	265	280	311	333
SK 9043.1	287	291	291	300	-	-

Send Quote Requests to info@automatedpt.com
Call +1(800)985-6929 To Order or Order Online At Nordgearmotors.com

SK 9052.1, SK 9053.1
NEMA-C + W
Ratings & Combinations

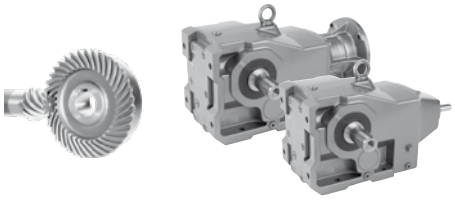

Model Type	Gear Ratio i_{tot}	Output Speed n_2 1750 rpm [rpm]	Output Torque* $T_{2\,max}$ [lb-in]	Maximum input power◈ Solid input shafts type "W" Input Speed 1750 rpm [hp]	1150 rpm [hp]	875 rpm [hp]	580 rpm [hp]	NEMA C-Face* Available Combinations 56C	140TC	180TC	210TC	250TC	280TC	320TC	360TC
SK 9052.1	8.10	216	23010	30.00	19.80	15.00	9.90					X	X		
	9.40	186	23010	30.00	19.80	15.00	9.90					X	X		
	9.93	176	24780	30.00	19.80	15.00	9.90					X	X		
	10.71	163	25665	30.00	19.80	15.00	9.90					X	X		
	11.88	147	34515	30.00	19.80	15.00	9.90			X	X	X	X		
	13.45	130	38055	30.00	19.80	15.00	9.90			X	X	X	X		
	16.33	107	38055	30.00	19.80	15.00	9.90	X	X	X	X	X	X		
	17.94	98	38055	30.00	19.80	15.00	9.90					X	X		
	19.91	88	38055	30.00	19.80	15.00	9.90			X	X	X	X		
	22.53	78	38055	30.00	19.80	15.00	9.90			X	X	X	X		
	23.33	75	38055	30.00	19.80	15.00	9.90	X	X	X	X	X	X		
	27.35	64	40710	30.00	19.80	15.00	9.90	X	X	X	X	X	X		
	31.28	56	42480	30.00	19.80	15.00	9.90	X	X	X	X	X	X		
	36.21	48	42480	30.00	19.80	15.00	9.90	X	X	X	X	X	X		
	39.72	44	42480	29.66	19.57	14.83	9.79			X	X	X	X*		
	44.96	39	42480	26.29	17.35	13.14	8.67			X	X	X	X*		
	54.56	32	42480	21.57	14.24	10.78	7.12	X	X	X	X	X	X*		
	62.42	28	42480	18.87	12.46	9.44	6.23	X	X	X	X	X*	X*		
	72.24	24	42480	16.18	10.68	8.09	5.34	X	X	X	X	X*	X*		
	88.17	20	42480	13.48	8.90	6.74	4.45	X	X	X	X	X*			
	102.40	17	42480	11.46	7.56	5.73	3.78	X	X	X	X				
	120.03	15	42480	10.11	6.67	5.06	3.34	X	X	X	X*				
	145.16	12	31860	6.07	4.00	3.03	2.00	X	X	X					
	169.24	10	42480	6.74	4.45	3.37	2.22			X	X*				
	198.38	8.8	42480	5.93	3.91	2.97	1.96			X	X*				
	247.06	7.1	42480	4.79	3.16	2.39	1.58	X	X	X*					
	289.61	6.0	42480	4.04	2.67	2.02	1.33	X	X	X*					
SK 9053.1	164.99	11	42480	5.00	3.30	2.50	1.65	X	X	X	X*				
	229.07	7.6	42480	5.00	3.30	2.50	1.65	X	X	X	X*				
	265.11	6.6	42480	4.45	2.94	2.22	1.47	X	X	X*	X*				
	348.91	5.0	42480	3.37	2.22	1.69	1.11	X	X	X*					
	458.57	3.8	42480	2.56	1.69	1.28	0.85	X	X						
	579.95	3.0	42480	2.02	1.33	1.01	0.67	X	X*						
	703.83	2.5	35400	1.40	0.93	0.70	0.46	X	X*						
	931.87	1.9	42480	1.28	0.85	0.64	0.42	X	X*						
	1062.85	1.6	42480	1.08	0.71	0.54	0.36	X	X*	X*	X*				
	1398.80	1.3	42480	0.88	0.58	0.44	0.29	X*	X*	X*					
	1872.50	0.93	42480	0.63	0.41	0.31	0.21	X*	X*						
	2023.49	0.86	42480	0.58	0.38	0.29	0.19	X*	X*						
	2953.98	0.59	42480	0.40	0.26	0.20	0.13	X*	X*						
	3735.92	0.47	42480	0.32	0.21	0.16	0.10	X*	X*						

* Caution - The motor power may exceed the gear unit's mechanical torque capacity
◈ The mechanical power limit of the solid input shaft type "W" may limit the reducer rating.
All ratings are mechanical. See page 14 for thermal considerations.

lb	W	56C	140TC	180TC	210TC	250TC	280TC
SK 9052.1	441	430	430	445	476	498	498
SK 9053.1	459	463	463	472	-	-	-

Send Quote Requests to info@automatedpt.com
Call +1(800)985-6929 To Order or Order Online At Nordgearmotors.com

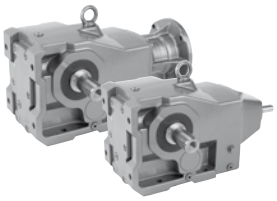



SK 9072.1, SK 9072.1/32/42 NEMA-C + W Ratings & Combinations

Model Type	Gear Ratio	Output Speed	Output Torque*	Maximum input power◈ Solid input shafts type "W"				NEMA C-Face* Available Combinations							
				Input Speed											
	i_{tot}	n_2 1750 rpm	$T_{2\,max}$	1750 rpm	1150 rpm	875 rpm	580 rpm								
		[rpm]	[lb-in]	[hp]	[hp]	[hp]	[hp]	56C	140TC	180TC	210TC	250TC	280TC	320TC	360TC
SK 9072.1	9.16	191	41595	60.00	39.60	30.00	19.80					X	X	X	X*
	10.19	172	41595	60.00	39.60	30.00	19.80			X	X	X	X	X	X*
	11.48	152	44250	60.00	39.60	30.00	19.80			X	X	X	X	X	X*
	12.06	145	44250	60.00	39.60	30.00	19.80			X	X	X	X	X	X*
	12.51	140	44250	60.00	39.60	30.00	19.80					X	X	X	X*
	14.06	124	46020	60.00	39.60	30.00	19.80			X	X	X	X	X	X*
	15.40	114	66375	60.00	39.60	30.00	19.80			X	X	X	X	X	X*
	16.44	106	66375	60.00	39.60	30.00	19.80					X	X	X	X*
	18.29	96	69030	60.00	39.60	30.00	19.80			X	X	X	X	X	X*
	20.61	85	75225	60.00	39.60	30.00	19.80			X	X	X	X	X	X*
	22.46	78	75225	60.00	39.60	30.00	19.80						X	X	X*
	25.24	69	75225	60.00	39.60	30.00	19.80			X	X	X	X	X	X*
	29.29	60	75225	60.00	39.60	30.00	19.80			X	X	X	X	X	X*
	35.19	50	75225	59.68	39.39	29.84	19.69			X	X	X	X	X	X*
	41.11	43	68145	46.49	30.69	23.25	15.34			X	X	X	X	X*	X*
	44.81	39	68145	42.17	27.83	21.08	13.92					X	X	X*	X*
	50.35	35	72570	40.30	26.60	20.15	13.30			X	X	X	X	X*	X*
	58.44	30	75225	35.81	23.63	17.90	11.82			X	X	X	X	X*	X*
	70.22	25	75225	29.84	19.69	14.92	9.85			X	X	X	X*	X*	X*
	79.69	22	75225	26.26	17.33	13.13	8.67			X	X	X	X*		
	91.47	19	75225	22.68	14.97	11.34	7.48			X	X	X	X*		
	110.18	16	75225	19.10	12.60	9.55	6.30			X	X				
	136.88	13	59295	12.23	8.07	6.12	4.04			X	X				
	157.27	11	75225	13.13	8.67	6.56	4.33			X	X	X*	X*		
	186.86	9.4	75225	11.22	7.40	5.61	3.70			X	X	X*	X*		
	206.84	8.5	75225	10.15	6.70	5.07	3.35			X	X				
	245.76	7.1	75225	8.47	5.59	4.24	2.80			X	X*				
SK 9072.1/32	311.10	5.6	75225	5.00	3.30	2.50	1.65	X	X	X	X*				
	385.88	4.5	75225	5.00	3.30	2.50	1.65	X	X	X	X*				
	473.22	3.7	75225	4.42	2.91	2.21	1.46	X	X	X*	X*				
	598.27	2.9	75225	3.46	2.28	1.73	1.14	X	X	X*	X*				
	767.55	2.3	75225	2.75	1.81	1.37	0.91	X	X	X*	X*				
	973.69	1.8	75225	2.15	1.42	1.07	0.71	X	X	X*	X*				
	1169.97	1.5	75225	1.79	1.18	0.90	0.59	X	X*	X*	X*				
	1453.44	1.2	75225	1.43	0.95	0.72	0.47	X	X*	X*	X*				
	1912.84	0.91	75225	1.09	0.72	0.54	0.36	X	X*	X*					
	2320.58	0.75	75225	0.95	0.63	0.47	0.31	X*	X*						
	3251.68	0.54	75225	0.70	0.46	0.35	0.23	X*	X*						
	4039.53	0.43	75225	0.57	0.37	0.28	0.19	X*	X*						
	4512.24	0.39	75225	0.52	0.34	0.26	0.17	X*	X*						
SK 9072.1/42	134.14	13	54870	10.00	6.60	5.00	3.30	X	X	X	X*	X*	X*		
	156.70	11	56640	9.89	6.52	4.94	3.26	X	X	X	X*	X*	X*		
	196.12	8.9	65490	9.25	6.10	4.62	3.05	X	X	X	X*	X*	X*		
	269.39	6.5	75225	7.76	5.12	3.88	2.56	X	X	X	X*	X*	X*		

* Caution - The motor power may exceed the gear unit's mechanical torque capacity
◈ The mechanical power limit of the solid input shaft type "W" may limit the reducer rating.
All ratings are mechanical. See page 14 for thermal considerations.

lb	W	56C	140TC	180TC	210TC	250TC	280TC	320TC	360TC
SK 9072.1	794	-	-	767	796	851	851	851	882
SK 9072.1/32	803	807	807	816	836	-	-	-	-
SK 9072.1/42	862	851	851	867	897	919	919	-	-

Send Quote Requests to info@automatedpt.com
Call +1(800)985-6929 To Order or Order Online At Nordgearmotors.com

Send Quote Requests to info@automatedpt.com Call +1(800)985-6929 To Order or Order Online At Nordgearmotors.com

SK 9082.1, SK 9082.1/42/52 NEMA-C + W Ratings & Combinations

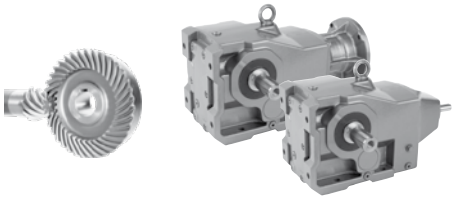

Model Type	Gear Ratio i_{tot}	Output Speed n_2 1750 rpm [rpm]	Output Torque* $T_{2\,max}$ [lb-in]	Maximum input power◈ Solid input shafts type "W" Input Speed 1750 rpm [hp]	1150 rpm [hp]	875 rpm [hp]	580 rpm [hp]	NEMA C-Face* Available Combinations 56C	140TC	180TC	210TC	250TC	280TC	320TC	360TC
SK 9082.1	8.04	218	63720	125.00	82.50	62.50	41.25			X	X	X	X	X	X
	12.31	142	74340	125.00	82.50	62.50	41.25			X	X	X	X	X	X
	14.61	120	115050	125.00	82.50	62.50	41.25			X	X	X	X	X	X
	17.35	101	115050	125.00	82.50	62.50	41.25						X	X	X
	20.16	87	115050	125.00	82.50	62.50	41.25							X	X
	22.37	78	115050	125.00	82.50	62.50	41.25			X	X	X	X	X	X
	26.71	66	115050	120.48	79.52	60.24	39.76			X	X	X	X	X	X
	31.27	56	115050	102.23	67.47	51.11	33.73			X	X	X	X	X	X
	35.83	49	115050	89.45	59.04	44.72	29.52			X	X	X	X	X	X
	41.54	42	115050	76.67	50.60	38.33	25.30			X	X	X	X	X	X
	44.63	39	115050	71.19	46.99	35.60	23.49			X	X	X	X	X	X*
	53.28	33	115050	60.24	39.76	30.12	19.88			X	X	X	X	X	X*
	62.39	28	115050	51.11	33.73	25.56	16.87			X	X	X	X	X	X*
	71.50	24	115050	43.81	28.92	21.91	14.46			X	X	X	X	X*	X*
	82.88	21	115050	38.33	25.30	19.17	12.65			X	X	X	X	X*	X*
	95.86	18	115050	32.86	21.69	16.43	10.84			X	X	X	X	X*	X*
	116.45	15	115050	27.38	18.07	13.69	9.04			X	X	X	X*	X*	X*
	122.46	14	115050	25.56	16.87	12.78	8.43			X	X	X	X*		
	148.76	12	115050	21.91	14.46	10.95	7.23			X	X	X	X*		
	244.32	7.2	115050	13.14	8.67	6.57	4.34			X	X	X*	X*		
	296.80	5.9	111510	10.44	6.89	5.22	3.44			X	X	X*	X*		
SK 9082.1/42	285.05	6.1	115050	10.00	6.60	5.00	3.30	X	X	X	X	X*	X*		
	379.59	4.6	115050	8.40	5.54	4.20	2.77	X	X	X	X*	X*	X*		
	443.41	3.9	115050	7.12	4.70	3.56	2.35	X	X	X	X*	X*	X*		
	603.37	2.9	115050	5.29	3.49	2.65	1.75	X	X	X	X*	X*	X*		
	704.48	2.5	115050	4.56	3.01	2.28	1.51	X	X	X*	X*	X*	X*		
	845.38	2.1	115050	3.83	2.53	1.92	1.27	X	X	X*	X*	X*	X*		
	1017.77	1.7	115050	3.10	2.05	1.55	1.02	X	X	X*	X*	X*	X*		
	1467.80	1.2	115050	2.19	1.45	1.10	0.72	X	X	X*	X*	X*			
	1812.59	0.97	115050	1.77	1.17	0.89	0.58	X	X*	X*	X*	X*			
	2044.65	0.86	115050	1.57	1.04	0.78	0.52	X	X*	X*	X*				
	2682.59	0.65	115050	1.19	0.78	0.59	0.39	X	X*	X*					
	3341.45	0.52	115050	1.00	0.66	0.50	0.33	X*	X*	X*					
	4671.14	0.37	115050	0.73	0.48	0.36	0.24	X*	X*	X*					
SK 9082.1/52	123.13	14	106200	20.00	13.20	10.00	6.60			X	X	X	X*		
	146.19	12	115050	20.00	13.20	10.00	6.60			X	X	X	X*		
	182.09	9.6	115050	17.52	11.57	8.76	5.78			X	X	X*	X*		
	245.62	7.1	115050	12.96	8.55	6.48	4.28			X	X	X*	X*		

* Caution - The motor power may exceed the gear unit's mechanical torque capacity
◈ The mechanical power limit of the solid input shaft type "W" may limit the reducer rating.
All ratings are mechanical. See page 14 for thermal considerations.

lb	W	56C	140TC	180TC	210TC	250TC	280TC	320TC	360TC
SK 9082.1	1532	-	-	1338	1369	1424	1424	1455	1488
SK 9082.1/42	1435	1424	1424	1440	1471	1493	-	-	-
SK 9082.1/52	1491	-	-	1495	1526	1548	1548	-	-

Send Quote Requests to info@automatedpt.com
Call +1(800)985-6929 To Order or Order Online At Nordgearmotors.com

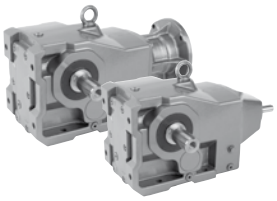



SK 9086.1, SK 9086.1/52 NEMA-C + W Ratings & Combinations

Model Type	Gear Ratio i_{tot}	Output Speed n_2 1750 rpm [rpm]	Output Torque* $T_{2\,max}$ [lb-in]	Maximum input power◈ Solid input shafts type "W" Input Speed 1750 rpm [hp]	1150 rpm [hp]	875 rpm [hp]	580 rpm [hp]	NEMA C-Face* Available Combinations 56C	140TC	180TC	210TC	250TC	280TC	320TC	360TC
SK 9086.1	8.04	218	106200	200.00	132.00	100.00	66.00			X	X	X	X	X	X
	9.55	183	115050	200.00	132.00	100.00	66.00						X	X	X
	11.60	151	150450	200.00	132.00	100.00	66.00			X	X	X	X	X	X
	12.31	142	123900	200.00	132.00	100.00	66.00			X	X	X	X	X	X
	14.70	119	132750	200.00	132.00	100.00	66.00			X	X	X	X	X	X
	16.38	107	168150	200.00	132.00	100.00	66.00						X	X	X
	17.77	98	168150	200.00	132.00	100.00	66.00			X	X	X	X	X	X
	21.12	83	177000	200.00	132.00	100.00	66.00			X	X	X	X	X	X
	25.21	69	177000	193.78	127.90	96.89	63.95			X	X	X	X	X	X
	29.52	59	177000	165.70	109.36	82.85	54.68			X	X	X	X	X	X
	35.44	49	159300	123.85	81.74	61.93	40.87			X	X	X	X	X	X
	42.13	42	177000	117.95	77.85	58.98	38.92			X	X	X	X	X	X
	50.30	35	177000	98.29	64.87	49.15	32.44			X	X	X	X	X	X
	58.90	30	177000	84.25	55.61	42.13	27.80			X	X	X	X	X	X
	67.50	26	177000	73.02	48.19	36.51	24.10			X	X	X	X	X	X*
	78.24	22	177000	61.76	40.76	30.88	20.38			X	X	X	X	X	X*
	90.50	19	177000	53.36	35.22	26.68	17.61			X	X	X	X	X	
	116.50	15	177000	42.13	27.80	21.06	13.90			X	X	X	X		
	127.67	14	177000	39.32	25.95	19.66	12.97					X	X	X*	
	151.76	12	177000	33.70	22.24	16.85	11.12					X	X	X*	
	194.04	9.0	177000	25.28	16.68	12.64	8.34			X	X	X	X*		
	230.64	7.6	177000	21.34	14.09	10.67	7.04			X	X	X	X*		
SK 9086.1/52	144.60	12	159300	30.00	19.80	15.00	9.90			X	X	X	X		
	171.89	10	177000	28.08	18.54	14.04	9.27			X	X	X	X*		
	235.93	7.4	177000	20.78	13.72	10.39	6.86	X	X	X	X	X	X*		
	270.47	6.5	177000	18.25	12.05	9.13	6.02			X	X	X*	X*		
	378.14	4.6	177000	12.92	8.53	6.46	4.26			X	X	X*	X*		
	433.35	4.0	177000	11.23	7.41	5.62	3.71			X	X	X*	X*		
	623.16	2.8	177000	7.86	5.19	3.93	2.59	X	X	X	X*	X*	X*		
	714.15	2.5	177000	7.02	4.63	3.51	2.32	X	X	X	X*	X*	X*		
	907.88	1.9	177000	5.34	3.52	2.67	1.76	X	X	X	X*	X*	X*		
	1202.18	1.5	177000	4.21	2.78	2.11	1.39	X	X	X*	X*	X*	X*		
	1463.40	1.2	177000	3.37	2.22	1.69	1.11	X	X	X*	X*	X*	X*		
	1786.05	0.98	177000	2.75	1.82	1.38	0.91	X	X	X*	X*	X*			
	2107.43	0.83	177000	2.33	1.54	1.17	0.77	X	X	X*					
	3007.66	0.58	177000	1.63	1.08	0.81	0.54	X	X*	X*					
	3590.92	0.49	177000	1.38	0.91	0.69	0.45	X	X*	X*					
	4818.83	0.36	177000	1.01	0.67	0.51	0.33	X	X*	X*					

W + NEMA

* Caution - The motor power may exceed the gear unit's mechanical torque capacity
◈ The mechanical power limit of the solid input shaft type "W" may limit the reducer rating.
All ratings are mechanical. See page 14 for thermal considerations.

lb	W	56C	140TC	180TC	210TC	250TC	280TC	320TC	360TC
SK 9086.1	2084	-	-	1890	1921	1976	1976	2007	2040
SK 9086.1/52	2042	2031	2031	2046	2077	2099	2099	-	-

Send Quote Requests to info@automatedpt.com
Call +1(800)985-6929 To Order or Order Online At Nordgearmotors.com

SK 9092.1, SK 9092.1/52
NEMA-C + W
Ratings & Combinations

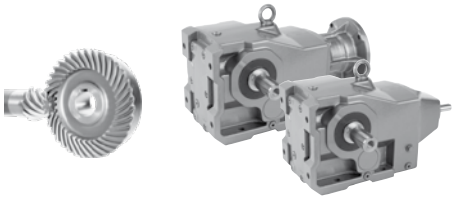

Model Type	Gear Ratio	Output Speed	Output Torque*	Maximum input power◈ Solid input shafts type "W"				NEMA C-Face* Available Combinations							
				Input Speed											
	i_{tot}	n_2 1750 rpm	$T_{2\,max}$	1750 rpm	1150 rpm	875 rpm	580 rpm								
		[rpm]	[lb-in]	[hp]	[hp]	[hp]	[hp]	56C	140TC	180TC	210TC	250TC	280TC	320TC	360TC
SK 9092.1	10.68	164	159300	200.00	132.00	100.00	66.00								X
	11.55	152	162840	200.00	132.00	100.00	66.00				X	X	X	X	X
	14.10	124	171690	200.00	132.00	100.00	66.00				X	X	X	X	X
	17.26	101	181425	200.00	132.00	100.00	66.00				X	X	X	X	X
	20.38	86	283200	200.00	132.00	100.00	66.00				X	X	X	X	X
	24.94	70	283200	200.00	132.00	100.00	66.00				X	X	X	X	X
	29.28	60	283200	200.00	132.00	100.00	66.00				X	X	X	X	X
	34.15	51	283200	200.00	132.00	100.00	66.00				X	X	X	X	X
	39.10	45	283200	200.00	132.00	100.00	66.00				X	X	X	X	X
	40.65	43	283200	193.22	127.52	96.61	63.76				X	X	X	X	X
	49.75	35	283200	157.27	103.80	78.64	51.90				X	X	X	X	X
	58.66	30	283200	134.80	88.97	67.40	44.49				X	X	X	X	X
	68.87	25	283200	112.34	74.14	56.17	37.07				X	X	X	X	X
	80.00	22	283200	98.86	65.25	49.43	32.62				X	X	X	X	X
	91.60	19	283200	85.38	56.35	42.69	28.17				X	X	X	X	X
	102.28	17	283200	76.39	50.42	38.19	25.21				X	X	X	X	
	120.23	15	283200	67.40	44.49	33.70	22.24				X	X	X	X	
	152.96	11	283200	49.43	32.62	24.71	16.31				X	X	X		
	197.51	8.9	283200	39.99	26.39	20.00	13.20					X	X		
	253.40	6.9	283200	31.00	20.46	15.50	10.23				X	X	X		
	297.51	5.9	283200	26.51	17.50	13.26	8.75				X	X	X*		
SK 9092.1/52	191.28	9.1	283200	30.00	19.80	15.00	9.90					X	X		
	222.14	7.9	283200	30.00	19.80	15.00	9.90					X	X		
	280.76	6.2	283200	27.86	18.39	13.93	9.19			X	X	X	X*		
	385.67	4.5	283200	20.22	13.35	10.11	6.67	X	X	X	X	X	X*		
	441.46	4.0	283200	17.97	11.86	8.99	5.93	X	X	X	X	X*	X*		
	608.12	2.9	283200	13.03	8.60	6.52	4.30	X	X	X	X	X*	X*		
	706.40	2.5	283200	11.23	7.41	5.62	3.71	X	X	X	X	X*	X*		
	846.40	2.1	283200	9.44	6.23	4.72	3.11	X	X	X	X*	X*	X*		
	1120.00	1.6	283200	7.19	4.75	3.59	2.37	X	X	X	X*	X*	X*		
	1424.80	1.2	283200	5.39	3.56	2.70	1.78	X	X	X	X*	X*	X*		
	1795.36	0.97	283200	4.36	2.88	2.18	1.44	X	X	X*	X*	X*	X*		
	2116.80	0.83	283200	3.73	2.46	1.86	1.23	X	X	X*	X*	X*			
	2902.00	0.60	230100	2.19	1.45	1.10	0.72	X	X	X*					
	3551.65	0.49	230100	1.79	1.18	0.89	0.59	X	X*	X*					
	4916.63	0.36	283200	1.62	1.07	0.81	0.53	X	X*	X*					

* Caution - The motor power may exceed the gear unit's mechanical torque capacity
◈ The mechanical power limit of the solid input shaft type "W" may limit the reducer rating.
All ratings are mechanical. See page 14 for thermal considerations.

lb	W	56C	140TC	180TC	210TC	250TC	280TC	320TC	360TC
SK 9092.1	3341	-	-	-	3177	3233	3233	3263	3296
SK 9092.1/52	3299	3288	3288	3303	3334	3356	3356	-	-

Send Quote Requests to info@automatedpt.com
Call +1(800)985-6929 To Order or Order Online At Nordgearmotors.com

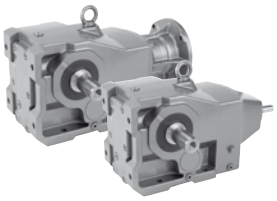



SK 9096.1, SK 9096.1/62 NEMA-C + W Ratings & Combinations

Model Type	Gear Ratio i_{tot}	Output Speed n_2 1750 rpm [rpm]	Output Torque* $T_{2\,max}$ [lb-in]	Maximum input power◈ Solid input shafts type "W" Input Speed 1750 rpm [hp]	1150 rpm [hp]	875 rpm [hp]	580 rpm [hp]	NEMA C-Face* Available Combinations 56C	140TC	180TC	210TC	250TC	280TC	320TC	360TC
SK 9096.1	22.75	77	442500	200.00	132.00	100.00	66.00							X	X
	26.31	67	442500	200.00	132.00	100.00	66.00							X	X
	28.47	61	442500	200.00	132.00	100.00	66.00						X	X	X
	32.93	53	442500	200.00	132.00	100.00	66.00						X	X	X
	36.24	48	442500	200.00	132.00	100.00	66.00						X	X	X
	41.32	42	442500	200.00	132.00	100.00	66.00				X	X	X	X	X
	47.79	37	442500	200.00	132.00	100.00	66.00				X	X	X	X	X
	56.26	31	442500	200.00	132.00	100.00	66.00							X	X
	65.07	27	442500	189.57	125.12	94.78	62.56							X	X
	70.41	25	442500	175.53	115.85	87.76	57.92						X	X	X
	81.43	21	442500	147.44	97.31	73.72	48.66						X	X	X
	89.60	20	442500	140.42	92.68	70.21	46.34						X	X	X
	102.18	17	442500	119.36	78.78	59.68	39.39				X	X	X	X	X
	118.18	15	442500	105.32	69.51	52.66	34.75				X	X	X	X	X
	133.53	13	442500	91.27	60.24	45.64	30.12				X	X	X	X	X
	154.29	11	442500	77.23	50.97	38.62	25.49				X	X	X	X	X
	173.41	10	442500	70.21	46.34	35.11	23.17				X	X	X	X	
	200.57	8.7	442500	61.08	40.31	30.54	20.16				X	X	X	X	
SK 9096.1/62	208.95	8.4	442500	58.98	38.92	29.49	19.46					X	X	X	X*
	233.51	7.5	442500	52.66	34.75	26.33	17.38			X	X	X	X	X	X*
	270.09	6.5	442500	45.64	30.12	22.82	15.06			X	X	X	X	X*	X*
	297.17	5.9	442500	41.42	27.34	20.71	13.67			X	X	X	X	X*	X*
	320.72	5.5	442500	38.62	25.49	19.31	12.74			X	X	X	X	X*	X*
	370.95	4.7	442500	33.00	21.78	16.50	10.89			X	X	X	X	X*	X*
	431.00	4.1	442500	28.79	19.00	14.39	9.50			X	X	X	X*	X*	X*
	474.22	3.7	442500	25.98	17.15	12.99	8.57			X	X	X	X*	X*	X*
	538.33	3.3	442500	23.17	15.29	11.58	7.65			X	X	X	X*	X*	X*
	607.63	2.9	442500	20.36	13.44	10.18	6.72			X	X	X	X*	X*	X*
	702.80	2.5	442500	17.55	11.58	8.78	5.79			X	X	X*	X*	X*	X*
	816.57	2.1	442500	14.74	9.73	7.37	4.87			X	X	X*	X*	X*	X*
	979.31	1.8	442500	12.64	8.34	6.32	4.17			X	X	X*	X*	X*	X*
	1165.22	1.5	442500	10.53	6.95	5.27	3.48			X	X	X*	X*	X*	X*
	1353.86	1.3	442500	9.13	6.02	4.56	3.01			X	X*	X*	X*	X*	X*
	1623.67	1.1	442500	7.72	5.10	3.86	2.55			X	X*	X*	X*	X*	X*

* Caution - The motor power may exceed the gear unit's mechanical torque capacity
◈ The mechanical power limit of the solid input shaft type "W" may limit the reducer rating.
All ratings are mechanical. See page 14 for thermal considerations.

lb	W	56C	140TC	180TC	210TC	250TC	280TC	320TC	360TC
SK 9096.1	4221	-	-	-	4057	4113	4113	4143	4176
SK 9096.1/62	4298	4287	4287	4302	4333	4355	4355	-	-

Send Quote Requests to info@automatedpt.com
Call +1(800)985-6929 To Order or Order Online At Nordgearmotors.com

SK 9096.1/63
NEMA-C + W
Ratings & Combinations

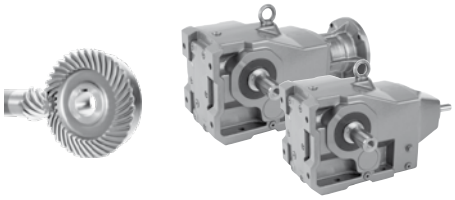

Model Type	Gear Ratio	Output Speed	Output Torque*	Maximum input power◈ Solid input shafts type "W"				NEMA C-Face* Available Combinations							
				Input Speed											
	i_{tot}	n_2 1750 rpm	$T_{2\,max}$	1750 rpm	1150 rpm	875 rpm	580 rpm								
		[rpm]	[lb-in]	[hp]	[hp]	[hp]	[hp]	56C	140TC	180TC	210TC	250TC	280TC	320TC	360TC
SK 9096.1/63	1774.21	0.99	442500	6.95	4.59	3.48	2.29	X	X	X	X*	X*	X*		
	2052.10	0.85	442500	5.97	3.94	2.98	1.97	X	X	X	X*	X*	X*		
	2316.27	0.76	442500	5.34	3.52	2.67	1.76	X	X	X	X*	X*	X*		
	2679.06	0.65	442500	4.56	3.01	2.28	1.51	X	X	X*	X*	X*	X*		
	3210.12	0.55	442500	3.86	2.55	1.93	1.27	X	X	X*	X*	X*	X*		
	3692.48	0.47	442500	3.30	2.18	1.65	1.09	X	X	X*	X*	X*	X*		
	4441.42	0.39	442500	2.74	1.81	1.37	0.90	X	X	X*	X*	X*	X*		
	5575.65	0.31	442500	2.18	1.44	1.09	0.72	X	X	X*	X*	X*	X*		
	6706.55	0.26	442500	1.83	1.20	0.91	0.60	X	X*	X*	X*	X*	X*		
	7842.34	0.22	442500	1.54	1.02	0.77	0.51	X	X*	X*	X*	X*	X*		
	8306.57	0.21	442500	1.47	0.97	0.74	0.49	X	X*	X*	X*	X*	X*		
	9713.32	0.18	442500	1.26	0.83	0.63	0.42	X	X*	X*	X*	X*	X*		
	11954.86	0.15	442500	1.05	0.70	0.53	0.35	X	X*	X*	X*	X*			
	13432.68	0.13	442500	0.97	0.64	0.48	0.32	X*	X*	X*	X*				

* Caution - The motor power may exceed the gear unit's mechanical torque capacity
◈ The mechanical power limit of the solid input shaft type "W" may limit the reducer rating.
All ratings are mechanical. See page 14 for thermal considerations.

lb	W	56C	140TC	180TC	210TC	250TC	280TC
SK 9096.1/63	4315	4304	4304	4319	4350	4372	4372

Send Quote Requests to info@automatedpt.com
Call +1(800)985-6929 To Order or Order Online At Nordgearmotors.com

Send Quote Requests to info@automatedpt.com
Call +1(800)985-6929 To Order or Order Online At Nordgearmotors.com

Right-angle Helical-bevel Dimensions

Dimensions

- Gearmotor
- Reducers C-Face
- Options
- Shafts

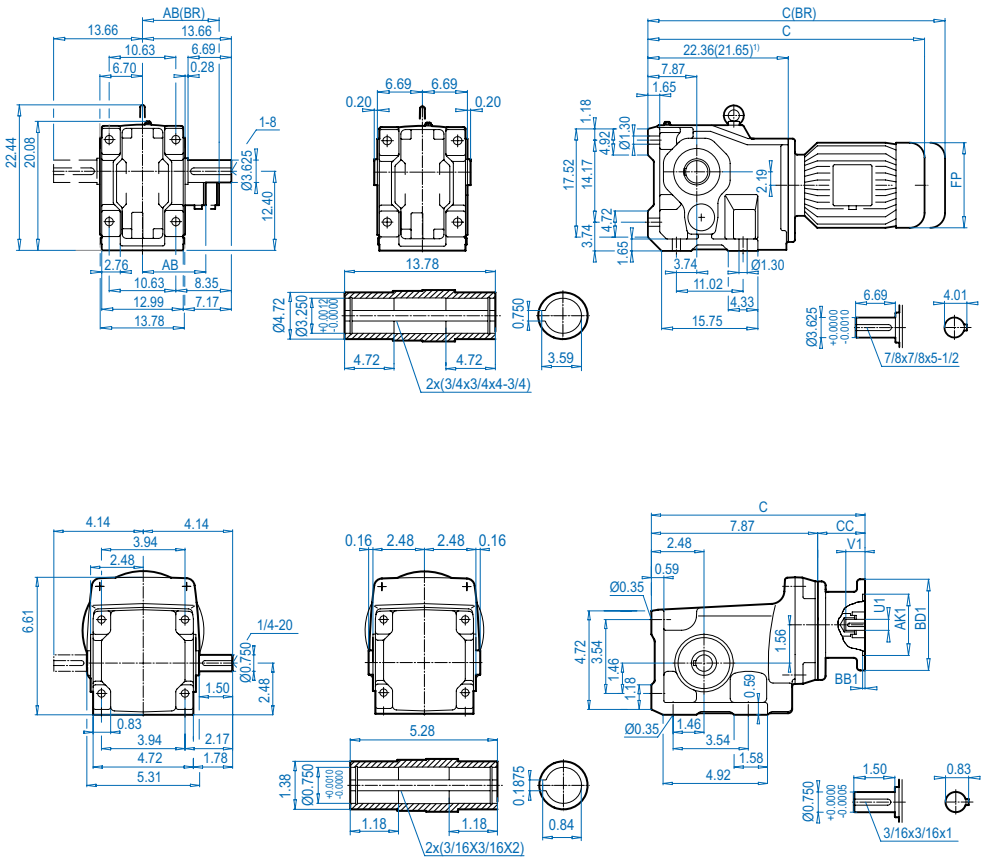

NORD DRIVESYSTEMS

www.nord.com

UNICASE™

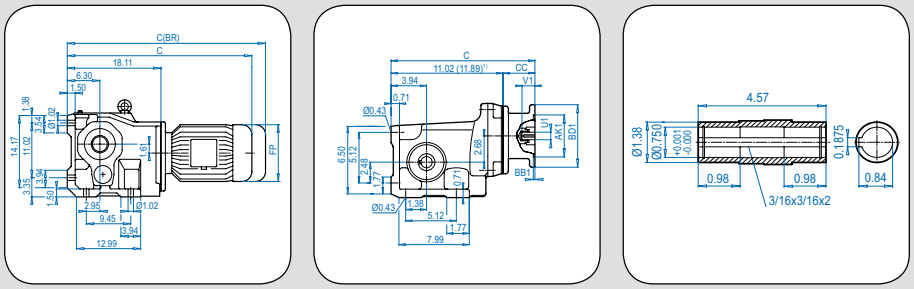

Send Quote Requests to info@automatedpt.com
Call +1(800)985-6929 To Order or Order Online At Nordgearmotors.com

SK 92072 + Motor




DRIVESYSTEMS

SK 92072

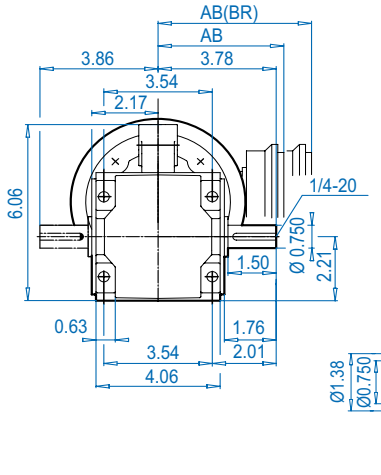

SK 92072AX

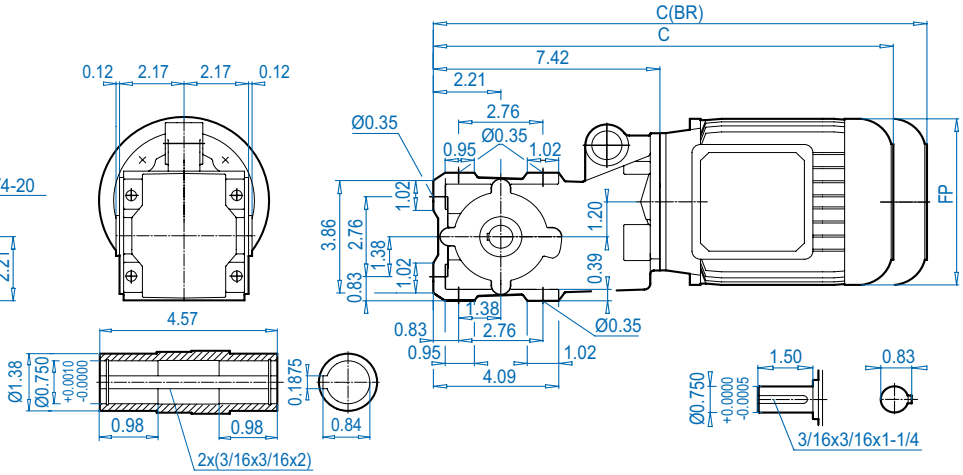

SK 92072VF

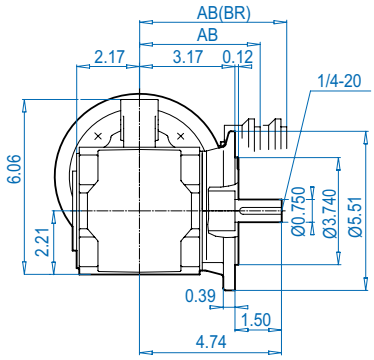

SK 92072AF

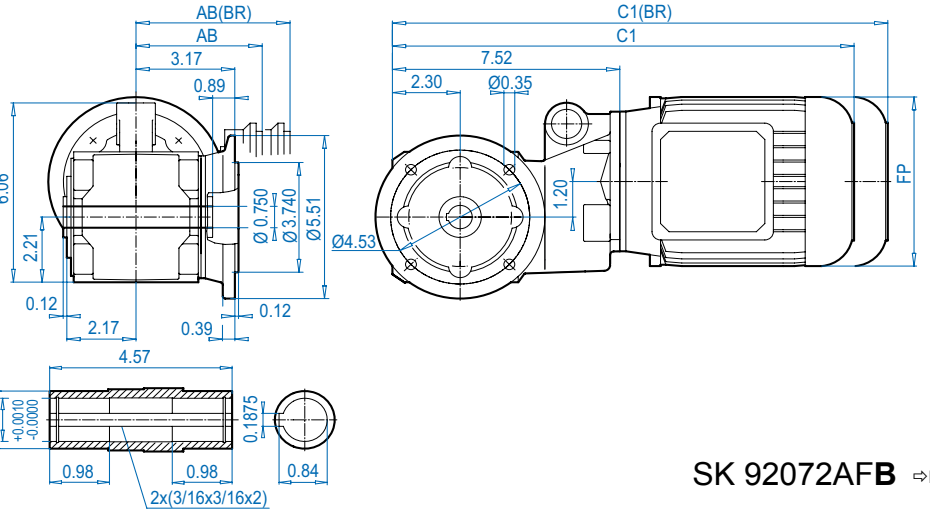

SK 92072AX**B** ⇨🕮 574

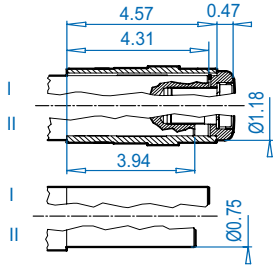

SK 92072A**D**

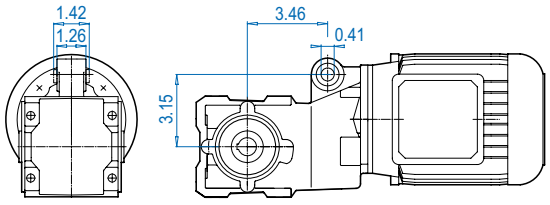

SK 92072AF**B** ⇨🕮 574

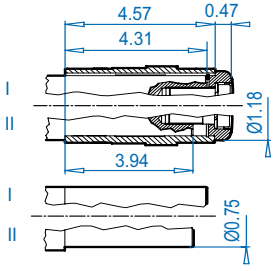

Motor dimensions

Standard efficiency	63S/L	71S/L	80S/L	90S/L			For Other Connection Possibilities please see ⇨🕮 554 & 556
Energy efficiency			80LH	90SH/LH			
AB	4.53	4.88	5.59	5.79			
AB (BR)	4.84	5.00	5.63	5.83			
C1	15.08	15.94	16.81	18.39			
C1 (BR)	17.28	18.23	19.33	21.34			
C	15.00	15.87	16.73	18.31			
C (BR)	17.20	18.15	19.25	21.26			
FP	5.12	5.71	6.50	7.20			

(BR) denotes Brakemotor

Send Quote Requests to info@automatedpt.com
Call +1(800)985-6929 To Order or Order Online At Nordgearmotors.com

DRIVESYSTEMS

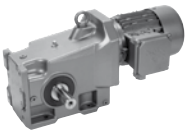



SK 92072 + Motor

SK 92072AZ

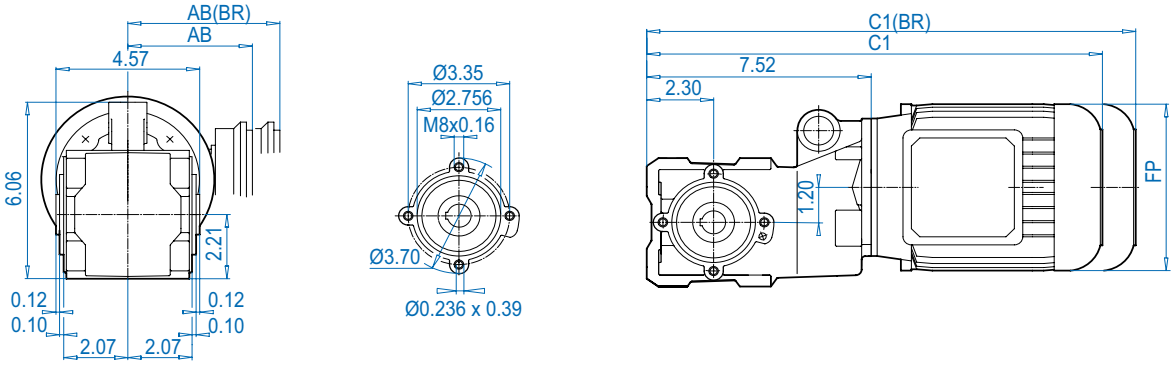

SK 92072AZ**SH**

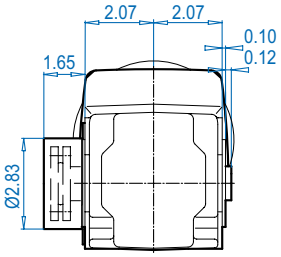

Dimensions in Inches
DIMENSIONS
ALTERNATE SHAFTS SEE PAGES 566 - 573

SK 92072AZ

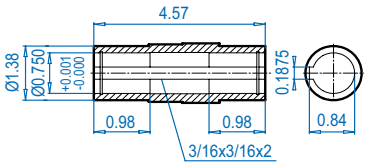

SK 92072AZ**B** ⇨🕮 574

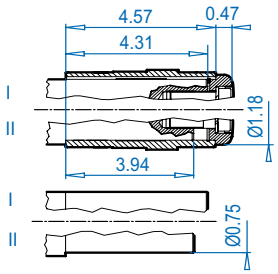

SK 92072AZ**S** ⇨🕮 571

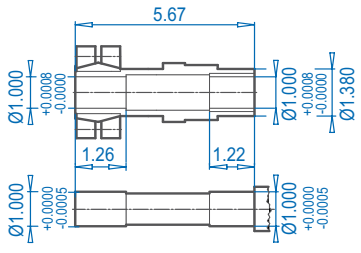

Motor dimensions

Standard efficiency	63S/L	71S/L	80S/L	90S/L			For Other Connection Possibilities please see ⇨🕮 554 & 556
Energy efficiency			80LH	90SH/LH			
AB	4.53	4.88	5.59	5.79			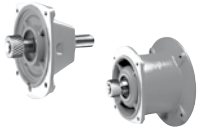
AB (BR)	4.84	5.00	5.63	5.83			
C1	15.08	15.94	16.81	18.39			
C1 (BR)	17.28	18.23	19.33	21.34			
FP	5.12	5.71	6.50	7.20			

(BR) denotes Brakemotor

Send Quote Requests to info@automatedpt.com
Call +1(800)985-6929 To Order or Order Online At Nordgearmotors.com

SK 92072 + NEMA




DRIVESYSTEMS

SK 92072

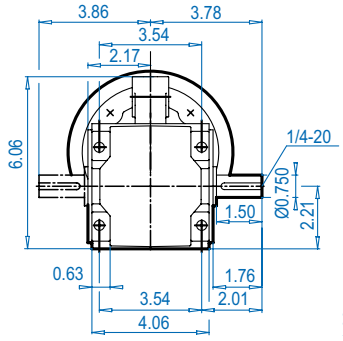

SK 92072AX

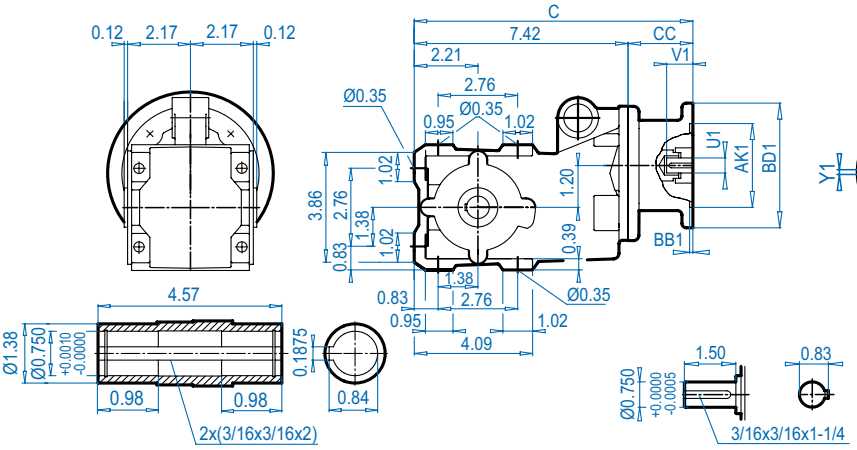

NEMA Input

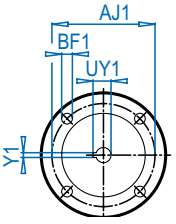

SK 92072VF

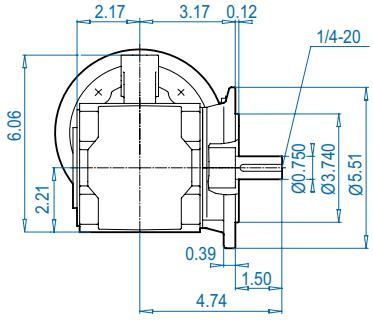

SK 92072AF

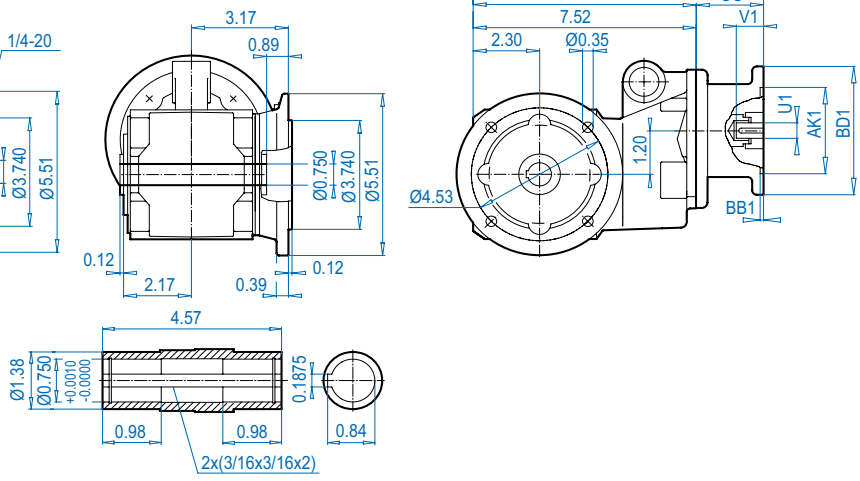

SK 92072AXB ⇨🕮 574

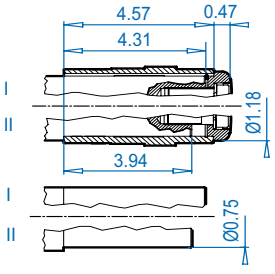

SK 92072AD

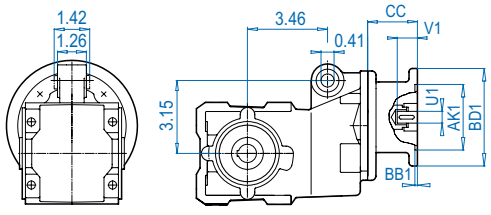

SK 92072AFB ⇨🕮 574

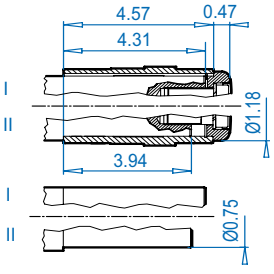

NEMA Dimensions

Type	AJ1	AK1	BB1	BD1	BF1	U1	V1	UY1	Y1	C	C1	CC
56C	5.88	4.500	0.18	6.61	0.43	0.625	2.06	0.71	0.188	11.73	11.81	4.29
140TC	5.88	4.500	0.18	6.61	0.43	0.875	2.12	0.96	0.188	11.73	11.81	4.29

Send Quote Requests to info@automatedpt.com
Call +1(800)985-6929 To Order or Order Online At Nordgearmotors.com

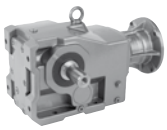


SK 92072 + NEMA

SK 92072AZ

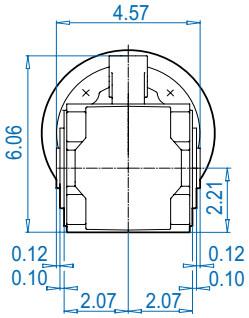

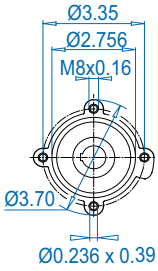

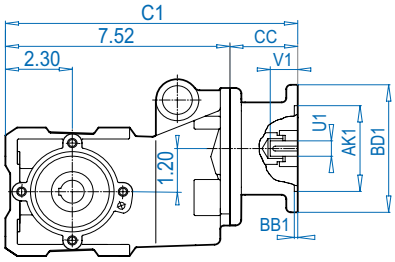

NEMA Input

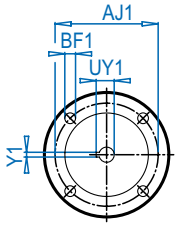

Dimensions in inches
DIMENSIONS

SK 92072AZ**SH**

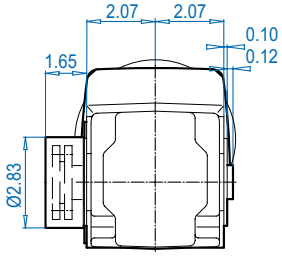

ALTERNATE SHAFTS SEE PAGES 566 - 573

SK 92072AZ

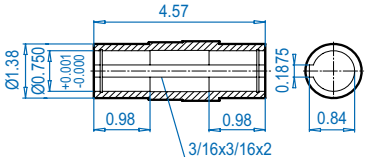

SK 92072AZ**B** ⇨🕮 574

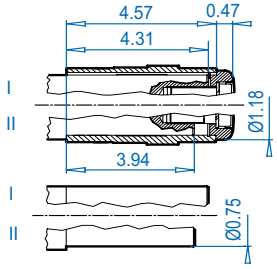

SK 92072AZ**S** ⇨🕮 571

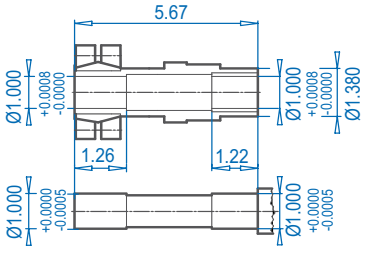

NEMA Dimensions

Type	AJ1	AK1	BB1	BD1	BF1	U1	V1	UY1	Y1	C1	CC
56C	5.88	4.500	0.18	6.61	0.43	0.625	2.06	0.71	0.188	11.81	4.29
140TC	5.88	4.500	0.18	6.61	0.43	0.875	2.12	0.96	0.188	11.81	4.29

Send Quote Requests to info@automatedpt.com
Call +1(800)985-6929 To Order or Order Online At Nordgearmotors.com

SK 92172 + Motor




DRIVESYSTEMS

SK 92172

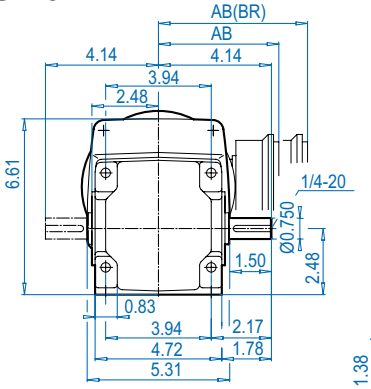

SK 92172AX

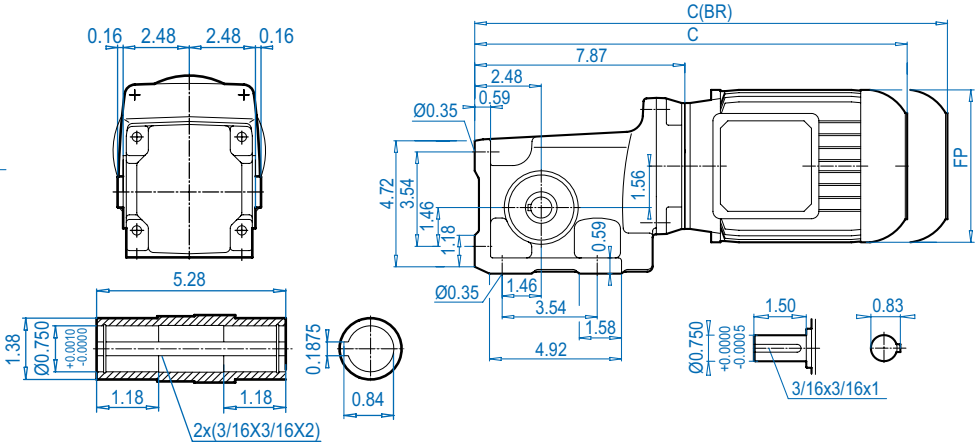

SK 92172VF

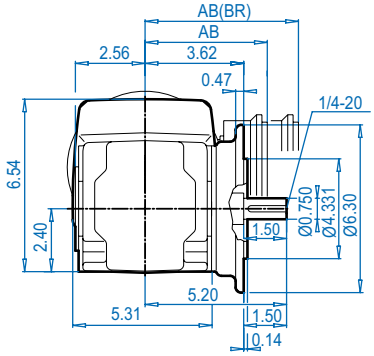

SK 92172AF

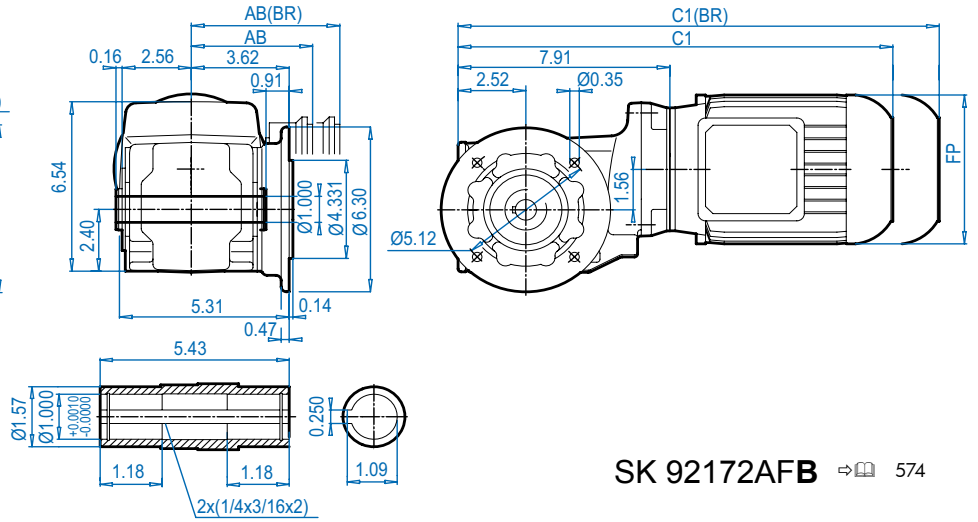

SK 92172AX**B** ⇨🕮 574

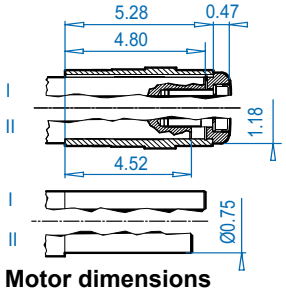

SK 92172AF**B** ⇨🕮 574

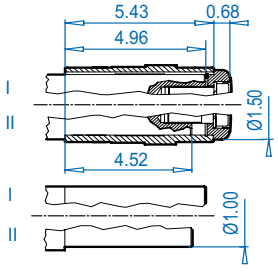

Motor dimensions

Standard efficiency	63S/L	71S/L	80S/L	90S/L			For Other Connection Possibilities please see ⇨🕮 554 & 556
Energy efficiency			80LH	90SH/LH			
AB	4.53	4.88	5.59	5.79			
AB (BR)	4.84	5.00	5.63	5.83			
C1	15.47	16.34	17.20	18.78			
C1 (BR)	17.68	18.62	19.72	21.73			
C	15.43	16.30	17.17	18.74			
C (BR)	17.64	18.58	19.69	21.69			
FP	5.12	5.71	6.50	7.20			

(BR) denotes Brakemotor

Send Quote Requests to info@automatedpt.com
Call +1(800)985-6929 To Order or Order Online At Nordgearmotors.com

DRIVESYSTEMS



SK 92172 + Motor

SK 92172AZ

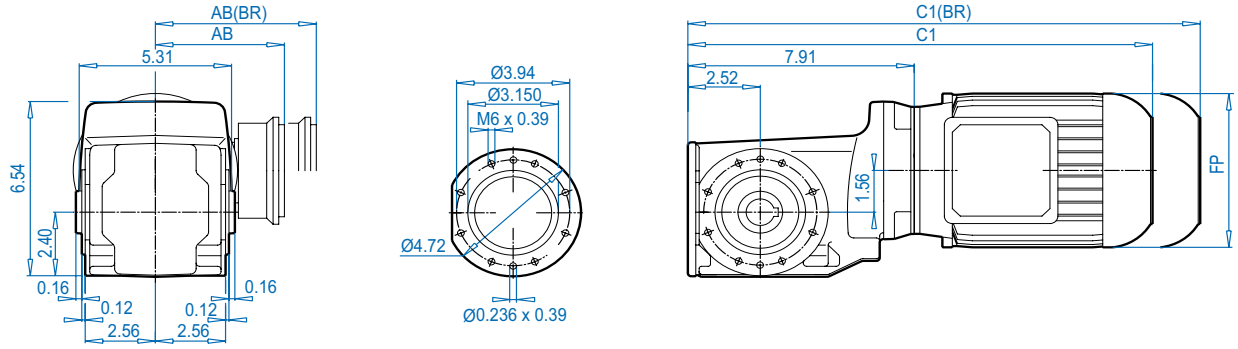

SK 92172AZ**D**

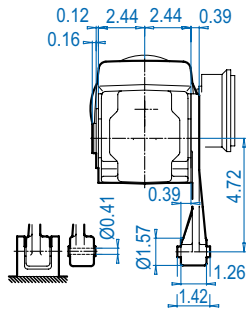

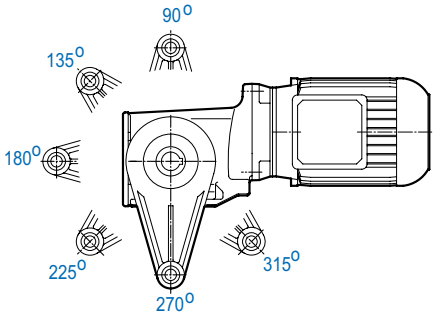

SK 92172AZ**SH**

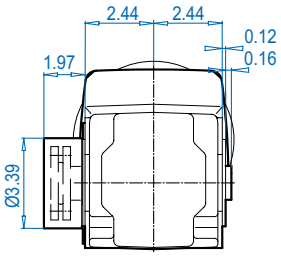

SK 92172AZ

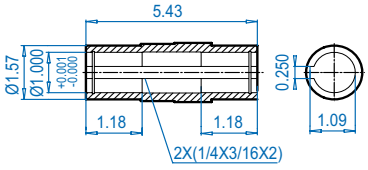

SK 92172AZ**B** ⇨🕮 574

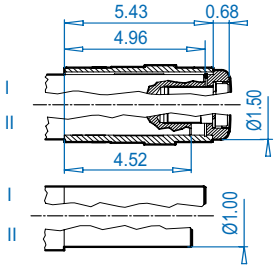

SK 92172AZ**S** ⇨🕮 571

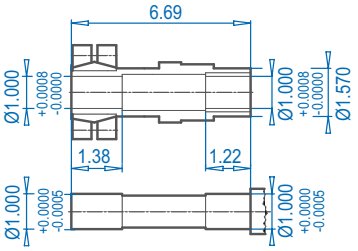

Motor dimensions

Standard efficiency	63S/L	71S/L	80S/L	90S/L			For Other Connection Possibilities please see ⇨🕮 554 & 556
Energy efficiency			80LH	90SH/LH			
AB	4.53	4.88	5.59	5.79			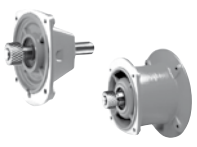
AB (BR)	4.84	5.00	5.63	5.83			
C1	15.47	16.34	17.20	18.78			
C1 (BR)	17.68	18.62	19.72	21.73			
FP	5.12	5.71	6.50	7.20			

(BR) denotes Brakemotor

Dimensions in Inches
DIMENSIONS
ALTERNATE SHAFTS SEE PAGES 566 - 573

Send Quote Requests to info@automatedpt.com
Call +1(800)985-6929 To Order or Order Online At Nordgearmotors.com

SK 92172 + NEMA




DRIVESYSTEMS

SK 92172

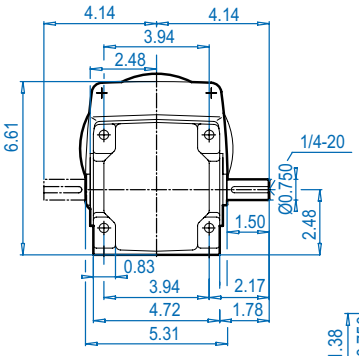

SK 92172AX

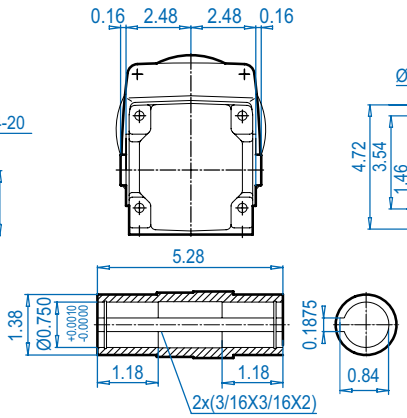

NEMA Input

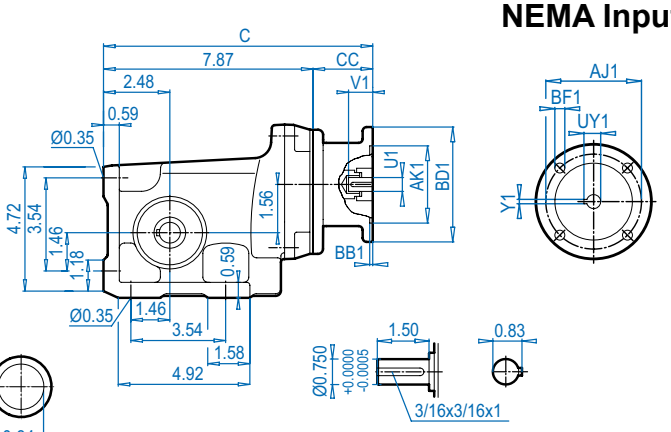

SK 92172VF

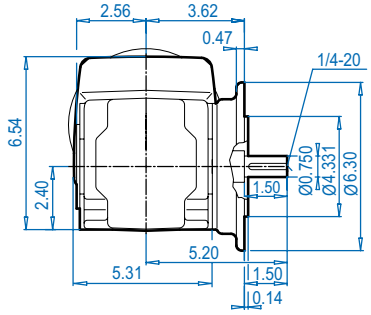

SK 92172AF

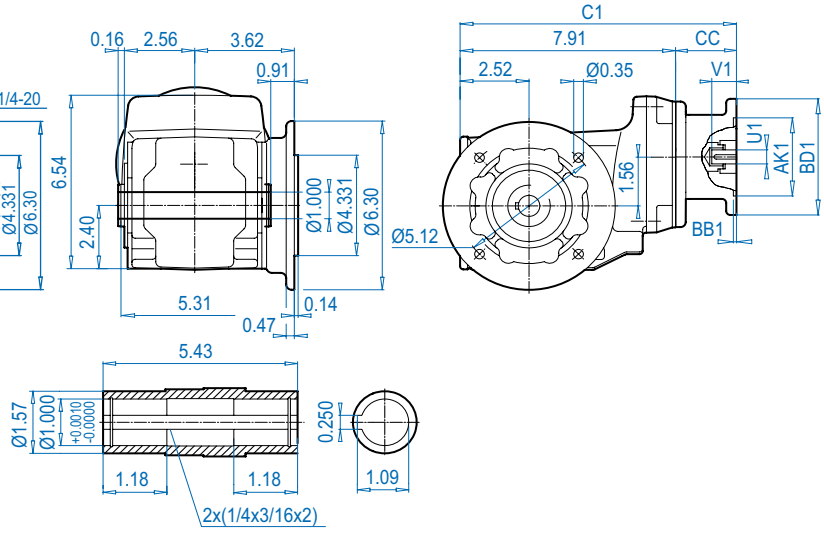

SK 92172AX**B** ⇨🕮 574

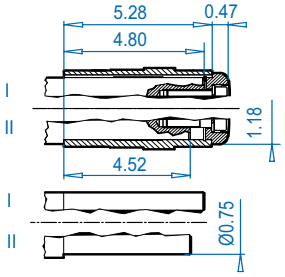

SK 92172AF**B** ⇨🕮 574

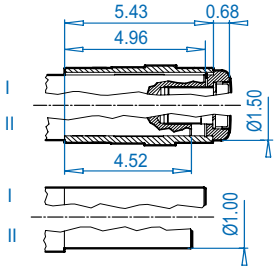

NEMA Dimensions

Type	AJ1	AK1	BB1	BD1	BF1	U1	V1	UY1	Y1	C	C1	CC
56C	5.88	4.500	0.18	6.61	0.43	0.625	2.06	0.71	0.188	12.16	11.93	4.29
140TC	5.88	4.500	0.18	6.61	0.43	0.875	2.12	0.96	0.188	12.16	11.93	4.29

Send Quote Requests to info@automatedpt.com
Call +1(800)985-6929 To Order or Order Online At Nordgearmotors.com

DRIVESYSTEMS

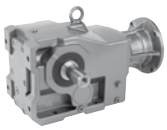



SK 92172 + NEMA

SK 92172AZ

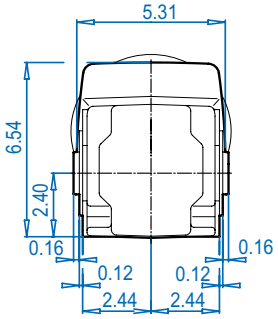

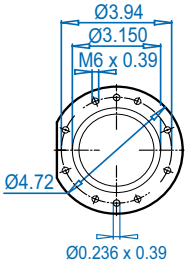

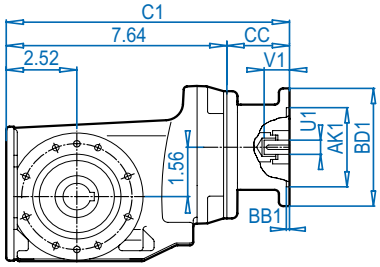

NEMA Input

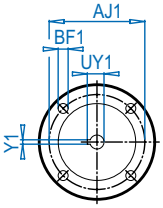

Dimensions in Inches
DIMENSIONS

SK 92172AZ**D**

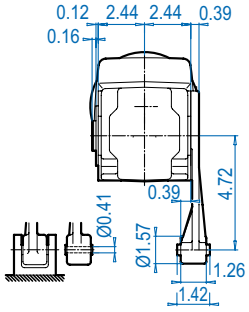

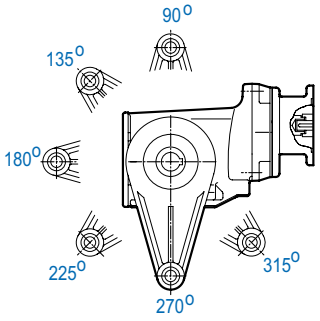

SK 92172AZ**SH**

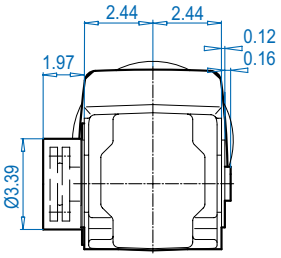

SK 92172AZ

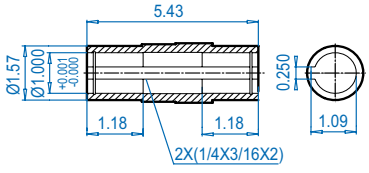

SK 92172AZ**B** ⇨🕮 574

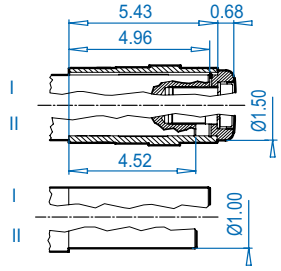

SK 92172AZ**S** ⇨🕮 571

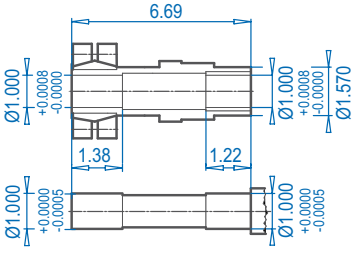

NEMA Dimensions

Type	AJ1	AK1	BB1	BD1	BF1	U1	V1	UY1	Y1	C1	CC
56C	5.88	4.500	0.18	6.61	0.43	0.625	2.06	0.71	0.188	11.93	4.29
140TC	5.88	4.500	0.18	6.61	0.43	0.875	2.12	0.96	0.188	11.93	4.29

ALTERNATE SHAFTS SEE PAGES 566 - 573

Send Quote Requests to info@automatedpt.com
Call +1(800)985-6929 To Order or Order Online At Nordgearmotors.com

SK 92372 + Motor




DRIVESYSTEMS

SK 92372

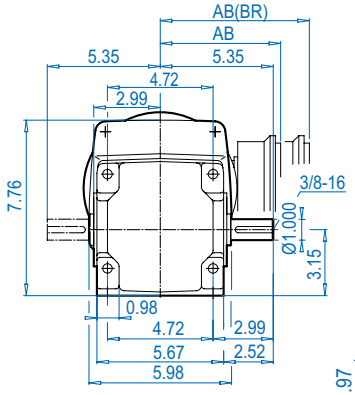

SK 92372AX

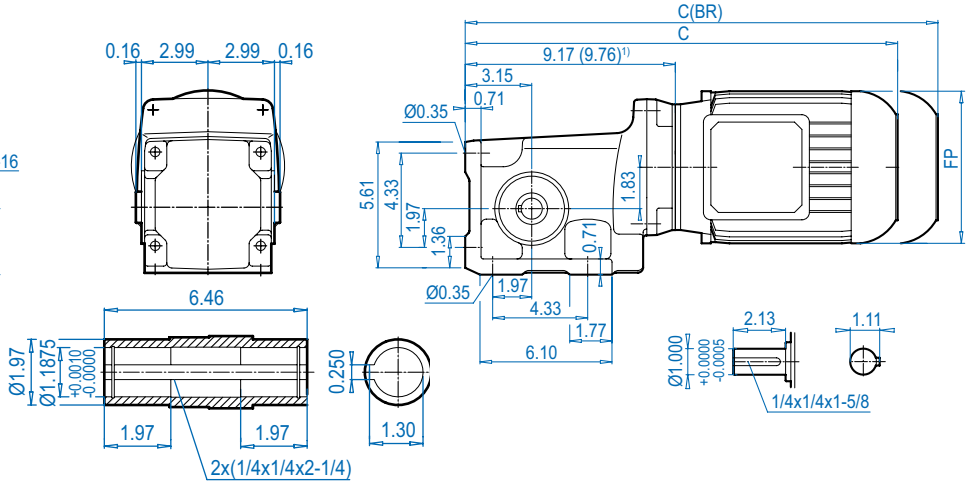

SK 92372VF

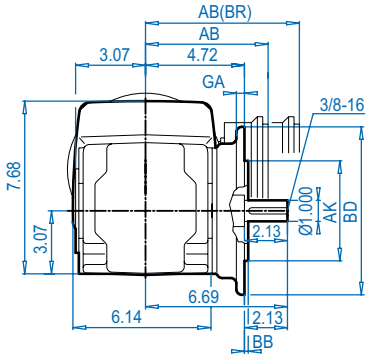

SK 92372AF

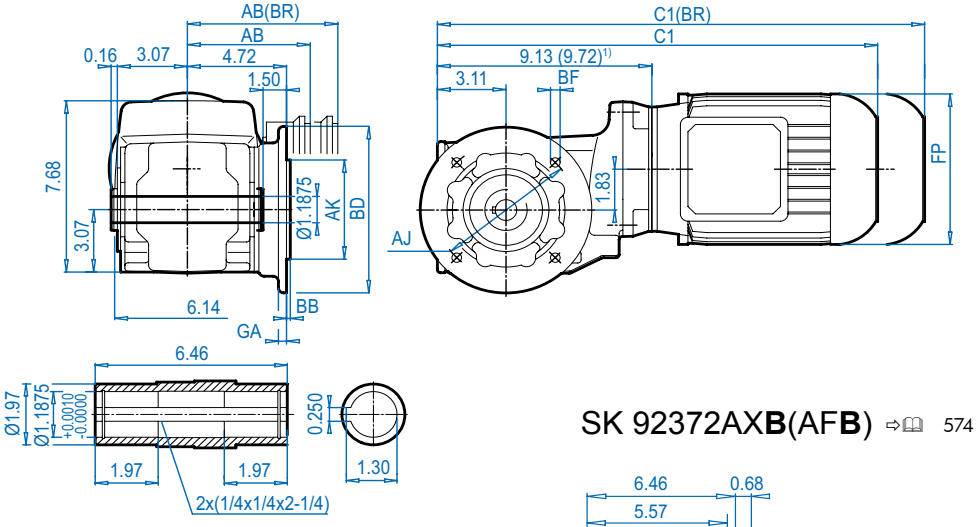

SK 92372AX**B**(AF**B**) ⇨🕮 574

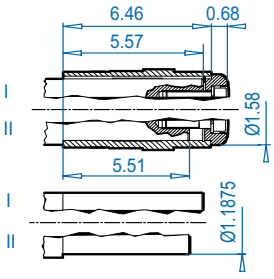

Mounting flange

BD (mm)	AJ	AK	BB	BF	GA
6.30 (160)	5.12	4.331 + 0.0005 - 0.0004	0.14	0.35	0.47
7.87 (200)	6.50	5.118 + 0.0005 - 0.0004	0.14	0.43	0.47

Motor dimensions

Standard efficiency	63S/L	71S/L	80S/L	90S/L[1)]	100L[1)]		For Other Connection Possibilities please see ⇨🕮 554 & 556
Energy efficiency			80LH	90SH/LH[1)]	100LH[1)]	112MH[1)]	
AB	4.53	4.88	5.59	5.79	6.65	7.05	
AB (BR)	4.84	5.24	5.63	5.83	6.26	6.69	
C1	16.69	17.56	18.43	20.59	21.77	22.56	
C1 (BR)	18.90	19.84	20.94	23.54	25.35	26.22	
C	16.73	17.60	18.46	20.63	21.81	22.60	
C (BR)	18.94	19.88	20.98	23.58	25.39	26.26	
FP	5.12	5.71	6.50	7.20	7.91	8.98	

(BR) denotes Brakemotor

Send Quote Requests to info@automatedpt.com
Call +1(800)985-6929 To Order or Order Online At Nordgearmotors.com

DRIVESYSTEMS

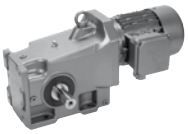

SK 92372 + Motor

SK 92372AZ

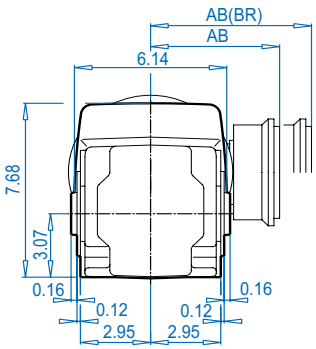

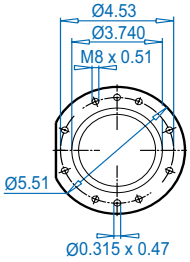

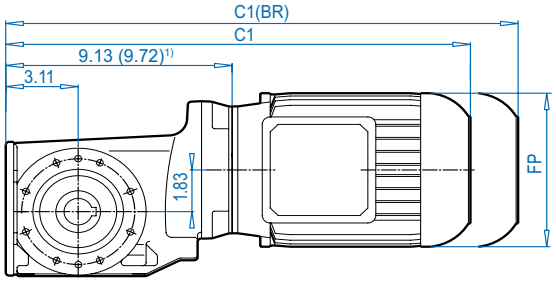

SK 92372AZ**D**

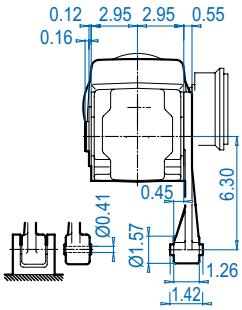

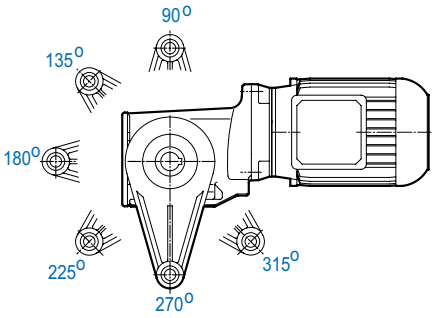

SK 92372AZ**SH**

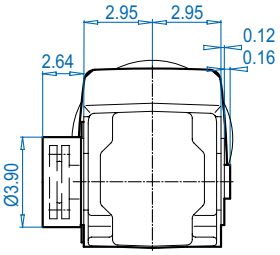

SK 92372AZ

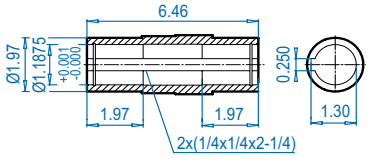

SK 92372AZ**B** ⇨🕮 574

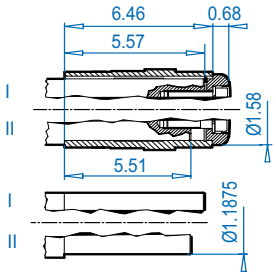

SK 92372AZ**S** ⇨🕮 571

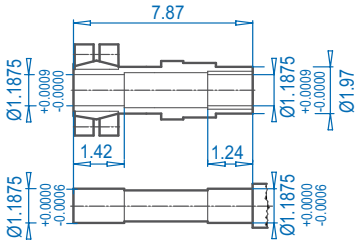

Motor dimensions

Standard efficiency	63S/L	71S/L	80S/L	90S/L[1)]	100L[1)]		ForOtherConnection Possibilitiespleasesee ⇨🕮 554 & 556
Energy efficiency			80LH	90SH/LH[1)]	100LH[1)]	112MH[1)]	
AB	4.53	4.88	5.59	5.79	6.65	7.05	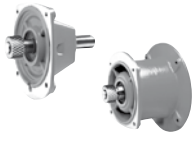
AB (BR)	4.84	5.24	5.63	5.83	6.26	6.69	
C1	16.69	17.56	18.43	20.59	21.77	22.56	
C1 (BR)	18.90	19.84	20.94	23.54	25.35	26.22	
FP	5.12	5.71	6.50	7.20	7.91	8.98	

(BR) denotes Brakemotor

Dimensions in Inches DIMENSIONS
ALTERNATE SHAFTS SEE PAGES 566 - 573

Send Quote Requests to info@automatedpt.com
Call +1(800)985-6929 To Order or Order Online At Nordgearmotors.com

SK 92372 + NEMA




SK 92372

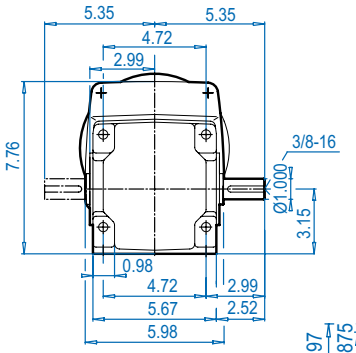

SK 92372AX

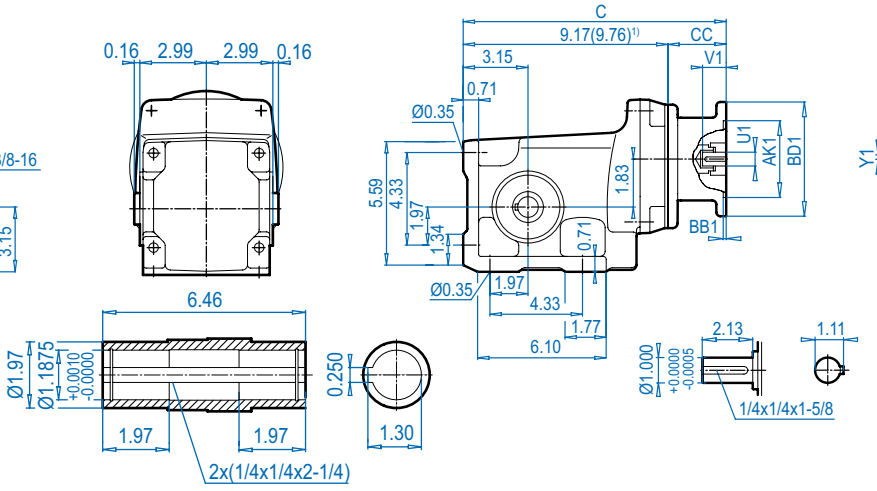

NEMA Input

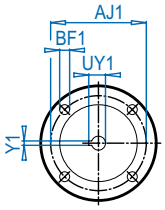

DIMENSIONS
Dimensions in Inches

SK 92372VF

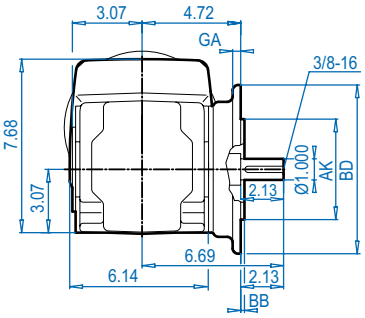

SK 92372AF

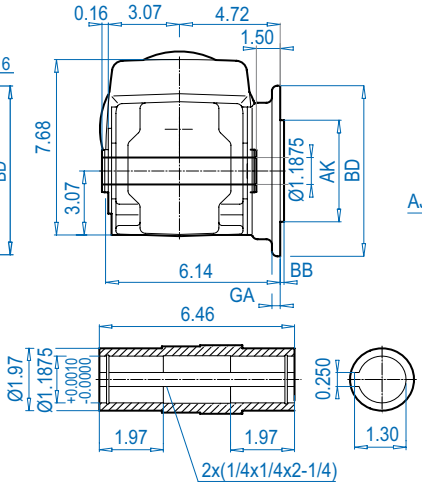

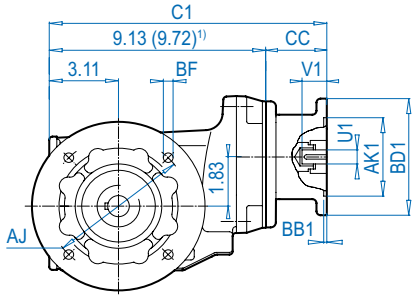

SK 92372AX**B**(AF**B**) ⇨🕮 574

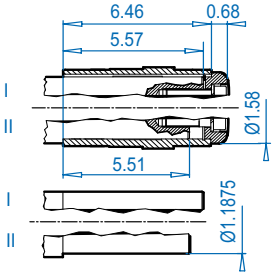

Mounting flange

BD (mm)	AJ	AK	BB	BF	GA
6.30 (160)	5.12	4.331 + 0.0005 - 0.0004	0.14	0.35	0.47
7.87 (200)	6.50	5.118 + 0.0005 - 0.0004	0.14	0.43	0.47

NEMA Dimensions

Type	AJ1	AK1	BB1	BD1	BF1	U1	V1	UY1	Y1	C	C1	CC
56C	5.88	4.500	0.18	6.61	0.43	0.625	2.06	0.71	0.188	13.46	13.43	4.29
140TC	5.88	4.500	0.18	6.61	0.43	0.875	2.12	0.96	0.188	13.46	13.43	4.29
180TC[1)]	7.25	8.500	0.23	9.17	0.59	1.125	2.62	1.24	0.250	15.27	15.24	5.51

ALTERNATE SHAFTS SEE PAGES 566 - 573

Send Quote Requests to info@automatedpt.com
Call +1(800)985-6929 To Order or Order Online At Nordgearmotors.com

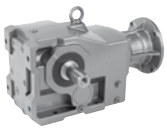


SK 92372 + NEMA

SK 92372AZ

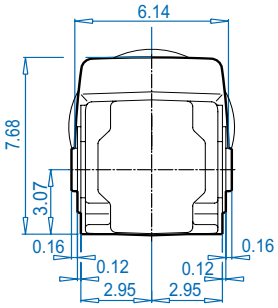

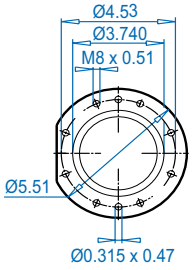

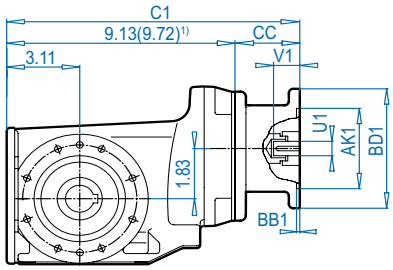

NEMA Input

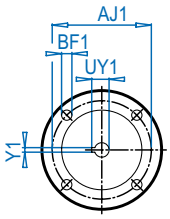

Dimensions in inches
DIMENSIONS

SK 92372AZ**D**

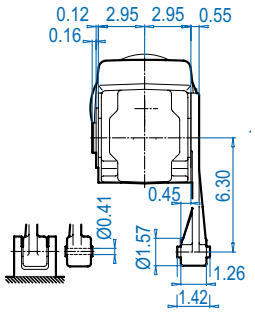

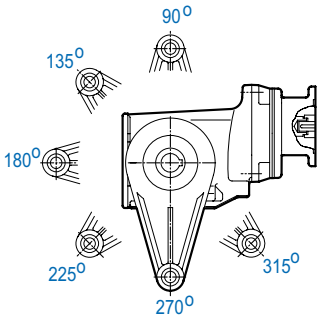

SK 92372AZ**SH**

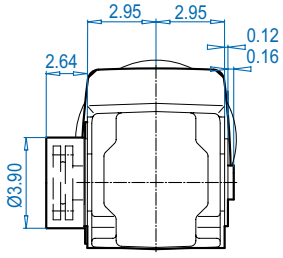

SK 92372AZ

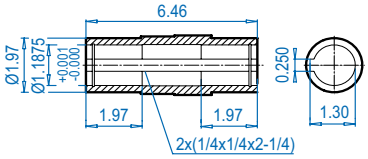

SK 92372AZ**B** ⇨🕮 574

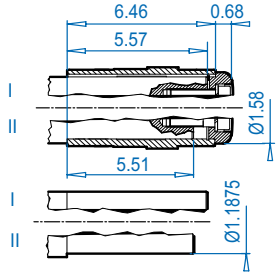

SK 92372AZ**S** ⇨🕮 571

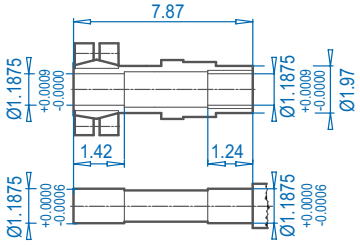

ALTERNATE SHAFTS SEE PAGES 566 - 573

NEMA Dimensions

Type	AJ1	AK1	BB1	BD1	BF1	U1	V1	UY1	Y1	C1	CC
56C	5.88	4.500	0.18	6.61	0.43	0.625	2.06	0.71	0.188	13.43	4.29
140TC	5.88	4.500	0.18	6.61	0.43	0.875	2.12	0.96	0.188	13.43	4.29
180TC[1)]	7.25	8.500	0.23	9.17	0.59	1.125	2.62	1.24	0.250	15.24	5.51

Send Quote Requests to info@automatedpt.com
Call +1(800)985-6929 To Order or Order Online At Nordgearmotors.com

SK 92672 + Motor




DRIVESYSTEMS

DIMENSIONS
Dimensions in Inches
ALTERNATE SHAFTS SEE PAGES 566 - 573

SK 92672

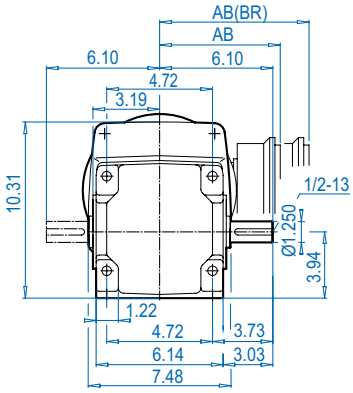

SK 92672AX

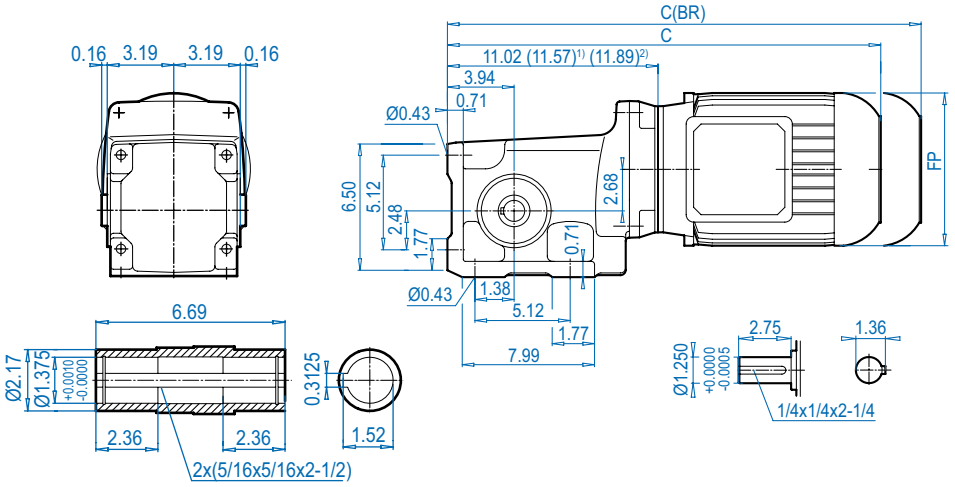

SK 92672VF

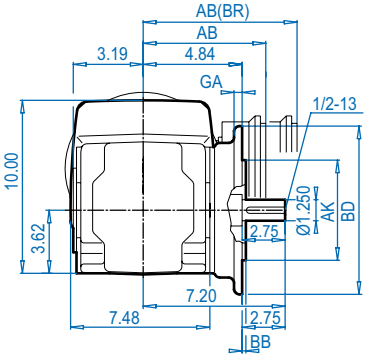

SK 92672AF

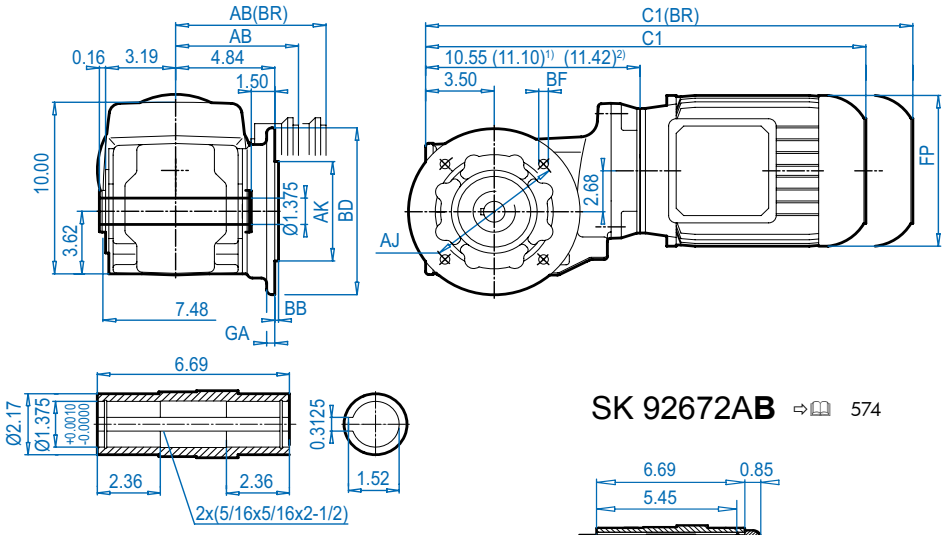

SK 92672AB ⇨🕮 574

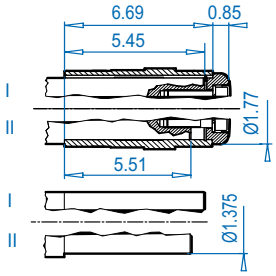

Mounting flange

BD (mm)	AJ	AK	BB	BF	GA
6.30 (160)	5.12	4.331 + 0.0005 - 0.0004	0.14	0.35	0.47
7.87 (200)	6.50	5.118 + 0.0005 - 0.0004	0.14	0.43	0.47

Motor dimensions

Standard eff.	63S/L	71S/L	80S/L	90S/L[1)]	100L[1)]		132S[2)]	For Other Connection Possibilities please see ⇨🕮 554 & 556
Energy eff.			80LH	90SH/LH[1)]	100LH[1)]	112MH[2)]	132SH[2)]	
AB	4.53	4.88	5.59	5.79	6.65	7.05	8.03	
AB (BR)	4.84	5.24	5.63	5.83	6.26	6.69	7.72	
C1	18.11	18.98	19.84	21.97	23.15	24.25	27.83	
C1 (BR)	20.31	21.26	22.36	24.92	26.73	27.91	31.81	
C	18.58	19.45	20.31	22.44	23.62	24.72	28.31	
C (BR)	20.79	21.73	22.83	25.39	27.20	28.39	32.48	
FP	5.12	5.71	6.50	7.20	7.91	8.98	10.47	

(BR) denotes Brakemotor

Send Quote Requests to info@automatedpt.com
Call +1(800)985-6929 To Order or Order Online At Nordgearmotors.com

DRIVESYSTEMS

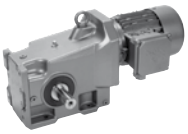

SK 92672 + Motor

SK 92672AZ

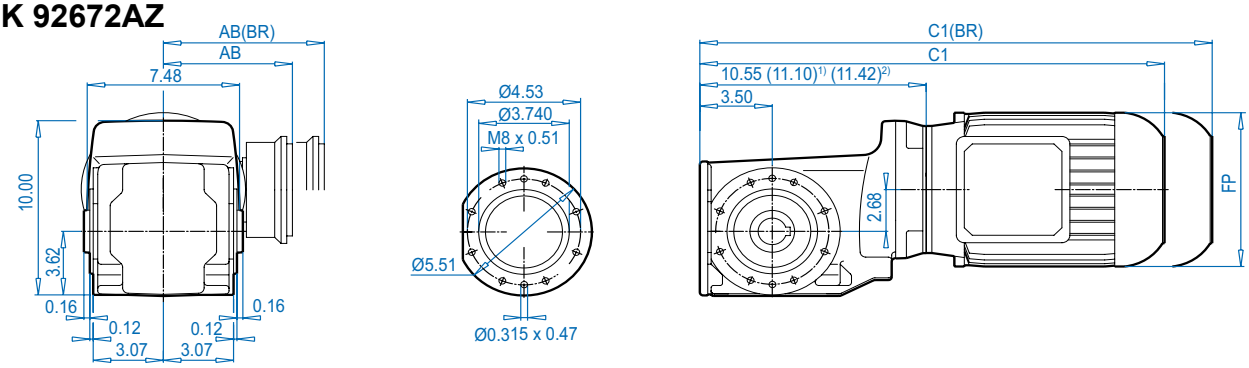

DIMENSIONS
Dimensions in Inches

SK 92672AZ**D**

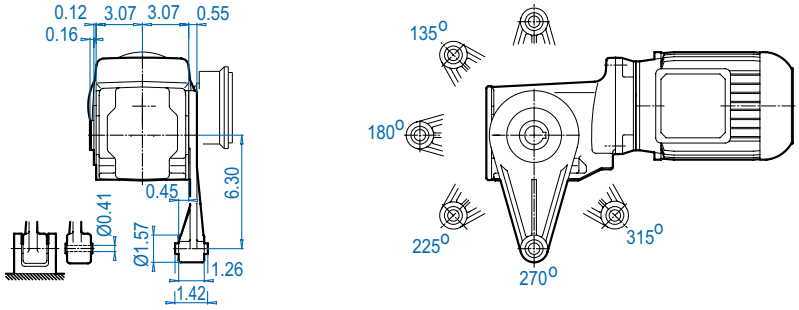

SK 92672AZ**SH**

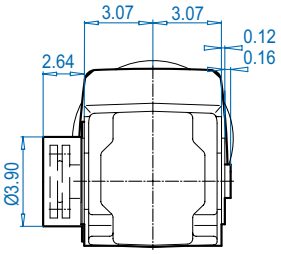

SK 92672AZ

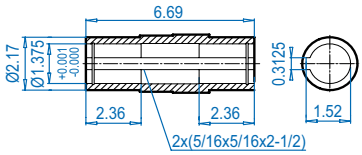

SK 92672AZ**B** ⇨🕮 574

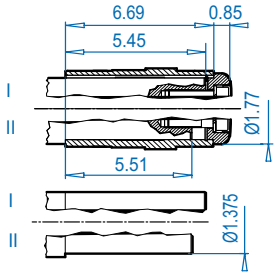

SK 92672AZ**S** ⇨🕮 571

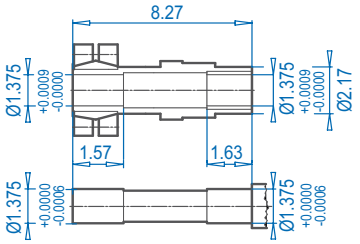

ALTERNATE SHAFTS SEE PAGES 566 - 573

Motor dimensions

Standard efficiency	63S/L	71S/L	80S/L	90S/L[1)]	100L[1)]		132S[2)]	For Other Connection Possibilities please see ⇨🕮 554 & 556
Energy efficiency			80LH	90SH/LH[1)]	100LH[1)]	112MH[2)]	132SH[2)]	
AB	4.53	4.88	5.59	5.79	6.65	7.05	8.03	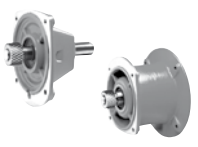
AB (BR)	4.84	5.24	5.63	5.83	6.26	6.69	7.72	
C1	18.11	18.98	19.84	21.97	23.15	24.25	27.83	
C1 (BR)	20.31	21.26	22.36	24.92	26.73	27.91	31.81	
FP	5.12	5.71	6.50	7.20	7.91	8.98	10.47	

(BR) denotes Brakemotor

Send Quote Requests to info@automatedpt.com
Call +1(800)985-6929 To Order or Order Online At Nordgearmotors.com

SK 92672 + NEMA




DRIVESYSTEMS

SK 92672

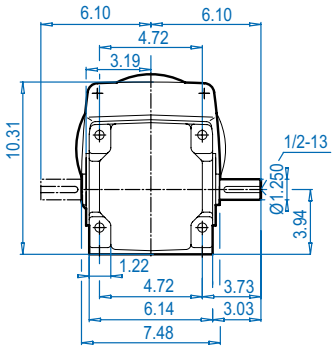

SK 92672AX

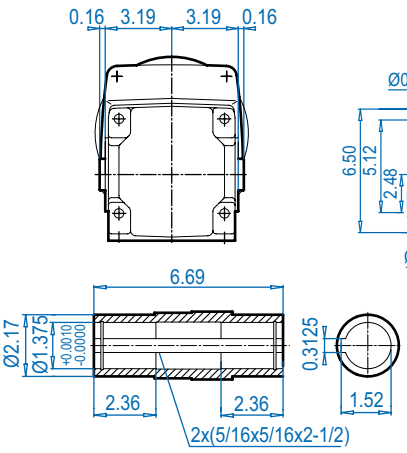

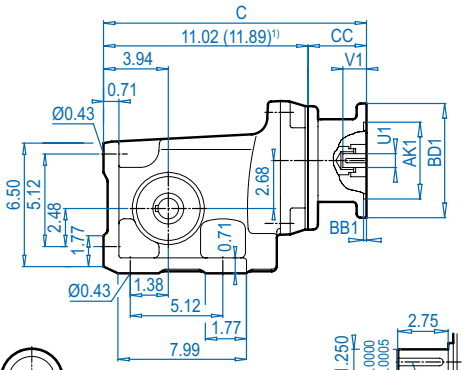

NEMA Input

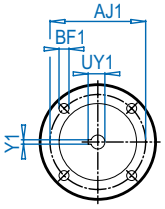

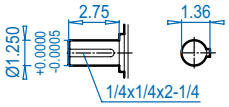

SK 92672VF

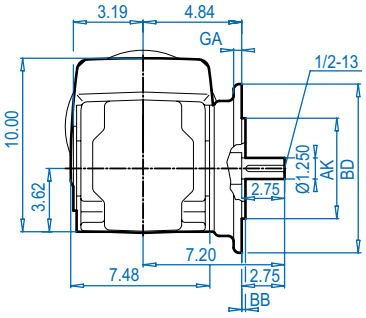

SK 92672AF

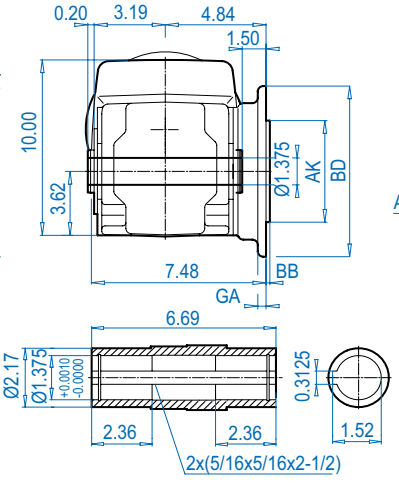

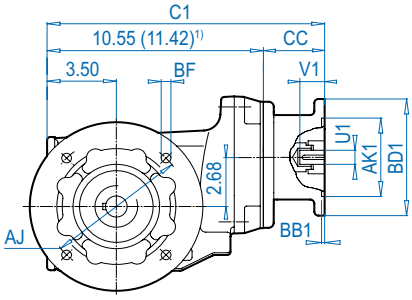

SK 92672AB ⇨🕮 574

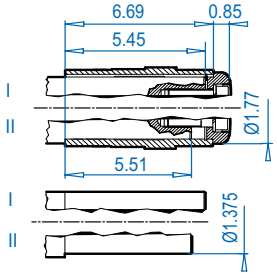

Mounting flange

BD (mm)	AJ	AK	BB	BF	GA
6.30 (160)	5.12	4.331 + 0.0005 - 0.0004	0.14	0.35	0.47
7.87 (200)	6.50	5.118 + 0.0005 - 0.0004	0.14	0.43	0.47

NEMA Dimensions

Type	AJ1	AK1	BB1	BD1	BF1	U1	V1	UY1	Y1	C	C1	CC
56C	5.88	4.500	0.18	6.61	0.43	0.625	2.06	0.71	0.188	15.31	14.84	4.29
140TC	5.88	4.500	0.18	6.61	0.43	0.875	2.12	0.96	0.188	15.31	14.84	4.29
180TC1)	7.25	8.500	0.23	9.17	0.59	1.125	2.62	1.24	0.250	19.37	18.90	7.48
210TC1)	7.25	8.500	0.23	9.17	0.59	1.375	3.12	1.52	0.312	19.37	18.90	7.48

Send Quote Requests to info@automatedpt.com
Call +1(800)985-6929 To Order or Order Online At Nordgearmotors.com

DRIVESYSTEMS

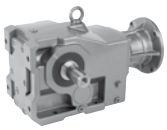



SK 92672 + NEMA

SK 92672AZ

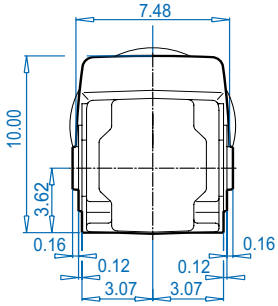

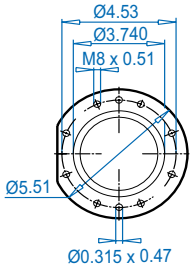

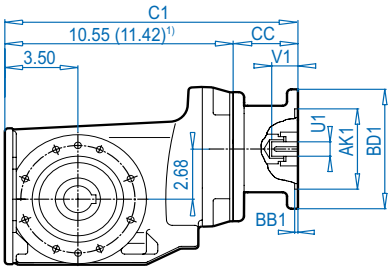

NEMA Input

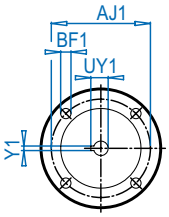

Dimensions in inches
DIMENSIONS

SK 92672AZ**D**

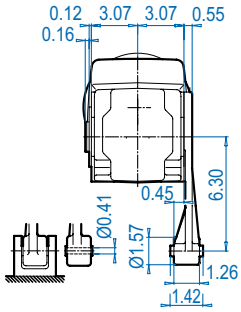

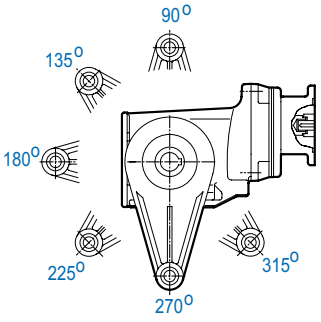

SK 92672AZ**SH**

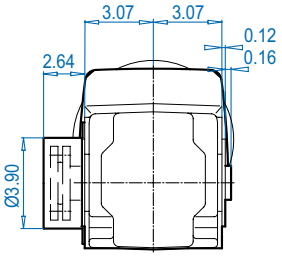

SK 92672AZ

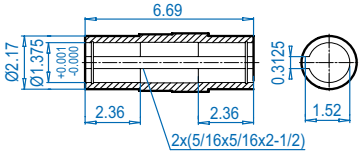

SK 92672AZ**B** ⇨🕮 574

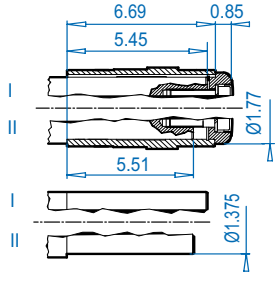

SK 92672AZ**S** ⇨🕮 571

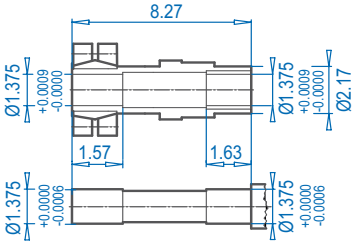

ALTERNATE SHAFTS SEE PAGES 566 - 573

NEMA Dimensions

Type	AJ1	AK1	BB1	BD1	BF1	U1	V1	UY1	Y1	C1	CC
56C	5.88	4.500	0.18	6.61	0.43	0.625	2.06	0.71	0.188	14.84	4.29
140TC	5.88	4.500	0.18	6.61	0.43	0.875	2.12	0.96	0.188	14.84	4.29
180TC1)	7.25	8.500	0.23	9.17	0.59	1.125	2.62	1.24	0.250	18.90	7.48
210TC1)	7.25	8.500	0.23	9.17	0.59	1.375	3.12	1.52	0.312	18.90	7.48

Send Quote Requests to info@automatedpt.com
Call +1(800)985-6929 To Order or Order Online At Nordgearmotors.com

SK 92772 + Motor




SK 92772

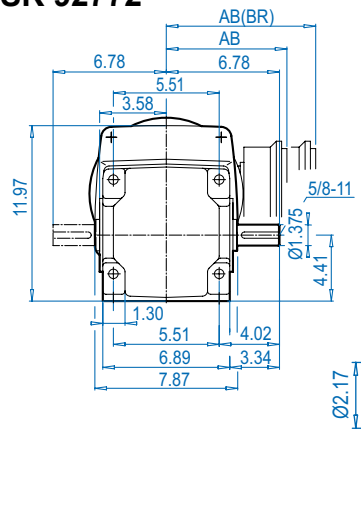

SK 92772AX

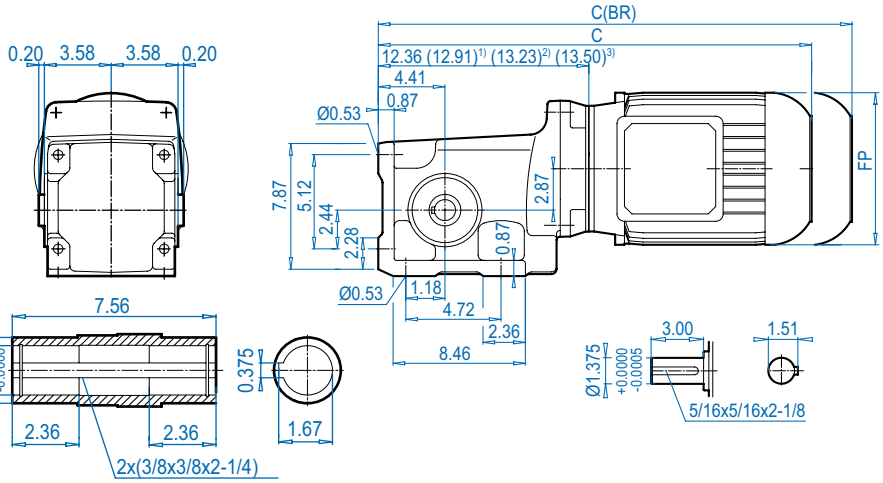

SK 92772VF

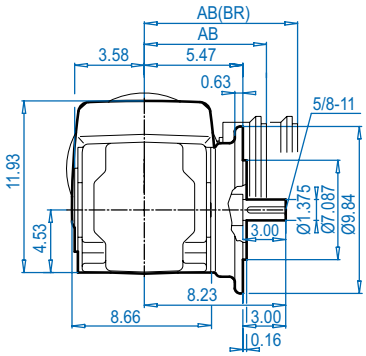

SK 92772AF

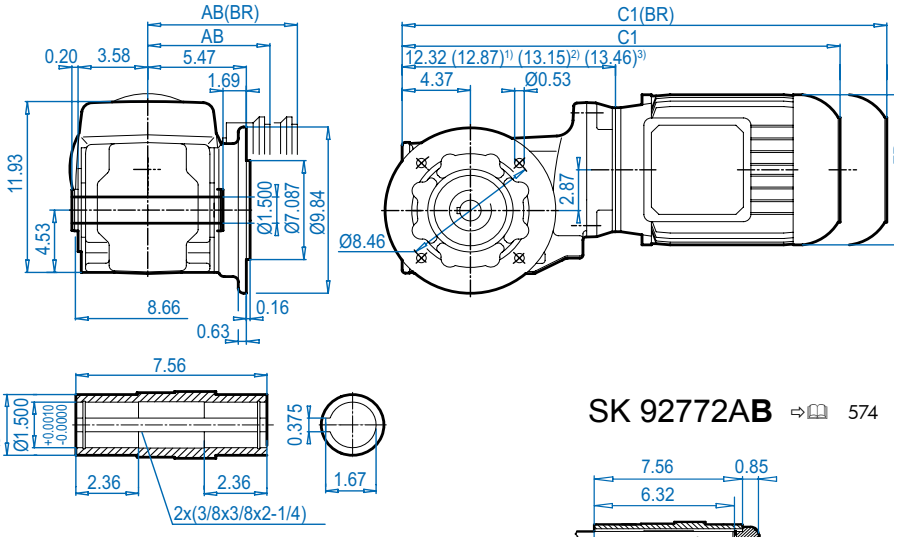

SK 92772AB ⇨🕮 574

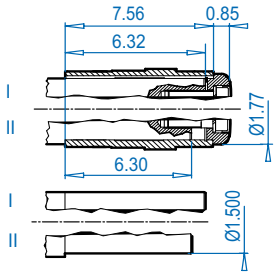

Motor dimensions

Standard efficiency	80S/L	90S/L[1)]	100L[1)]		132S[3)]	For Other Connection Possibilities please see ⇨🕮 554 & 556
Energy efficiency	80LH	90SH/LH[1)]	100LH[1)]	112MH[2)]	132SH[3)]	
AB	5.59	5.79	6.65	7.05	8.03	
AB (BR)	5.63	5.83	6.26	6.69	7.72	
C1	21.61	23.74	24.92	25.98	29.88	
C1 (BR)	24.13	26.69	28.50	29.64	33.86	
C	21.65	23.78	24.96	26.06	29.92	
C (BR)	24.17	26.73	28.54	29.72	33.90	
FP	6.50	7.20	7.91	8.98	10.47	

(BR) denotes Brakemotor

Send Quote Requests to info@automatedpt.com
Call +1(800)985-6929 To Order or Order Online At Nordgearmotors.com

DRIVESYSTEMS



SK 92772 + Motor

SK 92772AZ

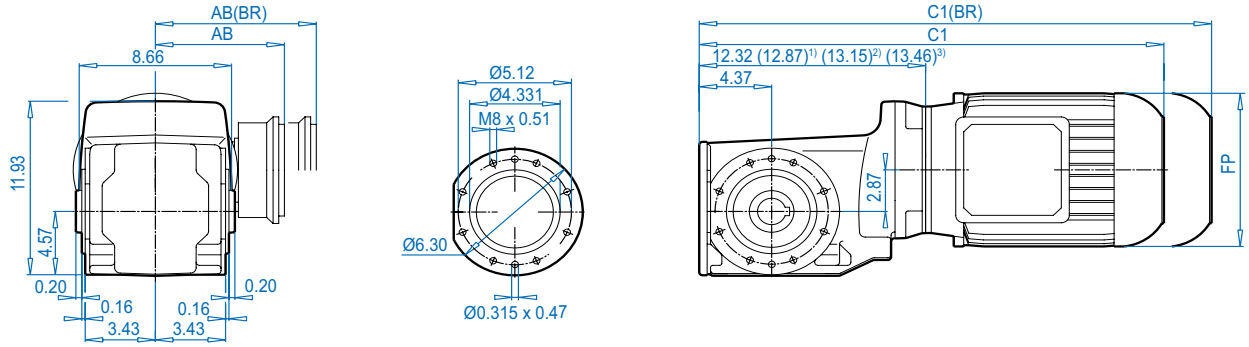

Dimensions in Inches
DIMENSIONS

SK 92772AZ**D**

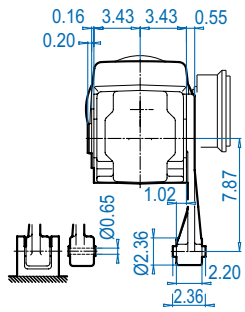

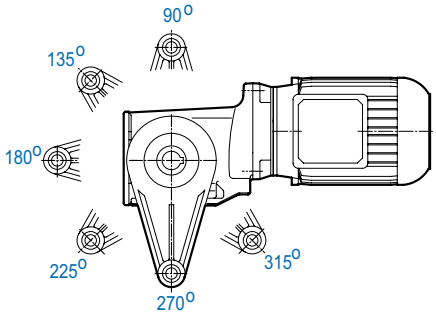

SK 92772AZ**SH**

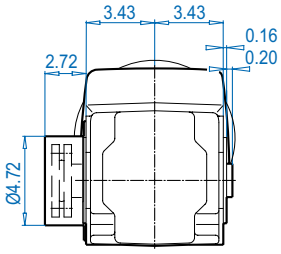

SK 92772AZ

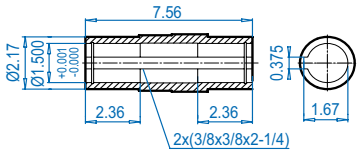

SK 92772AZ**B** ⇨🕮 574

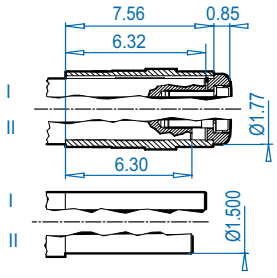

SK 92772AZ**S** ⇨🕮 571

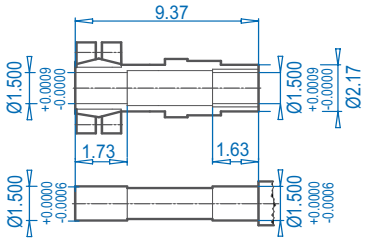

Motor dimensions

Standard efficiency	80S/L	90S/L[1)]	100L[1)]		132S[3)]	For Other Connection Possibilities please see ⇨🕮 554 & 556
Energy efficiency	80LH	90SH/LH[1)]	100LH[1)]	112MH[2)]	132SH[3)]	
AB	5.59	5.79	6.65	7.05	8.03	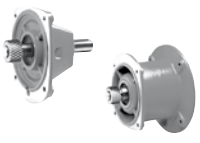
AB (BR)	5.63	5.83	6.26	6.69	7.72	
C1	21.61	23.74	24.92	25.98	29.88	
C1 (BR)	24.13	26.69	28.50	29.64	33.86	
FP	6.50	7.20	7.91	8.98	10.47	

(BR) denotes Brakemotor

ALTERNATE SHAFTS SEE PAGES 566 - 573

Send Quote Requests to info@automatedpt.com
Call +1(800)985-6929 To Order or Order Online At Nordgearmotors.com

SK 92772 + NEMA




SK 92772

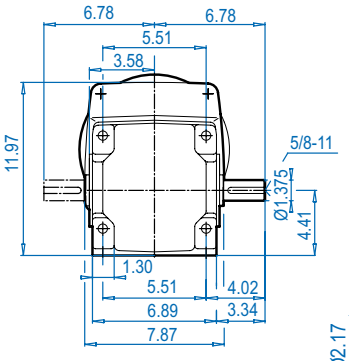

SK 92772AX

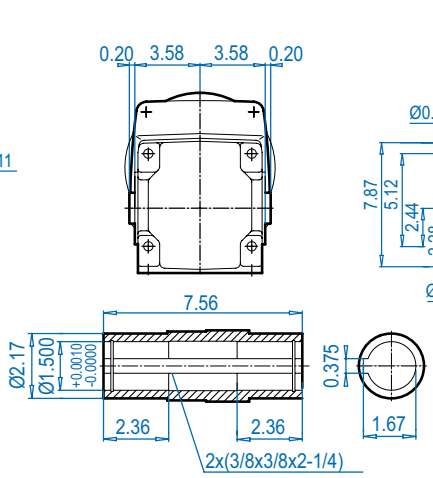

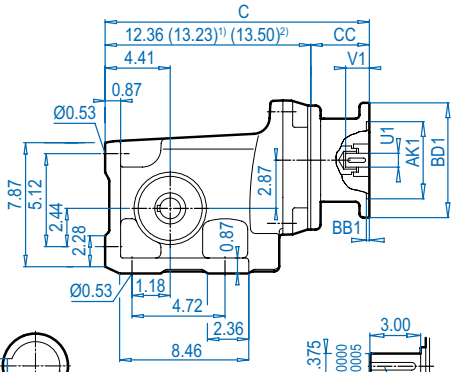

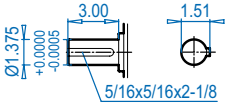

NEMA Input

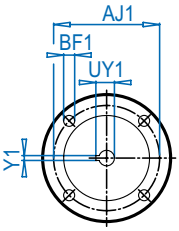

SK 92772VF

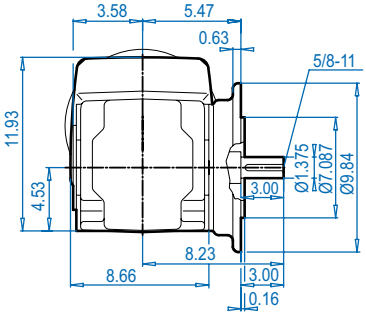

SK 92772AF

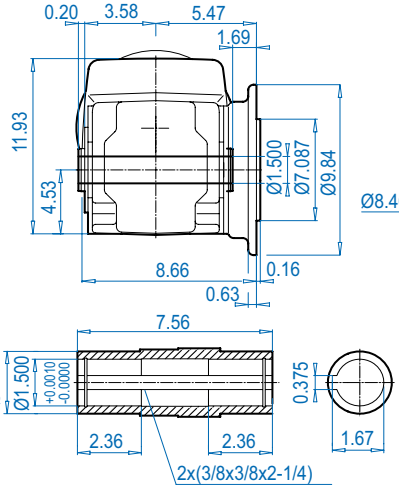

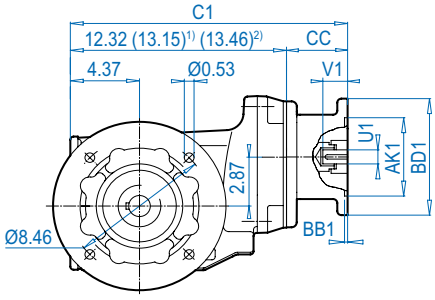

SK 92772AX**B**(AF**B**) ⇨🕮 574

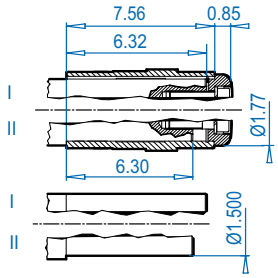

NEMA Dimensions

Type	AJ1	AK1	BB1	BD1	BF1	U1	V1	UY1	Y1	C	C1	CC
56C	5.88	4.500	0.18	6.61	0.43	0.625	2.06	0.71	0.188	15.31	14.84	4.29
140TC	5.88	4.500	0.18	6.61	0.43	0.875	2.12	0.96	0.188	15.31	14.84	4.29
180TC[1)]	7.25	8.500	0.23	9.17	0.59	1.125	2.62	1.24	0.250	19.37	18.90	7.48
210TC[1]	7.25	8.500	0.23	9.17	0.59	1.375	3.12	1.52	0.312	19.37	18.90	7.48
250TC	7.25	8.500	0.23	9.17	0.59	1.625	3.75	1.80	0.375	21.59	21.54	8.09

Send Quote Requests to info@automatedpt.com
Call +1(800)985-6929 To Order or Order Online At Nordgearmotors.com

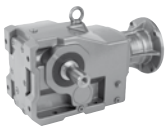


SK 92772 + NEMA

SK 92772AZ

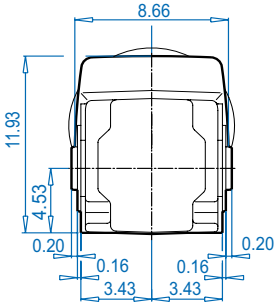

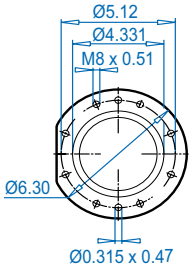

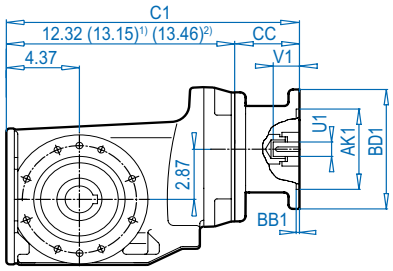

NEMA Input

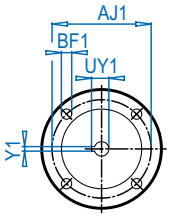

Dimensions in inches
DIMENSIONS

SK 92772AZ**D**

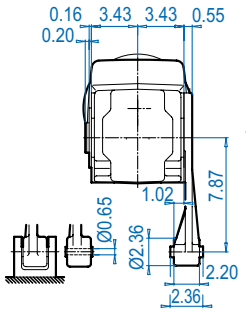

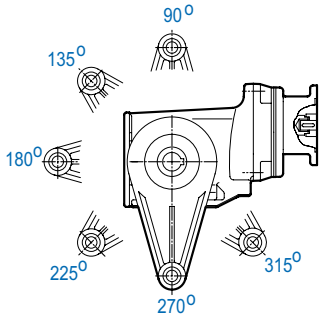

SK 92772AZ**SH**

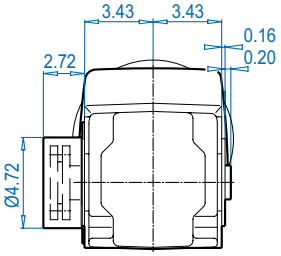

SK 92772AZ

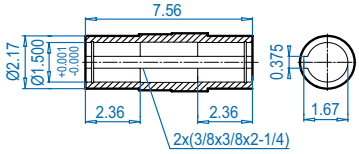

SK 92772AZ**B** ⇨🕮 574

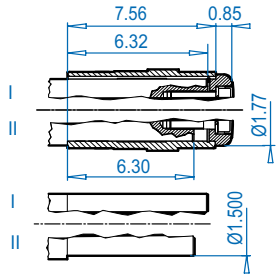

SK 92772AZ**S** ⇨🕮 571

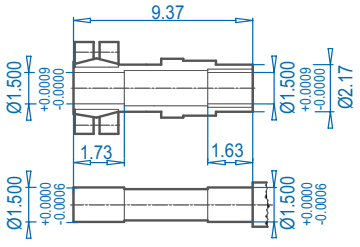

NEMA Dimensions

Type	AJ1	AK1	BB1	BD1	BF1	U1	V1	UY1	Y1	C1	CC
56C	5.88	4.500	0.18	6.61	0.43	0.625	2.06	0.71	0.188	14.84	4.29
140TC	5.88	4.500	0.18	6.61	0.43	0.875	2.12	0.96	0.188	14.84	4.29
180TC[1)]	7.25	8.500	0.23	9.17	0.59	1.125	2.62	1.24	0.250	18.90	7.48
210TC[1]	7.25	8.500	0.23	9.17	0.59	1.375	3.12	1.52	0.312	18.90	7.48
210TC	7.25	8.500	0.23	9.17	0.59	1.625	3.75	1.80	0.375	21.54	8.09

ALTERNATE SHAFTS SEE PAGES 566 - 573

Send Quote Requests to info@automatedpt.com
Call +1(800)985-6929 To Order or Order Online At Nordgearmotors.com

SK 9012.1 + Motor




DRIVESYSTEMS

DIMENSIONS
Dimensions in Inches
ALTERNATE SHAFTS SEE PAGES 566 - 573

SK 9012.1

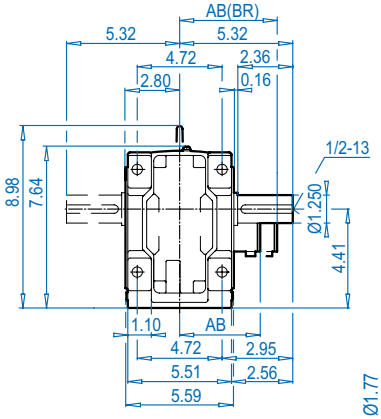

SK 9012.1AX

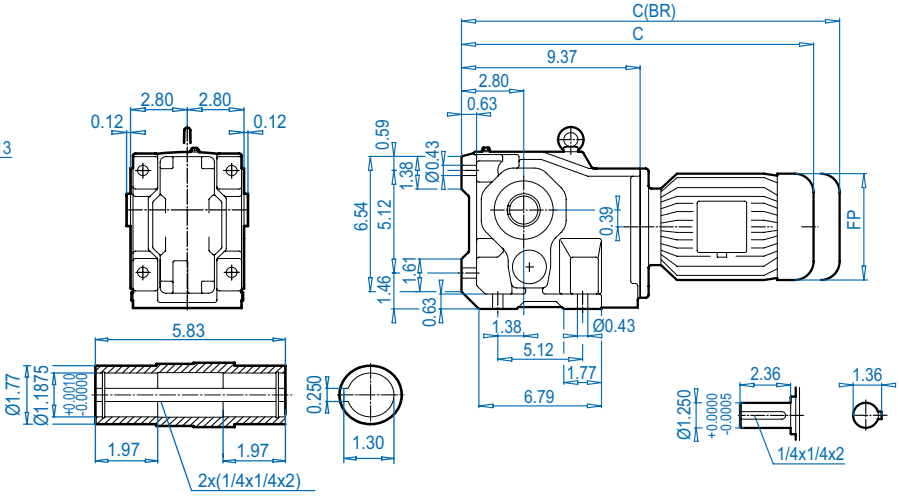

SK 9012.1VF

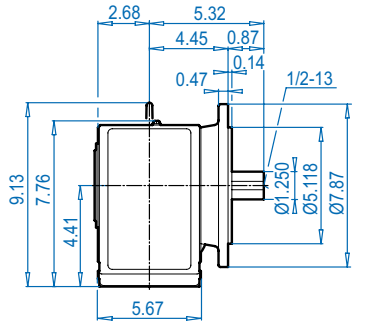

SK 9012.1AF

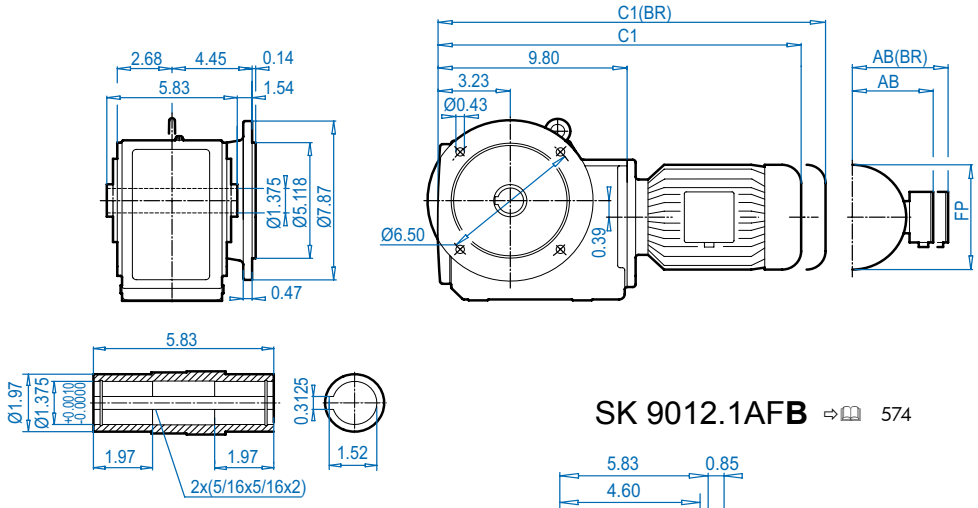

SK 9012.1AX**B** ⇨🕮 574

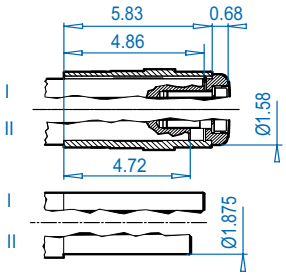

SK 9012.1AF**B** ⇨🕮 574

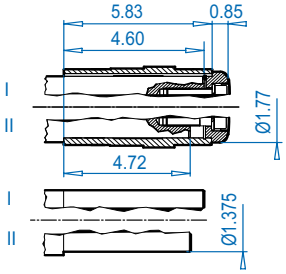

Motor dimensions

Standard efficiency	63S/L	71S/L	80S/L	90S/L	100L		For Other Connection Possibilities please see ⇨🕮 555 & 557
Energy efficiency			80LH	90SH/LH	100LH	112MH	
AB	4.53	4.88	5.59	5.79	6.65	7.05	
AB (BR)	4.84	5.24	5.63	5.83	6.26	6.69	
C1	17.52	19.09	20.08	21.69	22.87	23.78	
C1 (BR)	19.72	21.38	22.60	24.65	26.46	27.44	
C	17.09	18.66	19.65	21.26	22.44	23.35	
C (BR)	19.29	20.94	22.17	24.21	26.02	27.01	
FP	5.12	5.71	6.50	7.20	7.91	8.98	

(BR) denotes Brakemotor

Send Quote Requests to info@automatedpt.com
Call +1(800)985-6929 To Order or Order Online At Nordgearmotors.com

DRIVESYSTEMS





SK 9012.1 + Motor

SK 9012.1AZ

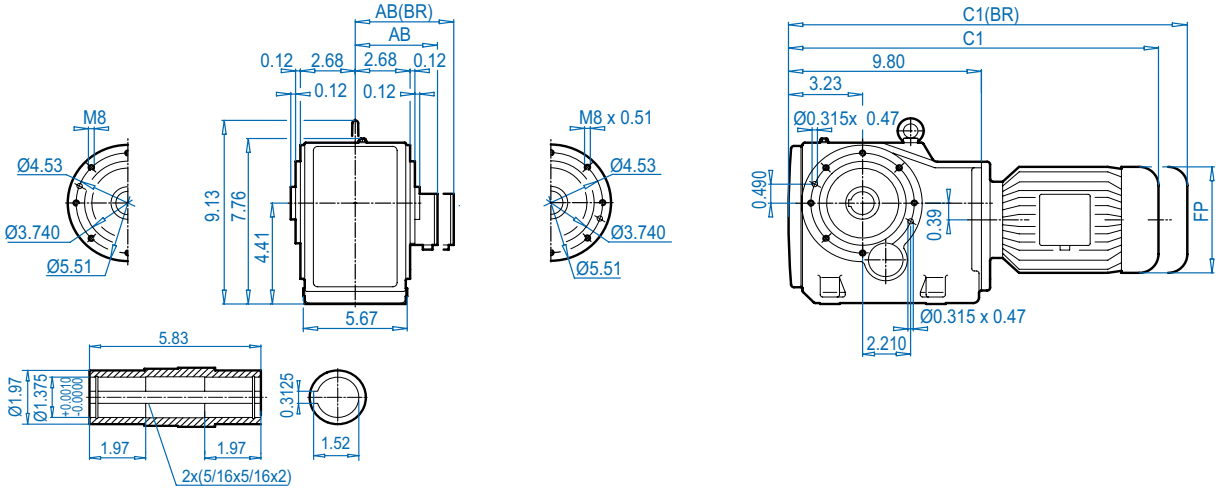

SK 9012.1AZ**K**

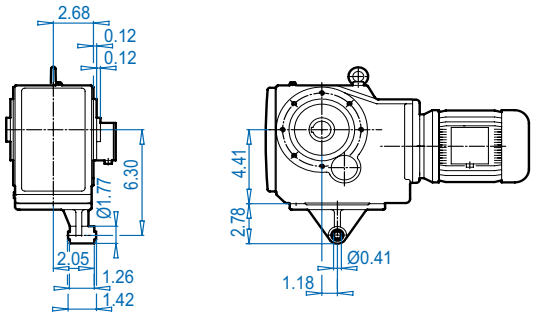

SK 9012.1AZ**D**

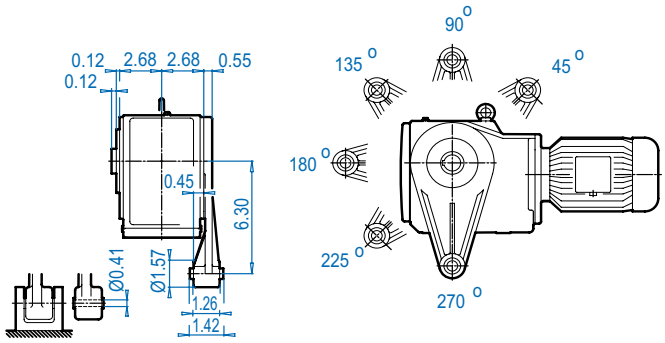

SK 9012.1AZ**B** ⇨🕮 574

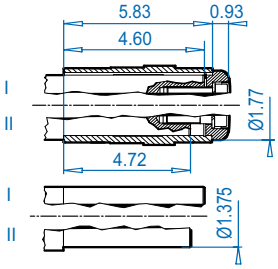

SK 9012.1AZ**S** ⇨🕮 571

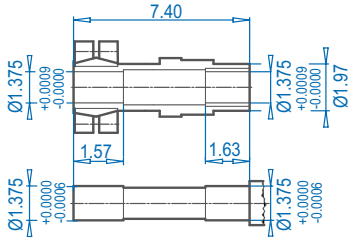

SK 9012.1AZ**SH**

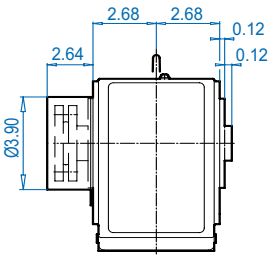

Motor dimensions

Standard efficiency	63S/L	71S/L	80S/L	90S/L	100L		For Other Connection Possibilities please see ⇨🕮 555 & 557
Energy efficiency			80LH	90SH/LH	100LH	112MH	
AB	4.53	4.88	5.59	5.79	6.65	7.05	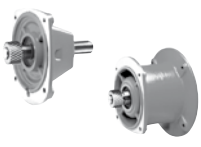
AB (BR)	4.84	5.24	5.63	5.83	6.26	6.69	
C1	17.52	19.09	20.08	21.69	22.87	23.78	
C1 (BR)	19.72	21.38	22.60	24.65	26.46	27.44	
FP	5.12	5.71	6.50	7.20	7.91	8.98	

(BR) denotes Brakemotor

Send Quote Requests to info@automatedpt.com
Call +1(800)985-6929 To Order or Order Online At Nordgearmotors.com

SK 9012.1 + NEMA




DRIVESYSTEMS

SK 9012.1

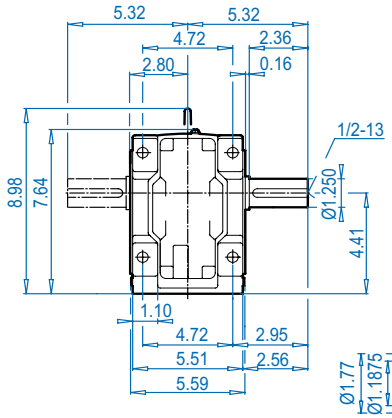

SK 9012.1AX

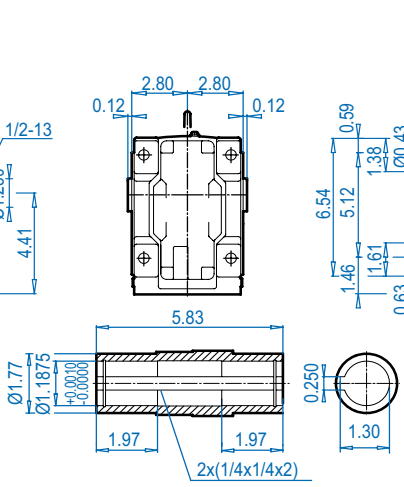

NEMA Input

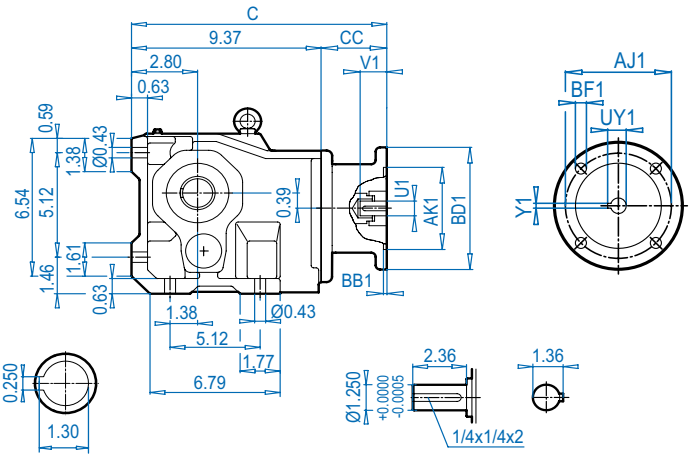

DIMENSIONS
Dimensions in Inches

SK 9012.1VF

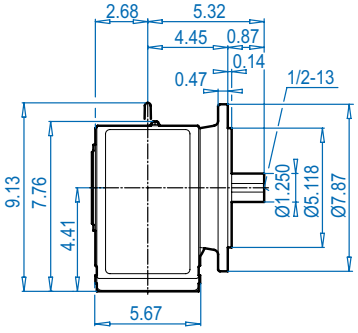

SK 9012.1AF

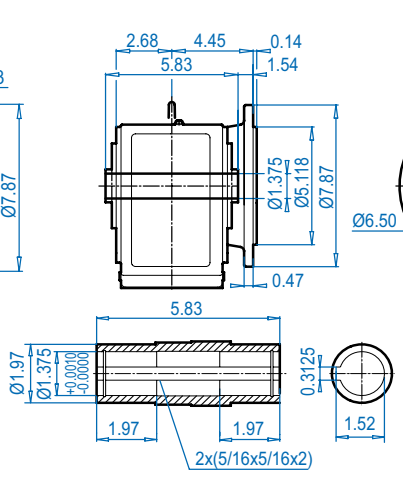

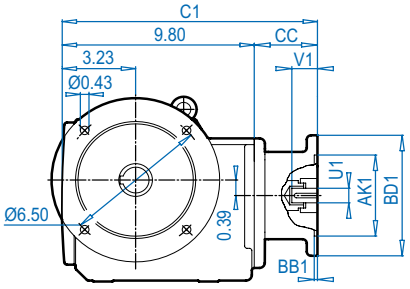

ALTERNATE SHAFTS SEE PAGES 566 - 573

SK 9012.1AXB ⇨🕮 574

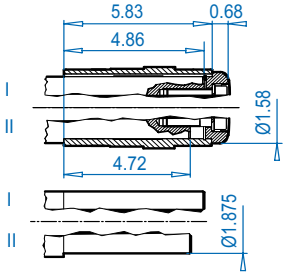

SK 9012.1AFB ⇨🕮 574

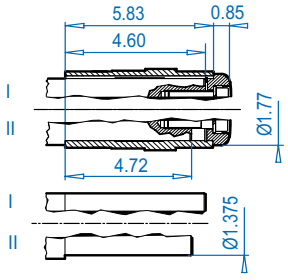

NEMA Dimensions

Type	AJ1	AK1	BB1	BD1	BF1	U1	V1	UY1	Y1	C	C1	CC
56C	5.88	4.500	0.18	6.54	0.43	0.625	2.06	0.71	0.188	13.87	14.30	4.45
140TC	5.88	4.500	0.18	6.54	0.43	0.875	2.12	0.96	0.188	13.87	14.40	4.45
180TC	7.25	8.500	0.23	9.17	0.59	1.125	2.62	1.24	0.250	15.02	15.45	5.65

Send Quote Requests to info@automatedpt.com
Call +1(800)985-6929 To Order or Order Online At Nordgearmotors.com

DRIVESYSTEMS

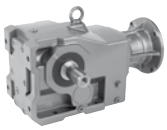



SK 9012.1 + NEMA

SK 9012.1AZ

NEMA Input

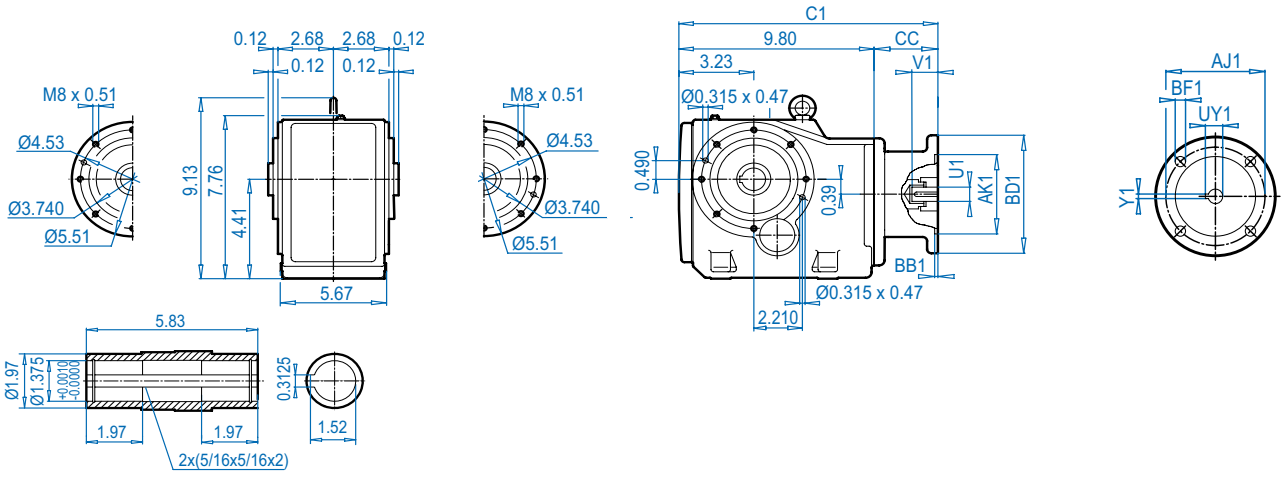

SK 9012.1AZ**K**

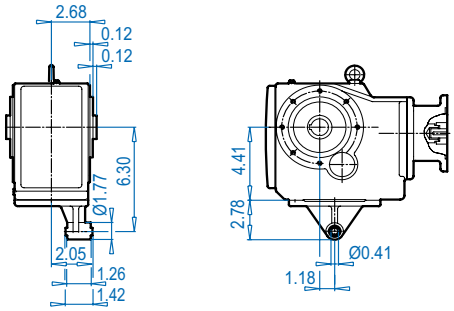

SK 9012.1AZ**D**

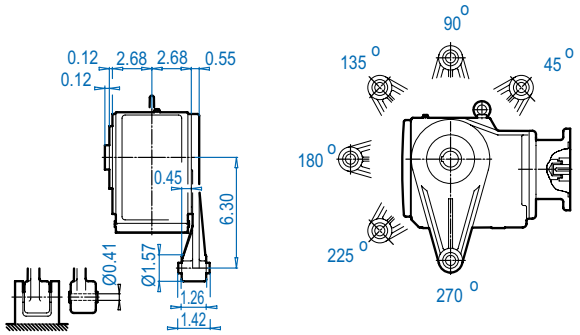

SK 9012.1AZ**B** ⇨🕮 574

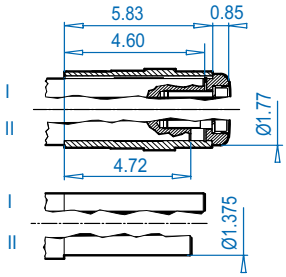

SK 9012.1AZ**S** ⇨🕮 571

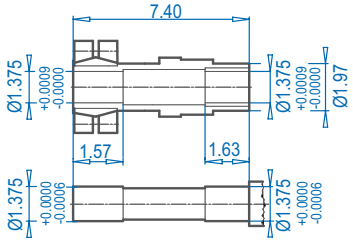

SK 9012.1AZ**SH**

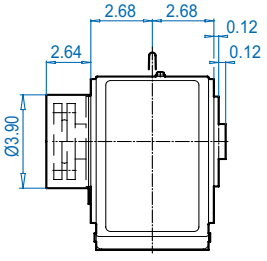

NEMA Dimensions

Type	AJ1	AK1	BB1	BD1	BF1	U1	V1	UY1	Y1	C1	CC
56C	5.88	4.500	0.18	6.54	0.43	0.625	2.06	0.71	0.188	14.30	4.45
140TC	5.88	4.500	0.18	6.54	0.43	0.875	2.12	0.96	0.188	14.30	4.45
180TC	7.25	8.500	0.23	9.17	0.59	1.125	2.62	1.24	0.250	15.45	5.65

Send Quote Requests to info@automatedpt.com
Call +1(800)985-6929 To Order or Order Online At Nordgearmotors.com

SK 9013.1 + Motor




DRIVESYSTEMS

DIMENSIONS
Dimensions in Inches

SK 9013.1

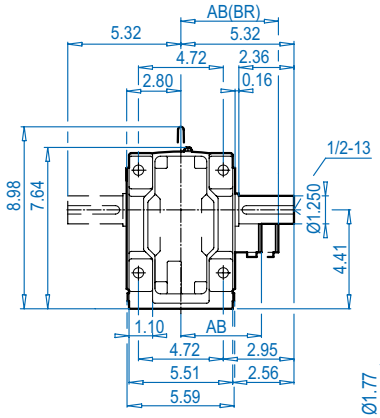

SK 9013.1AX

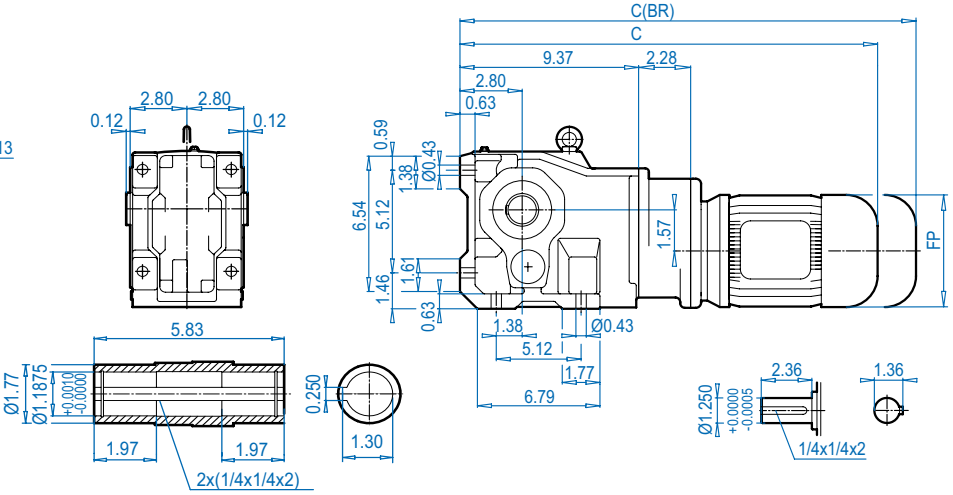

SK 9013.1VF

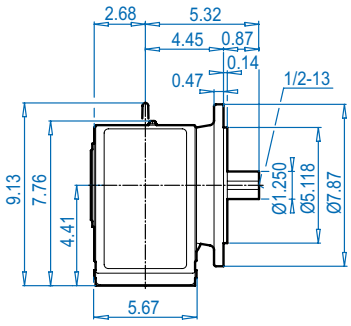

SK 9013.1AF

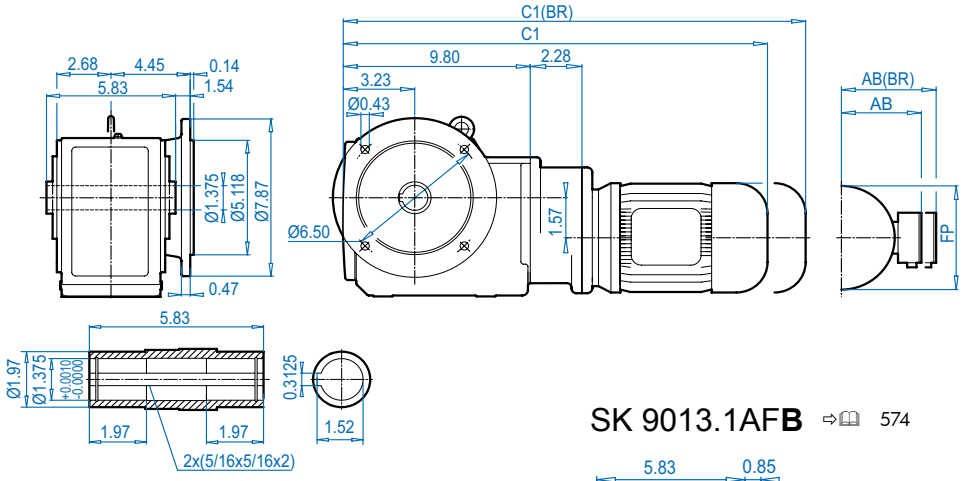

SK 9013.1AX**B** ⇨🕮 574

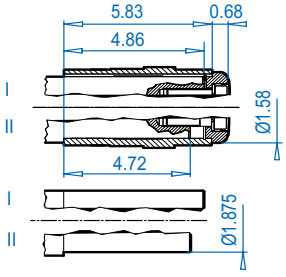

SK 9013.1AF**B** ⇨🕮 574

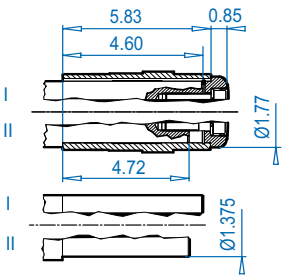

ALTERNATE SHAFTS SEE PAGES 566 - 573

Motor dimensions

Standard efficiency	63S/L				For Other Connection Possibilities please see ⇨🕮 555 & 557
Energy efficiency					
AB	4.53				
AB (BR)	4.84				
C1	19.80				
C1 (BR)	22.01				
C	19.37				
C (BR)	21.57				
FP	5.12				

(BR) denotes Brakemotor

Send Quote Requests to info@automatedpt.com
Call +1(800)985-6929 To Order or Order Online At Nordgearmotors.com

DRIVESYSTEMS



SK 9013.1 + Motor

SK 9013.1AZ

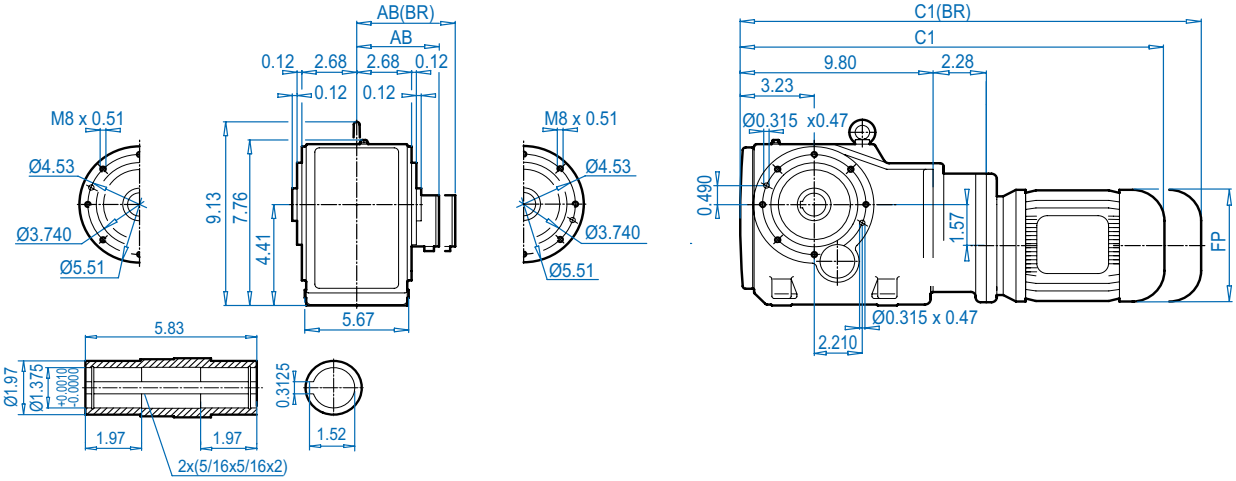

SK 9013.1AZ**K**

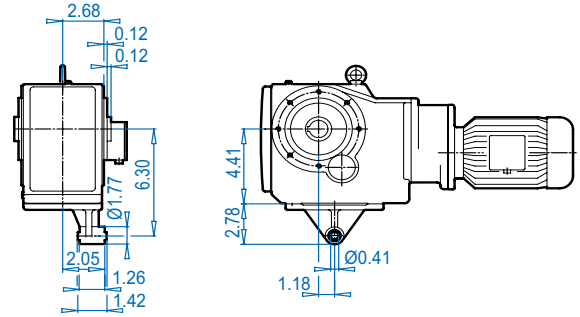

SK 9013.1AZ**D**

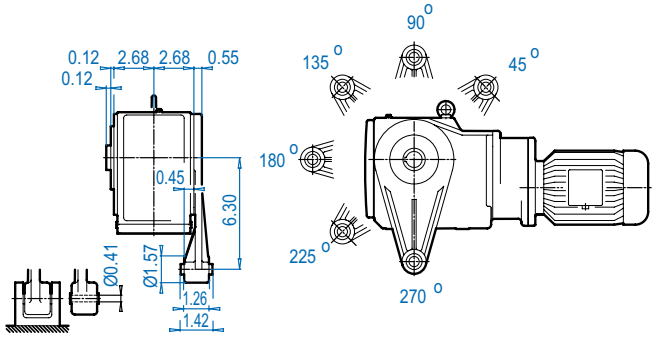

SK 9013.1AZ**B** ⇨🕮 574

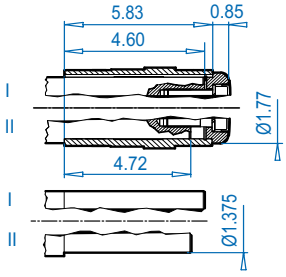

SK 9013.1AZ**S** ⇨🕮 571

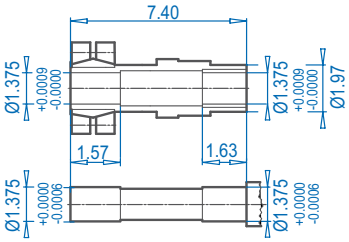

SK 9013.1AZ**SH**

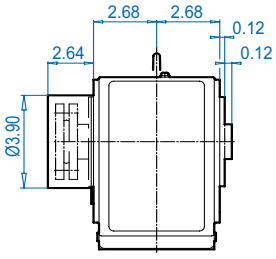

Motor dimensions

Standard efficiency	63S/L				For Other Connection Possibilities please see ⇨🕮 555 & 557
Energy efficiency					
AB	4.53				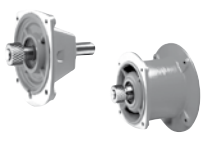
AB (BR)	4.84				
C1	19.80				
C1 (BR)	22.01				
FP	5.12				

(BR) denotes Brakemotor

Dimensions in Inches
DIMENSIONS
ALTERNATE SHAFTS SEE PAGES 566 - 573

Send Quote Requests to info@automatedpt.com
Call +1(800)985-6929 To Order or Order Online At Nordgearmotors.com

SK 9013.1 + NEMA




DRIVESYSTEMS

SK 9013.1

SK 9013.1AX

NEMA Input

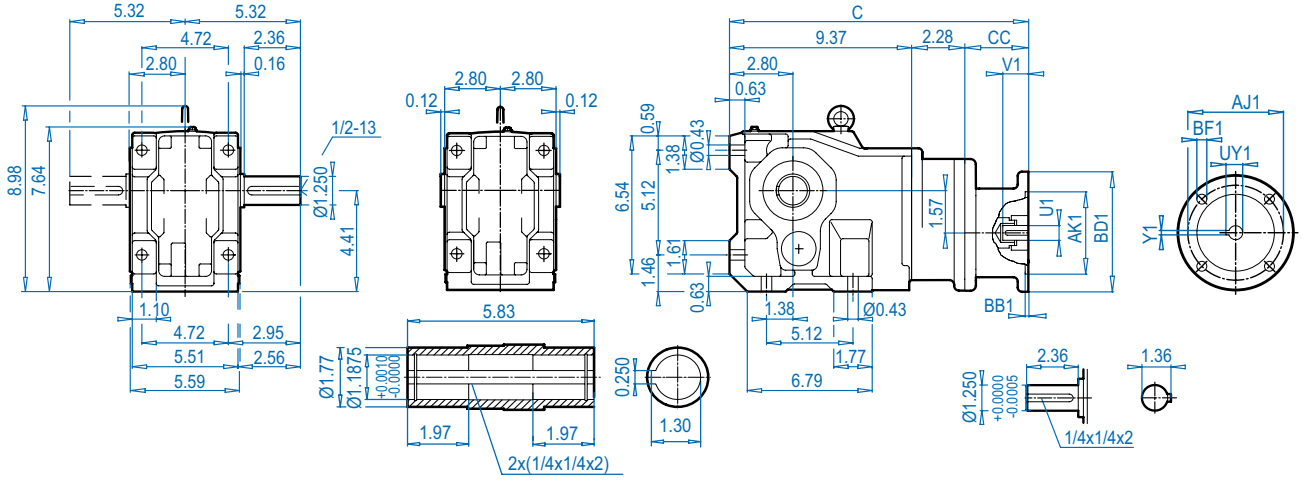

DIMENSIONS — Dimensions in Inches

SK 9013.1VF

SK 9013.1AF

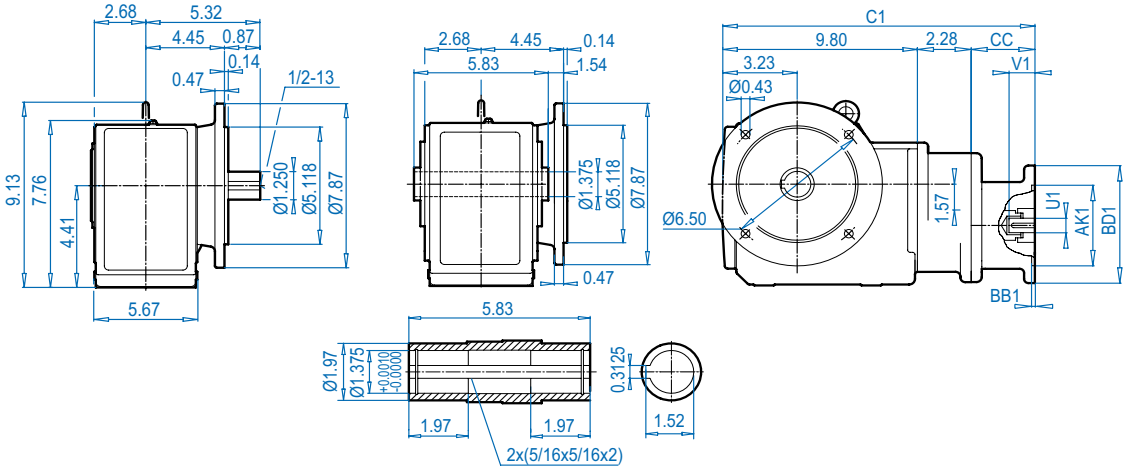

ALTERNATE SHAFTS SEE PAGES 566 - 573

SK 9013.1AXB ⇨🕮 574

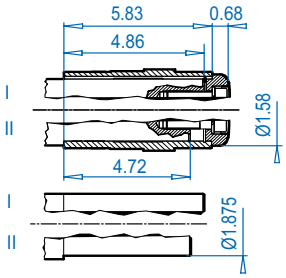

SK 9013.1AFB ⇨🕮 574

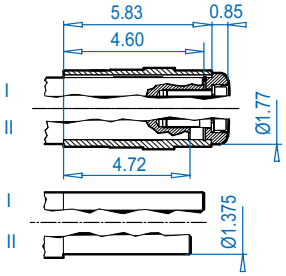

NEMA Dimensions

Type	AJ1	AK1	BB1	BD1	BF1	U1	V1	UY1	Y1	C	C1	CC
56C	5.88	4.500	0.18	6.54	0.43	0.625	2.06	0.71	0.188	16.15	16.58	4.50

Send Quote Requests to info@automatedpt.com
Call +1(800)985-6929 To Order or Order Online At Nordgearmotors.com

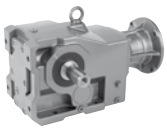


SK 9013.1 + NEMA

SK 9013.1AZ

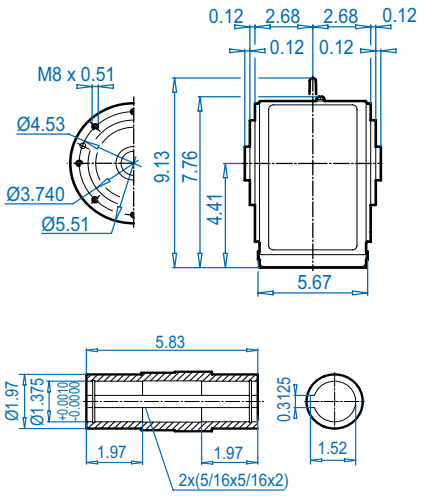

NEMA Input

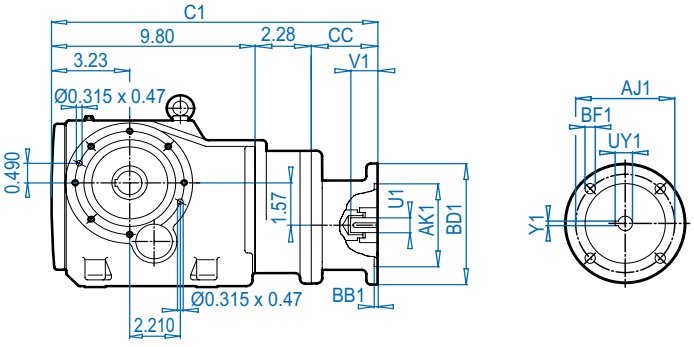

SK 9013.1AZ**K**

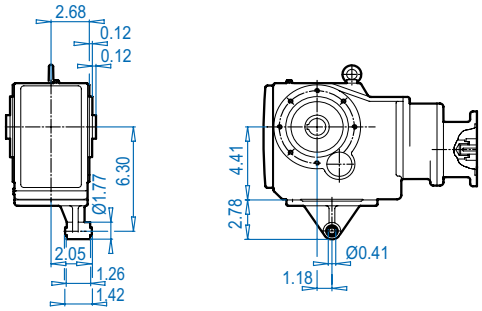

SK 9013.1AZ**D**

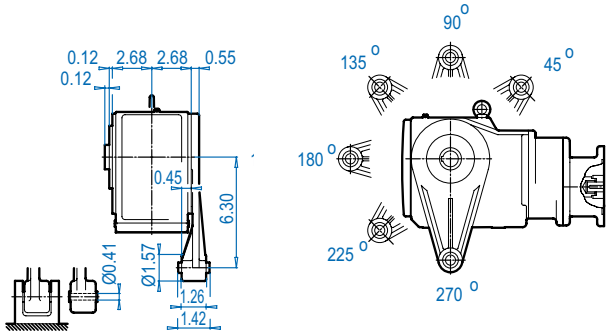

SK 9013.1AZ**B** ⇨🕮 574

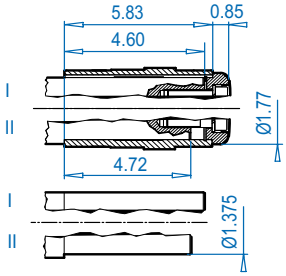

SK 9013.1AZ**S** ⇨🕮 571

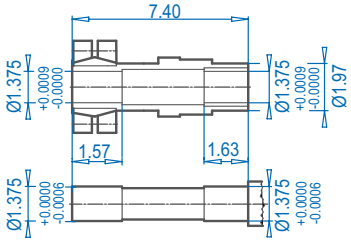

SK 9013.1AZ**SH**

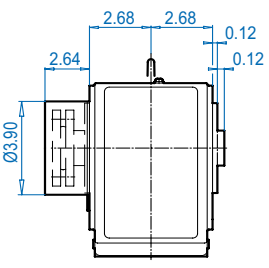

NEMA Dimensions

Type	AJ1	AK1	BB1	BD1	BF1	U1	V1	UY1	Y1	C1	CC
56C	5.88	4.500	0.18	6.54	0.43	0.625	2.06	0.71	0.188	16.58	4.50

Send Quote Requests to info@automatedpt.com
Call +1(800)985-6929 To Order or Order Online At Nordgearmotors.com

SK 9016.1 + Motor




DRIVESYSTEMS

DIMENSIONS
Dimensions in Inches

SK 9016.1

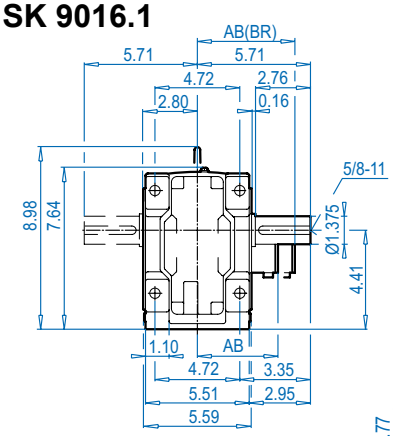

SK 9016.1AX

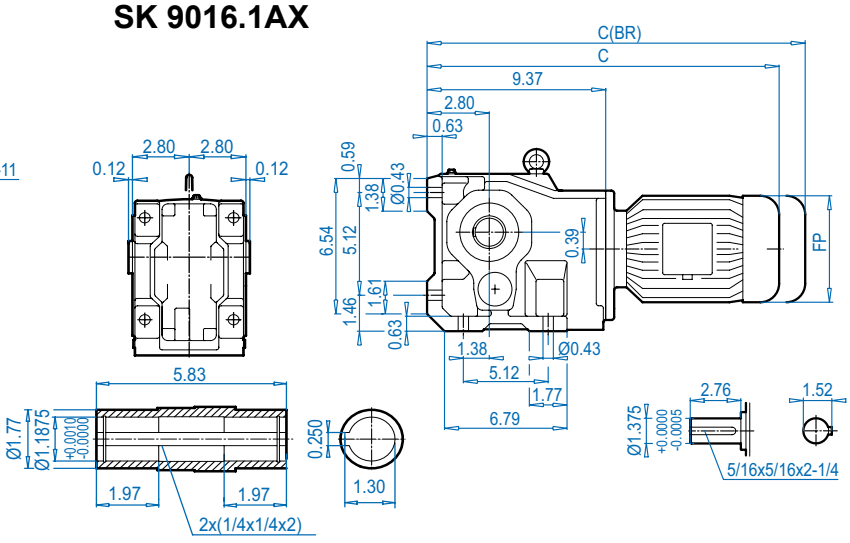

SK 9016.1VF

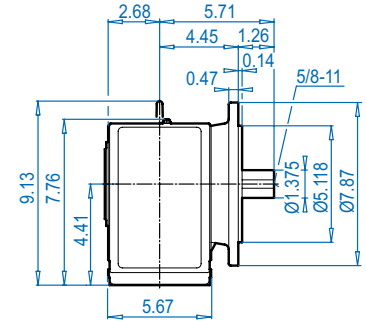

SK 9016.1AF

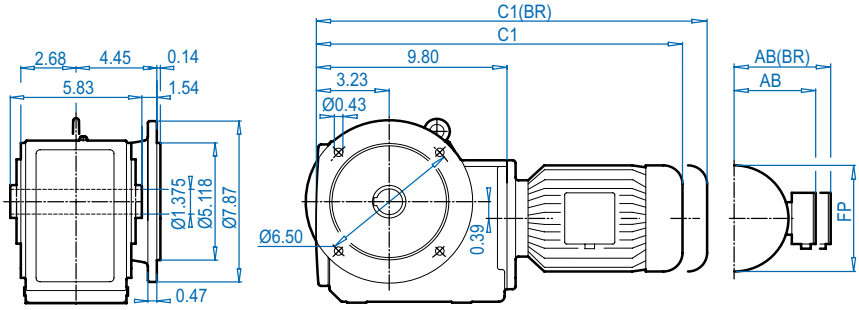

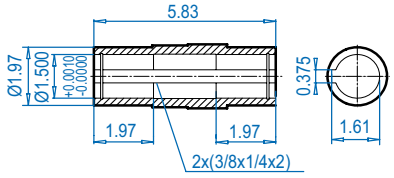

SK 9016.1AXB ⇨🕮 574

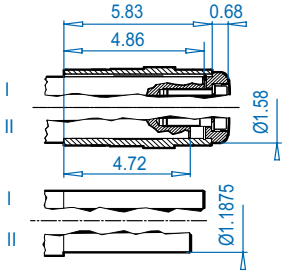

SK 9016.1AFB ⇨🕮 574

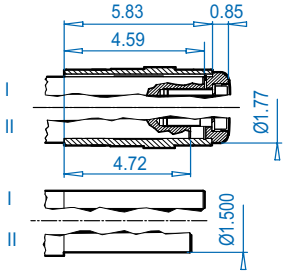

Motor dimensions

Standard efficiency	63S/L	71S/L	80S/L	90S/L	100L		For Other Connection Possibilities please see ⇨🕮 555 & 557
Energy efficiency			80LH	90SH/LH	100LH	112MH	
AB	4.53	4.88	5.59	5.79	6.65	7.05	
AB (BR)	4.84	5.24	5.63	5.83	6.26	6.69	
C1	17.52	19.09	20.08	21.69	22.87	23.78	
C1 (BR)	19.72	21.38	22.60	24.65	26.46	27.44	
C	17.09	18.66	19.65	21.26	22.44	23.35	
C (BR)	19.29	20.94	22.17	24.21	26.02	27.01	
FP	5.12	5.71	6.50	7.20	7.91	8.98	

(BR) denotes Brakemotor

ALTERNATE SHAFTS SEE PAGES 566 - 573

Send Quote Requests to info@automatedpt.com
Call +1(800)985-6929 To Order or Order Online At Nordgearmotors.com




SK 9016.1 + Motor

SK 9016.1AZ

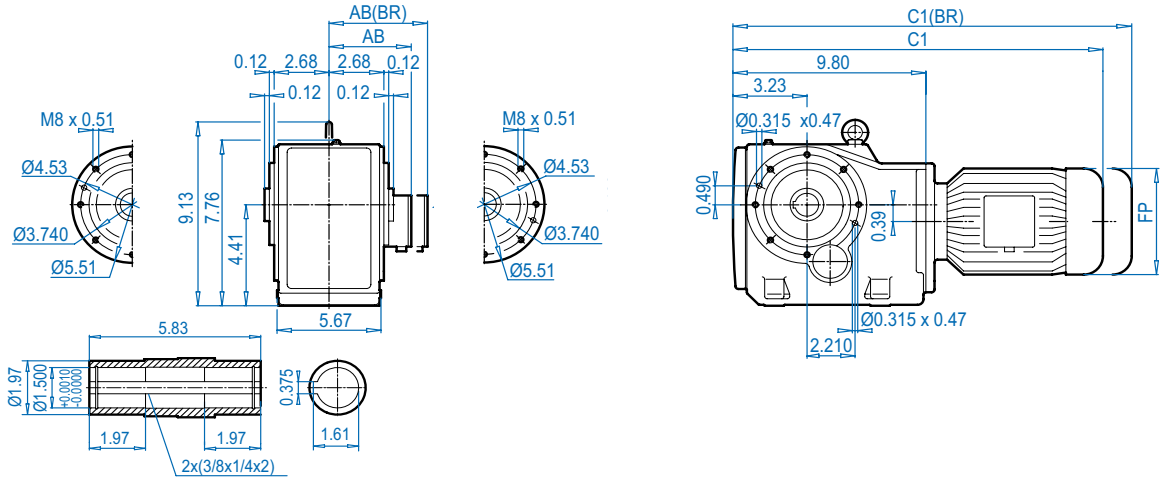

SK 9016.1AZ**K**

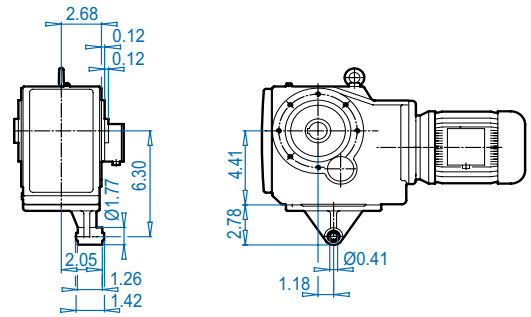

SK 9016.1AZ**D**

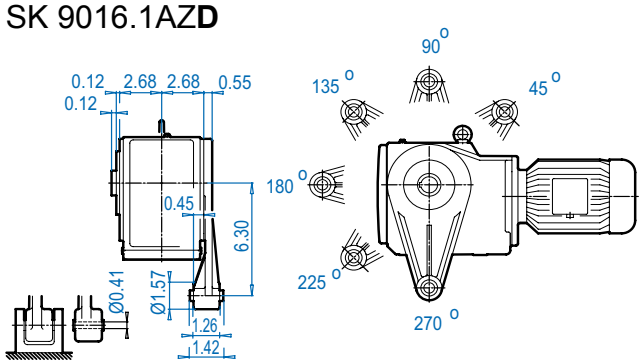

SK 9016.1AZ**B** ⇨🕮 574

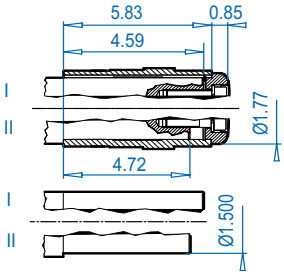

SK 9016.1AZ**S** ⇨🕮 571

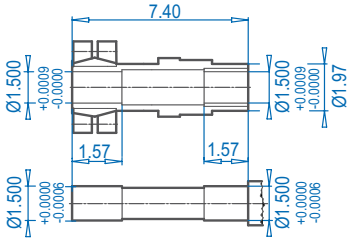

SK 9016.1AZ**SH**

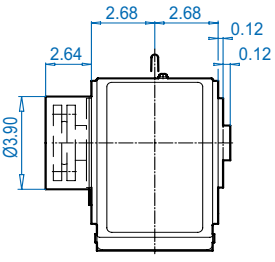

Motor dimensions

Standard efficiency	63S/L	71S/L	80S/L	90S/L	100L		For Other Connection Possibilities please see ⇨🕮 555 & 557
Energy efficiency			80LH	90SH/LH	100LH	112MH	
AB	4.53	4.88	5.59	5.79	6.65	7.05	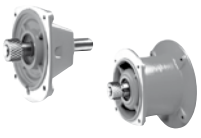
AB (BR)	4.84	5.24	5.63	5.83	6.26	6.69	
C1	17.52	19.09	20.08	21.69	22.87	23.78	
C1 (BR)	19.72	21.38	22.60	24.65	26.46	27.44	
FP	5.12	5.71	6.50	7.20	7.91	8.98	

(BR) denotes Brakemotor

Send Quote Requests to info@automatedpt.com
Call +1(800)985-6929 To Order or Order Online At Nordgearmotors.com

SK 9016.1 + NEMA





DRIVESYSTEMS

SK 9016.1

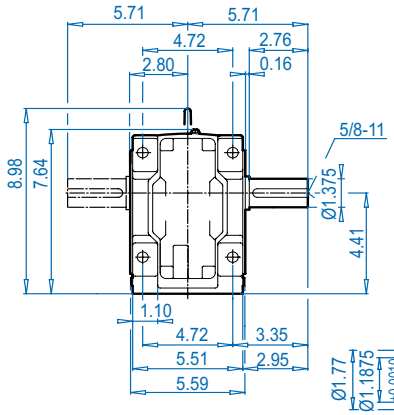

SK 9016.1AX

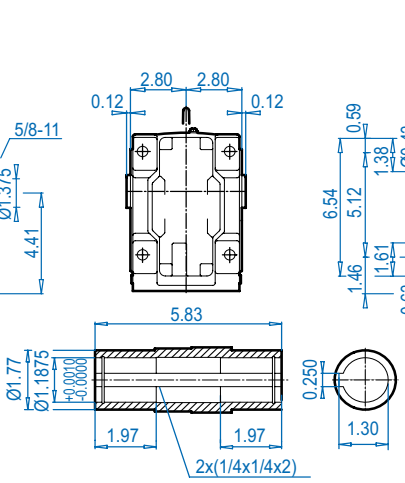

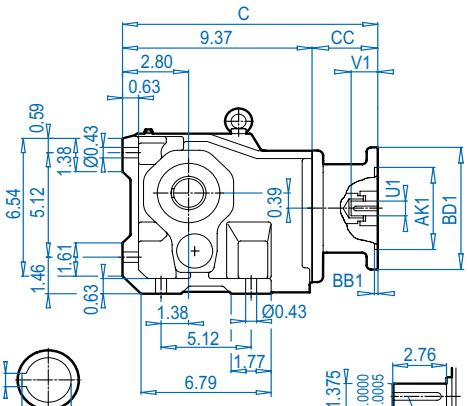

NEMA Input

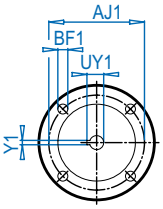

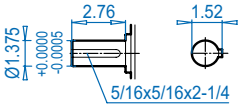

SK 9016.1VF

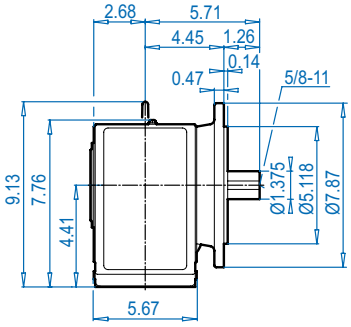

SK 9016.1AF

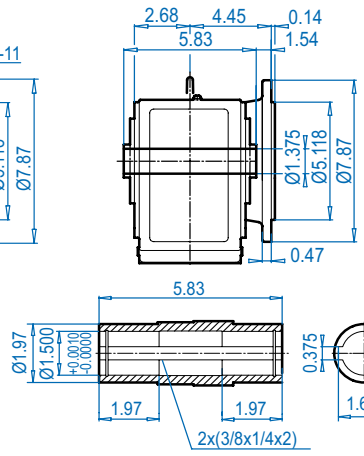

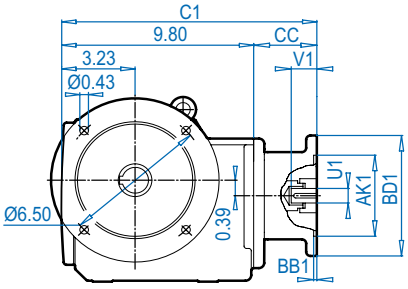

SK 9016.1AX**B** ⇨🕮 574

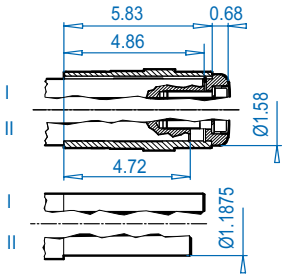

SK 9016.1AF**B** ⇨🕮 574

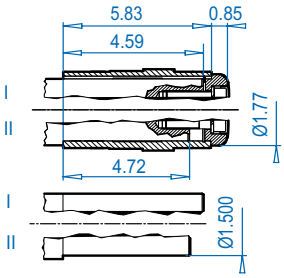

ALTERNATE SHAFTS SEE PAGES 566 - 573

NEMA Dimensions

Type	AJ1	AK1	BB1	BD1	BF1	U1	V1	UY1	Y1	C	C1	CC
56C	5.88	4.500	0.18	6.54	0.43	0.625	2.06	0.71	0.188	13.87	14.30	4.50
140TC	5.88	4.500	0.18	6.54	0.43	0.875	2.12	0.96	0.188	13.87	14.40	4.50
180TC	7.25	8.500	0.23	9.17	0.59	1.125	2.62	1.24	0.250	15.02	15.45	5.65

Send Quote Requests to info@automatedpt.com
Call +1(800)985-6929 To Order or Order Online At Nordgearmotors.com

DRIVESYSTEMS





SK 9016.1 + NEMA

SK 9016.1AZ

NEMA Input

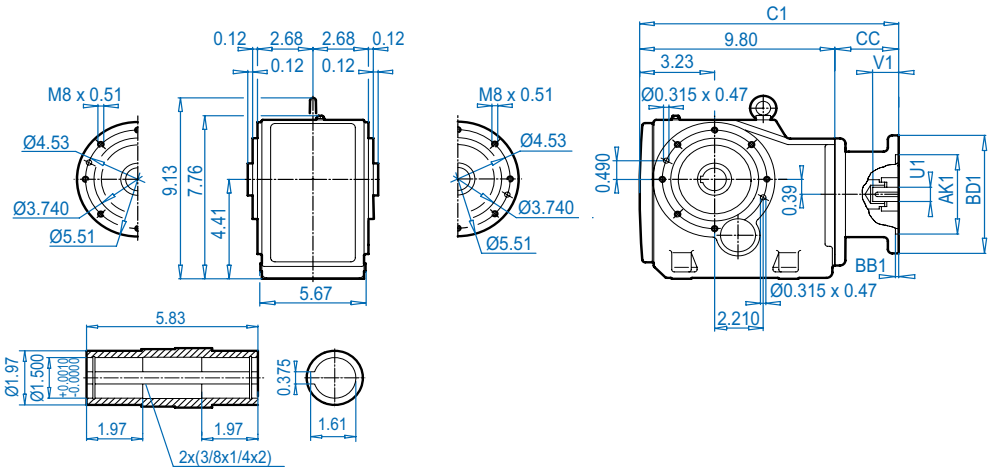

Dimensions in Inches
DIMENSIONS

SK 9016.1AZ**K**

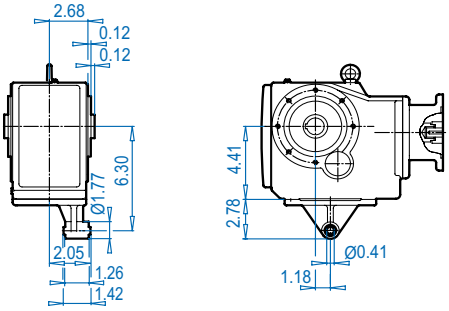

SK 9016.1AZ**D**

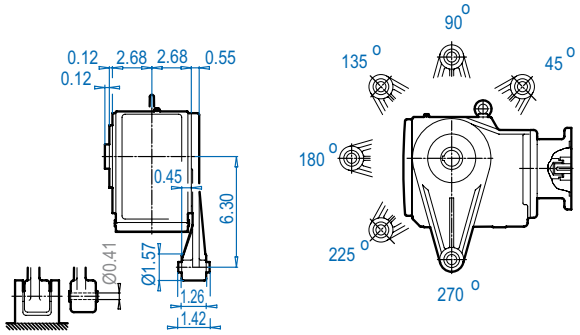

SK 9016.1AZ**B** ⇨🕮 574

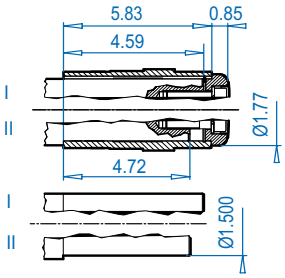

SK 9016.1AZ**S** ⇨🕮 571

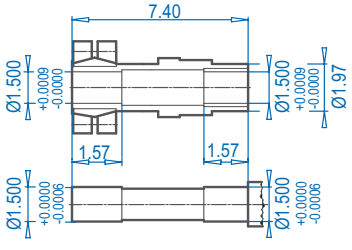

SK 9016.1AZ**SH**

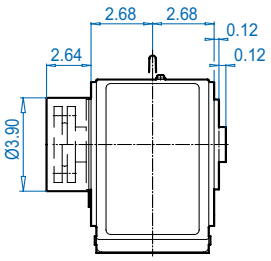

NEMA Dimensions

Type	AJ1	AK1	BB1	BD1	BF1	U1	V1	UY1	Y1	C1	CC
56C	5.88	4.500	0.18	6.54	0.43	0.625	2.06	0.71	0.188	14.30	4.50
140TC	5.88	4.500	0.18	6.54	0.43	0.875	2.12	0.96	0.188	14.30	4.50
180TC	7.25	8.500	0.23	9.17	0.59	1.125	2.62	1.24	0.250	15.45	5.65

ALTERNATE SHAFTS SEE PAGES 566 - 573

Send Quote Requests to info@automatedpt.com
Call +1(800)985-6929 To Order or Order Online At Nordgearmotors.com

SK 9017.1 + Motor




DRIVESYSTEMS

SK 9017.1

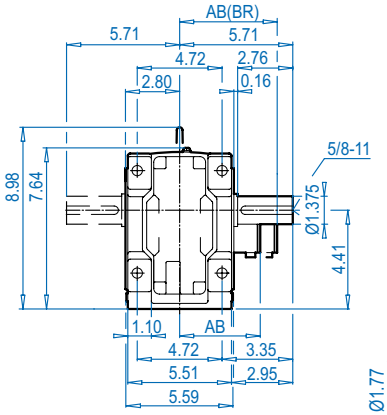

SK 9017.1AX

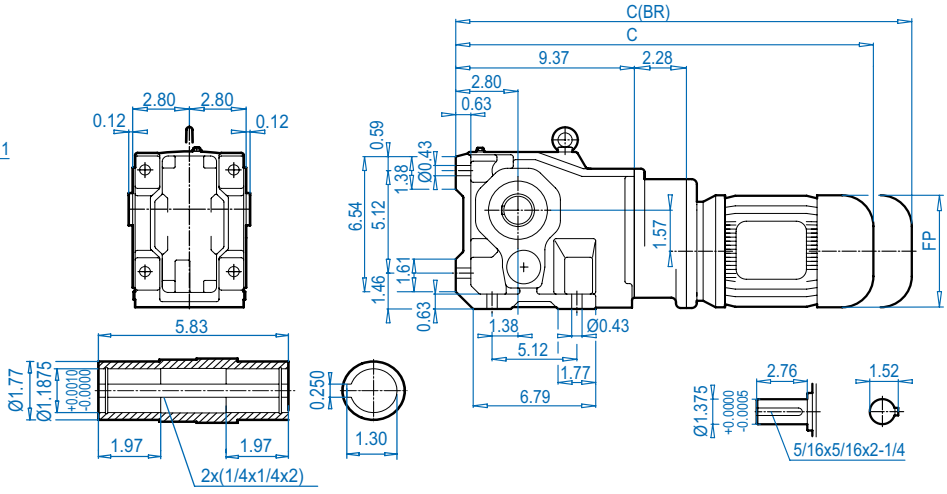

SK 9017.1VF

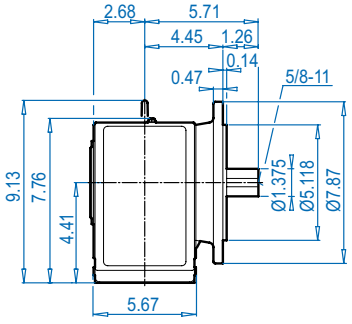

SK 9017.1AF

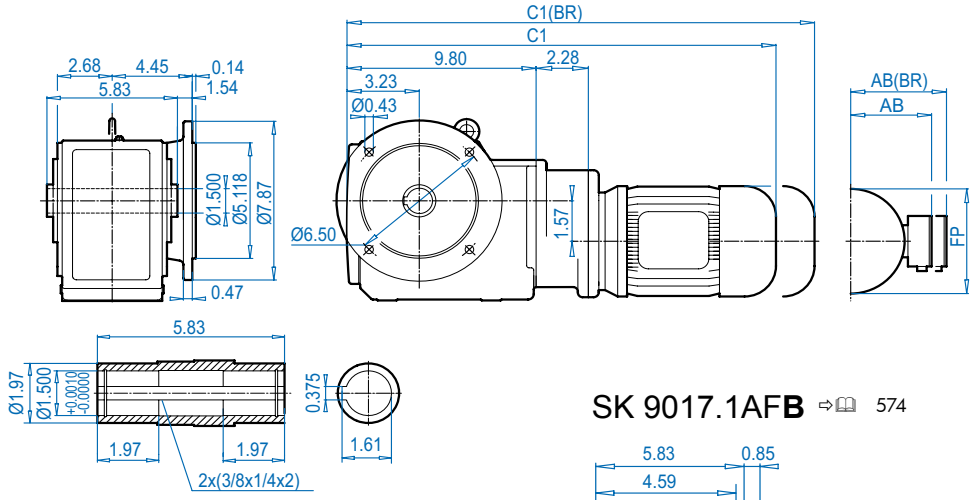

SK 9017.1AXB ⇨🕮 574

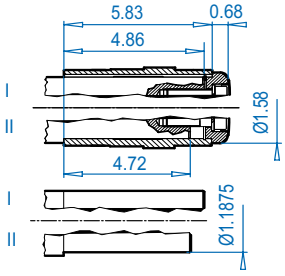

SK 9017.1AFB ⇨🕮 574

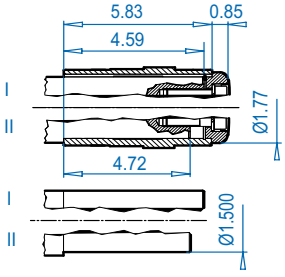

Motor dimensions

Standard efficiency	63S/L	71S/L			For Other Connection Possibilities please see ⇨🕮 555 & 557
Energy efficiency					
AB	4.53	4.88			
AB (BR)	4.84	5.24			
C1	19.80	21.37			
C1 (BR)	22.01	23.65			
C	19.37	20.94			
C (BR)	21.57	23.23			
FP	5.12	5.71			

(BR) denotes Brakemotor

Send Quote Requests to info@automatedpt.com
Call +1(800)985-6929 To Order or Order Online At Nordgearmotors.com

DRIVESYSTEMS

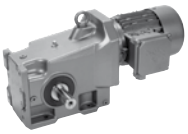



SK 9017.1 + Motor

SK 9017.1AZ

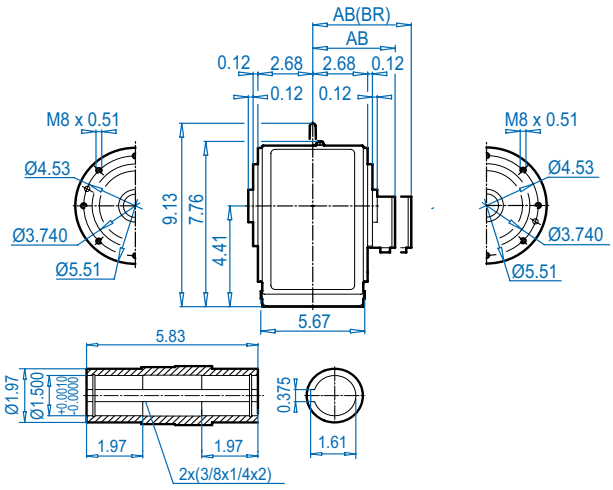

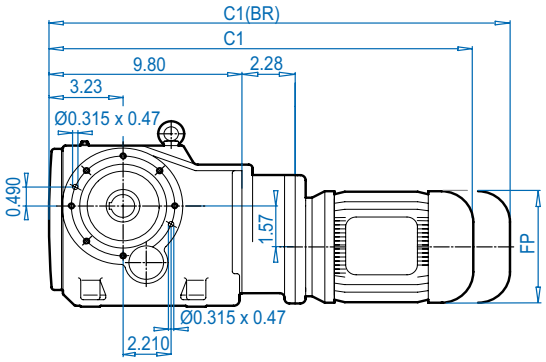

SK 9017.1AZ**K**

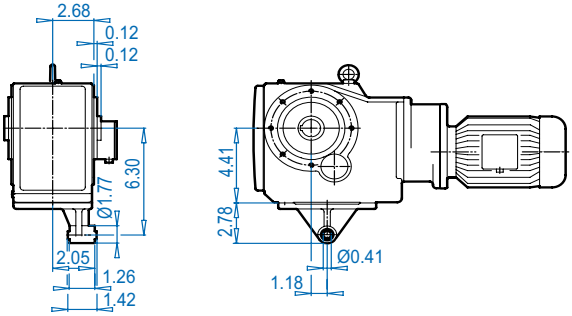

SK 9017.1AZ**D**

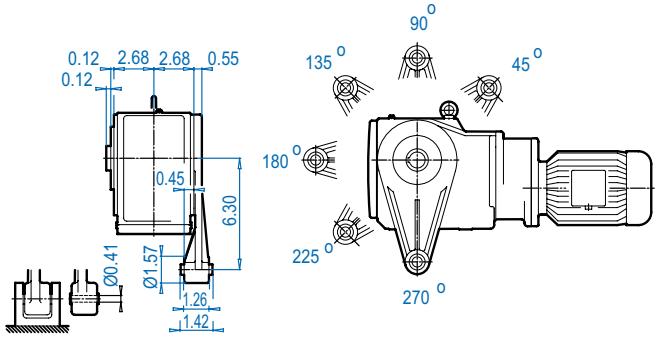

SK 9017.1AZ**B** ⇨🕮 574

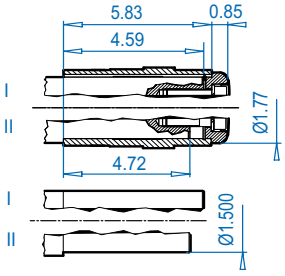

SK 9017.1AZ**S** ⇨🕮 571

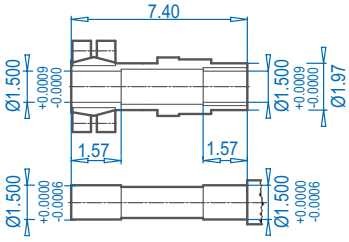

SK 9017.1AZ**SH**

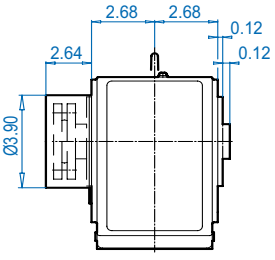

Motor dimensions

Standard efficiency	63S/L	71S/L			For Other Connection Possibilities please see ⇨🕮 555 & 557
Energy efficiency					
AB	4.53	4.88			
AB (BR)	4.84	5.24			
C1	19.80	21.37			
C1 (BR)	22.01	23.65			
FP	5.12	5.71			

(BR) denotes Brakemotor

Send Quote Requests to info@automatedpt.com
Call +1(800)985-6929 To Order or Order Online At Nordgearmotors.com

SK 9017.1 + NEMA





DRIVESYSTEMS

SK 9017.1

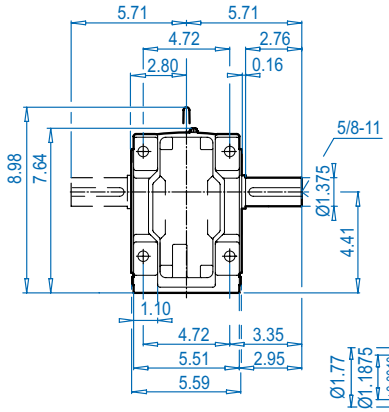

SK 9017.1AX

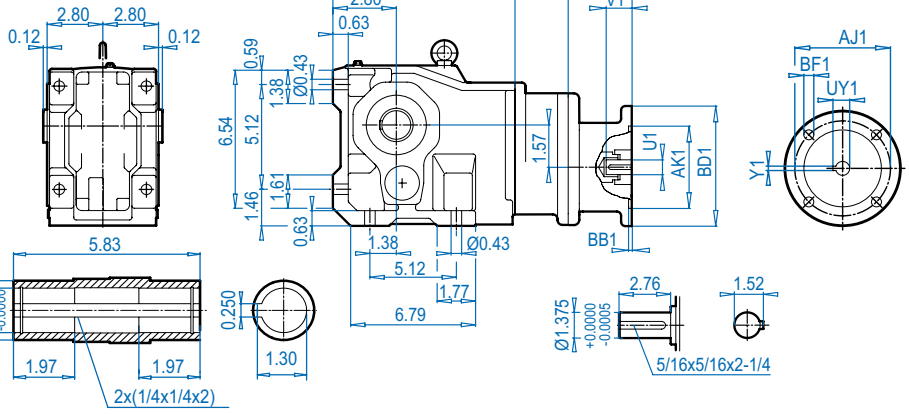

NEMA Input

SK 9017.1VF

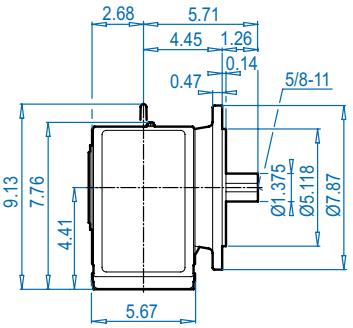

SK 9017.1AF

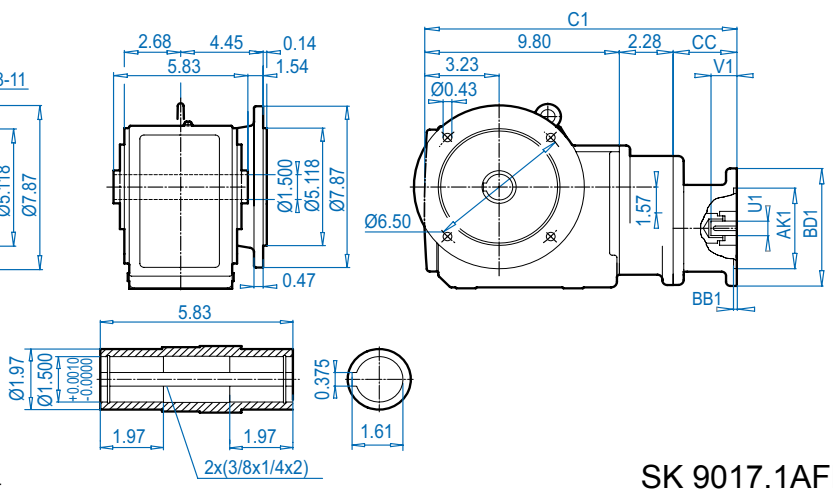

SK 9017.1AXB ⇨🕮 574

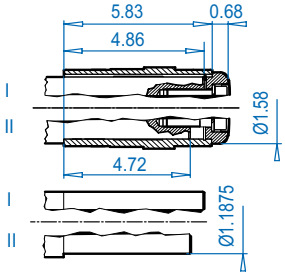

SK 9017.1AFB ⇨🕮 574

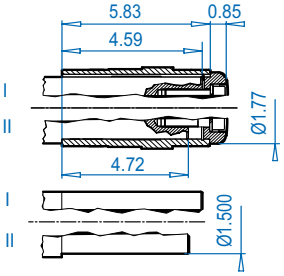

NEMA Dimensions

Type	AJ1	AK1	BB1	BD1	BF1	U1	V1	UY1	Y1	C	C1	CC
56C	5.88	4.500	0.18	6.54	0.43	0.625	2.06	0.71	0.188	16.15	16.58	4.50

Send Quote Requests to info@automatedpt.com
Call +1(800)985-6929 To Order or Order Online At Nordgearmotors.com

DRIVESYSTEMS

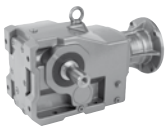



SK 9017.1 + NEMA

SK 9017.1AZ

NEMA Input

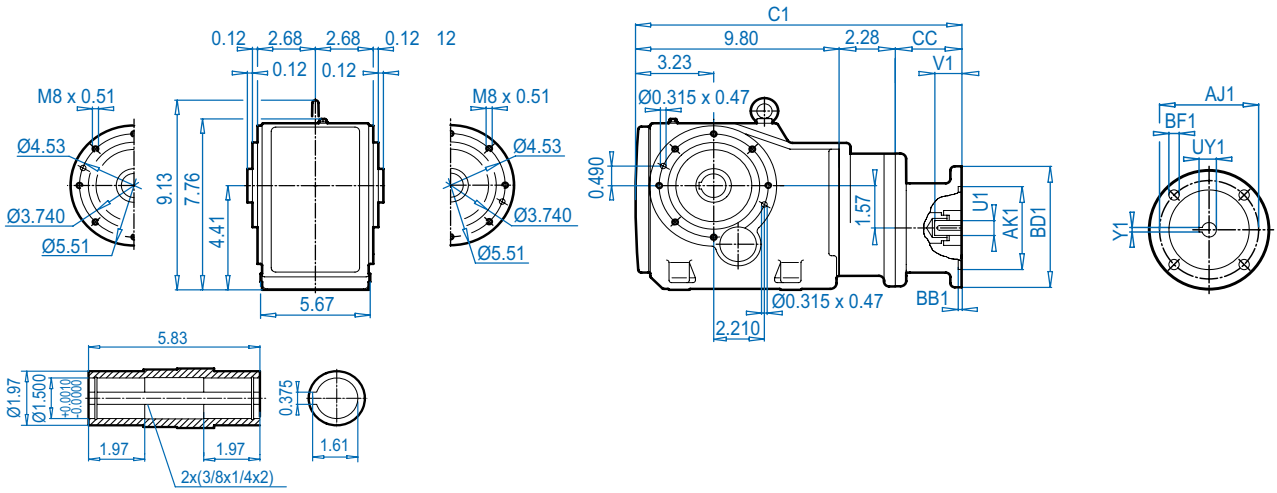

Dimensions in inches
DIMENSIONS

SK 9017.1AZ**K**

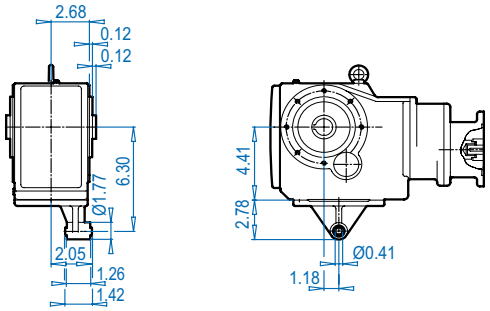

SK 9017.1AZ**D**

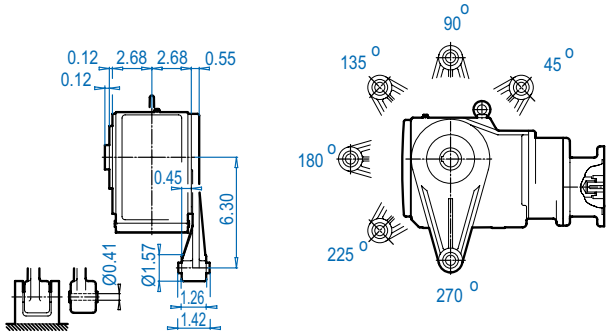

SK 9017.1AZ**B** ⇨🕮 574

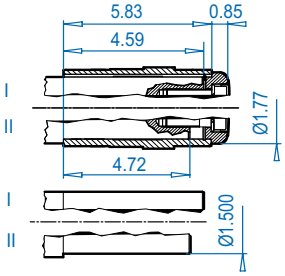

SK 9017.1AZ**S** ⇨🕮 571

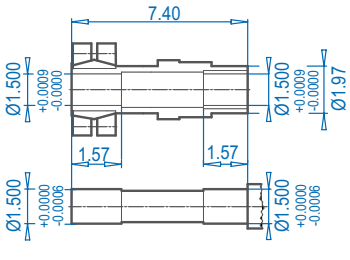

SK 9017.1AZ**SH**

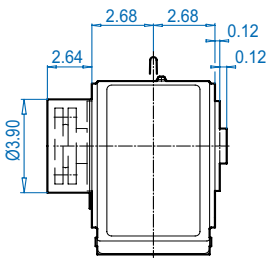

NEMA Dimensions

Type	AJ1	AK1	BB1	BD1	BF1	U1	V1	UY1	Y1	C1	CC
56C	5.88	4.500	0.18	6.54	0.43	0.625	2.06	0.71	0.188	16.58	4.50

Send Quote Requests to info@automatedpt.com
Call +1(800)985-6929 To Order or Order Online At Nordgearmotors.com

SK 9022.1 + Motor




DRIVESYSTEMS

DIMENSIONS
Dimensions in Inches
ALTERNATE SHAFTS SEE PAGES 566 - 573

SK 9022.1

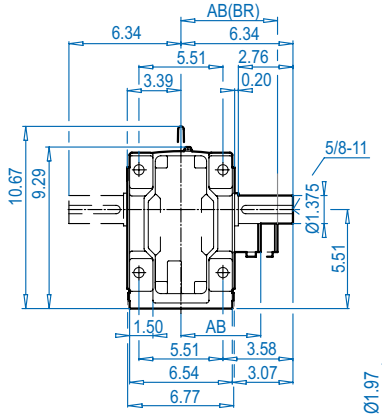

SK 9022.1AX

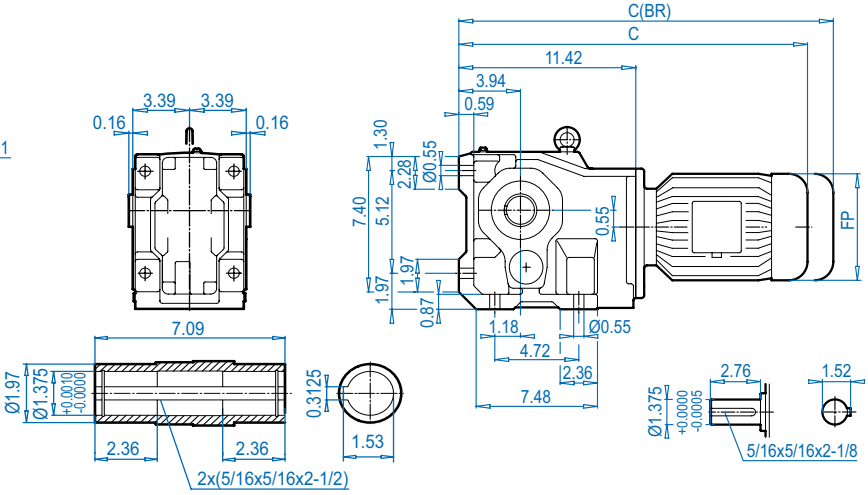

SK 9022.1VF

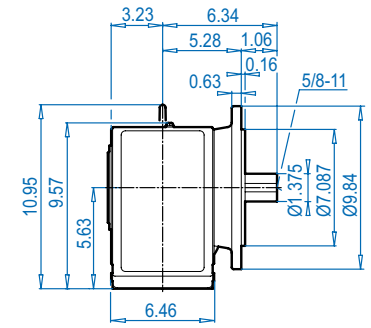

SK 9022.1AF

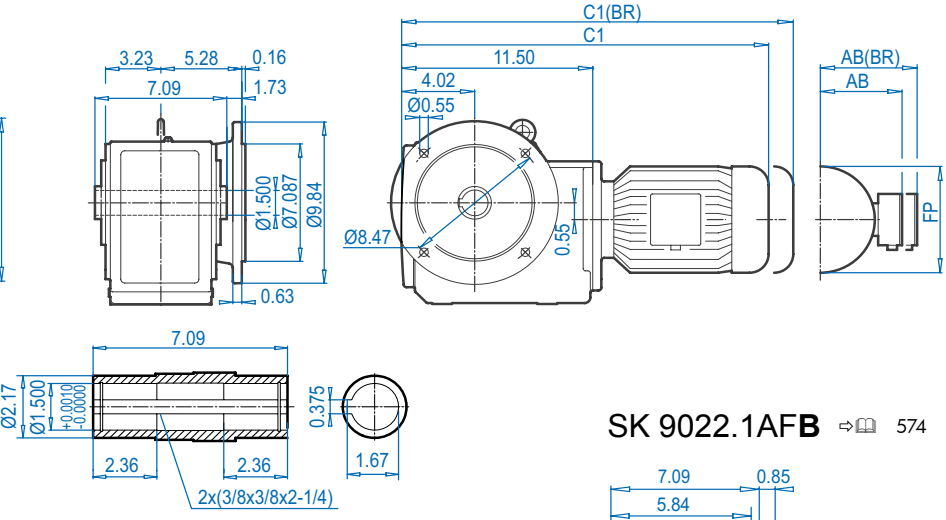

SK 9022.1AX**B** ⇨🕮 574

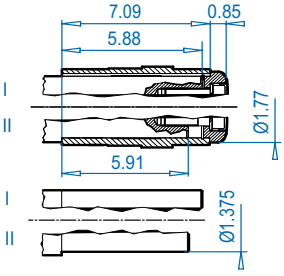

SK 9022.1AF**B** ⇨🕮 574

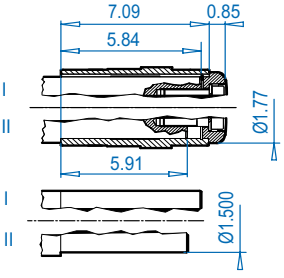

Motor dimensions

Standard efficiency	63S/L	71S/L	80S/L	90S/L	100L		For Other Connection Possibilities please see ⇨🕮 555 & 557
Energy efficiency			80LH	90SH/LH	100LH	112MH	
AB	4.53	4.88	5.59	5.79	6.65	7.05	
AB (BR)	4.84	5.24	5.63	5.83	6.26	6.69	
C1	19.21	20.79	21.77	23.39	24.57	25.47	
C1 (BR)	21.42	23.07	24.29	26.34	28.15	29.13	
C	19.13	20.71	21.69	23.31	24.49	25.39	
C (BR)	21.34	22.99	24.21	26.26	28.07	29.06	
FP	5.12	5.71	6.50	7.20	7.91	8.98	

(BR) denotes Brakemotor

Send Quote Requests to info@automatedpt.com
Call +1(800)985-6929 To Order or Order Online At Nordgearmotors.com

DRIVESYSTEMS



SK 9022.1 + Motor

SK 9022.1AZ

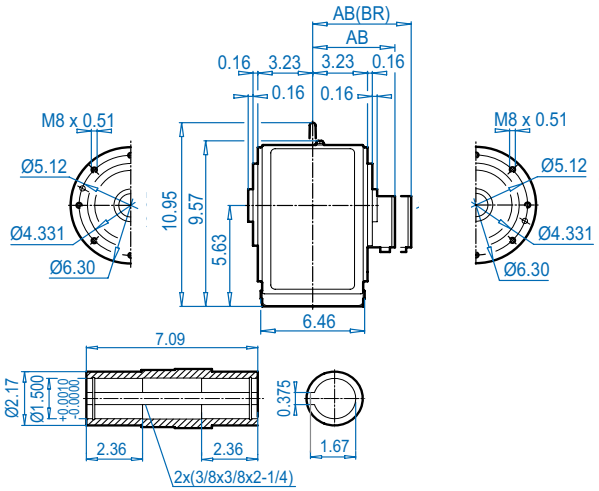

SK 9022.1AZ**K**

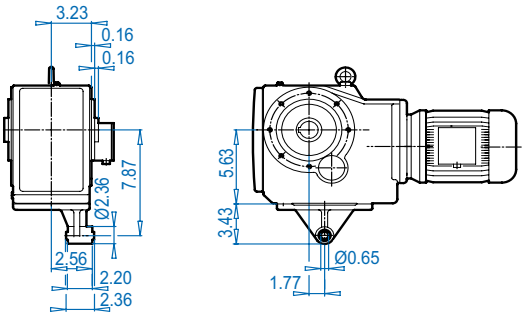

SK 9022.1AZ**D**

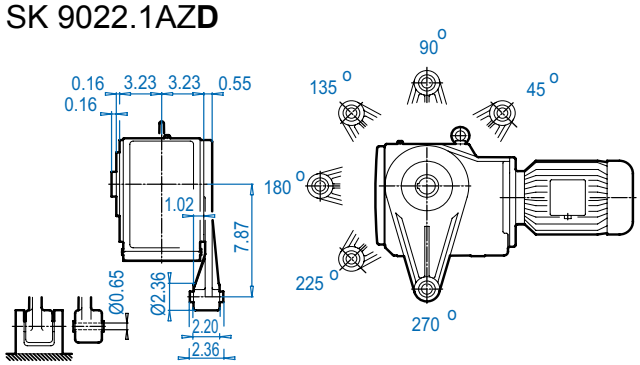

SK 9022.1AZ**B** ⇨🕮 574

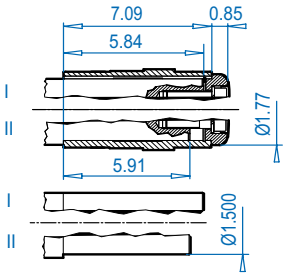

SK 9022.1AZ**S** ⇨🕮 571

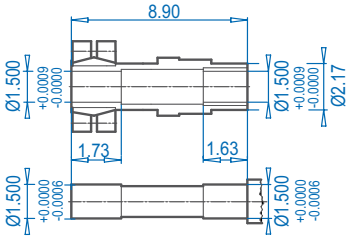

SK 9022.1AZ**SH**

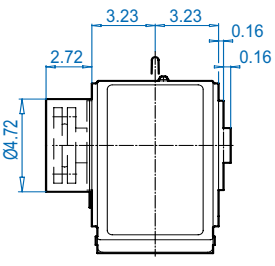

Motor dimensions

Standard efficiency	63S/L	71S/L	80S/L	90S/L	100L		For Other Connection Possibilities please see ⇨🕮 555 & 557
Energy efficiency			80LH	90SH/LH	100LH	112MH	
AB	4.53	4.88	5.59	5.79	6.65	7.05	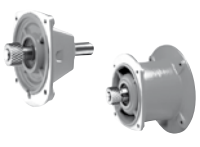
AB (BR)	4.84	5.24	5.63	5.83	6.26	6.69	
C1	19.21	20.79	21.77	23.39	24.57	25.47	
C1 (BR)	21.42	23.07	24.29	26.34	28.15	29.13	
FP	5.12	5.71	6.50	7.20	7.91	8.98	

(BR) denotes Brakemotor

Dimensions in Inches DIMENSIONS
ALTERNATE SHAFTS SEE PAGES 566 - 573

Send Quote Requests to info@automatedpt.com
Call +1(800)985-6929 To Order or Order Online At Nordgearmotors.com

SK 9022.1 + NEMA




SK 9022.1

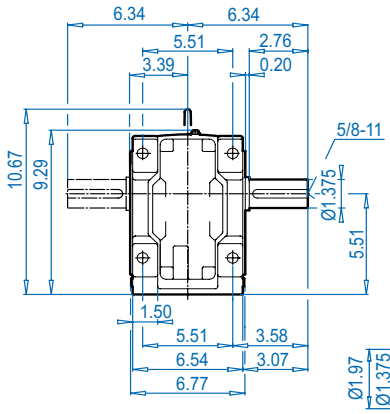

SK 9022.1AX

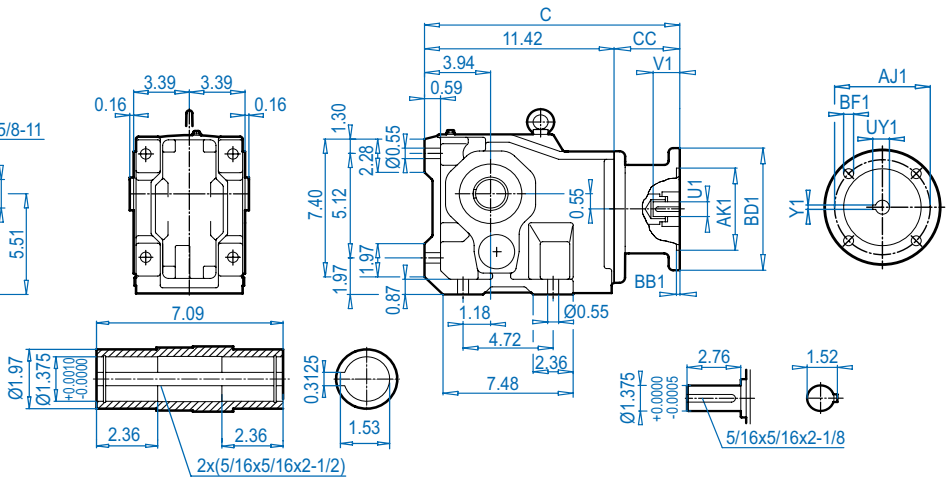

SK 9022.1VF

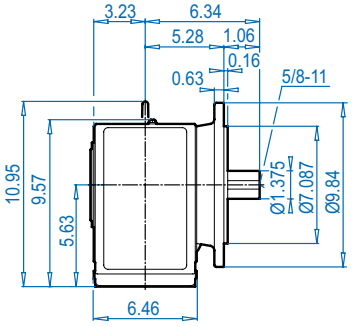

SK 9022.1AF

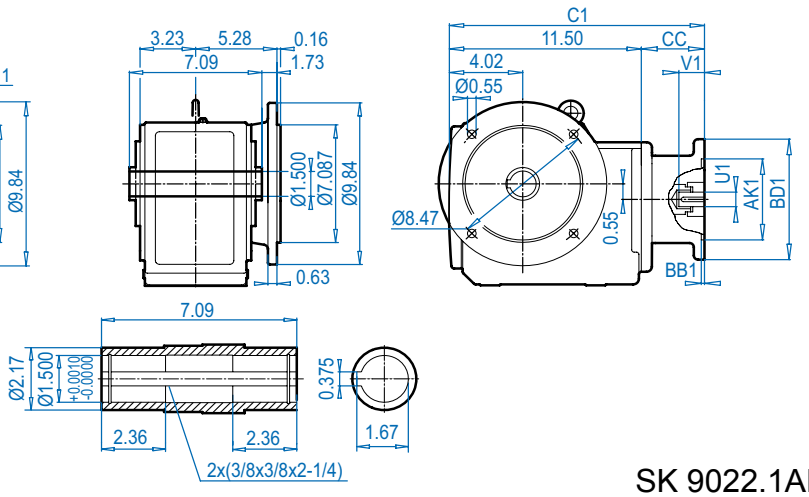

SK 9022.1AX**B** ⇨🕮 574

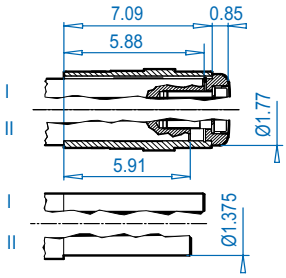

SK 9022.1AF**B** ⇨🕮 574

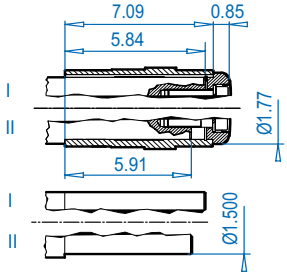

NEMA Dimensions

Type	AJ1	AK1	BB1	BD1	BF1	U1	V1	UY1	Y1	C	C1	CC
56C	5.88	4.500	0.18	6.54	0.43	0.625	2.06	0.71	0.188	15.92	16.00	4.50
140TC	5.88	4.500	0.18	6.54	0.43	0.875	2.12	0.96	0.188	15.92	16.00	4.50
180TC	7.25	8.500	0.23	9.17	0.59	1.125	2.62	1.24	0.250	17.02	17.15	5.65

Send Quote Requests to info@automatedpt.com
Call +1(800)985-6929 To Order or Order Online At Nordgearmotors.com

DRIVESYSTEMS

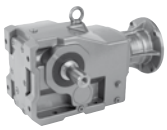



SK 9022.1 + NEMA

SK 9022.1AZ

NEMA Input

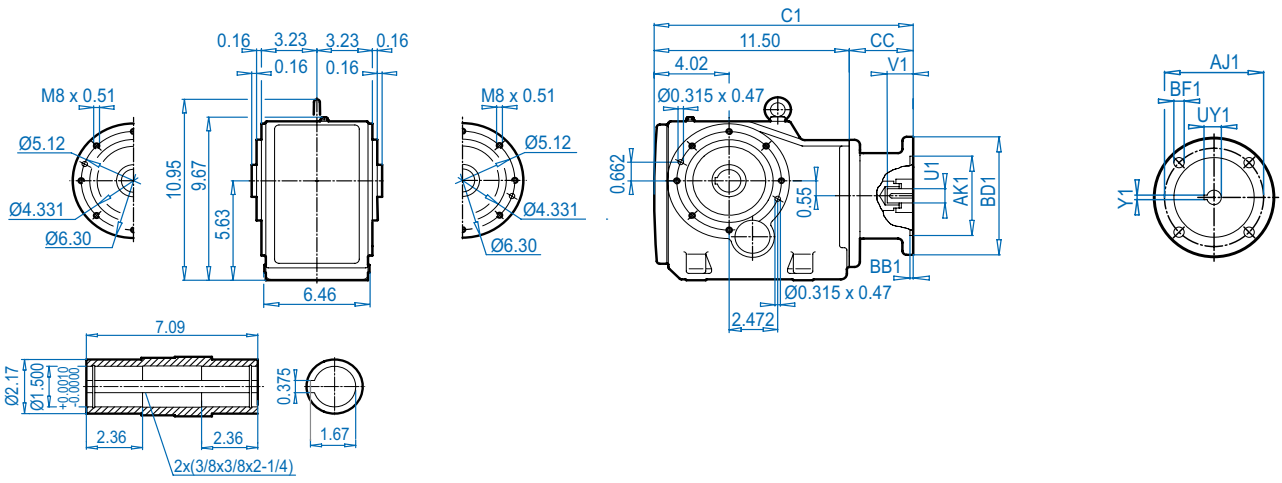

Dimensions in Inches
DIMENSIONS

SK 9022.1AZ**K**

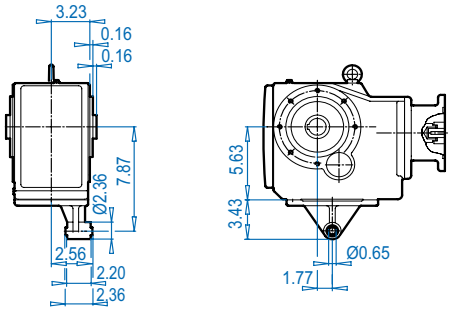

SK 9022.1AZ**D**

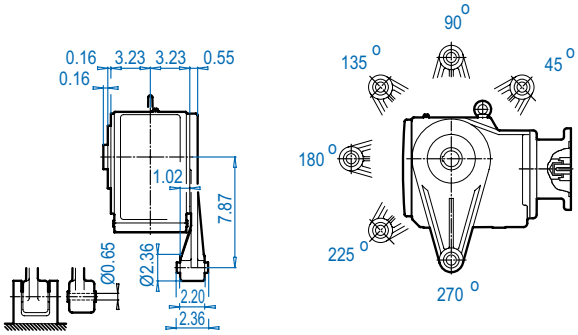

SK 9022.1AZ**B** ⇨🕮 574

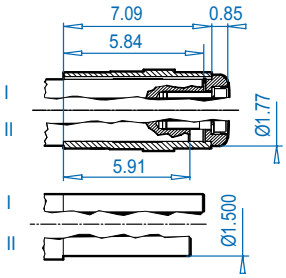

SK 9022.1AZ**S** ⇨🕮 571

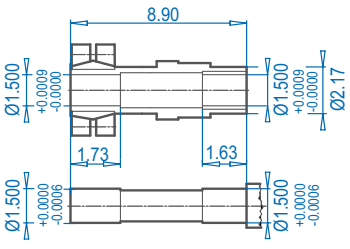

SK 9022.1AZ**SH**

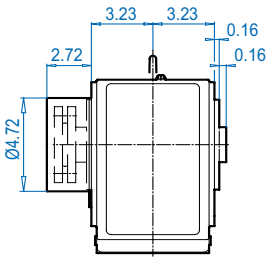

NEMA Dimensions

Type	AJ1	AK1	BB1	BD1	BF1	U1	V1	UY1	Y1	C1	CC
56C	5.88	4.500	0.18	6.54	0.43	0.625	2.06	0.71	0.188	16.00	4.50
140TC	5.88	4.500	0.18	6.54	0.43	0.875	2.12	0.96	0.188	16.00	4.50
180TC	7.25	8.500	0.23	9.17	0.59	1.125	2.62	1.24	0.250	17.15	5.65

ALTERNATE SHAFTS SEE PAGES 566 - 573

Send Quote Requests to info@automatedpt.com
Call +1(800)985-6929 To Order or Order Online At Nordgearmotors.com

SK 9023.1 + Motor




DRIVESYSTEMS

SK 9023.1

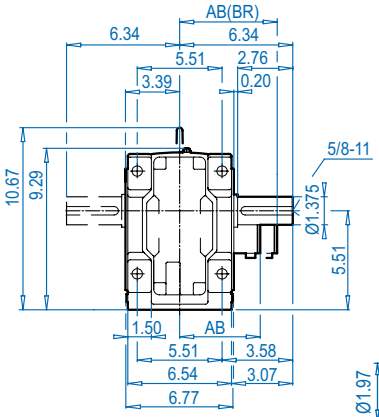

SK 9023.1AX

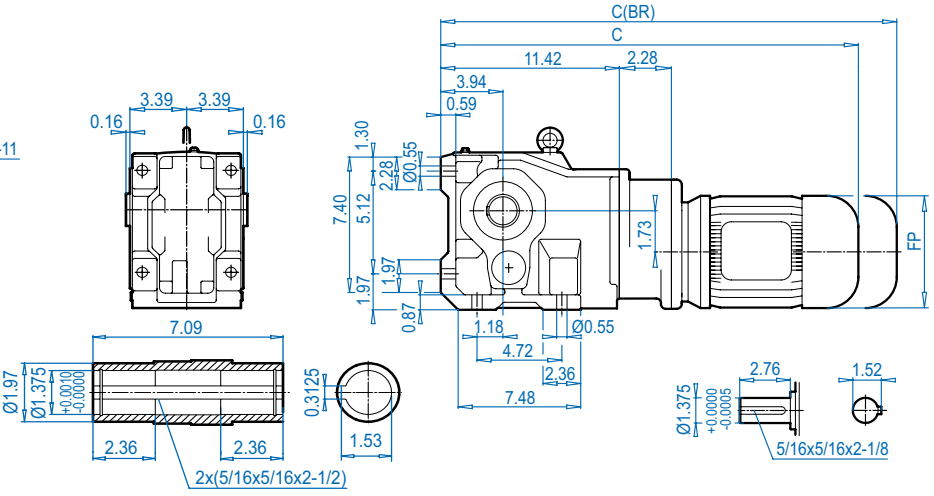

SK 9023.1VF

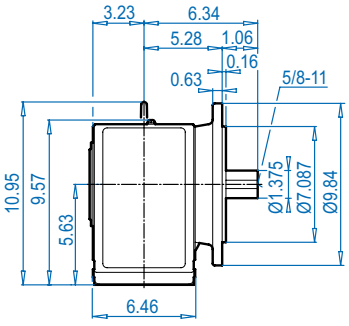

SK 9023.1AF

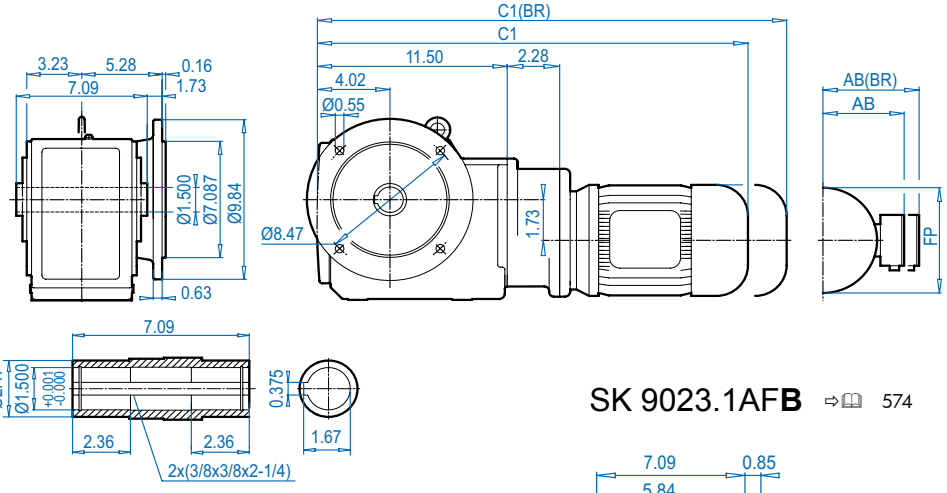

SK 9023.1AX**B** ⇨🕮 574

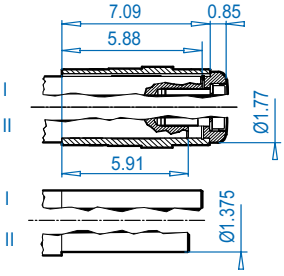

SK 9023.1AF**B** ⇨🕮 574

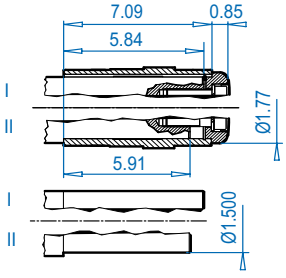

Motor dimensions

Standard efficiency	63S/L	71S/L			For Other Connection Possibilities please see ⇨🕮 555 & 557
Energy efficiency					
AB	4.53	4.88			
AB (BR)	4.84	5.24			
C1	21.50	23.07			
C1 (BR)	23.70	25.35			
C	21.42	22.99			
C (BR)	23.62	25.28			
FP	5.12	5.71			



(BR) denotes Brakemotor

Send Quote Requests to info@automatedpt.com
Call +1(800)985-6929 To Order or Order Online At Nordgearmotors.com

DRIVESYSTEMS



SK 9023.1 + Motor

SK 9023.1AZ

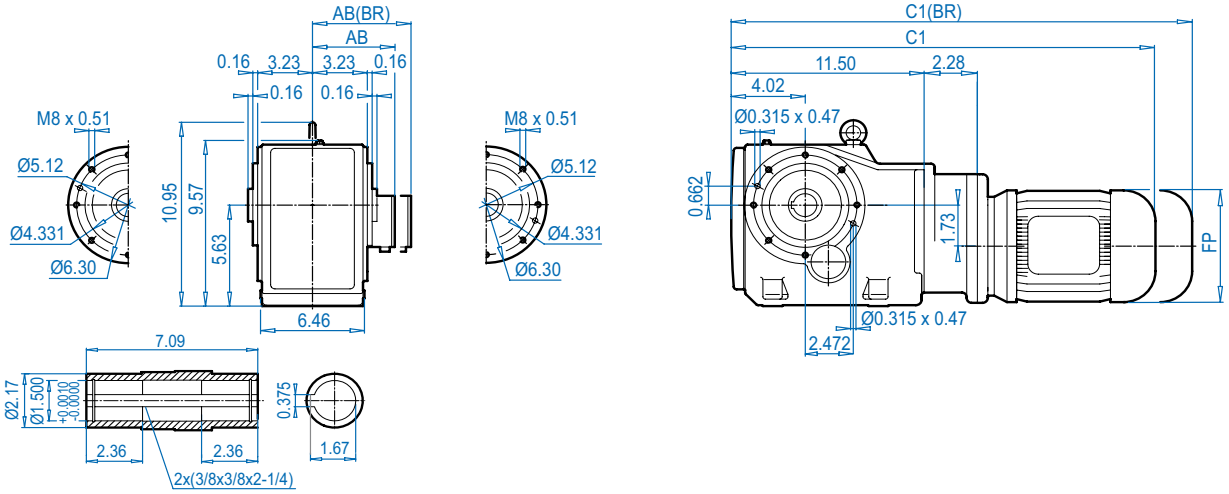

SK 9023.1AZ**K**

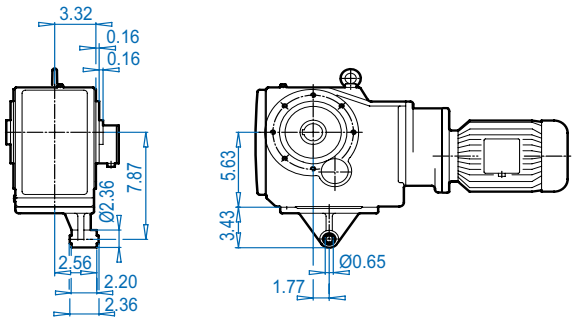

SK 9023.1AZ**D**

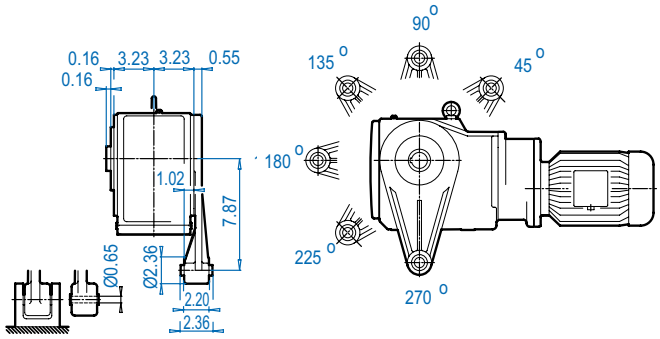

SK 9023.1AZ**B** ⇨🕮 574

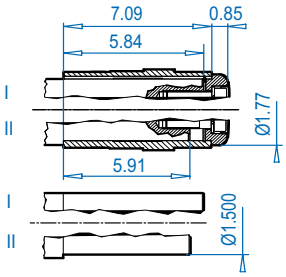

SK 9023.1AZ**S** ⇨🕮 571

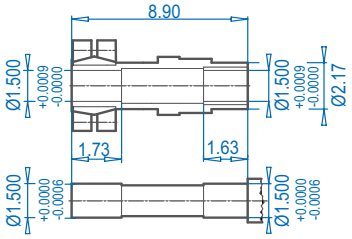

SK 9023.1AZ**SH**

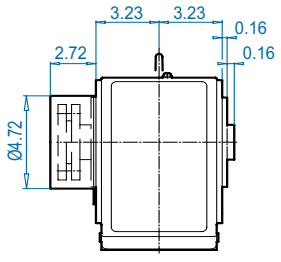

Motor dimensions

Standard efficiency	63S/L	71S/L			For Other Connection Possibilities please see ⇨🕮 555 & 557
Energy efficiency					
AB	4.53	4.88			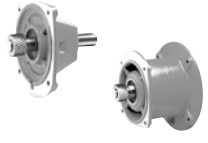
AB (BR)	4.84	5.24			
C1	21.50	23.07			
C1 (BR)	23.70	25.35			
FP	5.12	5.71			

(BR) denotes Brakemotor

Dimensions in Inches
DIMENSIONS
ALTERNATE SHAFTS SEE PAGES 566 - 573

Send Quote Requests to info@automatedpt.com
Call +1(800)985-6929 To Order or Order Online At Nordgearmotors.com

SK 9023.1 + NEMA




DRIVESYSTEMS

SK 9023.1

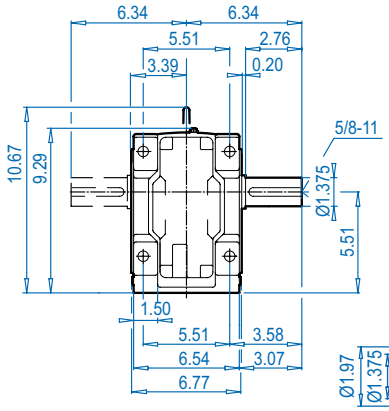

SK 9023.1AX

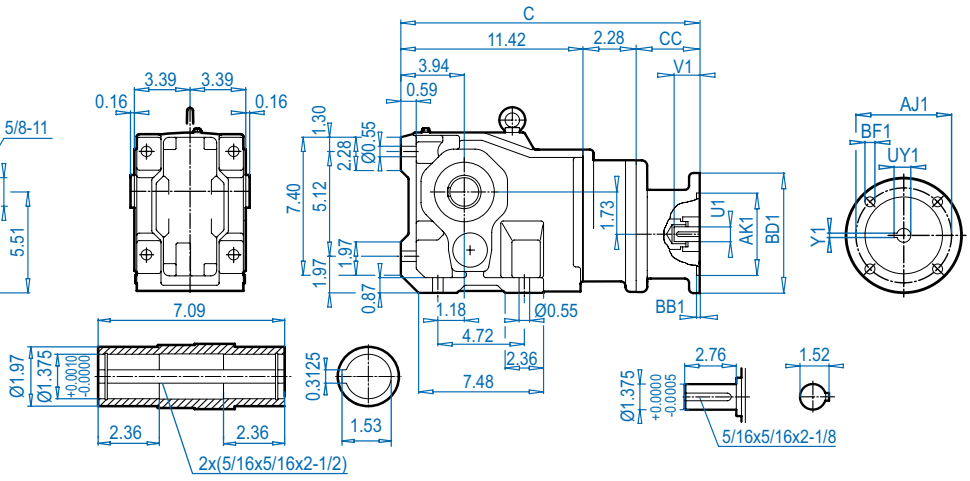

NEMA Input

DIMENSIONS

Dimensions in Inches

SK 9023.1VF

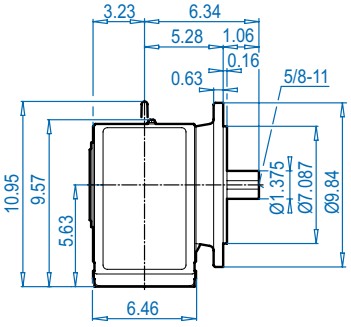

SK 9023.1AF

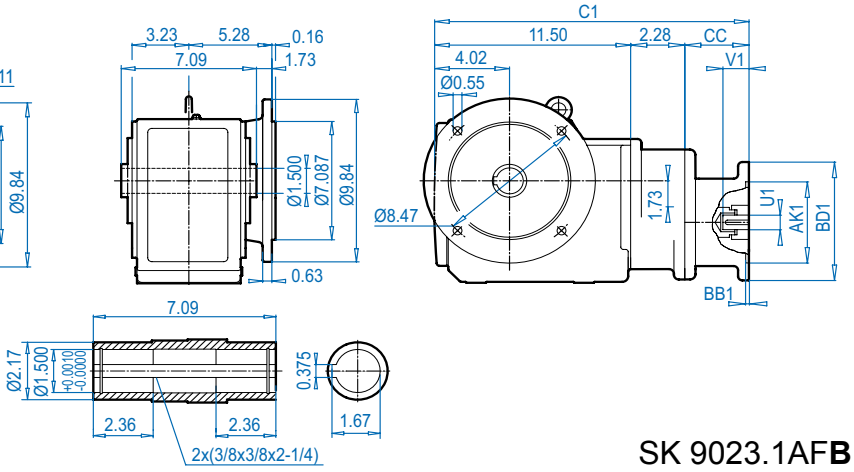

ALTERNATE SHAFTS SEE PAGES 566 - 573

SK 9023.1AXB ⇨🕮 574

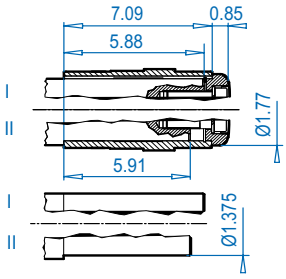

SK 9023.1AFB ⇨🕮 574

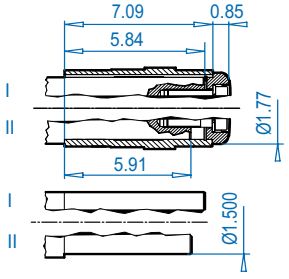

NEMA Dimensions

Type	AJ1	AK1	BB1	BD1	BF1	U1	V1	UY1	Y1	C	C1	CC
56C	5.88	4.500	0.18	6.54	0.43	0.625	2.06	0.71	0.188	18.20	18.28	4.50

Send Quote Requests to info@automatedpt.com
Call +1(800)985-6929 To Order or Order Online At Nordgearmotors.com

DRIVESYSTEMS

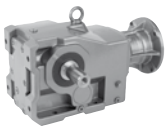



SK 9023.1 + NEMA

SK 9023.1AZ

NEMA Input

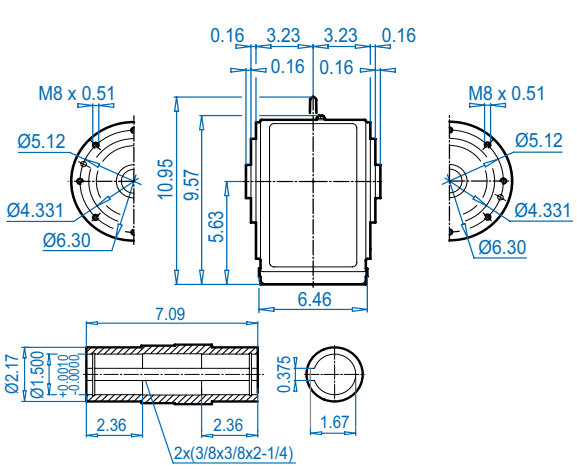

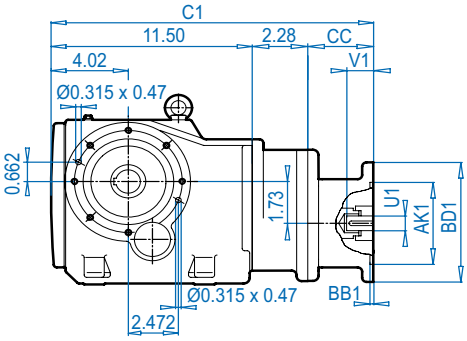

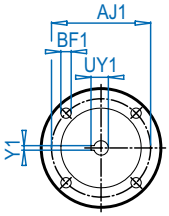

Dimensions in inches
DIMENSIONS

SK 9023.1AZ**K**

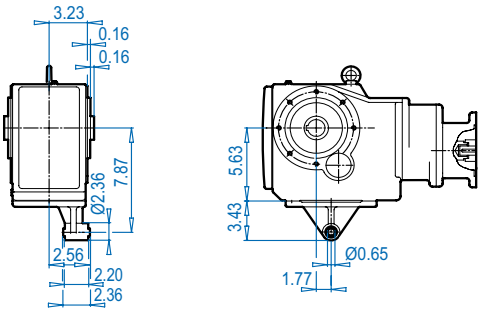

SK 9023.1AZ**D**

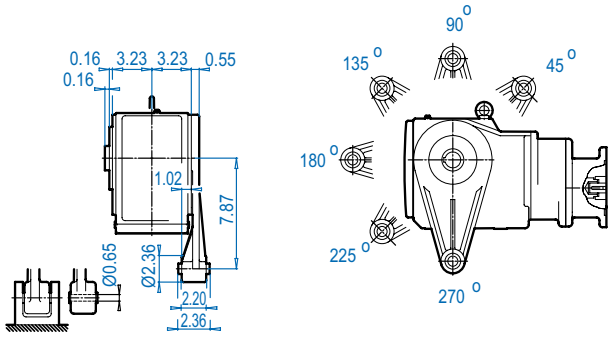

SK 9023.1AZ**B** ⇨🕮 574

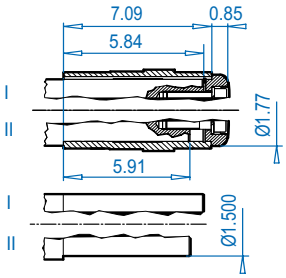

SK 9023.1AZ**S** ⇨🕮 571

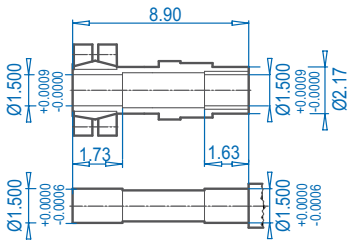

SK 9023.1AZ**SH**

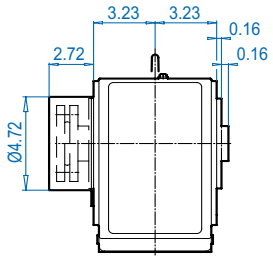

ALTERNATE SHAFTS SEE PAGES 566 - 573

NEMA Dimensions

Type	AJ1	AK1	BB1	BD1	BF1	U1	V1	UY1	Y1	C1	CC
56C	5.88	4.500	0.18	6.54	0.43	0.625	2.06	0.71	0.188	18.28	4.50

Send Quote Requests to info@automatedpt.com
Call +1(800)985-6929 To Order or Order Online At Nordgearmotors.com

SK 9032.1 + Motor




DRIVESYSTEMS

SK 9032.1

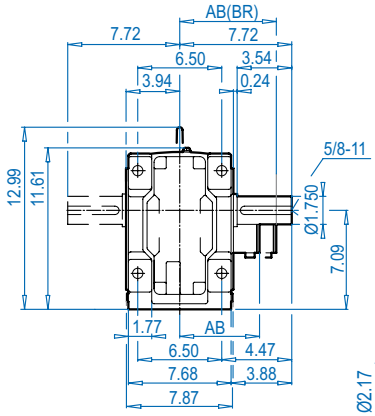

SK 9032.1AX

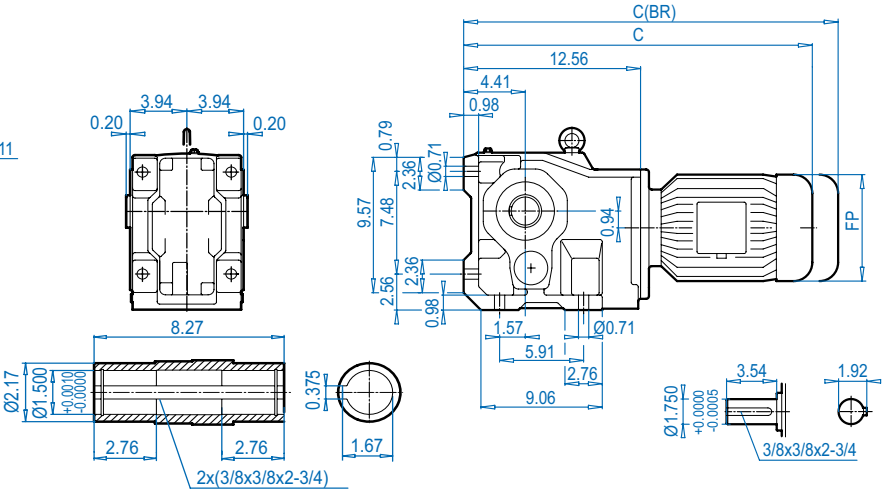

SK 9032.1VF

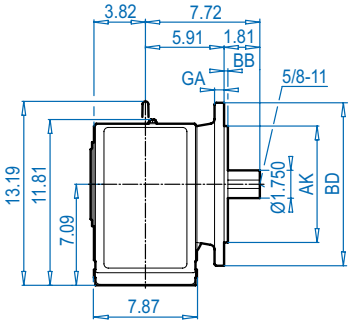

SK 9032.1AF

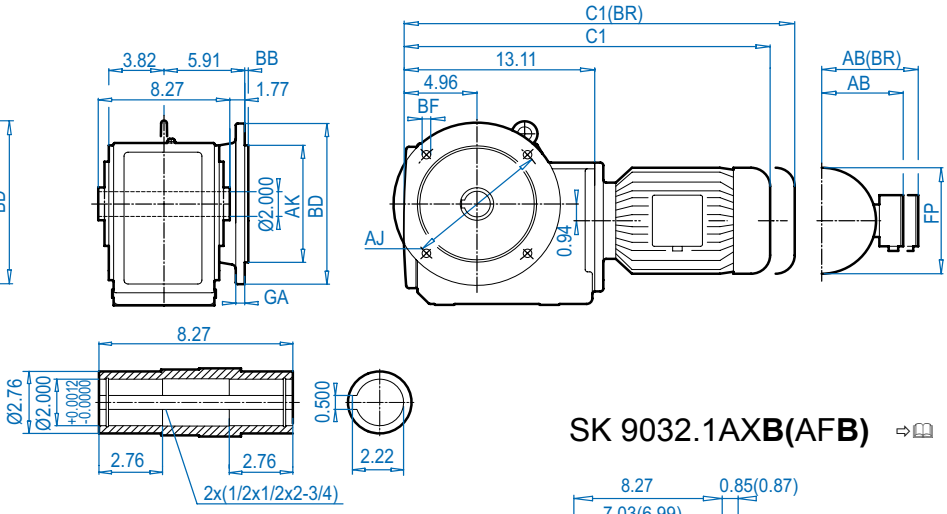

SK 9032.1AX**B**(AF**B**) ⇨🕮 574

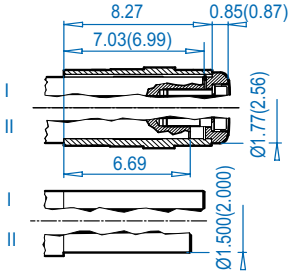

Mounting flange

BD (mm)	AJ	AK	BB	BF	GA
9.84 (250)	8.47	7.087 + 0.0005 - 0.0004	0.16	0.55	0.63
11.81 (300)	10.43	9.055 + 0.0006 - 0.0005	0.16	0.55	0.79

Motor dimensions

Standard efficiency	71S/L	80S/L	90S/L	100L		132S/M	For Other Connection Possibilities please see ⇨🕮 555 & 557
Energy efficiency		80LH	90SH/LH	100LH	112MH	132SH/MH	
AB	4.88	5.59	5.79	6.65	7.05	8.03	
AB (BR)	5.24	5.63	5.83	6.26	6.69	7.72	
C1	22.17	23.15	24.76	25.94	26.85	30.24	
C1 (BR)	24.45	25.67	27.72	29.53	30.51	34.45	
C	21.61	22.60	24.21	25.39	26.30	29.69	
C (BR)	23.90	25.12	27.17	28.98	29.96	33.90	
FP	5.71	6.50	7.20	7.91	8.98	10.47	

(BR) denotes Brakemotor

Send Quote Requests to info@automatedpt.com
Call +1(800)985-6929 To Order or Order Online At Nordgearmotors.com

DRIVESYSTEMS



SK 9032.1 + Motor

SK 9032.1AZ

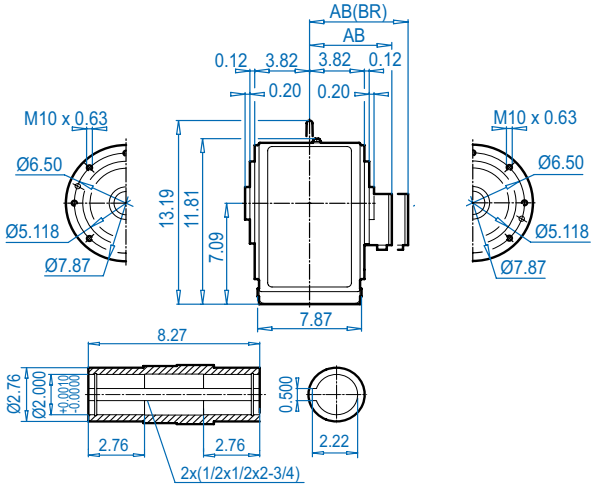

SK 9032.1AZ**K**

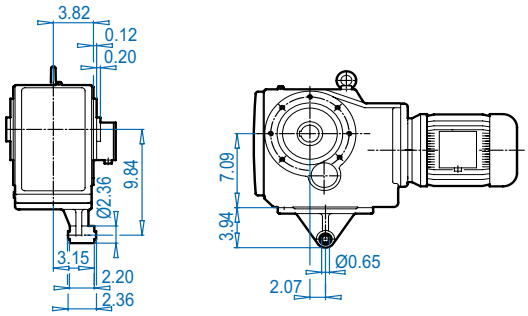

SK 9032.1AZ**D**

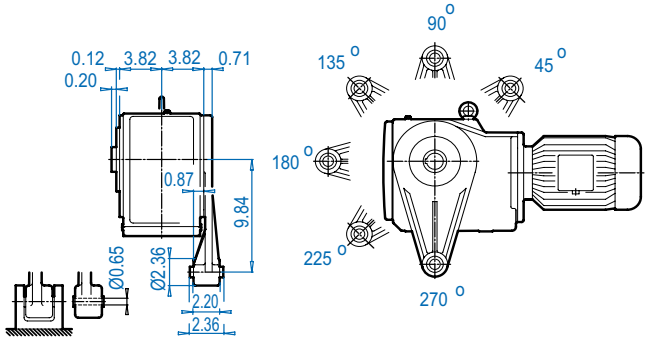

SK 9032.1AZ**B** ⇨📖 574

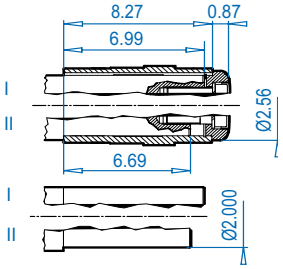

SK 9032.1AZ**S** ⇨📖 571

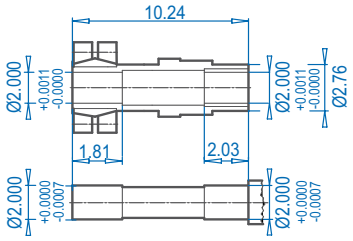

SK 9032.1AZ**SH**

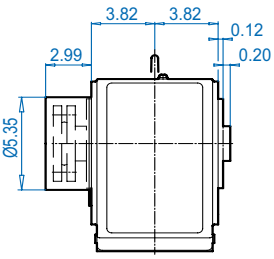

Motor dimensions

Standard efficiency	71S/L	80S/L	90S/L	100L		132S/M	For Other Connection Possibilities please see ⇨📖 555 & 557
Energy efficiency		80LH	90SH/LH	100LH	112MH	132SH/MH	
AB	4.88	5.59	5.79	6.65	7.05	8.03	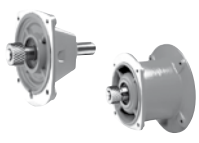
AB (BR)	5.24	5.63	5.83	6.26	6.69	7.72	
C1	22.17	23.15	24.76	25.94	26.85	30.24	
C1 (BR)	24.45	25.67	27.72	29.53	30.51	34.45	
FP	5.71	6.50	7.20	7.91	8.98	10.47	

(BR) denotes Brakemotor

Dimensions in Inches DIMENSIONS
ALTERNATE SHAFTS SEE PAGES 566 - 573

Send Quote Requests to info@automatedpt.com
Call +1(800)985-6929 To Order or Order Online At Nordgearmotors.com

SK 9032.1 + NEMA




SK 9032.1

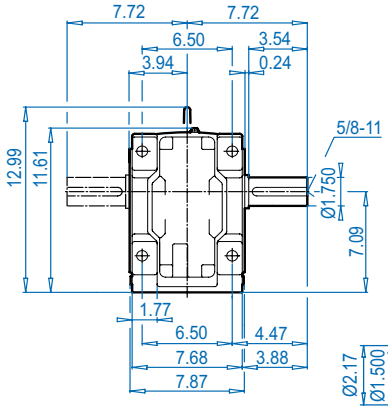

SK 9032.1AX

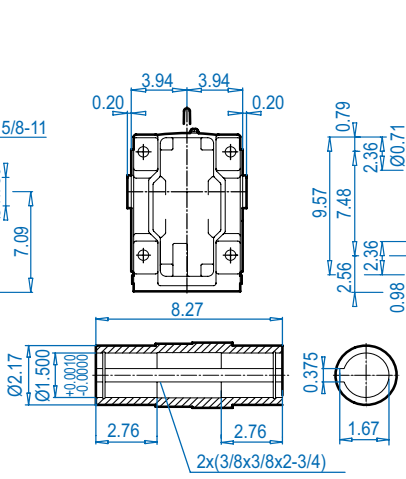

NEMA Input

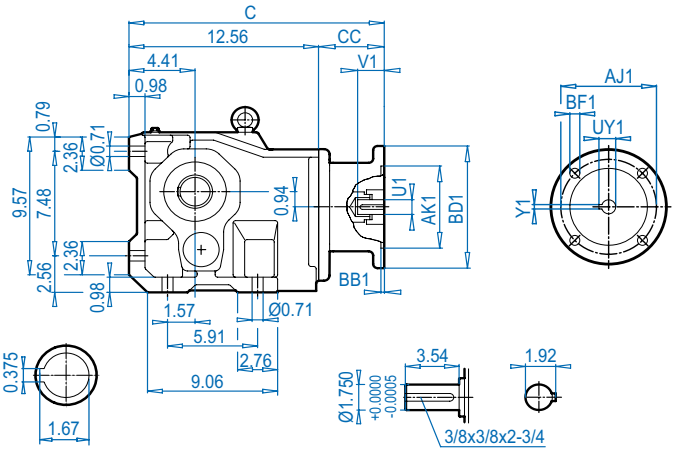

DIMENSIONS
Dimensions in Inches

SK 9032.1VF

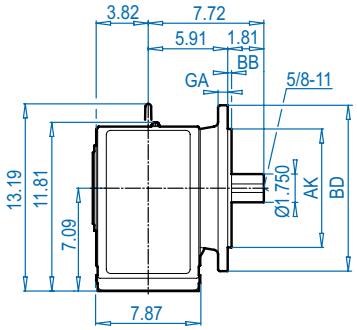

SK 9032.1AF

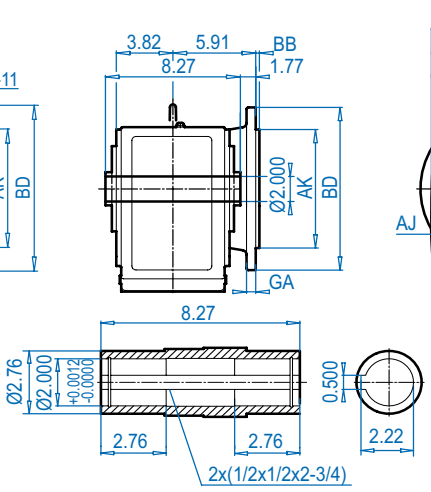

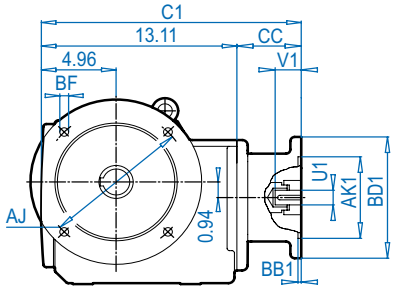

SK 9032.1AX**B(**AF**B)** ⇨🕮 574

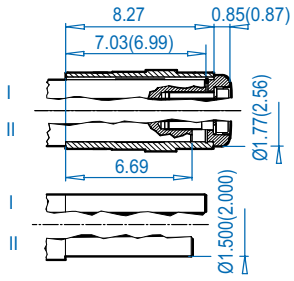

Mounting flange

BD (mm)	AJ	AK	BB	BF	GA
9.84 (250)	8.47	7.087 + 0.0005 - 0.0004	0.16	0.55	0.63
11.81 (300)	10.43	9.055 + 0.0006 - 0.0005	0.16	0.55	0.79

NEMA Dimensions

Type	AJ1	AK1	BB1	BD1	BF1	U1	V1	UY1	Y1	C	C1	CC
56C	5.88	4.500	0.18	6.54	0.43	0.625	2.06	0.71	0.188	17.16	17.71	4.60
140TC	5.88	4.500	0.18	6.54	0.43	0.875	2.12	0.96	0.188	17.16	17.71	4.60
180TC	7.25	8.500	0.23	9.17	0.59	1.125	2.62	1.24	0.250	19.16	19.71	6.65
210TC	7.25	8.500	0.23	9.17	0.59	1.375	3.12	1.52	0.312	19.16	19.71	6.65

ALTERNATE SHAFTS SEE PAGES 566 - 573

Send Quote Requests to info@automatedpt.com
Call +1(800)985-6929 To Order or Order Online At Nordgearmotors.com

DRIVESYSTEMS

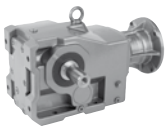



SK 9032.1 + NEMA

SK 9032.1AZ

NEMA Input

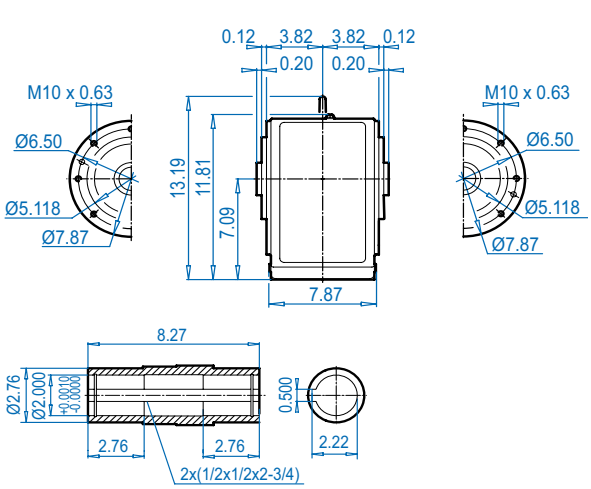

Dimensions in inches
DIMENSIONS

SK 9032.1AZ**K**

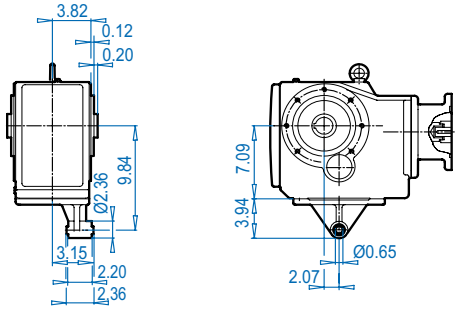

SK 9032.1AZ**D**

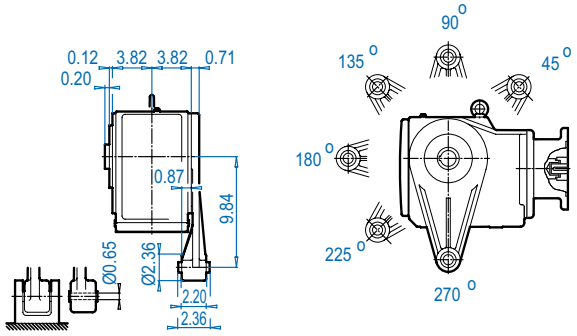

SK 9032.1AZ**B** ⇨🕮 574

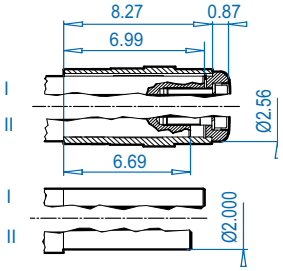

SK 9032.1AZ**S** ⇨🕮 571

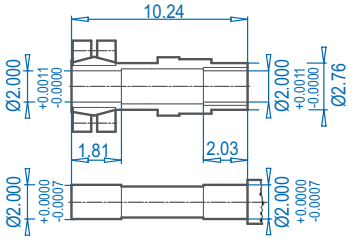

SK 9032.1AZ**SH**

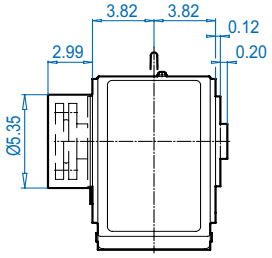

ALTERNATE SHAFTS SEE PAGES 566 - 573

NEMA Dimensions

Type	AJ1	AK1	BB1	BD1	BF1	U1	V1	UY1	Y1	C1	CC
56C	5.88	4.500	0.18	6.54	0.43	0.625	2.06	0.71	0.188	17.71	4.60
140TC	5.88	4.500	0.18	6.54	0.43	0.875	2.12	0.96	0.188	17.71	4.60
180TC	7.25	8.500	0.23	9.17	0.59	1.125	2.62	1.24	0.250	19.71	6.65
210TC	7.25	8.500	0.23	9.17	0.59	1.375	3.12	1.52	0.312	19.71	6.65

Send Quote Requests to info@automatedpt.com
Call +1(800)985-6929 To Order or Order Online At Nordgearmotors.com

SK 9033.1 + Motor




DRIVESYSTEMS

SK 9033.1

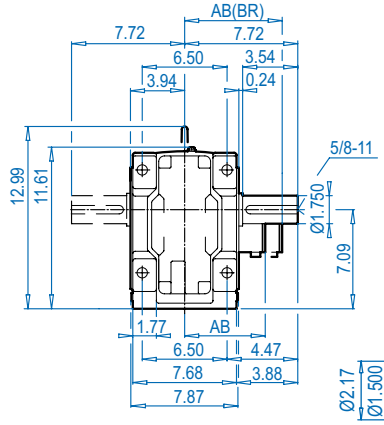

SK 9033.1AX

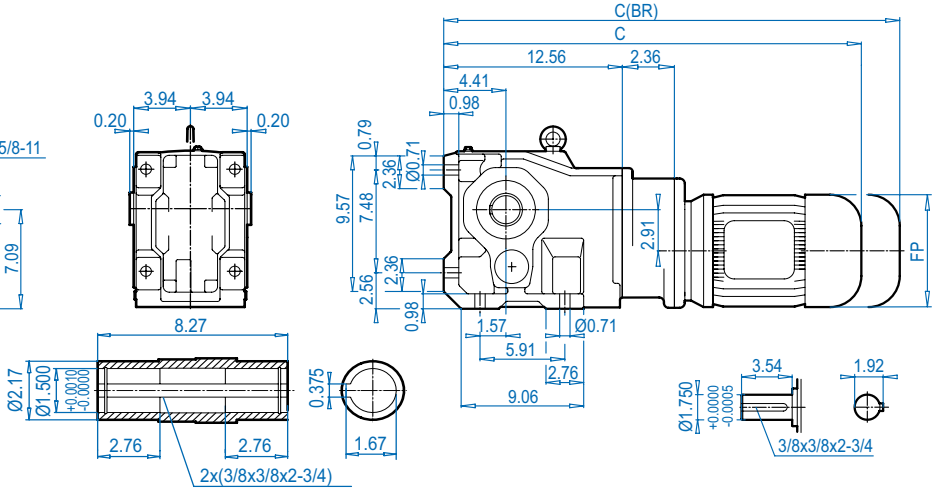

SK 9033.1VF

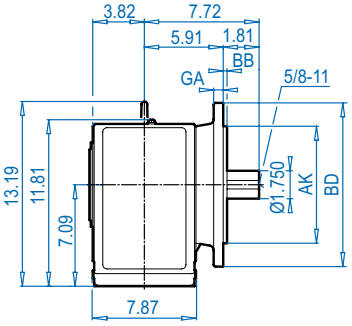

SK 9033.1AF

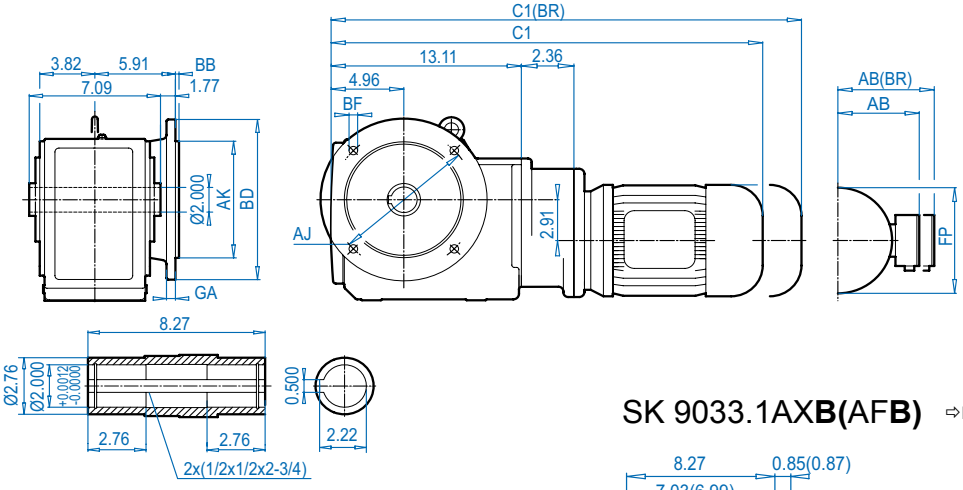

SK 9033.1AX**B**(AF**B**) ⇨🕮 574

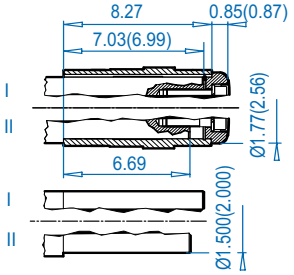

Mounting flange

BD (mm)	AJ	AK	BB	BF	GA
9.84 (250)	8.47	7.087 + 0.0005 - 0.0004	0.16	0.55	0.63
11.81 (300)	10.43	9.055 + 0.0006 - 0.0005	0.16	0.55	0.79

Motor dimensions

Standard efficiency	63S/L	71S/L	80S/L				For Other Connection Possibilities please see ⇨🕮 555 & 557
Energy efficiency			80LH				
AB	4.53	4.88	5.59				
AB (BR)	4.84	5.24	5.63				
C1	23.19	24.76	25.75				
C1 (BR)	25.39	27.05	28.27				
C	22.64	24.21	25.20				
C (BR)	24.84	26.50	27.72				
FP	5.12	5.71	6.50				

(BR) denotes Brakemotor

Send Quote Requests to info@automatedpt.com
Call +1(800)985-6929 To Order or Order Online At Nordgearmotors.com

DRIVESYSTEMS

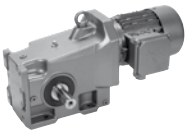



SK 9033.1 + Motor

SK 9033.1AZ

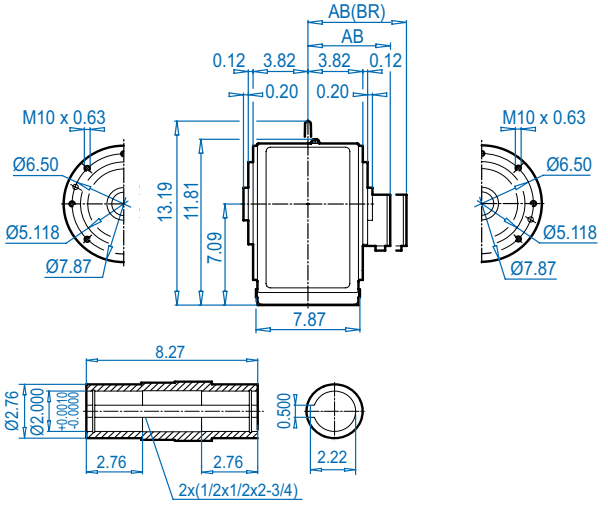

SK 9033.1AZ**K**

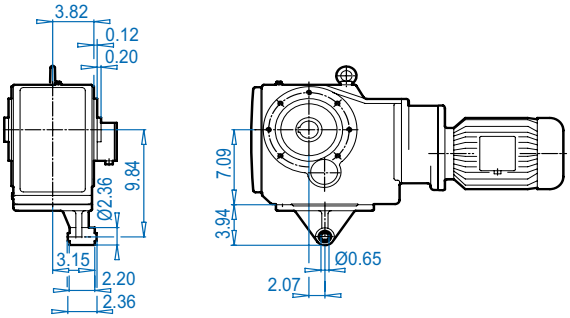

SK 9033.1AZ**D**

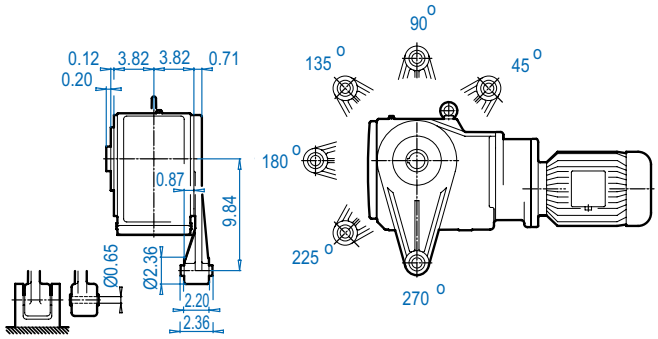

SK 9033.1AZ**B** ⇨📖 574

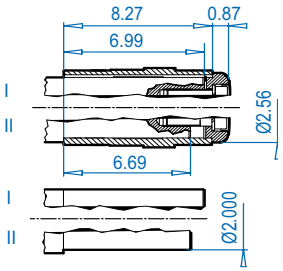

SK 9033.1AZ**S** ⇨📖 571

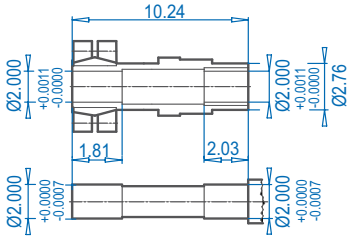

SK 9033.1AZ**SH**

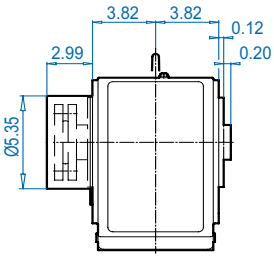

Motor dimensions

Standard efficiency	63S/L	71S/L	80S/L				For Other Connection Possibilities please see ⇨📖 555 & 557
Energy efficiency			80LH				
AB	4.53	4.88	5.59				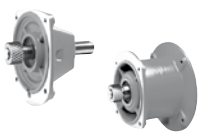
AB (BR)	4.84	5.24	5.63				
C1	23.19	24.76	25.75				
C1 (BR)	25.39	27.05	28.27				
FP	5.12	5.71	6.50				

(BR) denotes Brakemotor

Dimensions in Inches DIMENSIONS
ALTERNATE SHAFTS SEE PAGES 566 - 573

Send Quote Requests to info@automatedpt.com
Call +1(800)985-6929 To Order or Order Online At Nordgearmotors.com

SK 9033.1 + NEMA




SK 9033.1

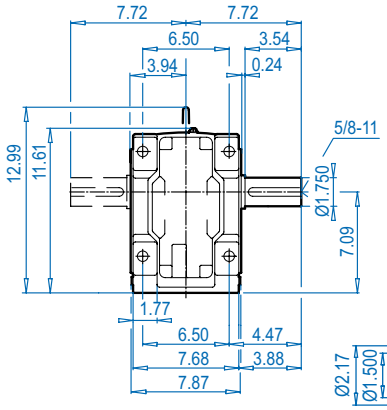

SK 9033.1AX

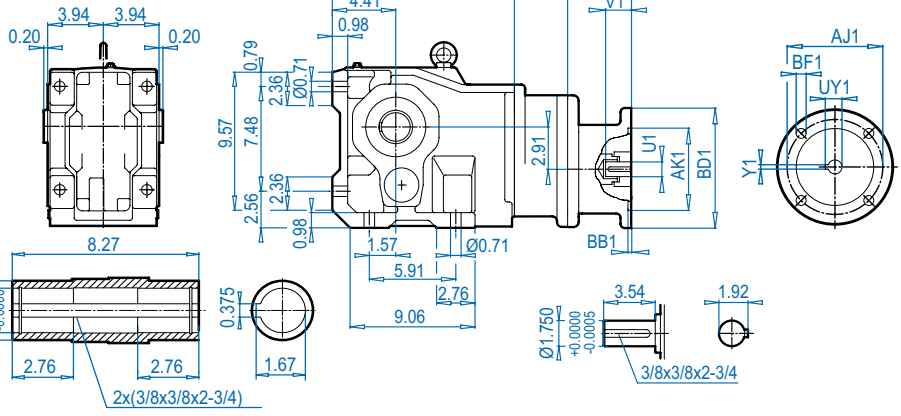

NEMA Input

SK 9033.1VF

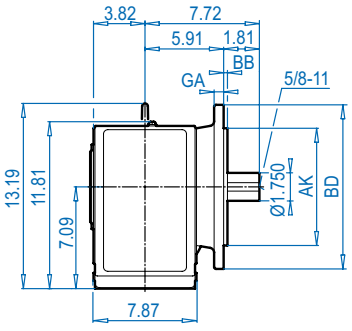

SK 9033.1AF

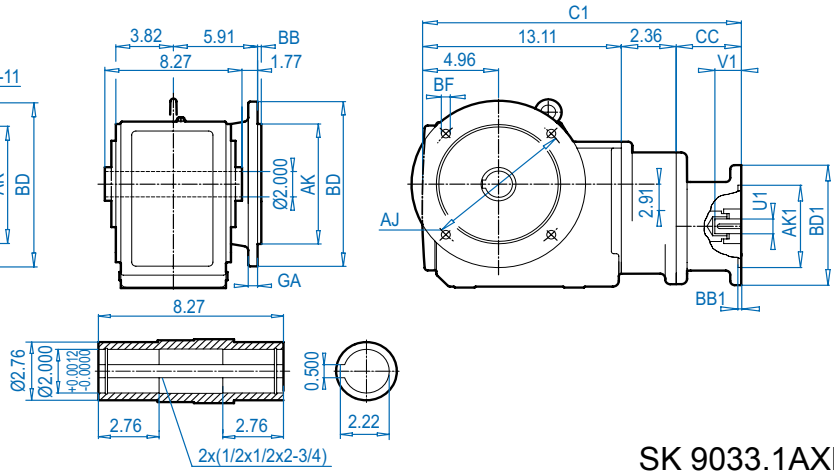

SK 9033.1AX**B**(AF**B**) ⇨🕮 574

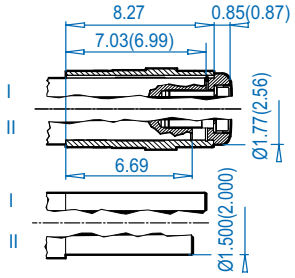

Mounting flange

BD (mm)	AJ	AK	BB	BF	GA
9.84 (250)	8.47	7.087 + 0.0005 - 0.0004	0.16	0.55	0.63
11.81 (300)	10.43	9.055 + 0.0006 - 0.0005	0.16	0.55	0.79

NEMA Dimensions

Type	AJ1	AK1	BB1	BD1	BF1	U1	V1	UY1	Y1	C	C1	CC
56C	5.88	4.500	0.18	6.54	0.43	0.625	2.06	0.71	0.188	19.42	19.97	4.50
140TC	5.88	4.500	0.18	6.54	0.43	0.875	2.12	0.96	0.188	19.42	19.97	4.50

DIMENSIONS Dimensions in Inches
ALTERNATE SHAFTS SEE PAGES 566 - 573

Send Quote Requests to info@automatedpt.com
Call +1(800)985-6929 To Order or Order Online At Nordgearmotors.com

DRIVESYSTEMS

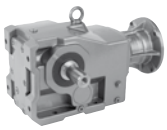



SK 9033.1 + NEMA

SK 9033.1AZ

NEMA Input

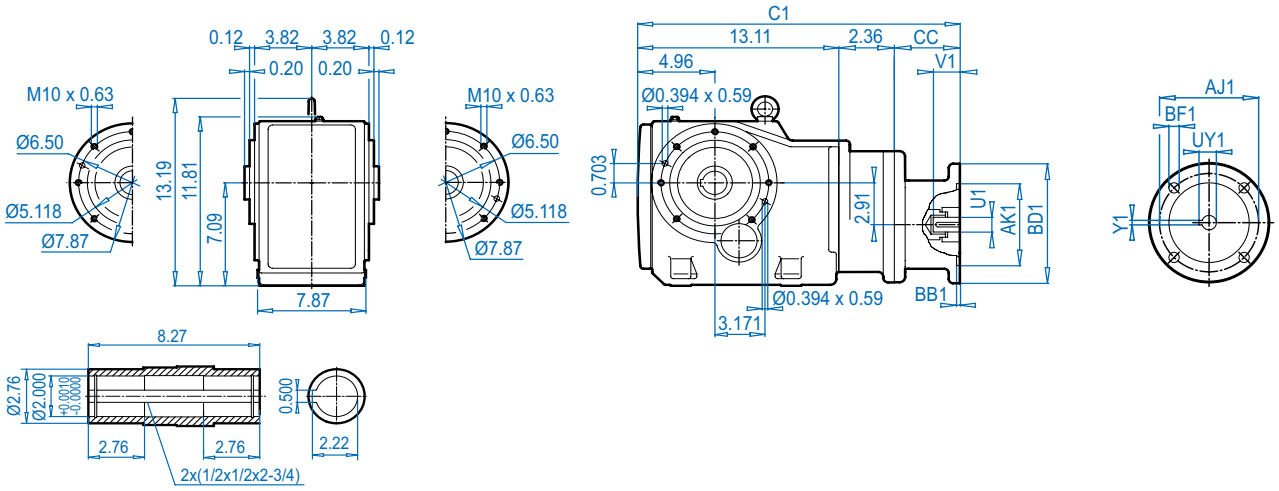

Dimensions in Inches
DIMENSIONS

SK 9033.1AZ**K**

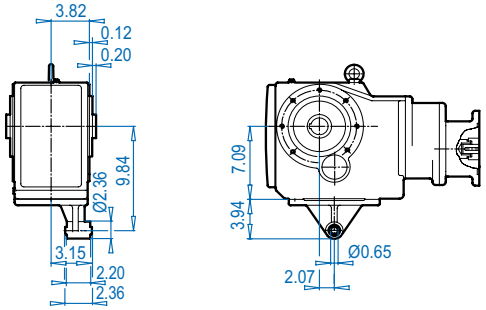

SK 9033.1AZ**D**

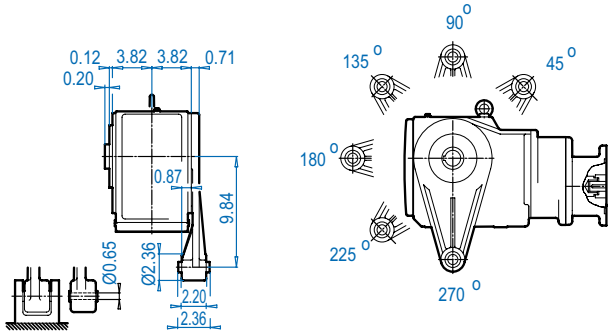

SK 9033.1AZ**B** ⇨🕮 574

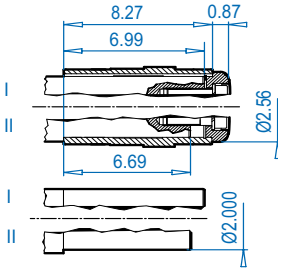

SK 9033.1AZ**S** ⇨🕮 571

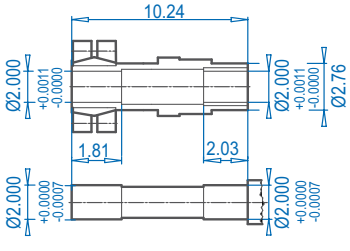

SK 9033.1AZ**SH**

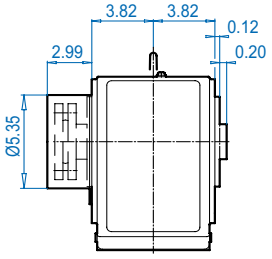

NEMA Dimensions

Type	AJ1	AK1	BB1	BD1	BF1	U1	V1	UY1	Y1	C1	CC
56C	5.88	4.500	0.18	6.54	0.43	0.625	2.06	0.71	0.188	19.97	4.50
140TC	5.88	4.500	0.18	6.54	0.43	0.875	2.12	0.96	0.188	19.97	4.50

ALTERNATE SHAFTS SEE PAGES 566 - 573

Send Quote Requests to info@automatedpt.com
Call +1(800)985-6929 To Order or Order Online At Nordgearmotors.com

SK 9042.1 + Motor




DRIVESYSTEMS

SK 9042.1

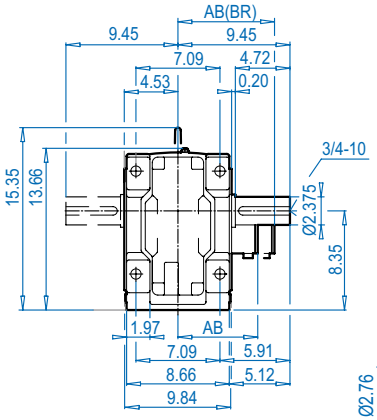

SK 9042.1AX

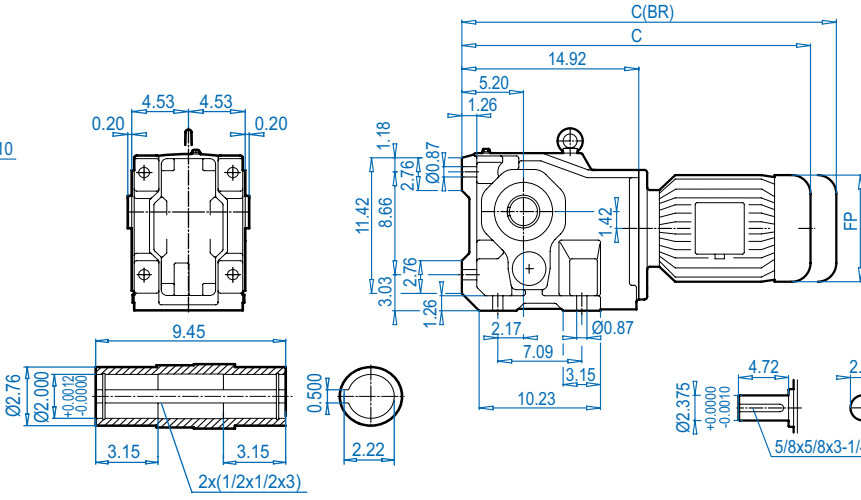

SK 9042.1VF

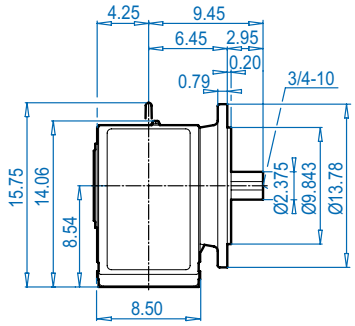

SK 9042.1AF

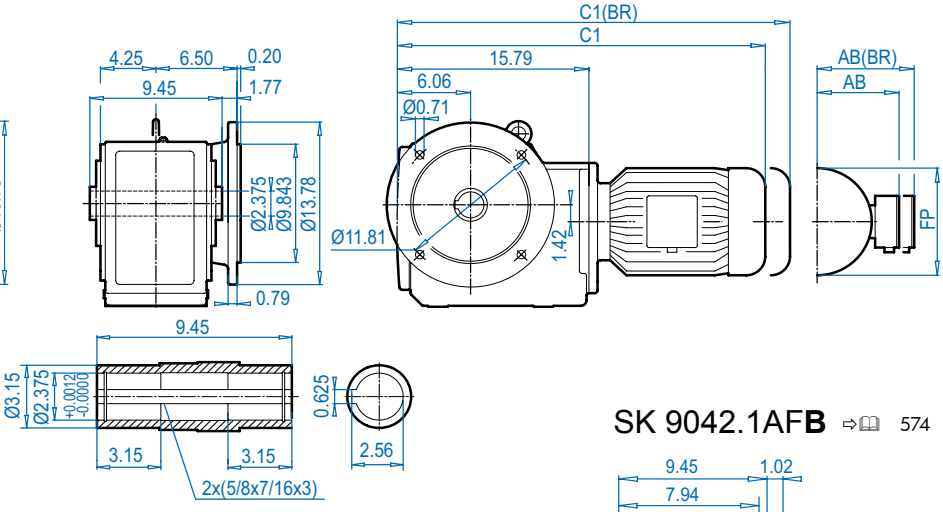

SK 9042.1AXB ⇨🕮 574

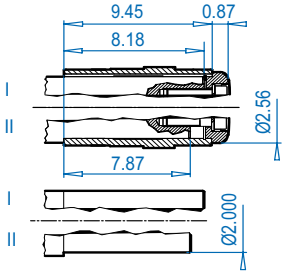

SK 9042.1AFB ⇨🕮 574

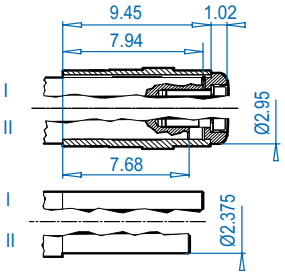

Motor dimensions

Standard efficiency	90S/L	100L		132S/M	160M/L		For Other Connection Possibilities please see ⇨🕮 555 & 557
Energy efficiency	90SH/LH	100LH	112MH	132SH/MH	160MH	160LH	
AB	5.79	6.65	7.05	8.03	8.90	8.90	
AB (BR)	5.83	6.26	6.69	7.72	8.90	8.90	
C1	26.65	27.83	28.74	32.13	34.61	34.61	
C1 (BR)	29.61	31.42	32.40	36.34	41.19	41.19	
C	25.79	26.97	27.87	31.26	33.74	33.74	
C (BR)	28.74	30.55	31.54	35.47	40.32	40.32	
FP	7.20	7.91	8.98	10.47	12.60	12.60	

(BR) denotes Brakemotor

Send Quote Requests to info@automatedpt.com
Call +1(800)985-6929 To Order or Order Online At Nordgearmotors.com




SK 9042.1 + Motor

SK 9042.1AZ

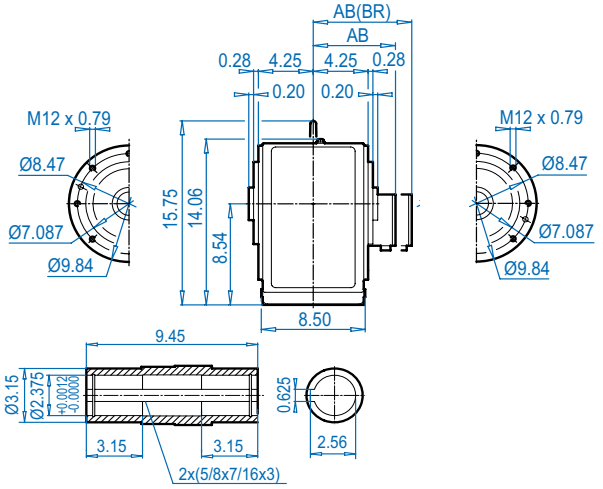

SK 9042.1AZ**K**

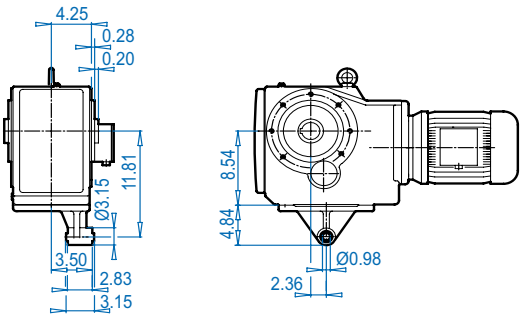

SK 9042.1AZ**D**

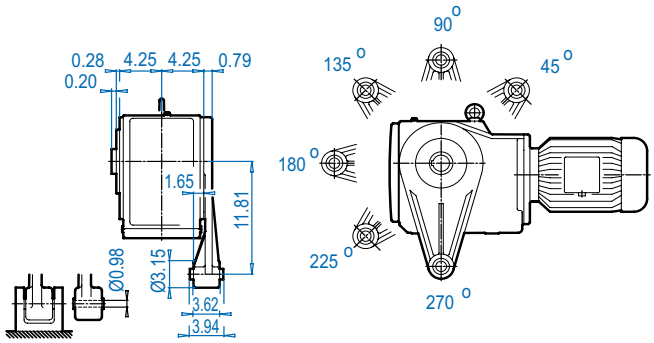

SK 9042.1AZ**B** ⇨🕮 574

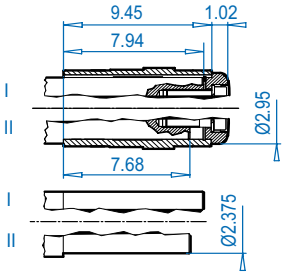

SK 9042.1AZ**S** ⇨🕮 571

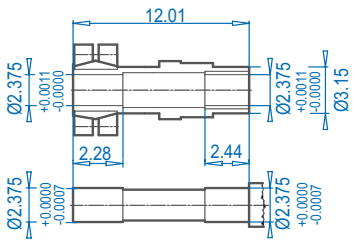

SK 9042.1AZ**SH**

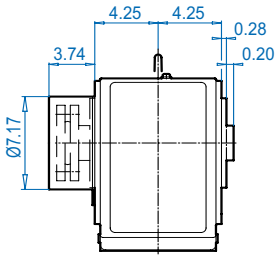

Motor dimensions

Standard efficiency	90S/L	100L		132S/M	160M/L		For Other Connection Possibilities please see ⇨🕮 555 & 557
Energy efficiency	90SH/LH	100LH	112MH	132SH/MH	160MH	160LH	
AB	5.79	6.65	7.05	8.03	8.90	8.90	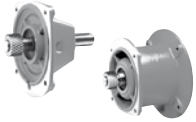
AB (BR)	5.83	6.26	6.69	7.72	8.90	8.90	
C1	26.65	27.83	28.74	32.13	34.61	34.61	
C1 (BR)	29.61	31.42	32.40	36.34	41.19	41.19	
FP	7.20	7.91	8.98	10.47	12.60	12.60	

(BR) denotes Brakemotor

Dimensions in Inches
DIMENSIONS
ALTERNATE SHAFTS SEE PAGES 566 - 573

Send Quote Requests to info@automatedpt.com
Call +1(800)985-6929 To Order or Order Online At Nordgearmotors.com

SK 9042.1 + NEMA





DRIVESYSTEMS

SK 9042.1

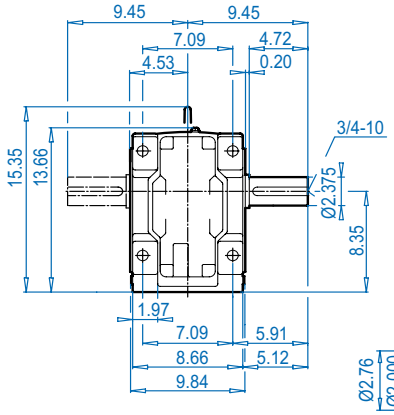

SK 9042.1AX

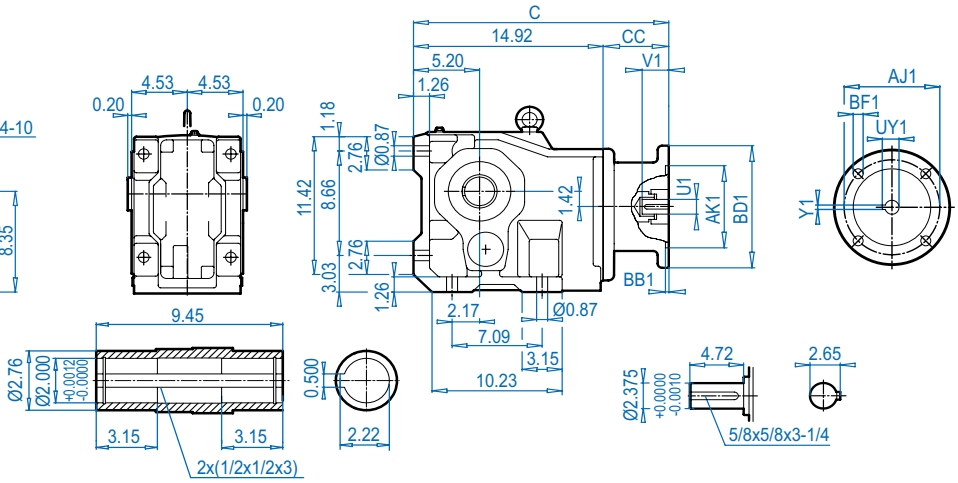

DIMENSIONS

Dimensions in Inches

SK 9042.1VF

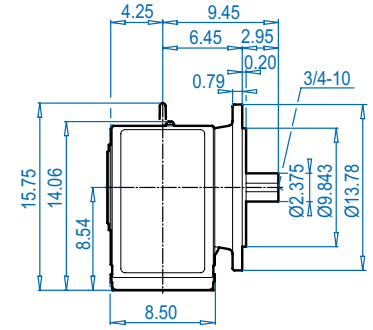

SK 9042.1AF

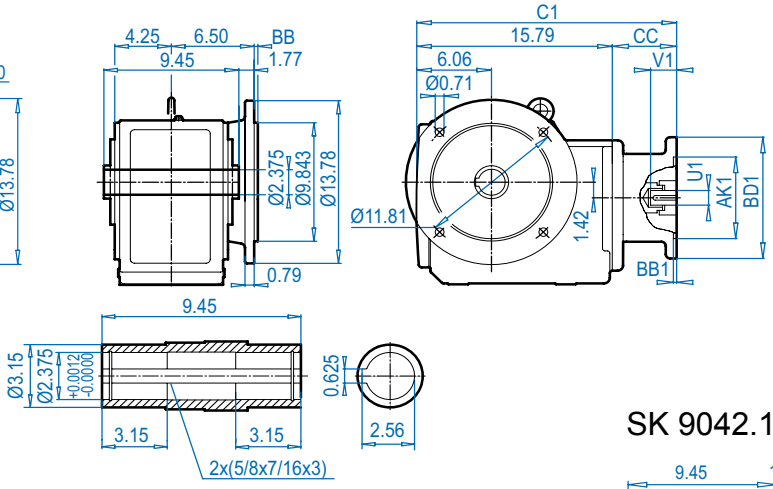

ALTERNATE SHAFTS SEE PAGES 566 - 573

SK 9042.1AXB ⇨🕮 574

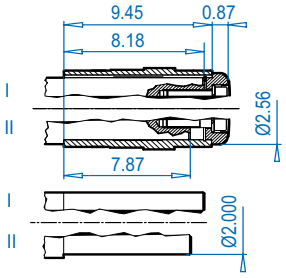

SK 9042.1AFB ⇨🕮 574

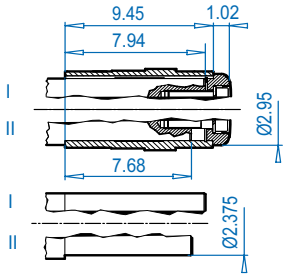

NEMA Dimensions

Type	AJ1	AK1	BB1	BD1	BF1	U1	V1	UY1	Y1	C	C1	CC
56C	5.88	4.500	0.20	6.54	0.43	0.625	2.06	0.71	0.188	19.22	20.09	4.30
140TC	5.88	4.500	0.20	6.54	0.43	0.875	2.12	0.96	0.188	19.22	20.09	4.30
180TC	7.25	8.500	0.23	9.17	0.59	1.125	2.62	1.24	0.250	22.82	23.69	7.90
210TC	7.25	8.500	0.23	9.17	0.59	1.375	3.12	1.52	0.312	22.82	23.69	7.90
250TC	7.25	8.500	0.23	9.17	0.59	1.625	3.75	1.80	0.375	22.82	23.69	7.90

Send Quote Requests to info@automatedpt.com
Call +1(800)985-6929 To Order or Order Online At Nordgearmotors.com

DRIVESYSTEMS

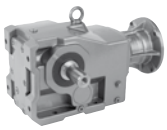



SK 9042.1 + NEMA

SK 9042.1AZ

NEMA Input

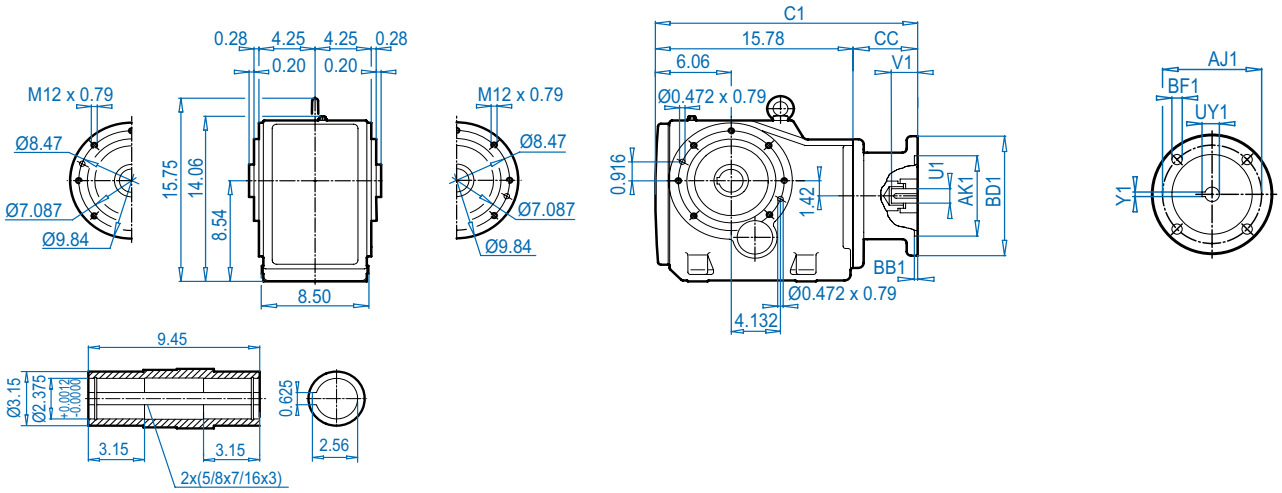

SK 9042.1AZ**K**

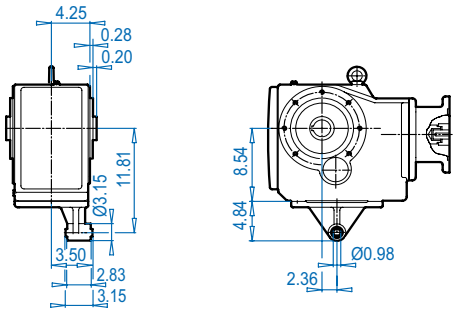

SK 9042.1AZ**D**

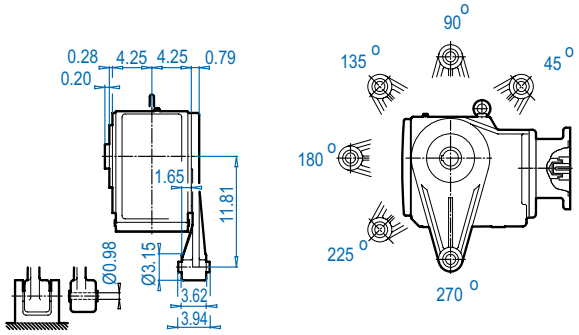

SK 9042.1AZ**B** ⇨🕮 574

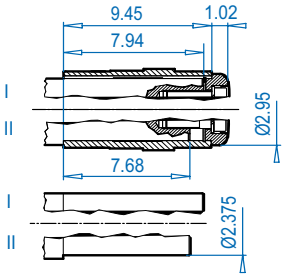

SK 9042.1AZ**S** ⇨🕮 571

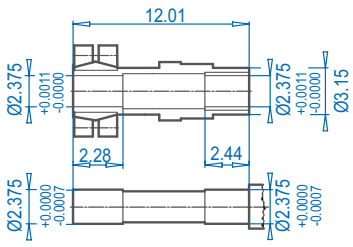

SK 9042.1AZ**SH**

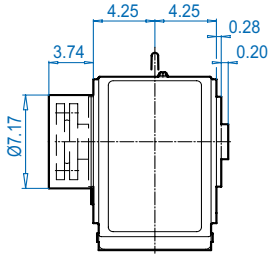

NEMA Dimensions

Type	AJ1	AK1	BB1	BD1	BF1	U1	V1	UY1	Y1	C1	CC
56C	5.88	4.500	0.18	6.54	0.43	0.625	2.06	0.71	0.188	20.09	4.30
140TC	5.88	4.500	0.18	6.54	0.43	0.875	2.12	0.96	0.188	20.09	4.30
180TC	7.25	8.500	0.23	9.17	0.59	1.125	2.62	1.24	0.250	23.69	7.90
210TC	7.25	8.500	0.23	9.17	0.59	1.375	3.12	1.52	0.312	23.69	7.90
250TC	7.25	8.500	0.23	9.17	0.59	1.625	3.75	1.80	0.375	23.69	7.90

Send Quote Requests to info@automatedpt.com
Call +1(800)985-6929 To Order or Order Online At Nordgearmotors.com

SK 9043.1 + Motor




DRIVESYSTEMS

DIMENSIONS
Dimensions in Inches

SK 9043.1

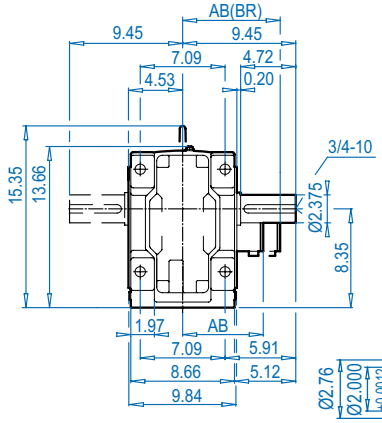

SK 9043.1AX

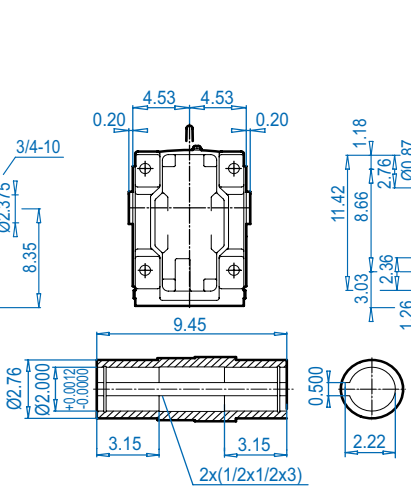

SK 9043.1VF

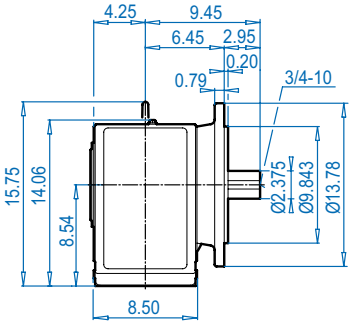

SK 9043.1AF

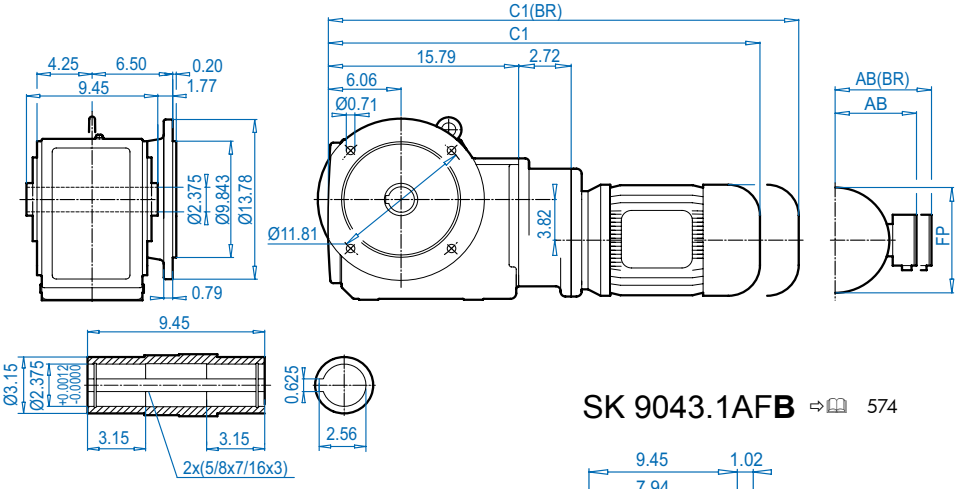

SK 9043.1AX**B** ⇨🕮 574

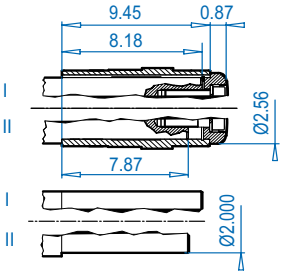

SK 9043.1AF**B** ⇨🕮 574

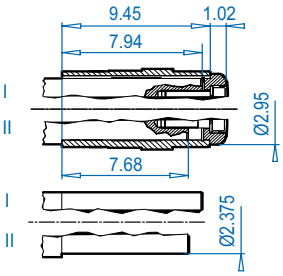

Motor dimensions

Standard efficiency	71S/L	80S/L	90S/L	100L			For Other Connection Possibilities please see ⇨🕮 555 & 557
Energy efficiency		80LH	90SH/LH	100LH			
AB	4.88	5.59	5.79	6.65			
AB (BR)	5.24	5.63	5.83	6.26			
C1	27.56	28.54	30.16	31.34			
C1 (BR)	29.84	31.06	33.11	34.92			
C	26.69	27.68	29.29	30.47			
C (BR)	28.98	30.20	32.24	34.06			
FP	5.71	6.50	7.20	7.91			

(BR) denotes Brakemotor

ALTERNATE SHAFTS SEE PAGES 566 - 573

Send Quote Requests to info@automatedpt.com
Call +1(800)985-6929 To Order or Order Online At Nordgearmotors.com

DRIVESYSTEMS



SK 9043.1 + Motor

SK 9043.1AZ

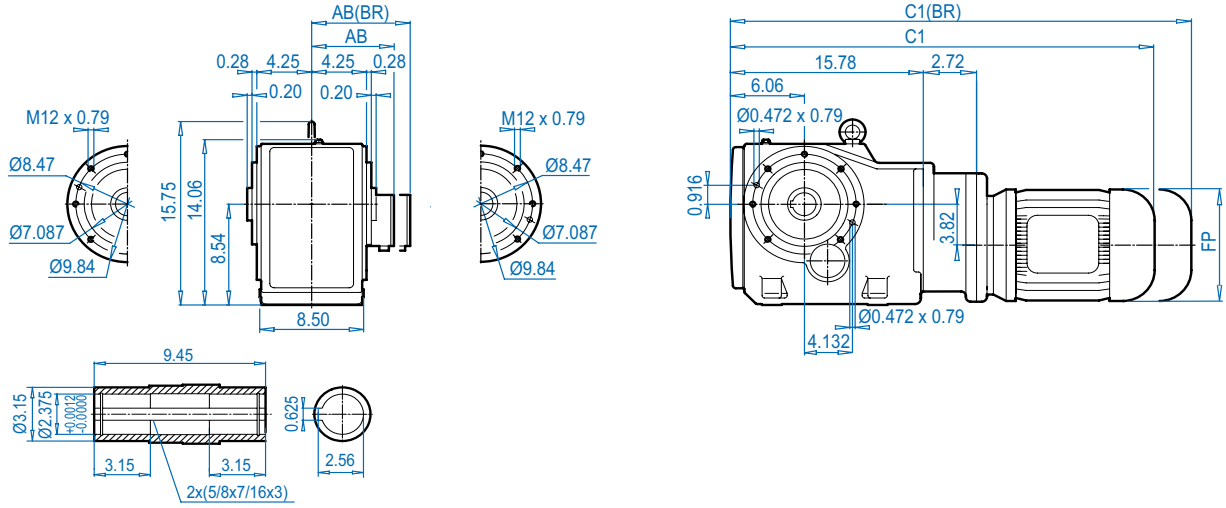

SK 9043.1AZ**K**

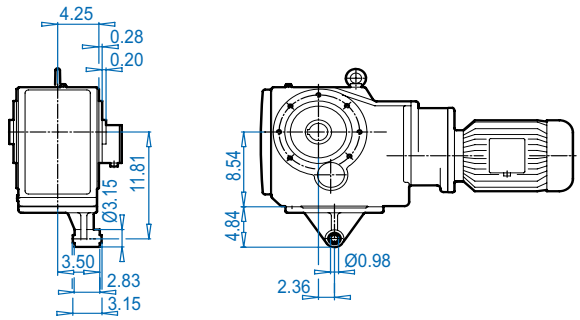

SK 9043.1AZ**D**

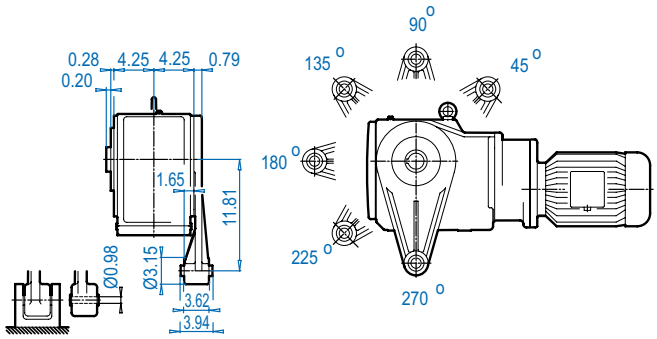

SK 9043.1AZ**B** ⇨🕮 574

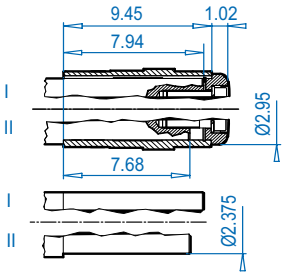

SK 9043.1AZ**S** ⇨🕮 571

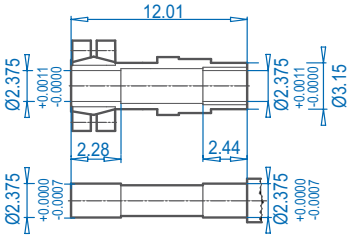

SK 9043.1AZ**SH**

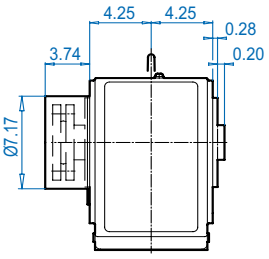

Motor dimensions

Standard efficiency	71S/L	80S/L	90S/L	100L			For Other Connection Possibilities please see ⇨🕮 555 & 557
Energy efficiency		80LH	90SH/LH	100LH			
AB	4.88	5.59	5.79	6.65			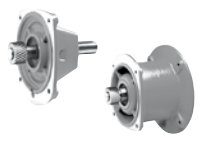
AB (BR)	5.24	5.63	5.83	6.26			
C1	27.56	28.54	30.16	31.34			
C1 (BR)	29.84	31.06	33.11	34.92			
FP	5.71	6.50	7.20	7.91			

(BR)denotes Brakemotor

Send Quote Requests to info@automatedpt.com
Call +1(800)985-6929 To Order or Order Online At Nordgearmotors.com

SK 9043.1 + NEMA




DRIVESYSTEMS

SK 9043.1

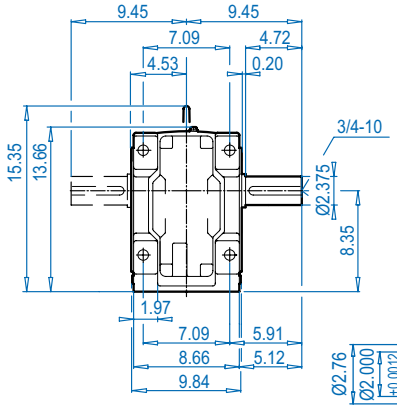

SK 9043.1AX

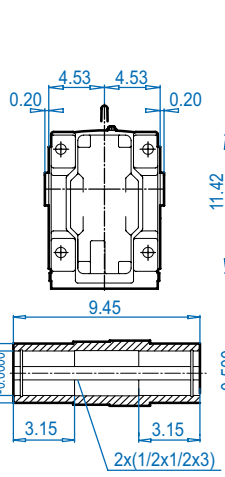

NEMA Input

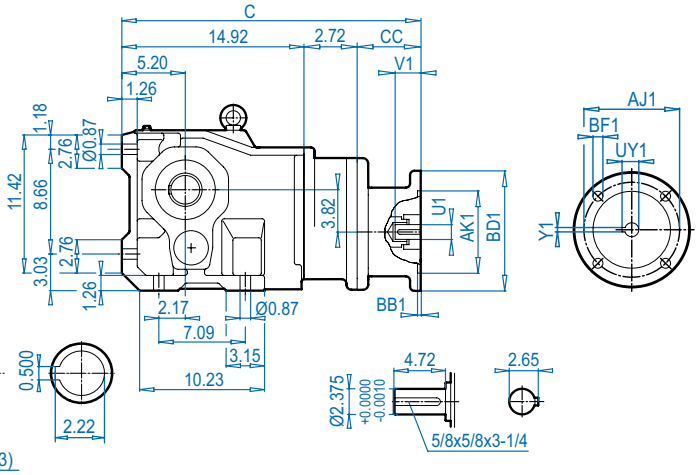

DIMENSIONS
Dimensions in Inches

SK 9043.1VF

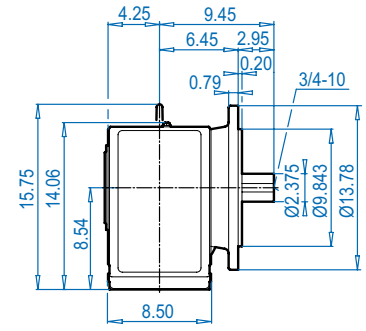

SK 9043.1AF

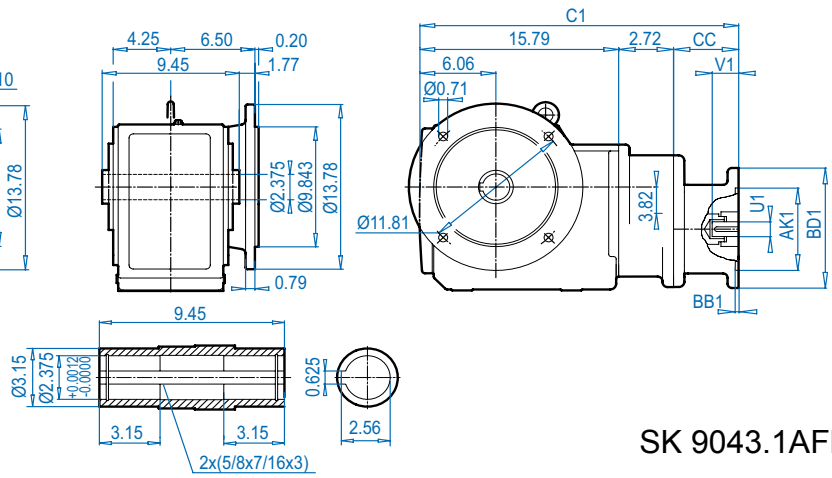

ALTERNATE SHAFTS SEE PAGES 566 - 573

SK 9043.1AX**B** ⇨🕮 574

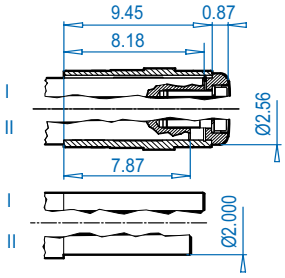

SK 9043.1AF**B** ⇨🕮 574

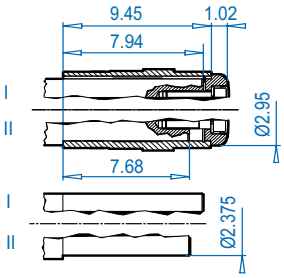

NEMA Dimensions

Type	AJ1	AK1	BB1	BD1	BF1	U1	V1	UY1	Y1	C	C1	CC
56C	5.88	4.500	0.18	6.54	0.43	0.625	2.06	0.71	0.188	22.24	23.11	460
140TC	5.88	4.500	0.18	6.54	0.43	0.875	2.12	0.96	0.188	22.24	23.11	4.60
180 TC	7.25	8.500	0.23	9.17	0.59	1.125	2.62	1.24	0.250	24.24	25.11	6.60

Send Quote Requests to info@automatedpt.com
Call +1(800)985-6929 To Order or Order Online At Nordgearmotors.com

DRIVESYSTEMS

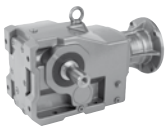



SK 9043.1 + NEMA

SK 9043.1AZ

NEMA Input

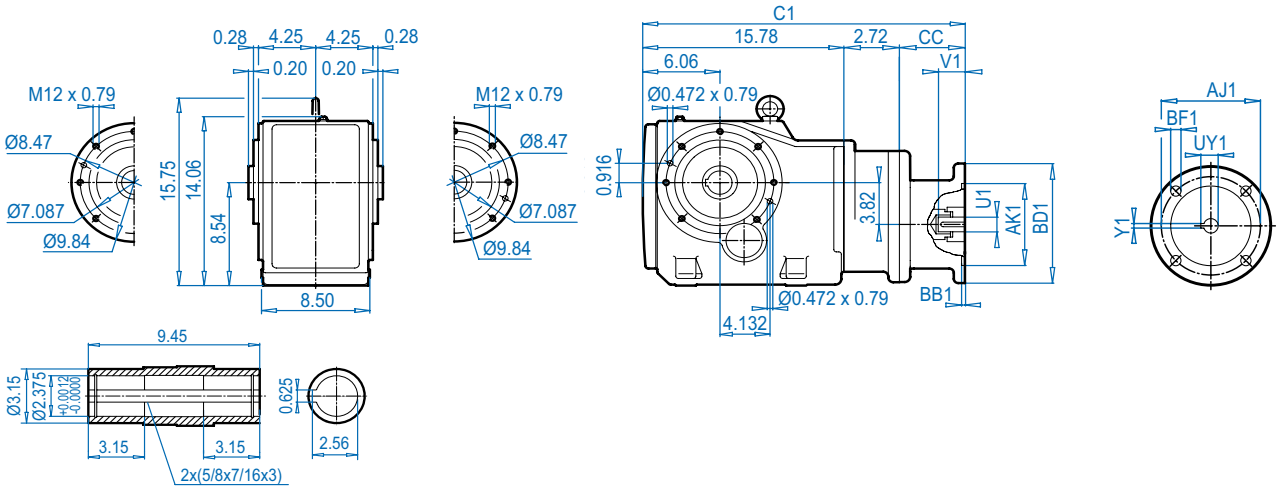

Dimensions in Inches
DIMENSIONS

SK 9043.1AZ**K**

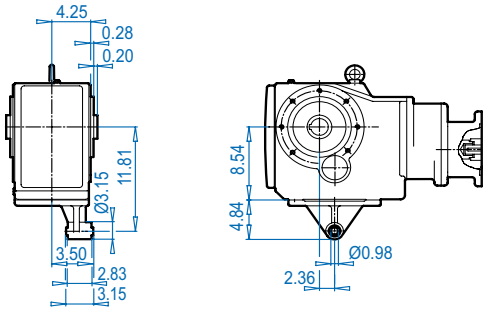

SK 9043.1AZ**D**

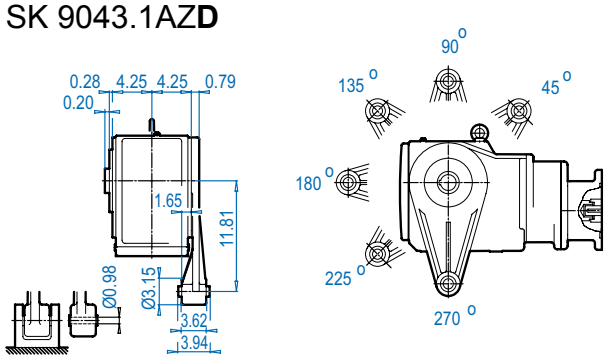

SK 9043.1AZ**B** ⇨🕮 574

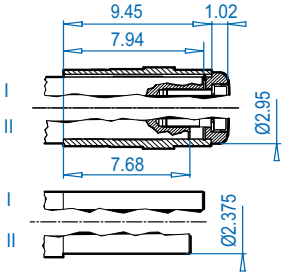

SK 9043.1AZ**S** ⇨🕮 571

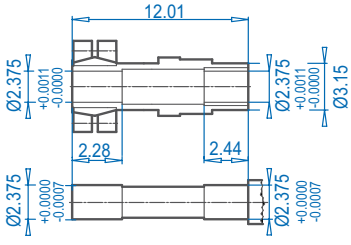

SK 9043.1AZ**SH**

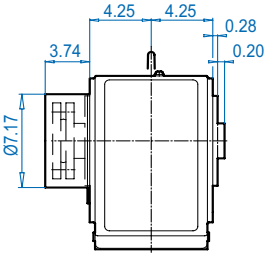

ALTERNATE SHAFTS SEE PAGES 566 - 573

NEMA Dimensions

Type	AJ1	AK1	BB1	BD1	BF1	U1	V1	UY1	Y1	C1	CC
56C	5.88	4.500	0.18	6.54	0.43	0.625	2.06	0.71	0.188	23.11	460
140TC	5.88	4.500	0.18	6.54	0.43	0.875	2.12	0.96	0.188	23.11	4.60
180 TC	7.25	8.500	0.23	9.17	0.59	1.125	2.62	1.24	0.250	25.11	6.60

Send Quote Requests to info@automatedpt.com
Call +1(800)985-6929 To Order or Order Online At Nordgearmotors.com

SK 9052.1 + Motor




DRIVESYSTEMS

SK 9052.1

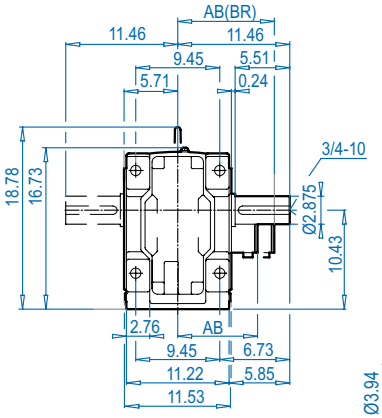

SK 9052.1AX

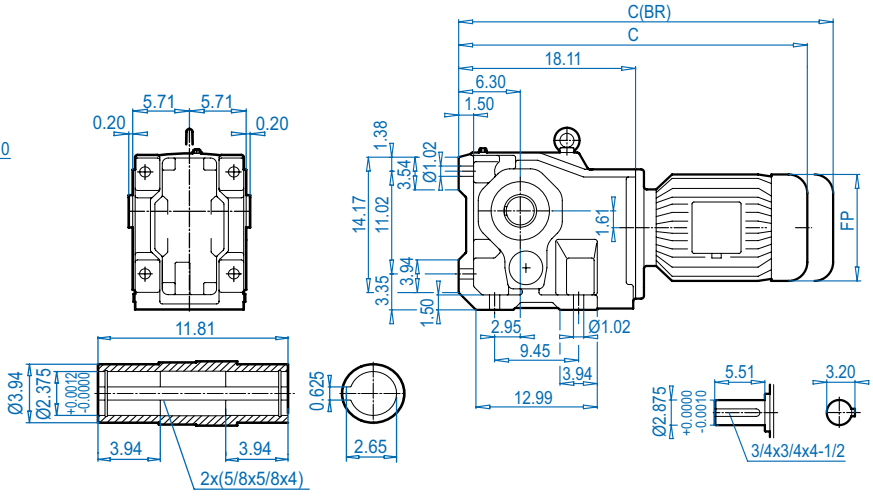

SK 9052.1VF

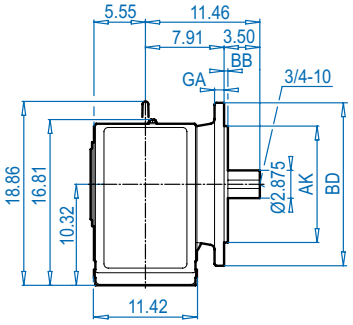

SK 9052.1AF

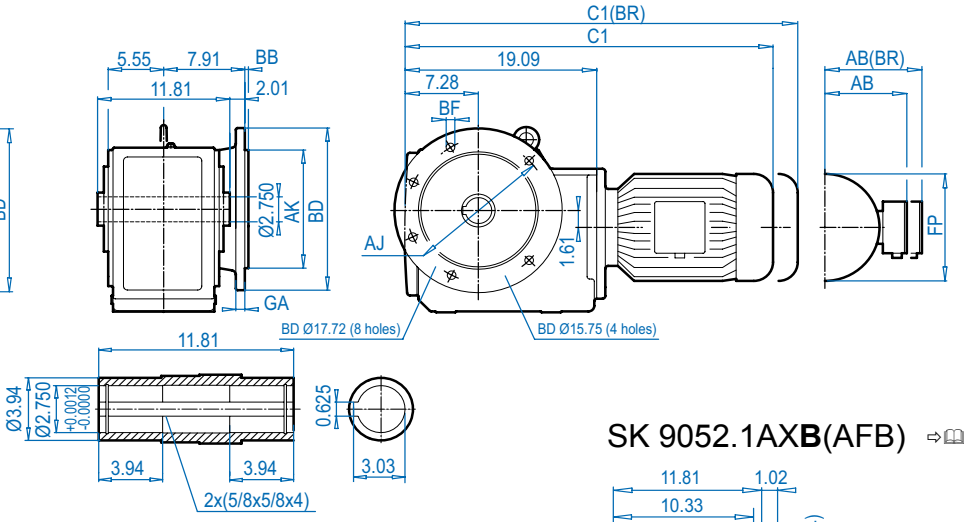

SK 9052.1AX**B**(AFB) ⇨📖 574

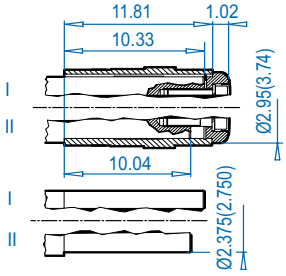

Mounting flange

BD (mm)	AJ	AK	BB	BF	GA
15.75 (400)	13.78	11.811 + 0.0000 - 0.0014	0.20	0.69	0.79
17.72 (450)	15.75	13.780 + 0.0000 - 0.0014	0.20	0.69	0.87

Motor dimensions

Standard eff.	90S/L	100L		132S/M	160M/L		180MX/LX		For Other Connection Possibilities please see ⇨📖 555 & 557
Energy eff.	90SH/LH	100LH	112MH	132SH/MH	160MH	160LH		180MH/LH	
AB	5.79	6.65	7.05	8.03	8.90	8.90	10.20	10.20	
AB (BR)	5.83	6.26	6.69	7.72	8.90	8.90	10.20	10.20	
C1	30.04	31.22	32.13	35.51	37.91	37.91	42.79	42.79	
C1 (BR)	32.99	34.80	35.79	39.72	44.49	44.49	46.92	46.92	
C	28.98	30.16	31.06	34.45	36.93	36.93	41.81	41.81	
C (BR)	31.93	33.74	34.72	38.66	43.51	43.51	45.94	45.94	
FP	7.20	7.91	8.98	10.47	12.60	12.60	14.09	14.09	

(BR) denotes Brakemotor

Send Quote Requests to info@automatedpt.com
Call +1(800)985-6929 To Order or Order Online At Nordgearmotors.com

DRIVESYSTEMS



SK 9052.1 + Motor

SK 9052.1AZ

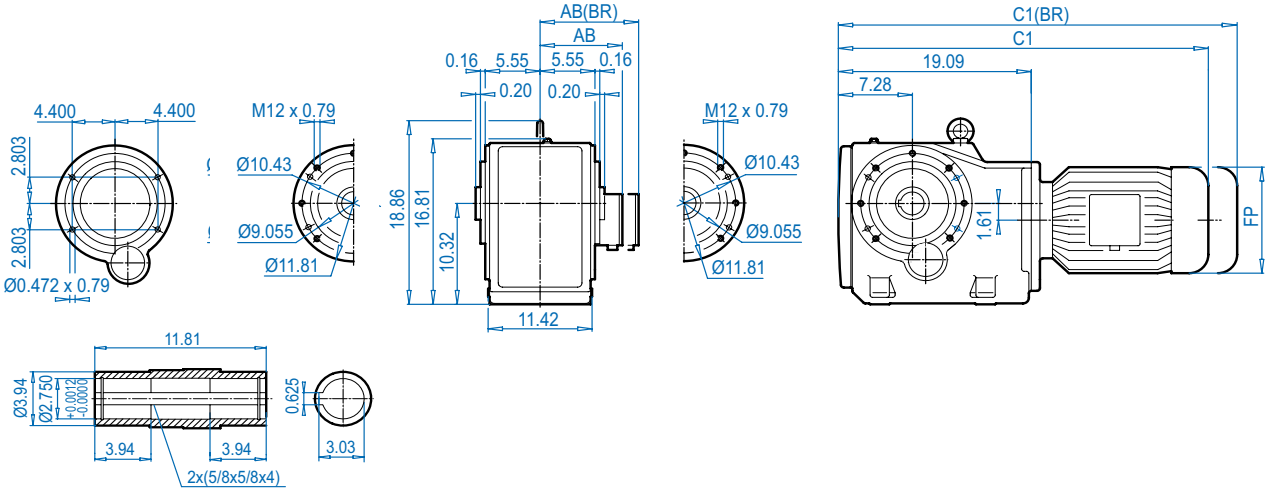

SK 9052.1AZ**K**

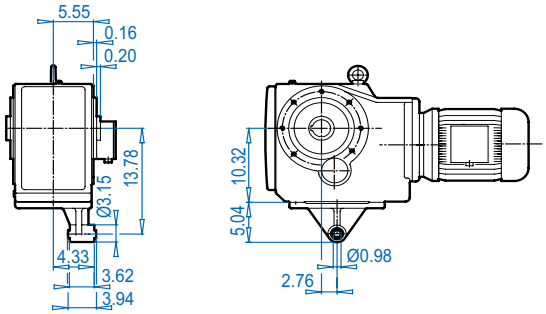

SK 9052.1AZ**D**

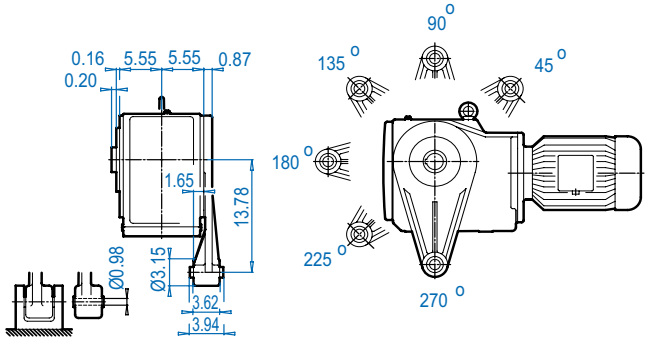

SK 9052.1AZ**B** ⇨🕮 574

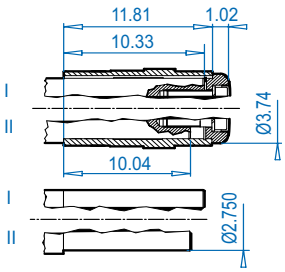

SK 9052.1AZ**S** ⇨🕮 571

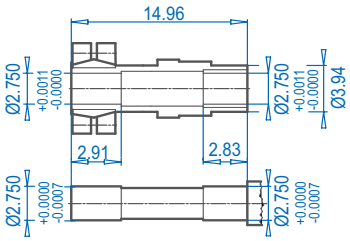

SK 9052.1AZ**SH**

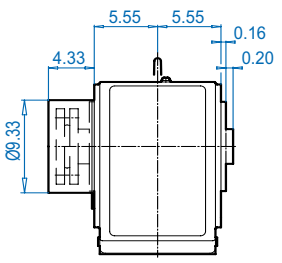

Motor dimensions

Standard eff.	90S/L	100L		132S/M	160M/L		180MX/LX		For Other Connection Possibilities please see ⇨🕮 555 & 557
Energy eff.	90SH/LH	100LH	112MH	132SH/MH	160MH	160LH		180MH/LH	
AB	5.79	6.65	7.05	8.03	8.90	8.90	10.20	10.20	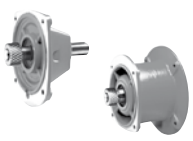
AB (BR)	5.83	6.26	6.69	7.72	8.90	8.90	10.20	10.20	
C1	30.04	31.22	32.13	35.51	37.91	37.91	42.79	42.79	
C1 (BR)	32.99	34.80	35.79	39.72	44.49	44.49	46.92	46.92	
FP	7.20	7.91	8.98	10.47	12.60	12.60	14.09	14.09	

(BR) denotes Brakemotor

Dimensions in Inches
DIMENSIONS
ALTERNATE SHAFTS SEE PAGES 566 - 573

Send Quote Requests to info@automatedpt.com
Call +1(800)985-6929 To Order or Order Online At Nordgearmotors.com

SK 9052.1 + NEMA




SK 9052.1

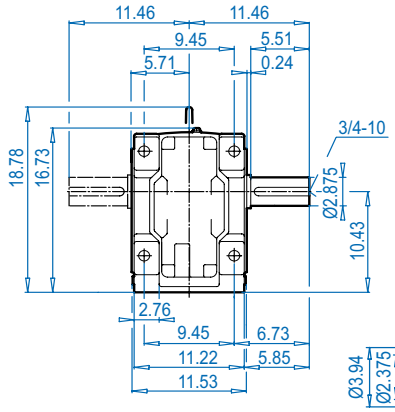

SK 9052.1AX

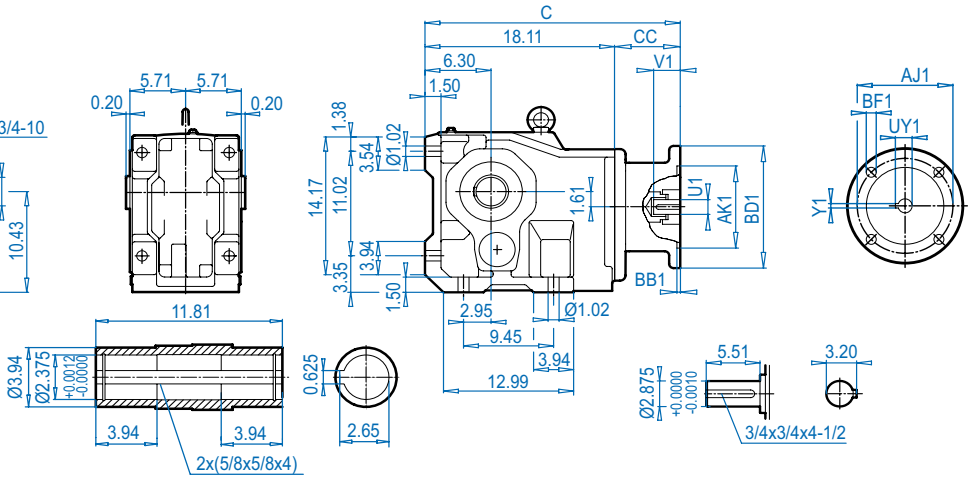

NEMA Input

DIMENSIONS — Dimensions in Inches

SK 9052.1VF

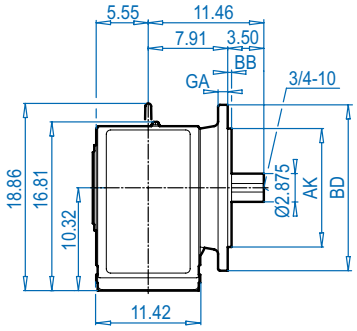

SK 9052.1AF

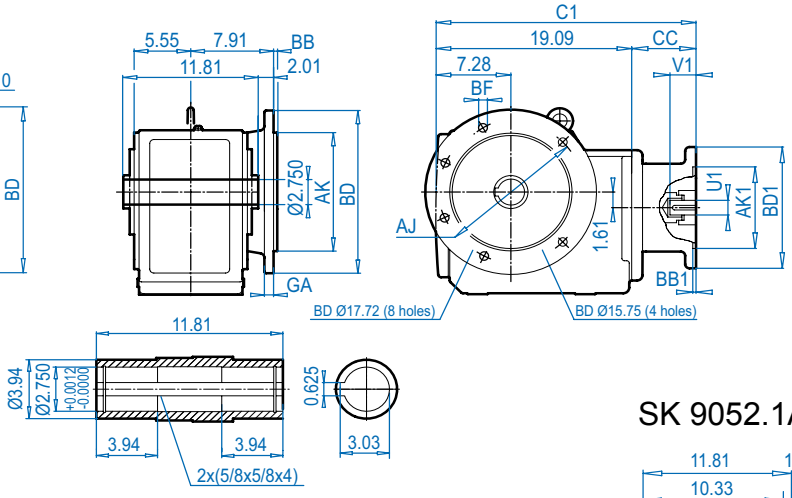

ALTERNATE SHAFTS SEE PAGES 566 - 573

SK 9052.1AX**B**(AFB) ⇨🕮 574

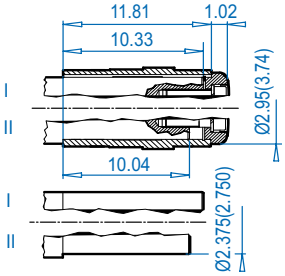

Mounting flange

BD (mm)	AJ	AK	BB	BF	GA
15.75 (400)	13.78	11.811 + 0.0000 - 0.0014	0.20	0.69	0.79
17.72 (450)	15.75	13.780 + 0.0000 - 0.0014	0.20	0.69	0.87

NEMA Dimensions

Type	AJ1	AK1	BB1	BD1	BF1	U1	V1	UY1	Y1	C	C1	CC
56C	5.88	4.500	0.18	6.54	0.43	0.625	2.06	0.71	0.188	22.41	23.39	4.30
140TC	5.88	4.500	0.18	6.54	0.43	0.875	2.12	0.96	0.188	22.41	23.39	4.30
180TC	7.25	8.500	0.23	9.17	0.59	1.125	2.62	1.24	0.250	26.01	26.99	7.90
210TC	7.25	8.500	0.23	9.17	0.59	1.375	3.12	1.52	0.312	26.01	26.99	7.90
250TC	7.25	8.500	0.23	9.17	0.59	1.625	3.75	1.80	0.375	26.01	26.99	7.90
280TC	9.00	10.500	0.23	13.78	0.59	1.875	4.38	2.10	0.500	26.42	27.40	8.31

Send Quote Requests to info@automatedpt.com
Call +1(800)985-6929 To Order or Order Online At Nordgearmotors.com

DRIVESYSTEMS





SK 9052.1 + NEMA

SK 9052.1AZ

NEMA Input

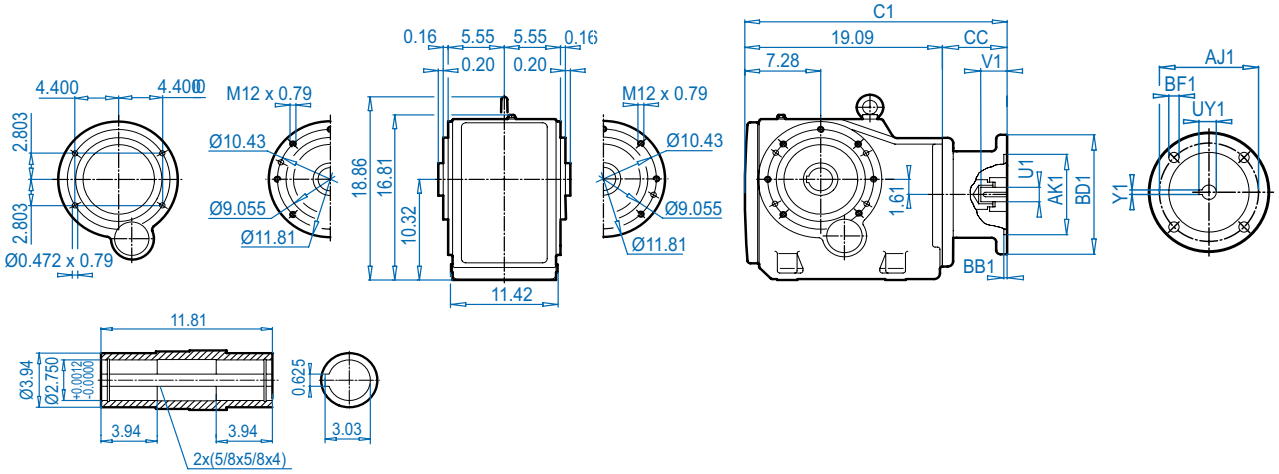

Dimensions in Inches
DIMENSIONS

SK 9052.1AZ**K**

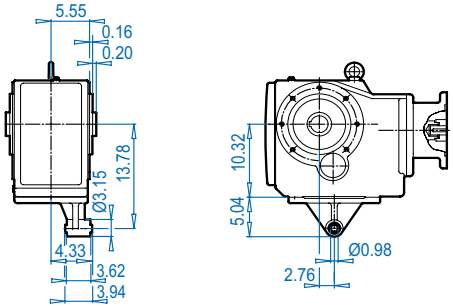

SK 9052.1AZ**D**

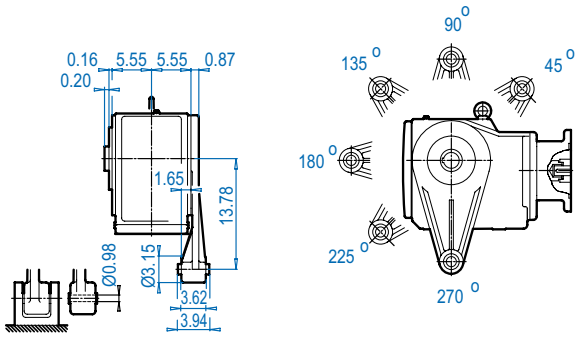

SK 9052.1AZ**B** ⇨🕮 574

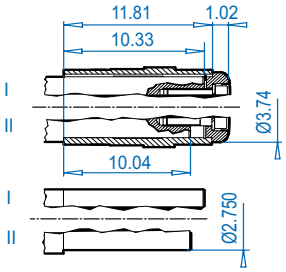

SK 9052.1AZ**S** ⇨🕮 571

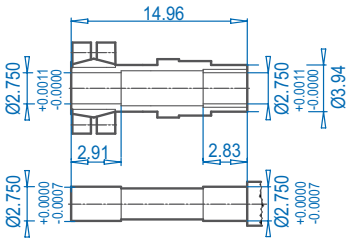

SK 9052.1AZ**SH**

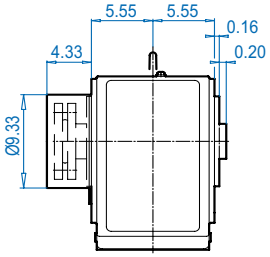

ALTERNATE SHAFTS SEE PAGES 566 - 573

NEMA Dimensions

Type	AJ1	AK1	BB1	BD1	BF1	U1	V1	UY1	Y1	C1	CC
56C	5.88	4.500	0.18	6.54	0.43	0.625	2.06	0.71	0.188	23.39	4.30
140TC	5.88	4.500	0.18	6.54	0.43	0.875	2.12	0.96	0.188	23.39	4.30
180TC	7.25	8.500	0.23	9.17	0.59	1.125	2.62	1.24	0.250	26.99	7.90
210TC	7.25	8.500	0.23	9.17	0.59	1.375	3.12	1.52	0.312	26.99	7.90
250TC	7.25	8.500	0.23	9.17	0.59	1.625	3.75	1.80	0.375	26.99	7.90
280TC	9.00	10.500	0.23	13.78	0.59	1.875	4.38	2.10	0.500	27.40	8.31

Send Quote Requests to info@automatedpt.com
Call +1(800)985-6929 To Order or Order Online At Nordgearmotors.com

SK 9053.1 + Motor




DRIVESYSTEMS

SK 9053.1

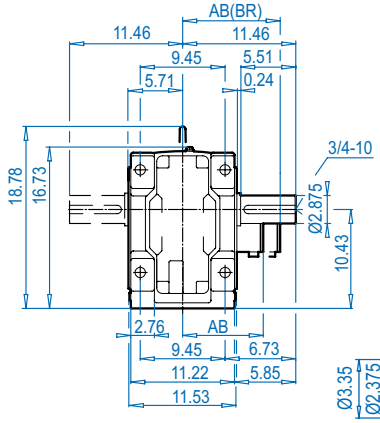

SK 9053.1AX

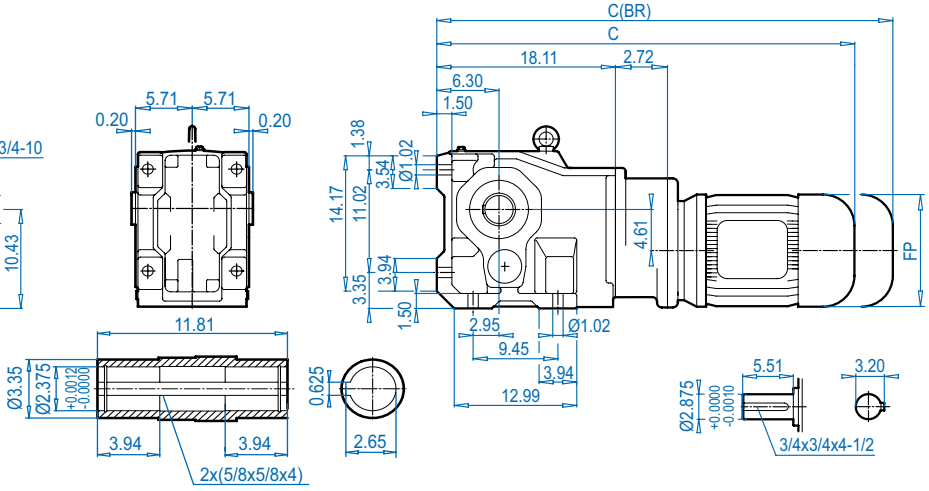

SK 9053.1VF

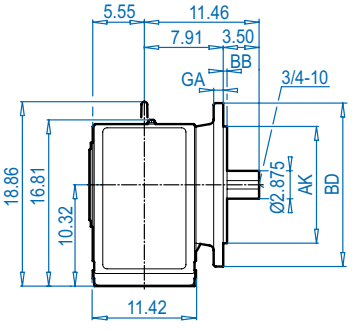

SK 9053.1AF

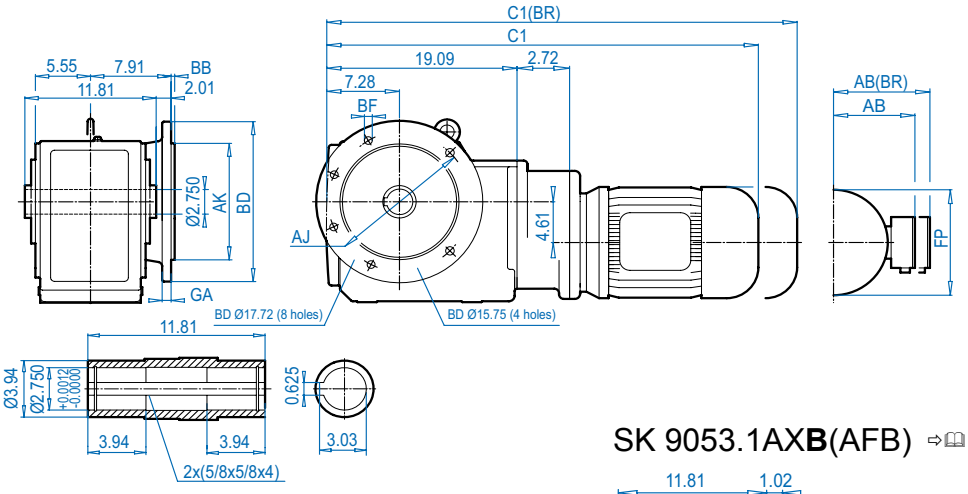

SK 9053.1AX**B**(AFB) ⇨🕮 574

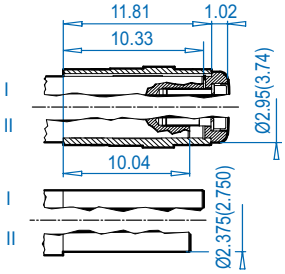

Mounting flange

BD (mm)	AJ	AK	BB	BF	GA
15.75 (400)	13.78	11.811 $^{+\ 0.0000}_{-\ 0.0014}$	0.20	069	0.79
17.72 (450)	15.75	13.780 $^{+\ 0.0000}_{-\ 0.0014}$	0.20	0.69	0.87

Motor dimensions

Standard efficiency	71S/L	80S/L	90S/L	100L			For Other Connection Possibilities please see ⇨🕮 555 & 557
Energy efficiency		80LH	90SH/LH	100LH			
AB	4.88	5.59	5.79	6.65			
AB (BR)	5.24	5.63	5.83	6.26			
C1	30.95	31.93	33.54	34.72			
C1 (BR)	33.23	34.45	36.50	38.31			
C	29.88	30.87	32.48	33.66			
C (BR)	32.17	33.39	35.43	37.24			
FP	5.71	6.50	7.20	7.91			

(BR) denotes Brakemotor

DIMENSIONS Dimensions in Inches
ALTERNATE SHAFTS SEE PAGES 566 - 573

Send Quote Requests to info@automatedpt.com
Call +1(800)985-6929 To Order or Order Online At Nordgearmotors.com



SK 9053.1 + Motor

SK 9053.1AZ

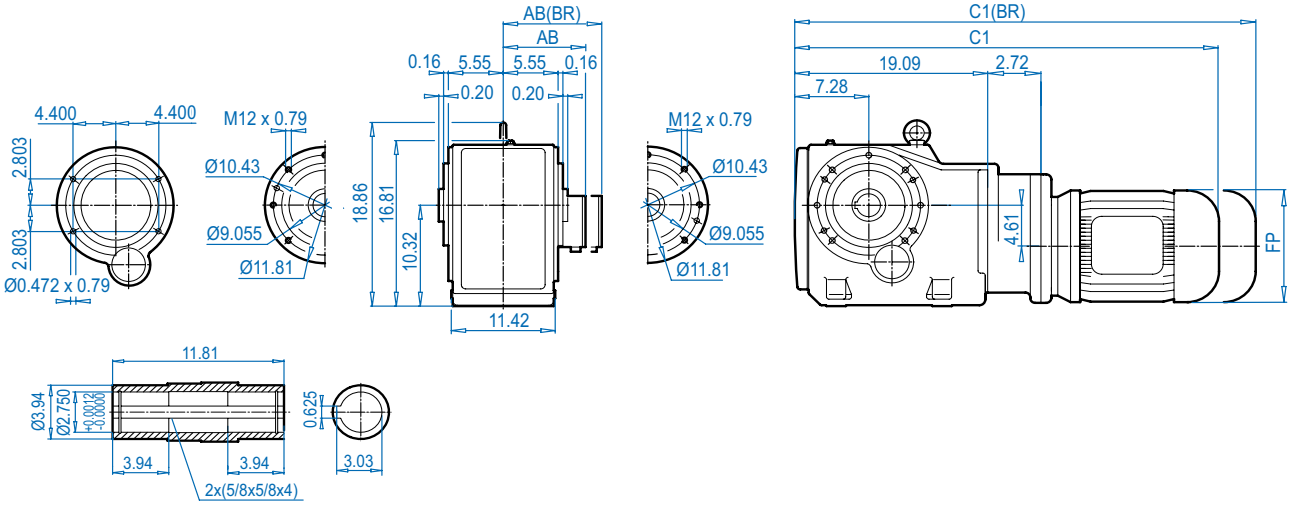

SK 9053.1AZ**K**

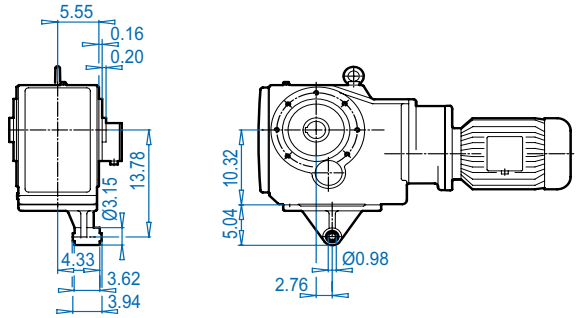

SK 9053.1AZ**D**

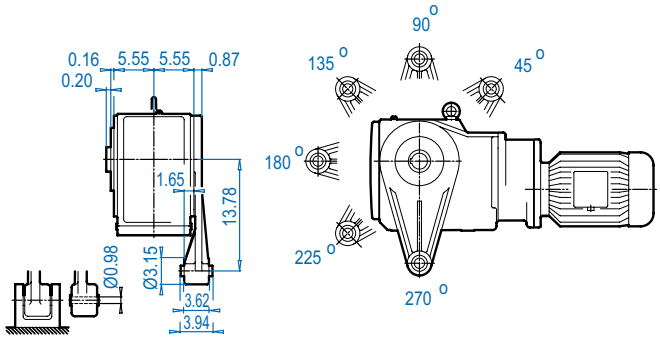

SK 9053.1AZ**B** ⇨📖 574

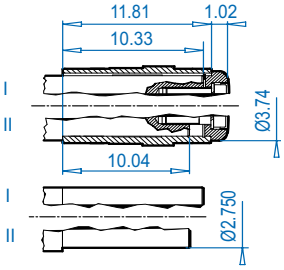

SK 9053.1AZ**S** ⇨📖 571

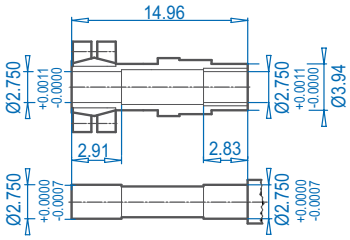

SK 9053.1AZ**SH**

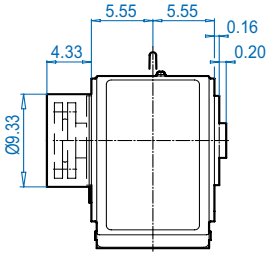

Motor dimensions

Standard efficiency	71S/L	80S/L	90S/L	100L			For Other Connection Possibilities please see ⇨📖 555 & 557
Energy efficiency		80LH	90SH/LH	100LH			
AB	4.88	5.59	5.79	6.65			
AB (BR)	5.24	5.63	5.83	6.26			
C1	30.95	31.93	33.54	34.72			
C1 (BR)	33.23	34.45	36.50	38.31			
FP	5.71	6.50	7.20	7.91			

(BR) denotes Brakemotor

Send Quote Requests to info@automatedpt.com
Call +1(800)985-6929 To Order or Order Online At Nordgearmotors.com

SK 9053.1 + NEMA




DRIVESYSTEMS

SK 9053.1

SK 9053.1AX

NEMA Input

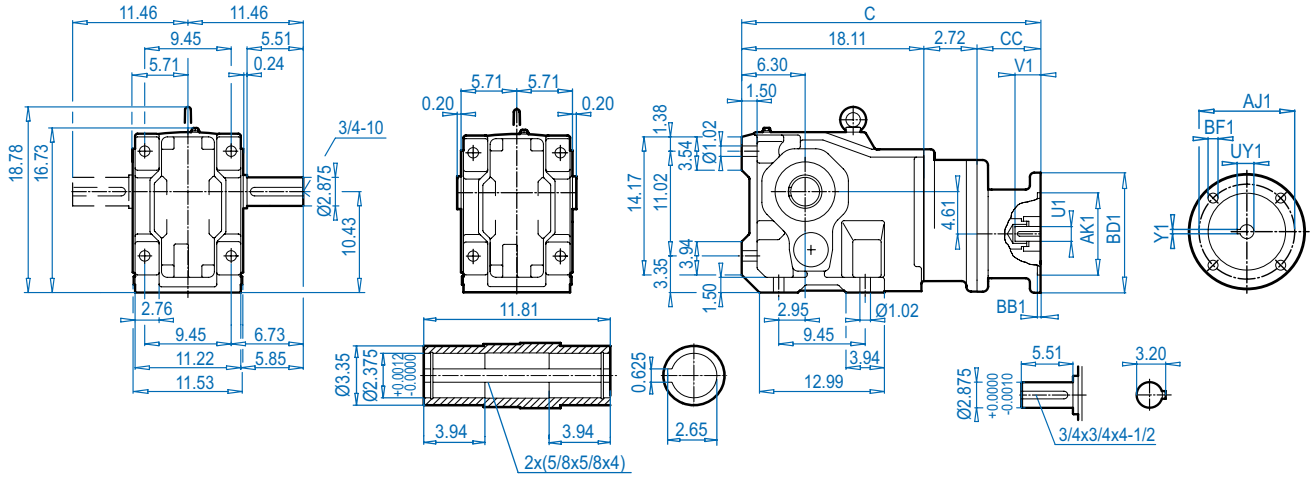

SK 9053.1VF

SK 9053.1AF

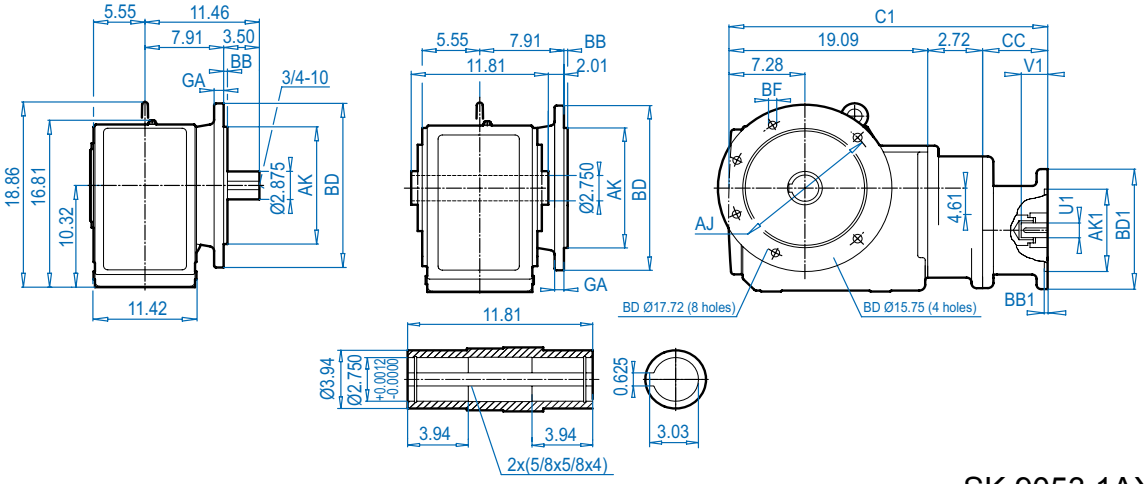

DIMENSIONS
Dimensions in Inches
ALTERNATE SHAFTS SEE PAGES 566 - 573

SK 9053.1AX**B**(AFB) ⇨🕮 574

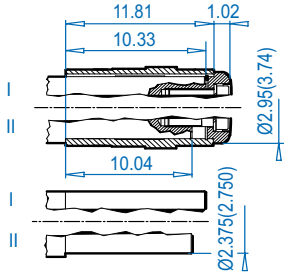

Mounting flange

BD (mm)	AJ	AK	BB	BF	GA
15.75 (400)	13.78	11.811 $^{+\ 0.0000}_{-\ 0.0014}$	0.20	0.69	0.79
17.72 (450)	15.75	13.780 $^{+\ 0.0000}_{-\ 0.0014}$	0.20	0.69	0.87

NEMA Dimensions

Type	AJ1	AK1	BB1	BD1	BF1	U1	V1	UY1	Y1	C	C1	CC
56C	5.88	4.500	0.18	6.54	0.43	0.625	2.06	0.71	0.188	25.43	26.41	4.60
140TC	5.88	4.500	0.18	6.54	0.43	0.875	2.12	0.96	0.188	25.43	26.41	4.60
180 TC	7.25	8.500	0.23	9.17	0.59	1.125	2.62	1.24	0.250	27.43	28.41	6.60

Send Quote Requests to info@automatedpt.com
Call +1(800)985-6929 To Order or Order Online At Nordgearmotors.com

DRIVESYSTEMS

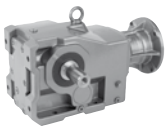



SK 9053.1 + NEMA

SK 9053.1AZ

NEMA Input

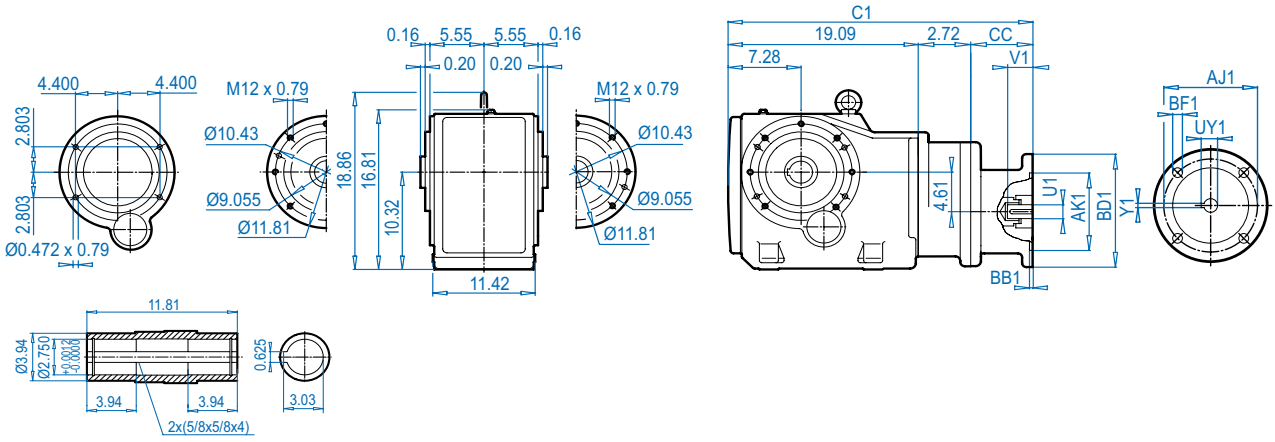

Dimensions in Inches
DIMENSIONS

SK 9053.1AZ**K**

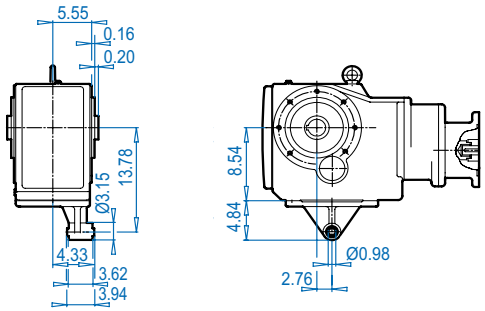

SK 9053.1AZ**D**

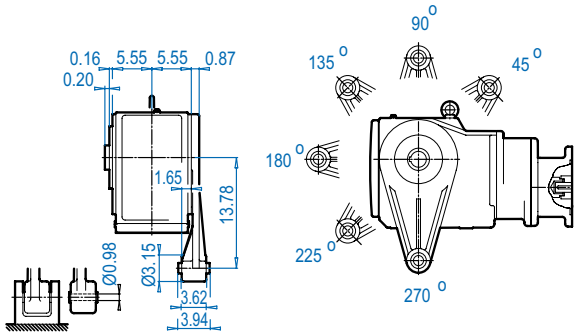

SK 9053.1AZ**B** ⇨🕮 574

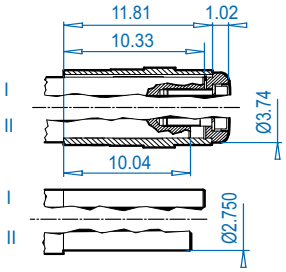

SK 9053.1AZ**S** ⇨🕮 571

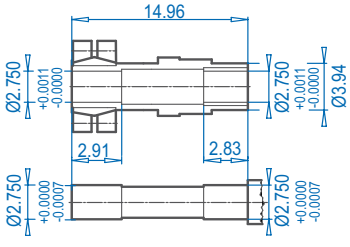

SK 9053.1AZ**SH**

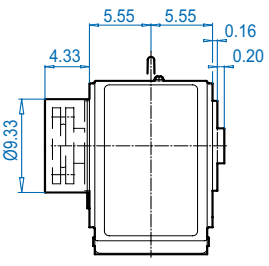

ALTERNATE SHAFTS SEE PAGES 566 - 573

NEMA Dimensions

Type	AJ1	AK1	BB1	BD1	BF1	U1	V1	UY1	Y1	C1	CC
56C	5.88	4.500	0.18	6.54	0.43	0.625	2.06	0.71	0.188	26.41	4.60
140TC	5.88	4.500	0.18	6.54	0.43	0.875	2.12	0.96	0.188	26.41	4.60
180 TC	7.25	8.500	0.23	9.17	0.59	1.125	2.62	1.24	0.250	28.41	6.60

Send Quote Requests to info@automatedpt.com
Call +1(800)985-6929 To Order or Order Online At Nordgearmotors.com

SK 9072.1 + Motor




DRIVESYSTEMS

SK 9072.1

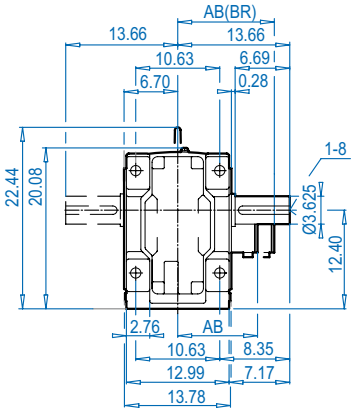

SK 9072.1AX

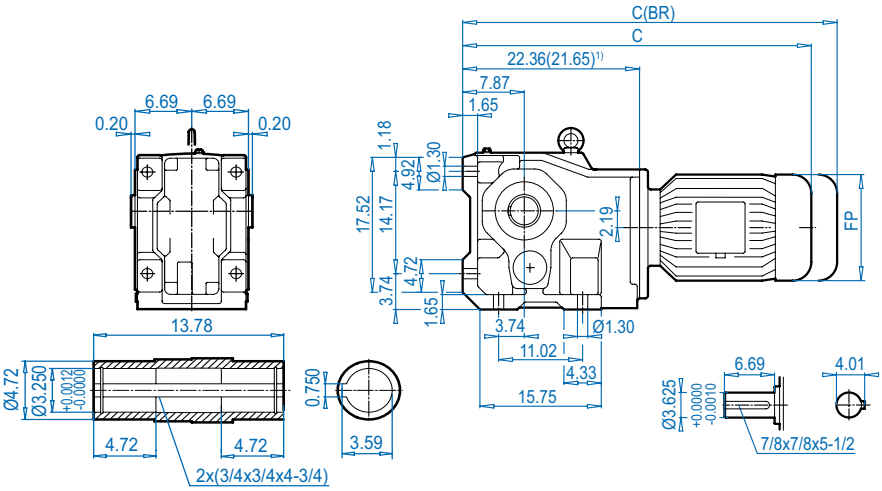

SK 9072.1VF

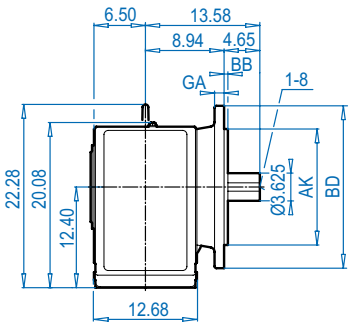

SK 9072.1AF

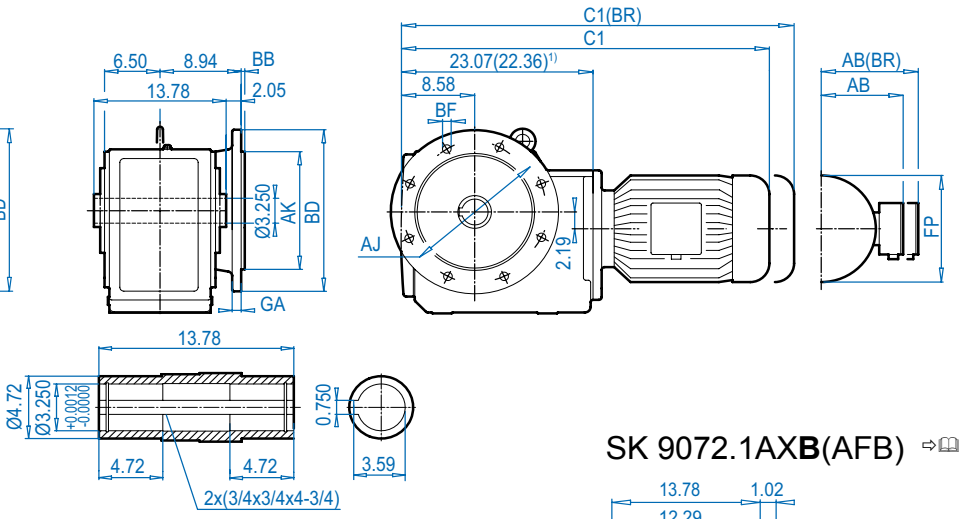

SK 9072.1AX**B**(AFB) ⇨📖 574

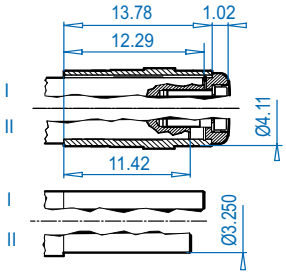

Mounting flange

BD (mm)	AJ	AK	BB	BF	GA
17.72 (450)	15.75	13.780 $^{+0.0000}_{-0.0014}$	0.20	0.71	0.87
21.65 (550)	19.69	17.717 $^{+0.0000}_{-0.0014}$	0.20	0.71	1.10

Motor dimensions

Standard eff.	100L		132S/M	160M/L[1)]		180MX/LX[1)]		200L[1)]	225S/M[1)]		For Other Connection Possibilities please see ⇨📖 555 & 557
Energy eff.	100LH	112MH	132SH/MH	160MH[1)]	160LH[1)]		180MH/LH[1)]	200LH[1)]		225SH/MH[1)]	
AB	6.65	7.05	8.03	8.90	8.90	10.20	10.20	12.05	12.05	13.19	
AB (BR)	6.26	6.69	7.72	8.90	8.90	10.20	10.20	12.05	12.05	-	
C1	35.12	35.91	40.20	41.89	41.89	46.77	46.77	49.45	49.45	50.43	
C1 (BR)	38.70	39.57	44.41	48.47	48.47	50.90	50.90	56.02	56.02	-	
C	34.41	35.20	39.49	41.18	41.18	46.06	46.06	48.74	48.74	49.72	
C (BR)	37.99	38.86	43.70	47.05	47.05	50.19	50.19	55.31	55.31	-	
FP	7.91	8.98	10.47	12.60	12.60	14.09	14.09	15.67	15.67	18.50	

(BR) denotes Brakemotor

DIMENSIONS
Dimensions in Inches
ALTERNATE SHAFTS SEE PAGES 566 - 573

Send Quote Requests to info@automatedpt.com
Call +1(800)985-6929 To Order or Order Online At Nordgearmotors.com



SK 9072.1 + Motor

SK 9072.1AZ

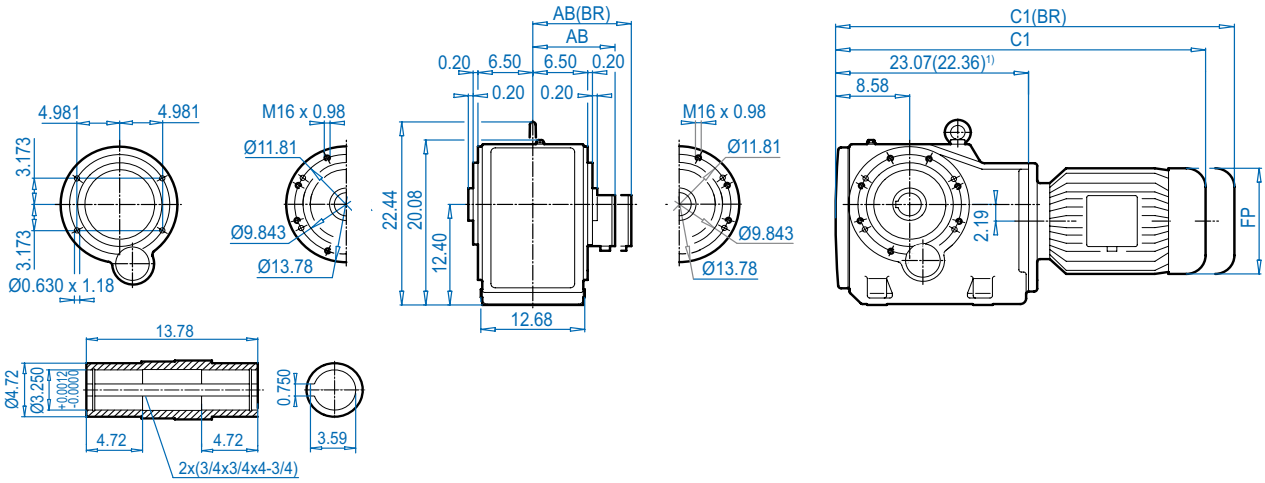

SK 9072.1AZ**K**

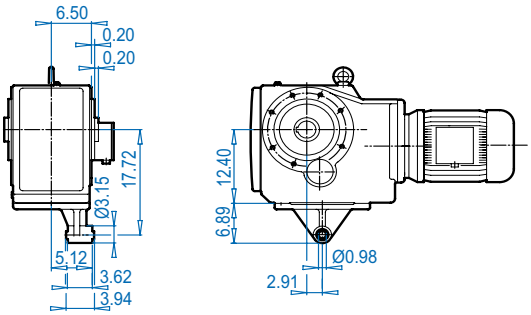

SK 9072.1AZ**D**

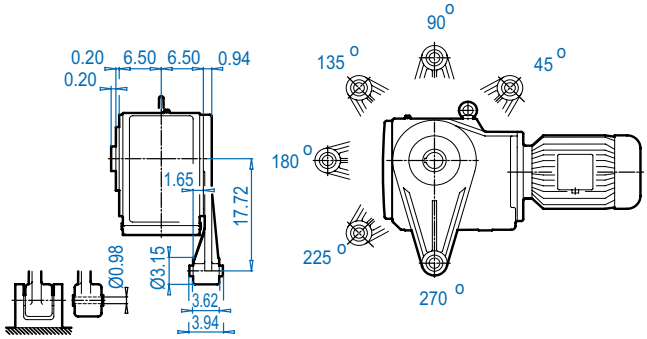

SK 9072.1AZ**B** ⇨🕮 574

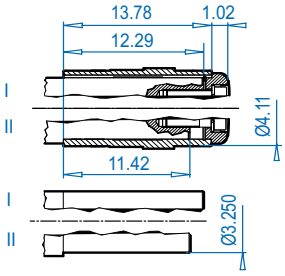

SK 9072.1AZ**S** ⇨🕮 571

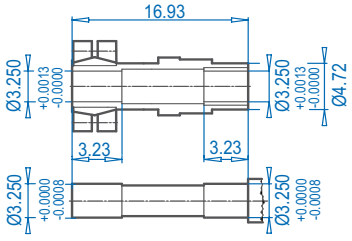

SK 9072.1AZ**SH**

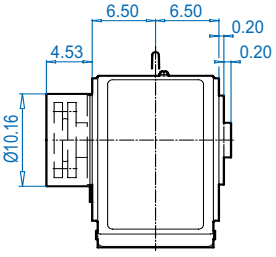

Motor dimensions

Standard eff.	100L		132S/M	160M/L[1]		180MX/LX[1]		200L[1]	225S/M[1]		For Other Connection Possibilities please see ⇨🕮 555 & 557
Energy eff.	100LH	112MH	132SH/MH	160MH[1]	160LH[1]		180MH/LH[1]	200LH[1]		225SH/MH[1]	
AB	6.65	7.05	8.03	8.90	8.90	10.20	10.20	12.05	12.05	13.19	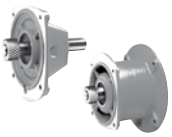
AB (BR)	6.26	6.69	7.72	8.90	8.90	10.20	10.20	12.05	12.05	-	
C1	35.12	35.91	40.20	41.89	41.89	46.77	46.77	49.45	49.45	50.43	
C1 (BR)	38.70	39.57	44.41	48.47	48.47	50.90	50.90	56.02	56.02	-	
FP	7.91	8.98	10.47	12.60	12.60	14.09	14.09	15.67	15.67	18.50	

(BR) denotes Brakemotor

Dimensions in Inches DIMENSIONS
ALTERNATE SHAFTS SEE PAGES 566 - 573

Send Quote Requests to info@automatedpt.com
Call +1(800)985-6929 To Order or Order Online At Nordgearmotors.com

SK 9072.1 + NEMA




SK 9072.1

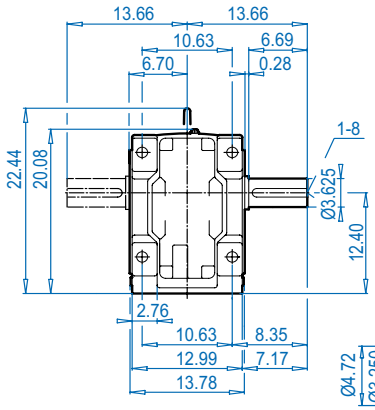

SK 9072.1AX

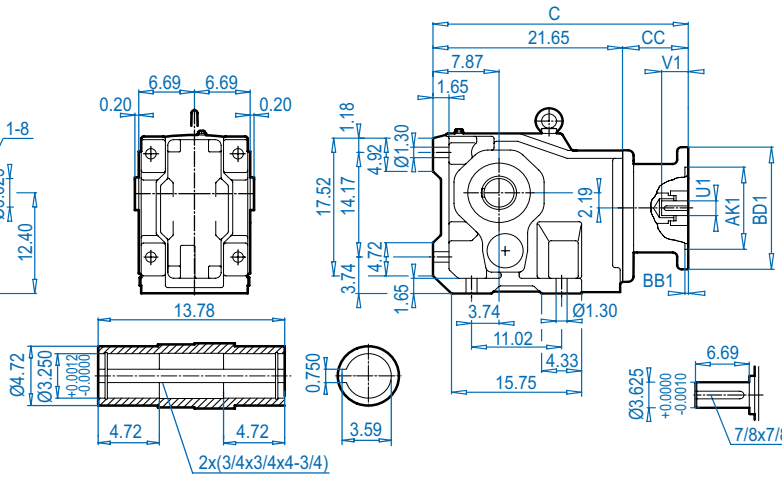

NEMA Input

SK 9072.1VF

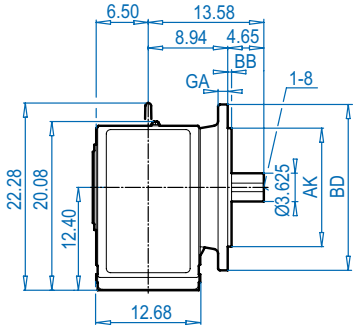

SK 9072.1AF

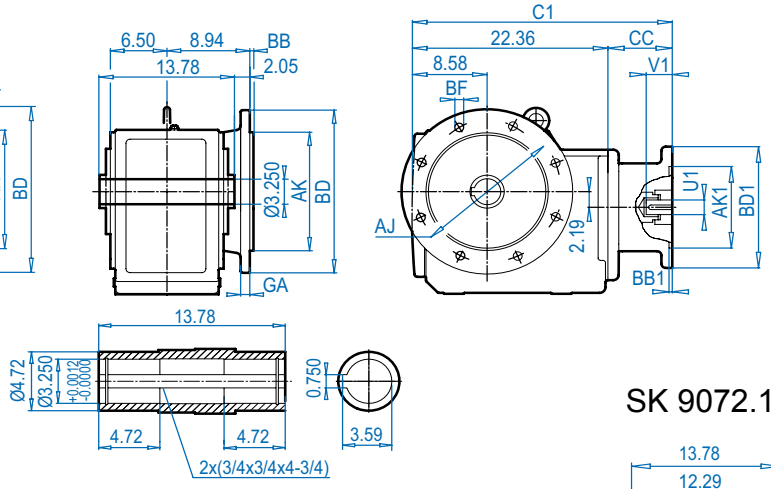

SK 9072.1AX**B**(AFB) ⇨🕮 574

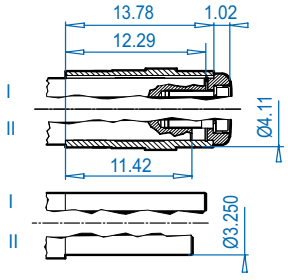

Mounting flange

BD (mm)	AJ	AK	BB	BF	GA
17.72 (450)	15.75	13.780 $^{+0.0000}_{-0.0014}$	0.20	0.71	0.87
21.65 (550)	19.69	17.717 $^{+0.0000}_{-0.0014}$	0.20	0.71	1.10

NEMA Dimensions

Type	AJ1	AK1	BB1	BD1	BF1	U1	V1	UY1	Y1	C	C1	CC
180TC	7.25	8.500	0.23	9.17	0.59	1.125	2.62	1.24	0.250	29.17	28.48	7.52
210TC	7.25	8.500	0.23	9.17	0.59	1.375	3.12	1.52	0.312	29.17	28.48	7.52
250TC	7.25	8.500	0.23	9.17	0.59	1.625	3.75	1.80	0.375	33.03	32.36	11.38
280TC	9.00	10.500	0.23	13.78	0.59	1.875	4.38	2.10	0.500	33.03	32.36	11.38
320TC	11.00	12.500	0.24	15.75	0.75	2.125	5.00	2.35	0.500	32.00	31.33	10.35
360TC	11.00	12.500	0.24	17.71	0.75	2.375	5.62	2.65	0.625	34.92	34.25	13.27

DIMENSIONS
Dimensions in Inches
ALTERNATE SHAFTS SEE PAGES 566 - 573

Send Quote Requests to info@automatedpt.com
Call +1(800)985-6929 To Order or Order Online At Nordgearmotors.com




SK 9072.1 + NEMA

SK 9072.1AZ

NEMA Input

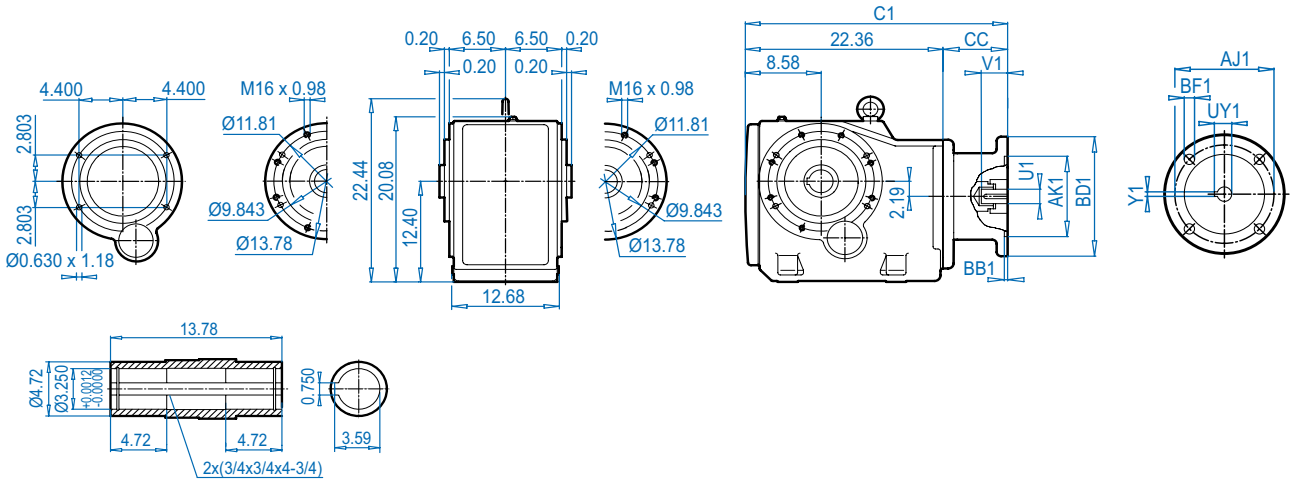

SK 9072.1AZ**K**

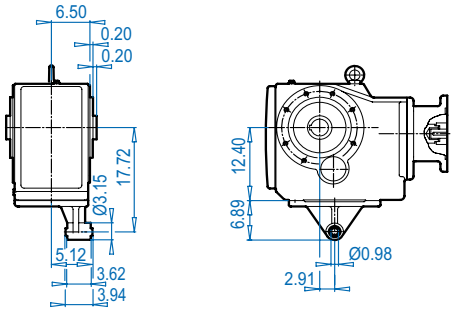

SK 9072.1AZ**D**

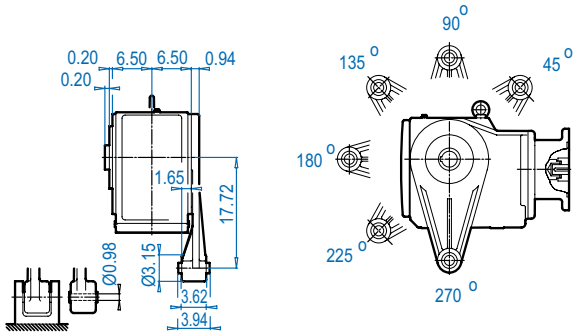

SK 9072.1AZ**B** ⇨🕮 574

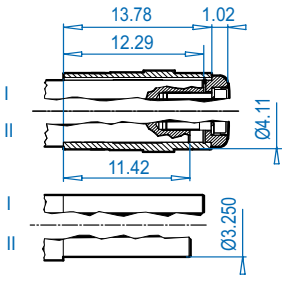

SK 9072.1AZ**S** ⇨🕮 571

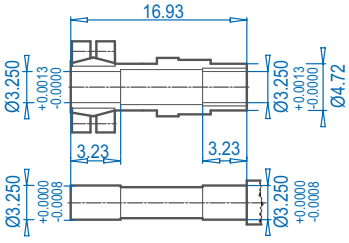

SK 9072.1AZ**SH**

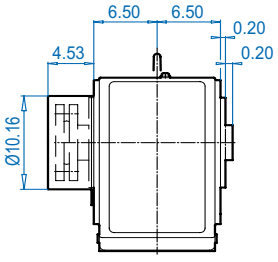

NEMA Dimensions

Type	AJ1	AK1	BB1	BD1	BF1	U1	V1	UY1	Y1	C1	CC
180TC	7.25	8.500	0.23	9.17	0.59	1.125	2.62	1.24	0.250	29.86	7.50
210TC	7.25	8.500	0.23	9.17	0.59	1.375	3.12	1.52	0.312	29.86	7.50
250TC	7.25	8.500	0.23	9.17	0.59	1.625	3.75	1.80	0.375	32.36	11.38
280TC	9.00	10.500	0.23	13.78	0.59	1.875	4.38	2.10	0.500	32.36	11.38
320TC	11.00	12.500	0.24	15.75	0.75	2.125	5.00	2.35	0.500	31.33	10.35
360TC	11.00	12.500	0.24	17.71	0.75	2.375	5.62	2.65	0.625	34.25	13.27

Send Quote Requests to info@automatedpt.com
Call +1(800)985-6929 To Order or Order Online At Nordgearmotors.com

SK 9082.1 + Motor




DRIVESYSTEMS

SK 9082.1

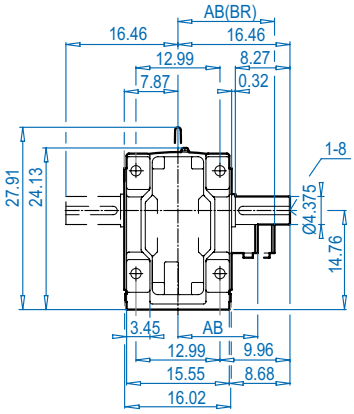

SK 9082.1AX

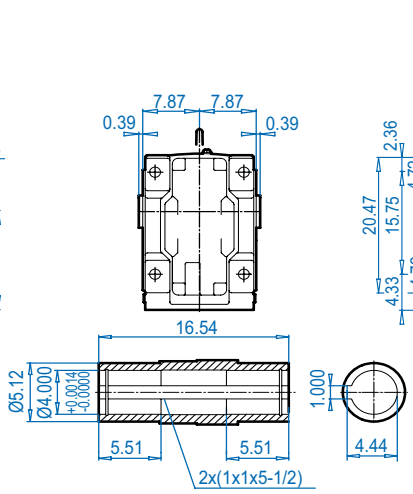

SK 9082.1VF

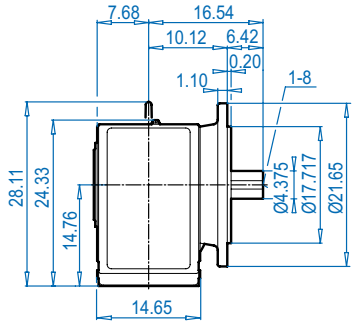

SK 9082.1AF

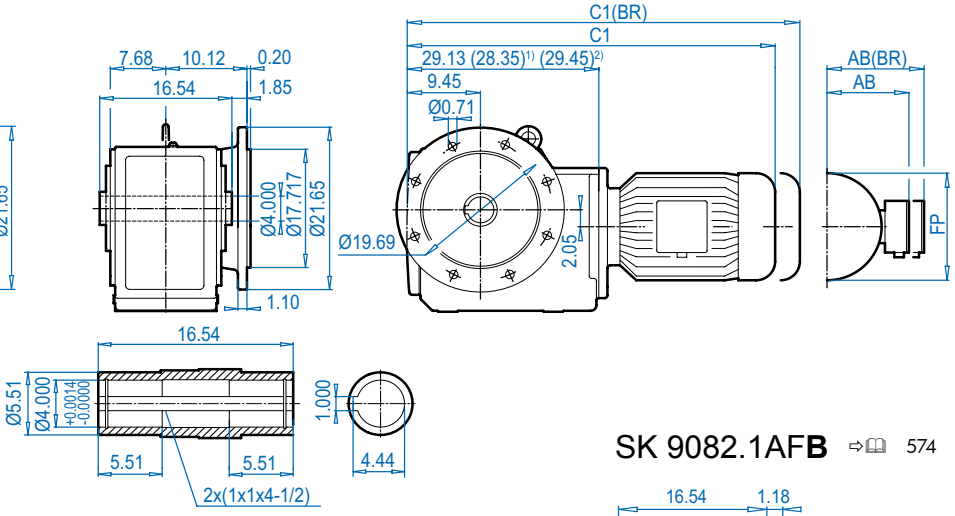

SK 9082.1AX**B** ⇨🕮 574

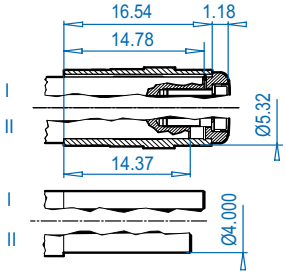

SK 9082.1AF**B** ⇨🕮 574

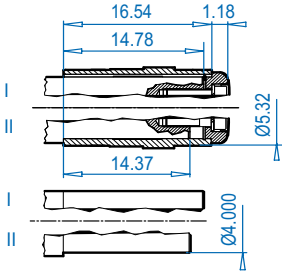

Motor dimensions

Standard eff.	132S/M	160M/L		180MX/LX		200L	225S/M		250M[1)]	280S[1)]	280M[2)]	For Other Connection Possibilities please see ⇨🕮 555 & 557
Energy eff.	132SH/MH	160MH	160LH		180MH/LH	200LH		225SH/MH	250MH[1)]	280SH[1)]	280MH[2)]	
AB	8.03	8.90	9.53	10.20	10.20	12.05	12.05	13.19	15.43	17.01	17.01	
AB (BR)	7.72	8.90	9.53	10.20	10.20	12.05	12.05	-	15.43	17.01	17.01	
C1	46.26	47.95	48.50	52.83	52.83	56.22	56.22	56.49	58.27	61.02	61.73	
C1 (BR)	50.47	54.53	55.55	56.97	56.97	62.80	62.80	-	68.11	68.11	73.15	
C	45.67	47.36	47.91	52.24	52.24	55.63	55.63	55.90	57.68	60.43	61.14	
C (BR)	49.88	53.94	54.96	56.38	56.38	62.20	62.20	-	67.52	67.52	72.56	
FP	10.47	12.60	12.60	12.60	14.09	15.67	15.67	18.50	19.49	21.85	21.85	

(BR) denotes Brakemotor

Send Quote Requests to info@automatedpt.com
Call +1(800)985-6929 To Order or Order Online At Nordgearmotors.com

DRIVESYSTEMS



SK 9082.1 + Motor

SK 9082.1AZ

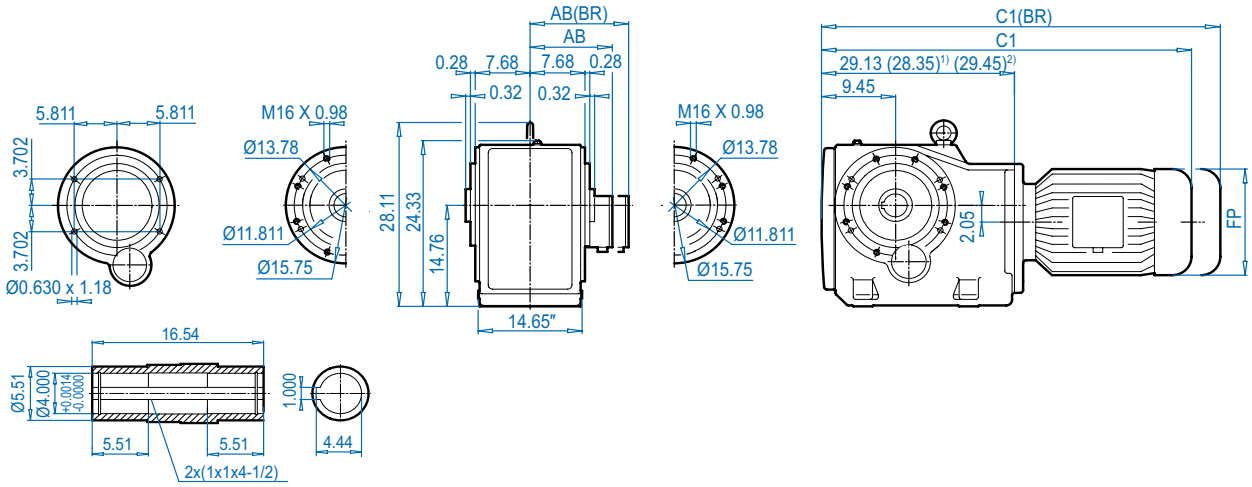

SK 9082.1AZ**K**

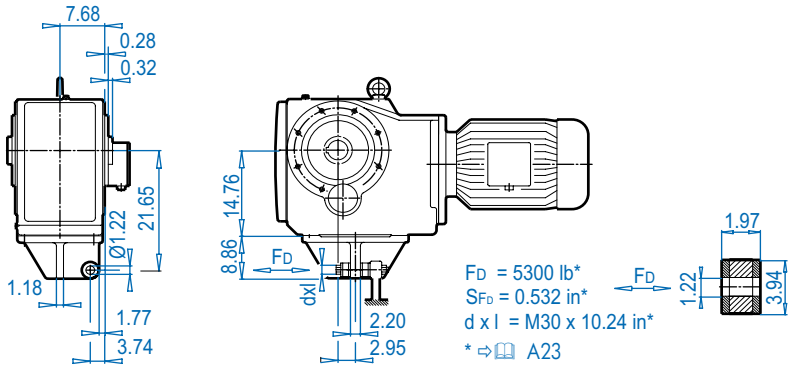

SK 9082.1AZ**B** ⇨ 574

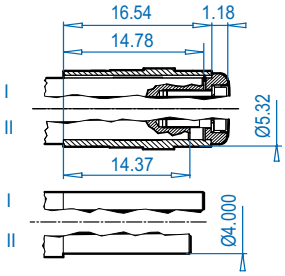

SK 9082.1AZ**S** ⇨ 571

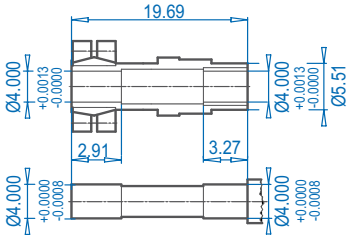

SK 9082.1AZ**SH**

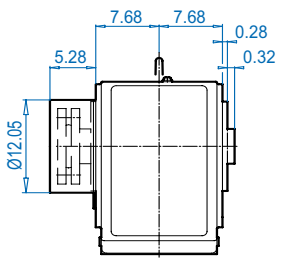

Motor dimensions

Standard eff.	132S/M	160M/L		180MX/LX		200L	225S/M		250M1)	280S1)	280M2)	For Other Connection Possibilities please see ⇨ 555 & 557
Energy eff.	132SH/MH	160MH	160LH		180MH/LH	200LH		225SH/MH	250MH1)	280SH1)	280MH2)	
AB	8.03	8.90	8.90	10.20	10.20	12.05	12.05	13.19	15.43	17.01	17.01	
AB (BR)	7.72	8.90	8.90	10.20	10.20	12.05	12.05	-	15.43	17.01	17.01	
C1	46.26	47.95	47.95	52.83	52.83	56.22	56.22	56.49	58.27	61.02	61.73	
C1 (BR)	50.47	54.53	54.53	56.97	56.97	62.80	62.80	-	68.11	68.11	73.15	
FP	10.47	12.60	12.60	12.60	14.09	15.67	15.67	18.50	19.49	21.85	21.85	

(BR) denotes Brakemotor

Dimensions in Inches
DIMENSIONS
ALTERNATE SHAFTS SEE PAGES 566 - 573

Send Quote Requests to info@automatedpt.com
Call +1(800)985-6929 To Order or Order Online At Nordgearmotors.com

SK 9082.1 + NEMA





DRIVESYSTEMS

SK 9082.1

SK 9082.1AX

NEMA Input

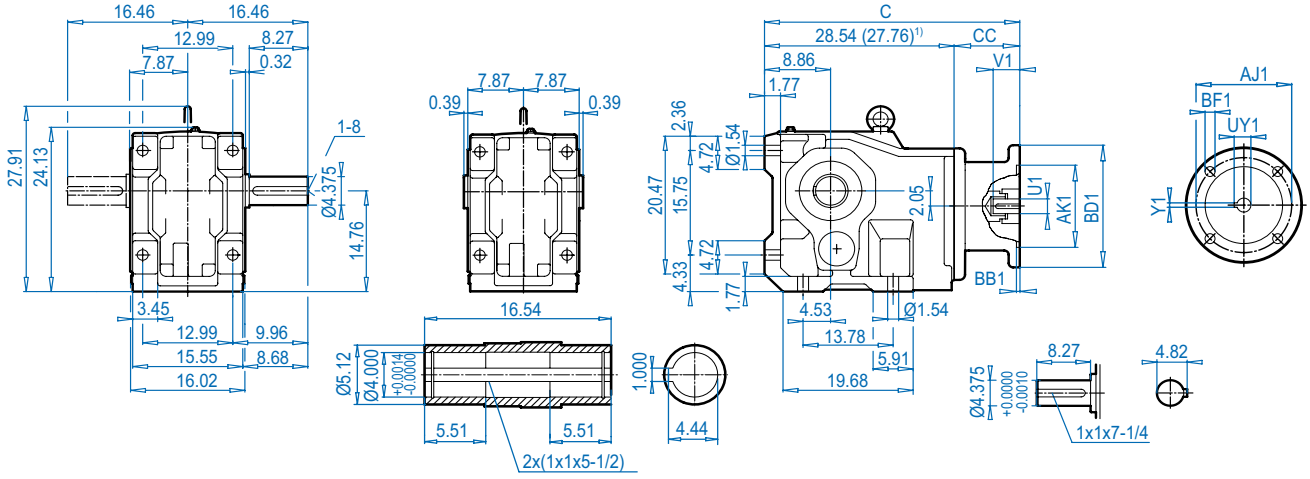

SK 9082.1VF

SK 9082.1AF

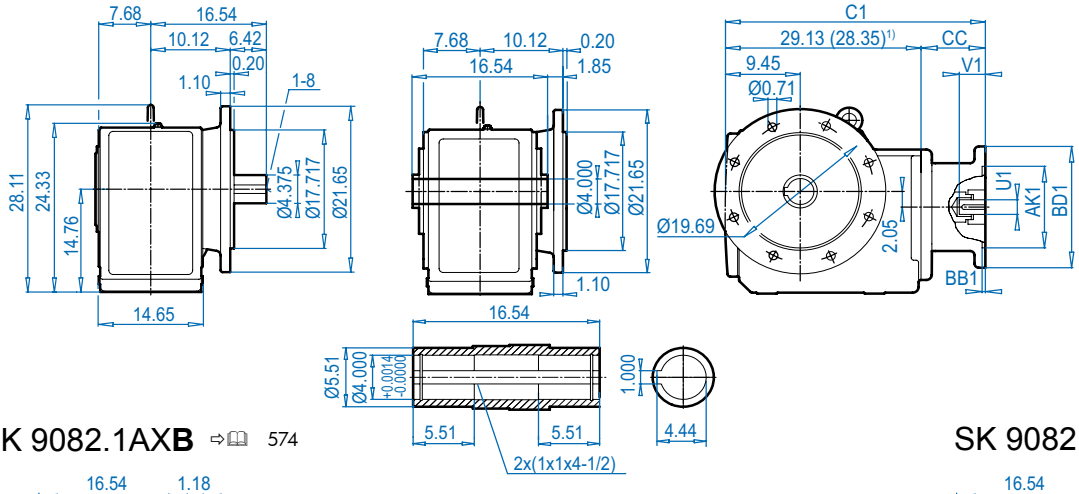

SK 9082.1AXB ⇨🕮 574

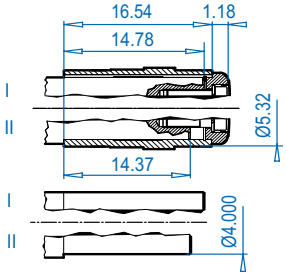

SK 9082.1AFB ⇨🕮 574

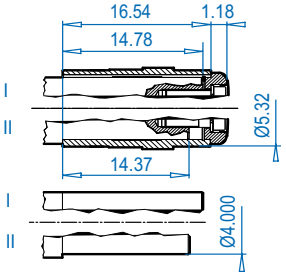

NEMA Dimensions

Type	AJ1	AK1	BB1	BD1	BF1	U1	V1	UY1	Y1	C	C1	CC
180TC	7.25	8.500	0.23	9.17	0.59	1.125	2.62	1.24	0.250	36.06	36.65	7.52
210TC	7.25	8.500	0.23	9.17	0.59	1.375	3.12	1.52	0.312	36.06	36.65	7.52
250TC	7.25	8.500	0.23	9.17	0.59	1.625	3.75	1.80	0.375	39.92	40.51	11.38
280TC	9.00	10.500	0.23	13.78	0.59	1.875	4.38	2.10	0.500	39.92	40.51	11.38
320TC	11.00	12.500	0.24	15.75	0.75	2.125	5.00	2.35	0.500	38.89	39.48	10.35
360TC1)	11.00	12.500	0.24	21.65	0.75	2.375	5.62	2.65	0.625	41.05	41.64	13.29

Send Quote Requests to info@automatedpt.com
Call +1(800)985-6929 To Order or Order Online At Nordgearmotors.com

DRIVESYSTEMS





SK 9082.1 + NEMA

SK 9082.1AZ

NEMA Input

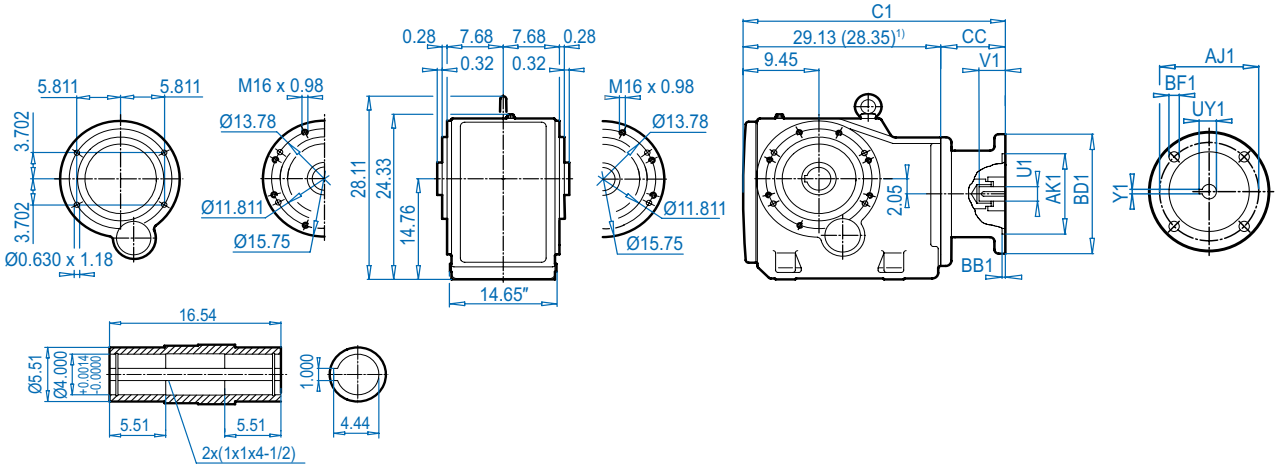

Dimensions in inches
DIMENSIONS

SK 9082.1AZ**K**

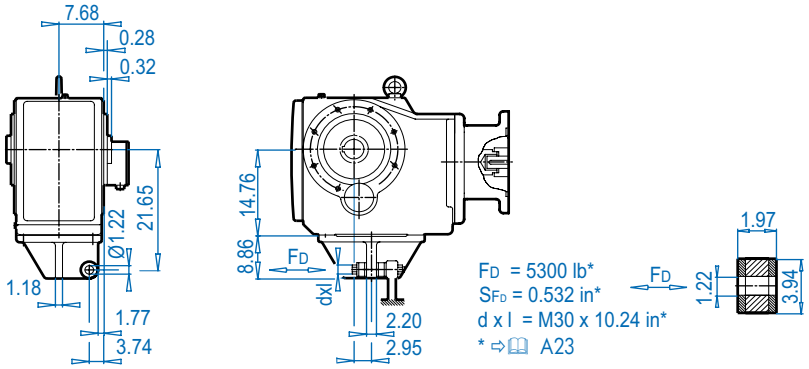

SK 9082.1AZ**B** ⇨ 574

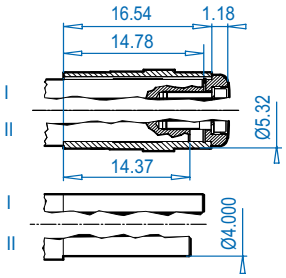

SK 9082.1AZ**S** ⇨ 571

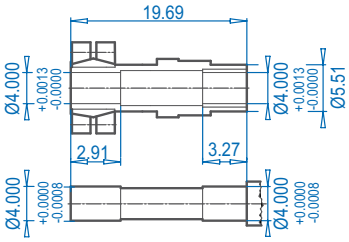

SK 9082.1AZ**SH**

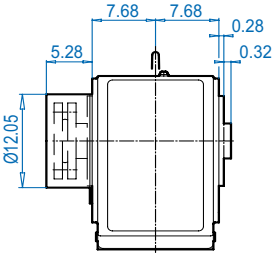

NEMA Dimensions

Type	AJ1	AK1	BB1	BD1	BF1	U1	V1	UY1	Y1	C1	CC
180TC	7.25	8.500	0.23	9.17	0.59	1.125	2.62	1.24	0.250	36.65	7.52
210TC	7.25	8.500	0.23	9.17	0.59	1.375	3.12	1.52	0.312	36.65	7.52
250TC	7.25	8.500	0.23	9.17	0.59	1.625	3.75	1.80	0.375	40.51	11.38
280TC	9.00	10.500	0.23	13.78	0.59	1.875	4.38	2.10	0.500	40.51	11.38
320TC	11.00	12.500	0.24	15.75	0.75	2.125	5.00	2.35	0.500	39.48	10.35
360TC1)	11.00	12.500	0.24	21.65	0.75	2.375	5.62	2.65	0.625	41.64	13.29

ALTERNATE SHAFTS SEE PAGES 566 - 573

Send Quote Requests to info@automatedpt.com
Call +1(800)985-6929 To Order or Order Online At Nordgearmotors.com

SK 9086.1 + Motor




SK 9086.1

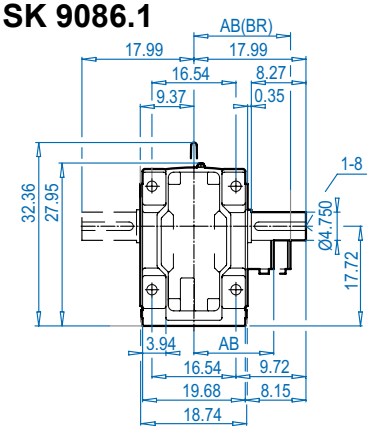

SK 9086.1AX

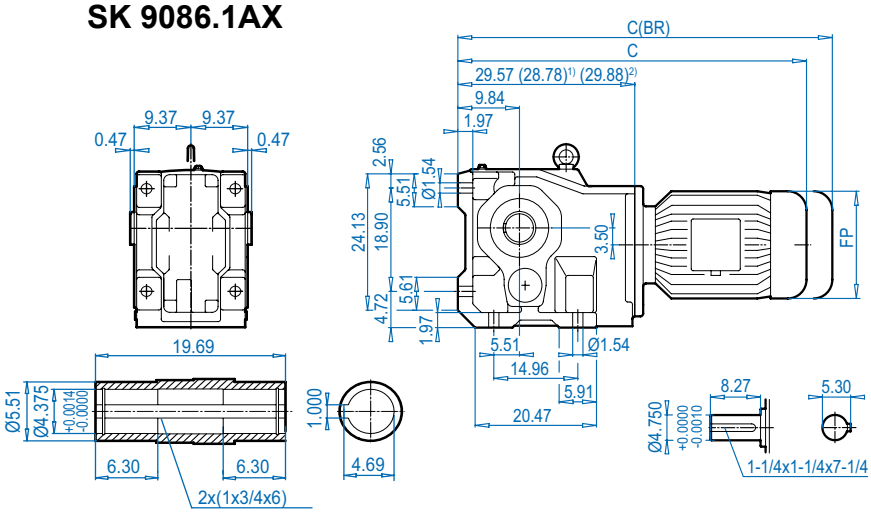

SK 9086.1VF

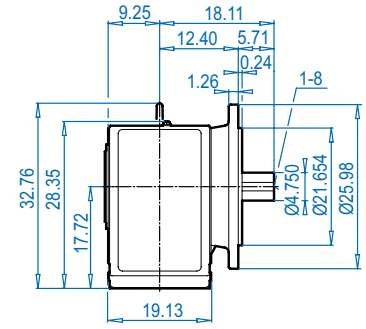

SK 9086.1AF

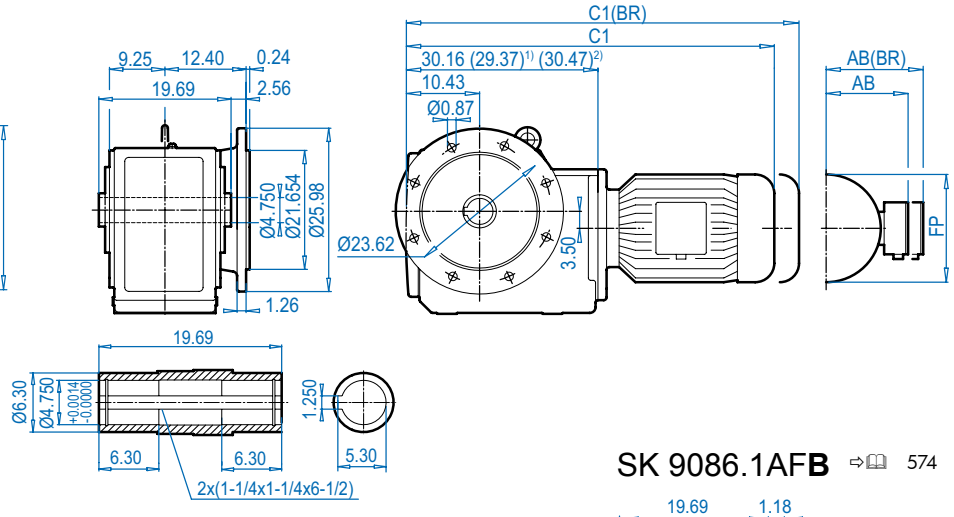

SK 9086.1AXB ⇨🕮 574

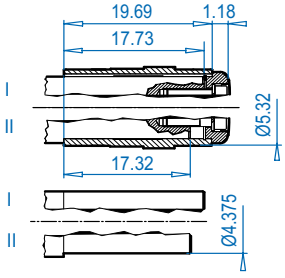

SK 9086.1AFB ⇨🕮 574

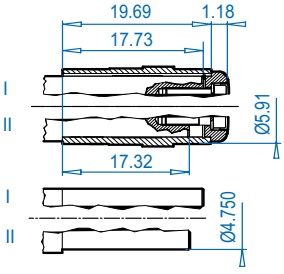

Motor dimensions.

Standard eff.	132S/M	160M/L		180MX/LX		200L	225S/M		250M[1)]	280S[1)]	280M[2)]	315S[2)]	315Ma[2)]	For Other Connection Possibilities please see ⇨🕮 555 & 557
Energy eff.	132SH/MH	160MH	160LH		180MH/LH	200LH		225SH/MH	250MH[1)]	280SH[1)]	280MH[2)]	315SH[2)]	315MHa[2)]	
AB	8.03	8.90	8.90	10.20	10.20	12.05	12.05	13.19	15.43	17.01	17.01	19.69	19.69	
AB (BR)	7.72	8.90	8.90	10.20	10.20	12.05	12.05	-	15.43	17.01	17.01	-	-	
C1	47.28	48.98	48.98	53.86	53.86	57.20	57.20	57.52	59.29	62.05	62.76	67.17	73.46	
C1 (BR)	51.50	56.56	56.56	57.99	57.99	63.78	63.78	-	69.13	69.13	74.17	-	-	
C	46.69	48.39	48.39	53.27	53.27	56.66	56.66	56.93	55.95	61.46	62.17	66.58	72.87	
C (BR)	50.91	54.97	54.97	57.40	57.40	63.23	63.23	-	68.54	68.54	73.58	-	-	
FP	10.47	12.60	12.60	14.09	14.09	15.67	15.67	18.50	19.49	21.85	21.85	24.02	24.02	

(BR) denotes Brakemotor

Send Quote Requests to info@automatedpt.com
Call +1(800)985-6929 To Order or Order Online At Nordgearmotors.com

DRIVESYSTEMS



SK 9086.1 + Motor

SK 9086.1AZ

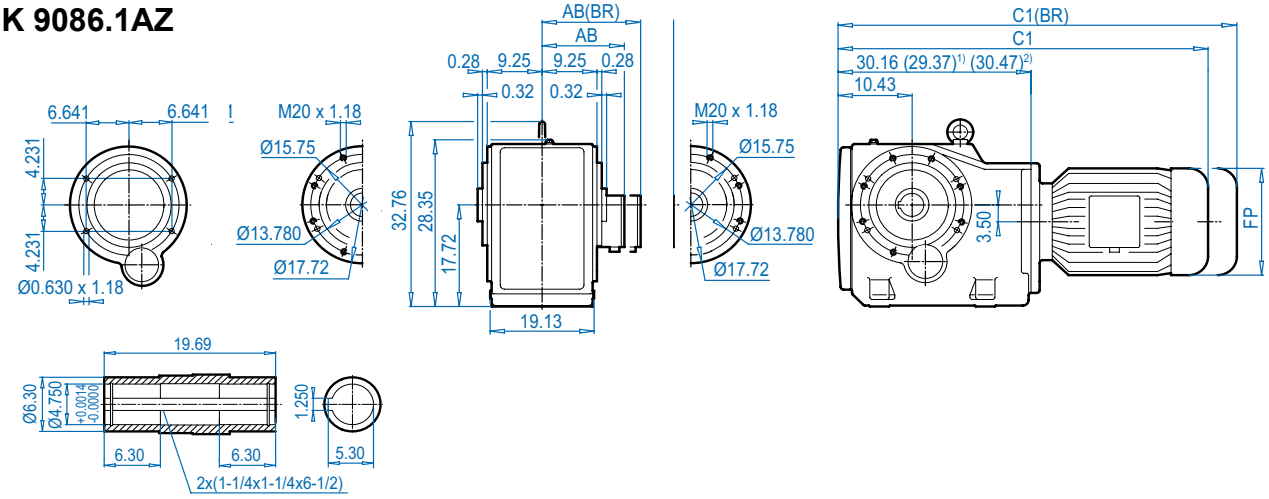

SK 9086.1AZ**K**

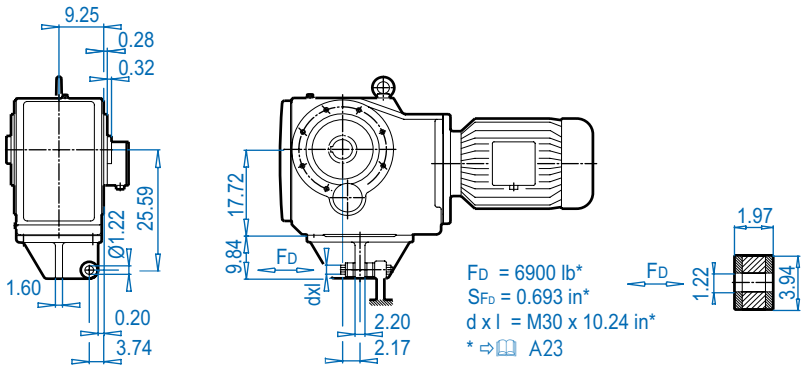

SK 9086.1AZ**B** ⇨ 574

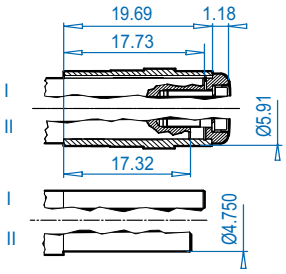

SK 9086.1AZ**S** ⇨ 571

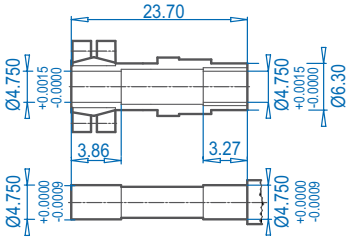

SK 9086.1AZ**SH**

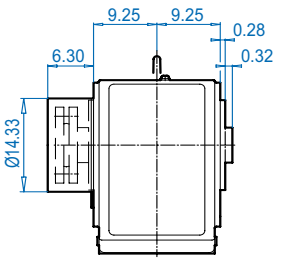

Motor dimensions.

Standard eff.	132S/M	160M/L		180MX/LX		200L	225S/M		250M1)	280S1)	280M2)	315S2)	315Ma2)	For Other Connection Possibilities please see ⇨ 555 & 557
Energy eff.	132SH/MH	160MH	160LH		180MH/LH	200LH		225SH/MH	250MH1)	280SH1)	280MH2)	315SH2)	315MHa2)	
AB	8.03	8.90	8.90	10.20	10.20	12.05	12.05	13.19	15.43	17.01	17.01	19.69	19.69	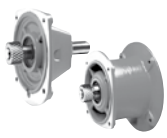
AB (BR)	7.72	8.90	8.90	10.20	10.20	12.05	12.05	-	15.43	17.01	17.01	-	-	
C1	47.28	48.98	48.98	53.86	53.86	57.20	57.20	57.52	59.29	62.05	62.76	67.17	73.46	
C1 (BR)	51.50	56.56	56.56	57.99	57.99	63.78	63.78	-	69.13	69.13	74.17	-	-	
FP	10.47	12.60	12.60	14.09	14.09	15.67	15.67	18.50	19.49	21.85	21.85	24.02	24.02	

(BR) denotes Brakemotor

Dimensions in Inches
DIMENSIONS
ALTERNATE SHAFTS SEE PAGES 566 - 573

Send Quote Requests to info@automatedpt.com
Call +1(800)985-6929 To Order or Order Online At Nordgearmotors.com

SK 9086.1 + NEMA




DRIVESYSTEMS

SK 9086.1

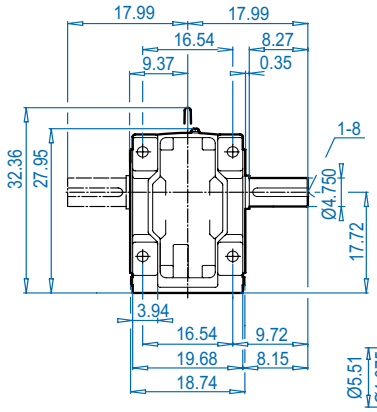

SK 9086.1AX

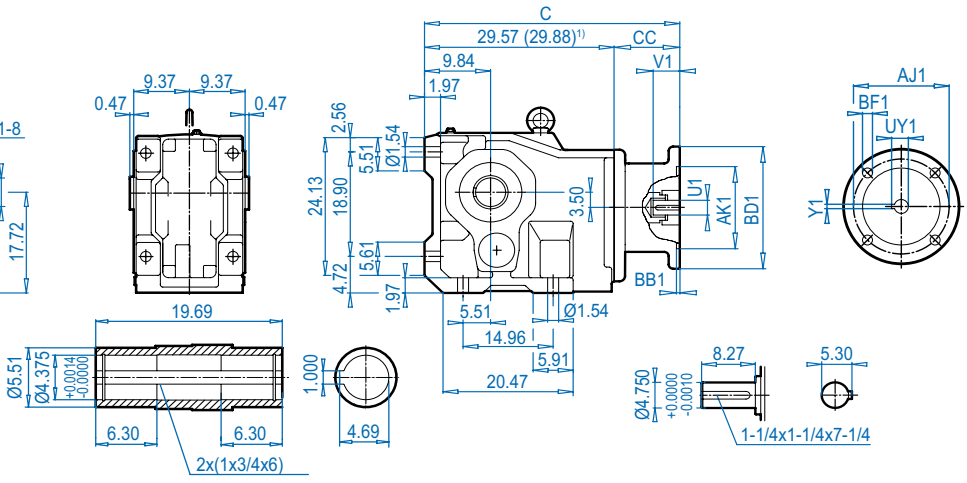

DIMENSIONS — Dimensions in Inches

SK 9086.1VF

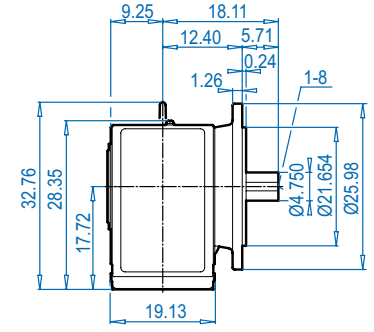

SK 9086.1AF

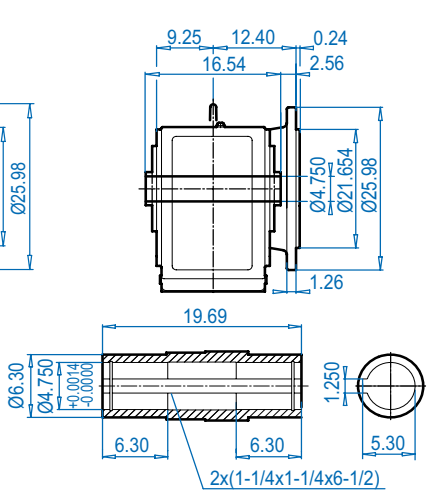

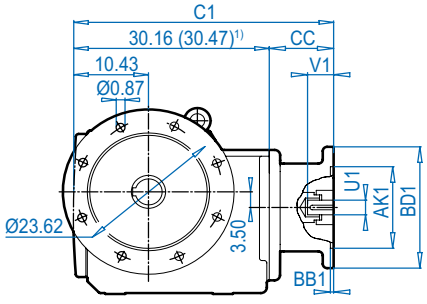

SK 9086.1AXB ⇨🕮 574

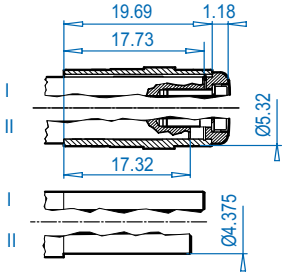

SK 9086.1AFB ⇨🕮 574

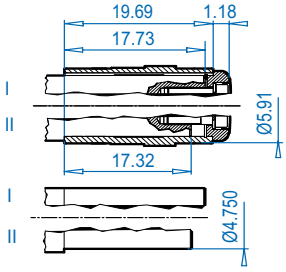

ALTERNATE SHAFTS SEE PAGES 566 - 573

NEMA Dimensions

Type	AJ1	AK1	BB1	BD1	BF1	U1	V1	UY1	Y1	C	C1	CC
180TC	7.25	8.500	0.23	9.17	0.59	1.125	2.62	1.24	0.250	37.07	37.68	7.52
210TC	7.25	8.500	0.23	9.17	0.59	1.375	3.12	1.52	0.312	37.07	37.68	7.52
250TC	7.25	8.500	0.23	9.17	0.59	1.625	3.75	1.80	0.375	40.95	41.54	11.38
280TC	9.00	10.500	0.23	13.78	0.59	1.875	4.38	2.10	0.500	40.95	41.54	11.38
320TC	11.00	12.500	0.24	15.75	0.75	2.125	5.00	2.35	0.500	39.92	40.51	10.35
360TC1)	11.00	12.500	0.24	21.65	0.75	2.375	5.62	2.65	0.625	43.17	43.76	13.29

Send Quote Requests to info@automatedpt.com
Call +1(800)985-6929 To Order or Order Online At Nordgearmotors.com

DRIVESYSTEMS

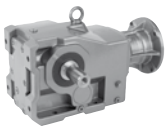



SK 9086.1 + NEMA

SK 9086.1AZ

NEMA Input

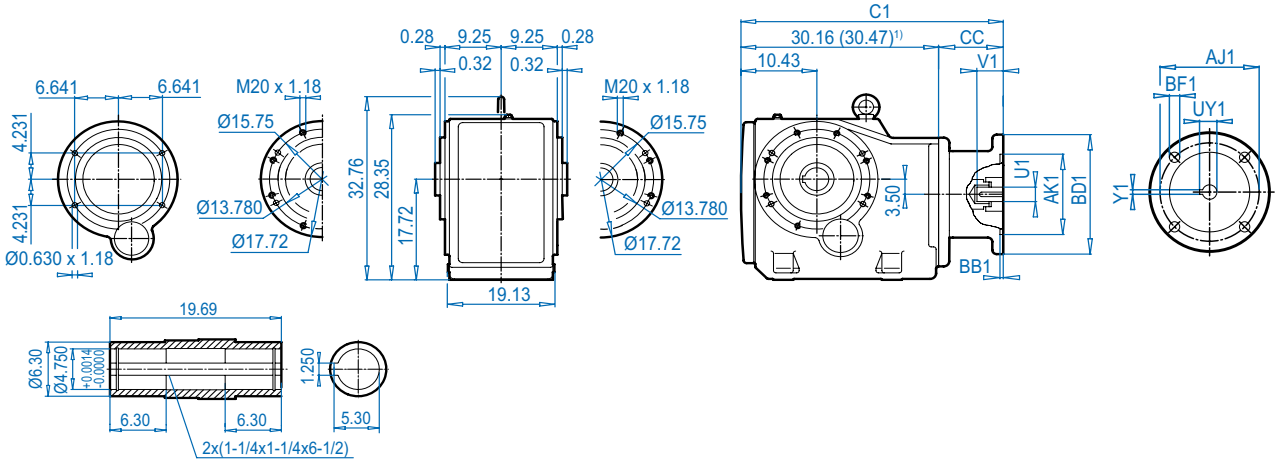

Dimensions in inches
DIMENSIONS

SK 9086.1AZ**K**

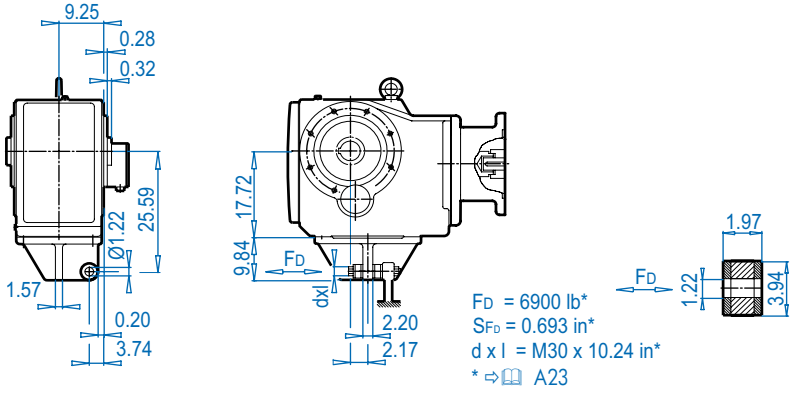

FD = 6900 lb*
SFD = 0.693 in*
d x l = M30 x 10.24 in*
* ⇨🕮 A23

SK 9086.1AZ**B** ⇨🕮 574

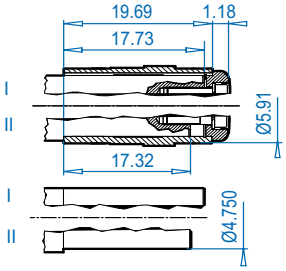

SK 9086.1AZ**S** ⇨🕮 571

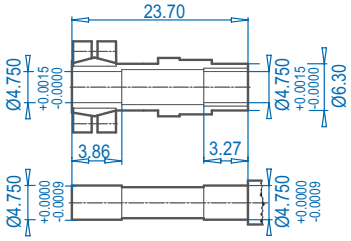

SK 9086.1AZ**SH**

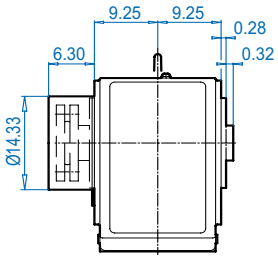

ALTERNATE SHAFTS SEE PAGES 566 - 573

NEMA Dimensions

Type	AJ1	AK1	BB1	BD1	BF1	U1	V1	UY1	Y1	C1	CC
180TC	7.25	8.500	0.23	9.17	0.59	1.125	2.62	1.24	0.250	37.68	7.52
210TC	7.25	8.500	0.23	9.17	0.59	1.375	3.12	1.52	0.312	37.68	7.52
250TC	7.25	8.500	0.23	9.17	0.59	1.625	3.75	1.80	0.375	41.54	11.38
280TC	9.00	10.500	0.23	13.78	0.59	1.875	4.38	2.10	0.500	41.54	11.38
320TC	11.00	12.500	0.24	15.75	0.75	2.125	5.00	2.35	0.500	40.51	10.35
360TC1)	11.00	12.500	0.24	21.65	0.75	2.375	5.62	2.65	0.625	43.76	13.29

Send Quote Requests to info@automatedpt.com
Call +1(800)985-6929 To Order or Order Online At Nordgearmotors.com

SK 9092.1 + Motor




SK 9092.1

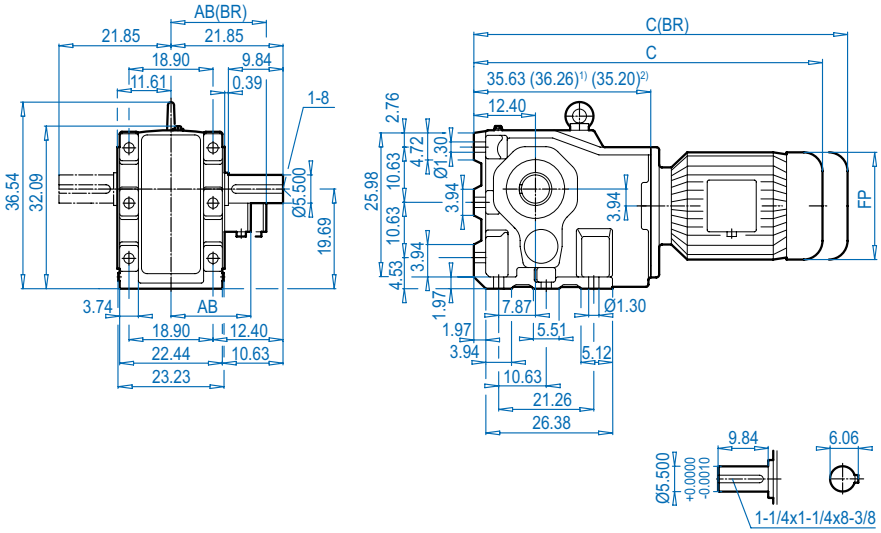

DIMENSIONS
Dimensions in Inches

SK 9092.1VF

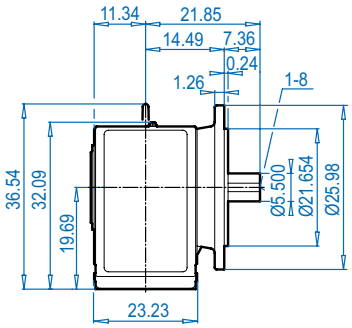

SK 9092.1AFS

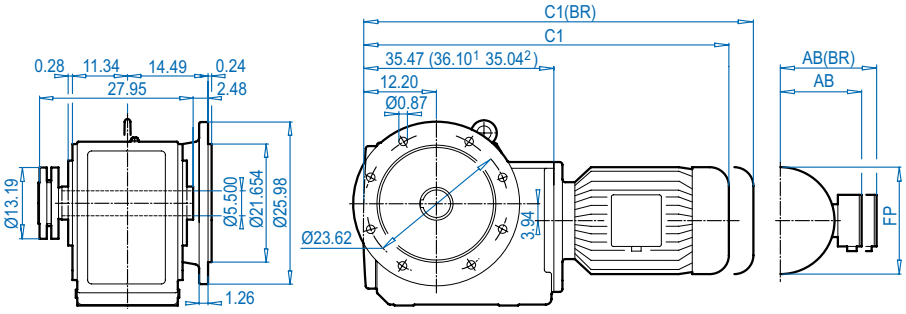

ALTERNATE SHAFTS SEE PAGES 566 - 573

Motor dimensions.

Standard eff.	160M/L		180MX/LX		200L	225S/M		250M1)	280S2)	280M2)	315S2)	315Ma2)	For Other Connection Possibilities please see ⇨ 555 & 557
Energy eff.	160MH	160LH		180MH/LH	200LH		225SH/MH	250MH1)	280SH2)	280MH2)	315SH2)	315MHa2)	
AB	8.90	8.90	10.20	10.20	12.05	12.05	13.19	15.43	17.01	17.01	19.69	19.69	
AB (BR)	8.90	8.90	10.20	10.20	12.05	12.05	-	15.43	17.01	17.01	-	-	
C1	54.29	54.29	59.17	59.17	62.52	62.52	62.83	66.02	68.78	67.32	71.73	78.03	
C1 (BR)	60.87	60.87	63.30	63.30	69.10	69.10	-	75.87	75.87	78.74	-	-	
C	54.45	54.45	59.33	59.33	62.68	62.68	62.99	66.18	68.94	67.48	71.89	78.19	
C (BR)	61.03	61.03	63.46	63.46	69.25	69.25	-	76.02	76.02	78.90	-	-	
FP	12.60	12.60	12.60	14.09	15.67	15.67	18.50	19.49	21.85	21.85	24.02	24.02	

(BR) denotes Brakemotor

Send Quote Requests to info@automatedpt.com
Call +1(800)985-6929 To Order or Order Online At Nordgearmotors.com

DRIVESYSTEMS



SK 9092.1 + Motor

SK 9092.1AZS

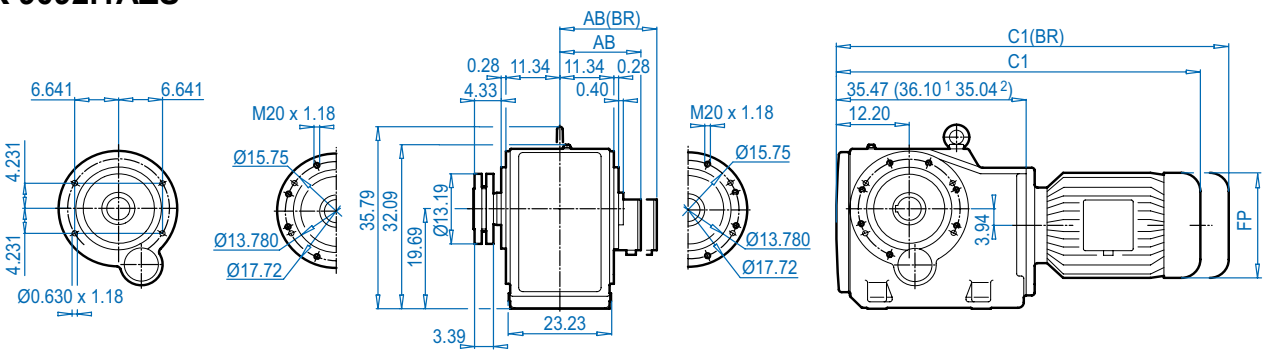

SK 9092.1AZ**K**

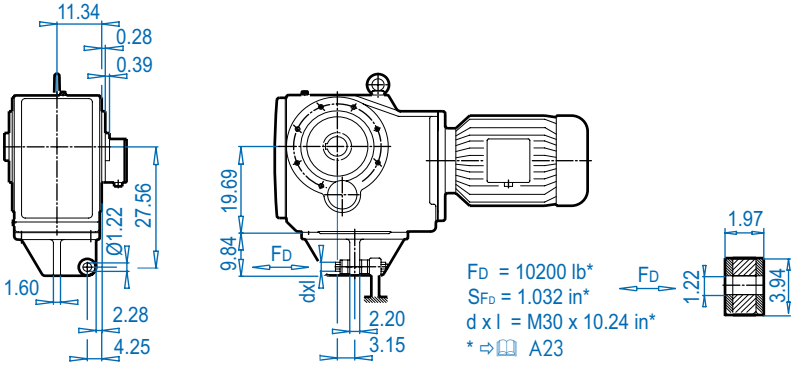

SK 9092.1AZ**S** ⇨ 571

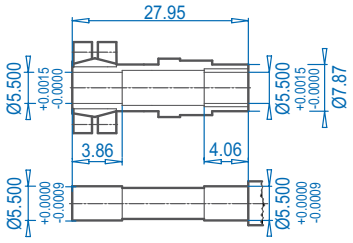

SK 9092.1AZ**SH**

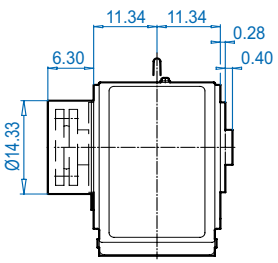

Motor dimensions.

Standard eff.	160M/L		180MX/LX		200L	225S/M		250M[1)]	280S[2)]	280M[2)]	315S[2)]	315Ma[2)]	For Other Connection Possibilities please see ⇨ 555 & 557
Energy eff.	160MH	160LH		180MH/LH	200LH		225SH/MH	250MH[1)]	280SH[2)]	280MH[2)]	315SH[2)]	315MHa[2)]	
AB	8.90	8.90	10.20	10.20	12.05	12.05	13.19	15.43	17.01	17.01	19.69	19.69	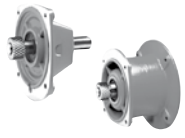
AB (BR)	8.90	8.90	10.20	10.20	12.05	12.05	-	15.43	17.01	17.01	-	-	
C1	54.29	54.29	59.17	59.17	62.52	62.52	62.83	66.02	68.78	67.32	71.73	78.03	
C1 (BR)	60.87	60.87	63.30	63.30	69.10	69.10	-	75.87	75.87	78.74	-	-	
FP	12.60	12.60	12.60	14.09	15.67	15.67	18.50	19.49	21.85	21.85	24.02	24.02	

(BR) denotes Brakemotor

Dimensions in Inches DIMENSIONS
ALTERNATE SHAFTS SEE PAGES 566 - 573

Send Quote Requests to info@automatedpt.com
Call +1(800)985-6929 To Order or Order Online At Nordgearmotors.com

SK 9092.1 + NEMA




SK 9092.1

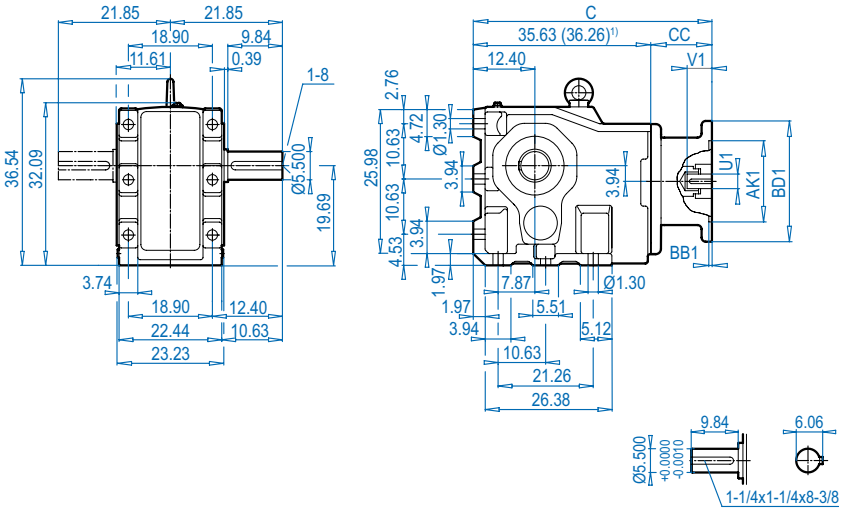

NEMA Input

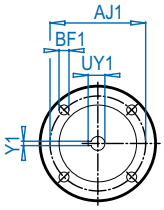

DIMENSIONS
Dimensions in Inches

SK 9092.1VF

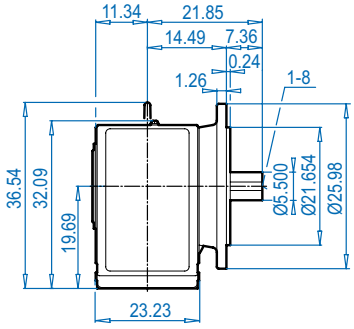

SK 9092.1AFS

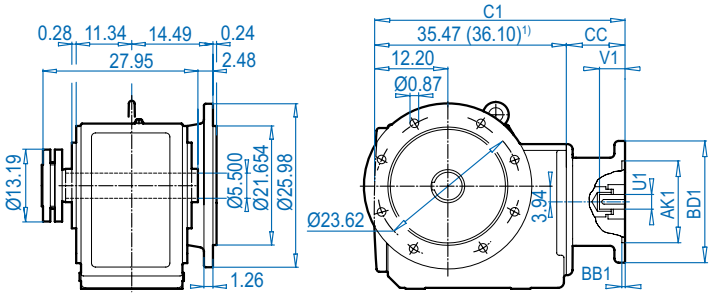

ALTERNATE SHAFTS SEE PAGES 566 - 573

NEMA Dimensions

Type	AJ1	AK1	BB1	BD1	BF1	U1	V1	UY1	Y1	C	C1	CC
180TC	7.25	8.500	0.23	9.17	0.59	1.125	2.62	1.24	0.250	43.15	42.99	7.52
210TC	7.25	8.500	0.23	9.17	0.59	1.375	3.12	1.52	0.312	43.15	42.99	7.52
250TC	7.25	8.500	0.23	9.17	0.59	1.625	3.75	1.80	0.375	47.01	46.85	11.38
280TC1)	9.00	10.500	0.23	13.78	0.59	1.875	4.38	2.10	0.500	47.01	47.48	11.38
320TC1)	11.00	12.500	0.24	15.75	0.75	2.125	5.00	2.35	0.500	46.61	46.45	10.35
360TC1)	11.00	12.500	0.24	21.65	0.75	2.375	5.62	2.65	0.625	49.55	49.39	13.29

Send Quote Requests to info@automatedpt.com
Call +1(800)985-6929 To Order or Order Online At Nordgearmotors.com

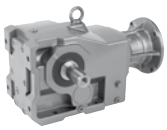


SK 9092.1 + NEMA

SK 9092.1AZS

NEMA Input

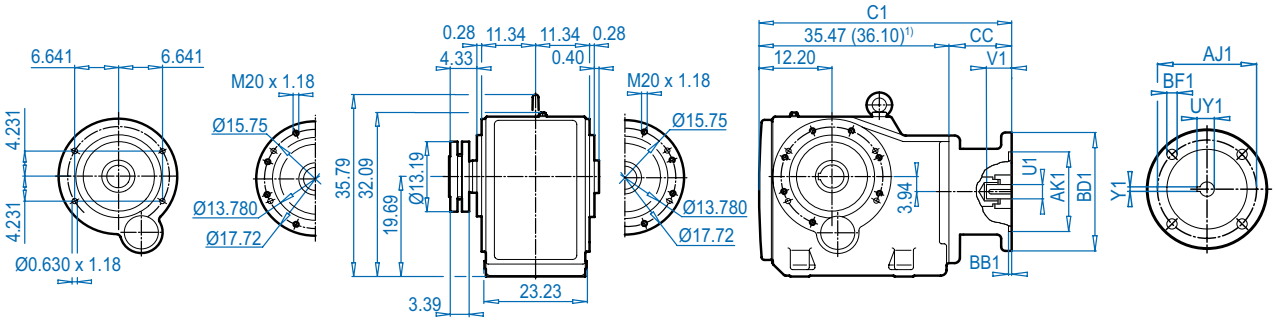

SK 9092.1AZ**K**

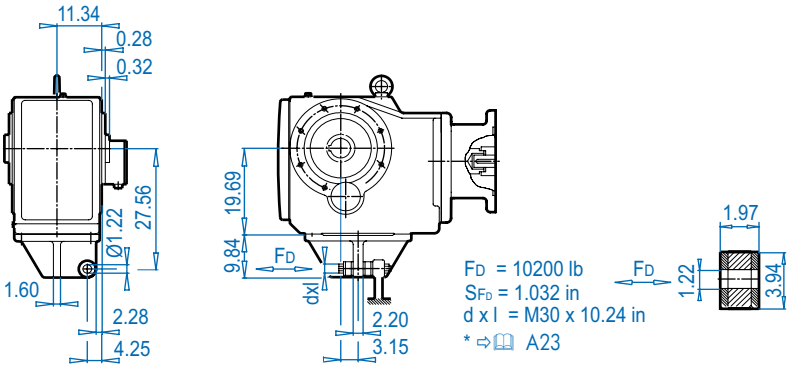

SK 9092.1AZ**S** ⇨ 571

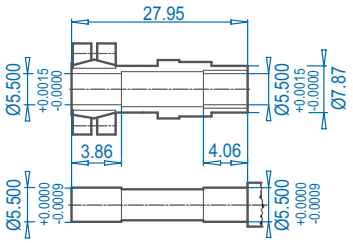

SK 9092.1AZ**SH**

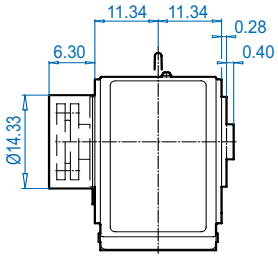

NEMA Dimensions

Type	AJ1	AK1	BB1	BD1	BF1	U1	V1	UY1	Y1	C1	CC
180TC	7.25	8.500	0.23	9.17	0.59	1.125	2.62	1.24	0.250	42.99	7.52
210TC	7.25	8.500	0.23	9.17	0.59	1.375	3.12	1.52	0.312	42.99	7.52
250TC	7.25	8.500	0.23	9.17	0.59	1.625	3.75	1.80	0.375	46.85	11.38
280TC[1)]	9.00	10.500	0.23	13.78	0.59	1.875	4.38	2.10	0.500	47.48	11.38
320TC[1)]	11.00	12.500	0.24	15.75	0.75	2.125	5.00	2.35	0.500	46.45	10.35
360TC[1)]	11.00	12.500	0.24	21.65	0.75	2.375	5.62	2.65	0.625	49.39	13.29

Send Quote Requests to info@automatedpt.com
Call +1(800)985-6929 To Order or Order Online At Nordgearmotors.com

SK 9096.1 + Motor




SK 9096.1

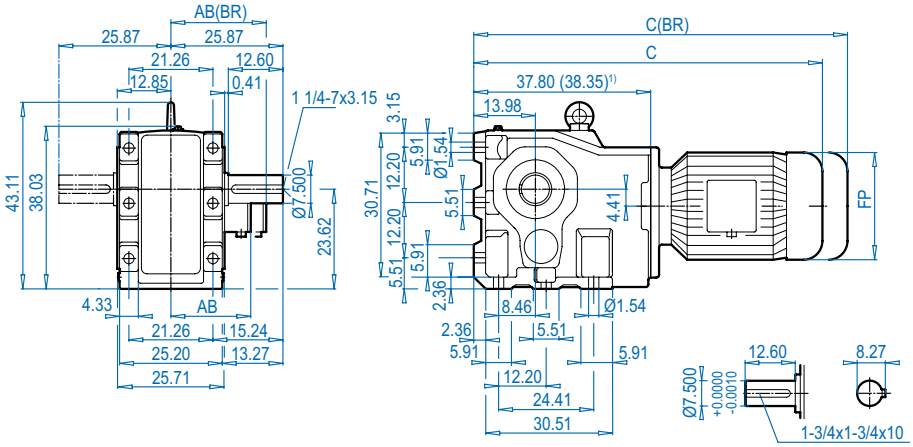

DIMENSIONS — Dimensions in Inches

SK 9096.1VF

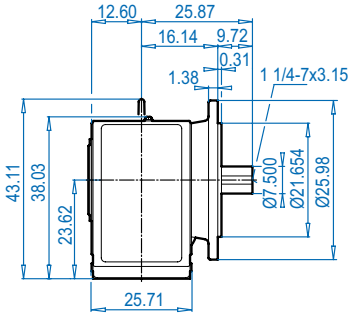

SK 9096.1AFS

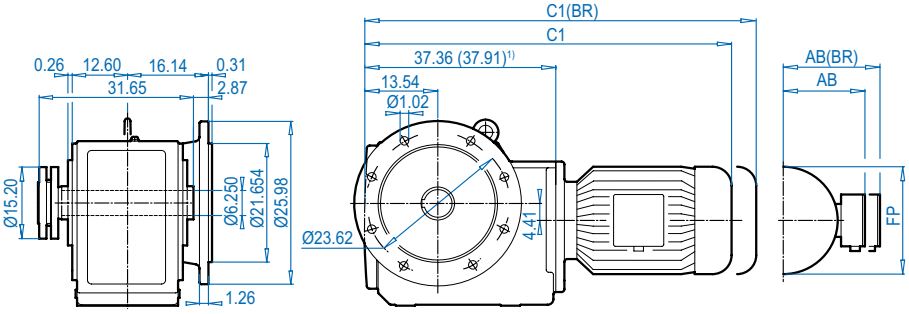

SK 9096.1AZ**S** ⇨🕮 571

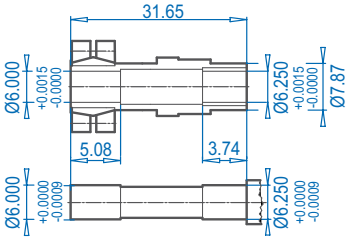

SK 9096.1AZ**SH**

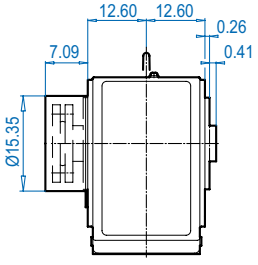

Motor dimensions.

Standard eff.	160M/L		180MX/LX		200L	225S/M		250M[1)]	280S[1)]	280M[1)]	315S[1)]	315Ma[1)]	For Other Connection Possibilities please see ⇨🕮 555 & 557
Energy eff.	160MH	160LH		180MH/LH	200LH		225SH/MH	250MH[1)]	280SH[1)]	280MH[1)]	315SH[1)]	315MHa[1)]	
AB	8.90	8.90	10.20	10.20	12.05	12.05	13.19	15.43	17.01	17.01	19.69	19.69	
AB (BR)	8.90	8.90	10.20	10.20	12.05	12.05	-	15.43	17.01	17.01	-	-	
C1	56.18	56.18	61.06	61.06	64.45	64.45	64.72	67.83	70.60	70.20	74.61	80.91	
C1 (BR)	62.76	62.76	65.20	65.20	71.02	71.02	-	77.68	77.68	81.61	-	-	
C	56.62	56.62	61.50	61.50	64.84	64.84	65.16	68.27	71.02	70.63	75.04	81.34	
C (BR)	63.20	63.20	65.63	65.63	71.42	71.42	-	78.11	78.11	82.05	-	-	
FP	12.60	12.60	12.60	14.09	15.67	15.67	18.50	19.49	21.85	21.85	24.02	24.02	

(BR) denotes Brakemotor

ALTERNATE SHAFTS SEE PAGES 566 - 573

Send Quote Requests to info@automatedpt.com
Call +1(800)985-6929 To Order or Order Online At Nordgearmotors.com

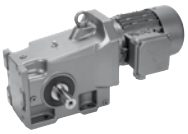

SK 9096.1 + Motor

SK 9096.1AZS

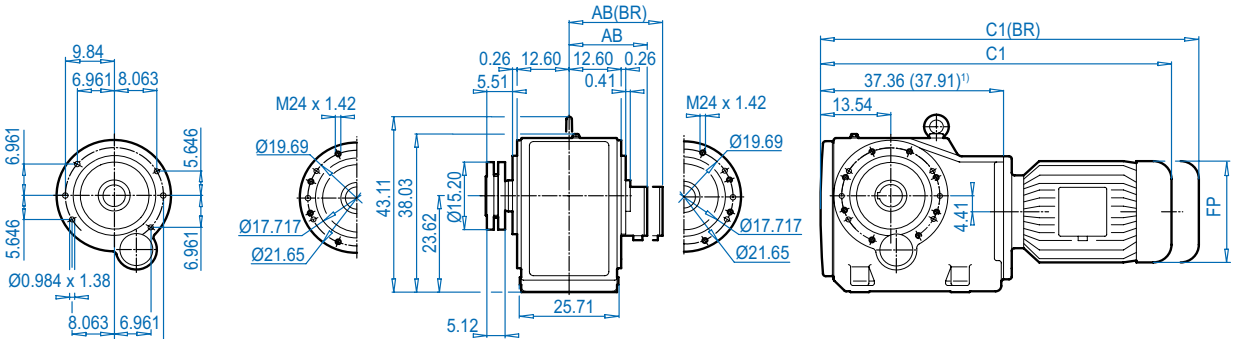

SK 9096.1AZ**K**

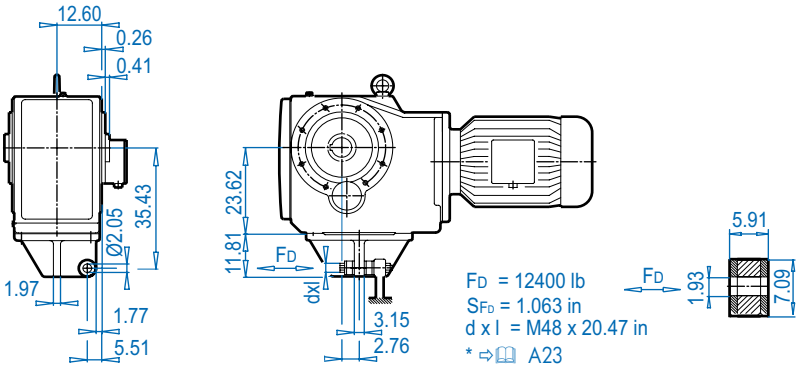

SK 9096.1AZ**S** ⇨ 571

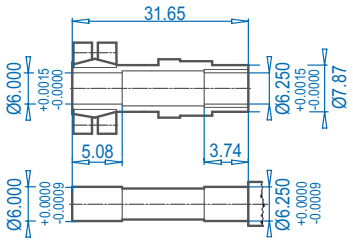

SK 9096.1AZ**SH**

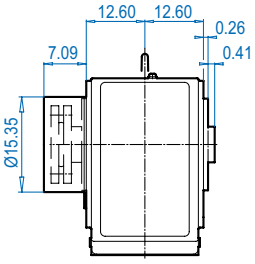

Motor dimensions.

Standard eff.	160M/L		180MX/LX		200L	225S/M		250M[1)]	280S[1)]	280M[1)]	315S[1)]	315Ma[1)]	For Other Connection Possibilities please see ⇨ 555 & 557
Energy eff.	160MH	160LH		180MH/LH	200LH		225SH/MH	250MH[1)]	280SH[1)]	280MH[1)]	315SH[1)]	315MHa[1)]	
AB	8.90	8.90	10.20	10.20	12.05	12.05	13.19	15.43	17.01	17.01	19.69	19.69	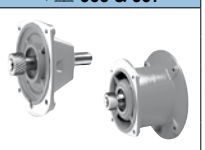
AB (BR)	8.90	8.90	10.20	10.20	12.05	12.05	-	15.43	17.01	17.01	-	-	
C1	56.18	56.18	61.06	61.06	64.45	64.45	64.72	67.83	70.60	70.20	74.61	80.91	
C1 (BR)	62.76	62.76	65.20	65.20	71.02	71.02	-	77.68	77.68	81.61	-	-	
FP	12.60	12.60	12.60	14.09	15.67	15.67	18.50	19.49	21.85	21.85	24.02	24.02	

(BR) denotes Brakemotor

Dimensions in Inches
DIMENSIONS
ALTERNATE SHAFTS SEE PAGES 566 - 573

Send Quote Requests to info@automatedpt.com
Call +1(800)985-6929 To Order or Order Online At Nordgearmotors.com

SK 9096.1 + NEMA




SK 9096.1

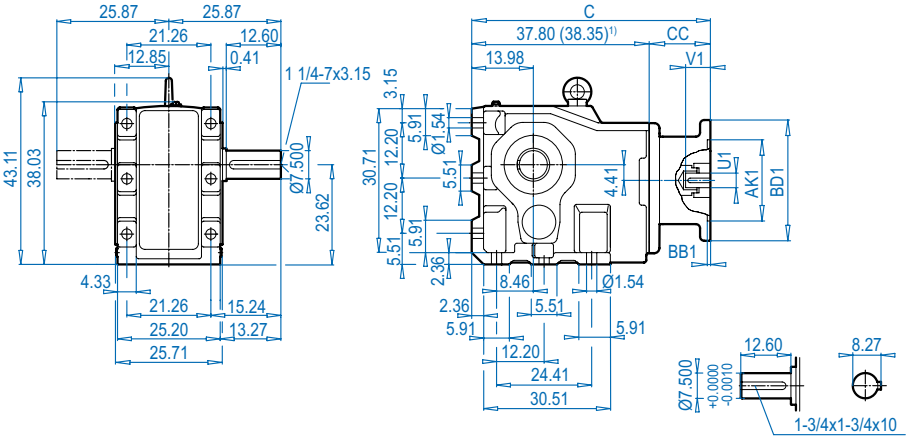

NEMA Input

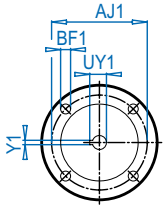

SK 9096.1VF

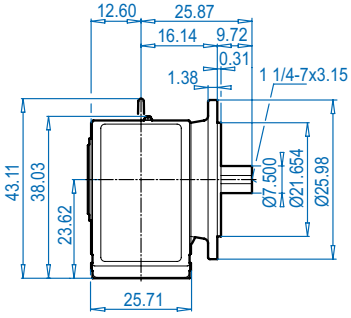

SK 9096.1AFS

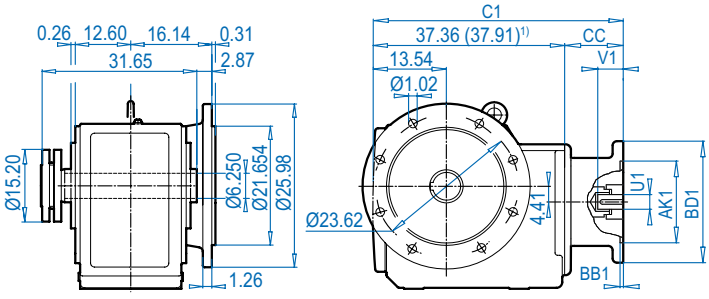

SK 9096.1AZ**S** ⇨🕮 571

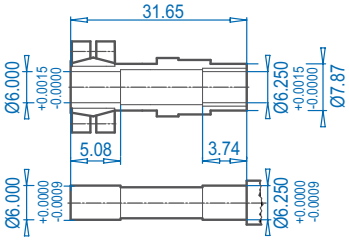

SK 9096.1AZ**SH**

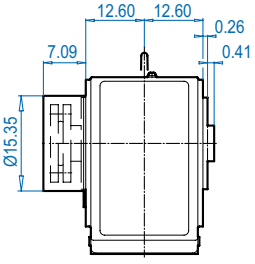

NEMA Dimensions

Type	AJ1	AK1	BB1	BD1	BF1	U1	V1	UY1	Y1	C	C1	CC
180TC	7.25	8.500	0.23	9.17	0.59	1.125	2.62	1.24	0.250	45.32	44.88	7.52
210TC	7.25	8.500	0.23	9.17	0.59	1.375	3.12	1.52	0.312	45.32	44.88	7.52
250TC	7.25	8.500	0.23	9.17	0.59	1.625	3.75	1.80	0.375	49.18	48.47	11.38
280TC1)	9.00	10.500	0.23	13.78	0.59	1.875	4.38	2.10	0.500	49.18	48.47	11.38
320TC1)	11.00	12.500	0.24	15.75	0.75	2.125	5.00	2.35	0.500	48.70	48.26	10.35
360TC1)	11.00	12.500	0.24	21.65	0.75	2.375	5.62	2.65	0.625	51.64	51.20	13.29

ALTERNATE SHAFTS SEE PAGES 566 - 573

Send Quote Requests to info@automatedpt.com
Call +1(800)985-6929 To Order or Order Online At Nordgearmotors.com

DRIVESYSTEMS

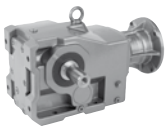



SK 9096.1 + NEMA

SK 9096.1AZS

NEMA Input

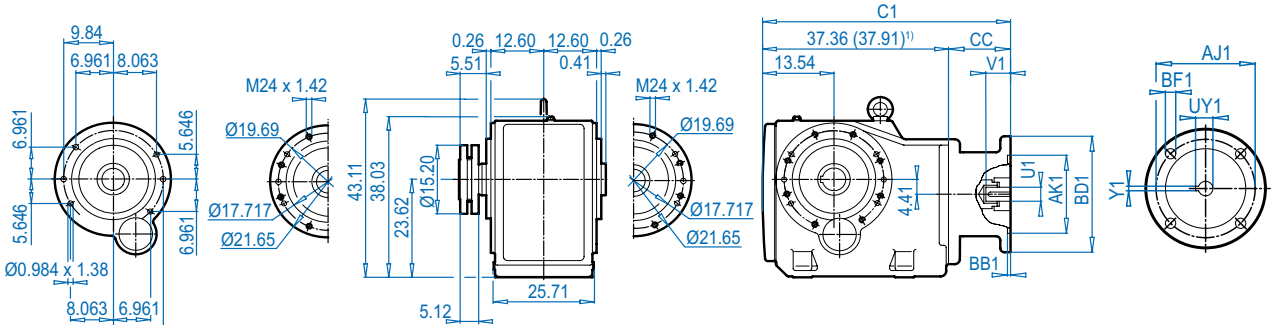

SK 9096.1AZ**K**

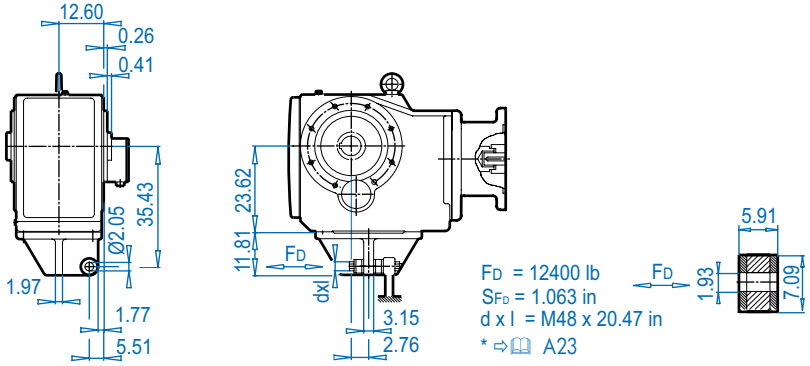

SK 9096.1AZ**S** ⇨ 571

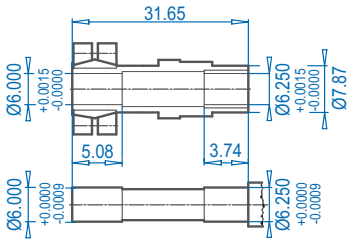

SK 9096.1AZ**SH**

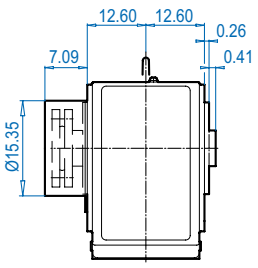

NEMA Dimensions

Type	AJ1	AK1	BB1	BD1	BF1	U1	V1	UY1	Y1	C1	CC
180TC	7.25	8.500	0.23	9.17	0.59	1.125	2.62	1.24	0.250	44.88	7.52
210TC	7.25	8.500	0.23	9.17	0.59	1.375	3.12	1.52	0.312	44.88	7.52
250TC	7.25	8.500	0.23	9.17	0.59	1.625	3.75	1.80	0.375	48.47	11.38
280TC[1)]	9.00	10.500	0.23	13.78	0.59	1.875	4.38	2.10	0.500	48.47	11.38
320TC[1)]	11.00	12.500	0.24	15.75	0.75	2.125	5.00	2.35	0.500	48.26	10.35
360TC[1)]	11.00	12.500	0.24	21.65	0.75	2.375	5.62	2.65	0.625	51.20	13.29

Dimensions in Inches
DIMENSIONS
ALTERNATE SHAFTS SEE PAGES 566 - 573

Send Quote Requests to info@automatedpt.com
Call +1(800)985-6929 To Order or Order Online At Nordgearmotors.com

SK 9072.1/32 - SK 9092.1/52




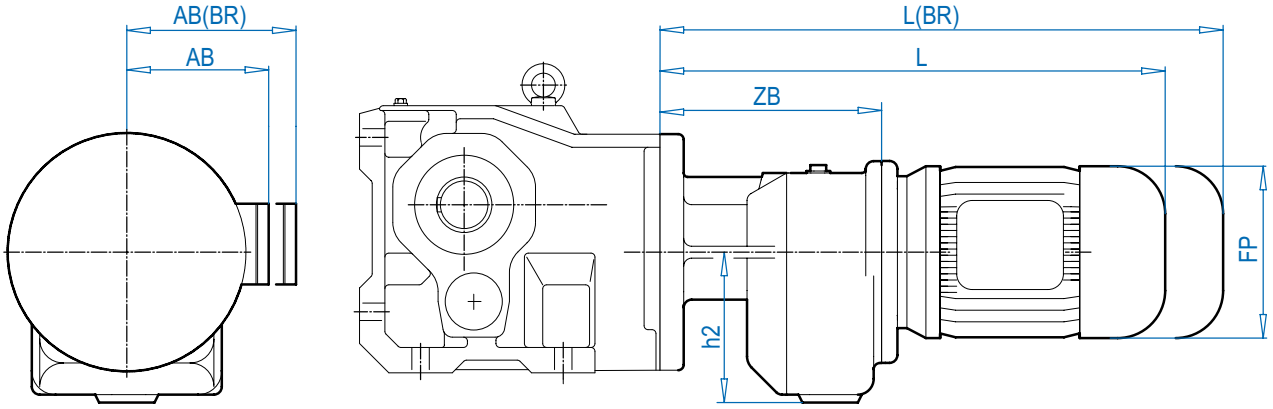

Motor dimensions

Type	SK 9072.1/32					SK 9072.1/42				For Other Connection Possibilities please see ⇨🕮 555 & 557
Standard eff.	71S/L	80S/L	90S/L	100L		90S/L	100L		132S/M	
Energy eff.		80LH	90SH/LH	100LH	112MH	90SH/LH	100LH	112MH	132SH/MH	
AB	4.88	5.59	5.79	6.65	7.05	5.79	6.65	7.05	8.03	
AB (BR)	5.24	5.63	5.83	6.26	6.69	5.83	6.26	6.69	7.72	
L	18.39	19.37	20.98	22.17	23.07	21.86	23.03	23.94	27.32	
L (BR)	20.67	21.89	23.94	25.75	26.73	24.80	26.61	27.60	31.54	
ZB	9.33					10.98				
h2	6.10					6.89				
FP	5.71	6.50	7.20	7.91	8.98	7.20	7.91	8.98	10.47	
	SK 9072.1 ⇨🕮 532					SK 9072.1 ⇨🕮 532				

ALTERNATE SHAFTS SEE PAGES 566 - 573

Type	SK 9082.1/42				SK 9082.1/52, SK 9086.1/52								For Other Connection Possibilities please see ⇨🕮 555 & 557
Standard eff.	90S/L	100L		132S/M	90S/L	100L		132S/M	160M/L		180MX/LX		
Energy eff.	90SH/LH	100LH	112MH	132SH/MH	90SH/LH	100LH	112MH	132SH/MH	160MH	160LH		180MH/LH	
AB	5.79	6.65	7.05	8.03	5.79	6.65	7.05	8.03	8.90	8.90	10.20	10.20	
AB (BR)	5.83	6.26	6.69	7.72	5.83	6.26	6.69	7.72	8.90	8.90	10.20	10.20	
L	21.10	22.28	23.19	26.57	23.46	23.86	24.76	28.15	30.63	30.63	35.51	35.51	
L (BR)	24.06	25.87	26.86	30.79	26.42	27.44	28.43	32.36	37.21	37.21	39.64	39.64	
ZB	10.24				11.81								
h2	6.89				8.35								
FP	7.20	7.91	8.98	10.47	7.20	7.91	8.98	10.47	12.60	12.60	14.09	14.09	
	SK 9082.1 ⇨🕮 536				SK 9082.1 ⇨🕮 536, SK 9086.1 ⇨🕮 540								

Type	SK 9092.1/52								For Other Connection Possibilities please see ⇨🕮 555 & 557
Standard eff.	90S/L	100L		132S/M	160M/L		180MX/LX		
Energy eff.	90SH/LH	100LH	112MH	132SH/MH	160MH	160LH		180MH/LH	
AB	5.79	6.65	7.05	8.03	8.90	8.90	10.20	10.20	
AB (BR)	5.83	6.26	6.69	7.72	8.90	8.90	10.20	10.20	
L	22.68	23.86	24.76	28.15	30.63	30.63	35.51	35.51	
L (BR)	25.63	27.44	28.43	32.36	37.21	37.21	39.64	39.64	
ZB	11.81								
h2	8.35								
FP	7.20	7.91	8.98	10.47	12.60	12.60	12.60	14.09	
	SK 9092.1 ⇨🕮 544								

(BR) denotes Brakemotor

Send Quote Requests to info@automatedpt.com
Call +1(800)985-6929 To Order or Order Online At Nordgearmotors.com

DRIVESYSTEMS





SK 9096.1/62
SK 9096.1/63

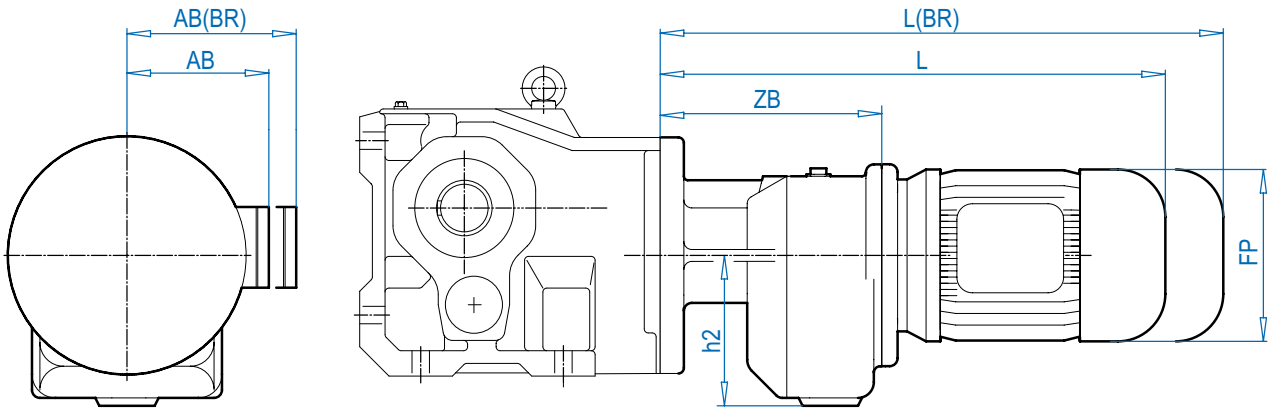

Dimensions in Inches
DIMENSIONS

ALTERNATE SHAFTS SEE PAGES 566 - 573

Motor dimensions

Type	SK9096.1/62										For Other Connection Possibilities please see ⇨🕮 555 & 557
Standard eff.	100L		132S/M	160M/L		180MX/LX		200L	225S/M		
Energy eff.	100LH	112MH	132SH/MH	160MH	160LH		180MH/LH	200LH		225SH/MH	
AB	6.65	7.05	8.03	8.90	8.90	10.20	10.20	12.05	12.05	13.19	
AB (BR)	6.26	6.69	7.72	8.90	8.90	10.20	10.20	12.05	12.05	-	
L	28.11	28.62	32.91	34.61	34.61	39.49	39.49	42.88	42.88	43.15	
L (BR)	31.70	32.28	37.13	41.19	41.19	43.62	43.62	49.45	49.45	-	
ZB	15.79										
h2	9.65										
FP	7.91	8.98	10.47	12.60	12.60	12.60	14.09	15.67	15.67	18.50	
	SK 9096.1 ⇨🕮 548										

Type	SK 9096.1/63										For Other Connection Possibilities please see ⇨🕮 555 & 557
Standard eff.	90S/L	100L		132S/M	160M/L		180MX/LX				
Energy eff.	90SH/LH	100LH	112MH	132SH/MH	160MH	160LH		180MH/LH			
AB	5.79	6.65	7.05	8.03	8.90	8.90	10.20	10.20			
AB (BR)	5.83	6.26	6.69	7.72	8.90	8.90	10.20	10.20			
L	25.63	27.09	27.60	31.89	33.58	33.58	38.46	38.46			
L (BR)	28.58	30.67	31.26	36.10	40.16	40.16	42.59	42.59			
ZB	14.76										
h2	9.65										
FP	7.20	7.91	8.98	10.47	12.60	12.60	14.09	14.09			
	SK 9096.1 ⇨🕮 548										

BR) denotes Brakemotor

Send Quote Requests to info@automatedpt.com
Call +1(800)985-6929 To Order or Order Online At Nordgearmotors.com

Solid Input Shaft
Type - W


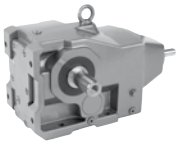

SK 92072

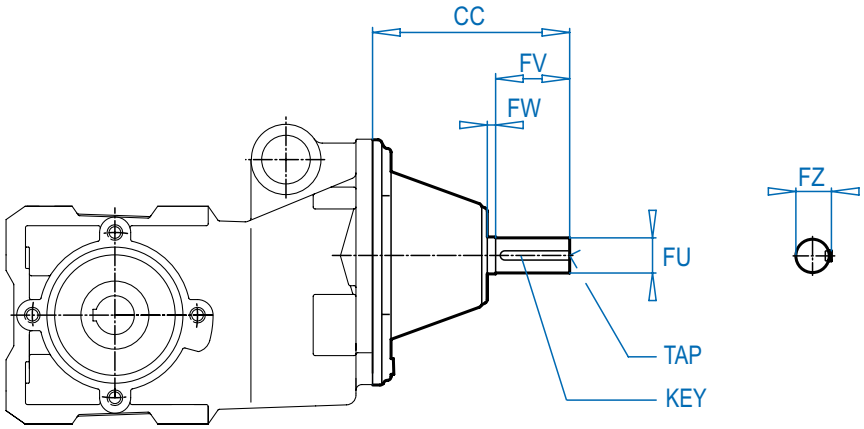

SK 92172 - SK 92772

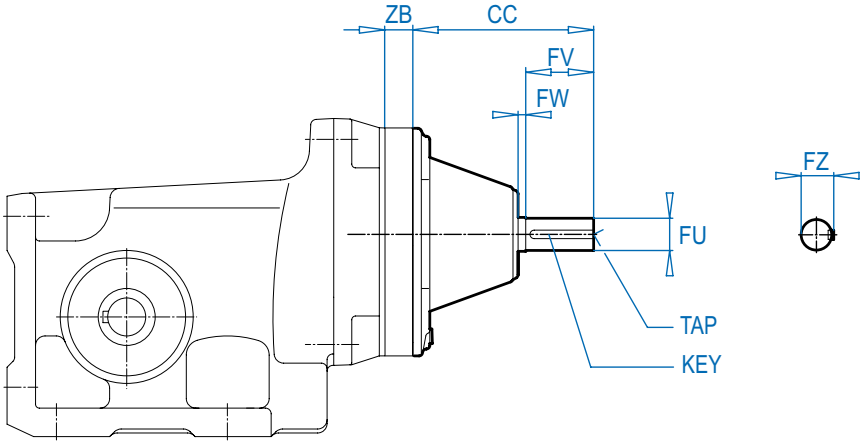

Unit	CC	FW	FV	FU	FZ	TAP	KEY	Unit Dimensions
SK 92072	3.89	0.16	1.13	0.500 +0.0000 - 0.0005	0.56	1/4-20	1/8 x 1/8 x 7/8	⇨🕮 464
SK 92172	3.89	0.16	1.13	0.500 +0.0000 - 0.0005	0.56	1/4-20	1/8 x 1/8 x 7/8	⇨🕮 468
SK 92372	4.33	0.16	1.57	0.625 +0.0000 - 0.0005	0.70	1/4-20	3/16 x 3/16 x 1 1/4	⇨🕮 472
SK 92672	4.33	0.16	1.57	0.750 +0.0000 - 0.0005	0.83	1/4-20	3/16 x 3/16 x 1 1/4	⇨🕮 476
SK 92772	4.84	0.12	1.97	0.875 +0.0000 - 0.0005	0.96	1/4-20	3/16 x 3/16 x 1 5/8	⇨🕮 480

Send Quote Requests to info@automatedpt.com
Call +1(800)985-6929 To Order or Order Online At Nordgearmotors.com

DRIVESYSTEMS

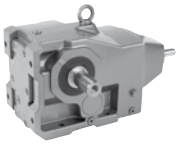



Solid Input Shaft Type - W

SK 9012.1 - SK 9086.1

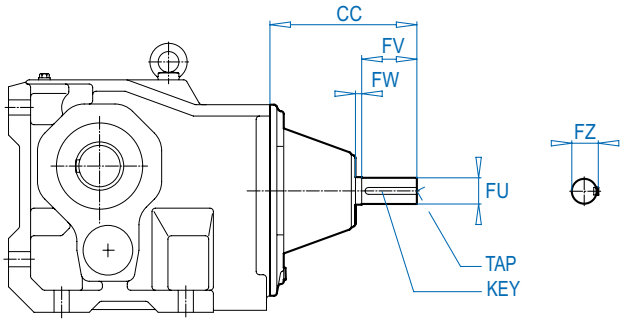

SK 9092.1 - SK 9096.1

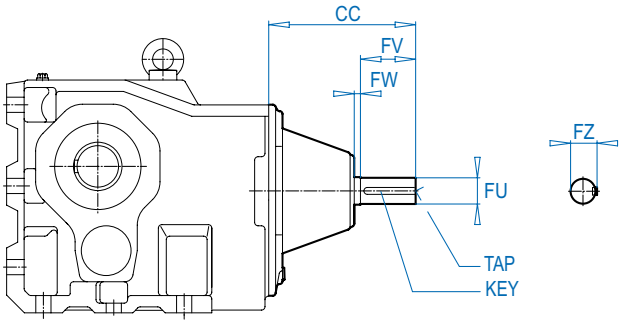

Dimensions in Inches
DIMENSIONS

Unit	CC	FW	FV	FU	FZ	TAP	KEY	Unit Dimensions
SK 9012.1	4.73	0.28	1.50	0.625 +0.0000 -0.0005	0.70	1/4-20	3/16 x 3/16 x 1 1/4	⇨🕮 484
SK 9013.1	4.73	0.28	1.50	0.625 +0.0000 -0.0005	0.70	1/4-20	3/16 x 3/16 x 1 1/4	⇨🕮 488
SK 9016.1	4.73	0.28	1.50	0.625 +0.0000 -0.0005	0.70	1/4-20	3/16 x 3/16 x 1 1/4	⇨🕮 492
SK 9017.1	4.73	0.28	1.50	0.625 +0.0000 -0.0005	0.70	1/4-20	3/16 x 3/16 x 1 1/4	⇨🕮 496
SK 9022.1	4.73	0.28	1.50	0.625 +0.0000 -0.0005	0.70	1/4-20	3/16 x 3/16 x 1 1/4	⇨🕮 500
SK 9023.1	4.73	0.28	1.50	0.625 +0.0000 -0.0005	0.70	1/4-20	3/16 x 3/16 x 1 1/4	⇨🕮 504
SK 9032.1	6.80	0.31	2.00	0.875 +0.0000 -0.0005	0.96	1/4-20	3/16 x 3/16 x 1 5/8	⇨🕮 508
SK 9033.1	4.73	0.28	1.50	0.625 +0.0000 -0.0005	0.70	1/4-20	3/16 x 3/16 x 1 1/4	⇨🕮 512
SK 9042.1	8.36	0.31	3.12	1.500 +0.0000 -0.0005	1.66	5/8-11	3/8 x 3/8 x 2 1/2	⇨🕮 516
SK 9043.1	6.80	0.31	2.00	0.875 +0.0000 -0.0005	0.96	1/4-20	3/16 x 3/16 x 1 5/8	⇨🕮 520
SK 9052.1	8.36	0.31	3.12	1.500 +0.0000 -0.0005	1.66	5/8-11	3/8 x 3/8 x 2 1/2	⇨🕮 524
SK 9053.1	6.80	0.31	2.00	0.875 +0.0000 -0.0005	0.96	1/4-20	3/16 x 3/16 x 1 5/8	⇨🕮 528
SK 9072.1	11.38	0.31	4.38	1.625 +0.0000 -0.0005	1.79	5/8-11	3/8 x 3/8 x 3 5/8	⇨🕮 532
SK 9072.1/32	6.80	0.31	2.00	0.875 +0.0000 -0.0005	0.96	1/4-20	3/16 x 3/16 x 1 5/8	⇨🕮 552
SK 9072.1/42	8.36	0.31	3.12	1.500 +0.0000 -0.0005	1.66	5/8-11	3/8 x 3/8 x 2 1/2	⇨🕮 552
SK 9082.1	15.61	0.47	5.50	2.500 +0.0000 -0.0010	2.77	3/4-10	5/8 x 5/8 x 4 5/8	⇨🕮 536
SK 9082.1/42	8.36	0.31	3.12	1.500 +0.0000 -0.0005	1.66	5/8-11	3/8 x 3/8 x 2 1/2	⇨🕮 552
SK 9082.1/52	8.36	0.31	3.12	1.500 +0.0000 -0.0005	1.66	5/8-11	3/8 x 3/8 x 2 1/2	⇨🕮 552
SK 9086.1	15.61	0.47	5.50	2.500 +0.0000 -0.0010	2.77	3/4-10	5/8 x 5/8 x 4 5/8	⇨🕮 540
SK 9086.1/52	8.36	0.31	3.12	1.500 +0.0000 -0.0005	1.66	5/8-11	3/8 x 3/8 x 2 1/2	⇨🕮 552
SK 9092.1	15.61	0.47	5.50	2.500 +0.0000 -0.0010	2.77	3/4-10	5/8 x 5/8 x 4 5/8	⇨🕮 544
SK 9092.1/52	8.36	0.31	3.12	1.500 +0.0000 -0.0005	1.66	5/8-11	3/8 x 3/8 x 2 1/2	⇨🕮 552
SK 9096.1	9.96	0.51	5.51	2.750 +0.0000 -0.0010	3.03	3/4-10	5/8 x 5/8 x 4 5/8	⇨🕮 548
SK 9096.1/62	11.38	0.31	4.38	1.625 +0.0000 -0.0005	1.79	5/8-11	3/8 x 3/8 x 3 5/8	⇨🕮 553
SK 9096.1/63	8.36	0.31	3.12	1.500 +0.0000 -0.0005	1.66	5/8-11	3/8 x 3/8 x 2 1/2	⇨🕮 553

Send Quote Requests to info@automatedpt.com
Call +1(800)985-6929 To Order or Order Online At Nordgearmotors.com

IEC Inputs



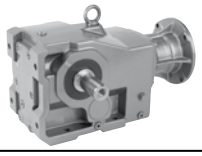

SK 92072 - SK 92772

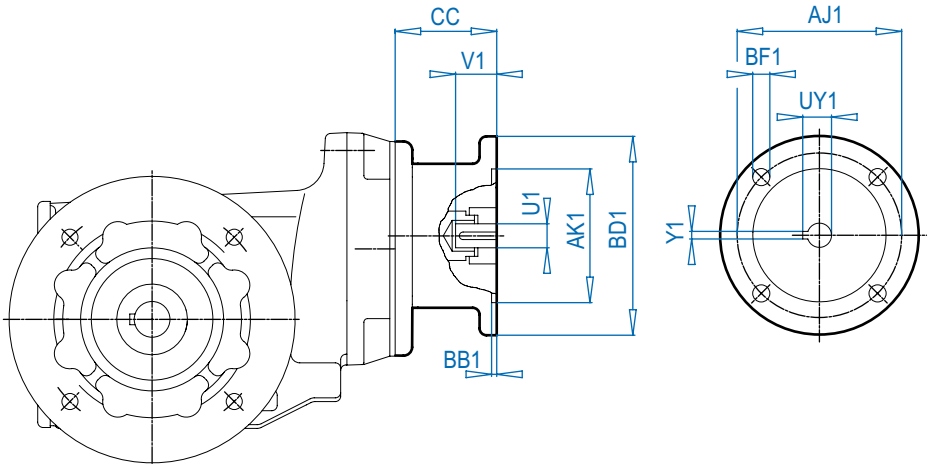

DIMENSIONS – Dimensions in Inches

IEC Dimensions (mm)

Input	CC	AJ1	AK1	BB1	BD1	BF1	U1	V1	UY1	Y1
IEC 63	85	115	95	3.5	140	M8	11	23	12.8	4
IEC 71	85	130	110	4.0	160	M8	14	30	16.3	5
IEC 80	102.5	165	130	4.0	200	M10	19	40	21.8	6
IEC 90	102.5	165	130	4.0	200	M10	24	50	27.3	8
IEC 100	125.5	215	180	5.0	250	M12	28	60	31.3	8
IEC 112	125.5	215	180	5.0	250	M12	28	60	31.3	8
IEC 132	175	265	230	5.0	300	M12	38	80	41.3	10
IEC 160	–	300	250	6.0	350	M16	42	110	45.3	12
IEC 180	–	300	250	6.0	350	M16	48	110	51.8	14
IEC 200	–	350	300	6.0	400	M16	55	110	59.3	16

Send Quote Requests to info@automatedpt.com
Call +1(800)985-6929 To Order or Order Online At Nordgearmotors.com



IEC Inputs

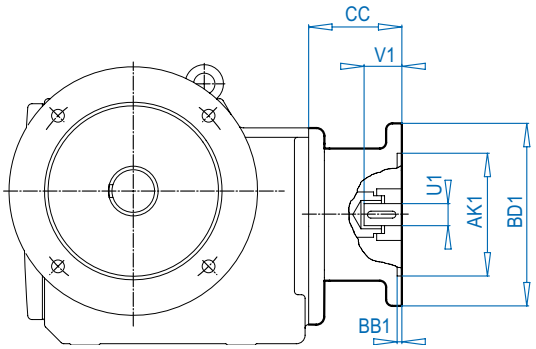

Figure 1
4 Bolt Flange

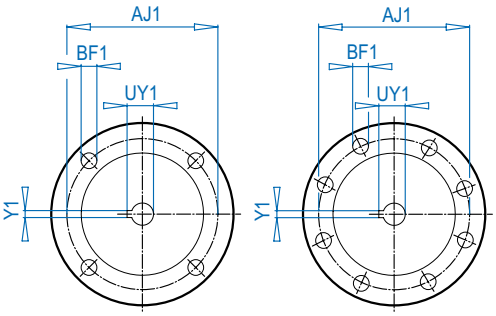

Figure 2
8 Bolt Flange
(for IEC 225 - 315)

IEC Dimensions (mm)

Input	AJ1	AK1	BB1	BD1	BF1	U1	V1	UY1	Y1	Flange
IEC 63	115	95	3.5	140	M8	11	23	12.8	4	Fig. 1
IEC 71	130	110	4.0	160	M8	14	30	16.3	5	Fig. 1
IEC 80	165	130	4.0	200	M10	19	40	21.8	6	Fig. 1
IEC 90	165	130	4.0	200	M10	24	50	27.3	8	Fig. 1
IEC 100	215	180	5.0	250	M12	28	60	31.3	8	Fig. 1
IEC 112	215	180	5.0	250	M12	28	60	31.3	8	Fig. 1
IEC 132	265	230	5.0	300	M12	38	80	41.3	10	Fig. 1
IEC 160	300	250	6.0	350	M16	42	110	45.3	12	Fig. 1
IEC 180	300	250	6.0	350	M16	48	110	51.8	14	Fig. 1
IEC 200	350	300	6.0	400	M16	55	110	59.3	16	Fig. 1
IEC 225	400	350	6.0	450	M16	60	140	64.4	18	Fig. 2
IEC 250	500	450	6.0	550	M16	65	140	69.4	18	Fig. 2
IEC 280	500	450	6.0	550	M16	75	140	79.9	20	Fig. 2
IEC 315	600	550	7.0	660	M20	80	170	85.4	22	Fig. 2

CC Dimensions

Unit	IEC63	IEC 71	IEC 80	IEC 90	IEC 100	IEC 112	IEC 132	IEC 160	IEC 180	IEC 200	IEC 225	IEC 250	IEC 280	IEC 315
SK 9012.1 SK 9013.1	85	89	105	105	130	130	–	–	–	–	–	–	–	–
SK 9016.1 SK 9017.1	85	89	105	105	130	130	–	–	–	–	–	–	–	–
SK 9022.1 SK 9023.1	85	89	105	105	130	130	–	–	–	–	–	–	–	–
SK 9032.1	–	88	107	107	124	124	156	–	–	–	–	–	–	–
SK 9033.1	85	89	105	105	130	130	–	–	–	–	–	–	–	–
SK 9042.1	–	–	–	109	133	133	190	194	194	–	–	–	–	–
SK 9043.1	–	88	107	107	124	124	156	–	–	–	–	–	–	–
SK 9052.1	–	–	–	109	133	133	190	194	194	–	–	–	–	–
SK 9053.1	–	88	107	107	124	124	156	–	–	–	–	–	–	–
SK 9072.1	–	–	–	–	127	127	177	266	266	229	303	–	–	–
SK 9072.1/32	–	88	107	107	124	124	156	–	–	–	–	–	–	–
SK 9072.1/42	–	–	–	109	133	133	190	194	194	–	–	–	–	–
SK 9082.1	–	–	–	–	–	–	177	266	266	229	303	303.5	303.5	381.5
SK 9082.1/42/52	–	–	–	109	133	133	190	194	194	–	–	–	–	–
SK 9086.1	–	–	–	–	–	–	177	266	266	229	303	303.5	303.5	381.5
SK 9086.1/52	–	–	–	109	133	133	190	194	194	–	–	–	–	–
SK 9092.1	–	–	–	–	–	–	177	266	266	229	303	303.5	303.5	381.5
SK 9092.1/52	–	–	–	109	133	133	190	194	194	–	–	–	–	–
SK 9096.1	–	–	–	–	–	–	177	266	266	229	303	303.5	303.5	381.5
SK 9096.1/62	–	–	–	–	127	127	177	266	266	229	303	–	–	–
SK 9096.1/63	–	–	–	109	133	133	190	194	194	–	–	–	–	–

Send Quote Requests to info@automatedpt.com
Call +1(800)985-6929 To Order or Order Online At Nordgearmotors.com

B14 Flange Design Option VZ





DRIVESYSTEMS

SK 92072 VZ

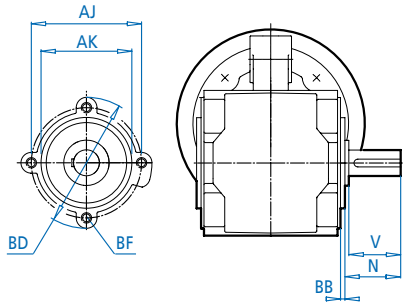

SK 92172 VZ - SK 92772 VZ

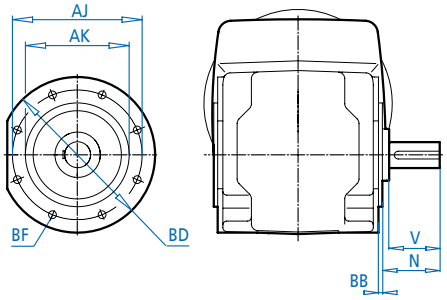

SK 9072.1 - SK 9096.1/63 VZ

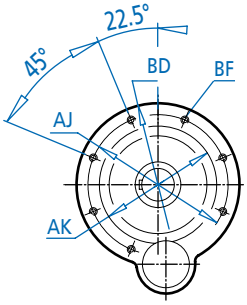

SK 9012.1 - SK 9052.1 VZ

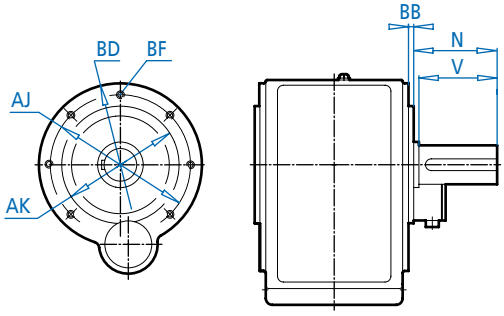

DIMENSIONS — Dimensions in Inches

ALTERNATE SHAFTS SEE PAGES 566 - 573

Type	Mounting dimensions flange B14					Shaft dimensions	
	BD	AK	AJ	BB	BF(mm)	V	N
SK 92072 VZ	4.04	2.756	3.35	0.10	M8 x 13	1.50	1.69
SK 92172 VZ	4.72	3.150	3.94	0.12	M6 x 13	1.50	1.73
SK 92372 VZ	5.51	3.740	4.53	0.12	M8 x 13	1.97	2.20
SK 92672 VZ	5.51	3.740	4.53	0.12	M8 x 13	2.36	2.52
SK 92772 VZ	6.30	4.331	5.12	0.16	M8 x 13	2.76	2.95
SK 9012.1 VZ SK 9013.1 VZ	5.51	3.740	4.53	0.12	M8 x 13	2.36	2.52
SK 9016.1 VZ SK 9017.1 VZ	5.51	3.740	4.53	0.12	M8 x 13	2.76	2.91
SK 9022.1 VZ SK 9023.1 VZ	6.30	4.331	5.12	0.16	M8 x 13	2.76	2.95
SK 9032.1 VZ SK 9033.1 VZ	7.87	5.118	6.50	0.12	M10 x 16	3.54	3.78
SK 9042.1 VZ SK 9043.1 VZ	9.84	7.087	8.46	0.28	M12 x 20	4.72	4.92
SK 9052.1 VZ SK 9053.1 VZ	11.81	9.055	10.43	0.16	M12 x 20	5.51	5.75
SK 9072.1 VZ SK 9072.1/32 VZ SK 9072.1/42 VZ	13.78	9.843	11.81	0.20	M16 x 25	6.69	6.97
SK 9082.1 VZ SK 9082.1/42 VZ SK 9082.1/52 VZ	15.75	11.811	13.78	0.28	M16 x 25	8.27	8.58
SK 9086.1 VZ SK 9086.1/52 VZ	17.72	13.780	15.75	0.28	M20 x 30	8.27	8.58
SK 9092.1 VZ SK 9092.1/52 VZ	17.72	13.780	15.75	0.28	M20 x 30	9.84	10.24
SK 9096.1 VZ SK 9096.1/62 VZ SK 9096.1/63 VZ	21.65	17.717	19.69	0.26	M24 x 30	12.60	13.01

Send Quote Requests to info@automatedpt.com
Call +1(800)985-6929 To Order or Order Online At Nordgearmotors.com

DRIVESYSTEMS





B14 Flange Foot Mounted Option VXZ

SK ... VXZ

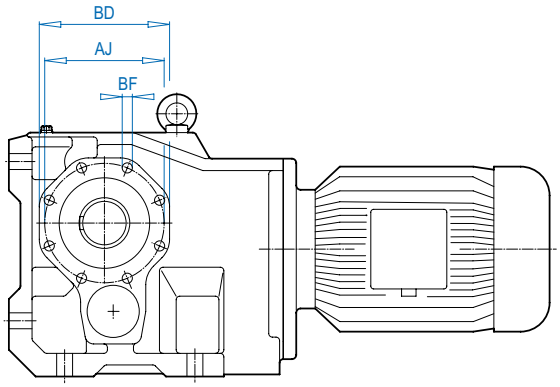

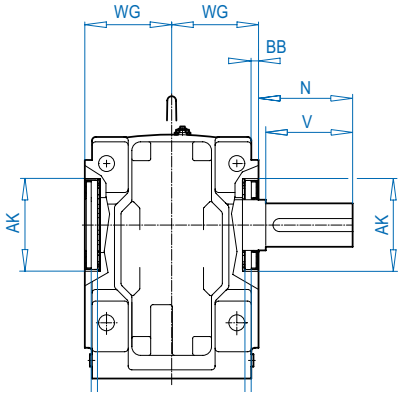

SK ... AXZ

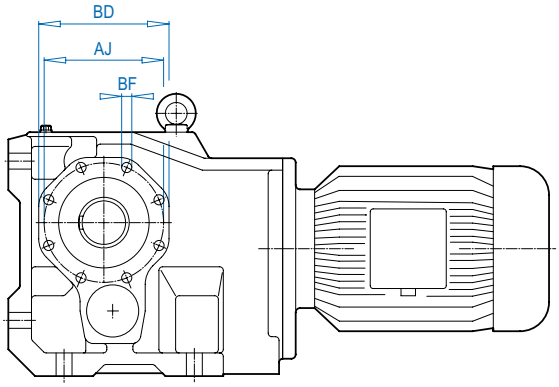

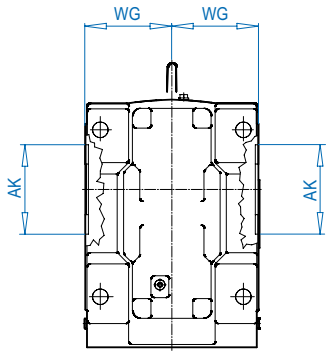

Dimensions in Inches
DIMENSIONS

Type	Mounting dimensions flange B14					Outline dimensions		
	BD	AK	AJ	BB	BF(mm)	WG	V	N
SK 9012.1 VXZ/AXZ SK 9013.1 VXZ/AXZ	4.33	2.953	3.94	0.16	M8 x 13	2.80	2.36	2.52
SK 9016.1 VXZ/AXZ SK 9017.1 VXZ/AXZ	4.33	2.953	3.94	0.16	M8 x 13	2.80	2.76	2.91
SK 9022.1 VXZ/AXZ SK 9023.1 VXZ/AXZ	4.92	3.543	4.53	0.16	M8 x 13	3.39	2.76	2.91
SK 9032.1 VXZ/AXZ SK 9033.1 VXZ/AXZ	5.91	3.937	5.12	0.20	M10 x 16	3.94	3.54	3.78
SK 9042.1 VXZ/AXZ SK 9043.1 VXZ/AXZ	7.09	4.921	6.50	0.20	M12 x 20	4.53	4.72	4.92
SK 9052.1 VXZ/AXZ SK 9053.1 VXZ/AXZ	8.66	5.906	7.64	0.20	M12 x 20	5.71	5.51	5.75
SK 9072.1 VXZ/AXZ SK 9072.1/32 VXZ/AXZ SK 9072.1/42 VXZ/AXZ	9.84	7.087	8.46	0.20	M12 x 20	6.69	6.69	6.97
SK 9082.1 VXZ/AXZ SK 9082.1/42 VXZ/AXZ SK 9082.1/52 VXZ/AXZ	11.81	9.055	10.43	0.20	M12 x 20	7.87	8.27	8.58
SK 9086.1 VXZ/AXZ SK 9086.1/52 VXZ/AXZ	13.78	9.843	11.81	0.20	M16 x 25	9.37	8.27	8.62
SK 9092.1 VXZ/AXZ SK 9092.1/52 VXZ/AXZ	15.75	11.417	13.78	0.20	M20 x 30	11.61	9.84	10.24
SK 9096.1 VXZ/AXZ SK 9096.1/62 VXZ/AXZ SK 9096.1/63 VXZ/AXZ	17.72	12.205	15.75	0.20	M20 x 30	12.85	12.60	13.01

ALTERNATE SHAFTS SEE PAGES 566 - 573

Send Quote Requests to info@automatedpt.com
Call +1(800)985-6929 To Order or Order Online At Nordgearmotors.com

Send Quote Requests to info@automatedpt.com
Call +1(800)985-6929 To Order or Order Online At Nordgearmotors.com

B5 Flange Foot Mounted Option VXF





SK ... VXF

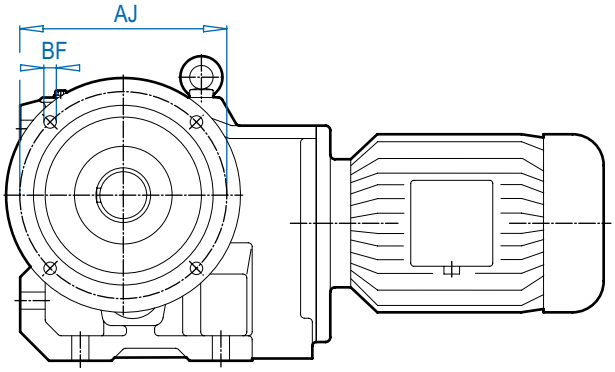

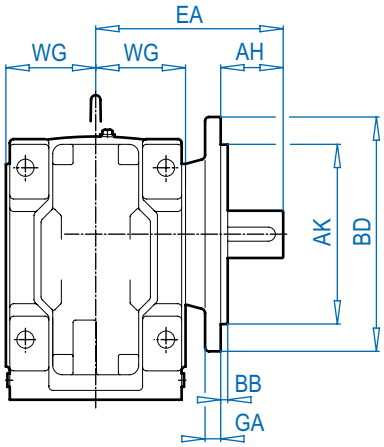

DIMENSIONS
Dimensions in Inches
ALTERNATE SHAFTS SEE PAGES 566 - 573

Type	Mounting dimensions flange B5						Outline dimensions		
	BD	AK	AJ	BB	BF	GA	AH	WG	EA
SK 9012.1 VXF SK 9013.1 VXF	6.30	4.331	5.12	0.14	0.35	0.47	1.34	2.80	5.32
SK 9016.1 VXF SK 9017.1 VXF	6.30	4.331	5.12	0.14	0.35	0.47	1.73 1.34	2.80	5.71 5.32
SK 9022.1 VXF SK 9023.1 VXF	7.87	5.118	6.50	0.14	0.43	0.47	1.54	3.39	6.30
SK 9032.1 VXF SK 9033.1 VXF	9.84	7.087	8.46	0.16	0.53	0.63	2.21	3.94	7.72
SK 9042.1 VXF SK 9043.1 VXF	11.81	9.055	10.43	0.16	0.69	0.79	3.15	4.53	9.45
SK 9052.1 VXF SK 9053.1 VXF	13.78	9.843	11.81	0.20	0.69	0.79	3.39	5.71	11.46
SK 9072.1 VXF SK 9072.1/32 VXF SK 9072.1/42 VXF	15.75	11.811	13.78	0.20	0.71	0.79	4.41	6.69	13.66

Send Quote Requests to info@automatedpt.com
Call +1(800)985-6929 To Order or Order Online At Nordgearmotors.com

DRIVESYSTEMS



Output Shaft Protection Covers Option AXH / AZH

SK ... AXZH

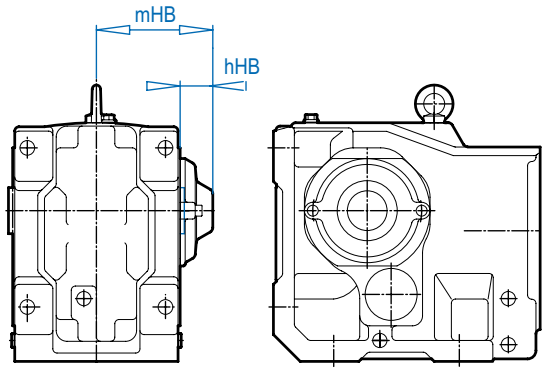

SK ... AZH

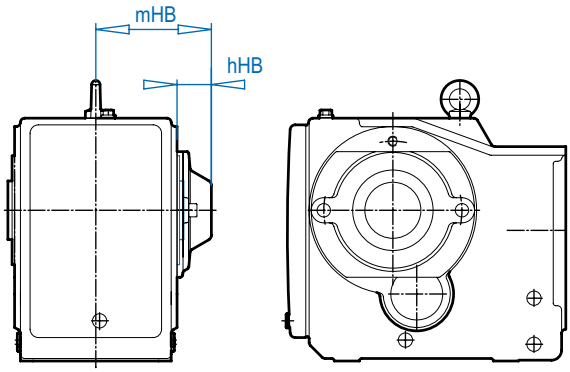

SK ... AZH66
SK ... AXH66

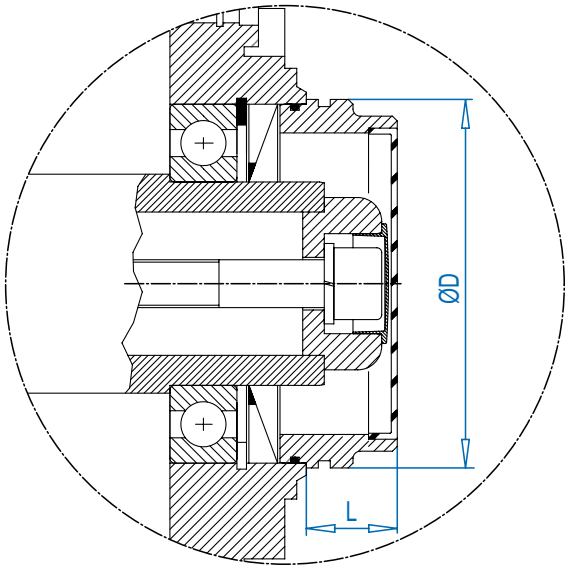

Dimensions in Inches
DIMENSIONS

Type

	hHB	mHB
SK 92072 AZH	1.34	3.41
SK 92172 AZH	1.46	3.90
SK 92372 AZH	1.65	4.61
SK 92672 AZH	1.65	4.72
SK 9012.1 AXZH	1.46	4.25
SK 9012.1 AZH	1.65	4.33
SK 9013.1 AXZH	1.46	4.25
SK 9013.1 AZH	1.65	4.33
SK 9016.1 AXZH	1.46	4.25
SK 9016.1 AZH	1.65	4.33
SK 9017.1 AXZH	1.46	4.25
SK 9017.1 AZH	1.65	4.33
SK 92772 AXZH	-	-
SK 92772 AZH	1.73	5.16
SK 9022.1 AXZH	1.65	5.04
SK 9022.1 AZH	1.73	4.96
SK 9023.1 AXZH	1.65	5.04
SK 9023.1 AZH	1.73	4.96
SK 9032.1 AXZH	1.73	5.67
SK 9032.1 AZH	1.85	5.67
SK 9033.1 AXZH	1.73	5.67
SK 9033.1 AZH	1.85	5.67
SK 9042.1 AXZH	1.77	6.30
SK 9042.1 AZH	2.17	6.42
SK 9043.1 AXZH	1.77	6.30
SK 9043.1 AZH	2.17	6.42
SK 9052.1 AXZH	1.85	7.56
SK 9052.1 AZH	2.36	7.91
SK 9053.1 AXZH	1.85	7.56
SK 9053.1 AZH	2.36	7.91
SK 9072.1 AXZH	2.09	8.78
SK 9072.1 AZH	2.44	8.94
SK 9082.1 AXZH	2.36	10.24
SK 9082.1 AZH	2.56	10.24
SK 9086.1 AXZH	2.09	11.46
SK 9086.1 AZH	3.31	12.56

Type

		ØD	L
SK 9012.1 AXH66	SK 9013.1 AXH66	3.15	0.98
SK 9012.1 AZH66	SK 9013.1 AZH66	3.35	1.10
SK 9016.1 AXH66	SK 9017.1 AXH66	3.15	0.98
SK 9016.1 AZH66	SK 9017.1 AZH66	3.35	1.10
SK 9022.1 AXH66	SK 9023.1 AXH66	3.74	1.18
SK 9022.1 AZH66	SK 9023.1 AZH66	4.09	1.34
SK 9032.1 AXH66	SK 9033.1 AXH66	4.09	1.34
SK 9032.1 AZH66	SK 9033.1 AZH66	4.53	1.38
SK 9042.1 AXH66	SK 9043.1 AXH66	4.09	1.38
SK 9042.1 AZH66	SK 9043.1 AZH66	5.71	1.50
SK 9052.1 AXH66	SK 9053.1 AXH66	6.14	1.50
SK 9052.1 AZH66	SK 9053.1 AZH66	7.40	1.73
SK 9072.1 AXH66		7.40	1.73
SK 9072.1 AZH66		7.40	1.73
SK 9082.1 AXH66		9.65	1.97
SK 9082.1 AZH66		10.24	2.13
SK 9086.1 AXH66		10.24	2.13
SK 9086.1 AZH66		12.40	1.97

Send Quote Requests to info@automatedpt.com
Call +1(800)985-6929 To Order or Order Online At Nordgearmotors.com

Agitator Design Option VL 2 & VL 3 with Hollow Shaft




NORD DRIVESYSTEMS

SK ... AFVL2
SK ... AFVL3

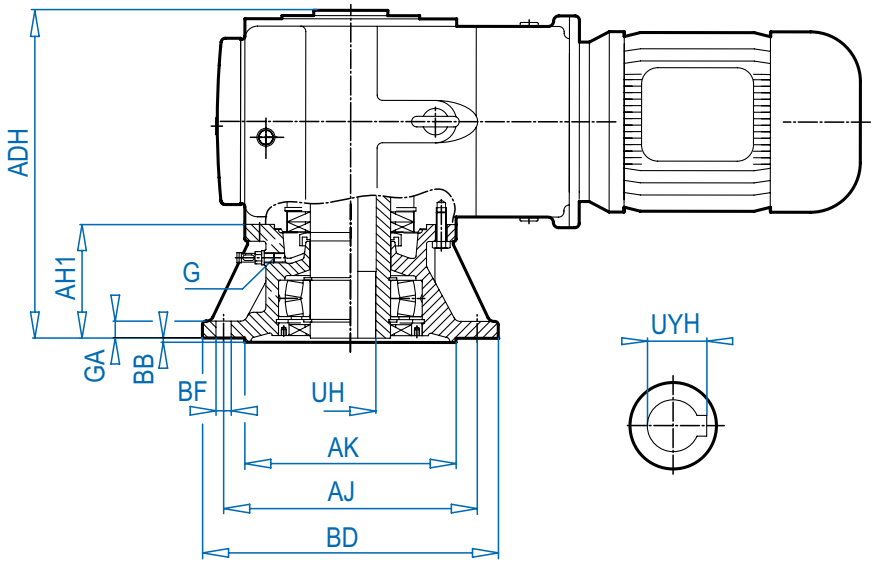

Hollow Shaft

Type	Outline dimensions								Shaft dimensions		
	BD	AK	GA	AJ	BB	AH1	BF	G(mm)	UH	UYH	ADH
SK 9012.1 AF.. SK 9013.1 AF..	7.87	5.118	0.47	6.50	0.14	2.95	0.43	M12 x 1.5	1.375	1.52	8.58
SK 9016.1 AF.. SK 9017.1 AF..	7.87	5.118	0.47	6.50	0.14	2.95	0.43	M12 x 1.5	1.500	1.67	8.58
SK 9022.1 AF.. SK 9023.1 AF..	9.84	7.087	0.63	8.46	0.16	3.39	0.55	M12 x 1.5	1.500	1.67	10.47
SK 9032.1 AF.. SK 9033.1 AF..	11.81	9.055	0.79	10.43	0.16	3.35	0.55	M12 x 1.5	2.000	2.22	11.42
SK 9042.1 AF.. SK 9043.1 AF..	13.78	9.843	0.79	11.81	0.20	5.32	0.71	M24 x 1.5	2.375	2.55	14.25
SK 9052.1 AF.. SK 9053.1 AF..	15.75	11.811	0.87	13.78	0.20	6.54	0.71	M24 x 1.5	2.750	3.04	17.99
SK 9072.1 AF.. SK 9072.1/32 AF.. SK 9072.1/42 AF..	17.72	13.780	0.94	15.75	0.20	7.24	0.71	M24 x 1.5	3.250	3.59	20.63
SK 9082.1 AF.. SK 9082.1/42 AF.. SK 9082.1/52 AF..	21.65	17.717	1.10	19.69	0.20	8.27	0.71	M30 x 2	4.000	4.44	24.21
SK 9086.1 AF.. SK 9086.1/52 AF..	25.98	21.654	1.26	23.62	0.24	10.32	0.87	M30 x 2	4.750	5.30	29.37

Send Quote Requests to info@automatedpt.com
Call +1(800)985-6929 To Order or Order Online At Nordgearmotors.com

DRIVESYSTEMS





Agitator Design Option VL 2 & VL 3 with Solid Shaft

SK ... VFVL2
SK ... VFVL3

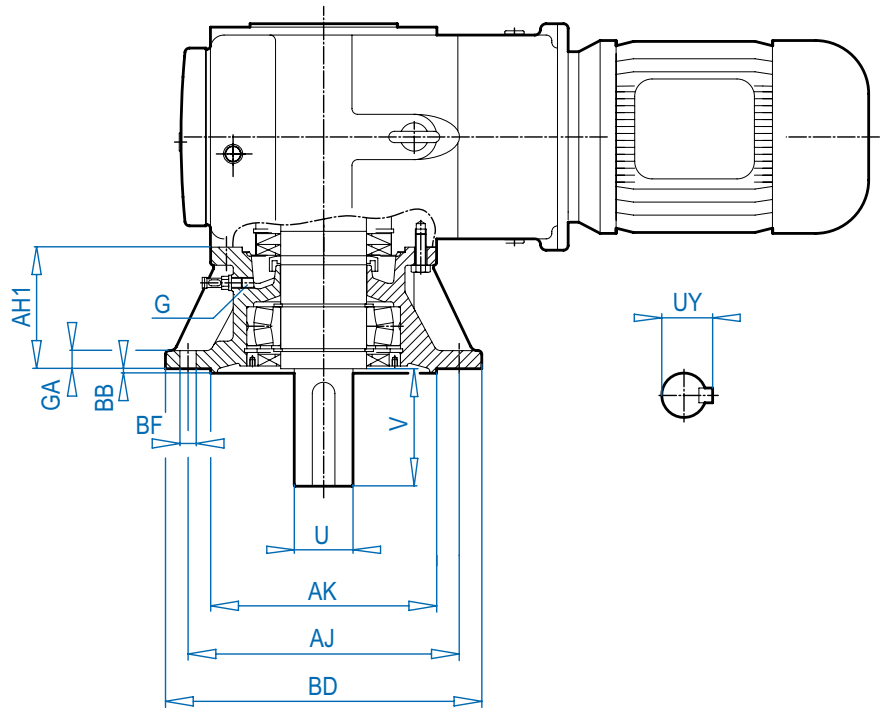

Solid Shaft

DIMENSIONS
Dimensions in Inches

Type	Outline dimensions								Shaft dimensions		
	BD	AK	GA	AJ	BB	AH1	BF	G(mm)	U	V	UY
SK 9012.1 AF.. SK 9013.1 AF..	7.87	5.118	0.47	6.50	0.14	2.95	0.43	M12 x 1.5	1.250	2.36	1.36
SK 9016.1 AF.. SK 9017.1 AF..	7.87	5.118	0.47	6.50	0.14	2.95	0.43	M12 x 1.5	1.375	2.76	1.51
SK 9022.1 AF.. SK 9023.1 AF..	9.84	7.087	0.63	8.46	0.16	3.39	0.55	M12 x 1.5	1.375	2.76	1.51
SK 9032.1 AF.. SK 9033.1 AF..	11.81	9.055	0.79	10.43	0.16	3.35	0.55	M12 x 1.5	1.750	3.54	1.92
SK 9042.1 AF.. SK 9043.1 AF..	13.78	9.843	0.79	11.81	0.20	5.32	0.71	M24 x 1.5	2.375	4.72	2.65
SK 9052.1 AF.. SK 9053.1 AF..	15.75	11.811	0.87	13.78	0.20	6.54	0.71	M24 x 1.5	2.875	5.51	3.20
SK 9072.1 AF.. SK 9072.1/32 AF.. SK 9072.1/42 AF..	17.72	13.780	0.94	15.75	0.20	7.24	0.71	M24 x 1.5	3.625	6.69	4.01
SK 9082.1 AF.. SK 9082.1/42 AF.. SK 9082.1/52 AF..	21.65	17.717	1.10	19.69	0.20	8.27	0.71	M30 x 2	4.375	8.27	4.82
SK 9086.1 AF.. SK 9086.1/52 AF..	25.98	21.654	1.26	23.62	0.24	10.32	0.87	M30 x 2	4.750	8.27	5.30
SK 9092.1 AF.. SK 9092.1/52 AF..	25.98	21.654	1.26	23.62	0.24	10.32	0.87	M30 x 2	5.500	9.84	6.06
SK 9096.1 AF.. SK 9096.1/62 AF.. SK 9096.1/63 AF..	25.98	21.654	1.38	23.62	0.32	11.89	1.02	M30 x 2	7.500	12.60	8.27

Send Quote Requests to info@automatedpt.com
Call +1(800)985-6929 To Order or Order Online At Nordgearmotors.com

Agitator Design Option VL 2 & VL 3 with Shrink Disc




SK ... AFSHVL2
SK ... AFSHVL3

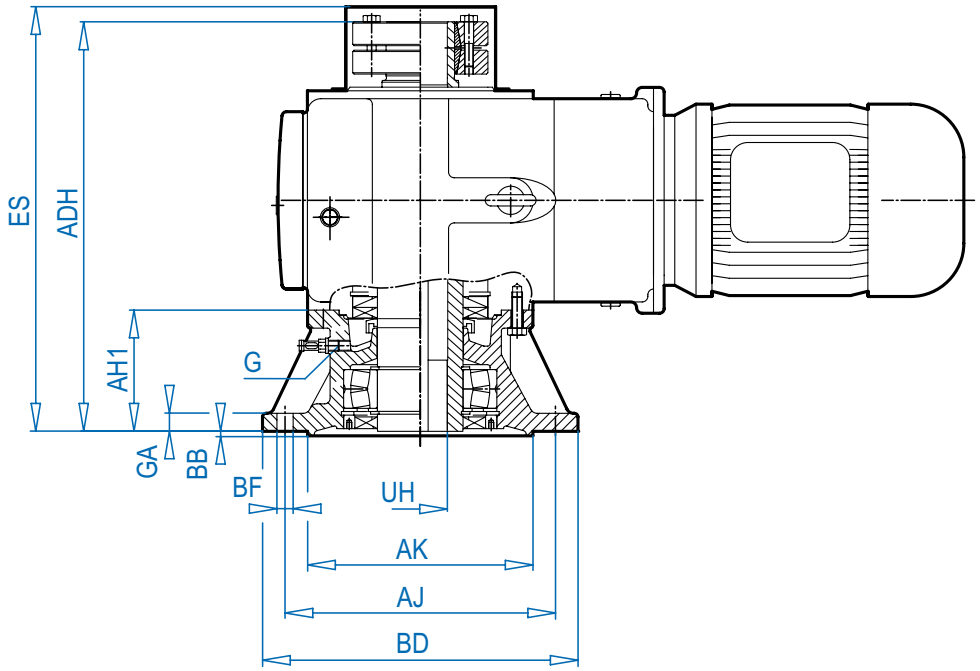

Shrink Disc

Type	Outline dimensions								Shaft dimensions		
	BD	AK	GA	AJ	BB	AH1	BF	G(mm)	ES	UH	ADH
SK 9012.1 AFSH.. SK 9013.1 AFSH..	7.87	5.118	0.47	6.50	0.14	2.95	0.43	M12 x 1.5	10.95	1.375	10.35
SK 9016.1 AFSH.. SK 9017.1 AFSH..	7.87	5.118	0.47	6.50	0.14	2.95	0.43	M12 x 1.5	12.56	1.500	10.35
SK 9022.1 AFSH.. SK 9023.1 AF..	9.84	7.087	0.63	8.46	0.16	3.39	0.55	M12 x 1.5	13.98	1.500	12.44
SK 9032.1 AFSH.. SK 9033.1 AFSH..	11.81	9.055	0.79	10.43	0.16	3.35	0.55	M12 x 1.5	17.56	2.000	14.02
SK 9042.1 AFSH.. SK 9043.1 AFSH..	13.78	9.843	0.79	11.81	0.20	5.32	0.71	M24 x 1.5	21.97	2.375	16.81
SK 9052.1 AFSH.. SK 9053.1 AFSH..	15.75	11.811	0.87	13.78	0.20	6.54	0.71	M24 x 1.5	24.76	2.750	21.10
SK 9072.1 AFSH.. SK 9072.1/32 AF.SH. SK 9072.1/42 AFSH..	17.72	13.780	0.94	15.75	0.20	7.24	0.71	M24 x 1.5	28.90	3.250	23.98
SK 9082.1 AFSH.. SK 9082.1/42 AFSH.. SK 9082.1/52 AFSH..	21.65	17.717	1.10	19.69	0.20	8.27	0.71	M30 x 2	35.12	4.000	27.76
SK 9086.1 AFSH.. SK 9086.1/52 AFSH..	25.98	21.654	1.26	23.62	0.24	10.32	0.87	M30 x 2	39.29	4.750	33.50
SK 9092.1 AFSH.. SK 9092.1/52 AFSH..	25.98	21.654	1.26	23.62	0.24	10.32	0.87	M30 x 2	44.65	5.500	37.60

Send Quote Requests to info@automatedpt.com
Call +1(800)985-6929 To Order or Order Online At Nordgearmotors.com

DRIVESYSTEMS





Hollow Shaft Design
Tapped holes
Option A..

SK ... A

SK 9012.1 - SK 9052.1

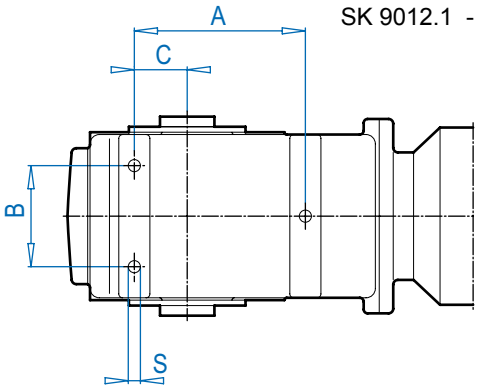

SK 9072.1 - SK 9096.1

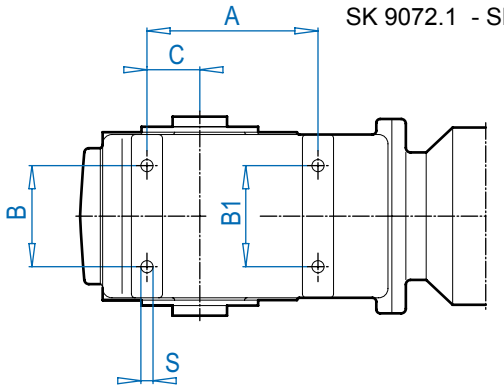

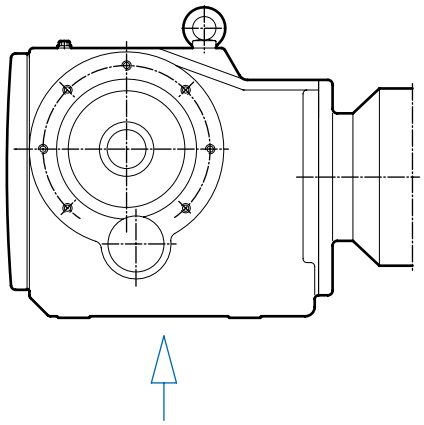

Type **Mounting dimensions**

	A	B	B1	C	S(mm)
SK 9012.1 A.. **SK 9013.1 A..**	5.98	2.36	NA	1.81	M10 x 16
SK 9016.1 A.. **SK 9017.1 A..**	5.98	2.36	NA	1.81	M10 x 16
SK 9022.1 A.. **SK 9023.1 A..**	5.98	3.94	NA	1.65	M12 x 20
SK 9032.1 A.. **SK 9033.1 A..**	7.48	4.33	NA	2.17	M12 x 20
SK 9042.1 A.. **SK 9043.1 A..**	8.66	5.12	NA	2.68	M16 x 25
SK 9052.1 A.. **SK 9053.1 A..**	10.91	7.28	NA	3.62	M16 x 25
SK 9072.1 A.. **SK 9072.1/32 A..** **SK 9072.1/42 A..**	11.42	7.48	7.48	3.94	M24 x 36
SK 9082.1 A.. **SK 9082.1/42 A..** **SK 9082.1/52 A..**	16.93	10.24	10.24	5.51	M24 x 36
SK 9086.1 A.. **SK 9086.1/52 A..**	16.93	12.60	12.60	6.30	M36 x 58
SK 9092.1 A.. **SK 9092.1/52 A..**	20.47	15.75	15.75	7.09	M36 x 58
SK 9096.1 A.. **SK 9096.1/62 A..** **SK 9096.1/63 A..**	22.83	17.32	17.32	8.66	M42 x 71

Send Quote Requests to info@automatedpt.com
Call +1(800)985-6929 To Order or Order Online At Nordgearmotors.com

Send Quote Requests to info@automatedpt.com
Call +1(800)985-6929 To Order or Order Online At Nordgearmotors.com

Solid Shaft Dimensions

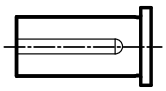

DRIVESYSTEMS

Solid Shaft Dimensions (VF/VZ)

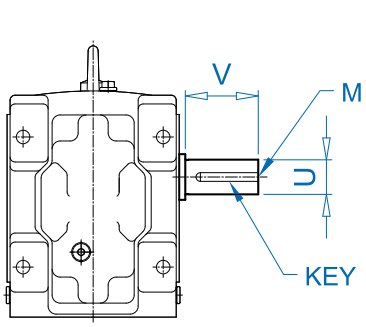

FOOTED

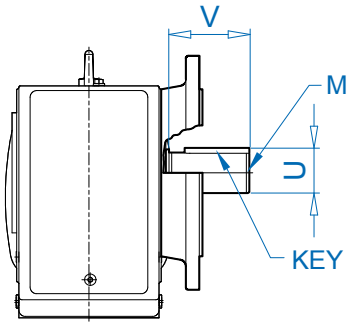

VF

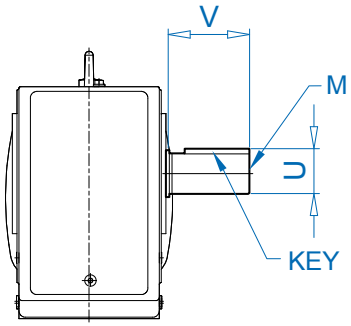

VZ

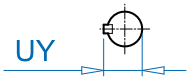

DIMENSIONS — Dimensions in Inches

UNIT	U	Diameter Tolerance	V	UY	KEY SIZE	KEY QTY	DRILL & TAP M
SK 92072	0.750	+0.0000 / -0.0005	1.50	0.83	3/16 x 3/16 x 1-1/4	1	1/4-20
	20mm	+0.015 / +0.002mm	40mm	22.5mm	6 x 6 x 32mm	1	M6
SK 92172	0.750	+0.0000 / -0.0005	1.50	0.83	3/16 x 3/16 x 1	1	1/4-20
	20mm	+0.015 / +0.002mm	40mm	22.5mm	6 x 6 x 32mm	1	M6
SK 92372	1.000	+0.0000 / -0.0005	2.13	1.11	1/4 x 1/4 x 1-5/8	1	3/8-16
	25mm	+0.015 / +0.002mm	50mm	28.0mm	8 x 7 x 40mm	1	M10
SK 92672	1.250	+0.0000 / -0.0005	2.75	1.36	1/4 x 1/4 x 2-1/4	1	1/2-13
	30mm	+0.015 / +0.002mm	60mm	33.0mm	8 x 7 x 50mm	1	M10
SK 92772	1.375	+0.0000 / -0.0005	3.00	1.51	5/16 x 5/16 x 2-1/2	1	5/8-11
	35mm	-0.018 / +0.002mm	70mm	38.0mm	10 x 8 x 56mm	1	M12
SK 9012.1	1.250	+0.0000 / -0.0005	2.36	1.36	1/4 x 1/4 x 2	1	1/2-13
SK 9013.1	30mm	+0.015 / +0.002mm	60mm	33.0mm	8 x 7 x 50mm	1	M10
SK 9016.1	1.375	+0.0000 / -0.0005	2.76	1.52	5/16 x 5/16 x 2-1/8	1	5/8-11
SK 9017.1	35mm	-0.018 / +0.002mm	70mm	38.0mm	10 x 8 x 56mm	1	M12
SK 9022.1	1.375	+0.0000 / -0.0005	2.76	1.52	5/16 x 5/16 x 2-1/8	1	5/8-11
SK 9023.1	35mm	-0.018 / +0.002mm	70mm	38.0mm	10 x 8 x 56mm	1	M12
SK 9032.1	1.750	+0.0000 / -0.0005	3.54	1.92	3/8 x 3/8 x 2-3/4	1	5/8-11
SK 9033.1	45mm	-0.018 / +0.002mm	90mm	48.5mm	14 x 9 x 80mm	1	M16
SK 9042.1	2.375	+0.0000 / -0.0010	4.72	2.65	5/8 x 5/8 x 3-1/4	1	3/4-10
SK 9043.1	60mm	+0.030 / +0.011mm	120mm	64.0mm	18 x 11 x 100mm	1	M20
SK 9052.1	2.875	+0.0000 / -0.0010	5.51	3.20	3/4 x 3/4 x 4-1/2	1	3/4-10
SK 9053.1	70mm	+0.030 / +0.011mm	140mm	74.5mm	20 x 12 x 110mm	1	M20
SK 9072.1	3.625	+0.0000 / -0.0010	6.69	4.01	7/8 x 7/8 x 5-1/2	1	1-8
SK 9073.1	90mm	+0.035 / +0.013mm	170mm	95.0mm	25 x 14 x 140mm	1	M24
SK 9082.1	4.375	+0.0000 / -0.0010	8.27	4.82	1 x 1 x 7-1/4	1	1-8
	110mm	+0.035 / +0.013mm	210mm	116mm	28 x 16 x 180mm	1	M24
SK 9086.1	4.750	+0.0000 / -0.0010	8.27	5.30	1-1/4 x 1-1/4 x 7-1/4	1	1-8
	120mm	+0.035 / +0.013mm	210mm	127mm	32 x 18 x 180mm	1	M24
SK 9092.1	5.500	+0.0000 / -0.0010	9.84	6.06	1-1/4 x 1-1/4 x 8-3/8	1	1-8
	140mm	+0.040 / +0.015mm	250mm	148mm	36 x 20 x 220mm	1	M24
SK 9096.1	7.500	+0.0000 / -0.0010	12.60	7.87	1-1/4 x 1-1/4 x 10	1	1 1/4 - 7 x 3.15
	190mm	+0.046 / +0.017mm	320mm	200mm	36 x 20 x 220mm	1	M30

- Dimensions are in inches unless otherwise noted.
- Metric Keys are captured in keyways.
- For shaft sizes not shown, consult NORD.

Send Quote Requests to info@automatedpt.com
Call +1(800)985-6929 To Order or Order Online At Nordgearmotors.com

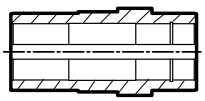

Hollow Shaft Dimensions (AZ-AF)

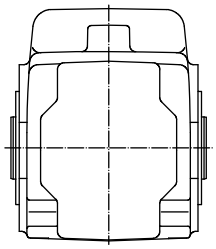

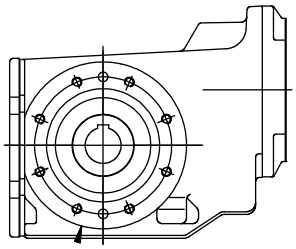

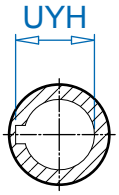

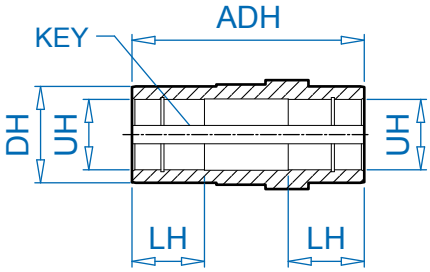

TYPE	UH	DIAMETER TOLERANCE	ADH	LH	DH	UYH	KEY SIZE w x h x l	KEY QTY
SK 92072 AZ/AF	0.750*	+0.0010 / -0.0000	4.57	0.98	1.38	0.84	3/16 x 3/16 x 2	2
	0.500	+0.0010 / -0.0000	4.57	0.98	1.38	0.56	1/8 x 1/8 x 7/8	2
	25mm	+0.021 / -0.000mm	116mm	30mm	35mm	28.3mm	8 x7 x 25mm	2
SK 92172 AZ/AF	1.000*	+0.0010 / -0.0000	5.43	1.18	1.57	1.09	1/4 x 3/16 x 2	2
	25mm	+0.021 / -0.000mm	138mm	30mm	40mm	28.3mm	8 x7 x 32mm	2
SK 92372 AZ/AF	1.1875*	+0.0010 / -0.0000	6.46	1.97	1.97	1.30	1/4 x 1/4 x 2-1/4	2
	1.250	+0.0010 / -0.0000	6.46	1.97	1.97	1.37	1/4 x 1/4 x 2-1/4	2
	1.4375	+0.0010 / -0.0000	6.46	1.97	1.97	1.61	3/8 x 3/8 x 2-1/2	2
	30mm	+0.021 / -0.000mm	164mm	50mm	50mm	33.3mm	8 x 7 x 60mm	2
SK 92672 AZ/AF	1.375*	+0.0010 / -0.0000	6.69	2.36	2.17	1.52	5/16 x 5/16 x 2-1/2	2
	1.4375	+0.0010 / -0.0000	6.69	2.36	2.17	1.61	3/8 x 3/8 x 2-1/2	2
	1.500	+0.0010 / -0.0000	6.69	2.36	2.17	1.67	3/8 x 3/8 x 2-1/2	2
	35mm	+0.025 / -0.000mm	170mm	55mm	60mm	38.3mm	10 x 8 x 60mm	2
SK 92772 AZ/AF	1.500*	+0.0010 / -0.0000	7.56	2.36	2.17	1.67	3/8 x 3/8 x 2-1/4	2
	1.4375	+0.0010 / -0.0000	7.56	2.36	2.17	1.61	3/8 x 3/8 x 2-1/4	2
	40mm	+0.025 / -0.000mm	192mm	60mm	55mm	43.3mm	12 x 8 x 60mm	2

* standard size

- Dimensions are in inches unless otherwise noted.
- For shaft sizes not shown, consult NORD.

Send Quote Requests to info@automatedpt.com
Call +1(800)985-6929 To Order or Order Online At Nordgearmotors.com

Hollow Shaft Dimensions

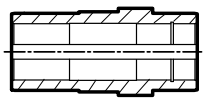

DRIVESYSTEMS

Hollow Shaft Dimensions (AZ-AF)

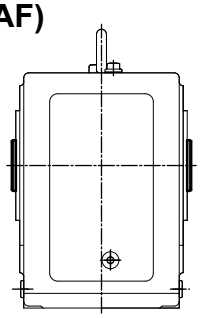

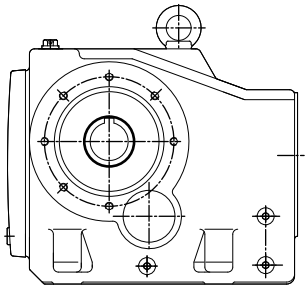

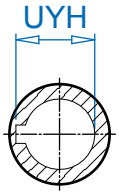

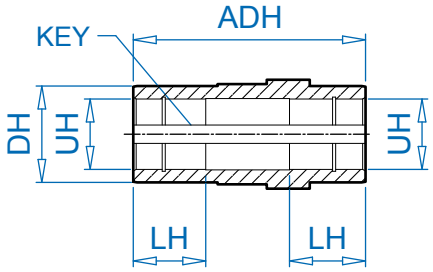

DIMENSIONS — Dimensions in Inches

TYPE	UH	DIAMETER TOLERANCE	ADH	LH	DH	UYH	KEY SIZE w x h x l	KEY QTY
SK 9012.1 AZ/AF	1.375*	+0.0010 / -0.0000	5.83	1.97	1.97	1.52	5/16 x 5/16 x 2	2
SK 9013.1 AZ/AF	1.4375	+0.0010 / -0.0000	5.83	1.97	1.97	1.61	3/8 x 3/8 x 2	2
	1.250	+0.0010 / -0.0000	5.83	1.97	1.97	1.37	1/4 x 1/4 x 2	2
	35mm	+0.025 / -0.000mm	148mm	50mm	50mm	38.3mm	10 x 8 x 60mm	2
SK 9016.1 AZ/AF	1.375	+0.0010 / -0.0000	5.83	1.97	1.97	1.52	5/16 x 5/16 x 2	2
SK 9017.1 AZ/AF	1.500*	+0.0010 / -0.0000	5.83	1.97	1.97	1.61	3/8 x 1/4 x 2	2
	1.4375	+0.0010 / -0.0000	5.83	1.97	1.97	1.61	3/8 x 3/8 x 2	2
	1.250	+0.0010 / -0.0000	5.83	1.97	1.97	1.37	1/4 x 1/4 x 2	2
	35mm	+0.025 / -0.000mm	148mm	50mm	50mm	38.3mm	10 x 8 x 60mm	2
	40mm	+0.025 / -0.000mm	148mm	50mm	50mm	42.2mm	12 x 7 x 60mm	2
SK 9022.1 AZ/AF	1.500*	+0.0010 / -0.0000	7.09	2.36	2.17	1.67	3/8 x 3/8 x 2-1/4	2
SK 9023.1 AZ/AF	1.4375	+0.0010 / -0.0000	7.09	2.36	2.17	1.61	3/8 x 3/8 x 2-1/4	2
	40mm	+0.025 / -0.000mm	180mm	60mm	55mm	43.3mm	12 x 8 x 60mm	2
SK 9032.1 AZ/AF	2.000*	+0.0012 / -0.0000	8.27	2.76	2.76	2.22	1/2 x 1/2 x 2-3/4	2
SK 9033.1 AZ/AF	1.9375	+0.0012 / -0.0000	8.27	2.76	2.76	2.16	1/2 x 1/2 x 2-3/4	2
	1.6875	+0.0012 / -0.0000	8.27	2.76	2.76	1.86	3/8 x 3/8 x 2-3/4	2
	50mm	+0.025 / -0.000mm	210mm	70mm	70mm	53.8mm	14 x 9 x 70mm	2
SK 9042.1 AZ/AF	2.375*	+0.0012 / -0.0000	9.45	3.15	3.15	2.56	5/8 x 7/16 x 3	2
SK 9043.1 AZ/AF	2.4375	+0.0012 / -0.0000	9.45	3.15	3.15	2.62	5/8 x 7/16 x 3	2
	2.1875	+0.0012 / -0.0000	9.45	3.15	3.15	2.41	1/2 x 1/2 x 3	2
	60mm	+0.030 / -0.000mm 2	40mm	80mm	80mm	64.4mm	18 x 11 x 80mm	2
SK 9052.1 AZ/AF	2.750*	+0.0012 / -0.0000	11.81	3.94	3.94	3.03	5/8 x 5/8 x 4	2
SK 9053.1 AZ/AF	2.9375	+0.0012 / -0.0000	11.81	3.94	3.94	3.14	3/4 x 1/2 x 4-1/2	2
	70mm	+0.030 / -0.000mm	300mm	100mm	100mm	74.9mm	20 x 12 x 100mm	2
SK 9072.1 AZ/AF	3.250*	+0.0012 / -0.0000 1	3.78	4.72	4.72	3.59	3/4 x 3/4 x 4-3/4	2
	2.9375	+0.0012 / -0.0000	13.78	4.72	4.72	3.14	3/4 x 1/2 x 4-1/2	2
	2.750	+0.0012 / -0.0000	13.78	4.72	4.72	3.03	5/8 x 5/8 x 4-1/2	2
	3.4375	+0.0014 / -0.0000	13.78	4.72	4.72	3.82	7/8 x 7/8 x 4-3/4	2
	3.625	+0.0014 / -0.0000	13.78	4.72	4.72	4.01	7/8 x 7/8 x 4-3/4	2
	80mm	+0.030 / -0.000mm	350mm	120mm	120mm	85.4mm	22 x 14 x 110mm	2
	90mm	+0.035 / -0.000mm	350mm	120mm	120mm	95.4mm	25 x 14 x 140mm	2
SK 9082.1 AZ/AF	4.000*	+0.0014 / -0.0000	16.54	5.51	5.51	4.44	1 x 1 x 4-1/2	2
	3.9375	+0.0014 / -0.0000	16.54	5.51	5.51	4.38	1 x 1 x 4-1/2	2
	4.4375	+0.0014 / -0.0000	16.54	5.51	5.51	4.76	1 x 3/4 x 6	2
	110mm	+0.035 / -0.000mm	420mm	140mm	140mm	116.4mm	28 x 16 x 120mm	2
SK 9086.1 AZ/AF	4.500	+0.0014 / -0.0000	19.69	6.30	6.30	4.95	1 x 1 x 6-1/2	2
	4.750*	+0.0014 / -0.0000	19.69	6.30	6.30	5.30	1-1/4 x 1-1/4 x 6-1/2	2
	120mm	+0.035 / -0.000mm	500mm	160mm	160mm	127.4mm	32 x 18 x 150mm	2
SK 9092.1 AZ/AF	5.500	+0.0016 / -0.0000	24.02	6.50	7.87	6.06	1-1/4 x 1-1/4 x 7	2
	150mm	+0.040 / -0.000mm	610mm	186mm	200mm	158.4mm	36 x 20 x 180	2
SK 9096.1 AZ/AF	6.000	+0.0016 / -0.0000	26.54	7.09	7.87	6.41	1-1/2 x 1 x 7	2
	160mm	+0.040 / -0.000mm	674mm	180mm	200mm	169.4mm	40 x 22 x 180	2

* standard size: • Dimensions are in inches unless otherwise noted. • For shaft sizes not shown, consult NORD.

Send Quote Requests to info@automatedpt.com
Call +1(800)985-6929 To Order or Order Online At Nordgearmotors.com

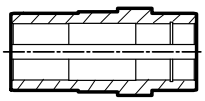

Hollow Shaft Dimensions

Hollow Shaft Foot Mount Dimensions (AX)

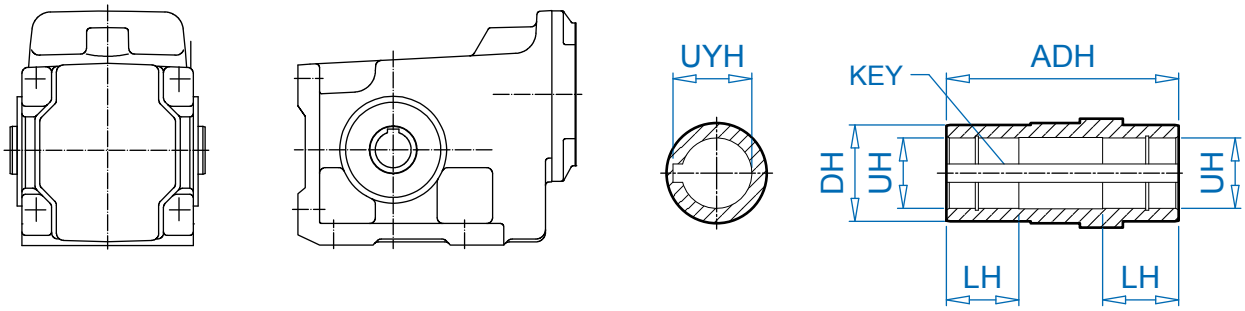

TYPE	UH	DIAMETER TOLERANCE	ADH	LH	DH	UYH	KEY SIZE w x h x l	KEY QTY
SK 92072 AX	0.750*	+0.0010 / -0.0000	4.57	0.98	1.38	0.84	3/16 x 3/16 x 2	2
	0.500	+0.0010 / -0.0000	4.57	0.98	1.38	0.56	1/8 x 1/8 x 7/8	2
	25mm	+0.021 / -0.000mm	116mm	30mm	35mm	28.3mm	8 X 7 x 25mm	2
SK 92172 AX	0.750	+0.0010 / -0.0000	5.28	1.18	1.38	0.84	3/16 x 3/16 x 2	2
	20mm	+0.021 / -0.000mm	134	40	35	22.8	6 x 6 x 50mm	2
SK 92372 AX	1.1875*	+0.0010 / -0.0000	6.46	1.97	1.97	1.30	1/4 x 1/4 x 2-1/4	2
	1.250	+0.0010 / -0.0000	6.46	1.97	1.97	1.37	1/4 x 1/4 x 2-1/4	2
	1.4375	+0.0010 / -0.0000	6.46	1.97	1.97	1.61	3/8 x 3/8 x 2-1/2	2
	30mm	+0.021 / -0.000mm	164mm	50mm	50mm	33.3mm	8 x 7 x 60mm	2
SK 92672 AX	1.375*	+0.0010 / -0.0000	6.69	2.36	2.17	1.52	5/16 x 5/16 x 2-1/2	2
	1.4375	+0.0010 / -0.0000	6.69	2.36	2.17	1.61	3/8 x 3/8 x 2-1/2	2
	1.500	+0.0010 / -0.0000	6.69	2.36	2.17	1.67	3/8 x 3/8 x 2-1/2	2
	35mm	+0.025 / -0.000mm	170mm	60mm	55mm	38.3mm	10 x 8 x 60mm	2
SK 92772 AX	1.500*	+0.0010 / -0.0000	7.56	2.36	2.17	1.67	3/8 x 3/8 x 2-1/4	2
	1.4375	+0.0010 / -0.0000	7.56	2.36	2.17	1.61	3/8 x 3/8 x 2-1/4	2
	40mm	+0.025 / -0.000mm	192mm	60mm	55mm	43.3mm	12 x 8 x 60mm	2

* standard size

- Dimensions are in inches unless otherwise noted.
- For shaft sizes not shown, consult NORD.

Send Quote Requests to info@automatedpt.com
Call +1(800)985-6929 To Order or Order Online At Nordgearmotors.com

Hollow Shaft Dimensions

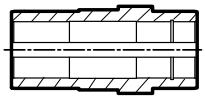

Hollow Shaft Foot Mount Dimensions (AX)

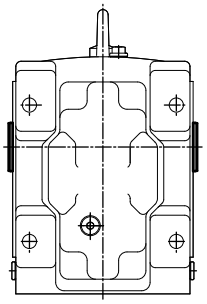

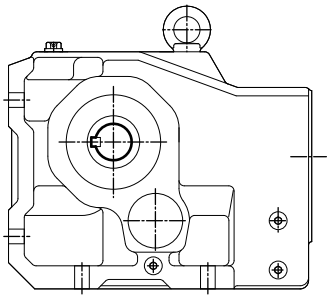

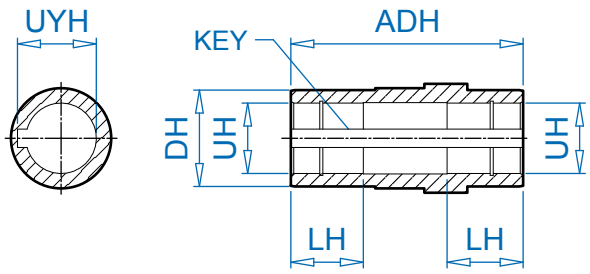

DIMENSIONS — Dimensions in Inches

TYPE	UH	DIAMETER TOLERANCE	ADH	LH	DH	UYH	KEY SIZE w x h x l	KEY QTY
SK 9012.1 AX	1.1875*	+0.0010 / -0.0000	5.83	1.97	1.77	1.30	1/4 x 1/4 x 2	2
SK 9013.1 AX	1.250	+0.0010 / -0.0000	5.83	1.97	1.77	1.37	1/4 x 1/4 x2	2
	30mm	+0.021 / -0.000mm	148mm	50mm	45mm	33.3mm	8 x 7 x 60mm	2
SK 9016.1 AX	1.1875*	+0.0010 / -0.0000	5.83	1.97	1.77	1.30	1/4 x 1/4 x 2	2
SK 9017.1 AX	1.250	+0.0010 / -0.0000	5.83	1.97	1.77	1.37	1/4 x 1/4 x 2	2
	30mm	+0.021 / -0.000mm	148mm	50mm	45mm	33.3mm	8 x 7 x 60mm	2
SK 9022.1 AX	1.375	+0.0010 / -0.0000	7.09	2.36	1.97	1.53	5/16 x 5/16 x 2-1/2	2
SK 9023.1 AX	35mm	+0.025 / -0.000mm	180mm	60mm	50mm	38.3mm	10 x 8 x 60mm	2
SK 9032.1 AX	1.500*	+0.0010 / -0.0000	8.27	2.76	2.17	1.67	3/8 x 3/8 x 2-3/4	2
SK 9033.1 AX	1.4375	+0.0010 / -0.0000	8.27	2.76	2.17	1.61	3/8 x 3/8 x 2-3/4	2
	40mm	+0.025 / -0.000mm	210mm	70mm	55mm	43.3mm	12 x 8 x 70mm	2
SK 9042.1 AX	2.000*	+0.0012 / -0.0000	9.45	3.15	2.76	2.22	1/2 x 1/2 x 3	2
SK 9043.1 AX	1.9375	+0.0012 / -0.0000	9.45	3.15	2.76	2.16	1/2 x 1/2 x 3	2
	50mm	+0.025 / -0.000mm	240mm	80mm	70mm	53.8mm	14 x 9 x 80mm	2
SK 9052.1 AX	2.375*	+0.0012 / -0.0000	11.81	3.94	3.35	2.65	5/8 x 5/8 x 4	2
SK 9053.1 AX	2.4375	+0.0012 / -0.0000	11.81	3.94	3.35	2.62	5/8 x 7/16 x 4	2
	60mm	+0.030 / -0.000mm	300mm	100mm	85mm	64.4mm	18 x 11 x 80mm	2
SK 9072.1 AX	3.250*	+0.0012 / -0.0000	13.78	4.72	4.72	3.59	3/4 x 3/4 x 4-3/4	2
	2.9375	+0.0012 / -0.0000	13.78	4.72	4.72	3.14	3/4 x 1/2 x 41/2	2
	2.750	+0.0012 / -0.0000	13.78	4.72	4.72	3.03	5/8 x 5/8 x 4-1/2	2
	3.4375	+0.0014 / -0.0000	13.78	4.72	4.72	3.82	7/8 x 7/8 x 4-3/4	2
	3.625	+0.0014 / -0.0000	13.78	4.72	4.72	4.01	7/8 x 7/8 x 4-3/4	2
	90mm	+0.035 / -0.000mm	350mm	120mm	120mm	95.4mm	22 x 14 x 120mm	2
SK 9082.1 AX	4.000*	+0.0014 / -0.0000	16.54	5.51	5.12	4.44	1 x 1 x 5-1/2	2
	3.9375	+0.0014 / -0.0000	16.54	5.51	5.12	4.25	1 x 3/4 x 6	2
	100mm	+0.035 / -0.000mm	420mm	140mm	130mm	106.4mm	28 x 16 x 135mm	2
SK 9086.1 AX	4.375*	+0.0014 / -0.0000	19.69	6.30	5.51	4.69	1 x 3/4 x 6	2
	4.4375	+0.0014 / -0.0000	19.69	6.30	5.51	4.76	1 x 3/4 x 6	2
	110mm	+0.035 / -0.000mm	500mm	160mm	140mm	116.4mm	28 x 16 x 180mm	2

* standard size

- Dimensions are in inches unless otherwise noted.
- For shaft sizes not shown, consult NORD.

Send Quote Requests to info@automatedpt.com
Call +1(800)985-6929 To Order or Order Online At Nordgearmotors.com

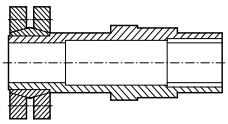

Shrink Disc Shaft Dimensions

Shrink Disc Shaft Dimensions (AZSH)

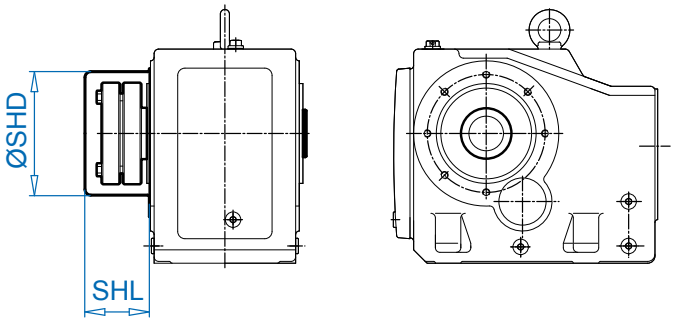

BEVEL (AZSH)

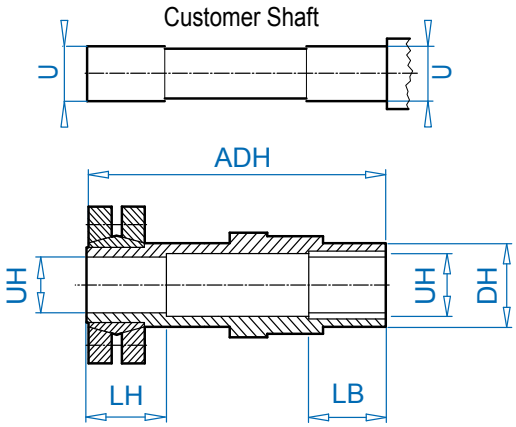

Type	HOLLOW SHAFT		ADH	LB	LH	DH	CUSTOMER SHAFT	
	UH	TOLERANCE					U	TOLERANCE
SK 92072 AZSH	1.000	+0.0008 / -0.0000	5.67	1.22	1.26	1.38	1.000	+0.0000 / -0.0005
	25mm	+0.021 / -0.000mm	144mm	31mm	32mm	35mm	25 mm	+0.000 / -0.013mm
SK 92172 AZSH	1.000	+0.0008 / -0.0000	6.69	1.22	1.38	1.57	1.000	+0.0000 / -0.0005
	25mm	+0.021 / -0.000mm	170mm	31mm	35mm	40mm	25mm	+0.000 / -0.013mm
SK 92372 AZSH	1.1875	+0.0009 / -0.0000	7.87	1.24	1.42	1.97	1.1875	+0.0000 / -0.0006
	30mm	+0.021 / -0.000mm	200mm	31.5mm	36mm	50mm	30 mm	+0.000 / -0.013mm
SK 92672 AZSH	1.375	+0.0009 / -0.0000	8.27	1.63	1.57	2.17	1.375	+0.0000 / -0.0006
	35mm	+0.025 / -0.000mm	210mm	41.5mm	40mm	55mm	35 mm	+0.000 / -0.016mm
SK 92772 AZSH	1.500	+0.0009 / -0.0000	9.37	1.63	1.73	2.17	1.500	+0.0000 / -0.0006
	40mm	+0.025 / -0.000mm	238mm	41.5mm	44mm	55mm	40 mm	+0.000 / -0.016mm
SK 9012.1 AZSH	1.375	+0.0009 / -0.0000	7.40	1.63	1.57	1.97	1.375	+0.0000 / -0.0006
SK 9013.1 AZSH	35mm	+0.025 / -0.000mm	188mm	41.5mm	40mm	50mm	35mm	+0.000 / -0.016mm
SK 9016.1 AZSH	1.500	+0.0009 / -0.0000	7.40	1.57	1.57	1.97	1.500	+0.0000 / -0.0006
SK 9017.1 AZSH	40mm	+0.025 / -0.000mm	188mm	41.5mm	40mm	50mm	40mm	+0.000 / -0.016mm
SK 9022.1 AZSH	1.500	+0.0009 / -0.0000	8.90	1.63	1.73	2.17	1.500	+0.0000 / -0.0006
SK 9023.1 AZSH	40mm	+0.025 / -0.000mm	226mm	41.5mm	44mm	55mm	40mm	+0.000 / -0.016mm
SK 9032.1 AZSH	2.000	+0.0011 / -0.0000	10.24	2.03	1.81	2.76	2.000	+0.0000 / -0.0007
SK 9033.1 AZSH	50mm	+0.025 / -0.000mm	260mm	52mm	46mm	70mm	50mm	+0.000 / -0.016mm
SK 9042.1 AZSH	2.375	+0.0011 / -0.0000	12.01	2.44	2.28	3.15	2.375	+0.0000 / -0.0007
SK 9043.1 AZSH	60mm	+0.030 / -0.000mm	305mm	62mm	58mm	80mm	60mm	+0.000 / -0.019mm
SK 9052.1 AZSH	2.750	+0.0011 / -0.0000	14.96	2.83	2.91	3.94	2.750	+0.0000 / -0.0007
SK 9053.1 AZSH	70mm	+0.030 / -0.000mm	380mm	72mm	74mm	100mm	70mm	+0.000 / -0.019mm
SK 9072.1 AZSH	3.250	+0.0013 / -0.0000	16.93	3.23	3.23	4.72	3.250	+0.0000 / -0.0008
	95mm	+0.035 / -0.000mm	430mm	82mm	82mm	120mm	95mm	+0.000 / -0.022mm
SK 9082.1 AZSH	4.000	+0.0013 / -0.0000	19.69	3.27	2.91	5.51	4.000	+0.0000 / -0.0008
	110mm	+0.035 / -0.000mm	500mm	83mm	74mm	140mm	110mm	+0.000 / -0.022mm
SK 9086.1 AZSH	4.750	+0.0015 / -0.0000	23.70	3.27	3.86	6.30	4.750	+0.0000 / -0.0009
	125mm	+0.040 / -0.000mm	602mm	83mm	98mm	160mm	125mm	+0.000 / -0.025mm
SK 9092.1 AZSH	5.500	+0.0015 / -0.0000	27.95	4.06	3.86	7.87	5.500	+0.0000 / -0.0009
	150mm	+0.040 / -0.000mm	710mm	104mm	98mm	200mm	150 mm	+0.000 / -0.025mm
SK 9096.1 AZSH	6.00/6.250*	+0.0015 / -0.0000	31.65	3.74	5.08	7.87	6.00/6.250	+0.0000 / -0.0009
	155/160mm*	+0.040 / -0.000mm	804mm	95mm	129mm	200mm	155/160mm	+0.000 / -0.025mm

* Non-shrink disc side diameter larger for clearance.

Send Quote Requests to info@automatedpt.com
Call +1(800)985-6929 To Order or Order Online At Nordgearmotors.com

Shrink Disc Shaft Dimensions

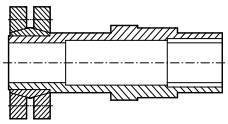

Heavy Duty Shrink Disc Shaft Dimensions (AZVSH)

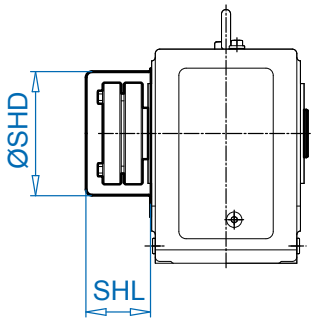

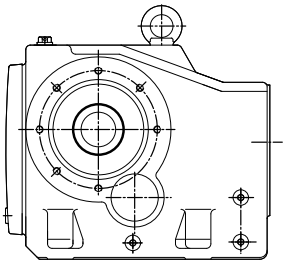

BEVEL (AZSH)

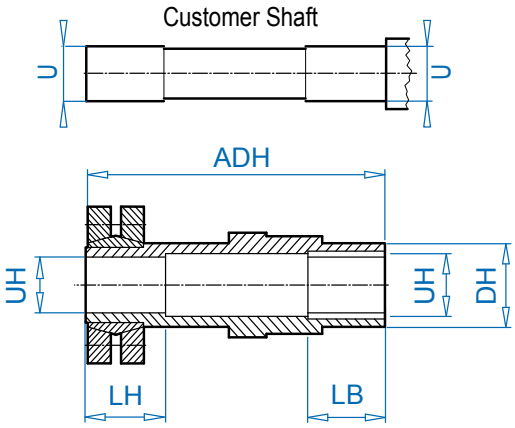

DIMENSIONS — Dimensions in Inches

TYPE	HOLLOW SHAFT		ADH	LB	LH	DH	CUSTOMER SHAFT	
	UH	TOLERANCE					U	TOLERANCE
SK 9072.1 AZVSH	3.250	+0.0013 / -0.0000	18.27	3.23	4.33	4.72	3.250	+0.0000 / -0.0008
	85mm	+0.035 / -0.000mm	464mm	82mm	110mm	120mm	85mm	+0.000 / -0.022mm
	95mm	+0.035 / -0.000mm	464mm	82mm	110mm	120mm	95mm	+0.000 / -0.022mm
SK 9082.1 AZVSH	4.375	+0.0013 / -0.0000	23.11	3.27	6.30	5.51	4.375	+0.0000 / -0.0008
	110mm	+0.035 / -0.000mm	587mm	83mm	160mm	140mm	110mm	+0.000 / -0.022mm
SK 9086.1 AZVSH	4.750	+0.0015 / -0.0000	26.54	3.27	6.69	6.30	4.750	+0.0000 / -0.0009
	130mm	+0.040 / -0.000mm	674mm	83mm	170mm	160mm	130mm	+0.000 / -0.025mm
SK 9092.1 AZVSH	5.500	+0.0015 / -0.0000	29.69	4.06	5.12	7.87	5.500	+0.0000 / -0.0009
	150mm	+0.040 / -0.000mm	754mm	104mm	130mm	200mm	150mm	+0.000 / -0.025mm
SK 9096.1 AZVSH	6.000/6.250*	+0.0015 / -0.0000	35.59	3.74	9.02	7.87	6.00/6.250	+0.0000 / -0.0009
	155/160mm*	+0.040 / -0.000mm	904mm	95mm	229mm	200mm	155/160mm	+0.000 / -0.025mm

* Non-shrink disc side diameter larger for clearance.

Send Quote Requests to info@automatedpt.com
Call +1(800)985-6929 To Order or Order Online At Nordgearmotors.com

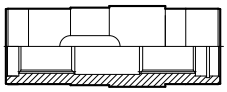

Splined Hollow Shaft Dimensions

Splined Hollow Shaft Dimensions (EA)

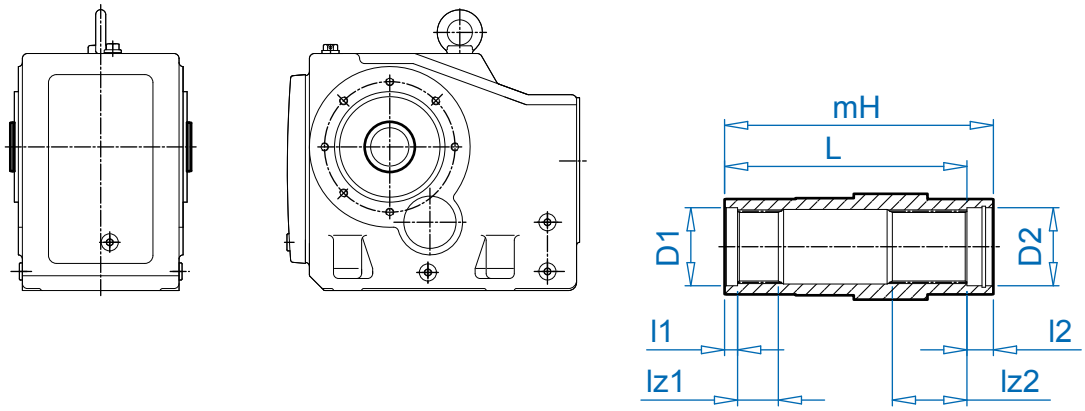

Type	HUB PROFILE DIN 5480 [mm]	l1 [mm]	l2 [mm]	lz1 [mm]	lz2 [mm]	mH [mm]	D1 / D2 [mm]	L * [mm]
SK 9012.1 EA	N30 x 1.25 x 30 x 22 x 9H	28	28	35	35	148	35	120
SK 9016.1 EA	N30 x 1.25 x 30 x 22 x 9H	28	28	35	35	148	35	120
SK 9022.1 EA	N40 x 2 x 30 x 18 x 9H	25	25	42	42	180	40.5	155
SK 9032.1 EA	N50 x 2 x 30 x 24 x 9H	23	23	49	49	210	55	187
SK 9042.1 EA	N65 x 2 x 30 x 31 x 9H	25	25	58	58	240	70	215
SK 9052.1 EA	N70 x 2 x 30 x 34 x 9H	25	25	72	72	300	75	275
SK 9072.1 EA	N85 x 3 x 30 x 27 x 9H	26	26	100	100	350	86	324
SK 9082.1 EA	N105 x 3 x 30 x 34 x 9H	60	60	90	90	420	110	360
SK 9086.1 EA	N130 x 5 x 30 x 24 x 9H	60	60	110	110	500	135	440
SK 9092.1 EA	N140 x 3 x 30 x 45 x 9H	60	60	120	120	610	150	550

Send Quote Requests to info@automatedpt.com
Call +1(800)985-6929 To Order or Order Online At Nordgearmotors.com

Fixing Element Kit





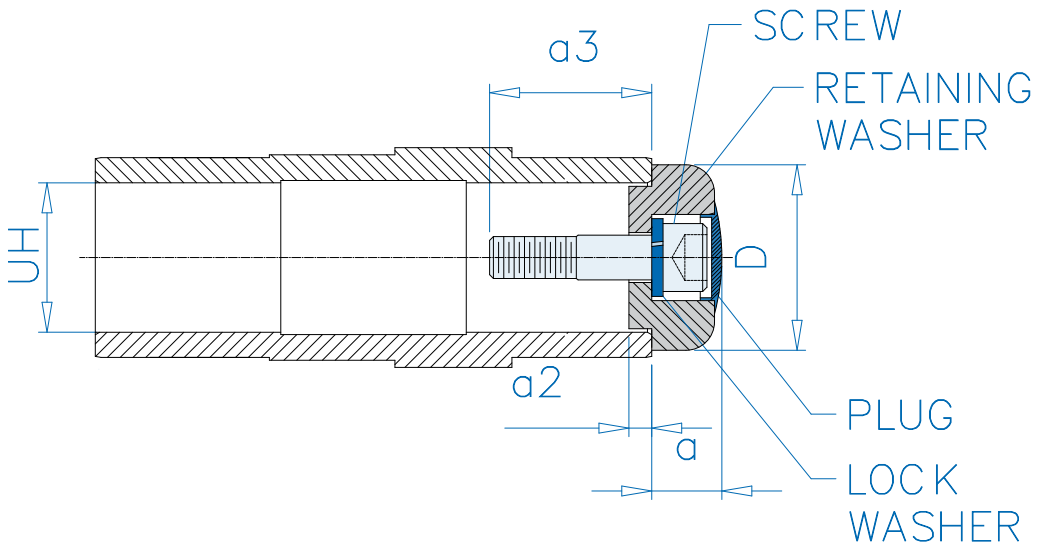

Inch Shaft Hollow Bore (in)

UH	D	a	a2	Screw ❶	a3 ❶	Screw ❷	a3 ❷	Screw ❸	a3 ❸
0.5000	0.984	0.595	0.110	10 - 32 x 5/8	0.499	-	-	-	-
0.7500	1.181	0.557	0.118	1/4 - 20 x 3/4	0.652	1/4 - 20 x 1	0.902	-	-
1.0000	1.496	0.767	0.150	3/8 - 16 x 3/4	0.624	3/8 - 16 x 1-1/4	1.124	-	-
1.1875	1.575	0.769	0.150	7-16 - 14 x 2-1/16	2.016	-	-	-	-
1.2500	1.575	0.769	0.150	7-16 - 14 x 2-1/16	2.016	-	-	-	-
1.3750	1.772	0.946	0.197	5/8 - 11 x 1-1/2	1.461	5/8 - 11 x 2-1/4	2.211	5/8 - 11 x 1	0.961
1.4375	1.772	0.946	0.197	5/8 - 11 x 1-1/2	1.461	5/8 - 11 x 2-1/4	2.211	5/8 - 11 x 1	0.961
1.5000	1.772	0.946	0.197	5/8 - 11 x 1-1/2	1.461	5/8 - 11 x 2-1/4	2.211	5/8 - 11 x 1	0.961
1.6875	2.165	0.927	0.315	5/8 - 11 x 2	2.000	5/8 - 11 x 1-1/2	1.5	-	-
1.9375	2.362	0.966	0.315	5/8 - 11 x 2-1/4	2.250	-	-	-	-
2.0000	2.559	0.971	0.315	5/8 - 11 x 2-1/4	2.250	-	-	-	-
2.1875	2.559	0.971	0.315	5/8 - 11 x 2-1/4	2.250	-	-	-	-
2.3750	2.953	1.129	0.354	3/4 - 10 x 2-1/2	2.500	-	-	-	-
2.4375	2.953	1.129	0.354	3/4 - 10 x 2-1/2	2.500	-	-	-	-
2.7500	3.740	1.132	0.354	3/4 - 10 x 2-1/2	2.500	-	-	-	-
2.9375	3.740	1.132	0.354	3/4 - 10 x 2-1/2	2.500	-	-	-	-
3.2500	4.106	1.132	0.354	3/4 - 10 x 2-1/2	2.500	-	-	-	-
3.4375	4.106	1.132	0.354	3/4 - 10 x 2-1/2	2.500	-	-	-	-
3.6250	4.106	1.132	0.354	3/4 x 10 x 2-1/2	2.500	-	-	-	-
3.9375	4.724	1.299	0.394	7/8 - 9 x 3-1/2	3.500	-	-	-	-
4.0000	4.724	1.299	0.394	7/8 - 9 x 3-1/2	3.500	-	-	-	-
4.4375	5.315	1.299	0.386	7/8 - 9 x 3-1/2	3.500	-	-	-	-
4.7500	5.906	1.299	0.394	7/8 - 9 x 3-1/2	3.500	-	-	-	-

Metric Hollow Bore (mm)

UH	D	a	a2	Screw ❶	a3 ❶	Screw ❷	a3 ❷
25	38	19	3.8	M10 x 45	41.8	M10 x 30	26.8
30	40	19	3.8	M10 x 45	43.8	M10 x 30	28.8
35	45	23.5	3.8	M12 x 55	54	M12 x 35	34
40	55	24	8	M16 x 70	70	M16 x 45	45
50	65	25	8	M16 x 70	70	M16 x 45	45
60	75	29	9	M20 x 90	90	M20 x 55	55
70	95	29	9	M20 x 90	90	M20 x 55	55
80	102	34	9	M20 x 100	100	M20 x 55	55
90	102	34	9	M24 x 110	110	-	-
100	120	34.5	10	M24 x 110	110	M24 x 65	65
110	135	34.5	10	M24 x 110	110	M24 x 65	65

❶, ❷, ❸ - Each fixing element kit may contain up to 3 different kinds of screws

Send Quote Requests to info@automatedpt.com
Call +1(800)985-6929 To Order or Order Online At Nordgearmotors.com

Send Quote Requests to info@automatedpt.com
Call +1(800)985-6929 To Order or Order Online At Nordgearmotors.com

Right-angle Helical-worm Gearmotors

Selection

- Order Form
- Unit Examples
- 0.16 hp
- 0.25 hp
- 0.33 hp
- 0.50 hp
- 0.75 hp
- 1.0 hp
- 1.5 hp
- 2.0 hp
- 3.0 hp
- 5.0 hp
- 7.5 hp
- 10 hp
- 15 hp
- 20 hp

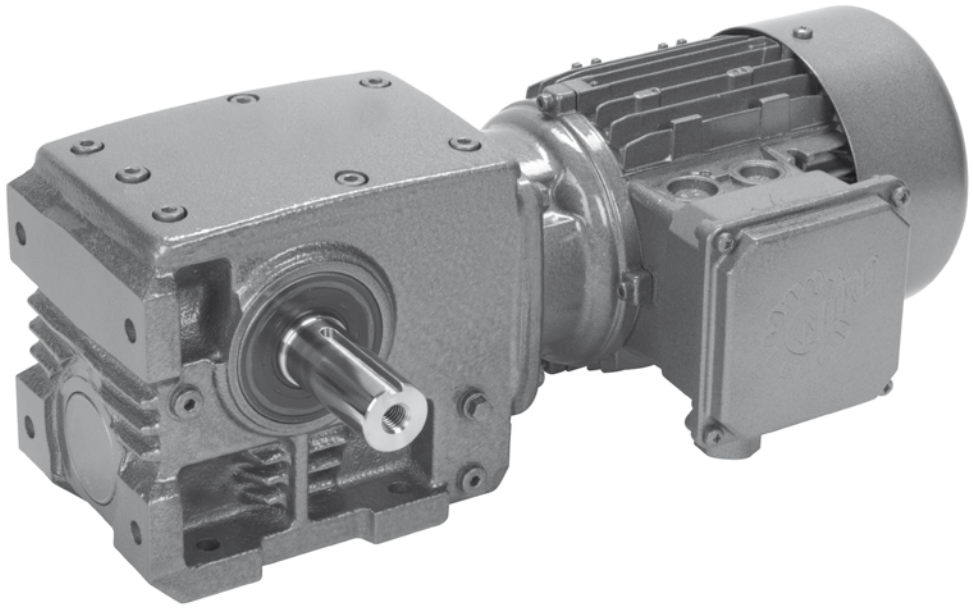

NORD® DRIVESYSTEMS

www.nord.com

UNICASE™

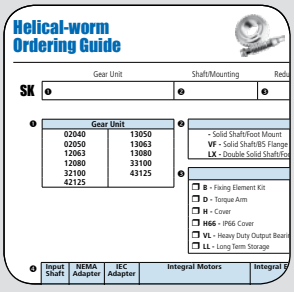

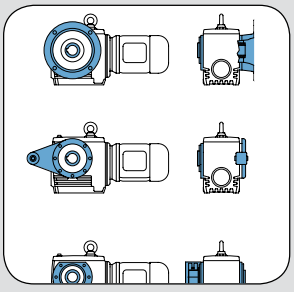

Motor Power P_n [hp]	Output Speed n_2 [rpm]	Output Torque T_a [lb-in]	Service Factor f_B	AGMA Class	Gear Ratio i_{tot}	F_r On [lb]
1.0	18	2786	3.3	III	94.19	30
	13	3320	3.3	III	129.00	33
	10	4069	2.9	III	165.50	36
	9.0	4441	2.7	III	183.50	36
	6.8	5567	2.3	III	241.50	36
	3.2	10580	1.2	I	510.00	32
	2.6	12885	1.0	I	645.00	28
	6.4	7027	1.9	II	257.63	36
	5.5	6669	2.0	III	299.28	36
	4.5	7854	1.7	II	365.07	36
	3.5	9716	1.4	II	468.37	34
	3.2	10574	1.3	I	519.31	32
	2.5	13197	1.1	I	660.60	27
	6.1	7565	3.3	III	269.76	

Send Quote Requests to info@automatedpt.com
Call +1(800)985-6929 To Order or Order Online At Nordgearmotors.com

Helical-worm Ordering Guide

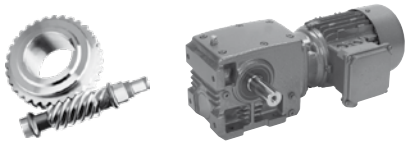

DRIVESYSTEMS

	Gear Unit	Shaft/Mounting	Reducer Options		Motor/Input	Motor Options
SK	❶	❷	❸	-	❹	
					see page 690	see page 690

❶

Gear Unit	
02040	13050
02050	13063
12063	13080
12080	33100
32100	43125
42125	

❷

Shaft/Mounting	
- Solid Shaft/Foot Mount	**AZ** - Hollow Shaft/B14 Flange
VF - Solid Shaft/B5 Flange	**AF** - Hollow Shaft/B5 Flange
LX - Double Solid Shaft/Foot	

❸

Reducer Options		
❒ **B -** Fixing Element Kit	❒ **SH -** Shrink Disc & Cover	❒ **VI -** Flouro-rubber Seals
❒ **D -** Torque Arm	❒ **PR -** Flange Pilot Removal	❒ **OSG -** Oil Sight Glass
❒ **H -** Hollow Shaft Cover	❒ **SM5 -** Stainless Steel Shaft	❒ **OA -** Oil Expansion Chamber
❒ **H66 -** IP66 Hollow Shaft Cover	❒ **SWA -** Special Hollow Shaft	❒ **OC -** Oil Cooler
❒ **VL -** Heavy Duty Output Bearings	❒ **SWV -** Special Solid Shaft	❒ **MDP -** Magnetic Drain Plug
❒ **LL -** Long Term Storage	❒ Cross Drilled Shaft	❒ **ADP -** Additional Drain Plug

❹

Input Shaft	NEMA Adapter	IEC Adapter	Integral Motors		Integral Energy Efficent Motors		Sugar Scoop	Motor Platform	Servo Adapter (Keyed)
W	**N56C**	**IEC 63**	**63S/4** - 0.16hp	**100L/4** - 3hp	**80LH/4** - 1hp	**132SH/4** - 7.5hp	**S56**	**MKN056**	**SEP 100**
	N140TC	**IEC 71**	**63L/4** - 0.25hp	**100LA/4** - 5hp	**90SH/4** - 1.5hp	**132MH/4** - 10hp	**S140T**	**MKN140**	**SEP 130**
	N180TC	**IEC 80**	**71S/4** - 0.33hp	**112M/4** - 5.4hp	**90LH/4** - 2hp	**160MH/4** - 15hp	**S180T**	**MKN180**	**SEP 165**
	N210TC	**IEC 90**	**71L/4** - 0.50hp	**132S/4** - 7.5hp	**100LH/4** - 3hp	**160LH/4** - 20hp	**S210T**	**MKN210**	**SEP 215**
	N250TC	**IEC 100**	**80S/4** - 0.75hp	**132M/4** - 10hp	**112MH/4** - 5hp		**S250T**	**MKN250**	**SEP 300**
		IEC 112	**80L/4** - 1hp	**160M/4** - 15hp					**Servo Adapter (Clamp)**
		IEC 132	**90S/4** - 1.5hp	**160L/4** - 20hp					**SEK 100**
		IEC 160	**90L/4** - 2hp						**SEK 130**
									SEK 165
									SEK 215
									SEK 300

GEARMOTORS

Product Specifications

Ratio

_____ :1

see pages 578 - 596

OR

Output Speed

_____ rpm

see pages 578 - 596

Mounting Position

- ❍ M1
- ❍ M2
- ❍ M3
- ❍ M4
- ❍ M5
- ❍ M6
- ❍ Special _____

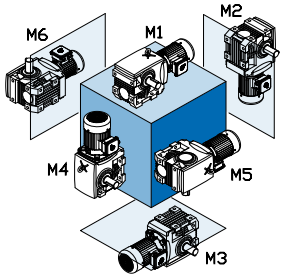

Paint

- ❍ Standard Stainles Steel Paint
- ❍ NSD+ (gray)
- ❍ NSD+W (white)
- ❍ NSD-X3 (gray)
- ❍ NSD-X3W (white)
- ❍ Casting Primed
- ❍ Special _____

Lubricant

- ❍ Standard
- ❍ Synthetic
- ❍ Food Grade
- ❍ Other _____

Solid Shaft Side (if required)

- ❍ Shaft Side A
- ❍ Shaft Side B
- ❍ Shaft Side A&B

see page 18

Hollow Shaft Diameter (if required)

see pages 669 - 671

B5 Flange Side (if required)

- ❍ Flange Side A
- ❍ Flange Side B
- ❍ Flange Side A&B

see page 18

B5 Flange Diameter (if required)

Torque Arm Side & Location (if required)

- ❍ Side A
- ❍ Side B

Location

see pages 18

Shrink Disc Side (if required)

- ❍ Side A
- ❍ Side B

see pages 18

H66 Side (if required)

- ❍ H66 Side A
- ❍ H66 Side B

see pages 18

Gearmotor Only Details

Voltage & Frequency

- ❍ 230/460V-60Hz (460V only ≥ 40 hp)
- ❍ 575V-60Hz
- ❍ 208V-60Hz
- ❍ 400V-50Hz
- ❍ 115/230V-60Hz, 1 ph.
- ❍ Other _____

Terminal Box Pos.

- ❍ TB1
- ❍ TB2
- ❍ TB3
- ❍ TB4

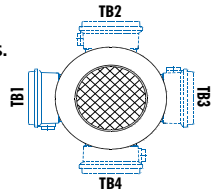

Mtg. Pos. M1 Shown

Conduit Entry Loc.

- ❍ CE I *
- ❍ CE II
- ❍ CE III *
- ❍ CE IV

* Brakemotor

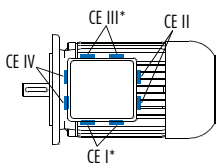

Mtg. Pos. M1 Shown

Send Quote Requests to info@automatedpt.com
Call +1(800)985-6929 To Order or Order Online At Nordgearmotors.com

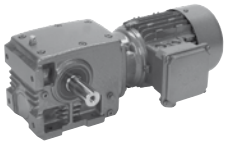



Unit Examples

Examples of Available Helical-worm Units with Solid Shaft Design

SK 12080 - 90 S/4
Helical Worm Unit
Solid Shaft Side A,
Foot Mounted
Two Stages

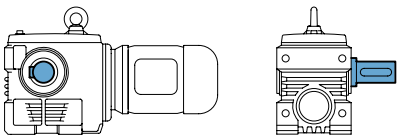

SK 12080VF - 90 L/4
Helical Worm Unit
Solid Shaft Side A,
B5 Flange Side A
Two Stages

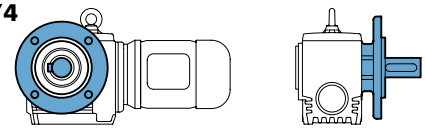

SK 12080LX - 90 S/4
Helical Worm Unit
Double Solid Shaft,
Foot Mounted
Two Stages

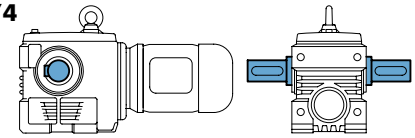

Examples of Available Helical-worm Units with Hollow Shaft Design

SK 12080AZ - 90 S/4
Helical Worm Unit
Hollow Shaft,
B14 Flange Side A & B
Two Stages

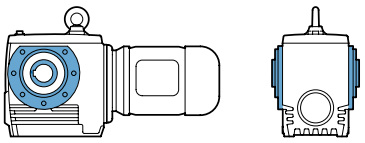

SK 12080AF - 90 S/4
Helical Worm Unit
Hollow Shaft,
B5 Flange & Shaft Side A
Two Stage

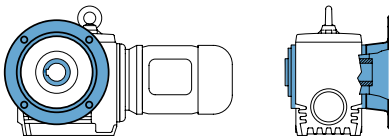

SK 12080AZD - 90 S/4
Helical Worm Unit
Hollow Shaft,
B14 Side A & B,
Torque Arm Side A at 180°
Two Stages

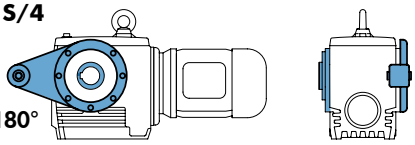

SK 12080AZSH - 90 S/4
Helical Worm Unit
Hollow Shaft,
B14 Flange Side A & B,
Shrink Disc & Cover Side B,
Two Stages

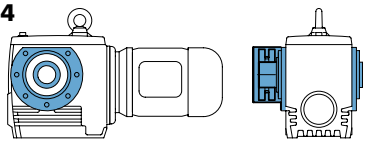

SK 12080AZB - 90 S/4
Helical Worm Unit
Hollow Shaft,
B14 Flange Side A & B,
Fixing Element Kit Side B
Two Stages

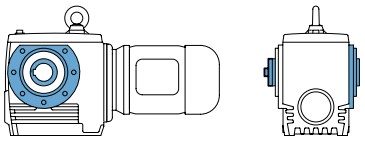

SK 12080AZH - 90 S/4
Helical Worm Unit
Hollow Shaft,
B14 Flange Side A & B,
Hollow Shaft Cover Side B
Two Stages

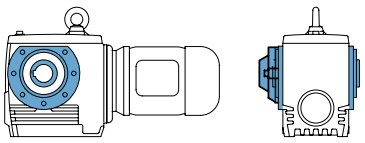

Send Quote Requests to info@automatedpt.com
Call +1(800)985-6929 To Order or Order Online At Nordgearmotors.com

0.16 hp Gearmotors

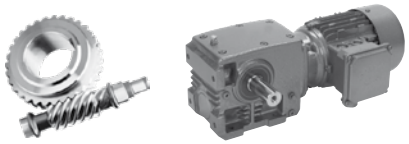

DRIVESYSTEMS

Motor Power P_n [hp]	Output Speed n_2 [rpm]	Output Torque T_2 [lb-in]	Service Factor f_B	AGMA Class	Gear Ratio i_{tot}	Standard Bearings F_{RN} OHL [lb]	Standard Bearings F_{AN} Thrust [lb]	Heavy Duty Bearings (VL) F_{RVL} OHL [lb]	Heavy Duty Bearings (VL) F_{AVL} Thrust [lb]	Model Type	Weight [lb]	Dim. Page
0.16	386	23	17.7	III	4.40	767	698			SK 02040 - 63S/4	27	622
	334	27	15.9	III	5.09	806	740					
	256	34	13.9	III	6.63	864	826					
	226	39	12.9	III	7.51	864	866					
	193	44	13.0	III	8.82	864	900					
	167	51	11.8	III	10.20	864	900					
	128	66	9.8	III	13.27	864	900					
	113	74	9.0	III	15.03	864	900					
	99	84	8.3	III	17.10	864	900					
	87	96	7.4	III	19.56	864	900					
	77	98	6.6	III	21.95	864	900					
	60	126	5.3	III	28.55	862	900					
	53	141	4.9	III	32.34	862	900					
	46	160	4.5	III	36.80	862	900					
	40	181	4.2	III	42.08	860	900					
	38	161	4.5	III	44.85	862	900					
	36	221	4.0	III	46.79	857	900					
	33	183	3.9	III	51.87	860	900					
	28	282	3.1	III	59.83	853	900					
	25	229	3.2	III	67.47	857	900					
	22	255	2.9	III	76.44	855	900					
	20	285	2.7	III	86.97	853	900					
	17	326	2.5	III	99.45	848	900					
	17	414	2.1	III	100.65	837	900					
	15	371	2.2	III	115.05	844	900					
	13	522	1.7	II	128.70	821	900					
	7.1	710	1.2	I	237.90	783	900					
	5.6	907	1.0	I	304.20	727	900					
	15	390	3.8	III	114.75	1285	1800	1361	1800	SK 02050 - 63S/4	43	626
	13	434	3.4	III	130.05	1283	1800	1361	1800			
	11	485	3.2	III	147.90	1280	1800	1361	1800			
	10	700	2.3	III	170.10	1262	1800	1361	1800			
	8.8	788	2.1	III	194.18	1253	1800	1361	1800			
	7.3	939	1.7	II	231.41	1235	1800	1361	1800			
	4.4	1150	1.4	II	385.56	1206	1800	1361	1800			
	3.9	1313	1.2	I	440.13	1177	1800	1361	1800			
	3.2	1534	1.1	I	524.79	1130	1800	1361	1800			
	8.1	849	2.0	III	209.25	1247	1800	1361	1800	SK 13050 - 63S/4	54	630
	5.8	1172	1.5	II	293.19	1202	1800	1361	1800			
	5.1	1333	1.3	I	333.43	1172	1800	1361	1800			
	4.1	1228	1.4	II	411.76	1193	1800	1361	1800			
	3.6	1415	1.2	I	474.31	1157	1800	1361	1800			
	2.9	1714	1.0	I	586.37	1085	1800	1361	1800			
	2.6	1943	0.9	*	664.56	1017	1800	1361	1800			
	2.2	2157	0.8	*	755.77	938	1800	1361	1800			
	2	2157	0.8	*	869.21	938	1800	1361	1800			
	1.7	2157	0.8	*	992.23	938	1800	1361	1800			
	1.3	2157	0.8	*	1332.04	938	1800	1361	1800			
	0.97	2157	0.8	*	1746.09	938	1800	1361	1800			

(AGMA Class I = f_B 1.0 - 1.39 II = f_B 1.4 - 1.99 III = f_B ≥ 2.0 * = f_B < 1.0)

Send Quote Requests to info@automatedpt.com
Call +1(800)985-6929 To Order or Order Online At Nordgearmotors.com

DRIVESYSTEMS

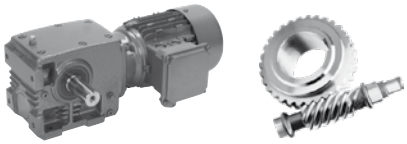

0.16 hp, 0.25 hp Gearmotors

Motor Power P_n [hp]	Output Speed n_2 [rpm]	Output Torque T_2 [lb-in]	Service Factor f_B	AGMA Class	Gear Ratio i_{tot}	Standard Bearings F_{RN} OHL [lb]	Standard Bearings F_{AN} Thrust [lb]	Heavy Duty Bearings (VL) F_{RVL} OHL [lb]	Heavy Duty Bearings (VL) F_{AVL} Thrust [lb]	Model Type	Weight [lb]	Dim. Page
0.16	9.3	613	4.7	III	183.6.0	1789	1721	2468	2250	**SK 12063 - 63S/4**	52	634
	8.7	795	4.0	III	195.86◆	1780	1721	2462	2250			
	7.6	905	3.5	III	223.17◆	1775	1721	2457	2250			
	6.4	1056	2.9	III	264.24◆	1764	1721	2450	2250			
	3.7	1386	2.3	III	464.61◆	1739	1721	2432	2250			
	3.2	1548	2.1	III	529.38◆	1724	1721	2421	2250			
	2.7	1832	1.7	II	626.79◆	1692	1721	2399	2250			
	2.3	2112	1.6	II	737.53	1654	1721	2372	2250	**SK 13063 - 63S/4**	63	638
	1.8	2631	1.3	I	938.20	1566	1721	2313	2250			
	1.5	4204	0.8	*	1140.40◆	1109	1721	2030	2250			
	1.3	4204	0.8	*	1343.63◆	1109	1721	2030	2250			
	5.0	1377	4.5	III	339.48	2318	2025	2925	2700	**SK 13080 - 63S/4**	85	646
	4.2	1636	4.2	III	403.20	2304	2025	2925	2700			
	3.5	1467	4.6	III	482.13	2313	2025	2925	2700			
	3.1	1649	4.1	III	542.07	2302	2025	2925	2700			
	2.7	1881	3.6	III	630.68	2288	2025	2925	2700			
	2.4	2065	3.3	III	706.25	2275	2025	2925	2700			
	2.1	2354	2.9	III	805.28	2252	2025	2925	2700			
	1.8	2739	2.5	III	956.44	2219	2025	2925	2700			
	1.4	3361	2.0	III	1198.81	2149	2025	2925	2700			
	1.4	3435	4.1	III	1175.19	3645	2700	3645	3600	**SK 33100 - 63S/4**	149	654
	1.1	4318	3.3	III	1507.71	3645	2700	3645	3600			
	1.0	4787	2.9	III	1671.69	3645	2700	3645	3600			
0.25	382	36	11.2	III	4.40	763	686			**SK 02040 - 63L/4**	28	622
	330	43	9.9	III	5.09	799	727					
	253	55	8.7	III	6.63	864	806					
	224	62	8.1	III	7.51	864	842					
	190	71	8.1	III	8.82	864	900					
	165	82	7.3	III	10.20	864	900					
	127	105	6.1	III	13.27	864	900					
	112	118	5.6	III	15.03	862	900					
	98	134	5.2	III	17.10	862	900					
	86	153	4.6	III	19.56	862	900					
	77	157	4.1	III	21.95	862	900					
	59	202	3.3	III	28.55	860	900					
	52	226	3.1	III	32.34	857	900					
	46	257	2.8	III	36.80	855	900					
	40	290	2.6	III	42.08	853	900					
	37	257	2.8	III	44.85	855	900					
	36	353	2.5	III	46.79	846	900					
	32	293	2.5	III	51.87	853	900					
	28	452	2.0	III	59.83	833	900					
	25	368	2.0	III	67.47	844	900					
	22	409	1.8	II	76.44	839	900					
	19	457	1.7	II	86.97	833	900					
	17	523	1.6	II	99.45	821	900					
	17	664	1.3	I	100.65	794	900					
	15	594	1.4	II	115.05	808	900					
	13	837	1.1	I	128.70	749	900					
	7.1	1137	0.8	*	237.90	635	900					

◆ **Non-Footed units only**

(AGMA Class I = f_B 1.0 - 1.39 II = f_B 1.4 - 1.99 III = f_B ≥ 2.0 * = f_B < 1.0)

GEARMOTORS

Send Quote Requests to info@automatedpt.com
Call +1(800)985-6929 To Order or Order Online At Nordgearmotors.com

0.25 hp Gearmotors

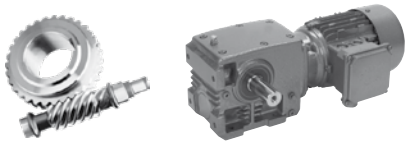

DRIVESYSTEMS

Motor Power P_n [hp]	Output Speed n_2 [rpm]	Output Torque T_2 [lb-in]	Service Factor f_B	AGMA Class	Gear Ratio i_{tot}	Standard Bearings F_{RN} OHL [lb]	Standard Bearings F_{AN} Thrust [lb]	Heavy Duty Bearings (VL) F_{RVL} OHL [lb]	Heavy Duty Bearings (VL) F_{AVL} Thrust [lb]	Model Type	Weight [lb]	Dim. Page
0.25	29	400	3.7	III	57.38	1285	1800	1361	1800	**SK 02050 - 63L/4**	45	626
	26	449	3.3	III	65.25	1283	1800	1361	1800			
	21	454	3.3	III	80.58	1283	1800	1361	1800			
	18	515	2.9	III	92.82	1278	1800	1361	1800			
	15	625	2.4	III	114.75	1269	1800	1361	1800			
	13	696	2.1	III	130.05	1262	1800	1361	1800			
	11	778	2.0	III	147.90	1256	1800	1361	1800			
	9.9	1122	1.5	II	170.10	1211	1800	1361	1800			
	8.7	1262	1.3	I	194.18	1186	1800	1361	1800			
	7.3	1504	1.1	I	231.41	1136	1800	1361	1800			
	4.4	1843	0.9	*	385.56	1046	1800	1361	1800			
	3.8	2103	0.8	*	440.13	959	1800	1361	1800			
	16	597	4.4	III	104.04	1789	1721	2468	2250	**SK 12063 - 63L/4**	53	634
	14	667	3.9	III	118.32	1787	1721	2466	2250			
	12	786	3.4	III	144.33	1782	1721	2462	2250			
	10	884	3.1	III	162.18	1775	1721	2459	2250			
	9.2	983	2.9	III	183.60	1771	1721	2455	2250			
	8.6	1273	2.5	III	195.86◆	1748	1721	2439	2250			
	7.5	1451	2.2	III	223.17◆	1733	1721	2428	2250			
	6.4	1692	1.8	II	264.24◆	1708	1721	2410	2250			
	3.6	2220	1.4	II	464.61◆	1638	1721	2360	2250			
	3.2	2479	1.3	I	529.38◆	1595	1721	2331	2250			
	2.7	2936	1.1	I	626.79◆	1503	1721	2270	2250			
	7.2	1278	4.9	III	234.60	2322	2025	2925	2700	**SK 12080 - 63L/4**	75	642
	6.1	1826	3.4	III	276.92◆	2293	2025	2925	2700			
	2.6	3139	2.0	III	656.88◆	2176	2025	2925	2700			
	5.6	1964	2.7	III	297.73	2284	2025	2925	2700	**SK 13080 - 63L/4**	86	646
	4.9	2207	2.8	III	339.48	2266	2025	2925	2700			
	4.2	2621	2.6	III	403.20	2230	2025	2925	2700			
	3.5	2350	2.9	III	482.13	2255	2025	2925	2700			
	3.1	2643	2.6	III	542.07	2228	2025	2925	2700			
	2.7	3014	2.3	III	630.68	2189	2025	2925	2700			
	2.4	3308	2.1	III	706.25	2156	2025	2925	2700			
	2.1	3772	1.8	II	805.28	2093	2025	2925	2700			
	1.8	4388	1.6	II	956.44	1994	2025	2925	2700			
	1.4	5386	1.3	I	1198.81	1789	2025	2855	2700			
	0.82	9052	0.8	*	2058.82◆		2025	1978	2700			
	2.5	3283	4.3	III	660.60	3645	2700	3645	3600	**SK 33100 - 63L/4**	150	654
	1.4	5504	2.6	III	1175.19	3645	2700	3645	3600			
	1.1	6918	2.0	III	1507.71	3645	2700	3645	3600			
	1.0	7670	1.8	II	1671.69	3645	2700	3645	3600			
	0.76	9884	1.4	II	2200.07	3404	2700	3645	3600			
	0.45	16423	0.9	*	3735.10	1582	2700	3645	3600			

◆ **Non-Footed units only**

(AGMA Class I = f_B 1.0 - 1.39 II = f_B 1.4 - 1.99 III = f_B ≥ 2.0 * = f_B < 1.0)

Send Quote Requests to info@automatedpt.com
Call +1(800)985-6929 To Order or Order Online At Nordgearmotors.com

DRIVESYSTEMS

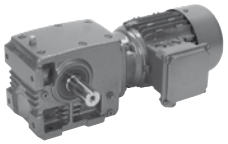



0.33 hp Gearmotors

Motor Power P_n [hp]	Output Speed n_2 [rpm]	Output Torque T_2 [lb-in]	Service Factor f_B	AGMA Class	Gear Ratio i_{tot}	Standard Bearings $F_{R\,N}$ OHL [lb]	Standard Bearings $F_{A\,N}$ Thrust [lb]	Heavy Duty Bearings (VL) $F_{R\,VL}$ OHL [lb]	Heavy Duty Bearings (VL) $F_{A\,VL}$ Thrust [lb]	Model Type	Weight [lb]	Dim. Page
0.33	389	47	8.6	III	4.40	754	666			**SK 02040 - 71S/4**	31	622
	336	55	7.7	III	5.09	790	704					
	258	71	6.7	III	6.63	855	776					
	228	81	6.2	III	7.51	864	812					
	194	92	6.3	III	8.82	864	900					
	168	106	5.7	III	10.20	864	900					
	129	136	4.7	III	13.27	862	900					
	114	152	4.4	III	15.03	862	900					
	100	173	4.0	III	17.10	860	900					
	87	198	3.6	III	19.56	860	900					
	78	203	3.2	III	21.95	860	900					
	60	261	2.5	III	28.55	855	900					
	53	292	2.4	III	32.34	853	900					
	46	332	2.2	III	36.80	848	900					
	41	374	2.0	III	42.08	844	900					
	38	333	2.2	III	44.85	848	900					
	37	457	1.9	II	46.79	833	900					
	33	378	1.9	II	51.87	842	900					
	29	584	1.5	II	59.83	810	900					
	25	475	1.5	II	67.47	830	900					
	22	529	1.4	II	76.44	821	900					
	20	591	1.3	I	86.97	810	900					
	17	676	1.2	I	99.45	792	900					
	17	858	1.0	I	100.65	743	900					
	15	768	1.1	I	115.05	770	900					
	13	1081	0.8	*	128.70	659	900					
	42	379	3.6	III	40.95	1262	1800	1361	1800	**SK 02050 - 71S/4**	47	626
	34	463	3.0	III	50.63	1280	1800	1361	1800			
	30	518	2.9	III	57.38	1278	1800	1361	1800			
	26	581	2.6	III	65.25	1274	1800	1361	1800			
	21	587	2.5	III	80.58	1274	1800	1361	1800			
	18	665	2.2	III	92.82	1267	1800	1361	1800			
	15	808	1.8	II	114.75	1251	1800	1361	1800			
	13	900	1.7	II	130.05	1240	1800	1361	1800			
	12	1005	1.5	II	147.90	1226	1800	1361	1800			
	10	1450	1.1	I	170.10	1148	1800	1361	1800			
	8.8	1632	1.0	I	194.18	1105	1800	1361	1800			
	7.4	1944	0.8	*	231.41	1015	1800	1361	1800			
	41	438	2.2	III	41.74	1220	1742	1361	1800	**SK 13050 - 71S/4**	58	630
	36	499	2.0	III	48.08	1267	1800	1361	1800			
	29	617	1.9	II	59.44	1269	1800	1361	1800			
	25	699	1.6	II	67.37	1262	1800	1361	1800			
	22	795	1.6	II	76.61	1253	1800	1361	1800			
	20	841	1.9	II	86.15	1249	1800	1361	1800			
	17	969	1.7	II	99.23	1233	1800	1361	1800			
	14	1182	1.5	II	122.68	1199	1800	1361	1800			
	12	1340	1.3	I	139.04	1170	1800	1361	1800			
	11	1524	1.1	I	158.12	1132	1800	1361	1800			
	9.4	1526	1.1	I	181.66	1132	1800	1361	1800			
	8.2	1758	1.0	I	209.25	1071	1800	1361	1800			

(AGMA Class I = f_B 1.0 - 1.39 II = f_B 1.4 - 1.99 III = f_B ≥ 2.0 * = f_B < 1.0)

Send Quote Requests to info@automatedpt.com
Call +1(800)985-6929 To Order or Order Online At Nordgearmotors.com

0.33 hp Gearmotors

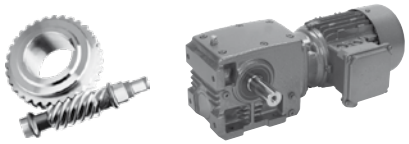

DRIVESYSTEMS

Motor Power P_n [hp]	Output Speed n_2 [rpm]	Output Torque T_2 [lb-in]	Service Factor f_B	AGMA Class	Gear Ratio i_{tot}	Standard Bearings F_{RN} OHL [lb]	Standard Bearings F_{AN} Thrust [lb]	Heavy Duty Bearings (VL) F_{RVL} OHL [lb]	Heavy Duty Bearings (VL) F_{AVL} Thrust [lb]	Model Type	Weight [lb]	Dim. Page
0.33	25	625	4.2	III	68.37	1789	1721	2468	2250	SK 12063 - 71S/4	56	634
	22	698	3.9	III	77.40	1784	1721	2466	2250			
	19	696	3.8	III	92.31	1784	1721	2466	2250			
	16	771	3.4	III	104.04	1782	1721	2464	2250			
	14	863	3.0	III	118.32	1778	1721	2459	2250			
	12	1017	2.6	III	144.33	1769	1721	2453	2250			
	11	1142	2.4	III	162.18	1760	1721	2446	2250			
	9.3	1270	2.3	III	183.60	1748	1721	2439	2250			
	8.7	1646	1.9	II	195.86◆	1712	1721	2414	2250			
	7.7	1875	1.7	II	223.17◆	1685	1721	2394	2250			
	6.5	2188	1.4	II	264.24◆	1643	1721	2365	2250			
	3.7	2870	1.1	I	464.61◆	1519	1721	2279	2250			
	3.2	3205	1.0	I	529.38◆	1440	1721	2228	2250			
	2.7	3795	0.8	*	626.79◆	1267	1721	2120	2250			
	26	677	2.2	III	65.20	1787	1721	2466	2250	SK 13063 - 71S/4	67	638
	21	826	2.1	III	79.54	1780	1721	2462	2250			
	18	935	2.2	III	97.03	1773	1721	2457	2250			
	15	1099	2.1	III	114.04	1762	1721	2448	2250			
	13	1223	2.2	III	128.53	1753	1721	2441	2250			
	12	1391	2.1	III	146.17	1739	1721	2432	2250			
	9.6	1674	1.8	II	178.31	1710	1721	2412	2250			
	8.6	1671	1.9	II	198.86	1710	1721	2412	2250			
	7.6	1883	1.7	II	224.12	1685	1721	2394	2250			
	6.7	2110	1.6	II	254.89	1654	1721	2372	2250			
	5.5	2574	1.3	I	310.92	1577	1721	2320	2250			
	4.9	2892	1.2	I	349.37	1512	1721	2277	2250			
	4.3	3225	1.0	I	395.51	1433	1721	2225	2250			
	3.6	2914	1.2	I	471.70	1508	1721	2273	2250			
	3.2	3219	1.0	I	531.64	1436	1721	2225	2250			
	2.8	3661	0.9	*	604.62	1310	1721	2147	2250			
	2.3	4374	0.8	*	737.53	1031	1721	1989	2250			
	9.1	1365	4.3	III	187.17	2318	2025	2925	2700	SK 12080 - 71S/4	78	642
	7.3	1652	3.8	III	234.60	2302	2025	2925	2700			
	6.2	2361	2.7	III	276.92◆	2252	2025	2925	2700			
	2.6	4058	1.5	II	656.88◆	2050	2025	2925	2700			
	5.7	2538	2.1	III	297.73	2237	2025	2925	2700	SK 13080 - 71S/4	89	646
	5.0	2852	2.2	III	339.48	2207	2025	2925	2700			
	4.2	3388	2.0	III	403.20	2144	2025	2925	2700			
	3.5	3038	2.2	III	482.13	2187	2025	2925	2700			
	3.2	3416	2.0	III	542.07	2142	2025	2925	2700			
	2.7	3896	1.7	II	630.68	2075	2025	2925	2700			
	2.4	4276	1.6	II	706.25	2014	2025	2925	2700			
	2.1	4876	1.4	II	805.28	1901	2025	2925	2700			
	1.8	5673	1.2	I	956.44	1717	2025	2810	2700			
	1.4	6962	1.0	I	1198.81	1280	2025	2567	2700			

◆ **Non-Footed units only**

(AGMA Class I = f_B 1.0 - 1.39 II = f_B 1.4 - 1.99 III = f_B ≥ 2.0 * = f_B < 1.0)

Send Quote Requests to info@automatedpt.com
Call +1(800)985-6929 To Order or Order Online At Nordgearmotors.com

DRIVESYSTEMS

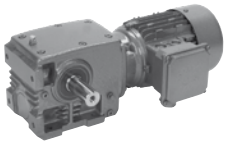



0.33 hp, 0.5 hp Gearmotors

Motor Power P_n [hp]	Output Speed n_2 [rpm]	Output Torque T_2 [lb-in]	Service Factor f_B	AGMA Class	Gear Ratio i_{tot}	Standard Bearings $F_{R\,N}$ OHL [lb]	Standard Bearings $F_{A\,N}$ Thrust [lb]	Heavy Duty Bearings (VL) $F_{R\,VL}$ OHL [lb]	Heavy Duty Bearings (VL) $F_{A\,VL}$ Thrust [lb]	Model Type	Weight [lb]	Dim. Page
0.33	4.7	2526	5.3	III	365.07	3645	2700	3645	3600	**SK 33100 - 71S/4**	153	654
	3.7	3125	4.5	III	468.37	3645	2700	3645	3600			
	3.3	3401	4.1	III	519.31	3645	2700	3645	3600			
	2.6	4245	3.3	III	660.60	3645	2700	3645	3600			
	1.5	7115	2.0	III	1175.19	3645	2700	3645	3600			
	1.1	8942	1.6	II	1507.71	3539	2700	3645	3600			
	1.0	9915	1.4	II	1671.69	3400	2700	3645	3600			
	1.4	7701	3.6	III	1198.5	5963	4669	5963	6300	**SK 43125 - 71S/4**	261	662
	1.2	9305	2.9	III	1476.55	5963	4669	5963	6300			
	1.0	10129	2.7	III	1639.55	5963	4669	5963	6300			
0.5	391	71	5.7	III	4.40	738	637			**SK 02040 - 71L/4**	33	622
	338	81	5.2	III	5.09	772	671					
	259	105	4.6	III	6.63	833	734					
	229	119	4.2	III	7.51	862	765					
	195	135	4.3	III	8.82	862	875					
	169	156	3.9	III	10.20	862	900					
	130	200	3.2	III	13.27	860	900					
	114	224	3.0	III	15.03	857	900					
	101	255	2.7	III	17.10	855	900					
	88	292	2.4	III	19.56	853	900					
	78	299	2.2	III	21.95	851	900					
	60	384	1.7	II	28.55	842	900					
	53	429	1.6	II	32.34	837	900					
	47	488	1.5	II	36.80	828	900					
	41	551	1.4	II	42.08	817	900					
	38	489	1.5	II	44.85	828	900					
	37	672	1.3	I	46.79	792	900					
	33	556	1.3	I	51.87	817	900					
	29	859	1.0	I	59.83	743	900					
	25	699	1.0	I	67.47	785	900					
	23	778	1.0	I	76.44	765	900					
	20	870	0.9	*	86.97	738	900					
	17	994	0.8	*	99.45	695	900					
	72	362	3.8	III	24.01	1044	1505	1361	1800	**SK 02050 - 71L/4**	49	626
	63	406	3.4	III	27.21	1085	1573	1361	1800			
	56	461	3.0	III	30.94	1123	1649	1361	1800			
	48	491	2.8	III	35.55	1181	1800	1361	1800			
	42	558	2.5	III	40.95	1226	1800	1361	1800			
	34	681	2.0	III	50.63	1265	1800	1361	1800			
	30	762	2.0	III	57.38	1256	1800	1361	1800			
	26	854	1.7	II	65.25	1247	1800	1361	1800			
	21	864	1.7	II	80.58	1244	1800	1361	1800			
	19	979	1.5	II	92.82	1231	1800	1361	1800			
	15	1189	1.3	I	114.75	1199	1800	1361	1800			
	13	1324	1.1	I	130.05	1175	1800	1361	1800			
	12	1479	1.0	I	147.90	1141	1800	1361	1800			
	10	2134	0.8	*	170.10	947	1800	1361	1800			

(AGMA Class I = f_B 1.0 - 1.39 II = f_B 1.4 - 1.99 III = f_B ≥ 2.0 * = f_B < 1.0)

Send Quote Requests to info@automatedpt.com
Call +1(800)985-6929 To Order or Order Online At Nordgearmotors.com

0.5 hp Gearmotors

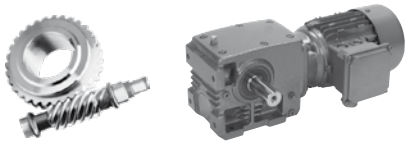

DRIVESYSTEMS

Motor Power P_n [hp]	Output Speed n_2 [rpm]	Output Torque T_2 [lb-in]	Service Factor f_B	AGMA Class	Gear Ratio i_{tot}	Standard Bearings F_{RN} OHL [lb]	Standard Bearings F_{AN} Thrust [lb]	Heavy Duty Bearings (VL) F_{RVL} OHL [lb]	Heavy Duty Bearings (VL) F_{AVL} Thrust [lb]	Model Type	Weight [lb]	Dim. Page
0.5	39	606	3.7	III	43.86	1694	1721	2468	2250	SK 12063 - 71L/4	58	634
	34	689	3.4	III	49.88	1760	1721	2466	2250			
	28	819	3.0	III	60.85	1780	1721	2462	2250			
	25	920	2.8	III	68.37	1773	1721	2457	2250			
	22	1027	2.6	III	77.40	1766	1721	2453	2250			
	19	1024	2.6	III	92.31	1766	1721	2453	2250			
	17	1135	2.3	III	104.04	1760	1721	2448	2250			
	15	1269	2.1	III	118.32	1748	1721	2439	2250			
	12	1496	1.8	II	144.33	1728	1721	2426	2250			
	11	1681	1.6	II	162.18	1710	1721	2412	2250			
	9.4	1869	1.5	II	183.60	1688	1721	2394	2250			
	8.8	2421	1.3	I	195.86◆	1604	1721	2338	2250			
	7.7	2759	1.2	I	223.17◆	1541	1721	2295	2250			
	4.2	3755	0.8	*	413.10◆	1280	1721	2129	2250			
	3.7	4224	0.8	*	464.61◆	1100	1721	2025	2250			
	14	1414	3.9	III	123.42	2315	2025	2925	2700	SK 12080 - 71L/4	80	642
	12	1533	3.7	III	138.21	2309	2025	2925	2700			
	11	1719	3.4	III	157.59	2300	2025	2925	2700			
	9.2	2008	3.0	III	187.17	2279	2025	2925	2700			
	7.3	2431	2.6	III	234.60	2248	2025	2925	2700			
	6.2	3474	1.8	II	276.92◆	2133	2025	2925	2700			
	3.3	4823	1.3	I	520.20◆	1913	2025	2925	2700			
	2.6	5971	1.1	I	656.88◆	1634	2025	2761	2700			
	2.4	6292	1.1	I	706.25	1532	2025	2702	2700	SK 13080 - 71L/4	91	646
	2.1	7174	0.9	*	805.28	1184	2025	2520	2700			
	1.8	8347	0.8	*	956.44		2025	2212	2700			
	7.1	2634	4.8	III	241.50	3645	2700	3645	3600	SK 32100 - 71L/4	137	650
	2.7	6098	2.1	III	645.00	3645	2700	3645	3600			
	6.7	3326	4.0	III	257.63	3645	2700	3645	3600	SK 33100 - 71L/4	155	654
	5.7	3156	4.2	III	299.28	3645	2700	3645	3600			
	4.7	3717	3.6	III	365.07	3645	2700	3645	3600			
	3.7	4598	3.1	III	468.37	3645	2700	3645	3600			
	3.3	5004	2.8	III	519.31	3645	2700	3645	3600			
	2.6	6245	2.3	III	660.60	3645	2700	3645	3600			
	1.5	10469	1.3	I	1175.19	3312	2700	3645	3600			
	1.1	13158	1.1	I	1507.71	2759	2700	3645	3600			
	1.0	14589	1.0	I	1671.69	2347	2700	3645	3600			
	1.4	11331	2.4	III	1198.50	5963	4669	5963	6300	SK 43125 - 71L/4	263	662
	1.2	13691	2.0	III	1476.55	5963	4669	5963	6300			
	1.0	14904	1.8	II	1639.55	5963	4669	5963	6300			

◆ **Non-Footed units only**

(AGMA Class I = f_B 1.0 - 1.39 II = f_B 1.4 - 1.99 III = f_B ≥ 2.0 * = f_B < 1.0)

Send Quote Requests to info@automatedpt.com
Call +1(800)985-6929 To Order or Order Online At Nordgearmotors.com

DRIVESYSTEMS

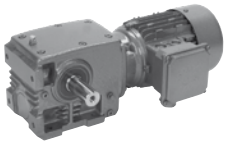



0.75 hp Gearmotors

Motor Power P_n [hp]	Output Speed n_2 [rpm]	Output Torque T_2 [lb-in]	Service Factor f_B	AGMA Class	Gear Ratio i_{tot}	Standard Bearings $F_{R\,N}$ OHL [lb]	Standard Bearings $F_{A\,N}$ Thrust [lb]	Heavy Duty Bearings (VL) $F_{R\,VL}$ OHL [lb]	Heavy Duty Bearings (VL) $F_{A\,VL}$ Thrust [lb]	Model Type	Weight [lb]	Dim. Page
0.75	389	107	3.8	III	4.40	720	594			SK 02040 - 80S/4	37	622
	336	124	3.4	III	5.09	749	619					
	258	160	3.0	III	6.63	806	666					
	228	181	2.8	III	7.51	830	686					
	194	205	2.8	III	8.82	860	824					
	168	237	2.5	III	10.20	857	864					
	129	305	2.1	III	13.27	851	900					
	114	341	1.9	II	15.03	846	900					
	100	388	1.8	II	17.10	842	900					
	87	444	1.6	II	19.56	835	900					
	78	456	1.4	II	21.95	833	900					
	60	585	1.1	I	28.55	810	900					
	53	653	1.1	I	32.34	797	900					
	46	744	1.0	I	36.80	774	900					
	41	839	0.9	*	42.08	749	900					
	38	745	1.0	I	44.85	774	900					
	37	1023	0.9	*	46.79	684	900					
	33	847	0.8	*	51.87	747	900					
	116	342	2.9	III	14.72	884	1204	1361	1800	SK 02050 - 80S/4	53	626
	101	392	2.7	III	16.86	916	1256	1361	1800			
	88	446	2.9	III	19.42	956	1321	1361	1800			
	71	552	2.5	III	24.01	1010	1402	1361	1800			
	63	618	2.2	III	27.21	1042	1460	1361	1800			
	55	702	2.0	III	30.94	1078	1508	1361	1800			
	48	748	1.8	II	35.55	1130	1724	1361	1800			
	42	850	1.6	II	40.95	1172	1800	1361	1800			
	34	1037	1.3	I	50.63	1222	1800	1361	1800			
	30	1159	1.3	I	57.38	1204	1800	1361	1800			
	26	1300	1.1	I	65.25	1179	1800	1361	1800			
	21	1316	1.1	I	80.58	1175	1800	1361	1800			
	18	1490	1.0	I	92.82	1139	1800	1361	1800			
	15	1810	0.8	*	114.75	1058	1800	1361	1800			
	77	519	4.2	III	22.32	1350	1721	2471	2250	SK 12063 - 80S/4	62	634
	68	585	3.7	III	25.15	1395	1721	2468	2250			
	60	657	3.3	III	28.61	1451	1721	2466	2250			
	49	792	2.9	III	34.89	1535	1721	2462	2250			
	44	829	2.6	III	38.92	1593	1721	2462	2250			
	39	923	2.4	III	43.86	1654	1721	2457	2250			
	34	1049	2.2	III	49.88	1708	1721	2453	2250			
	28	1246	2.0	III	60.85	1751	1721	2441	2250			
	25	1400	1.9	II	68.37	1737	1721	2432	2250			
	22	1564	1.7	II	77.40	1721	1721	2421	2250			
	19	1559	1.7	II	92.31	1721	1721	2421	2250			
	16	1728	1.5	II	104.04	1703	1721	2408	2250			
	14	1932	1.4	II	118.32	1679	1721	2390	2250			
	12	2277	1.2	I	144.33	1629	1721	2354	2250			
	11	2559	1.1	I	162.18	1580	1721	2322	2250			
	9.3	2846	1.0	I	183.60	1523	1721	2284	2250			

(AGMA Class I = f_B 1.0 - 1.39 II = f_B 1.4 - 1.99 III = f_B ≥ 2.0 * = f_B < 1.0)

Send Quote Requests to info@automatedpt.com
Call +1(800)985-6929 To Order or Order Online At Nordgearmotors.com

0.75 hp, 1.0 hp Gearmotors

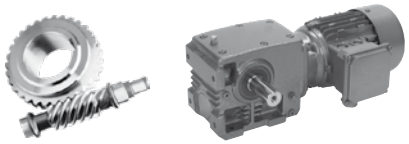

DRIVESYSTEMS

Motor Power P_n [hp]	Output Speed n_2 [rpm]	Output Torque T_2 [lb-in]	Service Factor f_B	AGMA Class	Gear Ratio i_{tot}	Standard Bearings F_{RN} OHL [lb]	Standard Bearings F_{AN} Thrust [lb]	Heavy Duty Bearings (VL) F_{RVL} OHL [lb]	Heavy Duty Bearings (VL) F_{AVL} Thrust [lb]	Model Type	Weight [lb]	Dim. Page
0.75	33	1138	4.5	III	52.03	2158	2025	2925	2700	**SK 12080 - 80S/4**	84	642
	29	1258	4.2	III	58.27	2232	2025	2925	2700			
	26	1416	3.9	III	66.44	2315	2025	2925	2700			
	22	1660	3.5	III	78.91	2302	2025	2925	2700			
	18	1697	2.9	III	94.35	2300	2025	2925	2700			
	16	1879	2.8	III	106.08	2288	2025	2925	2700			
	14	2152	2.5	III	123.42	2270	2025	2925	2700			
	12	2334	2.4	III	138.21	2255	2025	2925	2700			
	11	2617	2.3	III	157.59	2230	2025	2925	2700			
	9.1	3057	1.9	II	187.17	2185	2025	2925	2700			
	7.3	3701	1.7	II	234.60	2104	2025	2925	2700			
	4.2	5799	1.1	I	402.90◆	1681	2025	2790	2700			
	3.3	7343	0.9	*	520.20◆	1096	2025	2482	2700			
	10	2932	4.0	III	165.50	3645	2700	3645	3600	**SK 32100 - 80S/4**	141	654
	9.3	3200	3.8	III	183.50	3645	2700	3645	3600			
	7.1	4011	3.1	III	241.50	3645	2700	3645	3600			
	3.4	7623	1.6	II	510.00	3645	2700	3645	3600			
	2.7	9283	1.4	II	645.00	3494	2700	3645	3600			
	6.6	5063	2.6	III	257.63	3645	2700	3645	3600	**SK 33100 - 80S/4**	159	654
	5.7	4804	2.8	III	299.28	3645	2700	3645	3600			
	4.7	5659	2.4	III	365.07	3645	2700	3645	3600			
	3.7	7000	2.0	III	468.37	3645	2700	3645	3600			
	3.3	7618	1.8	II	519.31	3645	2700	3645	3600			
	2.6	9508	1.5	II	660.60	3461	2700	3645	3600			
	4.5	7475	3.1	III	380.39	5963	4669	5963	6300	**SK 43125 - 80S/4**	267	662
	3.8	8610	3.1	III	444.38	5963	4669	5963	6300			
	3.1	10456	2.6	III	547.47	5963	4669	5963	6300			
	2.8	11610	2.0	III	607.91	5963	4669	5963	6300			
	2.5	13171	1.9	II	689.67	5963	4669	5963	6300			
	2.2	11876	2.3	III	794.58	5963	4669	5963	6300			
	1.8	13617	2.0	III	928.25	5963	4669	5963	6300			
	1.4	17250	1.6	II	1198.50	5963	4669	5963	6300			
	1.2	20843	1.3	I	1476.55	5769	4669	5963	6300			
	1.0	22690	1.2	I	1639.55	5567	4669	5963	6300			
1.0	375	148	2.8	III	4.40	707	554			**SK 02040 - 80L/4**	39	622
	324	172	2.5	III	5.09	731	572			**SK 02040 - 80LH/4**		
	249	222	2.2	III	6.63	781	601					
	220	251	2.0	III	7.51	801	612					
	187	285	2.0	III	8.82	853	781					
	162	329	1.8	II	10.20	848	806					
	124	423	1.5	II	13.27	837	857					
	110	473	1.4	II	15.03	830	882					
	96	539	1.3	I	17.10	819	900					
	84	616	1.1	I	19.56	803	900					
	75	632	1.0	I	21.95	801	900					
	58	812	0.8	*	28.55	756	900					
	51	907	0.8	*	32.34	727	900					

◆ **Non-Footed units only**

(AGMA Class I = f_B 1.0 - 1.39 II = f_B 1.4 - 1.99 III = f_B ≥ 2.0 * = f_B < 1.0) **(Model Type in blue is an Energy Efficient motor)**

Send Quote Requests to info@automatedpt.com
Call +1(800)985-6929 To Order or Order Online At Nordgearmotors.com

DRIVESYSTEMS

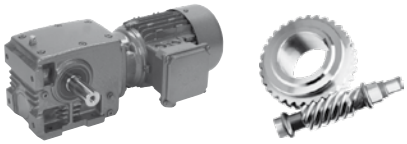

1.0 hp Gearmotors

Motor Power P_n [hp]	Output Speed n_2 [rpm]	Output Torque T_2 [lb-in]	Service Factor f_B	AGMA Class	Gear Ratio i_{tot}	Standard Bearings $F_{R\,N}$ OHL [lb]	Standard Bearings $F_{A\,N}$ Thrust [lb]	Heavy Duty Bearings (VL) $F_{R\,VL}$ OHL [lb]	Heavy Duty Bearings (VL) $F_{A\,VL}$ Thrust [lb]	Model Type	Weight [lb]	Dim. Page
1.0	231	244	3.4	III	7.13	689	810	1361	1800	**SK 02050 - 80L/4**	55	626
	202	276	3.3	III	8.17	713	844	1361	1800	SK 02050 - 80LH/4		
	175	318	3.1	III	9.41	738	869	1361	1800			
	142	393	2.5	III	11.63	779	909	1361	1800			
	125	441	2.4	III	13.18	801	934	1361	1800			
	112	475	2.1	III	14.72	866	1148	1361	1800			
	98	544	2.0	III	16.86	898	1193	1361	1800			
	85	619	2.1	III	19.42	929	1242	1361	1800			
	69	766	1.8	II	24.01	979	1307	1361	1800			
	61	857	1.6	II	27.21	1006	1348	1361	1800			
	53	975	1.4	II	30.94	1037	1379	1361	1800			
	46	1038	1.3	I	35.55	1087	1634	1361	1800			
	40	1180	1.2	I	40.95	1123	1701	1361	1800			
	33	1439	1.0	I	50.63	1150	1791	1361	1800			
	29	1609	0.9	*	57.38	1112	1800	1361	1800			
	25	1805	0.8	*	65.25	1058	1800	1361	1800			
	20	1826	0.8	*	80.58	1053	1800	1361	1800			
	129	436	3.5	III	12.76	1112	1721	2432	2250	**SK 12063 - 80L/4**	64	634
	106	526	3.2	III	15.57	1172	1721	2471	2250	SK 12063 - 80LH/4		
	87	620	3.1	III	18.99	1274	1721	2468	2250			
	74	720	3.0	III	22.32	1334	1721	2464	2250			
	66	812	2.7	III	25.15	1382	1721	2462	2250			
	58	912	2.4	III	28.61	1429	1721	2457	2250			
	47	1099	2.1	III	34.89	1505	1721	2448	2250			
	42	1151	1.9	II	38.92	1564	1721	2446	2250			
	38	1281	1.7	II	43.86	1613	1721	2439	2250			
	33	1456	1.6	II	49.88	1667	1721	2428	2250			
	27	1730	1.4	II	60.85	1703	1721	2408	2250			
	24	1944	1.3	I	68.37	1676	1721	2387	2250			
	21	2171	1.2	I	77.40	1645	1721	2367	2250			
	18	2163	1.2	I	92.31	1647	1721	2367	2250			
	16	2398	1.1	I	104.04	1609	1721	2340	2250			
	14	2682	1.0	I	118.32	1557	1721	2306	2250			
	11	3160	0.8	*	144.33	1451	1721	2234	2250			
	10	3551	0.8	*	162.18	1343	1721	2167	2250			
	52	1042	3.5	III	31.92	1847	2025	2925	2700	**SK 12080 - 80L/4**	86	642
	44	1223	3.3	III	37.91	1935	2025	2925	2700	SK 12080 - 80LH/4		
	37	1374	3.5	III	44.72	2041	2025	2925	2700			
	32	1579	3.2	III	52.03	2129	2025	2925	2700			
	28	1746	3.0	III	58.27	2196	2025	2925	2700			
	25	1965	2.8	III	66.44	2284	2025	2925	2700			
	21	2304	2.5	III	78.91	2257	2025	2925	2700			
	17	2356	2.1	III	94.35	2252	2025	2925	2700			
	16	2608	2.0	III	106.08	2230	2025	2925	2700			
	13	2987	1.8	II	123.42	2192	2025	2925	2700			
	12	3239	1.8	II	138.21	2165	2025	2925	2700			
	10	3632	1.6	II	157.59	2113	2025	2925	2700			
	8.8	4242	1.4	II	187.17	2021	2025	2925	2700			
	7	5137	1.2	I	234.60	1845	2025	2891	2700			
	4.1	8049	0.8	*	402.90 ◆	578	2025	2300	2700			

◆ **Non-Footed units only**

(AGMA Class I = f_B 1.0 - 1.39 II = f_B 1.4 - 1.99 III = f_B ≥ 2.0 * = f_B < 1.0) **(Model Type in blue is an Energy Efficient motor)**

Send Quote Requests to info@automatedpt.com
Call +1(800)985-6929 To Order or Order Online At Nordgearmotors.com

1.0 hp, 1.5 hp Gearmotors

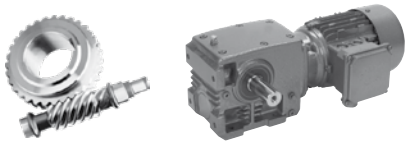

DRIVESYSTEMS

Motor Power P_n [hp]	Output Speed n_2 [rpm]	Output Torque T_2 [lb-in]	Service Factor f_B	AGMA Class	Gear Ratio i_{tot}	Standard Bearings F_{RN} OHL [lb]	Standard Bearings F_{AN} Thrust [lb]	Heavy Duty Bearings (VL) F_{RVL} OHL [lb]	Heavy Duty Bearings (VL) F_{AVL} Thrust [lb]	Model Type	Weight [lb]	Dim. Page
1.0	18	2786	3.3	III	94.19	3074	2700	3645	3600	**SK 32100 - 80L/4**	143	654
	13	3320	3.3	III	129.00	3389	2700	3645	3600	SK 32100 - 80LH/4		
	10	4069	2.9	III	165.50	3638	2700	3645	3600			
	9.0	4441	2.7	III	183.50	3645	2700	3645	3600			
	6.8	5567	2.3	III	241.50	3645	2700	3645	3600			
	3.2	10580	1.2	I	510.00	3292	2700	3645	3600			
	2.6	12885	1.0	I	645.00	2826	2700	3645	3600			
	6.4	7027	1.9	II	257.63	3645	2700	3645	3600	**SK 33100 - 80L/4**	161	654
	5.5	6669	2.0	III	299.28	3645	2700	3645	3600	SK 33100 - 80LH/4		
	4.5	7854	1.7	II	365.07	3645	2700	3645	3600			
	3.5	9716	1.4	II	468.37	3431	2700	3645	3600			
	3.2	10574	1.3	I	519.31	3294	2700	3645	3600			
	2.5	13197	1.1	I	660.60	2747	2700	3645	3600			
	6.1	7565	3.3	III	269.76	5963	4669	5963	6300	**SK 43125 - 80L/4**	269	662
	5.1	8948	2.4	III	323.51	5963	4669	5963	6300	SK 43125 - 80LH/4		
	4.3	10376	2.2	III	380.39	5963	4669	5963	6300			
	3.7	11950	2.2	III	444.38	5963	4669	5963	6300			
	3.0	14512	1.9	II	547.47	5963	4669	5963	6300			
	2.7	16114	1.5	II	607.91	5963	4669	5963	6300			
	2.4	18282	1.4	II	689.67	5963	4669	5963	6300			
	2.1	16484	1.7	II	794.58	5963	4669	5963	6300			
	1.8	18900	1.4	II	928.25	5958	4669	5963	6300			
	1.4	23942	1.1	I	1198.5	5416	4669	5963	6300			
	1.1	28930	0.9	*	1476.55	4671	4669	5963	6300			
	1.0	31493	0.9	*	1639.55	4172	4669	5963	6300			
	0.89	35729	0.8	*	1860.07	3049	4669	5963	6300			
1.5	377	221	1.8	II	4.40	666	464			**SK 02040 - 90S/4**	46	622
	326	255	1.7	II	5.09	684	468			SK 02040 - 90SH/4		
	250	329	1.5	II	6.63	716	464					
	221	373	1.4	II	7.51	727	459					
	188	422	1.4	II	8.82	803	671					
	163	489	1.2	I	10.20	821	684					
	125	628	1.0	I	13.27	801	698					
	110	703	0.9	*	15.03	785	698					
	233	362	2.6	III	7.13	653	702	1361	1703	**SK 02050 - 90S/4**	62	626
	203	410	2.4	III	8.17	673	718	1361	1746	SK 02050 - 90SH/4		
	176	472	2.1	III	9.41	693	725	1361	1784			
	143	584	1.7	II	11.63	720	731	1361	1800			
	126	654	1.6	II	13.18	736	731	1361	1800			
	113	705	1.4	II	14.72	817	1019	1361	1800			
	98	808	1.3	I	16.86	842	1044	1361	1800			
	85	919	1.4	II	19.42	864	1076	1361	1800			
	69	1136	1.2	I	24.01	896	1100	1361	1800			
	61	1272	1.1	I	27.21	914	1109	1361	1800			
	54	1447	0.9	*	30.94	927	1109	1361	1800			
	47	1541	0.9	*	35.55	983	1415	1361	1800			
	41	1751	0.8	*	40.95	1001	1460	1361	1800			

(AGMA Class I = f_B 1.0 - 1.39 II = f_B 1.4 - 1.99 III = f_B ≥ 2.0 * = f_B < 1.0) **(Model Type in blue is an Energy Efficient motor)**

Send Quote Requests to info@automatedpt.com
Call +1(800)985-6929 To Order or Order Online At Nordgearmotors.com

DRIVESYSTEMS

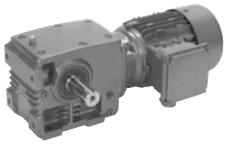



1.5 hp Gearmotors

Motor Power P_n [hp]	Output Speed n_2 [rpm]	Output Torque T_2 [lb-in]	Service Factor f_B	AGMA Class	Gear Ratio i_{tot}	Standard Bearings F_{RN} OHL [lb]	Standard Bearings F_{AN} Thrust [lb]	Heavy Duty Bearings (VL) F_{RVL} OHL [lb]	Heavy Duty Bearings (VL) F_{AVL} Thrust [lb]	Model Type	Weight [lb]	Dim. Page
1.5	223	381	3.6	III	7.43	920	1348	2061	2250	**SK 12063 - 90S/4**	71	634
	196	435	3.4	III	8.47	956	1406	2138	2250	SK 12063 - 90SH/4		
	167	505	3.0	III	9.96	999	1476	2234	2250			
	148	569	2.7	III	11.22	1028	1526	2304	2250			
	130	648	2.5	III	12.76	1064	1577	2385	2250			
	107	781	2.2	III	15.57	1116	1658	2464	2250			
	87	920	2.1	III	18.99	1222	1721	2457	2250			
	74	1069	2.0	III	22.32	1276	1721	2450	2250			
	66	1205	1.8	II	25.15	1312	1721	2444	2250			
	58	1354	1.6	II	28.61	1352	1721	2435	2250			
	48	1631	1.4	II	34.89	1415	1721	2414	2250			
	43	1709	1.3	I	38.92	1472	1721	2410	2250			
	38	1901	1.2	I	43.86	1512	1721	2392	2250			
	33	2162	1.1	I	49.88	1548	1721	2367	2250			
	27	2568	1.0	I	60.85	1580	1721	2320	2250			
	24	2885	0.9	*	68.37	1514	1721	2277	2250			
	21	3222	0.8	*	77.40	1436	1721	2225	2250			
	18	3211	0.8	*	92.31	1438	1721	2228	2250			
	118	719	3.8	III	14.01	1382	1973	2925	2700	**SK 12080 - 90S/4**	93	642
	104	811	3.6	III	15.98	1427	2025	2925	2700	SK 12080 - 90SH/4		
	87	948	4.2	III	19.11	1541	2025	2925	2700			
	77	1066	3.9	III	21.49	1591	2025	2925	2700			
	66	1226	3.5	III	25.00	1663	2025	2925	2700			
	59	1357	3.3	III	27.99	1712	2025	2925	2700			
	52	1547	3.0	III	31.92	1775	2025	2925	2700			
	44	1816	2.7	III	37.91	1852	2025	2925	2700			
	37	2040	2.4	III	44.72	1949	2025	2925	2700			
	32	2344	2.2	III	52.03	2025	2025	2925	2700			
	28	2592	2.0	III	58.27	2079	2025	2925	2700			
	25	2917	1.9	II	66.44	2144	2025	2925	2700			
	21	3420	1.7	II	78.91	2142	2025	2925	2700			
	18	3497	1.4	II	94.35	2131	2025	2925	2700			
	16	3871	1.3	I	106.08	2079	2025	2925	2700			
	13	4434	1.2	I	123.42	1987	2025	2925	2700			
	12	4808	1.2	I	138.21	1915	2025	2925	2700			
	11	5392	1.1	I	157.59	1787	2025	2855	2700			
	8.9	6297	0.9	*	187.17	1532	2025	2702	2700			
	7.1	7625	0.8	*	234.6	929	2025	2412	2700			
	33	2352	4.2	III	50.31	2473	2700	3645	3600	**SK 32100 - 90S/4**	150	654
	26	2945	3.6	III	64.55	2644	2700	3645	3600	SK 32100 - 90SH/4		
	23	3224	3.3	III	71.57	2718	2700	3645	3600			
	18	4136	2.8	III	94.19	2912	2700	3645	3600			
	16	4092	2.5	III	104.0	3038	2700	3645	3600			
	13	4929	2.2	III	129.0	3215	2700	3645	3600			
	10	6040	1.9	II	165.5	3416	2700	3645	3600			
	9.0	6592	1.8	II	183.5	3492	2700	3645	3600			
	6.9	8263	1.5	II	241.5	3627	2700	3645	3600			
	5.5	10401	1.2	I	304.0	3323	2700	3645	3600			
	4.0	12859	0.9	*	410.0	2833	2700	3645	3600			
	3.3	15704	0.8	*	510.0	1928	2700	3645	3600			

(AGMA Class I = f_B 1.0 - 1.39 II = f_B 1.4 - 1.99 III = f_B ≥ 2.0 * = f_B < 1.0) **(Model Type in blue is an Energy Efficient motor)**

Send Quote Requests to info@automatedpt.com
Call +1(800)985-6929 To Order or Order Online At Nordgearmotors.com

1.5 hp, 2.0 hp Gearmotors

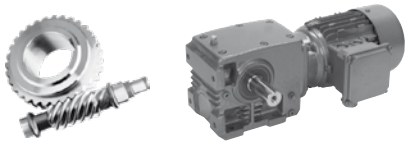

DRIVESYSTEMS

Motor Power P_n [hp]	Output Speed n_2 [rpm]	Output Torque T_2 [lb-in]	Service Factor f_B	AGMA Class	Gear Ratio i_{tot}	Standard Bearings F_{RN} OHL [lb]	Standard Bearings F_{AN} Thrust [lb]	Heavy Duty Bearings (VL) F_{RVL} OHL [lb]	Heavy Duty Bearings (VL) F_{AVL} Thrust [lb]	Model Type	Weight [lb]	Dim. Page
1.5	14	4824	4.1	III	117.50	5605	4669	5963	6300	**SK 42125 - 90S/4**	238	658
	11	5778	3.7	III	144.76	5958	4669	5963	6300	SK 42125 - 90SH/4		
	10	6325	3.5	III	160.74	5963	4669	5963	6300			
	9.1	7071	3.2	III	182.36	5963	4669	5963	6300			
	8.2	7703	3.0	III	201.63	5963	4669	5963	6300			
	3.3	16117	1.6	II	495.85	5963	4669	5963	6300			
	2.4	21816	1.2	I	695.60	5666	4669	5963	6300			
	7.0	9983	2.5	III	236.58	5963	4669	5963	6300	**SK 43125 - 90S/4**	276	662
	6.2	11229	2.2	III	269.76	5963	4669	5963	6300	SK 43125 - 90SH/4		
	5.1	13282	1.6	II	323.51	5963	4669	5963	6300			
	4.4	15401	1.5	II	380.39	5963	4669	5963	6300			
	3.7	17738	1.5	II	444.38	5963	4669	5963	6300			
	3.0	21541	1.3	I	547.47	5697	4669	5963	6300			
	2.7	23919	1.0	I	607.91	5418	4669	5963	6300			
	2.4	27136	0.9	*	689.67	4968	4669	5963	6300			
	2.1	24467	1.1	I	794.58	5348	4669	5963	6300			
	1.8	28054	1.0	I	928.25	4822	4669	5963	6300			
	1.4	35538	0.8	*	1198.5	3112	4669	5963	6300			
2.0	233	482	1.9	II	7.13	617	596	1361	1602	**SK 02050 - 90L/4**	66	626
	203	545	1.8	II	8.17	632	592	1361	1629	SK 02050 - 90LH/4		
	176	628	1.5	II	9.41	646	585	1361	1649			
	143	776	1.3	I	11.63	641	556	1361	1665			
	126	870	1.2	I	13.18	612	529	1361	1670			
	113	938	1.1	I	14.72	767	896	1361	1800			
	98	1074	1.0	I	16.86	781	900	1361	1800			
	85	1223	1.0	I	19.42	799	909	1361	1800			
	69	1512	0.9	*	24.01	812	889	1361	1800			
	61	1693	0.8	*	27.21	821	869	1361	1800			
	223	507	2.7	III	7.43	896	1269	2039	2194	**SK 12063 - 90L/4**	75	634
	196	578	2.5	III	8.47	925	1307	2106	2250	SK 12063 - 90LH/4		
	167	672	2.2	III	9.96	961	1364	2198	2250			
	148	758	2.0	III	11.22	990	1393	2266	2250			
	130	862	1.8	II	12.76	1017	1433	2340	2250			
	107	1039	1.6	II	15.57	1058	1476	2453	2250			
	87	1225	1.6	II	18.99	1175	1721	2441	2250			
	74	1422	1.5	II	22.32	1217	1721	2430	2250			
	66	1603	1.4	II	25.15	1244	1721	2417	2250			
	58	1801	1.2	I	28.61	1278	1721	2401	2250			
	48	2170	1.1	I	34.89	1323	1721	2367	2250			
	43	2273	1.0	I	38.92	1382	1721	2356	2250			
	38	2529	0.9	*	43.86	1409	1721	2324	2250			
	33	2876	0.8	*	49.88	1431	1721	2279	2250			

(AGMA Class I = f_B 1.0 - 1.39 II = f_B 1.4 - 1.99 III = f_B ≥ 2.0 * = f_B < 1.0) **(Model Type in blue is an Energy Efficient motor)**

Send Quote Requests to info@automatedpt.com
Call +1(800)985-6929 To Order or Order Online At Nordgearmotors.com

DRIVESYSTEMS

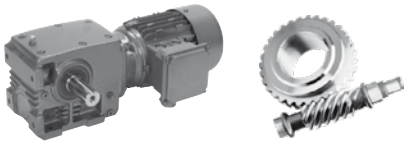

2.0 hp Gearmotors

Motor Power P_n [hp]	Output Speed n_2 [rpm]	Output Torque T_2 [lb-in]	Service Factor f_B	AGMA Class	Gear Ratio i_{tot}	Standard Bearings F_{RN} OHL [lb]	Standard Bearings F_{AN} Thrust [lb]	Heavy Duty Bearings (VL) F_{RVL} OHL [lb]	Heavy Duty Bearings (VL) F_{AVL} Thrust [lb]	Model Type	Weight [lb]	Dim. Page
2.0	220	521	3.4	III	7.55	1132	1539	2588	2633	**SK 12080 - 90L/4**	97	642
	174	660	3.2	III	9.56	1211	1654	2752	2700	SK 12080 - 90LH/4		
	154	742	3.1	III	10.75	1249	1706	2842	2700			
	133	854	3.0	III	12.51	1298	1782	2925	2700			
	118	957	2.8	III	14.01	1337	1836	2925	2700			
	104	1079	2.7	III	15.98	1379	1904	2925	2700			
	87	1261	3.2	III	19.11	1501	2025	2925	2700			
	77	1418	2.9	III	21.49	1544	2025	2925	2700			
	66	1631	2.7	III	25.00	1604	2025	2925	2700			
	59	1805	2.5	III	27.99	1647	2025	2925	2700			
	52	2058	2.3	III	31.92	1697	2025	2925	2700			
	44	2416	2.0	III	37.91	1764	2025	2925	2700			
	37	2714	1.8	II	44.72	1859	2025	2925	2700			
	32	3118	1.6	II	52.03	1919	2025	2925	2700			
	28	3448	1.5	II	58.27	1962	2025	2925	2700			
	25	3881	1.4	II	66.44	2014	2025	2925	2700			
	21	4550	1.3	I	78.91	1967	2025	2925	2700			
	18	4652	1.1	I	94.35	1946	2025	2925	2700			
	16	5150	1.0	I	106.08	1843	2025	2889	2700			
	13	5899	0.9	*	123.42	1654	2025	2772	2700			
	12	6396	0.9	*	138.21	1499	2025	2684	2700			
	11	7173	0.8	*	157.59	1184	2025	2520	2700			
	55	1987	3.3	III	30.11	2081	2700	3645	3600	**SK 32100 - 90L/4**	154	654
	48	2187	3.6	III	34.32	2167	2700	3645	3600	SK 32100 - 90LH/4		
	43	2520	3.0	III	38.63	2221	2700	3645	3600			
	39	2794	2.9	III	42.83	2277	2700	3645	3600			
	33	3130	3.1	III	50.31	2385	2700	3645	3600			
	26	3918	2.7	III	64.55	2536	2700	3645	3600			
	23	4289	2.5	III	71.57	2599	2700	3645	3600			
	18	5502	2.1	III	94.19	2759	2700	3645	3600			
	16	5444	1.9	II	104.0	2891	2700	3645	3600			
	13	6557	1.7	II	129.0	3031	2700	3645	3600			
	10	8035	1.5	II	165.5	3204	2700	3645	3600			
	9.0	8770	1.4	II	183.5	3256	2700	3645	3600			
	6.9	10992	1.1	I	241.5	3220	2700	3645	3600			
	5.5	13837	0.9	*	304.0	2576	2700	3645	3600			
	6.4	13876	1.0	I	257.63	2565	2700	3645	3600	**SK 33100 - 90L/4**	172	654
	5.5	13168	1.0	I	299.28	2756	2700	3645	3600	SK 33100 - 90L/4		
	4.5	15509	0.9	*	365.07	2012	2700	3645	3600			
	22	4787	3.3	III	76.95	4815	4669	5963	6300	**SK 42125 - 90L/4**	243	658
	19	5364	3.2	III	87.30	4993	4669	5963	6300	SK 42125 - 90LH/4		
	17	5646	3.3	III	100.58	5243	4669	5963	6300			
	14	6418	3.1	III	117.50	5468	4669	5963	6300			
	11	7687	2.8	III	144.76	5796	4669	5963	6300			
	10	8414	2.6	III	160.74	5963	4669	5963	6300			
	9.1	9407	2.4	III	182.36	5963	4669	5963	6300			
	8.2	10248	2.3	III	201.63	5963	4669	5963	6300			
	3.3	21441	1.2	I	495.85	5706	4669	5963	6300			
	2.4	29023	0.9	*	695.60	4655	4669	5963	6300			

(AGMA Class I = f_B 1.0 - 1.39 II = f_B 1.4 - 1.99 III = f_B ≥ 2.0 * = f_B < 1.0) **(Model Type in blue is an Energy Efficient motor)**

Send Quote Requests to info@automatedpt.com
Call +1(800)985-6929 To Order or Order Online At Nordgearmotors.com

2.0 hp, 3.0 hp Gearmotors

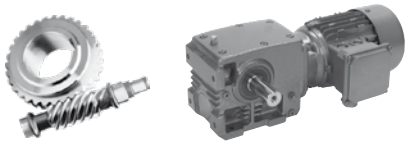

DRIVESYSTEMS

Motor Power P_n [hp]	Output Speed n_2 [rpm]	Output Torque T_2 [lb-in]	Service Factor f_B	AGMA Class	Gear Ratio i_{tot}	Standard Bearings F_{RN} OHL [lb]	Standard Bearings F_{AN} Thrust [lb]	Heavy Duty Bearings (VL) F_{RVL} OHL [lb]	Heavy Duty Bearings (VL) F_{AVL} Thrust [lb]	Model Type	Weight [lb]	Dim. Page
2.0	7.0	13281	1.9	II	236.58	5963	4669	5963	6300	**SK 43125 - 90L/4**	280	662
	6.2	14939	1.7	II	269.76	5963	4669	5963	6300	SK 43125 - 90LH/4		
	5.1	17670	1.2	I	323.51	5963	4669	5963	6300			
	4.4	20489	1.1	I	380.39	5805	4669	5963	6300			
	3.7	23598	1.1	I	444.38	5459	4669	5963	6300			
	3.0	28657	1.0	I	547.47	4718	4669	5963	6300			
	2.1	32550	0.8	*	794.58	3935	4669	5963	6300			
3.0	229	742	1.9	II	7.43	837	1089	1971	2036	**SK 12063 - 100L/4**	84	634
	201	846	1.7	II	8.47	857	1103	2036	2070	SK 12063 - 100LH/4		
	171	984	1.5	II	9.96	884	1123	2115	2111			
	152	1109	1.4	II	11.22	900	1127	2174	2133			
	134	1261	1.3	I	12.76	916	1127	2237	2156			
	110	1521	1.1	I	15.57	938	1112	2331	2169			
	90	1792	1.1	I	18.99	1064	1618	2401	2250			
	76	2082	1.0	I	22.32	1094	1652	2376	2250			
	68	2346	0.9	*	25.15	1105	1670	2347	2250			
	60	2637	0.8	*	28.61	1121	1688	2311	2250			
	226	763	3.3	III	7.55	1078	1382	2518	2486	**SK 12080 - 100L/4**	106	642
	178	966	3.0	III	9.56	1141	1465	2678	2599	SK 12080 - 100LH/4		
	159	1086	2.8	III	10.75	1170	1492	2759	2651			
	136	1250	2.4	III	12.51	1213	1539	2867	2700			
	122	1400	2.3	III	14.01	1240	1555	2925	2700			
	107	1579	1.8	II	15.98	1269	1586	2925	2700			
	89	1846	2.2	III	19.11	1400	2025	2925	2700			
	79	2076	2.0	III	21.49	1433	2025	2925	2700			
	68	2387	1.8	II	25.00	1478	2025	2925	2700			
	61	2642	1.7	II	27.99	1517	2025	2925	2700			
	53	3013	1.5	II	31.92	1541	2025	2925	2700			
	45	3536	1.4	II	37.91	1584	2025	2925	2700			
	38	3972	1.2	I	44.72	1667	2025	2925	2700			
	33	4564	1.1	I	52.03	1699	2025	2925	2700			
	29	5047	1.1	I	58.27	1721	2025	2905	2700			
	26	5681	1.0	I	66.44	1715	2025	2810	2700			
	22	6659	0.9	*	78.91	1404	2025	2630	2700			
	128	1348	3.1	III	13.34	1539	1922	3632	3600	**SK 32100 - 100L/4**	163	654
	105	1621	3.7	III	16.22	1674	2322	3645	3600	SK 32100 - 100LH/4		
	100	1729	2.7	III	17.11	1634	2032	3645	3600			
	90	1896	2.5	III	18.97	1672	2075	3645	3600			
	83	2030	3.6	III	20.54	1787	2502	3645	3600			
	70	2371	3.4	III	24.27	1859	2630	3645	3600			
	57	2909	3.1	III	30.11	1953	2700	3645	3600			
	50	3201	3.0	III	34.32	2030	2700	3645	3600			
	44	3689	2.6	III	38.63	2061	2700	3645	3600			
	40	4090	2.4	III	42.83	2102	2700	3645	3600			
	34	4581	2.1	III	50.31	2201	2700	3645	3600			
	26	5734	1.8	II	64.55	2309	2700	3645	3600			
	24	6278	1.7	II	71.57	2354	2700	3645	3600			
	18	8053	1.4	II	94.19	2435	2700	3645	3600			

(AGMA Class I = f_B 1.0 - 1.39 II = f_B 1.4 - 1.99 III = f_B ≥ 2.0 * = f_B < 1.0) **(Model Type in blue is an Energy Efficient motor)**

Send Quote Requests to info@automatedpt.com
Call +1(800)985-6929 To Order or Order Online At Nordgearmotors.com

DRIVESYSTEMS

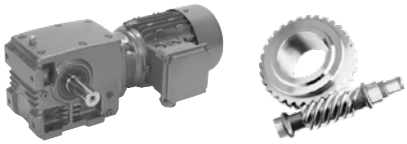

3.0 hp, 5.0 hp Gearmotors

Motor Power P_n [hp]	Output Speed n_2 [rpm]	Output Torque T_2 [lb-in]	Service Factor f_B	AGMA Class	Gear Ratio i_{tot}	Standard Bearings $F_{R\,N}$ OHL [lb]	Standard Bearings $F_{A\,N}$ Thrust [lb]	Heavy Duty Bearings (VL) $F_{R\,VL}$ OHL [lb]	Heavy Duty Bearings (VL) $F_{A\,VL}$ Thrust [lb]	Model Type	Weight [lb]	Dim. Page
3.0	16	7968	1.3	I	104.0	2594	2700	3645	3600	**SK 32100 - 100L/4**	163	654
	13	9597	1.1	I	129.0	2664	2700	3645	3600	SK 32100 - 100LH/4		
	10	11761	1.0	I	165.5	2752	2700	3645	3600			
	9.3	12837	0.9	*	183.5	2765	2700	3645	3600			
	7.1	16089	0.8	*	241.5	1753	2700	3645	3600			
	48	3452	3.3	III	35.33	3690	4669	5963	6300	**SK 42125 - 100L/4**	251	658
	42	3910	4.2	III	40.95	3861	4669	5963	6300	SK 42125 - 100LH/4		
	35	4544	3.8	III	48.15	4046	4669	5963	6300			
	30	5247	3.5	III	56.25	4214	4669	5963	6300			
	25	6387	3.1	III	69.30	4453	4669	5963	6300			
	22	7006	2.9	III	76.95	4579	4669	5963	6300			
	20	7852	2.7	III	87.30	4739	4669	5963	6300			
	17	8264	2.3	III	100.58	4955	4669	5963	6300			
	15	9394	2.1	III	117.50	5157	4669	5963	6300			
	12	11252	1.9	II	144.76	5427	4669	5963	6300			
	11	12315	1.8	II	160.74	5564	4669	5963	6300			
	9.3	13769	1.6	II	182.36	5735	4669	5963	6300			
	8.5	15000	1.6	II	201.63	5848	4669	5963	6300			
	5.1	22857	1.1	I	337.46	5549	4669	5963	6300			
	3.4	31383	0.8	*	495.85	4196	4669	5963	6300			
	9.1	15640	1.5	II	187.80	5623	4669	5963	6300	**SK 43125 - 100L/4**	289	662
	7.2	19439	1.3	I	236.58	5823	4669	5963	6300	SK 43125 - 100LH/4		
	6.3	21866	1.1	I	269.76	5661	4669	5963	6300			
5.0	228	1255	2.0	III	7.55	983	1103	2421	2239	**SK 12080 - 100LA/4**	112	642
	180	1590	1.8	II	9.56	1019	1103	2556	2286	SK 12080 - 112MH/4		
	160	1788	1.7	II	10.75	1033	1091	2624	2297			
	138	2058	1.5	II	12.51	1053	1067	2711	2309			
	123	2304	1.4	II	14.01	1058	1035	2779	2297			
	108	2599	1.1	I	15.98	1053	995	2849	2286			
	90	3038	1.3	I	19.11	1220	1620	2925	2700			
	80	3417	1.2	I	21.49	1226	1620	2925	2700			
	69	3929	1.1	I	25.00	1240	1604	2925	2700			
	62	4348	1.0	I	27.99	1244	1604	2925	2700			
	54	4958	0.9	*	31.92	1233	1541	2916	2700			
	46	5820	0.8	*	37.91	1213	1465	2786	2700			
	240	1222	2.3	III	7.19	1233	1397	2993	3308	**SK 32100 - 100LA/4**	170	654
	190	1530	2.2	III	9.10	1298	1467	3179	3454	SK 32100 - 112MH/4		
	160	1807	2.1	III	10.75	1346	1499	3312	3555			
	129	2219	1.9	II	13.34	1397	1530	3485	3600			
	106	2668	2.3	III	16.22	1548	2041	3645	3600			
	101	2845	1.6	II	17.11	1451	1519	3645	3600			
	91	3120	1.5	II	18.97	1474	1512	3645	3600			
	84	3341	2.2	III	20.54	1622	2147	3645	3600			
	71	3903	2.1	III	24.27	1670	2210	3645	3600			
	57	4787	1.9	II	30.11	1724	2273	3645	3600			
	50	5269	1.8	II	34.32	1791	2648	3645	3600			
	45	6071	1.6	II	38.63	1764	2300	3645	3600			
	40	6732	1.4	II	42.83	1773	2295	3645	3600			

(AGMA Class I = f_B 1.0 - 1.39 II = f_B 1.4 - 1.99 III = f_B ≥ 2.0 * = f_B < 1.0) **(Model Type in blue is an Energy Efficient motor)**

Send Quote Requests to info@automatedpt.com
Call +1(800)985-6929 To Order or Order Online At Nordgearmotors.com

5.0 hp, 7.5 hp Gearmotors

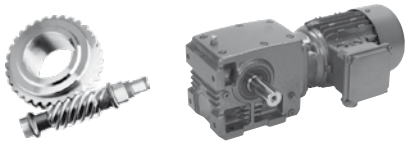

DRIVESYSTEMS

Motor Power P_n [hp]	Output Speed n_2 [rpm]	Output Torque T_2 [lb-in]	Service Factor f_B	AGMA Class	Gear Ratio i_{tot}	Standard Bearings F_{RN} OHL [lb]	Standard Bearings F_{AN} Thrust [lb]	Heavy Duty Bearings (VL) F_{RVL} OHL [lb]	Heavy Duty Bearings (VL) F_{AVL} Thrust [lb]	Model Type	Weight [lb]	Dim. Page
5.0	34	7539	1.3	I	50.31	1845	2700	3645	3600	**SK 32100 - 100LA/4**	170	654
	27	9437	1.1	I	64.55	1856	2700	3645	3600	SK 32100 - 112MH/4		
	24	10333	1.0	I	71.57	1852	2700	3645	3600			
	18	13254	0.9	*	94.19	1789	2700	3645	3600			
	17	13114	0.8	*	104.00	2003	2700	3645	3600			
	183	1599	2.5	III	9.41	2381	2954	5162	5270	**SK 42125 - 100LA/4**	258	658
	156	1880	2.4	III	11.06	2489	3096	5389	5459	SK 42125 - 112MH/4		
	133	2198	2.3	III	12.93	2599	3245	5627	5654			
	108	2677	2.1	III	15.92	2747	3443	5949	5906			
	92	3127	2.5	III	18.80	2945	4034	5963	6300			
	78	3637	2.4	III	22.11	3083	4259	5963	6300			
	67	4248	2.3	III	25.83	3204	4462	5963	6300			
	54	5176	2.1	III	31.82	3380	4669	5963	6300			
	49	5682	2.0	III	35.33	3465	4669	5963	6300			
	42	6436	2.5	III	40.95	3627	4669	5963	6300			
	36	7480	2.3	III	48.15	3769	4669	5963	6300			
	31	8635	2.1	III	56.25	3899	4669	5963	6300			
	25	10512	1.9	II	69.30	4070	4669	5963	6300			
	22	11532	1.8	II	76.95	4156	4669	5963	6300			
	20	12923	1.6	II	87.30	4264	4669	5963	6300			
	17	13602	1.4	II	100.58	4466	4669	5963	6300			
	15	15461	1.3	I	117.50	4604	4669	5963	6300			
	12	18519	1.1	I	144.76	4763	4669	5963	6300			
	11	20269	1.1	I	160.74	4831	4669	5963	6300			
	9.5	22662	1.0	I	182.36	4907	4669	5963	6300			
	8.6	24689	0.9	*	201.63	4957	4669	5963	6300			
	28	9823	1.4	II	62.50	3915	4669	5963	6300	**SK 43125 - 100LA/4**	295	662
	25	10872	1.3	I	69.99	3994	4669	5963	6300	SK 43125 - 112MH/4		
	20	13236	1.2	I	86.22	4129	4669	5963	6300			
	16	16021	1.3	I	110.97	4430	4669	5963	6300			
	13	18601	1.2	I	130.49	4514	4669	5963	6300			
	11	21451	1.1	I	152.44	4581	4669	5963	6300			
	9.2	25741	0.9	*	187.80	4649	4669	5963	6300			
	7.3	31995	0.8	*	236.58	4064	4669	5963	6300			
7.5	241	1822	3.3	III	7.19	1136	1139	2898	3053	**SK 32100 - 132S/4**	221	654
	191	2280	2.8	III	9.10	1179	1139	3056	3148	SK 32100 - 132SH/4		
	161	2693	2.4	III	10.75	1202	1107	3166	3179			
	130	3306	1.9	II	13.34	1226	1049	3305	3209			
	107	3975	1.7	II	16.22	1388	1708	3573	3600			
	101	4240	1.1	I	17.11	1040	900	3449	3179			
	91	4649	1.0	I	18.97	954	821	3510	3148			
	84	4978	1.5	II	20.54	1424	1715	3645	3600			
	71	5816	1.6	II	24.27	1431	1708	3645	3600			
	58	7133	1.3	I	30.11	1431	1643	3645	3600			
	51	7850	1.2	I	34.32	1478	2095	3645	3600			
	45	9047	1.1	I	38.63	1377	1499	3645	3600			
	41	10030	1.0	I	42.83	1343	1395	3645	3600			
	34	11234	0.9	*	50.31	1395	1971	3645	3600			

(AGMA Class I = f_B 1.0 - 1.39 II = f_B 1.4 - 1.99 III = f_B ≥ 2.0 * = f_B < 1.0) **(Model Type in blue is an Energy Efficient motor)**

Send Quote Requests to info@automatedpt.com
Call +1(800)985-6929 To Order or Order Online At Nordgearmotors.com

DRIVESYSTEMS

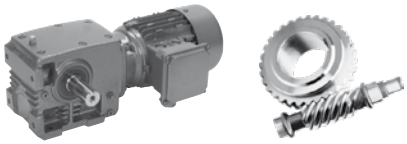

7.5 hp, 10 hp Gearmotors

Motor Power P_n [hp]	Output Speed n_2 [rpm]	Output Torque T_2 [lb-in]	Service Factor f_B	AGMA Class	Gear Ratio i_{tot}	Standard Bearings F_{RN} OHL [lb]	Standard Bearings F_{AN} Thrust [lb]	Heavy Duty Bearings (VL) F_{RVL} OHL [lb]	Heavy Duty Bearings (VL) F_{AVL} Thrust [lb]	Model Type	Weight [lb]	Dim. Page
7.5	238	1866	4.0	III	7.29	2138	2489	4725	4757	**SK 42125 - 132S/4**	309	658
	224	1986	3.9	III	7.76	2171	2538	4811	4817	SK 42125 - 132SH/4		
	206	2158	3.9	III	8.43	2221	2592	4919	4903			
	184	2383	3.7	III	9.41	2286	2671	5063	5006			
	157	2801	3.5	III	11.06	2376	2781	5274	5162			
	134	3274	3.2	III	12.93	2468	2867	5497	5303			
	119	3610	3.3	III	14.57	2635	3443	5785	5886			
	109	3988	2.8	III	15.92	2590	2966	5792	5486			
	92	4659	2.9	III	18.80	2806	3699	5963	6197			
	78	5419	2.6	III	22.11	2914	3850	5963	6300			
	67	6330	2.4	III	25.83	3002	4007	5963	6300			
	55	7712	2.1	III	31.82	3130	4178	5963	6300			
	49	8466	1.3	I	35.33	3195	4259	5963	6300			
	42	9590	1.7	II	40.95	3339	4669	5963	6300			
	36	11145	1.6	II	48.15	3429	4669	5963	6300			
	31	12867	1.4	II	56.25	3519	4669	5963	6300			
	25	15663	1.3	I	69.30	3593	4669	5963	6300			
	23	17182	1.2	I	76.95	3636	4669	5963	6300			
	20	19256	1.1	I	87.30	3663	4669	5963	6300			
	17	20268	0.9	*	100.58	3859	4669	5963	6300			
	15	23037	0.9	*	117.50	3915	4669	5963	6300			
	12	27593	0.8	*	144.76	3931	4669	5963	6300			
10	241	2429	2.5	III	7.19	1042	884	2806	2815	**SK 32100 - 132M/4**	245	654
	191	3042	2.1	III	9.10	983	815	2936	2828	SK 32100 - 132MH/4		
	161	3594	1.8	II	10.75	873	727	3026	2815			
	130	4411	1.4	II	13.34	684	565	3123	2756			
	107	5305	1.3	I	16.22	1229	1368	3409	3591			
	101	5658	0.8	*	17.11	349	281	3215	2592			
	91	6204	0.8	*	18.97	176	140	3245	2500			
	84	6643	1.1	I	20.54	1208	1298	3537	3600			
	71	7761	1.2	I	24.27	1181	1211	3611	3600			
	58	9520	1.0	I	30.11	1109	1017	3645	3539			
	51	10476	0.9	*	34.32	1152	1544	3645	3600			
	45	12073	0.8	*	38.63	837	707	3645	3362			
	238	2490	3.0	III	7.29	2066	2279	4655	4570	**SK 42125 - 132M/4**	333	658
	224	2651	3.0	III	7.76	2097	2315	4730	4613	SK 42125 - 132MH/4		
	206	2880	2.9	III	8.43	2142	2347	4838	4673			
	184	3180	2.7	III	9.41	2192	2392	4970	4757			
	157	3738	2.6	III	11.06	2273	2446	5168	4871			
	134	4370	2.4	III	12.93	2338	2489	5369	4966			
	119	4818	2.5	III	14.57	2522	3182	5693	5654			
	109	5323	2.1	III	15.92	2428	2513	5634	5063			
	92	6217	2.1	III	18.80	2651	3355	5963	5906			
	78	7231	2.0	III	22.11	2734	3458	5963	6068			
	67	8448	1.8	II	25.83	2801	3526	5963	6197			
	55	10291	1.6	II	31.82	2878	3593	5963	6300			
	49	11298	1.0	I	35.33	2916	3629	5963	6300			
	42	12798	1.3	I	40.95	3053	4484	5963	6300			
	36	14873	1.2	I	48.15	3089	4579	5963	6300			
	31	17171	1.1	I	56.25	3123	4631	5963	6300			

(AGMA Class I = f_B 1.0 - 1.39 II = f_B 1.4 - 1.99 III = f_B ≥ 2.0 * = f_B < 1.0) **(Model Type in blue is an Energy Efficient motor)**

Send Quote Requests to info@automatedpt.com
Call +1(800)985-6929 To Order or Order Online At Nordgearmotors.com

10 hp, 15 hp, 20 hp Gearmotors

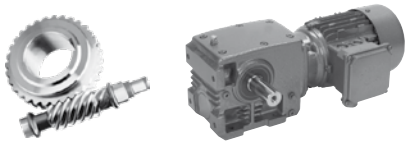

DRIVESYSTEMS

Motor Power P_n [hp]	Output Speed n_2 [rpm]	Output Torque T_2 [lb-in]	Service Factor f_B	AGMA Class	Gear Ratio i_{tot}	Standard Bearings F_{RN} OHL [lb]	Standard Bearings F_{AN} Thrust [lb]	Heavy Duty Bearings (VL) F_{RVL} OHL [lb]	Heavy Duty Bearings (VL) F_{AVL} Thrust [lb]	Model Type	Weight [lb]	Dim. Page
10	25	20902	0.9	*	69.30	3103	4669	5963	6300	**SK 42125 - 132M/4**	333	658
	23	22930	0.9	*	76.95	3085	4669	5963	6300	SK 42125 - 132MH/4		
	20	25697	0.8	*	87.30	3058	4624	5963	6300			
15	243	3660	2.3	III	7.29	1910	1872	4496	4169	**SK 42125 - 160M/4**	373	658
	228	3898	2.3	III	7.76	1931	1872	4561	4190	SK 42125 - 160MH/4		
	210	4234	2.4	III	8.43	1958	1872	4649	4223			
	188	4676	2.2	III	9.41	1994	1856	4766	4257			
	160	5496	2.0	III	11.06	2041	1816	4937	4300			
	137	6425	1.7	II	12.93	2061	1744	5096	4284			
	121	7084	1.7	II	14.57	2291	2675	5454	5186			
	111	7826	1.4	II	15.92	1901	1607	5306	4230			
	94	9141	1.5	II	18.80	2347	2698	5765	5321			
	80	10632	1.3	I	22.11	2383	2698	5960	5373			
	69	12421	1.2	I	25.83	2376	2624	5963	5373			
	56	15132	1.1	I	31.82	2360	2489	5963	5337			
	43	18817	0.9	*	40.95	2466	3443	5963	6300			
	37	21868	0.8	*	48.15	2396	3375	5963	6300			
20	242	4894	1.7	II	7.29	1760	1467	4370	3782	**SK 42125 - 160L/4**	410	658
	227	5208	1.7	II	7.76	1773	1438	4415	3787	SK 42125 - 160LH/4		
	209	5658	1.8	II	8.43	1751	1395	4498	3782			
	188	6248	1.6	II	9.41	1663	1339	4595	3769			
	160	7344	1.5	II	11.06	1492	1197	4725	3728			
	137	8585	1.3	I	12.93	1274	1017	4847	3616			
	121	9466	1.3	I	14.57	2050	2178	5256	4734			
	111	10457	1.0	I	15.92	873	704	4984	3407			
	94	12215	1.1	I	18.80	2034	2054	5504	4725			
	80	14207	1.0	I	22.11	2007	1928	5650	4687			
	68	16598	0.9	*	25.83	1935	1744	5769	4583			
	55	20219	0.8	*	31.82	1708	1409	5909	4367			

(AGMA Class I = f_B 1.0 - 1.39 II = f_B 1.4 - 1.99 III = f_B ≥ 2.0 * = f_B < 1.0) **(Model Type in blue is an Energy Efficient motor)**

Send Quote Requests to info@automatedpt.com
Call +1(800)985-6929 To Order or Order Online At Nordgearmotors.com

Send Quote Requests to info@automatedpt.com
Call +1(800)985-6929 To Order or Order Online At Nordgearmotors.com

Right-angle Helical-worm Reducers
Selection & Combinations

Selection

- SK 02040
- SK 02050
- SK 13050
- SK 12063
- SK 13063
- SK 12080
- SK 13080
- SK 32100
- SK 33100
- SK 42125
- SK 43125

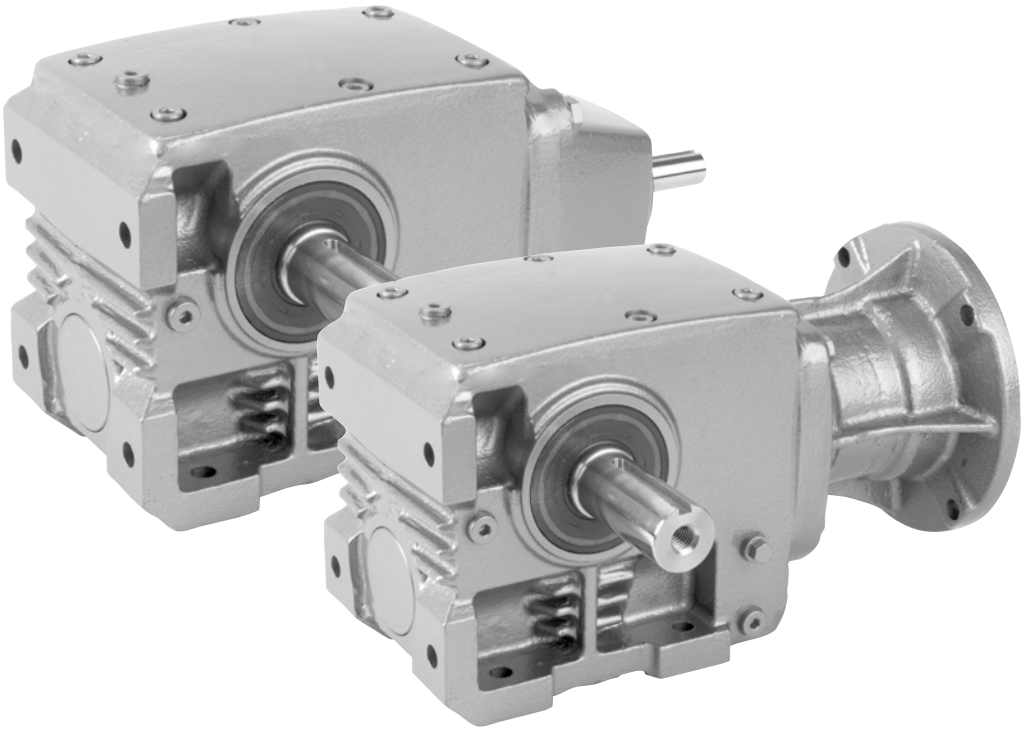

NORD® DRIVESYSTEMS

www.nord.com

UNICASE™

Model Type	Gear Ratio Total i_{tot}	Helical Gears i_1	Worm Gears $z_2 = i_2$	n_1=1750 rpm n_2 [rpm]	$T_{2\,max}$ [lb-in]	HP_{max} [hp]	# [%]
SK 33100	53.70	10.39	31/6	33	6106	2.00	87
	69.85	5.99	35/3	25	9558	2.00	83
	85.21	7.30	35/3	21	9558	2.00	82
	109.32	9.37	35/3	16	10532	2.00	81
	121.21	10.39	35/3	14	10532	2.00	81
	142.38	7.30	39/2	12	11594	2.00	75
	182.66	9.37	39/2	9.6	12567	2.00	73
	257.63	13.21	39/2	6.8	13364	2.00	71
	299.28	5.99	50/1	5.8	13364	2.00	58
	365.07	7.30	50/1	4.8	13364	1.78	57
	468.37	9.37	50/1	3.7	14072	1.53	54
	519.31	10.39	50/1	3.4	14072	1.41	54
	660.60	13.21	50/1	2.6	14072	1.11	52
	1175.19	23.50	50/1	1.5	14072	0.68	49
	1507.71	30.15	50/1	1.2	14072	0.56	





Send Quote Requests to info@automatedpt.com
Call +1(800)985-6929 To Order or Order Online At Nordgearmotors.com

SK 02040
NEMA-C + W
Ratings & Combinations

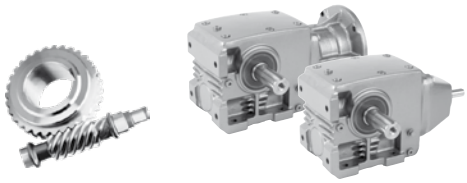

DRIVESYSTEMS

Model Type	Gear Ratio			n_2 = Output Speed $T_{2\,max}$ = Output Torque* HP_{max} = Input power ◈ η = Efficiencies								NEMA C-Face* Available Combinations				
				n_1 =1750 rpm				n_1 =1150 rpm								
	Total	Helical Gears	Worm Gears	n_2	$T_{2\,max}$	HP_{max}	η	n_2	$T_{2\,max}$	HP_{max}	η					
	i_{tot}	i_1	$\frac{z_2}{z_1} = i_2$	[rpm]	[lb-in]	[hp]	[%]	[rpm]	[lb-in]	[hp]	[%]	56C	140TC	180TC	210TC	250TC
SK 02040	4.40	1.15	23/6	398	407	1.50	88	262	469	0.99	88	X				
	5.09	1.33	23/6	344	425	1.50	88	227	487	0.99	87	X				
	6.63	1.73	23/6	264	478	1.50	88	174	540	0.99	87	X				
	7.51	1.96	23/6	233	504	1.50	87	154	566	0.99	86	X				
	8.82	1.15	23/3	198	575	1.50	84	131	664	0.99	83	X				
	10.20	1.33	23/3	172	602	1.50	84	113	690	0.99	82	X				
	13.27	1.73	23/3	132	646	1.50	83	87	726	0.99	82	X				
	15.03	1.96	23/3	116	664	1.47	83	77	743	1.13	81	X				
	17.10	2.23	23/3	102	690	1.37	82	68	761	1.02	81	X				
	19.56	2.55	23/3	89	708	1.22	82	59	770	0.90	80	X				
	21.95	1.33	33/2	80	646	1.10	75	53	743	0.86	73	X				
	28.55	1.73	33/2	61	664	0.87	74	40	752	0.66	72	X*				
	32.34	1.96	33/2	54	690	0.80	73	36	770	0.62	72	X*				
	36.80	2.23	33/2	48	717	0.75	73	31	788	0.55	71	X*				
	42.08	2.55	33/2	42	752	0.70	72	27	823	0.51	70	X*				
	44.85	1.15	39/1	39	717	0.74	60	26	823	0.59	57	X*				
	46.79	6.10	23/3	37	885	0.66	79	25	938	0.48	78	X*				
	51.87	1.33	39/1	34	717	0.66	59	22	823	0.51	56	X*				
	59.83	7.80	23/3	29	885	0.51	79	19	938	0.36	78	X*				
	67.47	1.73	39/1	26	726	0.52	57	17	814	0.40	55	X*				
	76.44	1.96	39/1	23	752	0.48	57	15	841	0.38	54	X*				
	86.97	2.23	39/1	20	770	0.44	56	13	850	0.34	53	X*				
	99.45	2.55	39/1	18	814	0.43	55	12	894	0.32	53	X*				
	100.65	6.10	33/2	17	885	0.35	69	11	938	0.24	68	X*				
	115.05	2.95	39/1	15	832	0.36	54	10	903	0.28	52	X*				
	128.70	7.80	33/2	14	885	0.29	68	9.0	938	0.20	67	X*				
	237.90	6.10	39/1	7.4	885	0.20	51	4.9	938	0.15	49	X*				
	304.20	7.80	39/1	5.8	885	0.16	50	3.8	938	0.12	49	X*				

* Caution - The motor power may exceed the gear unit's mechanical torque capacity. Limits Based on 1750rpm input speed.
◈ The mechanical power limit of the solid input shaft type "W" may limit the reducer rating.
All ratings are mechanical. See page 14 for thermal considerations.

lb	W	56C
SK 02040	24	33

Send Quote Requests to info@automatedpt.com
Call +1(800)985-6929 To Order or Order Online At Nordgearmotors.com




SK 02040 NEMA-C + W Ratings & Combinations

Model Type	Gear Ratio			n_2 = Output Speed $T_{2\,max}$ = Output Torque* HP_{max} = Input power ◈ η = Efficiencies												NEMA C-Face* Available Combinations				
	Total	Helical Gears	Worm Gears	n_1 = 875 rpm				n_1 = 580 rpm				n_1 = 300 rpm								
	i_{tot}	i_1	$\frac{z_2}{z_1} = i_2$	n_2 [rpm]	$T_{2\,max}$ [lb-in]	HP_{max} [hp]	η [%]	n_2 [rpm]	$T_{2\,max}$ [lb-in]	HP_{max} [hp]	η [%]	n_2 [rpm]	$T_{2\,max}$ [lb-in]	HP_{max} [hp]	η [%]	56C	140TC	180TC	210TC	250TC
SK 02040	4.40	1.15	23/6	199	504	0.75	87	132	558	0.50	86	68	620	0.27	85	X				
	5.09	1.33	23/6	172	531	0.75	87	114	575	0.50	86	59	628	0.27	84	X				
	6.63	1.73	23/6	132	575	0.75	86	87	611	0.50	85	45	673	0.27	84	X				
	7.51	1.96	23/6	117	593	0.75	86	77	637	0.50	85	40	690	0.27	84	X				
	8.82	1.15	23/3	99	717	0.75	82	66	788	0.50	81	34	876	0.27	79	X				
	10.20	1.33	23/3	86	743	0.75	82	57	814	0.50	80	29	894	0.27	79	X				
	13.27	1.73	23/3	66	770	0.75	81	44	832	0.50	80	23	912	0.27	78	X				
	15.03	1.96	23/3	58	779	0.90	80	39	832	0.66	79	20	912	0.38	78	X				
	17.10	2.23	23/3	51	805	0.82	80	34	850	0.58	79	18	929	0.34	78	X				
	19.56	2.55	23/3	45	814	0.72	80	30	858	0.52	79	15	929	0.28	78	X				
	21.95	1.33	33/2	40	805	0.71	72	26	876	0.52	70	14	965	0.31	68	X				
	28.55	1.73	33/2	31	796	0.55	71	20	850	0.39	69	11	938	0.24	67	X*				
	32.34	1.96	33/2	27	814	0.50	70	18	867	0.36	69	9.30	947	0.21	67	X*				
	36.80	2.23	33/2	24	832	0.46	70	16	885	0.32	69	8.20	965	0.19	67	X*				
	42.08	2.55	33/2	21	858	0.42	69	14	912	0.29	68	7.10	982	0.16	67	X*				
	44.85	1.15	39/1	20	894	0.51	56	13	982	0.39	53	6.70	1089	0.23	50	X*				
	46.79	6.10	23/3	19	974	0.38	78	12	1009	0.25	77	6.40	1071	0.15	77	X*				
	51.87	1.33	39/1	17	885	0.43	55	11	965	0.32	52	5.80	1062	0.20	50	X*				
	59.83	7.80	23/3	15	956	0.29	78	9.7	1000	0.20	77	5.00	1071	0.11	77	X*				
	67.47	1.73	39/1	13	867	0.34	53	8.6	929	0.25	51	4.40	1027	0.15	49	X*				
	76.44	1.96	39/1	11	885	0.29	53	7.6	947	0.23	51	3.90	1035	0.13	49	X*				
	86.97	2.23	39/1	10	894	0.27	52	6.7	947	0.20	50	3.40	1035	0.12	48	X*				
	99.45	2.55	39/1	8.8	929	0.25	51	5.8	982	0.17	50	3.00	1062	0.11	48	X*				
	100.65	6.10	33/2	8.7	974	0.20	67	5.8	1009	0.13	66	3.00	1071	0.08	66	X*				
	115.05	2.95	39/1	7.6	938	0.23	51	5.0	991	0.16	49	2.60	1062	0.09	48	X*				
	128.70	7.80	33/2	6.8	956	0.15	67	4.5	1000	0.11	66	2.30	1071	0.05	66	X*				
	237.90	6.10	39/1	3.7	974	0.12	49	2.4	1009	0.08	48	1.30	1071	0.05	47	X*				
	304.20	7.80	39/1	2.9	956	0.09	48	1.9	1000	0.07	47	0.99	1071	0.04	47	X*				

W + NEMA

* Caution - The motor power may exceed the gear unit's mechanical torque capacity. Limits Based on 1750rpm input speed.
◈ The mechanical power limit of the solid input shaft type "W" may limit the reducer rating.
All ratings are mechanical. See page 14 for thermal considerations.

lb	W	56C
SK 02040	24	33

Send Quote Requests to info@automatedpt.com
Call +1(800)985-6929 To Order or Order Online At Nordgearmotors.com

SK 02050
NEMA-C + W
Ratings & Combinations





DRIVESYSTEMS

Model Type	Gear Ratio			n_2 = Output Speed $T_{2\,max}$ = Output Torque* HP_{max} = Input power ◈ η = Efficiencies								NEMA C-Face* Available Combinations				
				n_1 =1750 rpm				n_1 =1150 rpm								
	i_{tot}	i_1	$\frac{z_2}{z_1} = i_2$	n_2 [rpm]	$T_{2\,max}$ [lb-in]	HP_{max} [hp]	η [%]	n_2 [rpm]	$T_{2\,max}$ [lb-in]	HP_{max} [hp]	η [%]	56C	140TC	180TC	210TC	250TC
SK 02050	7.13	1.38	31/6	245	929	2.00	89	162	1062	1.32	88	X	X			
	8.17	1.58	31/6	214	974	2.00	89	141	1097	1.32	88	X	X			
	9.41	1.82	31/6	186	974	2.00	88	123	1089	1.32	87	X	X			
	11.63	2.25	31/6	150	1000	2.00	88	99	1106	1.32	87	X	X			
	13.18	2.55	31/6	133	1062	2.00	87	88	1159	1.32	86	X	X			
	14.72	1.38	32/3	119	1000	2.00	85	78	1150	1.32	83	X	X			
	16.86	1.58	32/3	104	1062	2.00	84	69	1204	1.32	83	X	X			
	19.42	1.82	32/3	90	1283	2.00	84	59	1443	1.32	82	X	X			
	24.01	2.25	32/3	73	1372	1.92	83	48	1513	1.41	82	X	X*			
	27.21	2.55	32/3	64	1372	1.68	83	42	1496	1.23	81	X	X*			
	30.94	2.90	32/3	57	1372	1.51	82	37	1487	1.07	81	X	X*			
	35.55	1.58	45/2	49	1372	1.41	76	32	1549	1.06	74	X	X*			
	40.95	1.82	45/2	43	1372	1.25	75	28	1540	0.94	73	X	X*			
	50.63	2.25	45/2	35	1372	1.03	74	23	1513	0.76	72	X	X*			
	57.38	2.55	45/2	30	1487	0.97	73	20	1628	0.72	71	X*	X*			
	65.25	2.90	45/2	27	1487	0.87	73	18	1611	0.64	71	X*	X*			
	80.58	1.58	51/1	22	1487	0.87	60	14	1682	0.66	57	X*	X*			
	92.82	1.82	51/1	19	1487	0.76	59	12	1673	0.56	56	X*	X*			
	114.75	2.25	51/1	15	1487	0.62	57	10	1637	0.48	54	X*	X*			
	130.05	2.55	51/1	13	1487	0.55	56	8.9	1628	0.43	54	X*	X*			
	147.90	2.90	51/1	12	1549	0.54	55	7.8	1682	0.39	53	X*	X*			
	170.10	7.56	45/2	10	1637	0.38	69	6.8	1735	0.28	68	X*				
	194.18	8.63	45/2	9.0	1637	0.35	68	5.9	1717	0.24	67	X*				
	231.41	10.29	45/2	7.6	1637	0.29	68	5.0	1708	0.20	67	X*				
	341.70	6.70	51/1	5.1	1637	0.25	51	3.4	1743	0.19	49	X*	X*			
	385.56	7.56	51/1	4.5	1637	0.23	50	3.0	1735	0.17	49	X*				
	440.13	8.63	51/1	4.0	1637	0.20	50	2.6	1717	0.15	49	X*				
	524.79	10.29	51/1	3.3	1637	0.17	49	2.2	1708	0.12	48	X*				

W + NEMA

* Caution - The motor power may exceed the gear unit's mechanical torque capacity. Limits Based on 1750rpm input speed.
◈ The mechanical power limit of the solid input shaft type "W" may limit the reducer rating.
All ratings are mechanical. See page 14 for thermal considerations.

lb	W	56C	140TC
SK 02050	44	55	55

Send Quote Requests to info@automatedpt.com
Call +1(800)985-6929 To Order or Order Online At Nordgearmotors.com





SK 02050
NEMA-C + W
Ratings & Combinations

Model Type	Gear Ratio			n_2 = Output Speed $T_{2\,max}$ = Output Torque* HP_{max} = Input power ◈ η = Efficiencies												NEMA C-Face* Available Combinations				
	Total	Helical Gears	Worm Gears	n_1 = 875 rpm				n_1 = 580 rpm				n_1 = 300 rpm								
	i_{tot}	i_1	$\frac{z_2}{z_1} = i_2$	n_2 [rpm]	$T_{2\,max}$ [lb-in]	HP_{max} [hp]	η [%]	n_2 [rpm]	$T_{2\,max}$ [lb-in]	HP_{max} [hp]	η [%]	n_2 [rpm]	$T_{2\,max}$ [lb-in]	HP_{max} [hp]	η [%]	56C	140TC	180TC	210TC	250TC
SK 02050	7.13	1.38	31/6	123	1142	1.00	87	81	1204	0.66	86	42	1186	0.36	85	X	X			
	8.17	1.58	31/6	107	1177	1.00	87	71	1221	0.66	86	37	1195	0.36	84	X	X			
	9.41	1.82	31/6	93	1159	1.00	86	62	1230	0.66	85	32	1212	0.36	84	X	X			
	11.63	2.25	31/6	75	1159	1.00	86	50	1230	0.66	85	26	1239	0.36	84	X	X			
	13.18	2.55	31/6	66	1212	1.00	86	44	1266	0.66	85	23	1248	0.36	84	X	X			
	14.72	1.38	32/3	59	1230	1.00	82	39	1336	0.66	81	20	1478	0.36	79	X	X			
	16.86	1.58	32/3	52	1283	1.00	82	34	1389	0.66	80	18	1522	0.36	79	X	X			
	19.42	1.82	32/3	45	1522	1.00	81	30	1637	0.66	80	15	1788	0.36	79	X	X			
	24.01	2.25	32/3	36	1593	1.13	81	24	1682	0.80	80	12	1841	0.46	78	X	X*			
	27.21	2.55	32/3	32	1575	1.01	80	21	1664	0.70	79	11	1797	0.40	78	X	X*			
	30.94	2.90	32/3	28	1549	0.86	80	19	1646	0.63	79	9.7	1761	0.35	78	X	X*			
	35.55	1.58	45/2	25	1655	0.91	72	16	1788	0.64	70	8.4	1965	0.39	68	X	X*			
	40.95	1.82	45/2	21	1628	0.75	72	14	1743	0.55	70	7.3	1912	0.32	68	X	X*			
	50.63	2.25	45/2	17	1593	0.60	71	11	1682	0.43	69	5.9	1841	0.25	67	X	X*			
	57.38	2.55	45/2	15	1699	0.58	70	10	1797	0.42	69	5.2	1947	0.24	67	X*	X*			
	65.25	2.90	45/2	13	1682	0.50	70	8.9	1779	0.38	68	4.6	1903	0.20	67	X*	X*			
	80.58	1.58	51/1	11	1797	0.58	55	7.2	1938	0.43	52	3.7	2133	0.25	50	X*	X*			
	92.82	1.82	51/1	9.4	1770	0.48	54	6.2	1894	0.36	52	3.2	2071	0.21	49	X*	X*			
	114.75	2.25	51/1	7.6	1726	0.39	53	5.1	1823	0.29	51	2.6	1991	0.17	49	X*	X*			
	130.05	2.55	51/1	6.7	1699	0.35	52	4.5	1797	0.25	50	2.3	1947	0.15	48	X*	X*			
	147.90	2.90	51/1	5.9	1752	0.32	51	3.9	1850	0.23	50	2.0	1982	0.13	48	X*	X*			
	170.10	7.56	45/2	5.1	1779	0.21	67	3.4	1850	0.15	66	1.8	1974	0.08	66	X*				
	194.18	8.63	45/2	4.5	1761	0.19	67	3.0	1832	0.13	66	1.5	1965	0.07	66	X*				
	231.41	10.29	45/2	3.8	1752	0.16	66	2.5	1814	0.11	66	1.3	1867	0.05	65	X*				
	341.70	6.70	51/1	2.6	1797	0.15	49	1.7	1867	0.11	48	0.88	1982	0.05	47	X*	X*			
	385.56	7.56	51/1	2.3	1779	0.13	48	1.5	1850	0.09	48	0.78	1974	0.05	47	X*				
	440.13	8.63	51/1	2.0	1761	0.12	48	1.3	1832	0.08	47	0.68	1965	0.04	47	X*				
	524.79	10.29	51/1	1.7	1752	0.09	48	1.1	1814	0.07	47	0.57	1947	0.04	47	X*				

* Caution - The motor power may exceed the gear unit's mechanical torque capacity. Limits Based on 1750rpm input speed.
◈ The mechanical power limit of the solid input shaft type "W" may limit the reducer rating.
All ratings are mechanical. See page 14 for thermal considerations.

lb	W	56C	140TC
SK 02050	44	55	55

Send Quote Requests to info@automatedpt.com
Call +1(800)985-6929 To Order or Order Online At Nordgearmotors.com

SK 13050
NEMA-C + W
Ratings & Combinations





DRIVESYSTEMS

Model Type	Gear Ratio			n_2 = Output Speed $T_{2\,max}$ = Output Torque* HP_{max} = Input power ◈ η = Efficiencies								NEMA C-Face* Available Combinations				
				n_1 =1750 rpm				n_1 =1150 rpm								
	i_{tot}	i_1	$\frac{z_2}{z_1} = i_2$	n_2 [rpm]	$T_{2\,max}$ [lb-in]	HP_{max} [hp]	η [%]	n_2 [rpm]	$T_{2\,max}$ [lb-in]	HP_{max} [hp]	η [%]	56C	140TC	180TC	210TC	250TC
SK 13050	**41.74**	8.07	31/6	42	974	0.50	85	28	974	0.33	84	X*				
	48.08	9.30	31/6	36	974	0.50	84	24	1018	0.33	84	X*				
	59.44	11.50	31/6	29	1150	0.50	84	19	1195	0.33	83	X*				
	67.37	13.03	31/6	26	1150	0.50	84	17	1195	0.33	83	X*				
	76.61	14.82	31/6	23	1239	0.50	84	15	1248	0.33	83	X*				
	86.15	8.07	32/3	20	1593	0.50	79	13	1682	0.33	78	X*				
	99.23	9.30	32/3	18	1682	0.50	79	12	1761	0.33	78	X*				
	122.68	11.50	32/3	14	1726	0.50	78	9.4	1788	0.34	78	X*				
	139.04	13.03	32/3	13	1726	0.46	78	8.3	1797	0.31	78	X*				
	158.12	14.82	32/3	11	1726	0.39	78	7.3	1797	0.27	77	X*				
	181.66	8.07	45/2	9.6	1726	0.39	68	6.4	1823	0.28	67	X*				
	209.25	9.30	45/2	8.4	1726	0.34	68	5.5	1805	0.24	67	X*				
	293.19	13.03	45/2	6.0	1726	0.24	67	3.9	1797	0.16	67	X*				
	333.43	14.82	45/2	5.2	1726	0.21	67	3.5	1797	0.15	66	X*				
	411.76	8.07	51/1	4.3	1726	0.24	50	2.8	1823	0.16	49	X*				
	474.31	9.30	51/1	3.7	1726	0.20	50	2.4	1805	0.13	49	X*				
	586.37	11.50	51/1	3.0	1726	0.17	49	2.0	1788	0.12	48	X*				
	664.56	13.03	51/1	2.6	1726	0.15	49	1.7	1797	0.11	48	X*				
	755.77	14.82	51/1	2.3	1726	0.13	48	1.5	1797	0.09	48	X*				
	869.21	38.63	45/2	2.0	1726	0.08	66	1.3	1805	0.05	65	X*				
	992.23	44.10	45/2	1.8	1726	0.08	66	1.2	1797	0.05	65	X*				
	1332.04	59.20	45/2	1.3	1726	0.05	65	0.87	1779	0.04	65	X*				
	1746.09	34.24	51/1	1.0	1726	0.05	47	0.66	1814	0.04	47	X*				
	1970.21	38.63	51/1	0.89	1726	0.05	47	0.59	1805	0.04	47	X*				
	2249.06	44.10	51/1	0.78	1726	0.04	47	0.51	1797	0.03	47	X*				
	3019.29	59.20	51/1	0.58	1726	0.04	47	0.38	1779	0.03	46	X*				

W + NEMA

* Caution - The motor power may exceed the gear unit's mechanical torque capacity. Limits Based on 1750rpm input speed.
◈ The mechanical power limit of the solid input shaft type "W" may limit the reducer rating.
All ratings are mechanical. See page 14 for thermal considerations.

lb	W	56C
SK 13050	55	66

Send Quote Requests to info@automatedpt.com
Call +1(800)985-6929 To Order or Order Online At Nordgearmotors.com




SK 13050 NEMA-C + W Ratings & Combinations

Model Type	Gear Ratio			n_2 = Output Speed $T_{2\,max}$ = Output Torque* HP_{max} = Input power ◈ η = Efficiencies												NEMA C-Face* Available Combinations				
	Total	Helical Gears	Worm Gears	n_1 = 875 rpm				n_1 = 580 rpm				n_1 = 300 rpm								
	i_{tot}	i_1	$\frac{z_2}{z_1} = i_2$	n_2 [rpm]	$T_{2\,max}$ [lb-in]	HP_{max} [hp]	η [%]	n_2 [rpm]	$T_{2\,max}$ [lb-in]	HP_{max} [hp]	η [%]	n_2 [rpm]	$T_{2\,max}$ [lb-in]	HP_{max} [hp]	η [%]	56C	140TC	180TC	210TC	250TC
SK 13050	**41.74**	8.07	31/6	21	974	0.25	84	14	965	0.17	83	7.2	965	0.09	83	X*				
	48.08	9.30	31/6	18	1044	0.25	83	12	1062	0.17	83	6.2	1062	0.09	83	X*				
	59.44	11.50	31/6	15	1221	0.25	83	9.8	1221	0.17	83	5.0	1221	0.09	83	X*				
	67.37	13.03	31/6	13	1230	0.25	83	8.6	1230	0.17	83	4.5	1230	0.09	83	X*				
	76.61	14.82	31/6	11	1248	0.25	83	7.6	1248	0.17	83	3.9	1230	0.09	82	X*				
	86.15	8.07	32/3	10	1717	0.25	78	6.7	1761	0.17	77	3.5	1761	0.09	77	X*				
	99.23	9.30	32/3	8.8	1805	0.25	78	5.8	1876	0.17	77	3.0	2009	0.09	77	X*				
	122.68	11.50	32/3	7.1	1850	0.27	77	4.7	1903	0.19	77	2.4	2044	0.11	77	X*				
	139.04	13.03	32/3	6.3	1841	0.24	77	4.2	1912	0.16	77	2.2	2044	0.09	77	X*				
	158.12	14.82	32/3	5.5	1841	0.21	77	3.7	1920	0.15	77	1.9	2036	0.08	77	X*				
	181.66	8.07	45/2	4.8	1867	0.21	67	3.2	1947	0.15	66	1.7	2080	0.08	66	X*				
	209.25	9.30	45/2	4.2	1850	0.19	67	2.8	1929	0.13	66	1.4	2062	0.07	66	X*				
	293.19	13.03	45/2	3.0	1841	0.13	66	2.0	1912	0.09	66	1.0	2044	0.05	65	X*				
	333.43	14.82	45/2	2.6	1841	0.12	66	1.7	1920	0.08	66	0.90	2036	0.04	65	X*				
	411.76	8.07	51/1	2.1	1867	0.13	48	1.4	1947	0.09	48	0.73	2080	0.05	47	X*				
	474.31	9.30	51/1	1.8	1850	0.11	48	1.2	1929	0.08	47	0.63	2062	0.04	47	X*				
	586.37	11.50	51/1	1.5	1850	0.09	48	0.99	1903	0.07	47	0.51	2044	0.04	47	X*				
	664.56	13.03	51/1	1.3	1841	0.08	47	0.87	1912	0.05	47	0.45	2044	0.03	47	X*				
	755.77	14.82	51/1	1.2	1841	0.08	47	0.77	1920	0.05	47	0.40	2036	0.03	46	X*				
	869.21	38.63	45/2	1.0	1841	0.04	65	0.67	1885	0.03	65	0.35	2018	0.01	65	X*				
	992.23	44.10	45/2	0.88	1832	0.04	65	0.58	1858	0.03	65	0.30	2027	0.01	65	X*				
	1332.04	59.20	45/2	0.66	1797	0.03	65	0.44	1832	0.01	65	0.23	2044	0.01	65	X*				
	1746.09	34.24	51/1	0.50	1858	0.03	47	0.33	1903	0.03	46	0.17	2000	0.01	46	X*				
	1970.21	38.63	51/1	0.44	1841	0.03	46	0.29	1885	0.01	46	0.15	2018	0.01	46	X*				
	2249.06	44.10	51/1	0.39	1832	0.03	46	0.26	1858	0.01	46	0.13	2027	0.01	46	X*				
	3019.29	59.20	51/1	0.29	1797	0.01	46	0.19	1832	0.01	46	0.10	2044	0.01	46	X*				

* Caution - The motor power may exceed the gear unit's mechanical torque capacity. Limits Based on 1750rpm input speed.
◈ The mechanical power limit of the solid input shaft type "W" may limit the reducer rating.
All ratings are mechanical. See page 14 for thermal considerations.

lb	W	56C
SK 13050	55	66

Send Quote Requests to info@automatedpt.com
Call +1(800)985-6929 To Order or Order Online At Nordgearmotors.com

SK 12063
NEMA-C + W
Ratings & Combinations





DRIVESYSTEMS

Model Type	Gear Ratio			n_2 = Output Speed $T_{2\,max}$ = Output Torque* HP_{max} = Input power ◈ η = Efficiencies								NEMA C-Face* Available Combinations				
				n_1 =1750 rpm				n_1 =1150 rpm								
	Total	Helical Gears	Worm Gears	n_2	$T_{2\,max}$	HP_{max}	η	n_2	$T_{2\,max}$	HP_{max}	η					
	i_{tot}	i_1	$\frac{z_2}{z_1} = i_2$	[rpm]	[lb-in]	[hp]	[%]	[rpm]	[lb-in]	[hp]	[%]	56C	140TC	180TC	210TC	250TC
SK 12063	7.43	1.35	33/6	236	1381	3.00	90	155	1584	1.98	89	X	X	X*		
	8.47	1.54	33/6	207	1469	3.00	90	136	1664	1.98	89	X	X	X*		
	9.96	1.81	33/6	176	1504	3.00	89	116	1690	1.98	88	X	X	X*		
	11.22	2.04	33/6	156	1549	3.00	89	103	1717	1.98	88	X	X	X*		
	12.76	2.32	33/6	137	1593	3.00	89	91	1752	1.98	87	X	X	X*		
	15.57	2.83	33/6	112	1682	3.00	88	74	1823	1.98	87	X	X	X*		
	18.99	1.54	37/3	92	1903	3.00	85	61	2159	1.98	83	X	X	X*		
	22.32	1.81	37/3	78	2168	3.00	84	52	2434	1.98	83	X	X	X*		
	25.15	2.04	37/3	70	2168	2.87	84	46	2407	2.14	82	X	X	X*		
	28.61	2.32	37/3	61	2168	2.53	83	40	2390	1.85	82	X	X	X*		
	34.89	2.83	37/3	50	2319	2.24	82	33	2522	1.64	81	X	X	X*		
	38.92	1.81	43/2	45	2168	2.01	77	30	2434	1.54	75	X	X*	X*		
	43.86	2.04	43/2	40	2212	1.82	77	26	2460	1.37	74	X	X*	X*		
	49.88	2.32	43/2	35	2319	1.69	76	23	2549	1.27	73	X	X*	X*		
	60.85	2.83	43/2	29	2478	1.51	75	19	2690	1.13	72	X	X*	X*		
	68.37	3.18	43/2	26	2611	1.46	74	17	2823	1.06	72	X	X*			
	77.40	3.60	43/2	23	2699	1.35	73	15	2894	0.97	71	X	X*			
	92.31	1.81	51/1	19	2611	1.27	62	13	2929	1.05	58	X	X*	X*		
	104.04	2.04	51/1	17	2611	1.15	61	11	2903	0.88	57	X	X*	X*		
	118.32	2.32	51/1	15	2611	1.06	59	9.8	2876	0.80	56	X	X*	X*		
	144.33	2.83	51/1	12	2655	0.87	58	8.0	2885	0.67	55	X*	X*	X*		
	162.18	3.18	51/1	11	2744	0.84	57	7.1	2965	0.62	54	X*	X*			
	183.60	3.60	51/1	9.5	2876	0.78	56	6.3	3089	0.58	53	X*	X*			
	195.86✦	9.11	43/2	8.9	3186	0.66	69	5.9	3336	0.47	67	X*				
	223.17✦	10.38	43/2	7.8	3186	0.58	68	5.2	3319	0.40	67	X*				
	264.24✦	12.29	43/2	6.6	3098	0.48	67	4.4	3089	0.32	66	X*				
	413.10✦	8.10	51/1	4.2	3186	0.42	51	2.8	3354	0.31	49	X*	X*			
	464.61✦	9.11	51/1	3.8	3186	0.39	50	2.5	3336	0.28	48	X*				
	529.38✦	10.38	51/1	3.3	3186	0.34	50	2.2	3319	0.24	48	X*				
	626.79✦	12.29	51/1	2.8	3186	0.29	49	1.8	3310	0.20	48	X*				

* Caution - The motor power may exceed the gear unit's mechanical torque capacity. Limits Based on 1750rpm input speed.
✦ Non-footed units only.
◈ The mechanical power limit of the solid input shaft type "W" may limit the reducer rating.
All ratings are mechanical. See page 14 for thermal considerations.

lb	W	56C	140TC	180TC
SK 12063	53	64	64	79

Send Quote Requests to info@automatedpt.com
Call +1(800)985-6929 To Order or Order Online At Nordgearmotors.com





SK 12063
NEMA-C + W
Ratings & Combinations

Model Type	Gear Ratio			n_2 = Output Speed $T_{2\,max}$ = Output Torque* HP_{max} = Input power ◈ η = Efficiencies												NEMA C-Face* Available Combinations				
	Total	Helical Gears	Worm Gears	n_1 = 875 rpm				n_1 = 580 rpm				n_1 = 300 rpm								
	i_{tot}	i_1	$\frac{z_2}{z_1} = i_2$	n_2 [rpm]	$T_{2\,max}$ [lb-in]	HP_{max} [hp]	η [%]	n_2 [rpm]	$T_{2\,max}$ [lb-in]	HP_{max} [hp]	η [%]	n_2 [rpm]	$T_{2\,max}$ [lb-in]	HP_{max} [hp]	η [%]	56C	140TC	180TC	210TC	250TC
SK 12063	7.43	1.35	33/6	118	1708	1.50	88	78	1858	0.99	87	40	2044	0.54	85	X	X	X*		
	8.47	1.54	33/6	103	1779	1.50	88	68	1929	0.99	87	35	2115	0.54	85	X	X	X*		
	9.96	1.81	33/6	88	1788	1.50	87	58	1920	0.99	86	30	2097	0.54	85	X	X	X*		
	11.22	2.04	33/6	78	1814	1.50	87	52	1929	0.99	86	27	2106	0.54	84	X	X	X*		
	12.76	2.32	33/6	69	1850	1.50	87	45	1947	0.99	86	24	2124	0.54	84	X	X	X*		
	15.57	2.83	33/6	56	1903	1.50	86	37	2018	0.99	85	19	2159	0.54	84	X	X	X*		
	18.99	1.54	37/3	46	2310	1.50	82	31	2496	0.99	80	16	2735	0.54	78	X	X	X*		
	22.32	1.81	37/3	39	2575	1.50	81	26	2761	0.99	80	13	3027	0.54	77	X	X	X*		
	25.15	2.04	37/3	35	2540	1.74	81	23	2699	1.25	79	12	2956	0.74	77	X	X	X*		
	28.61	2.32	37/3	31	2513	1.54	80	20	2646	1.06	79	10	2885	0.59	77	X	X	X*		
	34.89	2.83	37/3	25	2628	1.30	80	17	2779	0.97	78	8.6	2982	0.54	76	X	X	X*		
	38.92	1.81	43/2	22	2575	1.23	73	15	2761	0.92	71	7.7	3027	0.55	68	X	X*	X*		
	43.86	2.04	43/2	20	2593	1.14	72	13	2761	0.82	70	6.8	3018	0.48	68	X	X*	X*		
	49.88	2.32	43/2	18	2690	1.07	72	12	2832	0.76	70	6.0	3089	0.44	67	X	X*	X*		
	60.85	2.83	43/2	14	2805	0.87	71	9.50	2974	0.64	69	4.9	3186	0.38	67	X	X*			
	68.37	3.18	43/2	13	2920	0.86	70	8.50	3106	0.62	68	4.4	3310	0.35	66	X	X*			
	77.40	3.60	43/2	11	3000	0.75	70	7.50	3177	0.55	68	3.9	3390	0.32	66	X	X*			
	92.31	1.81	51/1	9.5	3106	0.83	56	6.30	3328	0.63	53	3.2	3646	0.38	49	X	X*	X*		
	104.04	2.04	51/1	8.4	3062	0.74	55	5.60	3257	0.55	52	2.9	3558	0.34	49	X	X*	X*		
	118.32	2.32	51/1	7.4	3027	0.66	54	4.90	3186	0.48	51	2.5	3478	0.28	49	X	X*	X*		
	144.33	2.83	51/1	6.1	3009	0.55	53	4.00	3186	0.40	50	2.1	3416	0.24	48	X*	X*	X*		
	162.18	3.18	51/1	5.4	3071	0.51	52	3.60	3266	0.38	50	1.8	3478	0.20	48	X*	X*			
	183.60	3.60	51/1	4.8	3195	0.48	51	3.20	3390	0.35	49	1.6	3611	0.20	47	X*	X*			
	195.86✦	9.11	43/2	4.5	3416	0.38	66	3.00	3558	0.25	66	1.5	3814	0.13	65	X*				
	223.17✦	10.38	43/2	3.9	3407	0.32	66	2.60	3540	0.23	65	1.3	3797	0.12	65	X*				
	264.24✦	12.29	43/2	3.3	3089	0.24	66	2.20	3044	0.16	65	1.1	2991	0.08	64	X*				
	413.10✦	8.10	51/1	2.1	3443	0.24	48	1.40	3584	0.17	47	0.73	3832	0.09	46	X*	X*			
	464.61✦	9.11	51/1	1.9	3416	0.21	48	1.20	3558	0.15	47	0.65	3814	0.08	46	X*				
	529.38✦	10.38	51/1	1.7	3407	0.20	47	1.10	3540	0.13	46	0.57	3797	0.08	46	X*				
	626.79✦	12.29	51/1	1.4	3407	0.16	47	0.93	3531	0.11	46	0.48	3770	0.07	45	X*				

W + NEMA

* Caution - The motor power may exceed the gear unit's mechanical torque capacity. Limits Based on 1750rpm input speed.
✦ Non-footed units only.
◈ The mechanical power limit of the solid input shaft type "W" may limit the reducer rating.
All ratings are mechanical. See page 14 for thermal considerations.

lb	W	56C	140TC	180TC
SK 12063	53	64	64	79

Send Quote Requests to info@automatedpt.com
Call +1(800)985-6929 To Order or Order Online At Nordgearmotors.com

SK 13063
NEMA-C + W
Ratings & Combinations

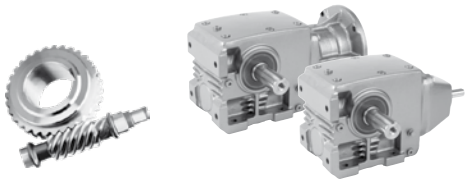

DRIVESYSTEMS

Model Type	Gear Ratio			n_2 = Output Speed $T_{2\,max}$ = Output Torque* HP_{max} = Input power ◈ η = Efficiencies								NEMA C-Face* Available Combinations				
				n_1 =1750 rpm				n_1 =1150 rpm								
	Total	Helical Gears	Worm Gears	n_2	$T_{2\,max}$	HP_{max}	η	n_2	$T_{2\,max}$	HP_{max}	η					
	i_{tot}	i_1	$\frac{z_2}{z_1} = i_2$	[rpm]	[lb-in]	[hp]	[%]	[rpm]	[lb-in]	[hp]	[%]	56C	140TC	180TC	210TC	250TC
SK 13063	65.20	11.86	33/6	27	1504	0.50	84	18	1504	0.33	84	X*				
	79.54	14.46	33/6	22	1770	0.50	84	15	1752	0.33	83	X*				
	97.03	7.87	37/3	18	2036	0.50	78	12	2009	0.33	77	X*				
	114.04	9.25	37/3	15	2301	0.50	78	10	2328	0.33	77	X*				
	128.53	10.42	37/3	14	2655	0.50	77	9.0	2620	0.33	76	X*				
	146.17	11.86	37/3	12	2920	0.50	77	7.9	2947	0.33	76	X*				
	178.31	14.46	37/3	9.80	3009	0.50	77	6.5	3133	0.33	76	X*				
	198.86	9.25	43/2	8.80	3186	0.50	69	5.8	3336	0.33	67	X*				
	224.12	10.42	43/2	7.80	3274	0.50	68	5.2	3407	0.33	67	X*				
	254.89	11.86	43/2	6.90	3274	0.50	68	4.5	3398	0.33	66	X*				
	310.92	14.46	43/2	5.60	3363	0.44	67	3.7	3505	0.31	66	X*				
	349.37	16.25	43/2	5.00	3363	0.40	67	3.3	3513	0.28	66	X*				
	395.51	18.40	43/2	4.40	3363	0.36	66	2.9	3505	0.25	65	X*				
	471.70	9.25	51/1	3.70	3363	0.39	50	2.4	3522	0.28	48	X*				
	531.64	10.42	51/1	3.30	3363	0.35	50	2.2	3496	0.25	48	X*				
	604.62	11.86	51/1	2.90	3363	0.32	49	1.9	3487	0.21	48	X*				
	737.53	14.46	51/1	2.40	3363	0.27	48	1.6	3505	0.19	47	X*				
	938.20	18.40	51/1	1.90	3363	0.21	48	1.2	3505	0.15	47	X*				
	1140.40✦	53.04	43/2	1.50	3363	0.12	65	1.0	3478	0.08	64	X*				
	1343.63✦	62.49	43/2	1.30	3363	0.11	65	0.86	3452	0.07	64	X*				
	2110.94✦	41.39	51/1	0.83	3363	0.09	46	0.55	3505	0.07	46	X*				
	2374.16✦	46.55	51/1	0.74	3363	0.08	46	0.49	3487	0.05	45	X*				
	2705.13✦	53.04	51/1	0.65	3363	0.08	46	0.43	3478	0.05	45	X*				
	3631.55✦	71.21	51/1	0.48	3363	0.05	45	0.32	3443	0.04	45	X*				

W + NEMA

* Caution - The motor power may exceed the gear unit's mechanical torque capacity. Limits Based on 1750rpm input speed.
✦ Non-footed units only.
◈ The mechanical power limit of the solid input shaft type "W" may limit the reducer rating.
All ratings are mechanical. See page 14 for thermal considerations.

lb	W	56C
SK 13063	64	75

Send Quote Requests to info@automatedpt.com
Call +1(800)985-6929 To Order or Order Online At Nordgearmotors.com





SK 13063 NEMA-C + W Ratings & Combinations

Model Type	Gear Ratio			n_2 = Output Speed $T_{2\,max}$ = Output Torque* HP_{max} = Input power ◈ η = Efficiencies												NEMA C-Face* Available Combinations				
	Total	Helical Gears	Worm Gears	n_1 = 875 rpm				n_1 = 580 rpm				n_1 = 300 rpm								
	i_{tot}	i_1	$\frac{z_2}{z_1} = i_2$	n_2 [rpm]	$T_{2\,max}$ [lb-in]	HP_{max} [hp]	η [%]	n_2 [rpm]	$T_{2\,max}$ [lb-in]	HP_{max} [hp]	η [%]	n_2 [rpm]	$T_{2\,max}$ [lb-in]	HP_{max} [hp]	η [%]	56C	140TC	180TC	210TC	250TC
SK 13063	65.20	11.86	33/6	13	1487	0.25	83	8.9	1487	0.17	83	4.6	1469	0.09	82	X*				
	79.54	14.46	33/6	11	1752	0.25	83	7.3	1752	0.17	83	3.8	1735	0.09	82	X*				
	97.03	7.87	37/3	9.0	1982	0.25	76	6.0	1982	0.17	76	3.1	1956	0.09	75	X*				
	114.04	9.25	37/3	7.7	2301	0.25	76	5.1	2274	0.17	75	2.6	2274	0.09	75	X*				
	128.53	10.42	37/3	6.8	2620	0.25	76	4.5	2584	0.17	75	2.3	2584	0.09	75	X*				
	146.17	11.86	37/3	6.0	2947	0.25	76	4.0	2912	0.17	75	2.1	2912	0.09	75	X*				
	178.31	14.46	37/3	4.9	3213	0.25	75	3.3	3354	0.17	75	1.7	3505	0.09	74	X*				
	198.86	9.25	43/2	4.4	3416	0.25	66	2.9	3434	0.17	65	1.5	3434	0.09	65	X*				
	224.12	10.42	43/2	3.9	3505	0.25	66	2.6	3637	0.17	65	1.3	3867	0.09	65	X*				
	254.89	11.86	43/2	3.4	3505	0.25	66	2.3	3620	0.17	65	1.2	3885	0.09	64	X*				
	310.92	14.46	43/2	2.8	3593	0.24	65	1.9	3744	0.17	65	0.96	3965	0.09	64	X*				
	349.37	16.25	43/2	2.5	3584	0.21	65	1.7	3761	0.16	65	0.86	3956	0.08	64	X*				
	395.51	18.40	43/2	2.2	3584	0.19	65	1.5	3761	0.13	65	0.76	3929	0.08	64	X*				
	471.70	9.25	51/1	1.9	3602	0.23	48	1.2	3752	0.15	47	0.64	4027	0.09	46	X*				
	531.64	10.42	51/1	1.6	3602	0.20	47	1.1	3735	0.15	46	0.56	4000	0.08	46	X*				
	604.62	11.86	51/1	1.4	3593	0.17	47	0.96	3717	0.12	46	0.50	3982	0.07	45	X*				
	737.53	14.46	51/1	1.2	3593	0.15	47	0.79	3744	0.11	46	0.41	3965	0.05	45	X*				
	938.20	18.40	51/1	0.93	3584	0.12	46	0.62	3761	0.08	46	0.32	3929	0.04	45	X*				
	1140.40✦	53.04	43/2	0.77	3522	0.07	64	0.51	3584	0.04	64	0.26	3788	0.03	64	X*				
	1343.63✦	62.49	43/2	0.65	3496	0.05	64	0.43	3602	0.04	64	0.22	4000	0.03	64	X*				
	2110.94✦	41.39	51/1	0.41	3575	0.05	45	0.27	3646	0.04	45	0.14	3947	0.01	45	X*				
	2374.16✦	46.55	51/1	0.37	3549	0.04	45	0.24	3611	0.03	45	0.13	3965	0.01	45	X*				
	2705.13✦	53.04	51/1	0.32	3522	0.04	45	0.21	3584	0.03	45	0.11	3982	0.01	45	X*				
	3631.55✦	71.21	51/1	0.24	3478	0.03	45	0.16	3664	0.03	45	0.08	4009	0.01	45	X*				

* Caution - The motor power may exceed the gear unit's mechanical torque capacity. Limits Based on 1750rpm input speed.
✦ Non-footed units only.
◈ The mechanical power limit of the solid input shaft type "W" may limit the reducer rating.
All ratings are mechanical. See page 14 for thermal considerations.

lb	W	56C
SK 13063	64	75

Send Quote Requests to info@automatedpt.com
Call +1(800)985-6929 To Order or Order Online At Nordgearmotors.com

SK 12080
NEMA-C + W
Ratings & Combinations

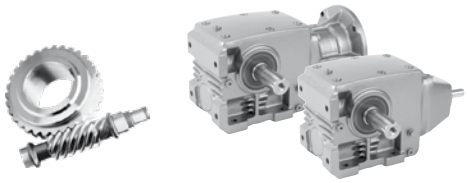

DRIVESYSTEMS

Model Type	Gear Ratio			n_2 = Output Speed $T_{2\,max}$ = Output Torque* HP_{max} = Input power ◈ η = Efficiencies								NEMA C-Face* Available Combinations				
				n_1 =1750 rpm				n_1 =1150 rpm								
	i_{tot}	i_1	$\frac{z_2}{z_1} = i_2$	n_2 [rpm]	$T_{2\,max}$ [lb-in]	HP_{max} [hp]	η [%]	n_2 [rpm]	$T_{2\,max}$ [lb-in]	HP_{max} [hp]	η [%]	56C	140TC	180TC	210TC	250TC
SK 12080	7.55	1.46	31/6	232	2611	5.00	91	153	2974	3.30	90	X	X	X		
	9.56	1.85	31/6	183	3009	5.00	91	121	3372	3.30	90	X	X	X		
	10.75	2.08	31/6	163	3009	5.00	91	107	3336	3.30	89	X	X	X		
	12.51	2.42	31/6	140	3053	5.00	90	92	3354	3.30	89	X	X	X		
	14.01	2.71	31/6	125	3230	5.00	90	82	3522	3.30	89	X	X	X		
	15.98	3.09	31/6	110	3496	5.00	90	72	3735	3.30	88	X	X	X		
	19.11	1.85	31/3	92	4027	5.00	87	60	4514	3.30	86	X	X	X		
	21.49	2.08	31/3	81	4160	5.00	87	54	4611	3.30	85	X	X	X		
	25.00	2.42	31/3	70	4336	5.00	86	46	4761	3.30	84	X	X	X		
	27.99	2.71	31/3	63	4514	5.00	86	41	4921	3.30	84	X	X	X		
	31.92	3.09	31/3	55	4646	4.77	85	36	5027	3.46	83	X	X	X*		
	37.91	3.67	31/3	46	4868	4.22	84	30	5213	3.03	82	X	X	X*		
	44.72	2.08	43/2	39	4868	3.77	80	26	5398	2.90	77	X	X	X*		
	52.03	2.42	43/2	34	5089	3.47	79	22	5584	2.56	76	X	X	X*		
	58.27	2.71	43/2	30	5310	3.24	78	20	5788	2.45	75	X	X	X*		
	66.44	3.09	43/2	26	5576	2.99	77	17	6027	2.17	75	X	X	X*		
	78.91	3.67	43/2	22	5797	2.67	76	15	6213	2.02	73	X	X	X*		
	94.35	1.85	51/1	19	4956	2.29	65	12	5549	1.70	62	X	X	X*		
	106.08	2.08	51/1	16	5222	2.06	64	11	5788	1.69	60	X	X	X*		
	123.42	2.42	51/1	14	5487	1.93	63	9.4	6018	1.51	59	X	X*	X*		
	138.21	2.71	51/1	13	5708	1.90	62	8.4	6222	1.43	58	X	X*	X*		
	157.59	3.09	51/1	11	5930	1.70	61	7.3	6416	1.30	57	X	X*	X*		
	187.17	3.67	51/1	9.3	5930	1.49	59	6.2	6354	1.14	55	X	X*	X*		
	234.60	4.60	51/1	7.5	6284	1.31	57	4.9	6629	0.95	54	X	X*			
	276.92✦	12.88	43/2	6.3	6284	0.91	69	4.2	6531	0.64	68	X*				
	402.90✦	7.90	51/1	4.3	6284	0.80	53	2.9	6638	0.62	50	X*	X*			
	520.20✦	10.20	51/1	3.4	6284	0.67	51	2.2	6549	0.47	49	X*	X*			
	656.88✦	12.88	51/1	2.7	6284	0.54	50	1.8	6531	0.39	48	X*				

W + NEMA

* Caution - The motor power may exceed the gear unit's mechanical torque capacity. Limits Based on 1750rpm input speed.
✦ Non-footed units only.
◈ The mechanical power limit of the solid input shaft type "W" may limit the reducer rating.
All ratings are mechanical. See page 14 for thermal considerations.

lb	W	56C	140TC	180TC
SK 12080	75	86	86	101

Send Quote Requests to info@automatedpt.com
Call +1(800)985-6929 To Order or Order Online At Nordgearmotors.com





SK 12080
NEMA-C + W
Ratings & Combinations

Model Type	Gear Ratio			n_2 = Output Speed $T_{2\,max}$ = Output Torque* HP_{max} = Input power ◈ η = Efficiencies												NEMA C-Face* Available Combinations				
				n_1 = 875 rpm				n_1 = 580 rpm				n_1 = 300 rpm								
	i_{tot}	i_1	$\frac{z_2}{z_1} = i_2$	n_2 [rpm]	$T_{2\,max}$ [lb-in]	HP_{max} [hp]	η [%]	n_2 [rpm]	$T_{2\,max}$ [lb-in]	HP_{max} [hp]	η [%]	n_2 [rpm]	$T_{2\,max}$ [lb-in]	HP_{max} [hp]	η [%]	56C	140TC	180TC	210TC	250TC
SK 12080	7.55	1.46	31/6	116	3195	2.50	90	77	3460	1.65	88	40	3452	0.90	86	X	X	X		
	9.56	1.85	31/6	92	3567	2.50	89	61	3602	1.65	88	31	3522	0.90	86	X	X	X		
	10.75	2.08	31/6	81	3522	2.50	89	54	3593	1.65	87	28	3513	0.90	85	X	X	X		
	12.51	2.42	31/6	70	3522	2.50	88	46	3637	1.65	87	24	3549	0.90	85	X	X	X		
	14.01	2.71	31/6	62	3673	2.50	88	41	3620	1.65	86	21	3575	0.90	85	X	X	X		
	15.98	3.09	31/6	55	3690	2.50	87	36	3655	1.65	86	19	3567	0.90	84	X	X	X		
	19.11	1.85	31/3	46	4779	2.50	84	30	5115	1.65	82	16	5593	0.90	80	X	X	X		
	21.49	2.08	31/3	41	4868	2.50	84	27	5168	1.65	82	14	5646	0.90	79	X	X	X		
	25.00	2.42	31/3	35	5000	2.50	83	23	5275	1.65	81	12	5735	0.90	79	X	X	X		
	27.99	2.71	31/3	31	5133	2.50	83	21	5434	1.65	81	11	5850	0.90	79	X	X	X		
	31.92	3.09	31/3	27	5213	2.72	82	18	5540	1.97	80	9.4	5912	1.13	78	X	X	X*		
	37.91	3.67	31/3	23	5398	2.43	81	15	5726	1.70	80	7.9	6106	0.98	78	X	X	X*		
	44.72	2.08	43/2	20	5699	2.41	75	13	6045	1.70	73	6.7	6611	1.02	69	X	X	X*		
	52.03	2.42	43/2	17	5868	2.13	74	11	6186	1.50	72	5.8	6726	0.90	69	X	X	X*		
	58.27	2.71	43/2	15	6045	1.94	74	10	6390	1.42	71	5.1	6876	0.82	68	X	X	X*		
	66.44	3.09	43/2	13	6257	1.77	73	8.7	6646	1.29	71	4.5	7089	0.75	68	X	X	X*		
	78.91	3.67	43/2	11	6434	1.55	72	7.4	6814	1.14	70	3.8	7266	0.66	67	X	X	X*		
	94.35	1.85	51/1	9.3	5876	1.47	59	6.1	6292	1.11	55	3.2	6885	0.68	51	X	X	X*		
	106.08	2.08	51/1	8.2	6115	1.37	58	5.5	6487	1.05	54	2.8	7089	0.63	50	X	X	X*		
	123.42	2.42	51/1	7.1	6328	1.27	56	4.7	6673	0.94	53	2.4	7257	0.56	49	X	X*	X*		
	138.21	2.71	51/1	6.3	6496	1.15	56	4.2	6868	0.88	52	2.2	7390	0.52	49	X	X*	X*		
	157.59	3.09	51/1	5.6	6655	1.10	54	3.7	7062	0.79	52	1.9	7540	0.47	48	X	X*	X*		
	187.17	3.67	51/1	4.7	6576	0.92	53	3.1	6974	0.67	51	1.6	7434	0.39	48	X	X*	X*		
	234.60	4.60	51/1	3.7	6930	0.78	52	2.5	7248	0.59	49	1.3	7717	0.34	47	X	X*			
	276.92✦	12.88	43/2	3.2	6567	0.50	67	2.1	6469	0.32	66	1.1	6372	0.17	65	X*				
	402.90✦	7.90	51/1	2.2	6797	0.48	49	1.4	7089	0.34	47	0.74	7567	0.19	46	X*	X*			
	520.20✦	10.20	51/1	1.7	6726	0.38	48	1.1	6983	0.25	47	0.58	7487	0.15	46	X*	X*			
	656.88✦	12.88	51/1	1.3	6708	0.29	47	0.88	6974	0.21	46	0.46	7434	0.12	45	X*				

W + NEMA

* Caution - The motor power may exceed the gear unit's mechanical torque capacity. Limits Based on 1750rpm input speed.
✦ Non-footed units only.
◈ The mechanical power limit of the solid input shaft type "W" may limit the reducer rating.
All ratings are mechanical. See page 14 for thermal considerations.

lb	W	56C	140TC	180TC
SK 12080	75	86	86	101

Send Quote Requests to info@automatedpt.com
Call +1(800)985-6929 To Order or Order Online At Nordgearmotors.com

SK 13080
NEMA-C + W
Ratings & Combinations

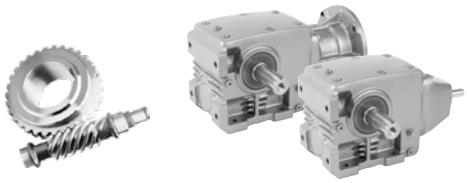

DRIVESYSTEMS

Model Type	Gear Ratio			n_2 = Output Speed $T_{2\,max}$ = Output Torque* HP_{max} = Input power ◈ η = Efficiencies								NEMA C-Face* Available Combinations				
				n_1 =1750 rpm				n_1 =1150 rpm								
	Total	Helical Gears	Worm Gears													
	i_{tot}	i_1	$\frac{z_2}{z_1} = i_2$	n_2 [rpm]	$T_{2\,max}$ [lb-in]	HP_{max} [hp]	η [%]	n_2 [rpm]	$T_{2\,max}$ [lb-in]	HP_{max} [hp]	η [%]	56C	140TC	180TC	210TC	250TC
SK 13080	**97.65**	9.45	31/3	18	2036	0.50	80	12	2044	0.33	79	X*				
	109.80	10.63	31/3	16	2301	0.50	80	11	2301	0.33	79	X*				
	127.74	12.37	31/3	14	2655	0.50	79	9.0	2646	0.33	78	X*				
	143.05	13.85	31/3	12	3009	0.50	79	8.1	3009	0.33	78	X*				
	163.11	15.79	31/3	11	3363	0.50	79	7.1	3381	0.33	78	X*				
	193.73	18.75	31/3	9.00	3982	0.50	78	6.0	3965	0.33	77	X*				
	228.52	10.63	43/2	7.70	5044	0.50	70	5.1	4974	0.33	68	X*				
	265.87	12.37	43/2	6.60	5044	0.50	69	4.3	5044	0.33	68	X*				
	297.73	13.85	43/2	5.90	5398	0.50	69	3.9	5319	0.33	67	X*				
	339.48	15.79	43/2	5.20	6195	0.50	68	3.4	6098	0.33	67	X*				
	403.20	18.75	43/2	4.30	6814	0.50	68	2.9	7098	0.33	67	X*				
	482.13	9.45	51/1	3.60	6814	0.50	52	2.4	6682	0.33	49	X*				
	542.07	10.63	51/1	3.20	6814	0.50	51	2.1	7053	0.33	49	X*				
	630.68	12.37	51/1	2.80	6814	0.50	50	1.8	7071	0.33	48	X*				
	706.25	13.85	51/1	2.50	6814	0.50	49	1.6	7089	0.33	48	X*				
	805.28	15.79	51/1	2.20	6814	0.48	49	1.4	7107	0.34	47	X*				
	956.44	18.75	51/1	1.80	6814	0.40	48	1.2	7098	0.28	47	X*				
	1198.81	23.51	51/1	1.50	6814	0.35	47	0.96	7045	0.23	46	X*				
	2058.82✦	40.37	51/1	0.85	6814	0.20	46	0.56	7115	0.13	46	X*				
	2658.22✦	52.12	51/1	0.66	6814	0.16	46	0.43	7045	0.11	45	X*				
	3356.66✦	65.82	51/1	0.52	6814	0.12	45	0.34	6992	0.08	45	X*				

W + NEMA

* Caution - The motor power may exceed the gear unit's mechanical torque capacity. Limits Based on 1750rpm input speed.
✦ Non-footed units only.
◈ The mechanical power limit of the solid input shaft type "W" may limit the reducer rating.
All ratings are mechanical. See page 14 for thermal considerations.

lb	W	56C
SK 13080	86	97

Send Quote Requests to info@automatedpt.com
Call +1(800)985-6929 To Order or Order Online At Nordgearmotors.com





SK 13080 NEMA-C + W Ratings & Combinations

Model Type	Gear Ratio			n_2 = Output Speed $T_{2\,max}$ = Output Torque* HP_{max} = Input power ◈ η = Efficiencies												NEMA C-Face* Available Combinations				
				n_1 = 875 rpm				n_1 = 580 rpm				n_1 = 300 rpm								
	i_{tot}	i_1	$\frac{z_2}{z_1} = i_2$	n_2	$T_{2\,max}$	HP_{max}	η	n_2	$T_{2\,max}$	HP_{max}	η	n_2	$T_{2\,max}$	HP_{max}	η					
				[rpm]	[lb-in]	[hp]	[%]	[rpm]	[lb-in]	[hp]	[%]	[rpm]	[lb-in]	[hp]	[%]	56C	140TC	180TC	210TC	250TC
SK 13080	**97.65**	9.45	31/3	9.0	2027	0.25	78	5.90	2000	0.17	77	3.1	1974	0.09	76	X*				
	109.80	10.63	31/3	8.0	2274	0.25	78	5.30	2248	0.17	77	2.7	2212	0.09	76	X*				
	127.74	12.37	31/3	6.8	2611	0.25	77	4.50	2611	0.17	77	2.3	2575	0.09	76	X*				
	143.05	13.85	31/3	6.1	2965	0.25	77	4.10	2965	0.17	77	2.1	2929	0.09	76	X*				
	163.11	15.79	31/3	5.4	3336	0.25	77	3.60	3292	0.17	76	1.8	3292	0.09	76	X*				
	193.73	18.75	31/3	4.5	3965	0.25	77	3.00	3912	0.17	76	1.5	3912	0.09	76	X*				
	228.52	10.63	43/2	3.8	4903	0.25	67	2.50	4823	0.17	66	1.3	4752	0.09	65	X*				
	265.87	12.37	43/2	3.3	4974	0.25	67	2.20	4903	0.17	66	1.1	4823	0.09	65	X*				
	297.73	13.85	43/2	2.9	5319	0.25	67	1.90	5239	0.17	66	1.0	5160	0.09	65	X*				
	339.48	15.79	43/2	2.6	6009	0.25	66	1.70	6009	0.17	66	0.88	5921	0.09	65	X*				
	403.20	18.75	43/2	2.2	7062	0.25	66	1.40	6956	0.17	65	0.74	6956	0.09	65	X*				
	482.13	9.45	51/1	1.8	6540	0.25	48	1.20	6407	0.17	47	0.62	6275	0.09	46	X*				
	542.07	10.63	51/1	1.6	6912	0.25	48	1.10	6761	0.17	47	0.55	6478	0.09	45	X*				
	630.68	12.37	51/1	1.4	7284	0.25	47	0.92	7549	0.17	46	0.48	7531	0.09	45	X*				
	706.25	13.85	51/1	1.2	7275	0.25	47	0.82	7584	0.17	46	0.42	8045	0.09	45	X*				
	805.28	15.79	51/1	1.1	7266	0.27	47	0.72	7620	0.19	46	0.37	8018	0.11	45	X*				
	956.44	18.75	51/1	0.91	7275	0.23	46	0.61	7620	0.16	46	0.31	7956	0.08	45	X*				
	1198.81	23.51	51/1	0.73	7301	0.19	46	0.48	7576	0.13	45	0.25	7832	0.07	45	X*				
	2058.82✦	40.37	51/1	0.43	7266	0.11	45	0.28	7416	0.07	45	0.15	7983	0.04	45	X*				
	2658.22✦	52.12	51/1	0.33	7151	0.08	45	0.22	7266	0.05	45	0.11	8062	0.03	44	X*				
	3356.66✦	65.82	51/1	0.26	7071	0.07	45	0.17	7354	0.04	45	0.09	8115	0.03	44	X*				

W + NEMA

* Caution - The motor power may exceed the gear unit's mechanical torque capacity. Limits Based on 1750rpm input speed.
✦ Non-footed units only.
◈ The mechanical power limit of the solid input shaft type "W" may limit the reducer rating.
All ratings are mechanical. See page 14 for thermal considerations.

lb	W	56C
SK 13080	86	97

Send Quote Requests to info@automatedpt.com
Call +1(800)985-6929 To Order or Order Online At Nordgearmotors.com

SK 32100
NEMA-C + W
Ratings & Combinations

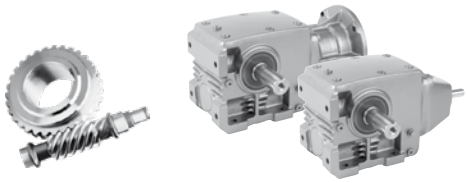

DRIVESYSTEMS

Model Type	Gear Ratio			n_2 = Output Speed $T_{2\,max}$ = Output Torque* HP_{max} = Input power ◈ η = Efficiencies								NEMA C-Face* Available Combinations				
				n_1 =1750 rpm				n_1 =1150 rpm								
	i_{tot}	i_1	$\frac{z_2}{z_1} = i_2$	n_2 [rpm]	$T_{2\,max}$ [lb-in]	HP_{max} [hp]	η [%]	n_2 [rpm]	$T_{2\,max}$ [lb-in]	HP_{max} [hp]	η [%]	56C	140TC	180TC	210TC	250TC
SK 32100	7.19	1.39	31/6	243	6018	10.00	93	161	6080	6.60	92	X	X	X	X	
	9.10	1.76	31/6	192	6416	10.00	92	127	6345	6.60	91	X	X	X	X	
	10.75	2.08	31/6	163	6416	10.00	92	107	6416	6.60	91	X	X	X	X	
	13.34	2.58	31/6	131	6284	10.00	91	87	6372	6.60	90	X	X	X	X	
	16.22	1.39	35/3	108	6638	10.00	90	71	7602	6.60	88	X	X	X	X	
	17.11	3.31	31/6	102	6284	10.00	91	68	6416	6.60	89	X	X	X	X	
	18.97	3.67	31/6	92	6372	10.00	90	61	6452	6.60	89	X	X	X	X	
	20.54	1.76	35/3	85	7434	10.00	89	56	8372	6.60	87	X	X	X	X	
	24.27	2.08	35/3	72	9027	10.00	88	48	10009	6.60	86	X	X	X	X	
	30.11	2.58	35/3	58	9292	9.83	87	38	10151	7.20	85	X	X	X	X*	
	34.32	1.76	39/2	51	9646	9.29	84	34	10859	7.14	82	X	X	X	X*	
	38.63	3.31	35/3	45	9735	8.08	86	30	10496	5.95	84	X	X	X	X*	
	42.83	3.67	35/3	41	9735	7.36	86	27	10425	5.31	84	X	X	X	X*	
	50.31	2.58	39/2	35	9824	6.65	82	23	10735	4.96	79	X	X	X	X*	
	64.55	3.31	39/2	27	10532	5.64	80	18	11355	4.21	77	X	X	X	X*	
	71.57	3.67	39/2	24	10797	5.13	80	16	11567	3.81	77	X	X	X	X*	
	94.19	4.83	39/2	19	11594	4.48	78	12	12240	3.11	75	X	X	X*		
	104.00	2.08	50/1	17	10354	4.05	69	11	11478	3.08	65	X	X	X*	X*	
	129.00	2.58	50/1	14	10974	3.63	67	9.0	11992	2.72	63	X	X	X*	X*	
	165.50	3.31	50/1	11	11770	3.20	64	7.0	12691	2.35	60	X	X	X*	X*	
	183.50	3.67	50/1	9.5	12080	2.90	63	6.3	12939	2.18	59	X	X	X*	X*	
	241.50	4.83	50/1	7.2	12567	2.39	60	4.8	13266	1.77	57	X	X	X*		
	304.00	6.08	50/1	5.8	12567	2.00	58	3.8	13337	1.46	55	X	X			
	410.00	8.20	50/1	4.3	11992	1.46	56	2.8	12629	1.07	52	X	X*	X*		
	510.00	10.20	50/1	3.4	12567	1.26	54	2.3	13089	0.94	51	X	X*			
	645.00	12.90	50/1	2.7	12567	1.03	52	1.8	13054	0.75	50	X	X*			

W + NEMA

* Caution - The motor power may exceed the gear unit's mechanical torque capacity. Limits Based on 1750rpm input speed.
◈ The mechanical power limit of the solid input shaft type "W" may limit the reducer rating.
All ratings are mechanical. See page 14 for thermal considerations.

lb	W	56C	140TC	180TC	210TC
SK 32100	146	150	150	159	179

Send Quote Requests to info@automatedpt.com
Call +1(800)985-6929 To Order or Order Online At Nordgearmotors.com





SK 32100 NEMA-C + W Ratings & Combinations

Model Type	Gear Ratio			n_2 = Output Speed $T_{2\,max}$ = Output Torque* HP_{max} = Input power ◈ η = Efficiencies												NEMA C-Face* Available Combinations				
				n_1 = 875 rpm				n_1 = 580 rpm				n_1 = 300 rpm								
	i_{tot}	i_1	$\frac{z_2}{z_1} = i_2$	n_2 [rpm]	$T_{2\,max}$ [lb-in]	HP_{max} [hp]	η [%]	n_2 [rpm]	$T_{2\,max}$ [lb-in]	HP_{max} [hp]	η [%]	n_2 [rpm]	$T_{2\,max}$ [lb-in]	HP_{max} [hp]	η [%]	56C	140TC	180TC	210TC	250TC
SK 32100	7.19	1.39	31/6	122	6018	5.00	91	81	5947	3.30	90	42	5814	1.80	88	X	X	X	X	
	9.10	1.76	31/6	96	6345	5.00	91	64	6204	3.30	89	33	6071	1.80	87	X	X	X	X	
	10.75	2.08	31/6	81	6345	5.00	90	54	6275	3.30	89	28	6062	1.80	86	X	X	X	X	
	13.34	2.58	31/6	66	6301	5.00	89	43	6230	3.30	88	22	6089	1.80	86	X	X	X	X	
	16.22	1.39	35/3	54	8177	5.00	87	36	8885	3.30	85	18	9762	1.80	82	X	X	X	X	
	17.11	3.31	31/6	51	6345	5.00	88	34	6266	3.30	87	18	6124	1.80	85	X	X	X	X	
	18.97	3.67	31/6	46	6381	5.00	88	31	6301	3.30	87	16	6160	1.80	85	X	X	X	X	
	20.54	1.76	35/3	43	8877	5.00	86	28	9531	3.30	84	15	10443	1.80	81	X	X	X	X	
	24.27	2.08	35/3	36	10567	5.00	85	24	11213	3.30	83	12	12248	1.80	80	X	X	X	X	
	30.11	2.58	35/3	29	10629	5.82	84	19	11231	4.13	82	10	12133	2.44	79	X	X	X	X*	
	34.32	1.76	39/2	25	11514	5.71	80	17	12372	4.33	77	8.7	13549	2.56	73	X	X	X	X*	
	38.63	3.31	35/3	23	10868	4.77	83	15	11549	3.39	81	7.8	12319	1.96	78	X	X	X	X*	
	42.83	3.67	35/3	20	10797	4.18	82	14	11452	3.18	80	7.0	12204	1.74	78	X	X	X	X*	
	50.31	2.58	39/2	17	11240	3.94	77	12	11877	3.06	74	6.0	12832	1.72	71	X	X	X	X*	
	64.55	3.31	39/2	14	11753	3.43	76	9.0	12487	2.44	73	4.6	13328	1.39	70	X	X	X	X*	
	71.57	3.67	39/2	12	11974	3.04	75	8.1	12700	2.27	72	4.2	13540	1.31	69	X	X	X	X*	
	94.19	4.83	39/2	9.3	12771	2.57	73	6.2	13328	1.85	71	3.2	14187	1.06	68	X	X	X*		
	104.00	2.08	50/1	8.4	12124	2.60	62	5.6	12868	1.97	58	2.9	14054	1.22	53	X	X	X*	X*	
	129.00	2.58	50/1	6.8	12558	2.25	60	4.5	13266	1.69	56	2.3	14337	1.03	51	X	X	X*	X*	
	165.50	3.31	50/1	5.3	13133	1.93	57	3.5	13956	1.43	54	1.8	14895	0.84	50	X	X	X*	X*	
	183.50	3.67	50/1	4.8	13399	1.82	56	3.2	14213	1.37	53	1.6	15151	0.79	49	X	X	X*	X*	
	241.50	4.83	50/1	3.6	13841	1.46	54	2.4	14452	1.07	51	1.2	15381	0.60	48	X	X	X*		
	304.00	6.08	50/1	2.9	13779	1.19	53	1.9	14293	0.86	50	0.99	15169	0.50	48	X	X			
	410.00	8.20	50/1	2.1	12930	0.84	51	1.4	13496	0.62	49	0.73	14426	0.36	47	X	X*	X*		
	510.00	10.20	50/1	1.7	13452	0.72	50	1.1	13956	0.51	48	0.59	14974	0.29	47	X	X*			
	645.00	12.90	50/1	1.4	13425	0.60	49	0.9	13939	0.43	47	0.47	14859	0.24	46	X	X*			

* Caution - The motor power may exceed the gear unit's mechanical torque capacity. Limits Based on 1750rpm input speed.
◈ The mechanical power limit of the solid input shaft type "W" may limit the reducer rating.
All ratings are mechanical. See page 14 for thermal considerations.

lb	W	56C	140TC	180TC	210TC
SK 32100	146	150	150	159	179

Send Quote Requests to info@automatedpt.com
Call +1(800)985-6929 To Order or Order Online At Nordgearmotors.com

SK 33100
NEMA-C + W
Ratings & Combinations

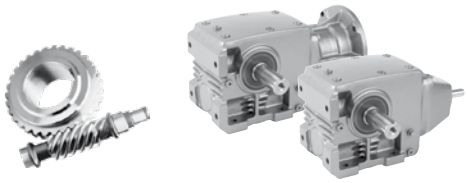

DRIVESYSTEMS

Model Type	Gear Ratio			n_2 = Output Speed $T_{2\,max}$ = Output Torque* HP_{max} = Input power ◈ η = Efficiencies								NEMA C-Face* Available Combinations				
				n_1 =1750 rpm				n_1 =1150 rpm								
	Total	Helical Gears	Worm Gears													
	i_{tot}	i_1	$\frac{z_2}{z_1} = i_2$	n_2 [rpm]	$T_{2\,max}$ [lb-in]	HP_{max} [hp]	η [%]	n_2 [rpm]	$T_{2\,max}$ [lb-in]	HP_{max} [hp]	η [%]	56C	140TC	180TC	210TC	250TC
SK 33100	53.70	10.39	31/6	33	6106	2.00	87	22	6230	1.32	86	X	X			
	69.85	5.99	35/3	25	9558	2.00	83	17	10142	1.32	81	X	X			
	85.21	7.30	35/3	21	9558	2.00	82	14	10142	1.32	80	X	X			
	109.32	9.37	35/3	16	10532	2.00	81	11	11018	1.32	79	X	X			
	121.21	10.39	35/3	14	10532	2.00	81	9.50	10965	1.32	79	X	X			
	142.38	7.30	39/2	12	11594	2.00	75	8.10	12302	1.32	72	X	X			
	182.66	9.37	39/2	9.6	12567	2.00	73	6.30	13142	1.32	71	X	X			
	257.63	13.21	39/2	6.8	13364	2.00	71	4.50	13894	1.32	70	X	X			
	299.28	5.99	50/1	5.8	13364	2.00	58	3.90	14178	1.32	55	X	X			
	365.07	7.30	50/1	4.8	13364	1.78	57	3.20	14178	1.35	53	X	X*			
	468.37	9.37	50/1	3.7	14072	1.53	54	2.50	14718	1.13	52	X	X*			
	519.31	10.39	50/1	3.4	14072	1.41	54	2.20	14647	1.01	51	X	X*			
	660.60	13.21	50/1	2.6	14072	1.11	52	1.70	14629	0.79	50	X	X*			
	1175.19	23.50	50/1	1.5	14072	0.68	49	0.98	14549	0.47	48	X*				
	1507.71	30.15	50/1	1.2	14072	0.56	48	0.77	14726	0.39	47	X*				
	1671.69	33.43	50/1	1.0	14072	0.47	48	0.69	14788	0.35	47	X*				
	2200.07	44.00	50/1	0.80	14072	0.38	47	0.52	14638	0.27	46	X*				
	3735.10	74.70	50/1	0.47	14072	0.23	46	0.31	14390	0.15	46	X*				
	4646.10	92.92	50/1	0.38	14072	0.19	46	0.25	14328	0.12	45	X*				
	5875.95	117.52	50/1	0.30	14072	0.15	46	0.20	14328	0.11	45	X*				

W + NEMA

* Caution - The motor power may exceed the gear unit's mechanical torque capacity. Limits Based on 1750rpm input speed.
◈ The mechanical power limit of the solid input shaft type "W" may limit the reducer rating.
All ratings are mechanical. See page 14 for thermal considerations.

lb	W	56C	140TC
SK 33100	150	161	161

Send Quote Requests to info@automatedpt.com
Call +1(800)985-6929 To Order or Order Online At Nordgearmotors.com





SK 33100 NEMA-C + W Ratings & Combinations

Model Type	Gear Ratio			n_2 = Output Speed $T_{2\,max}$ = Output Torque* HP_{max} = Input power ◈ η = Efficiencies												NEMA C-Face* Available Combinations				
	Total	Helical Gears	Worm Gears	n_1 = 875 rpm				n_1 = 580 rpm				n_1 = 300 rpm								
	i_{tot}	i_1	$\frac{z_2}{z_1} = i_2$	n_2 [rpm]	$T_{2\,max}$ [lb-in]	HP_{max} [hp]	η [%]	n_2 [rpm]	$T_{2\,max}$ [lb-in]	HP_{max} [hp]	η [%]	n_2 [rpm]	$T_{2\,max}$ [lb-in]	HP_{max} [hp]	η [%]	56C	140TC	180TC	210TC	250TC
SK 33100	53.70	10.39	31/6	16	6160	1.00	85	11	6089	0.66	84	5.6	6018	0.36	83	X	X			
	69.85	5.99	35/3	13	10487	1.00	80	8.3	10868	0.66	79	4.3	11540	0.36	77	X	X			
	85.21	7.30	35/3	10	10416	1.00	79	6.8	10841	0.66	78	3.5	11567	0.36	76	X	X			
	109.32	9.37	35/3	8.0	11284	1.00	78	5.3	11753	0.66	77	2.7	12363	0.36	76	X	X			
	121.21	10.39	35/3	7.2	11275	1.00	78	4.8	11691	0.66	77	2.5	12434	0.36	76	X	X			
	142.38	7.30	39/2	6.1	12638	1.00	71	4.1	13151	0.66	69	2.1	14027	0.36	67	X	X			
	182.66	9.37	39/2	4.8	13470	1.00	70	3.2	14027	0.66	68	1.6	15027	0.36	67	X	X			
	257.63	13.21	39/2	3.4	14275	1.00	69	2.3	14841	0.66	68	1.2	15788	0.36	66	X	X			
	299.28	5.99	50/1	2.9	14664	1.00	53	1.9	15195	0.66	50	1.0	16125	0.36	48	X	X			
	365.07	7.30	50/1	2.4	14567	1.09	51	1.6	15160	0.79	49	0.82	16169	0.44	47	X	X*			
	468.37	9.37	50/1	1.9	15080	0.91	50	1.2	15700	0.62	48	0.64	16824	0.36	47	X	X*			
	519.31	10.39	50/1	1.7	15063	0.82	50	1.1	15620	0.56	48	0.58	16753	0.34	46	X	X*			
	660.60	13.21	50/1	1.3	15027	0.63	49	0.88	15629	0.47	47	0.45	16629	0.25	46	X	X*			
	1175.19	23.50	50/1	0.74	15080	0.38	47	0.49	15647	0.27	46	0.26	16178	0.15	45	X*				
	1507.71	30.15	50/1	0.58	15134	0.31	46	0.38	15567	0.20	46	0.20	15992	0.11	45	X*				
	1671.69	33.43	50/1	0.52	15151	0.27	46	0.35	15541	0.19	46	0.18	16266	0.11	45	X*				
	2200.07	44.00	50/1	0.40	14912	0.20	46	0.26	15195	0.13	46	0.14	16550	0.08	45	X*				
	3735.10	74.70	50/1	0.23	14541	0.12	45	0.16	15426	0.08	45	0.08	16797	0.05	45	X*				
	4646.10	92.92	50/1	0.19	14629	0.09	45	0.12	15780	0.07	45	0.06	16859	0.04	45	X*				
	5875.95	117.52	50/1	0.15	15178	0.08	45	0.10	16072	0.05	45	0.05	16921	0.03	45	X*				

W + NEMA

* Caution - The motor power may exceed the gear unit's mechanical torque capacity. Limits Based on 1750rpm input speed.
◈ The mechanical power limit of the solid input shaft type "W" may limit the reducer rating.
All ratings are mechanical. See page 14 for thermal considerations.

lb	W	56C	140TC
SK 33100	150	161	161

Send Quote Requests to info@automatedpt.com
Call +1(800)985-6929 To Order or Order Online At Nordgearmotors.com

SK 42125
NEMA-C + W
Ratings & Combinations





DRIVESYSTEMS

Model Type	Gear Ratio			n_2 = Output Speed $T_{2\,max}$ = Output Torque* HP_{max} = Input power ◈ η = Efficiencies								NEMA C-Face* Available Combinations				
				n_1 =1750 rpm				n_1 =1150 rpm								
	Total	Helical Gears	Worm Gears	n_2	$T_{2\,max}$	HP_{max}	η	n_2	$T_{2\,max}$	HP_{max}	η					
	i_{tot}	i_1	$\frac{z_2}{z_1} = i_2$	[rpm]	[lb-in]	[hp]	[%]	[rpm]	[lb-in]	[hp]	[%]	56C	140TC	180TC	210TC	250TC
SK 42125	7.29	1.41	31/6	240	8319	20.00	94	158	9514	13.20	93			X	X	X
	7.76	1.50	31/6	226	8938	20.00	94	149	10151	13.20	93			X	X	X
	8.43	1.63	31/6	208	10089	20.00	94	137	11036	13.20	93			X	X	X
	9.41	1.82	31/6	186	10089	20.00	93	123	11319	13.20	93	X	X	X	X	X
	11.06	2.14	31/6	158	10974	20.00	93	104	11478	13.20	92	X	X	X	X	X
	12.93	2.50	31/6	135	10974	20.00	93	89	11753	13.20	92	X	X	X	X	X
	14.57	1.41	31/3	120	11859	20.00	91	79	13558	13.20	90			X	X	X
	15.92	3.08	31/6	110	10974	20.00	92	73	11629	13.20	91	X	X	X	X	X
	18.80	1.82	31/3	93	13364	20.00	91	61	15001	13.20	90	X	X	X	X	X
	22.11	2.14	31/3	79	14248	19.84	90	52	15762	14.61	89	X	X	X	X	X*
	25.83	2.50	31/3	68	15134	18.14	90	45	16567	13.43	88	X	X	X	X	X*
	31.82	3.08	31/3	55	16284	15.97	89	36	17612	11.55	87	X	X	X	X	X*
	35.33	3.42	31/3	50	14160	12.61	89	33	15249	9.17	87	X	X	X	X	
	40.95	1.82	45/2	43	16284	12.91	86	28	18275	9.66	84	X	X	X	X	X*
	48.15	2.14	45/2	36	17346	11.65	85	24	19196	8.91	82	X	X	X	X	X*
	56.25	2.50	45/2	31	18231	10.67	84	21	19957	8.20	81	X	X	X	X	X*
	69.30	3.08	45/2	25	19647	9.38	83	17	21258	7.16	80	X	X	X	X*	X*
	76.95	3.42	45/2	23	20266	9.02	82	15	21815	6.57	79	X	X	X	X*	
	87.30	3.88	45/2	20	20886	8.18	81	13	22275	5.88	78	X	X	X	X*	
	100.58	2.14	47/1	17	18850	6.86	74	11	20859	5.20	70	X	X	X	X*	X*
	117.50	2.50	47/1	15	19824	6.46	73	9.8	21700	4.96	68	X	X	X	X*	X*
	144.76	3.08	47/1	12	21152	5.67	71	8.0	22877	4.40	66	X	X	X	X*	X*
	160.74	3.42	47/1	11	21860	5.44	70	7.2	23532	4.13	65	X	X	X	X*	
	182.36	3.88	47/1	9.6	22656	5.07	68	6.3	24169	3.78	64	X	X	X	X*	
	201.63	4.29	47/1	8.7	23276	4.80	67	5.7	24656	3.54	63	X	X	X*	X*	
	247.69	5.27	47/1	7.1	24426	4.24	65	4.7	25842	3.22	60			X*	X*	
	337.46	7.18	47/1	5.2	25222	3.35	62	3.4	26798	2.49	58			X*	X*	
	495.85	10.55	47/1	3.5	25222	2.41	58	2.3	26231	1.74	55	X	X	X*		
	695.60	14.80	47/1	2.5	25222	1.82	55	1.7	26276	1.34	53	X	X*			

* Caution - The motor power may exceed the gear unit's mechanical torque capacity. Limits Based on 1750rpm input speed.
◈ The mechanical power limit of the solid input shaft type "W" may limit the reducer rating.
All ratings are mechanical. See page 14 for thermal considerations.

lb	W	56C	140TC	180TC	210TC	250TC
SK 42125	256	245	245	260	291	313

Send Quote Requests to info@automatedpt.com
Call +1(800)985-6929 To Order or Order Online At Nordgearmotors.com





SK 42125 NEMA-C + W Ratings & Combinations

Model Type	Gear Ratio			n_2 = Output Speed $T_{2\,max}$ = Output Torque* HP_{max} = Input power ◈ η = Efficiencies												NEMA C-Face* Available Combinations				
				n_1 = 875 rpm				n_1 = 580 rpm				n_1 = 300 rpm								
	i_{tot}	i_1	$\frac{z_2}{z_1} = i_2$	n_2 [rpm]	$T_{2\,max}$ [lb-in]	HP_{max} [hp]	η [%]	n_2 [rpm]	$T_{2\,max}$ [lb-in]	HP_{max} [hp]	η [%]	n_2 [rpm]	$T_{2\,max}$ [lb-in]	HP_{max} [hp]	η [%]	56C	140TC	180TC	210TC	250TC
SK 42125	7.29	1.41	31/6	120	10222	10.00	93	80	10523	6.60	91	41	10293	3.60	89			X	X	X
	7.76	1.50	31/6	113	10886	10.00	92	75	10797	6.60	91	39	10558	3.60	89			X	X	X
	8.43	1.63	31/6	104	10921	10.00	92	69	10797	6.60	91	36	10558	3.60	89			X	X	X
	9.41	1.82	31/6	93	11195	10.00	92	62	11071	6.60	91	32	10708	3.60	88	X	X	X	X	X
	11.06	2.14	31/6	79	11355	10.00	91	52	11231	6.60	90	27	10974	3.60	88	X	X	X	X	X
	12.93	2.50	31/6	68	11629	10.00	91	45	11372	6.60	89	23	11116	3.60	87	X	X	X	X	X
	14.57	1.41	31/3	60	14567	10.00	89	40	15824	6.60	88	21	15939	3.60	84			X	X	X
	15.92	3.08	31/6	55	11505	10.00	90	36	11372	6.60	89	19	10992	3.60	86	X	X	X	X	X
	18.80	1.82	31/3	47	15886	10.00	88	31	16983	6.60	86	16	16390	3.60	83	X	X	X	X	X
	22.11	2.14	31/3	40	16638	12.00	88	26	17373	8.32	86	14	16567	4.49	82	X	X	X	X	X*
	25.83	2.50	31/3	34	17381	10.78	87	22	17452	7.16	85	12	16842	3.91	82	X	X	X	X	X*
	31.82	3.08	31/3	27	17974	8.95	86	18	17558	5.97	84	9.4	16930	3.11	81	X	X	X	X	X*
	35.33	3.42	31/3	25	15762	7.36	85	16	16762	5.12	83	8.5	17063	2.84	81	X	X	X	X	
	40.95	1.82	45/2	21	19355	7.86	82	14	20736	5.83	79	7.3	22700	3.55	74	X	X	X	X	X*
	48.15	2.14	45/2	18	20258	7.14	81	12	21452	5.31	77	6.2	23426	3.15	73	X	X	X	X	X*
	56.25	2.50	45/2	16	20939	6.73	79	10	22107	4.61	76	5.3	23948	2.80	72	X	X	X	X	X*
	69.30	3.08	45/2	13	22063	5.83	78	8.4	23417	4.16	75	4.3	24992	2.40	71	X	X	X	X*	X*
	76.95	3.42	45/2	11	22559	5.11	77	7.5	23984	3.86	74	3.9	25585	2.27	70	X	X	X	X*	
	87.30	3.88	45/2	10	23134	4.83	76	6.6	24435	3.50	73	3.4	26046	2.01	70	X	X	X	X*	
	100.58	2.14	47/1	8.7	22010	4.53	67	5.8	23311	3.40	63	3.0	25453	2.16	56	X	X	X	X*	X*
	117.50	2.50	47/1	7.4	22762	4.12	65	4.9	24037	3.06	61	2.6	26046	1.96	55	X	X	X	X*	X*
	144.76	3.08	47/1	6.0	23753	3.59	63	4.0	25205	2.71	59	2.1	26904	1.66	54	X	X	X	X*	X*
	160.74	3.42	47/1	5.4	24329	3.36	62	3.6	25869	2.55	58	1.9	27594	1.57	53	X	X	X	X*	
	182.36	3.88	47/1	4.8	25090	3.14	61	3.2	26506	2.36	57	1.6	28249	1.38	52	X	X	X	X*	
	201.63	4.29	47/1	4.3	25709	2.92	60	2.9	27001	2.21	56	1.5	28754	1.31	52	X	X	X*	X*	
	247.69	5.27	47/1	3.5	26860	2.57	58	2.3	27922	1.85	55	1.2	29709	1.11	51			X*	X*	
	337.46	7.18	47/1	2.6	27532	2.06	55	1.7	28656	1.46	53	0.89	30550	0.86	50			X*	X*	
	495.85	10.55	47/1	1.8	26992	1.45	53	1.2	27966	1.05	51	0.61	30019	0.59	49	X	X	X*		
	695.60	14.80	47/1	1.3	26913	1.09	51	0.83	27700	0.72	50	0.43	26594	0.38	48	X	X*			

W + NEMA

* Caution - The motor power may exceed the gear unit's mechanical torque capacity. Limits Based on 1750rpm input speed.
◈ The mechanical power limit of the solid input shaft type "W" may limit the reducer rating.
All ratings are mechanical. See page 14 for thermal considerations.

	W	56C	140TC	180TC	210TC	250TC
SK 42125	256	245	245	260	291	313

Send Quote Requests to info@automatedpt.com
Call +1(800)985-6929 To Order or Order Online At Nordgearmotors.com

SK 43125
NEMA-C + W
Ratings & Combinations





DRIVESYSTEMS

Model Type	Gear Ratio			n_2 = Output Speed $T_{2\,max}$ = Output Torque* HP_{max} = Input power ◈ η = Efficiencies								NEMA C-Face* Available Combinations				
				n_1 =1750 rpm				n_1 =1150 rpm								
	Total	Helical Gears	Worm Gears	n_2	$T_{2\,max}$	HP_{max}	η	n_2	$T_{2\,max}$	HP_{max}	η					
	i_{tot}	i_1	$\frac{z_2}{z_1} = i_2$	[rpm]	[lb-in]	[hp]	[%]	[rpm]	[lb-in]	[hp]	[%]	56C	140TC	180TC	210TC	250TC
SK 43125	62.50	6.05	31/3	28	13894	5.00	86	18	14744	3.30	84	X	X	X	X	
	69.99	6.78	31/3	25	13806	5.00	85	17	14682	3.30	83	X	X	X		
	86.22	8.35	31/3	20	15576	5.00	84	13	16390	3.30	82	X	X	X		
	110.97	4.93	45/2	16	20974	5.00	79	10	22152	3.30	76	X	X	X		
	130.49	5.80	45/2	13	21948	5.00	78	8.9	23276	3.30	75	X	X	X		
	152.44	6.78	45/2	11	22922	5.00	77	7.6	24382	3.30	74	X	X	X		
	187.80	8.35	45/2	9.3	22922	4.45	76	6.2	24116	3.24	73	X	X	X*		
	236.58	10.51	45/2	7.4	24868	3.94	74	4.9	25869	2.79	72	X	X	X*		
	269.76	11.99	45/2	6.5	24868	3.51	73	4.3	25789	2.48	71	X	X	X*		
	323.51	14.38	45/2	5.4	21240	2.52	72	3.6	20939	1.70	70	X	X			
	380.39	16.91	45/2	4.6	23098	2.37	71	3.0	23231	1.61	69	X	X			
	444.38	19.75	45/2	3.9	26462	2.33	70	2.6	27134	1.62	69	X	X			
	547.47	24.33	45/2	3.2	27346	1.98	70	2.1	28329	1.39	68	X	X*			
	607.91	27.02	45/2	2.9	23630	1.58	69	1.90	24612	1.09	68	X	X*			
	689.67	30.65	45/2	2.5	25046	1.43	69	1.70	26231	1.06	67	X	X*			
	794.58	16.91	47/1	2.2	27346	1.77	54	1.50	28559	1.30	52	X	X*			
	928.25	19.75	47/1	1.9	27346	1.55	53	1.20	28417	1.06	51	X	X*			
	1198.50	25.50	47/1	1.5	27346	1.25	52	0.96	28400	0.87	50	X	X*			
	1476.55	31.42	47/1	1.2	27346	1.02	51	0.78	28665	0.72	49	X	X*			
	1639.55	34.88	47/1	1.1	27346	0.94	51	0.70	28780	0.66	49	X*	X*			
	1860.07	39.58	47/1	0.94	27346	0.82	50	0.62	28594	0.58	49	X*	X*			
	2056.63	43.76	47/1	0.85	27346	0.74	50	0.56	28462	0.51	49	X*	X*			
	2526.44	53.75	47/1	0.69	27346	0.62	49	0.46	28232	0.43	48	X*	X*			
	3442.09	73.24	47/1	0.51	27346	0.46	48	0.34	27984	0.31	48	X*	X*			
	5057.67	107.61	47/1	0.35	27346	0.32	48	0.23	27771	0.21	47	X*	X*			
	7095.12	150.96	47/1	0.25	26550	0.23	47	0.16	26550	0.15	47	X*	X*			

W + NEMA

* Caution - The motor power may exceed the gear unit's mechanical torque capacity. Limits Based on 1750rpm input speed.
◈ The mechanical power limit of the solid input shaft type "W" may limit the reducer rating.
All ratings are mechanical. See page 14 for thermal considerations.

lb	W	56C	140TC	180TC	210TC
SK 43125	271	276	276	284	315

Send Quote Requests to info@automatedpt.com
Call +1(800)985-6929 To Order or Order Online At Nordgearmotors.com




SK 43125 NEMA-C + W Ratings & Combinations

Model Type	Gear Ratio			n_2 = Output Speed $T_{2\,max}$ = Output Torque* HP_{max} = Input power ◈ η = Efficiencies												NEMA C-Face* Available Combinations				
				n_1 = 875 rpm				n_1 = 580 rpm				n_1 = 300 rpm								
	i_{tot}	i_1	$\frac{z_2}{z_1} = i_2$	n_2 [rpm]	$T_{2\,max}$ [lb-in]	HP_{max} [hp]	η [%]	n_2 [rpm]	$T_{2\,max}$ [lb-in]	HP_{max} [hp]	η [%]	n_2 [rpm]	$T_{2\,max}$ [lb-in]	HP_{max} [hp]	η [%]	56C	140TC	180TC	210TC	250TC
SK 43125	62.50	6.05	31/3	14	15240	2.50	83	9.3	15797	1.65	81	4.8	16222	0.90	79	X	X	X	X	
	69.99	6.78	31/3	13	15116	2.50	82	8.3	15718	1.65	80	4.3	16018	0.90	78	X	X	X		
	86.22	8.35	31/3	10	16771	2.50	81	6.7	16726	1.65	80	3.5	16302	0.90	78	X	X	X		
	110.97	4.93	45/2	7.9	23090	2.50	74	5.2	24081	1.65	72	2.7	25630	0.90	69	X	X	X		
	130.49	5.80	45/2	6.7	24090	2.50	73	4.4	24948	1.65	71	2.3	26541	0.90	68	X	X	X		
	152.44	6.78	45/2	5.7	25099	2.50	72	3.8	26090	1.65	70	2.0	27771	0.90	68	X	X	X		
	187.80	8.35	45/2	4.7	24683	2.59	71	3.1	25762	1.84	69	1.6	27541	1.05	67	X	X	X*		
	236.58	10.51	45/2	3.7	26621	2.23	70	2.5	27577	1.58	69	1.3	29603	0.91	67	X	X	X*		
	269.76	11.99	45/2	3.2	26585	1.93	70	2.2	27497	1.41	68	1.1	29470	0.76	67	X	X	X*		
	323.51	14.38	45/2	2.7	20638	1.29	69	1.8	20337	0.86	68	0.93	19744	0.44	66	X	X			
	380.39	16.91	45/2	2.3	22895	1.23	68	1.5	22559	0.80	67	0.79	22222	0.42	66	X	X			
	444.38	19.75	45/2	2.0	26745	1.25	68	1.3	26346	0.80	67	0.68	25957	0.43	66	X	X			
	547.47	24.33	45/2	1.6	29329	1.11	67	1.1	30055	0.79	66	0.55	30055	0.40	66	X	X*			
	607.91	27.02	45/2	1.4	25382	0.84	67	0.95	26187	0.60	66	0.49	26966	0.32	66	X	X*			
	689.67	30.65	45/2	1.3	26939	0.83	67	0.84	27692	0.56	66	0.43	28541	0.29	65	X	X*			
	794.58	16.91	47/1	1.1	29152	0.99	51	0.73	30630	0.72	49	0.38	32126	0.40	48	X	X*			
	928.25	19.75	47/1	0.94	29223	0.87	50	0.62	30550	0.62	49	0.32	31807	0.34	48	X	X*			
	1198.50	25.50	47/1	0.73	29347	0.70	49	0.48	30347	0.48	48	0.25	29913	0.25	47	X	X*			
	1476.55	31.42	47/1	0.59	29426	0.56	49	0.39	30223	0.39	48	0.20	31294	0.21	47	X	X*			
	1639.55	34.88	47/1	0.53	29462	0.51	49	0.35	30170	0.35	48	0.18	31807	0.19	47	X*	X*			
	1860.07	39.58	47/1	0.47	29178	0.46	48	0.31	29798	0.31	48	0.16	32010	0.17	47	X*	X*			
	2056.63	43.76	47/1	0.43	28984	0.42	48	0.28	29541	0.27	48	0.15	32143	0.16	47	X*	X*			
	2526.44	53.75	47/1	0.35	28647	0.34	48	0.23	29090	0.23	47	0.12	32373	0.13	47	X*	X*			
	3442.09	73.24	47/1	0.25	28285	0.24	47	0.17	29913	0.17	47	0.09	32630	0.09	47	X*	X*			
	5057.67	107.61	47/1	0.17	29125	0.16	47	0.11	31037	0.12	47	0.06	32842	0.07	47	X*	X*			
	7095.12	150.96	47/1	0.12	26550	0.11	47	0.08	26550	0.07	47	0.04	26550	0.04	47	X*	X*			

* Caution - The motor power may exceed the gear unit's mechanical torque capacity. Limits Based on 1750rpm input speed.
◈ The mechanical power limit of the solid input shaft type "W" may limit the reducer rating.
All ratings are mechanical. See page 14 for thermal considerations.

lb	W	56C	140TC	180TC	210TC
SK 43125	271	276	276	284	315

Send Quote Requests to info@automatedpt.com
Call +1(800)985-6929 To Order or Order Online At Nordgearmotors.com

Send Quote Requests to info@automatedpt.com
Call +1(800)985-6929 To Order or Order Online At Nordgearmotors.com

Notes

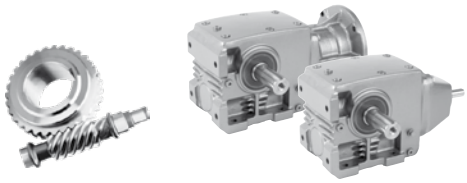

DRIVESYSTEMS

NOTES

Send Quote Requests to info@automatedpt.com
Call +1(800)985-6929 To Order or Order Online At Nordgearmotors.com

Send Quote Requests to info@automatedpt.com
Call +1(800)985-6929 To Order or Order Online At Nordgearmotors.com

Right-angle Helical-worm Dimensions

Dimensions

- Gearmotors
- Reducers C-Face
- Options
- Shafts

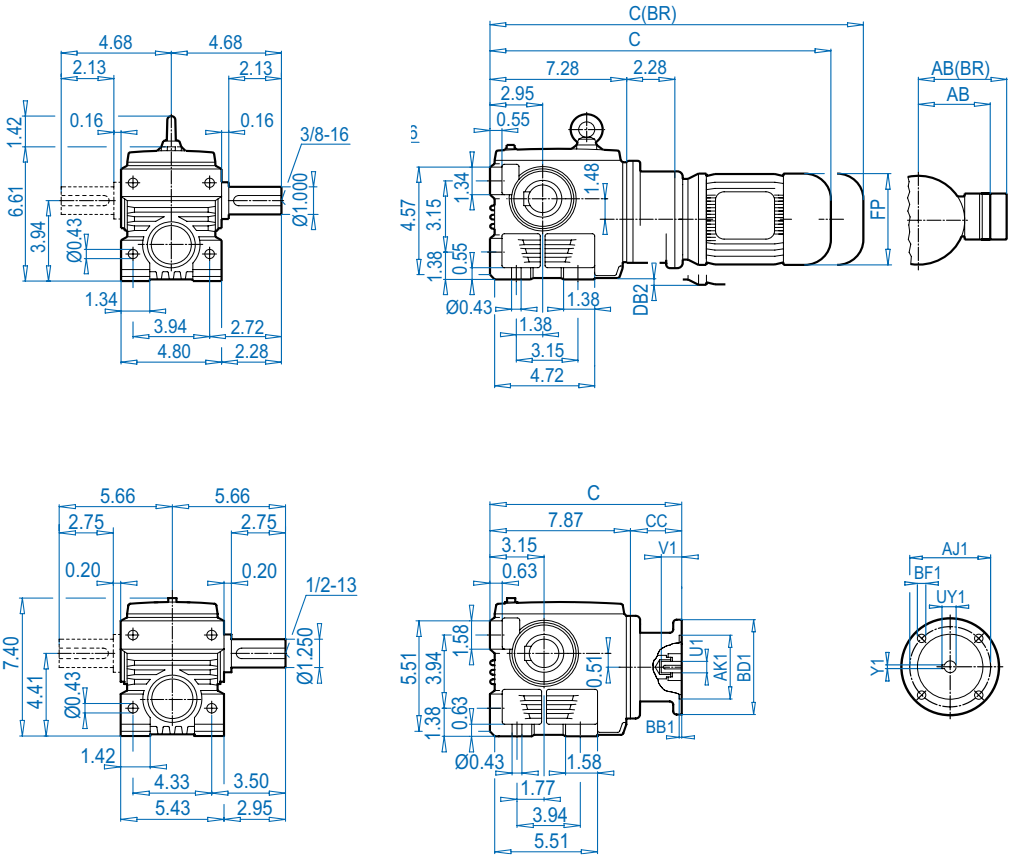

DRIVESYSTEMS

www.nord.com

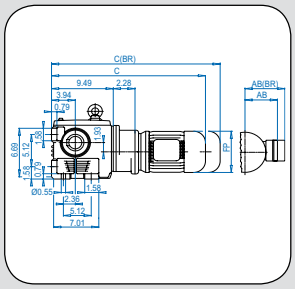

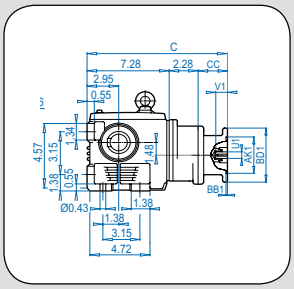

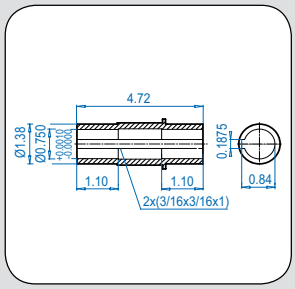

Send Quote Requests to info@automatedpt.com
Call +1(800)985-6929 To Order or Order Online At Nordgearmotors.com

SK 02040 + Motor



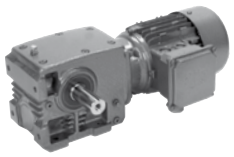

SK 02040

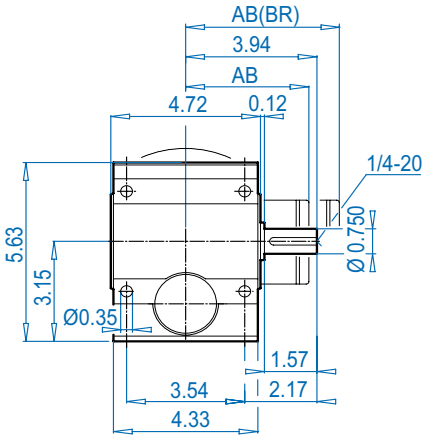

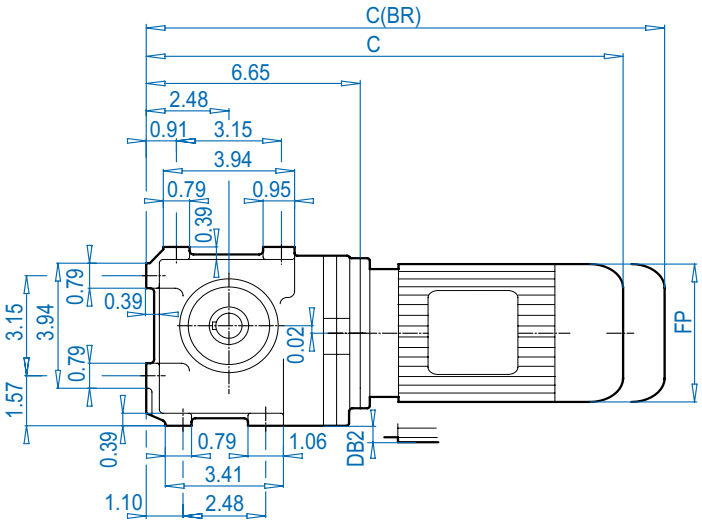

SK 02040VF

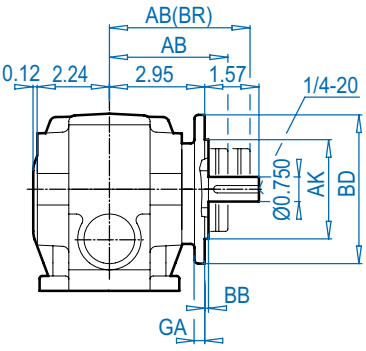

SK 02040AF

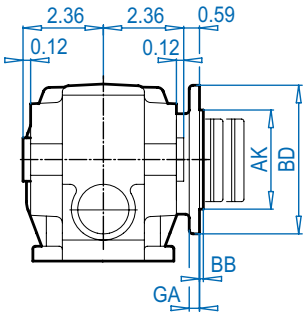

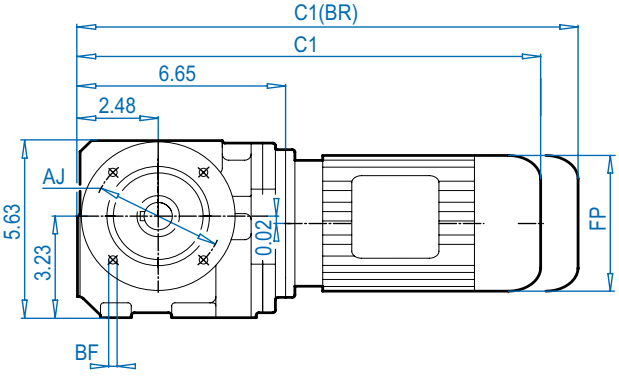

SK 02040V

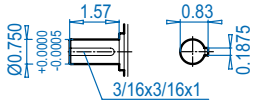

SK 02040AF

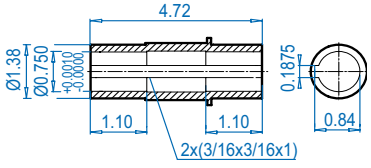

SK 02040AFB ⇨📖 672

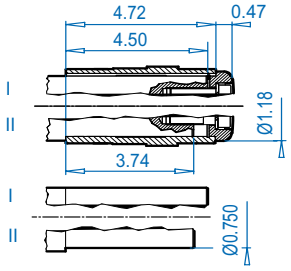

Mounting flange

BD (mm)	AJ	AK		BB	BF	GA
4.72 (120)	3.94	3.150	+ 0.0005 - 0.0004	0.12	0.26	0.32
6.30 (160)	5.12	4.331	+ 0.0005 - 0.0004	0.14	0.35	0.39

Motor dimensions

Standard efficiency	63S/L	71S/L	80S/L	90S/L			For Other Connection Possibilities please see ⇨📖 666 & 667
Energy efficiency			80LH	90SH			
AB	4.53	4.88	5.59	5.79			
AB (BR)	4.84	5.24	5.63	5.83			
C1	14.21	15.08	15.94	17.52			
C1 (BR)	16.42	17.36	18.46	20.47			
C	14.21	15.08	15.94	17.52			
C (BR)	16.42	17.36	18.46	20.47			
FP	5.12	5.71	6.50	7.20			
DB2	-	-	0.12	0.47			



(BR) denotes Brakemotor

Send Quote Requests to info@automatedpt.com
Call +1(800)985-6929 To Order or Order Online At Nordgearmotors.com

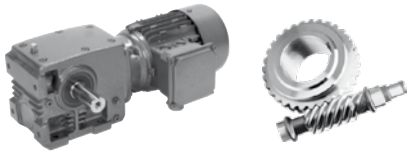

SK 02040 + Motor

SK 02040AZ

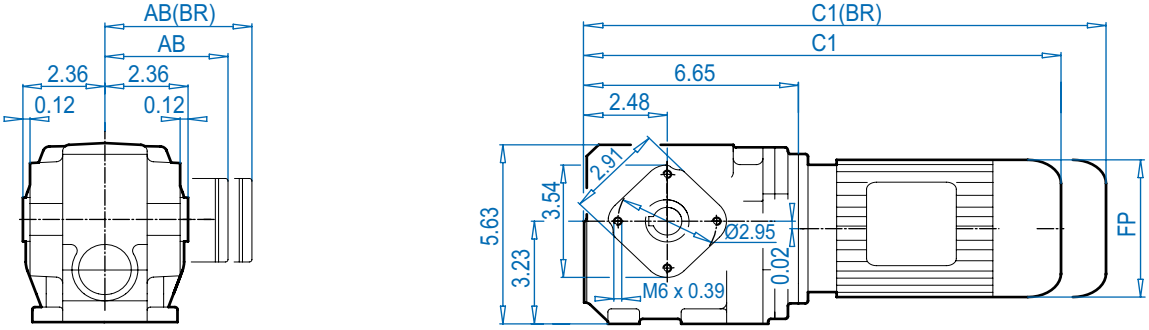

SK 02040AZ**D**

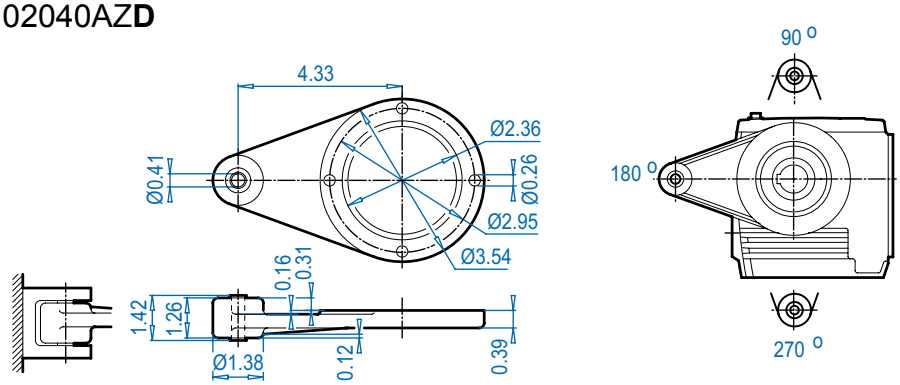

SK 02040AZ

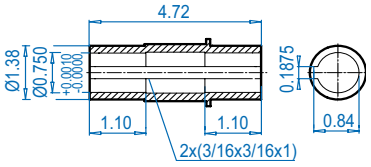

SK 02040AZ**B** ⇨🕮 672

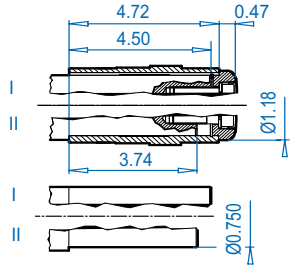

Motor dimensions

Standard efficiency	63S/L	71S/L	80S/L	90S/L			For Other Connection Possibilities please see ⇨🕮 666 & 667
Energy efficiency			80LH	90SH			
AB	4.53	4.88	5.59	5.79			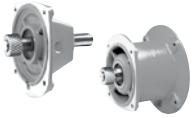
AB(BR)	4.84	5.24	5.63	5.83			
C1	14.21	15.08	15.94	17.52			
C1(BR)	16.42	17.36	18.46	20.47			
FP	5.12	5.71	6.50	7.20			

(BR) denotes Brakemotor

Dimensions in Inches
DIMENSIONS
ALTERNATE SHAFTS SEE PAGES 669 - 671

Send Quote Requests to info@automatedpt.com
Call +1(800)985-6929 To Order or Order Online At Nordgearmotors.com

SK 02040 + NEMA





SK 02040

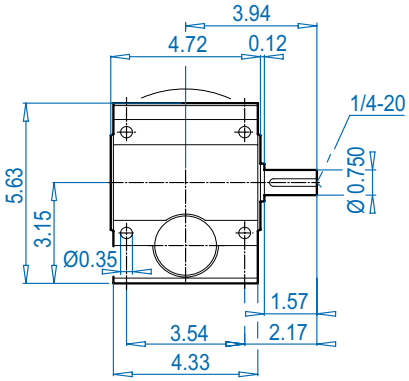

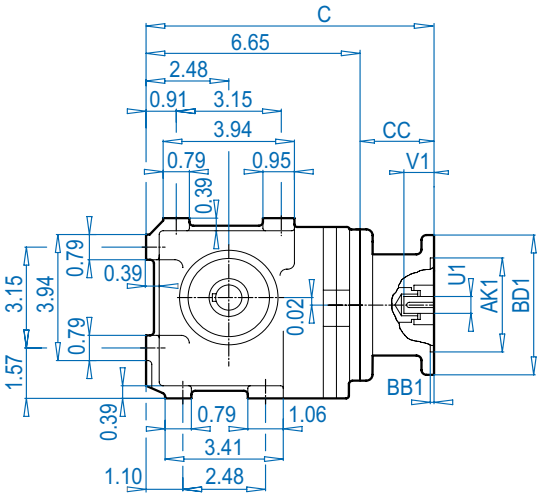

NEMA Input

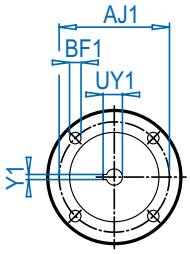

DIMENSIONS

Dimensions in Inches

SK 02040VF

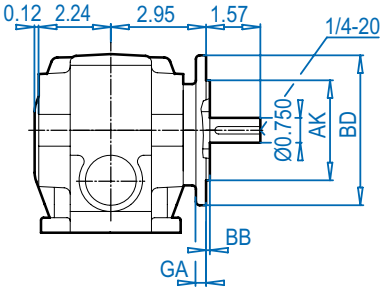

SK 02040AF

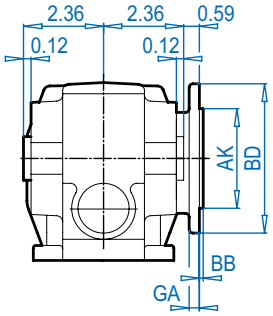

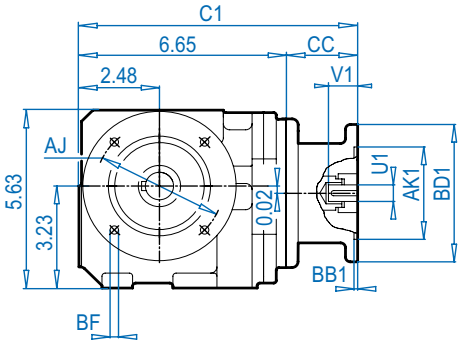

ALTERNATE SHAFTS SEE PAGES 669 - 671

SK 02040V

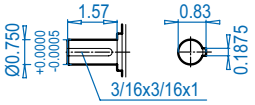

SK 02040AF

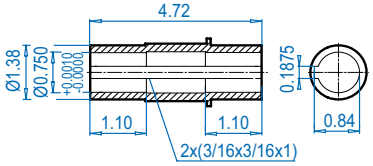

SK 02040AFB ⇨🕮 672

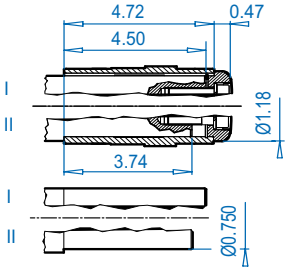

Mounting flange

BD (mm)	AJ	AK	BB	BF	GA
4.72 (120)	3.94	3.150 + 0.0005 - 0.0004	0.12	0.26	0.32
6.30 (160)	5.12	4.331 + 0.0005 - 0.0004	0.14	0.35	0.39

NEMA Dimensions

Type	AJ1	AK1	BB1	BD1	BF1	U1	V1	UY1	Y1	C	C1	CC
56C	5.88	4.500	0.18	6.61	0.43	0.625	2.06	0.71	0.188	10.94	10.94	4.29
140TC	5.88	4.500	0.18	6.61	0.43	0.875	2.12	0.96	0.188	10.94	10.94	4.29

Send Quote Requests to info@automatedpt.com
Call +1(800)985-6929 To Order or Order Online At Nordgearmotors.com

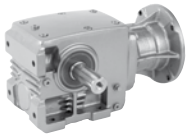


SK 02040 + NEMA

SK 02040AZ

NEMA Input

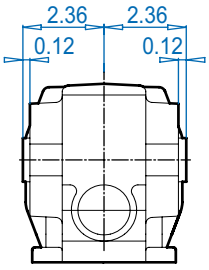

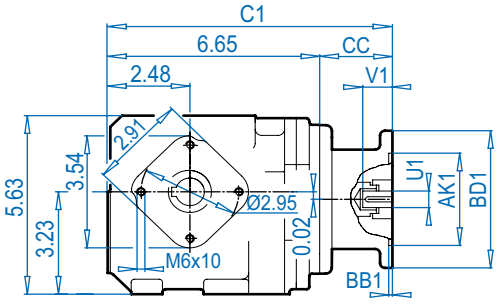

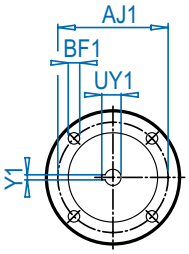

SK 02040AZ**D**

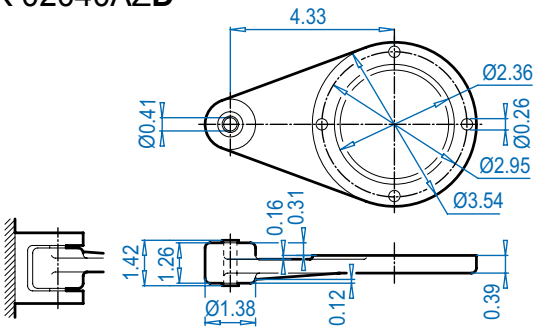

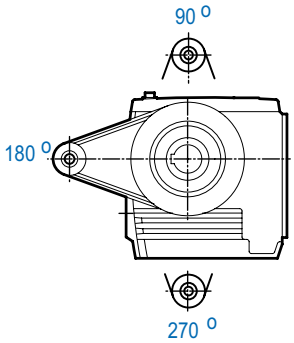

Dimensions in Inches
DIMENSIONS
ALTERNATE SHAFTS SEE PAGES 669 - 671

SK 02040AZ

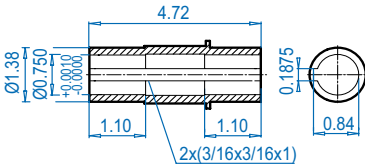

SK 02040AZ**B**

⇨📖 672

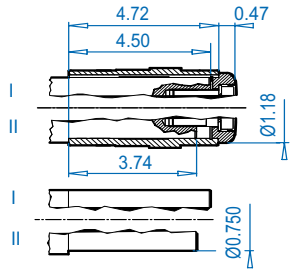

NEMA Dimensions

Type	AJ1	AK1	BB1	BD1	BF1	U1	V1	UY1	Y1	C1	CC
56C	5.88	4.500	0.18	6.61	0.43	0.625	2.06	0.71	0.188	10.94	4.29
140TC	5.88	4.500	0.18	6.61	0.43	0.875	2.12	0.96	0.188	10.94	4.29

Send Quote Requests to info@automatedpt.com
Call +1(800)985-6929 To Order or Order Online At Nordgearmotors.com

SK 02050 + Motor



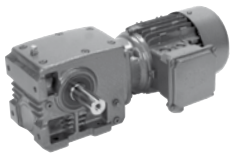

SK 02050

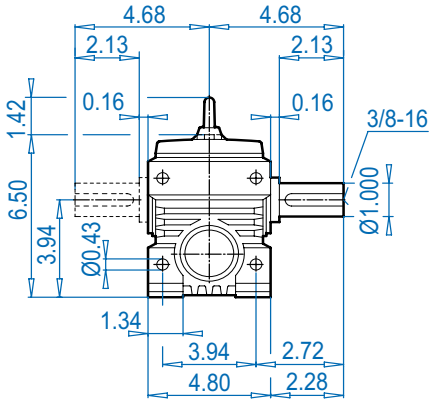

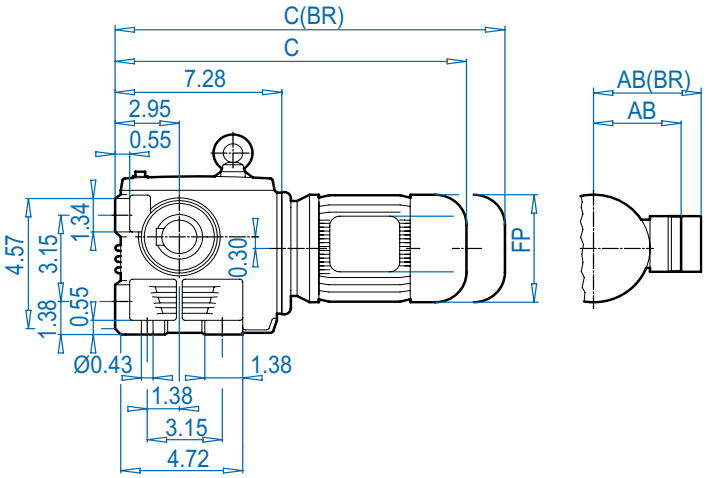

SK 02050VF

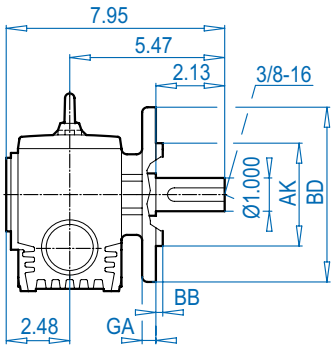

SK 02050AF

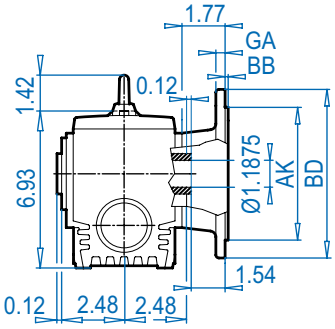

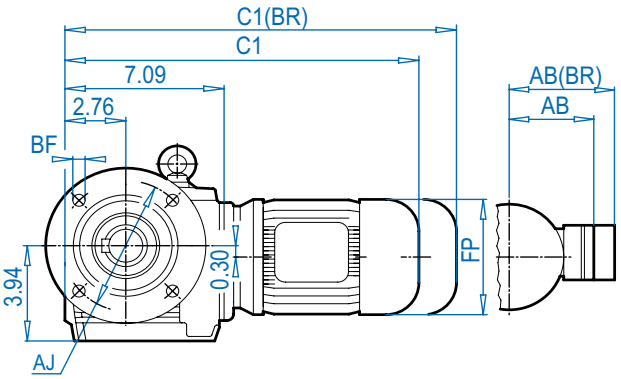

DIMENSIONS

Dimensions in Inches

ALTERNATE SHAFTS SEE PAGES 669 - 671

SK 02050V

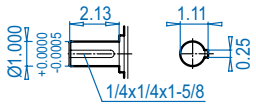

SK 02050AF

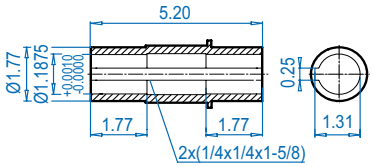

SK 02050AFB ⇨📖 672

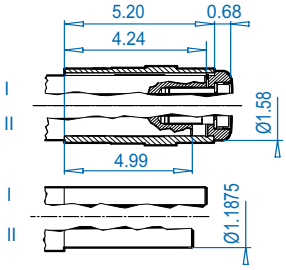

Mounting flange

Type	BD (mm)	AJ	AK	BB	BF	GA
SK 02050VF	6.30 (160)	5.12	4.331 + 0.0005 - 0.0004	0.16	0.35	0.39
SK 02050AF	7.87 (200)	6.50	5.118 + 0.0005 - 0.0004	0.14	0.43	0.47

Motor dimensions

Standard efficiency	63S/L	71S/L	80S/L	90S/L			For Other Connection Possibilities please see ⇨📖 666 & 667
Energy efficiency			80LH	90SH/LH			
AB	4.53	4.88	5.59	5.79			
AB (BR)	4.84	5.24	5.63	5.83			
C1	14.80	16.38	17.36	18.98			
C1 (BR)	17.01	18.66	19.89	21.93			
C	15.00	16.57	17.56	19.17			
C (BR)	17.20	18.86	20.08	22.13			
FP	5.12	5.71	6.50	7.20			

(BR) denotes Brakemotor

Send Quote Requests to info@automatedpt.com
Call +1(800)985-6929 To Order or Order Online At Nordgearmotors.com

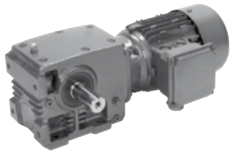

SK 02050 + Motor

SK 02050AZ

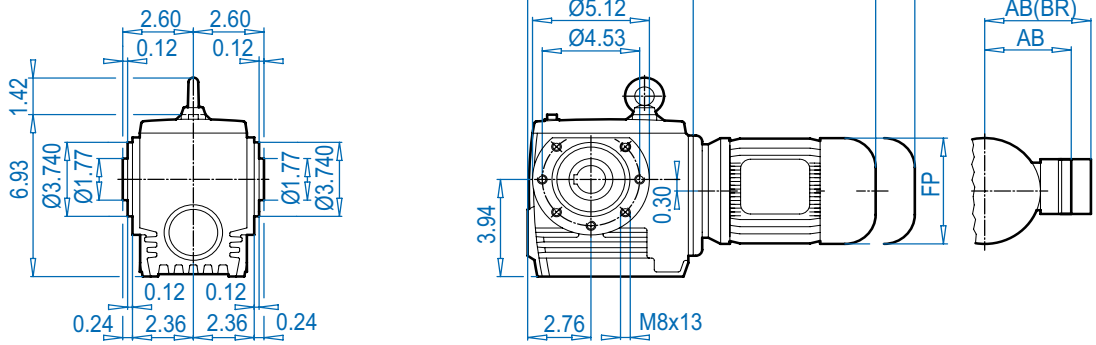

SK 02050AZ**D**

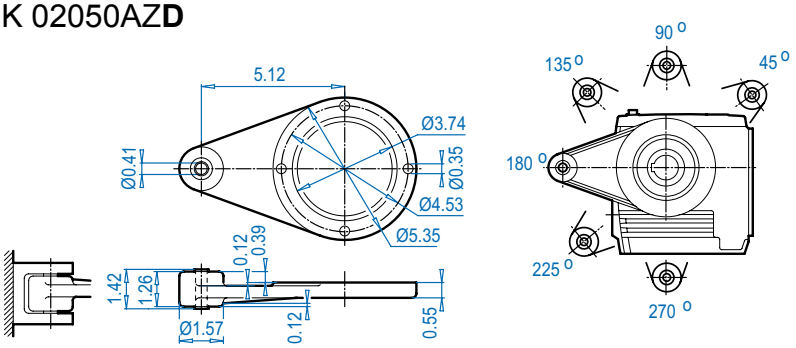

SK 02050AZ**SH**

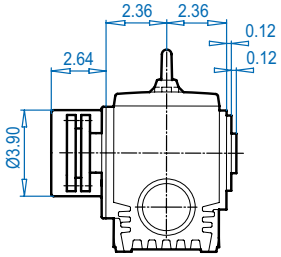

Dimensions in Inches
DIMENSIONS

SK 02050AZ

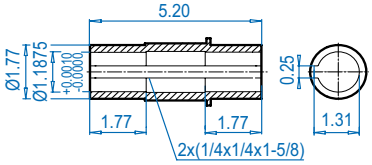

SK 02050AZ**B** ⇨🕮 672

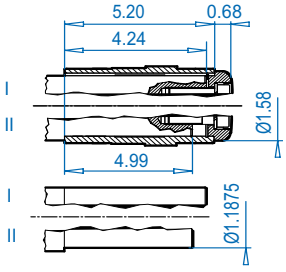

SK 02050AZ**S** ⇨🕮 671

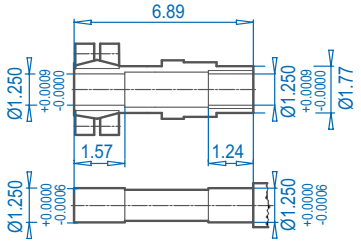

ALTERNATE SHAFTS SEE PAGES 669 - 671

Motor dimensions

Standard efficiency	63S/L	71S/L	80S/L	90S/L			For Other Connection Possibilities please see ⇨🕮 666 & 667
Energy efficiency			80LH	90SH/LH			
AB	4.53	4.88	5.59	5.79			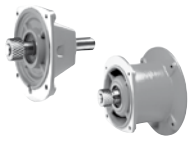
AB (BR)	4.84	5.24	5.63	5.83			
C1	14.80	16.38	17.36	18.98			
C1 (BR)	17.01	18.66	19.89	21.93			
FP	5.12	5.71	6.50	7.20			

(BR) denotes Brakemotor

Send Quote Requests to info@automatedpt.com
Call +1(800)985-6929 To Order or Order Online At Nordgearmotors.com

SK 02050 + NEMA





SK 02050

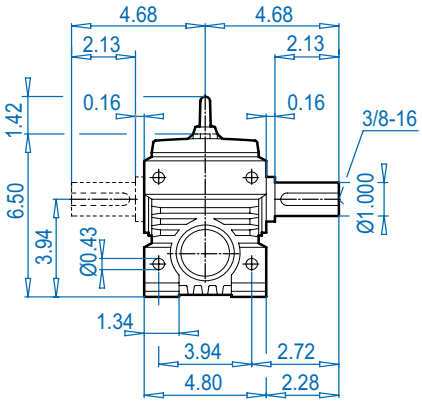

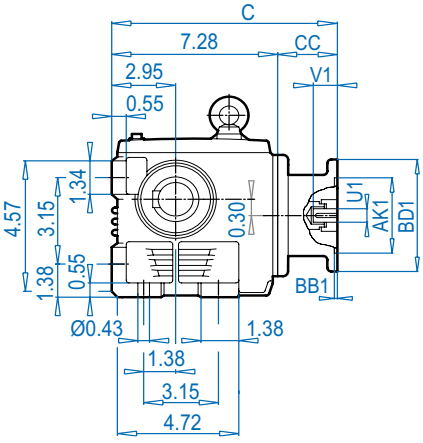

NEMA Input

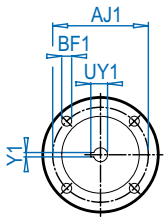

SK 02050VF

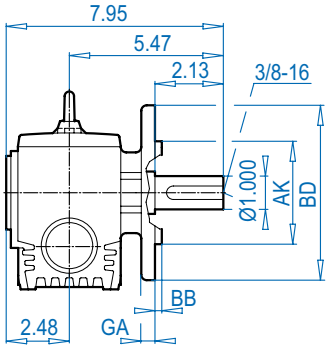

SK 02050AF

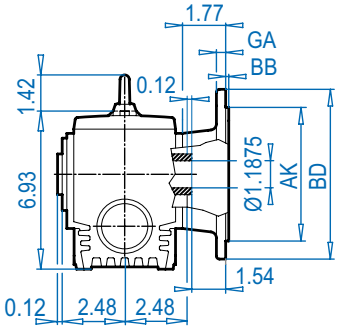

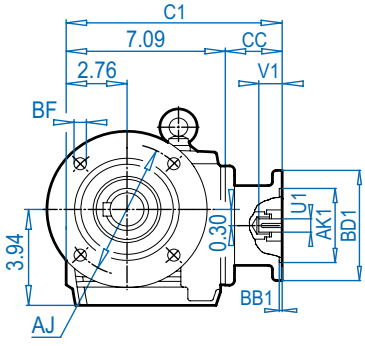

SK 02050V

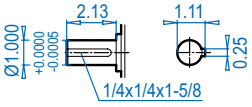

SK 02050AF

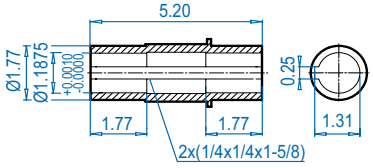

SK 02050AFB ⇨🕮 672

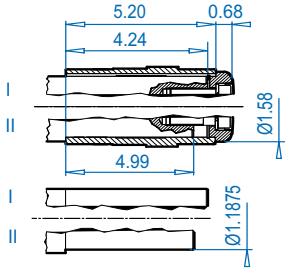

Mounting flange

Type	BD (mm)	AJ	AK		BB	BF	GA
SK 02050VF	6.30 (160)	5.12	4.331	+ 0.0005 - 0.0004	0.16	0.35	0.39
SK 02050AF	7.87 (200)	6.50	5.118	+ 0.0005 - 0.0004	0.14	0.43	0.47

NEMA Dimensions

Type	AJ1	AK1	BB1	BD1	BF1	U1	V1	UY1	Y1	C	C1	CC
56C	5.88	4.500	0.18	6.54	0.43	0.625	2.06	0.71	0.188	11.78	11.59	4.50
140TC	5.88	4.500	0.18	6.54	0.43	0.875	2.12	0.96	0.188	11.78	11.59	4.50

Send Quote Requests to info@automatedpt.com
Call +1(800)985-6929 To Order or Order Online At Nordgearmotors.com

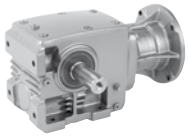


SK 02050 + NEMA

SK 02050AZ

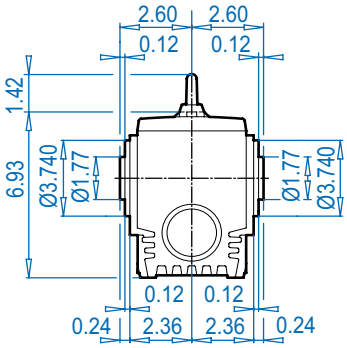

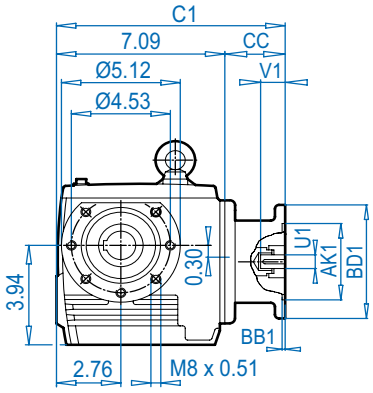

NEMA Input

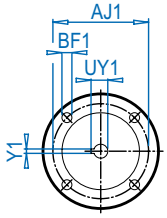

SK 02050AZ**D**

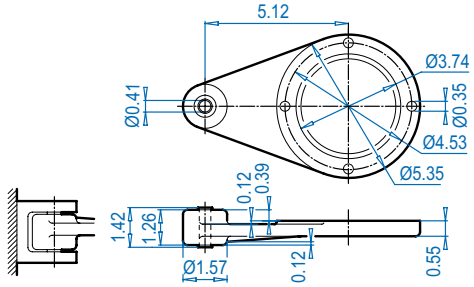

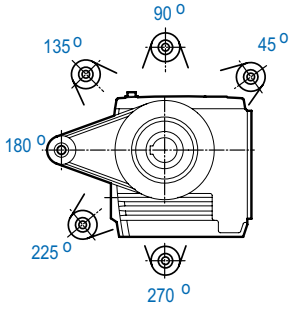

SK 02050AZ**SH**

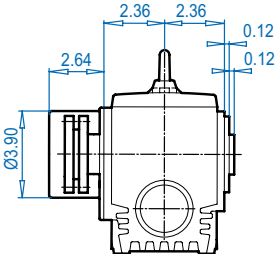

Dimensions in Inches
DIMENSIONS

ALTERNATE SHAFTS SEE PAGES 669 - 671

SK 02050AZ

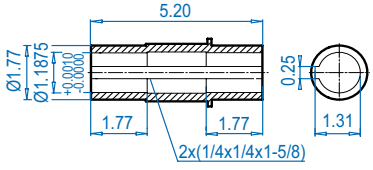

SK 02050AZ**B** ⇨🕮 672

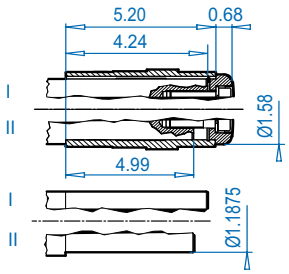

SK 02050AZ**S** ⇨🕮 671

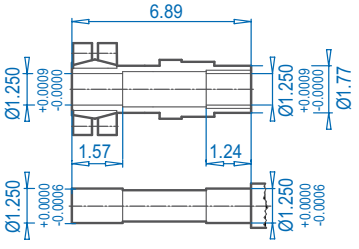

NEMA Dimensions

Type	AJ1	AK1	BB1	BD1	BF1	U1	V1	UY1	Y1	C1	CC
56C	5.88	4.500	0.18	6.54	0.43	0.625	2.06	0.71	0.188	11.59	4.50
140TC	5.88	4.500	0.18	6.54	0.43	0.875	2.12	0.96	0.188	11.59	4.50

Send Quote Requests to info@automatedpt.com
Call +1(800)985-6929 To Order or Order Online At Nordgearmotors.com

SK 13050 + Motor

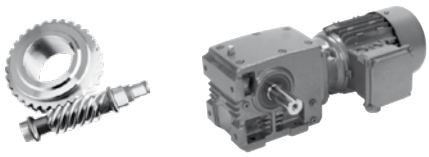

SK 13050

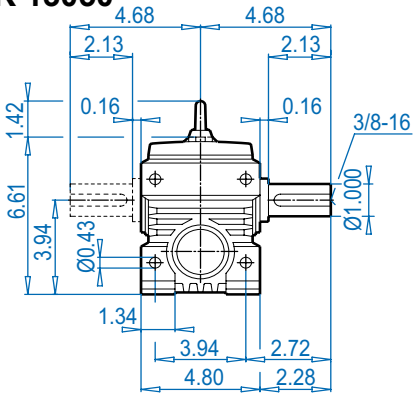

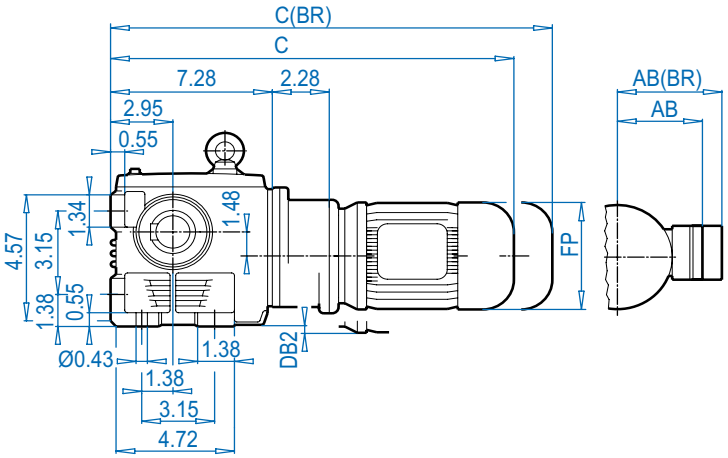

SK 13050VF

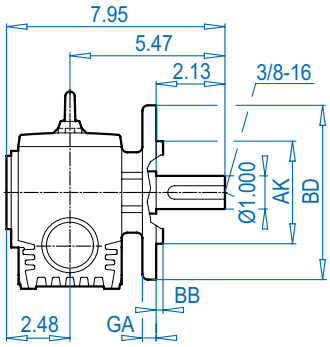

SK 13050AF

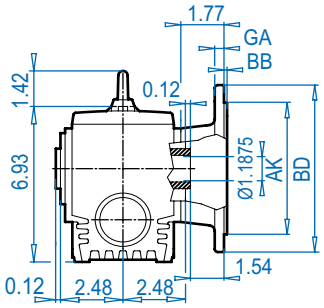

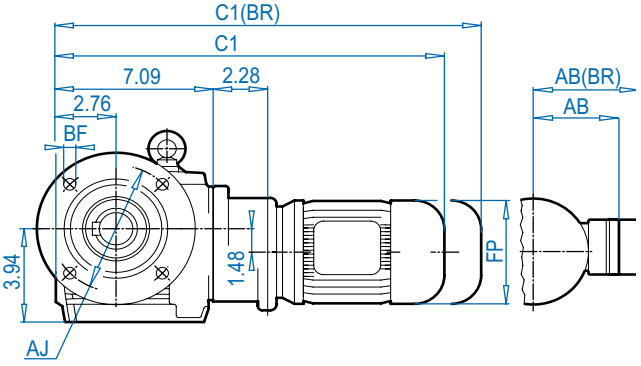

DIMENSIONS
Dimensions in Inches

SK 13050V

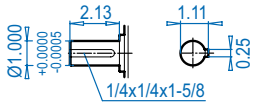

SK 13050AF

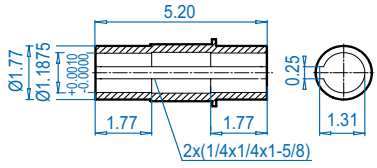

SK 13050AFB ⇨📖 672

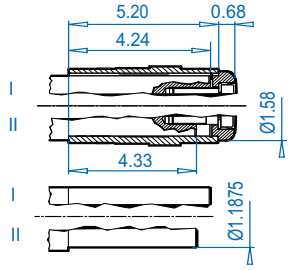

ALTERNATE SHAFTS SEE PAGES 669 - 671

Mounting flange

Type	BD (mm)	AJ	AK	BB	BF	GA
SK 13050VF	6.30 (160)	5.12	4.331 + 0.0005 - 0.0004	0.16	0.35	0.39
SK 13050AF	7.87 (200)	6.50	5.118 + 0.0005 - 0.0004	0.14	0.43	0.47

Motor dimensions

Standard efficiency	63S/L	71S/L				For Other Connection Possibilities please see ⇨📖 666 & 667
Energy efficiency						
AB	4.53	4.88				
AB (BR)	4.84	5.24				
C1	17.09	18.66				
C1 (BR)	19.29	20.94				
C	17.28	18.86				
C (BR)	19.49	21.14				
FP	5.12	5.71				
DB2	0.10	0.40				



(BR) denotes Brakemotor

Send Quote Requests to info@automatedpt.com
Call +1(800)985-6929 To Order or Order Online At Nordgearmotors.com

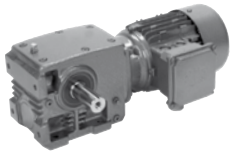

SK 13050 + Motor

SK 13050AZ

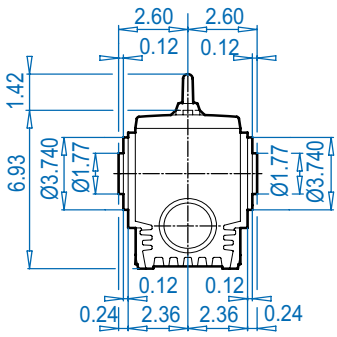

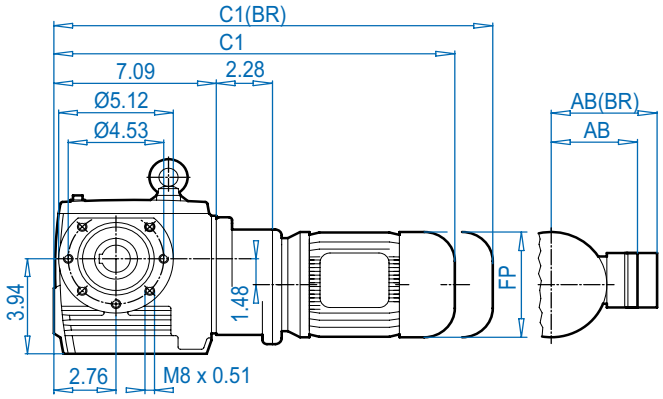

SK 13050AZ**D**

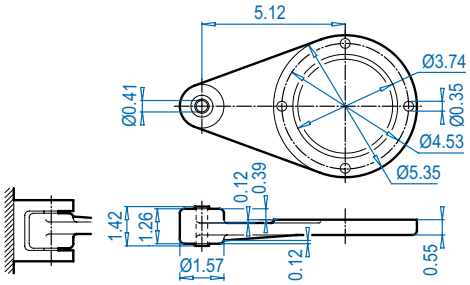

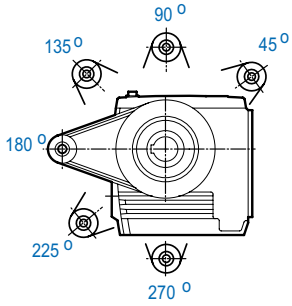

SK 13050AZ**SH**

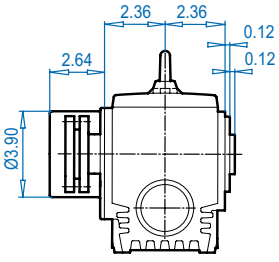

Dimensions in Inches
DIMENSIONS

SK 13050AZ

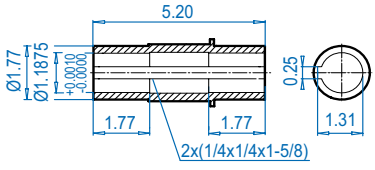

SK 13050AZ**B** ⇨🕮 672

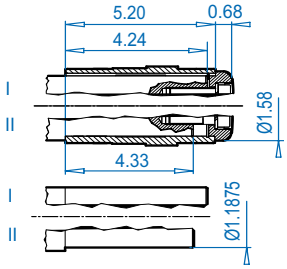

SK 13050AZ**S** ⇨🕮 671

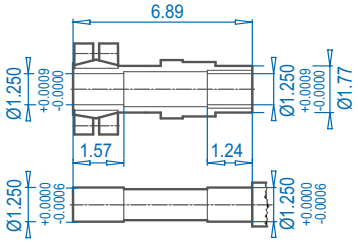

ALTERNATE SHAFTS SEE PAGES 669 - 671

Motor dimensions

Standard efficiency	63S/L	71S/L				For Other Connection Possibilities please see ⇨🕮 666 & 667
Energy efficiency						
AB	4.53	4.88				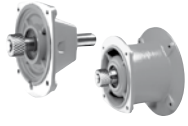
AB (BR)	4.84	5.24				
C1	17.09	18.66				
C1 (BR)	19.29	20.94				
FP	5.12	5.71				

(BR) denotes Brakemotor

Send Quote Requests to info@automatedpt.com
Call +1(800)985-6929 To Order or Order Online At Nordgearmotors.com

SK 13050 + NEMA





SK 13050

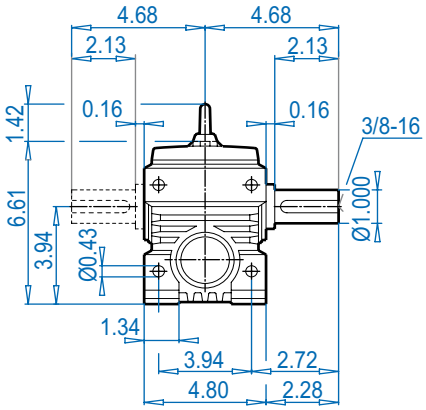

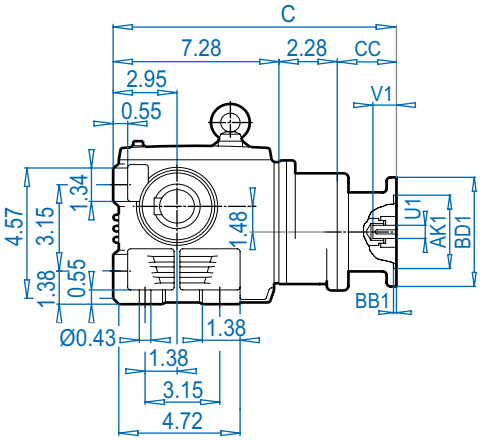

NEMA Input

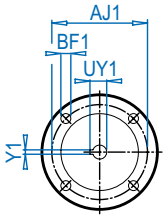

SK 13050VF

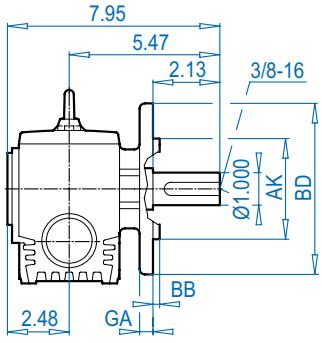

SK 13050AF

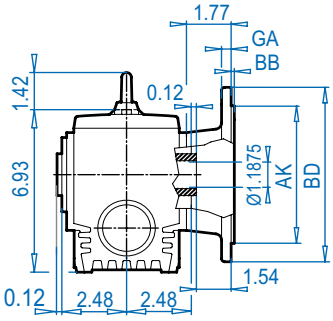

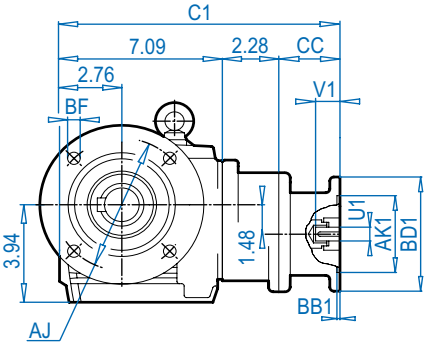

SK 13050V

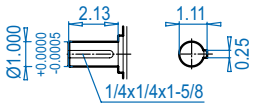

SK 13050AF

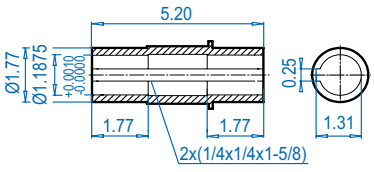

SK 13050AFB ⇨🕮 672

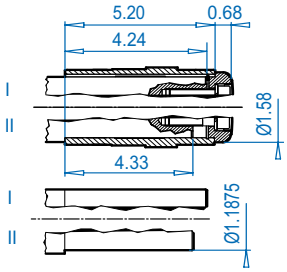

Mounting flange

Type	BD (mm)	AJ	AK		BB	BF	GA
SK 13050VF	6.30 (160)	5.12	4.331	+ 0.0005 - 0.0004	0.16	0.35	0.39
SK 13050AF	7.87 (200)	6.50	5.118	+ 0.0005 - 0.0004	0.14	0.43	0.47

NEMA Dimensions

Type	AJ1	AK1	BB1	BD1	BF1	U1	V1	UY1	Y1	C	C1	CC
56C	5.88	4.500	0.18	6.54	0.43	0.625	2.06	0.71	0.188	14.06	13.87	4.50

Send Quote Requests to info@automatedpt.com
Call +1(800)985-6929 To Order or Order Online At Nordgearmotors.com

DRIVESYSTEMS

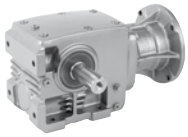



SK 13050 + NEMA

SK 13050AZ

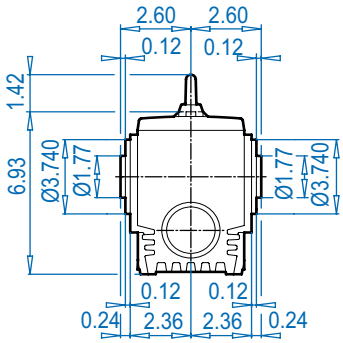

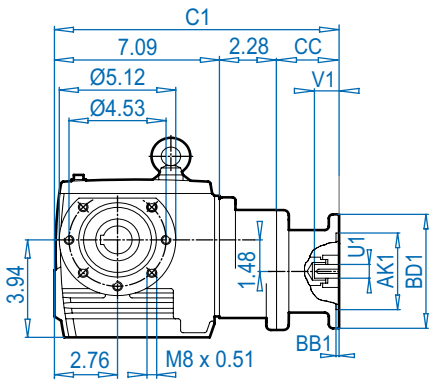

NEMA Input

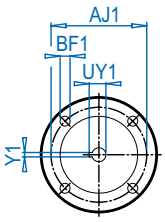

SK 13050AZ**D**

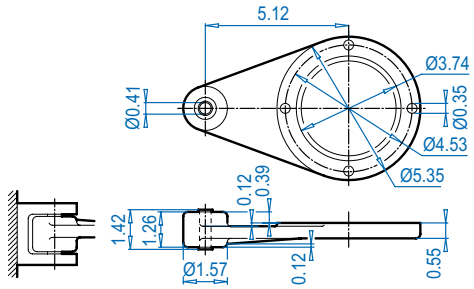

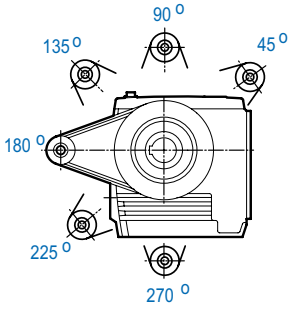

SK 13050AZ**SH**

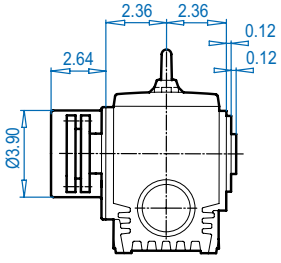

Dimensions in Inches
DIMENSIONS

ALTERNATE SHAFTS SEE PAGES 669 - 671

SK 13050AZ

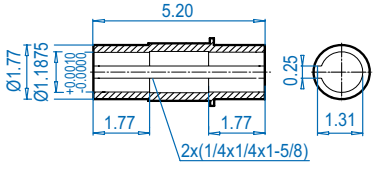

SK 13050AZ**B** ⇨🕮 672

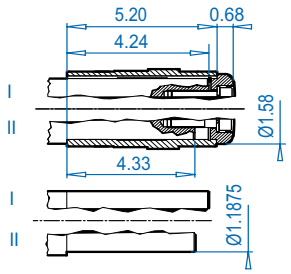

SK 13050AZ**S** ⇨🕮 671

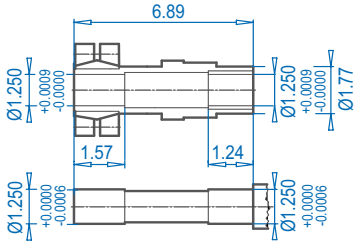

NEMA Dimensions

Type	AJ1	AK1	BB1	BD1	BF1	U1	V1	UY1	Y1	C1	CC
56C	5.88	4.500	0.18	6.54	0.43	0.625	2.06	0.71	0.188	13.87	4.50

Send Quote Requests to info@automatedpt.com
Call +1(800)985-6929 To Order or Order Online At Nordgearmotors.com

SK 12063 + Motor



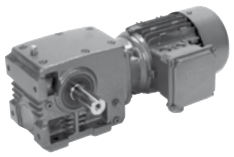

SK 12063

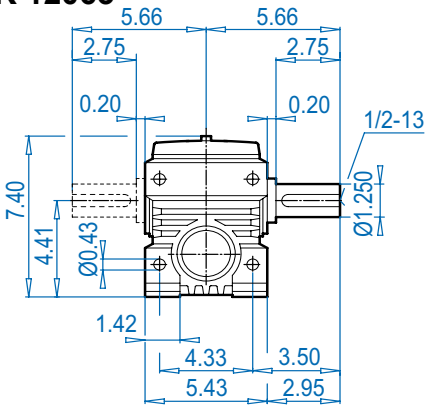

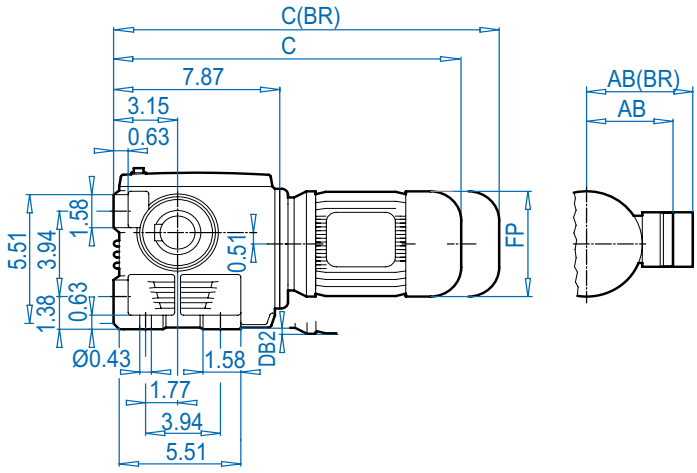

SK 12063VF

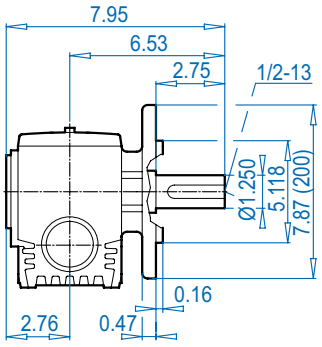

SK 12063AF

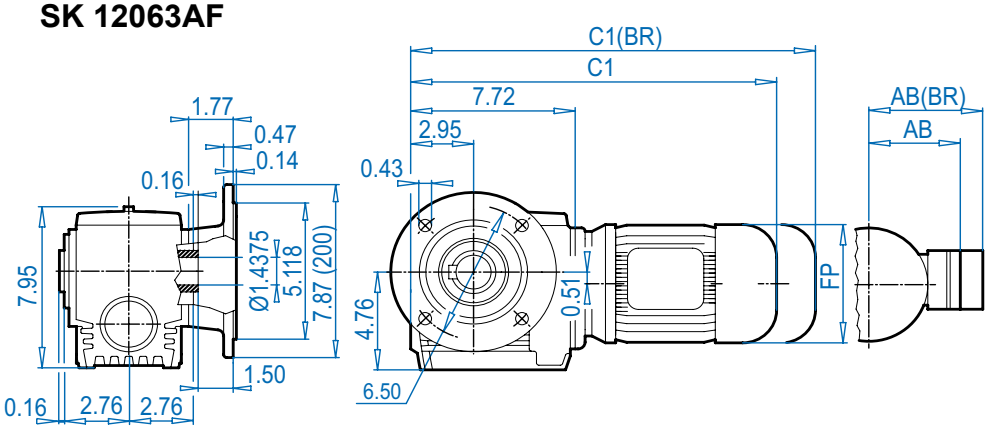

SK 12063V

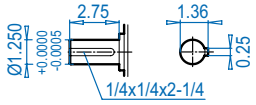

SK 12063AF

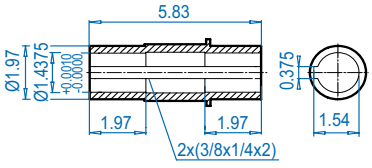

SK 12063AFB ⇨🕮 672

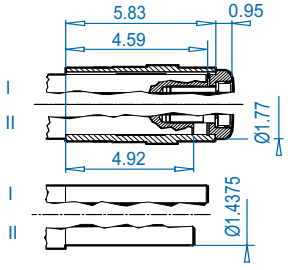

Motor dimensions

Standard efficiency	63S/L	71S/L	80S/L	90S/L	100L			For Other Connection Possibilities please see ⇨🕮 666 & 667
Energy efficiency			80LH	90SH/LH	100LH			
AB	4.53	4.88	5.59	5.79	6.65			
AB (BR)	4.84	5.24	5.63	5.83	6.26			
C1	15.43	17.01	17.99	19.61	20.79			
C1 (BR)	17.64	19.29	20.51	22.56	24.37			
C	15.59	17.17	18.15	19.76	20.94			
C (BR)	17.79	19.45	20.67	22.72	24.53			
FP	5.12	5.71	6.50	7.20	7.91			
DB2	-	-	-	-	0.10			

(BR) denotes Brakemotor

DIMENSIONS
Dimensions in Inches
ALTERNATE SHAFTS SEE PAGES 669 - 671

Send Quote Requests to info@automatedpt.com
Call +1(800)985-6929 To Order or Order Online At Nordgearmotors.com

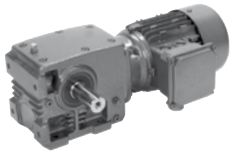

SK 12063 + Motor

SK 12063AZ

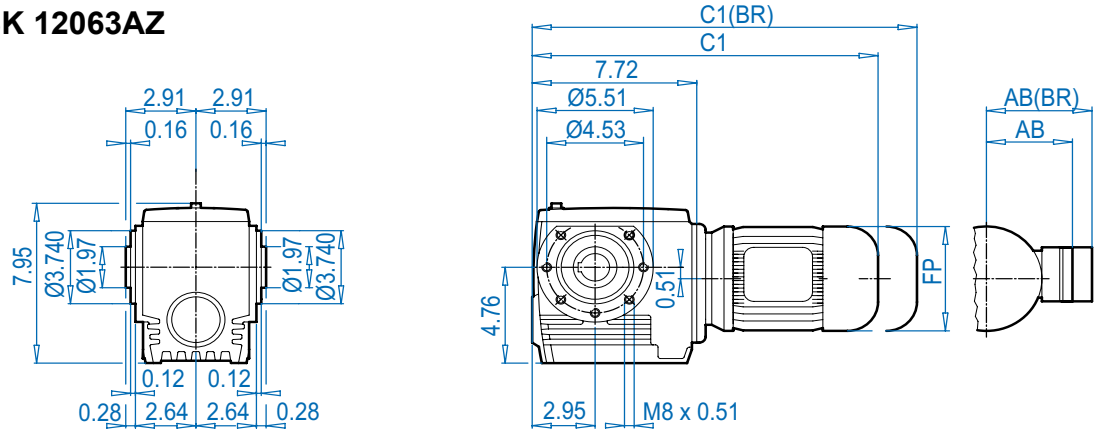

SK 12063AZ**D**

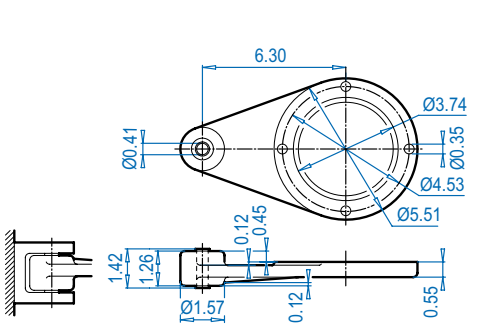

SK 12063AZ**SH**

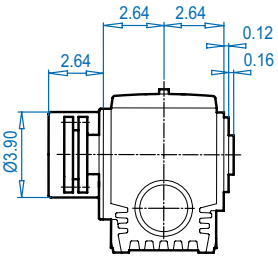

Dimensions in Inches
DIMENSIONS

SK 12063AZ

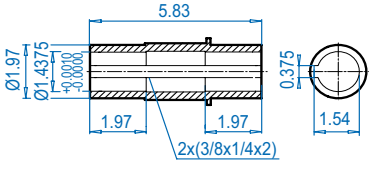

SK 12063AZ**B** ⇨🕮 672

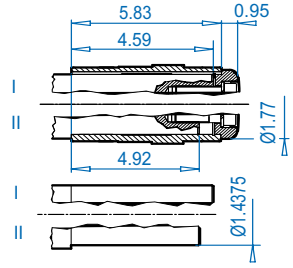

SK 12063AZ**S** ⇨🕮 671

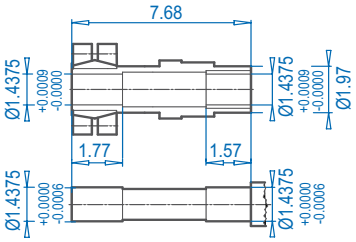

ALTERNATE SHAFTS SEE PAGES 669 - 671

Motor dimensions

Standard efficiency	63S/L	71S/L	80S/L	90S/L	100L			For Other Connection Possibilities please see ⇨🕮 666 & 667
Energy efficiency			80LH	90SH/LH	100LH			
AB	4.53	4.88	5.59	5.79	6.65			
AB (BR)	4.84	5.24	5.63	5.83	6.26			
C1	15.43	17.01	17.99	19.61	20.79			
C1 (BR)	17.64	19.29	20.51	22.56	24.37			
FP	5.12	5.71	6.50	7.20	7.91			

(BR) denotes Brakemotor

Send Quote Requests to info@automatedpt.com
Call +1(800)985-6929 To Order or Order Online At Nordgearmotors.com

SK 12063 + NEMA

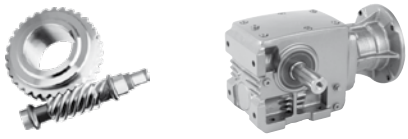

NORD DRIVESYSTEMS

SK 12063

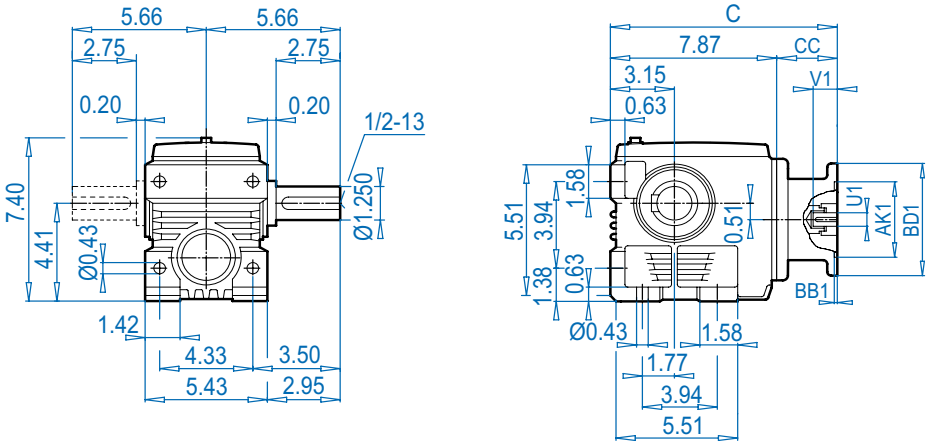

NEMA Input

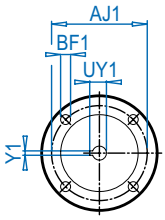

SK 12063VF

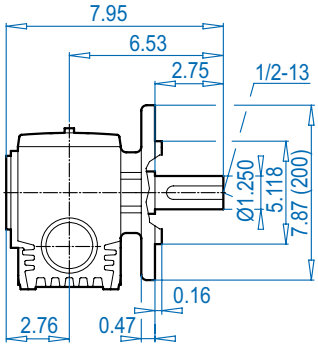

SK 12063AF

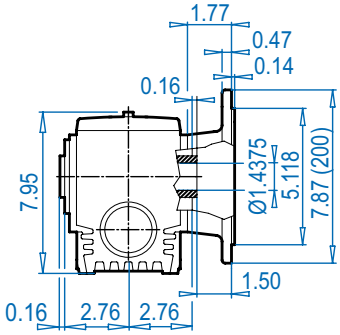

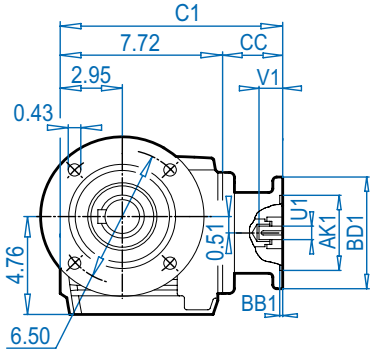

SK 12063V

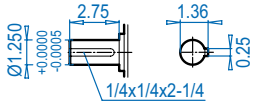

SK 12063AF

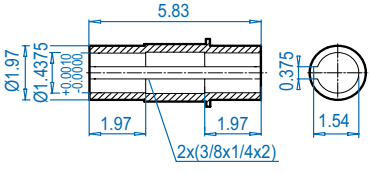

SK 12063AFB ⇨📖 672

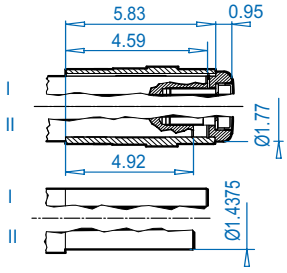

NEMA Dimensions

Type	AJ1	AK1	BB1	BD1	BF1	U1	V1	UY1	Y1	C	C1	CC
56C	5.88	4.500	0.18	6.54	0.43	0.625	2.06	0.71	0.188	12.37	12.22	4.50
140TC	5.88	4.500	0.18	6.54	0.43	0.875	2.12	0.96	0.188	12.37	12.22	4.50
180TC	7.25	8.500	0.23	9.17	0.59	1.125	2.62	1.24	0.250	13.52	13.37	5.65

DIMENSIONS
Dimensions in Inches
ALTERNATE SHAFTS SEE PAGES 669 - 671

Send Quote Requests to info@automatedpt.com
Call +1(800)985-6929 To Order or Order Online At Nordgearmotors.com

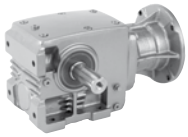


SK 12063 + NEMA

SK 12063AZ

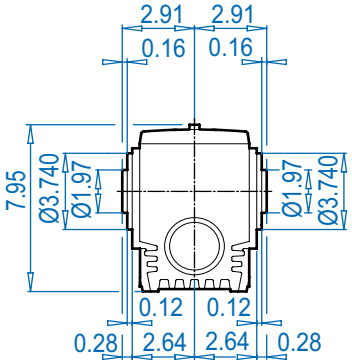

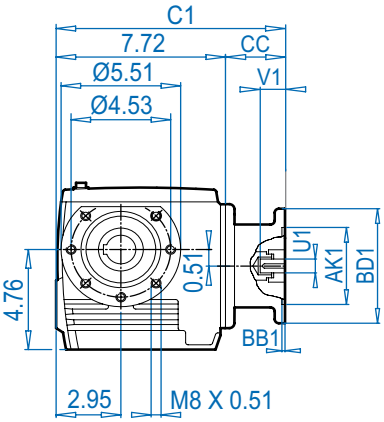

NEMA Input

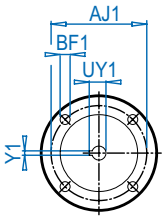

SK 12063AZ**D**

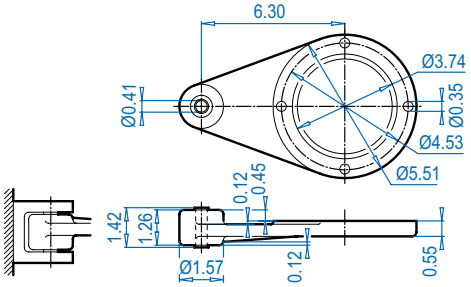

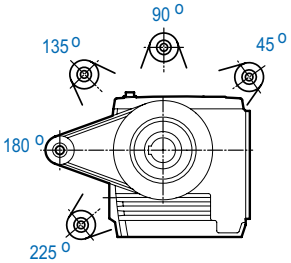

SK 12063AZ**SH**

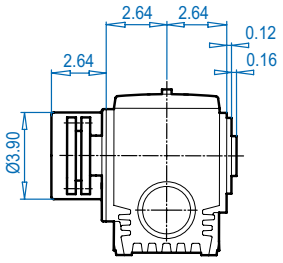

DIMENSIONS
Dimensions in Inches

SK 12063AZ

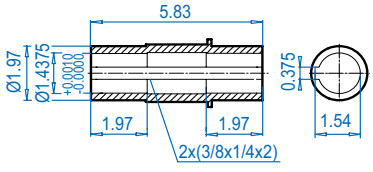

SK 12063AZ**B** ⇨📖 672

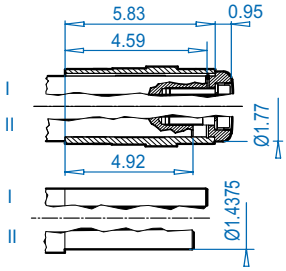

SK 12063AZ**S** ⇨📖 671

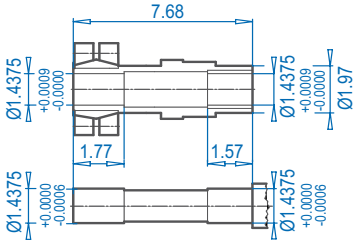

ALTERNATE SHAFTS SEE PAGES 669 - 671

NEMA Dimensions

Type	AJ1	AK1	BB1	BD1	BF1	U1	V1	UY1	Y1	C1	CC
56C	5.88	4.500	0.18	6.54	0.43	0.625	2.06	0.71	0.188	12.22	4.50
140TC	5.88	4.500	0.18	6.54	0.43	0.875	2.12	0.96	0.188	12.22	4.50
180TC	7.25	8.500	0.23	9.17	0.59	1.125	2.62	1.24	0.250	13.37	5.65

Send Quote Requests to info@automatedpt.com
Call +1(800)985-6929 To Order or Order Online At Nordgearmotors.com

SK 13063 + Motor



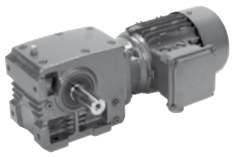

SK 13063

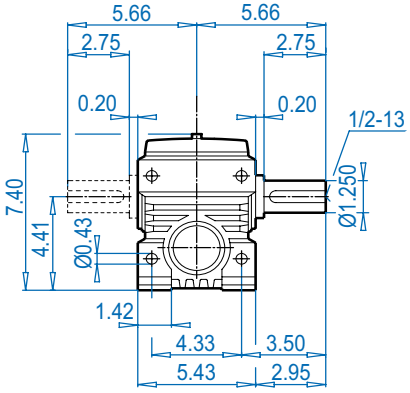

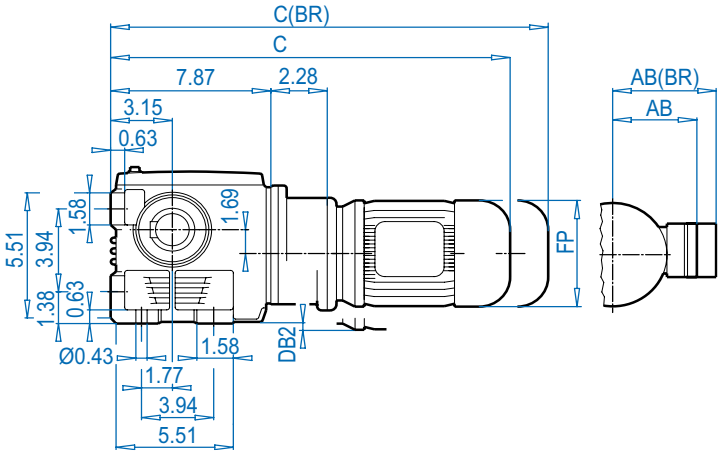

SK 13063VF

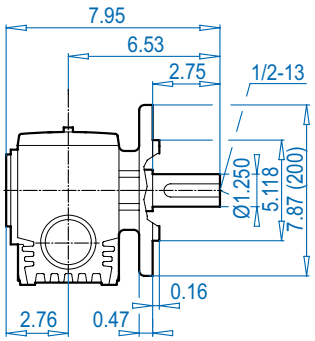

SK 13063AF

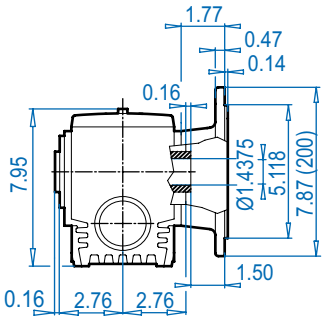

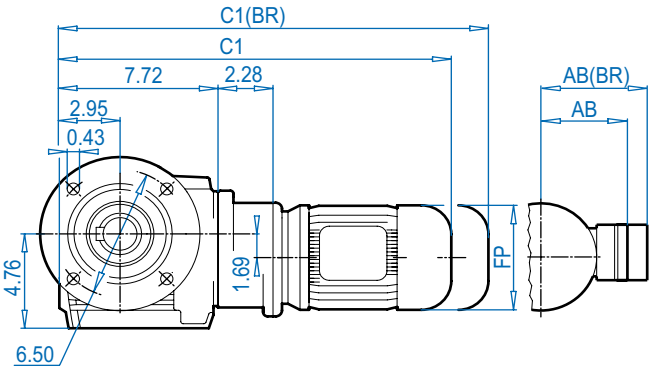

SK 13063V

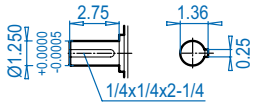

SK 13063AF

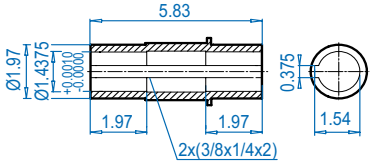

SK 13063AFB ⇨📖 672

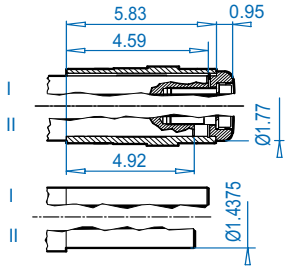

DIMENSIONS — Dimensions in Inches

ALTERNATE SHAFTS SEE PAGES 669 - 671

Motor dimensions

Standard efficiency	63S/L	71S/L					For Other Connection Possibilities please see ⇨📖 666 & 667
Energy efficiency							
AB	4.53	4.88					
AB (BR)	4.84	5.24					
C1	17.72	19.29					
C1 (BR)	19.92	21.57					
C	17.87	19.45					
C (BR)	20.08	21.73					
FP	5.12	5.71					
DB2	-	0.14					



(BR) denotes Brakemotor

Send Quote Requests to info@automatedpt.com
Call +1(800)985-6929 To Order or Order Online At Nordgearmotors.com

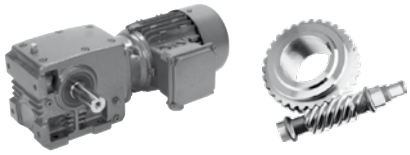

SK 13063 + Motor

SK 13063AZ

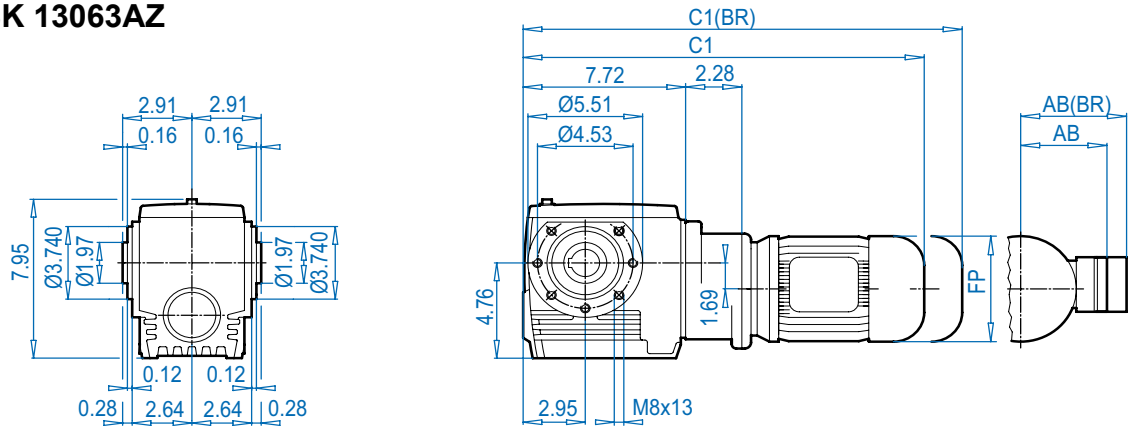

SK 13063AZ**D**

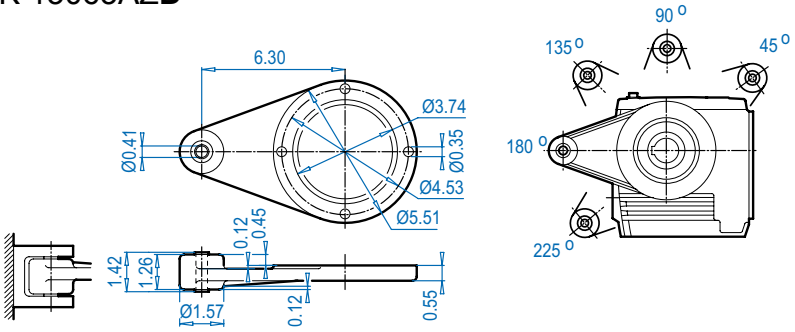

SK 13063AZ**SH**

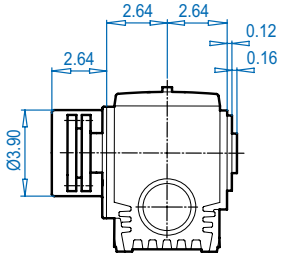

Dimensions in Inches
DIMENSIONS

SK 13063AZ

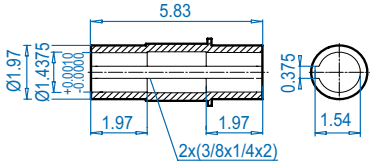

SK 13063AZ**B** ⇨📖 672

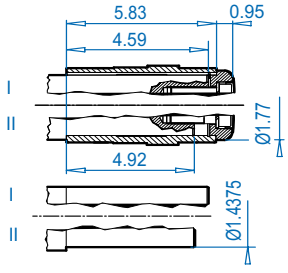

SK 13063AZ**S** ⇨📖 671

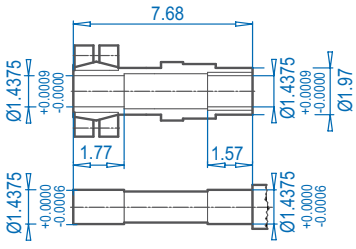

ALTERNATE SHAFTS SEE PAGES 669 - 671

Motor dimensions

Standard efficiency	63S/L	71S/L					For Other Connection Possibilities please see ⇨📖 666 & 667
Energy efficiency							
AB	4.53	4.88					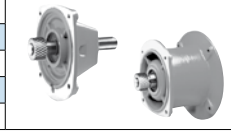
AB (BR)	4.84	5.24					
C1	17.72	19.29					
C1 (BR)	19.92	21.57					
FP	5.12	5.71					

(BR) denotes Brakemotor

Send Quote Requests to info@automatedpt.com
Call +1(800)985-6929 To Order or Order Online At Nordgearmotors.com

SK 13063 + NEMA





SK 13063

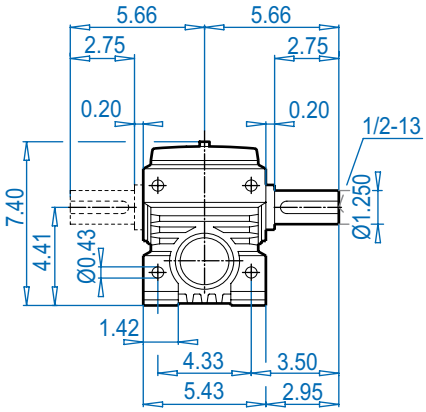

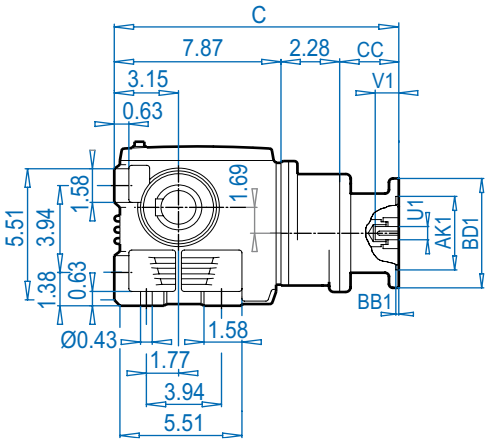

NEMA Input

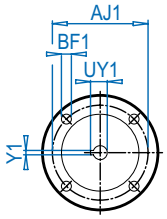

SK 13063VF

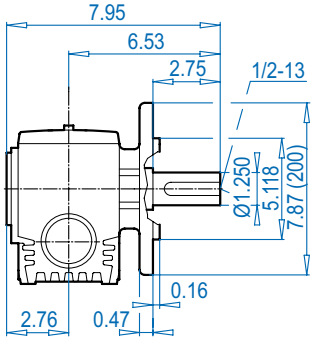

SK 13063AF

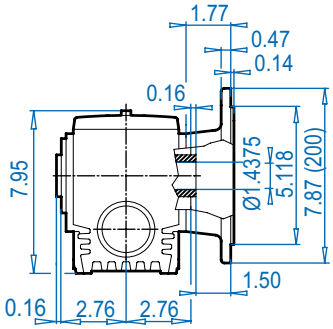

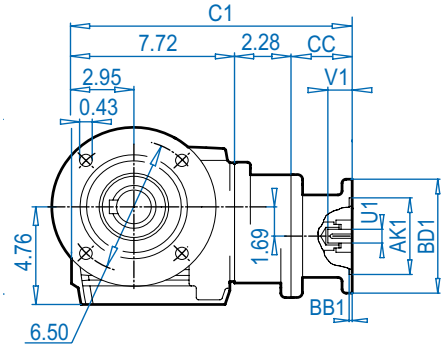

SK 13063V

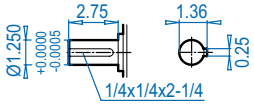

SK 13063AF

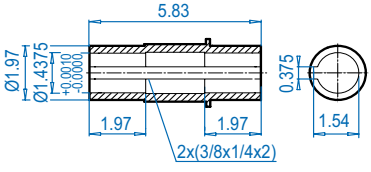

SK 13063AFB ⇨🕮 672

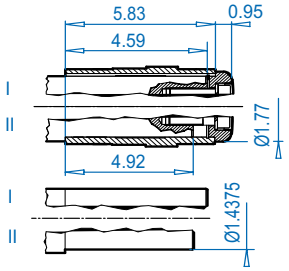

NEMA Dimensions

Type	AJ1	AK1	BB1	BD1	BF1	U1	V1	UY1	Y1	C	C1	CC
56C	5.88	4.500	0.18	6.54	0.43	0.625	2.06	0.71	0.188	14.65	15.50	4.50

DIMENSIONS
Dimensions in Inches
ALTERNATE SHAFTS SEE PAGES 669 - 671

Send Quote Requests to info@automatedpt.com
Call +1(800)985-6929 To Order or Order Online At Nordgearmotors.com

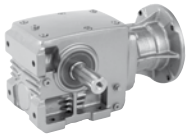


SK 13063 + NEMA

SK 13063AZ

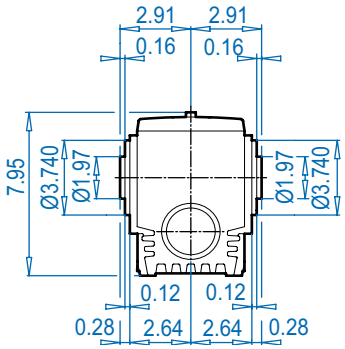

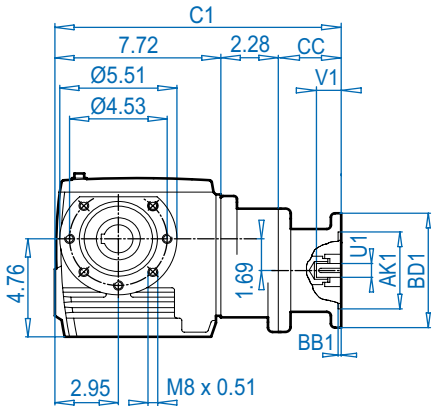

NEMA Input

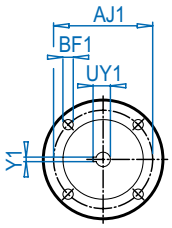

SK 13063AZ**D**

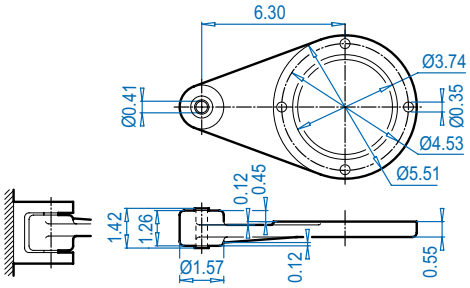

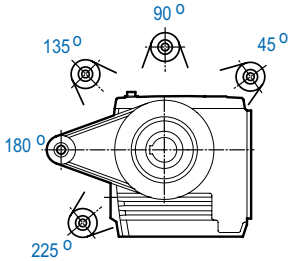

SK 13063AZ**SH**

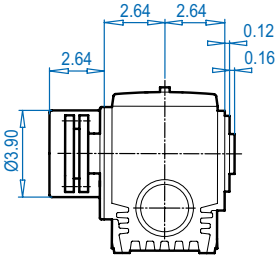

Dimensions in Inches
DIMENSIONS

ALTERNATE SHAFTS SEE PAGES 669 - 671

SK 13063AZ

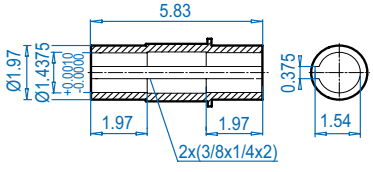

SK 13063AZ**B** ⇨🕮 672

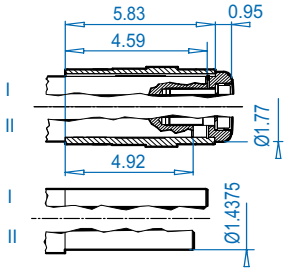

SK 13063AZ**S** ⇨🕮 671

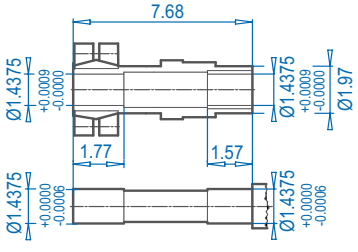

NEMA Dimensions

Type	AJ1	AK1	BB1	BD1	BF1	U1	V1	UY1	Y1	C1	CC
56C	5.88	4.500	0.18	6.54	0.43	0.625	2.06	0.71	0.188	15.50	4.50

Send Quote Requests to info@automatedpt.com
Call +1(800)985-6929 To Order or Order Online At Nordgearmotors.com

SK 12080 + Motor



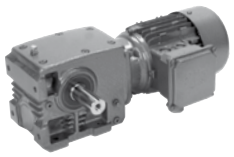

SK 12080

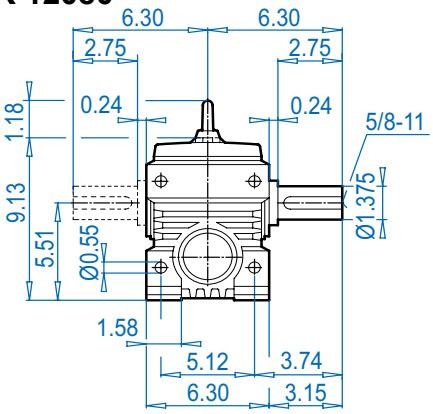

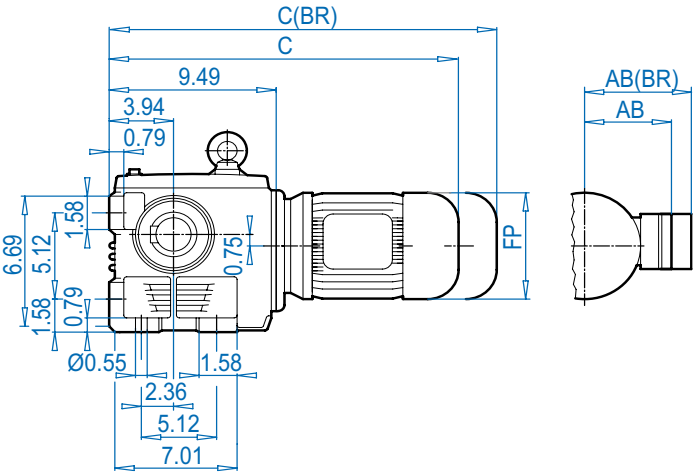

SK 12080VF

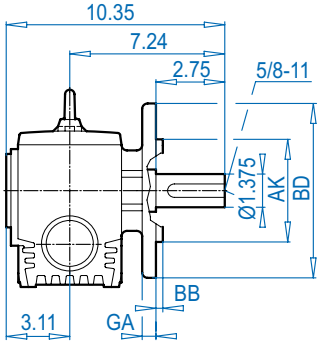

SK 12080AF

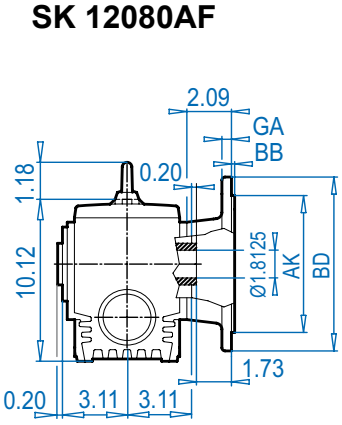

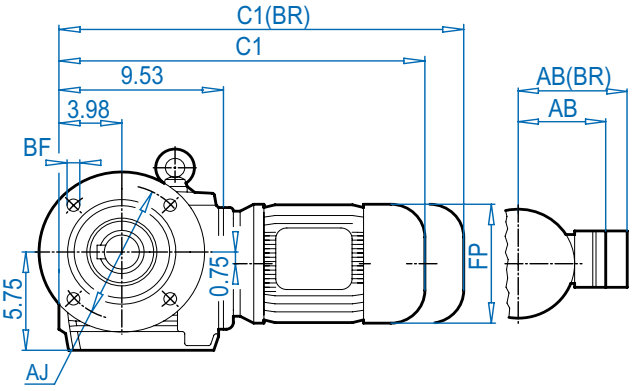

SK 12080V

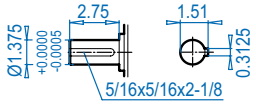

SK 12080AF

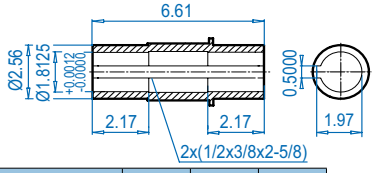

SK 12080AFB ⇨🕮 672

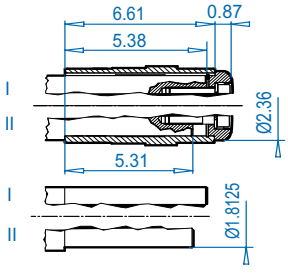

Mounting flange

Type	BD (mm)	AJ	AK	BB	BF	GA
SK 12080VF	7.87 (200)	6.50	5.118 + 0.0005 - 0.0004	0.16	0.43	0.47
SK 12080AF	9.84 (250)	8.46	7.087 + 0.0006 - 0.0005	0.16	0.55	0.59
SK 12080AF	11.81 (300)	10.43	9.055 + 0.0000 - 0.0014	0.16	0.55	0.79

Motor dimensions

Standard efficiency	63S/L	71S/L	80S/L	90S/L	100L		For Other Connection Possibilities please see ⇨🕮 666 & 667
Energy efficiency			80LH	90SH/LH	100LH	112MH	
AB	4.53	4.88	5.59	5.79	6.65	7.05	
AB (BR)	4.84	5.24	5.63	5.83	6.26	6.69	
C1	17.25	18.82	19.80	21.42	22.60	23.50	
C1 (BR)	19.45	21.10	22.32	24.37	26.18	27.17	
C	17.21	18.78	19.76	21.38	22.56	23.46	
C (BR)	19.41	21.06	22.28	24.33	26.14	27.13	
FP	5.12	5.71	6.50	7.20	7.91	8.98	

(BR) denotes Brakemotor

DIMENSIONS
Dimensions in Inches
ALTERNATE SHAFTS SEE PAGES 669 - 671

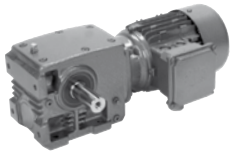

SK 12080 + Motor

SK 12080AZ

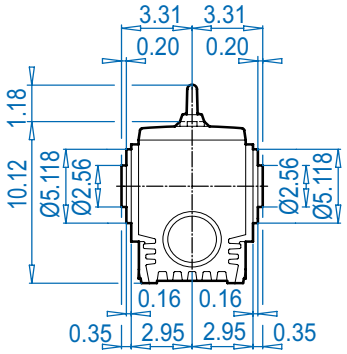

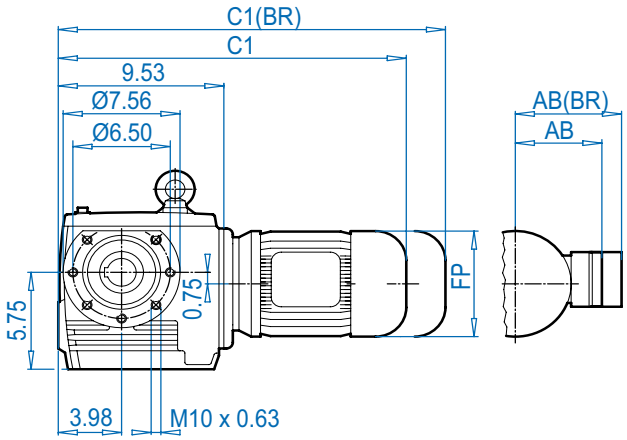

SK 12080AZ**D**

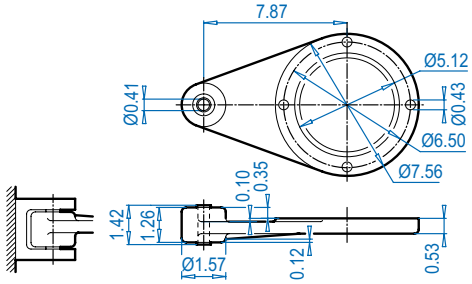

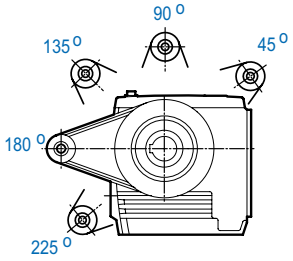

SK 12080AZ**SH**

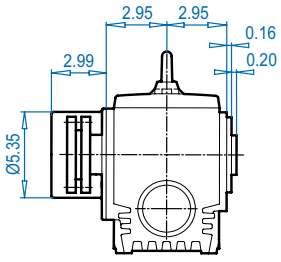

Dimensions in Inches
DIMENSIONS

SK 12080AZ

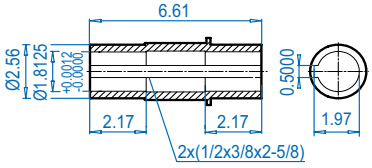

SK 12080AZ**B** ⇨🕮 672

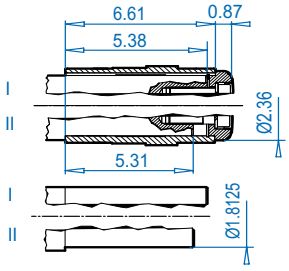

SK 12080AZ**S** ⇨🕮 671

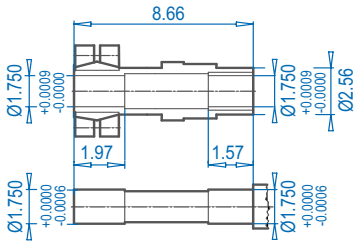

ALTERNATE SHAFTS SEE PAGES 669 - 671

Motor dimensions

Standard efficiency	63S/L	71S/L	80S/L	90S/L	100L		For Other Connection Possibilities please see ⇨🕮 666 & 667
Energy efficiency			80LH	90SH/LH	100LH	112MH	
AB	4.53	4.88	5.59	5.79	6.65	7.05	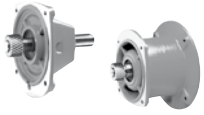
AB (BR)	4.84	5.24	5.63	5.83	6.26	6.69	
C1	17.25	18.82	19.80	21.42	22.60	23.50	
C1 (BR)	19.45	21.10	22.32	24.37	26.18	27.17	
FP	5.12	5.71	6.50	7.20	7.91	8.98	

(BR) denotes Brakemotor

Send Quote Requests to info@automatedpt.com
Call +1(800)985-6929 To Order or Order Online At Nordgearmotors.com

SK 12080 + NEMA





SK 12080

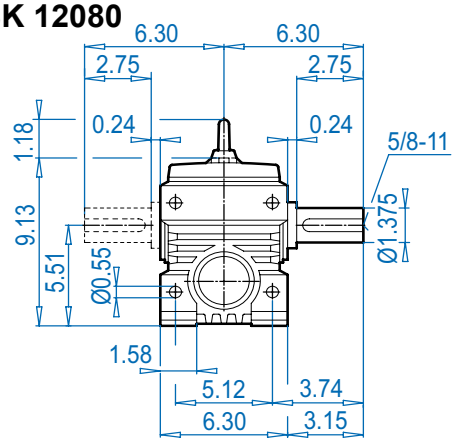

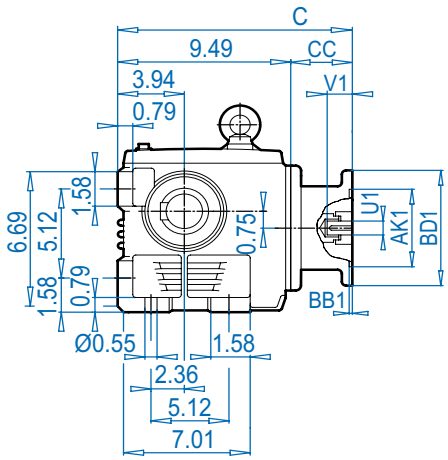

NEMA Input

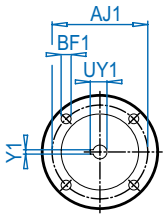

SK 12080VF

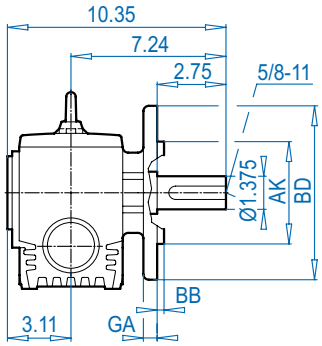

SK 12080AF

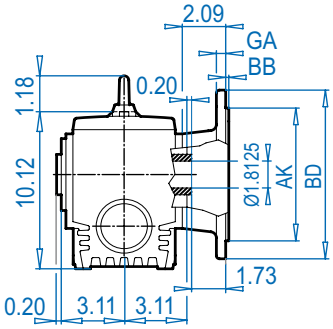

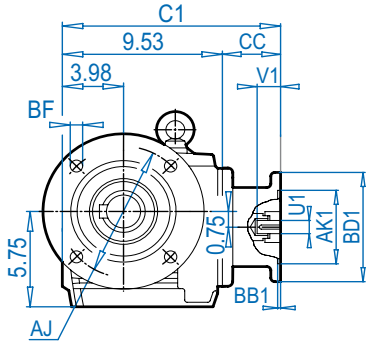

SK 12080V

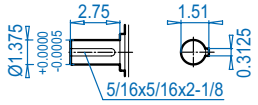

SK 12080AF

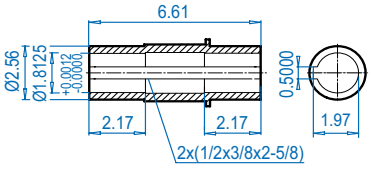

SK 12080AFB

⇨🕮 672

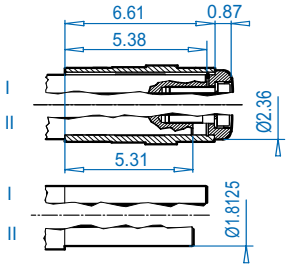

Mounting flange

Type	BD (mm)	AJ	AK	BB	BF	GA
SK 12080VF	7.87 (200)	6.50	5.118 +0.0005 -0.0004	0.16	0.43	0.47
SK 12080AF	9.84 (250)	8.46	7.087 +0.0006 -0.0005	0.16	0.55	0.59
SK 12080AF	11.81 (300)	10.43	9.055 +0.0000 -0.0014	0.16	0.55	0.79

NEMA Dimensions

Type	AJ1	AK1	BB1	BD1	BF1	U1	V1	UY1	Y1	C	C1	CC
56C	5.88	4.500	0.18	6.54	0.43	0.625	2.06	0.71	0.188	13.99	14.03	4.50
140TC	5.88	4.500	0.18	6.54	0.43	0.875	2.12	0.96	0.188	13.99	14.03	4.50
180TC	7.25	8.500	0.23	9.17	0.59	1.125	2.62	1.24	0.250	15.14	15.18	5.65

Send Quote Requests to info@automatedpt.com
Call +1(800)985-6929 To Order or Order Online At Nordgearmotors.com

DRIVESYSTEMS

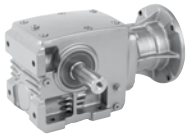



SK 12080 + NEMA

SK 12080AZ

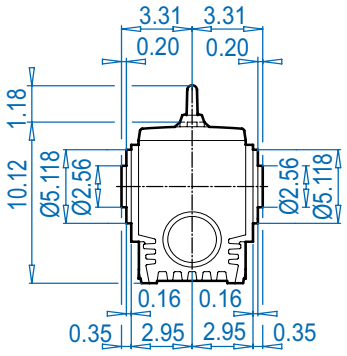

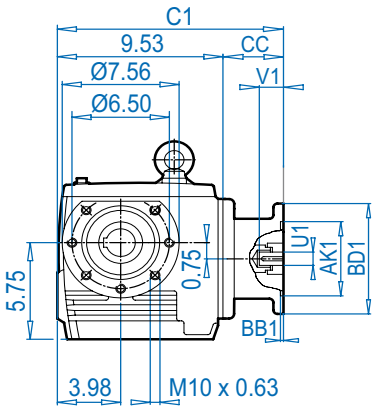

NEMA Input

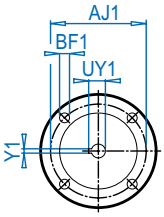

SK 12080AZ**D**

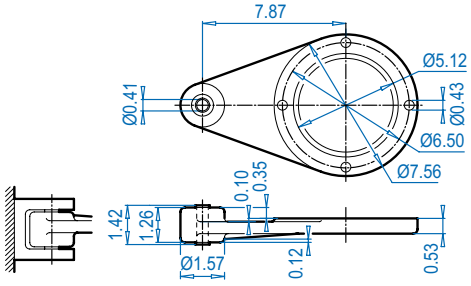

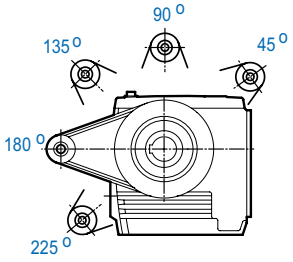

SK 12080AZ**SH**

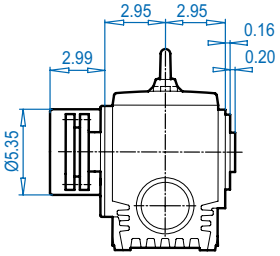

Dimensions in Inches
DIMENSIONS

SK 12080AZ

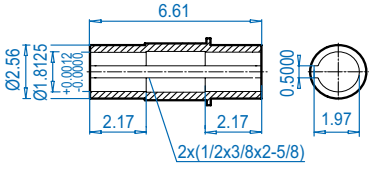

SK 12080AZ**B** ⇨🕮 672

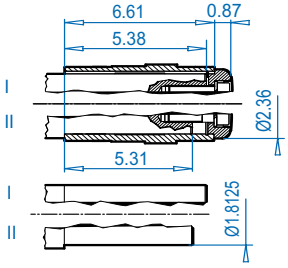

SK 12080AZ**S** ⇨🕮 671

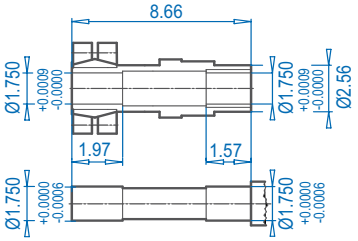

ALTERNATE SHAFTS SEE PAGES 669 - 671

NEMA Dimensions

Type	AJ1	AK1	BB1	BD1	BF1	U1	V1	UY1	Y1	C1	CC
56C	5.88	4.500	0.18	6.54	0.43	0.625	2.06	0.71	0.188	14.03	4.50
140TC	5.88	4.500	0.18	6.54	0.43	0.875	2.12	0.96	0.188	14.03	4.50
180TC	7.25	8.500	0.23	9.17	0.59	1.125	2.62	1.24	0.250	15.18	5.65

Send Quote Requests to info@automatedpt.com
Call +1(800)985-6929 To Order or Order Online At Nordgearmotors.com

SK 13080 + Motor



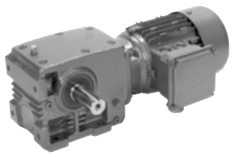

SK 13080

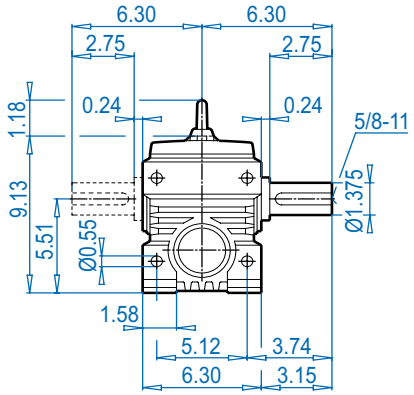

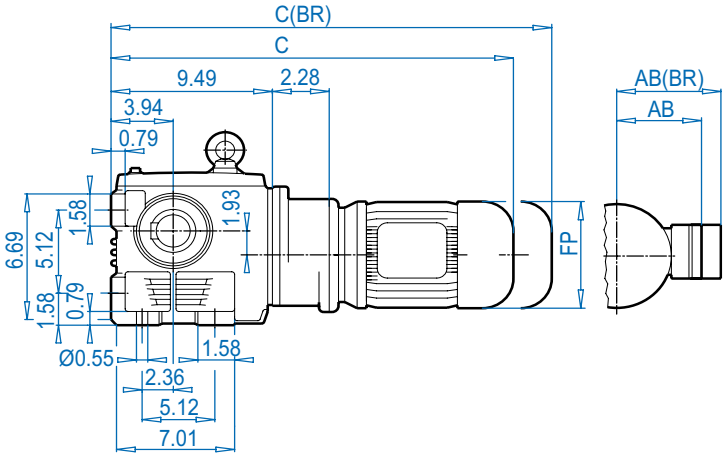

SK 13080VF

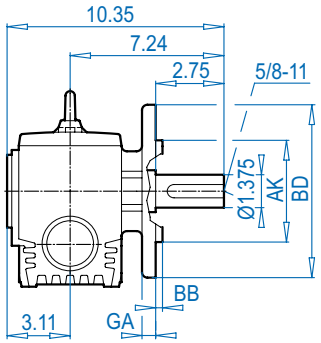

SK 13080AF

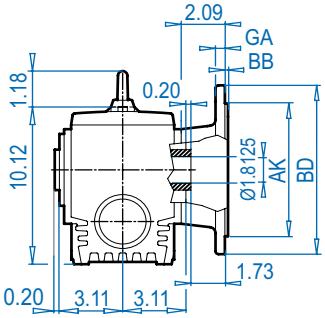

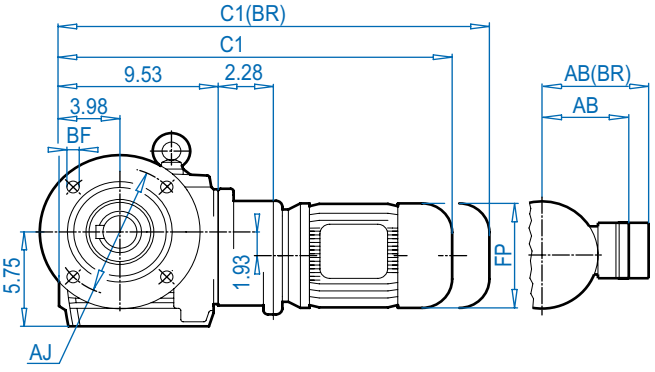

DIMENSIONS
Dimensions in Inches

SK 13080V

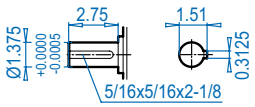

SK 13080AF

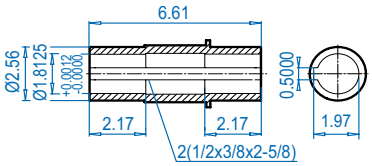

SK 13080AF**B** ⇨🕮 672

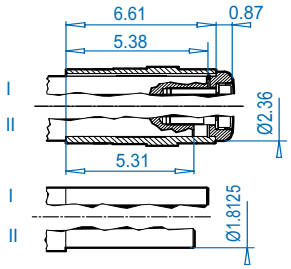

Mounting flange

Type	BD (mm)	AJ	AK	BB	BF	GA
SK 13080VF	7.87 (200)	6.50	5.118 + 0.0005 - 0.0004	0.16	0.43	0.47
SK 13080AF	9.84 (250)	8.46	7.087 + 0.0006 - 0.0005	0.16	0.55	0.59
SK 13080AF	11.81 (300)	10.43	9.055 + 0.0000 - 0.0014	0.16	0.55	0.79

Motor dimensions

Standard efficiency	63S/L	71S/L					For Other Connection Possibilities please see ⇨🕮 666 & 667
Energy efficiency							
AB	4.53	4.88					
AB (BR)	4.84	5.24					
C1	19.53	18.82					
C1 (BR)	21.10	23.39					
C	19.49	21.06					
C (BR)	21.70	23.35					
FP	5.12	5.71					

(BR) denotes Brakemotor

ALTERNATE SHAFTS SEE PAGES 669 - 671

Send Quote Requests to info@automatedpt.com
Call +1(800)985-6929 To Order or Order Online At Nordgearmotors.com

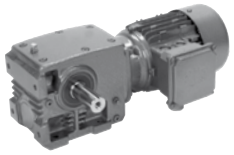

SK 13080 + Motor

SK 13080AZ

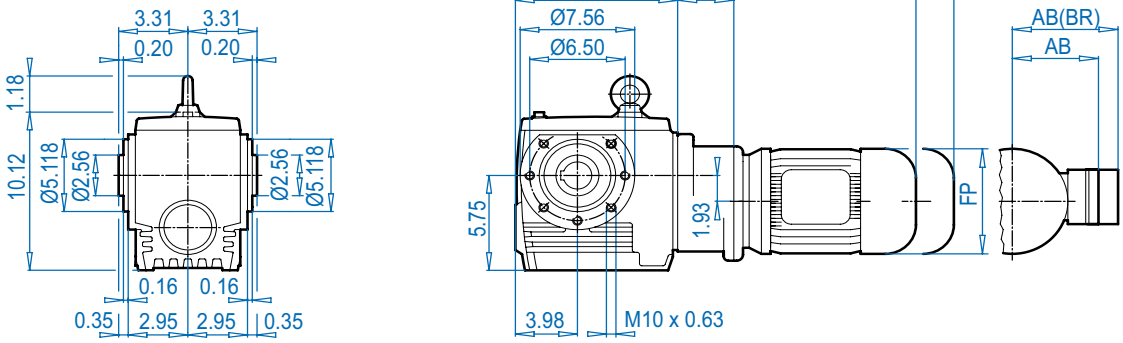

SK 13080AZ**D**

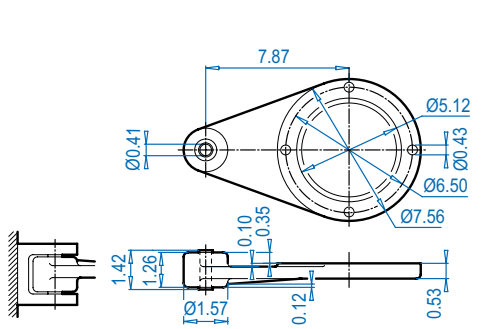

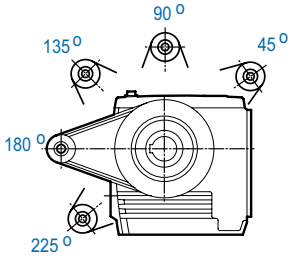

SK 13080AZ**SH**

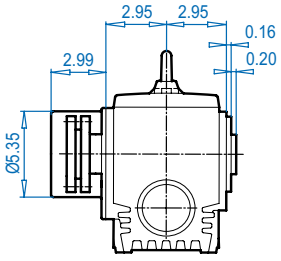

Dimensions in Inches
DIMENSIONS

SK 13080AZ

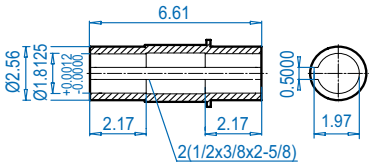

SK 13080AZ**B** ⇨🕮 672

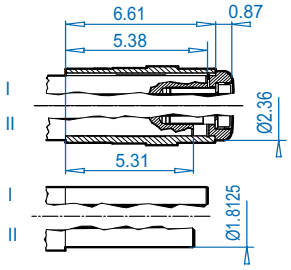

SK 13080AZ**S** ⇨🕮 671

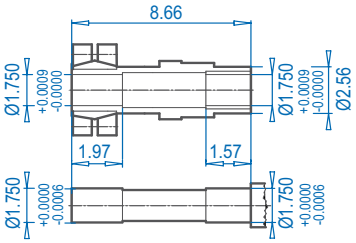

ALTERNATE SHAFTS SEE PAGES 669 - 671

Motor dimensions

Standard efficiency	63S/L	71S/L					For Other Connection Possibilities please see ⇨🕮 666 & 667
Energy efficiency							
AB	4.53	4.88					
AB (BR)	4.84	5.24					
C1	19.53	18.82					
C1 (BR)	21.10	23.39					
FP	5.12	5.71					

(BR) denotes Brakemotor

Send Quote Requests to info@automatedpt.com
Call +1(800)985-6929 To Order or Order Online At Nordgearmotors.com

SK 13080 + NEMA





SK 13080

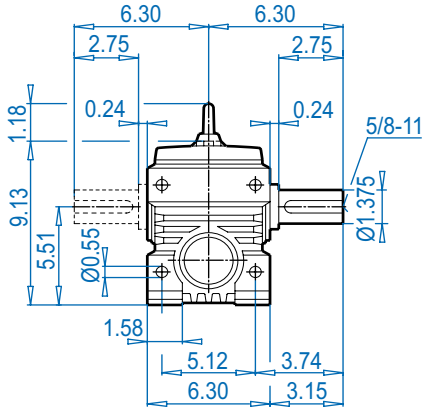

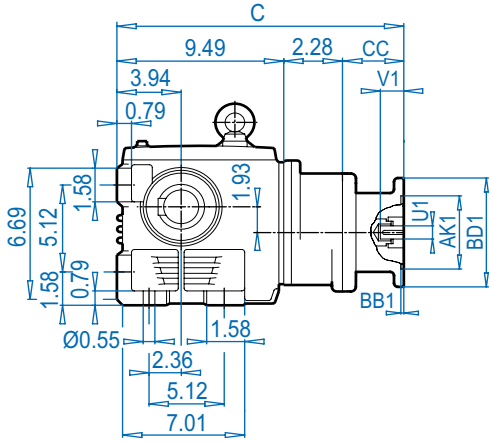

NEMA Input

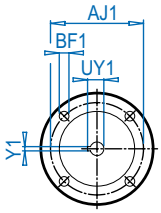

SK 13080VF

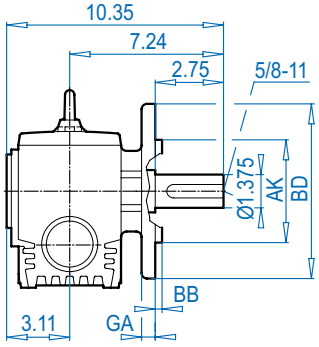

SK 13080AF

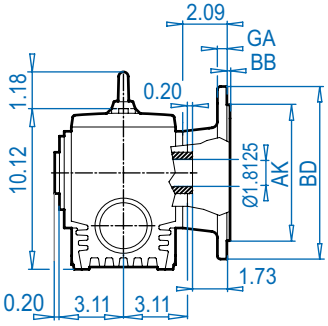

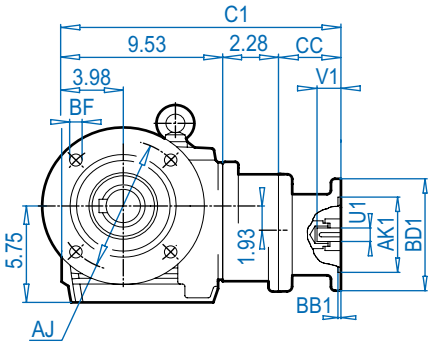

SK 13080V

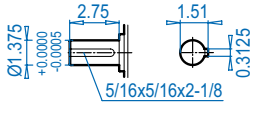

SK 13080AF

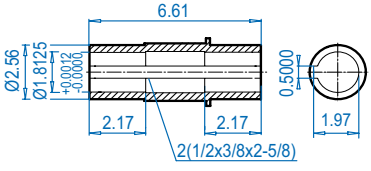

SK 13080AFB ⇨🕮 672

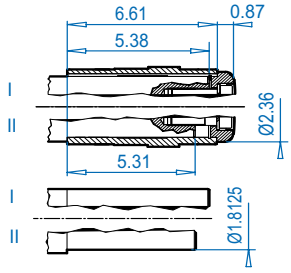

Mounting flange

Type	BD (mm)	AJ	AK	BB	BF	GA
SK 13080VF	7.87 (200)	6.50	5.118 $^{+0.0005}_{-0.0004}$	0.16	0.43	0.47
SK 13080AF	9.84 (250)	8.46	7.087 $^{+0.0006}_{-0.0005}$	0.16	0.55	0.59
SK 13080AF	11.81 (300)	10.43	9.055 $^{+0.0000}_{-0.0014}$	0.16	0.55	0.79

NEMA Dimensions

Type	AJ1	AK1	BB1	BD1	BF1	U1	V1	UY1	Y1	C	C1	CC
56C	5.88	4.500	0.18	6.54	0.43	0.625	2.06	0.71	0.188	16.27	16.31	4.50

DIMENSIONS
Dimensions in Inches
ALTERNATE SHAFTS SEE PAGES 669 - 671

Send Quote Requests to info@automatedpt.com
Call +1(800)985-6929 To Order or Order Online At Nordgearmotors.com

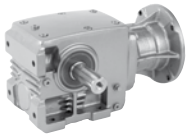


SK 13080 + NEMA

SK 13080AZ

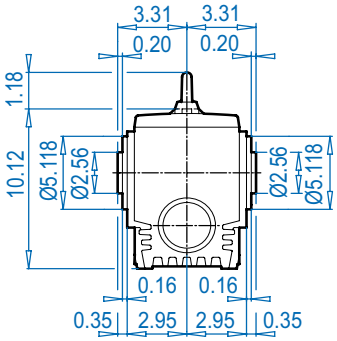

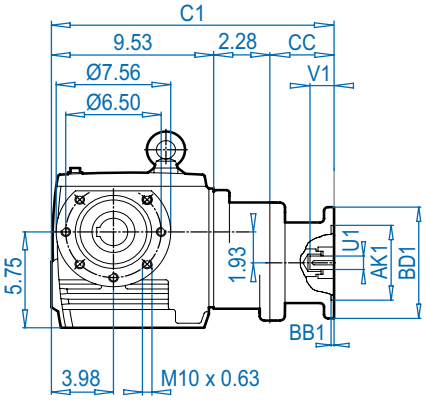

NEMA Input

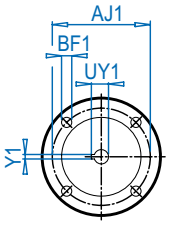

SK 13080AZ**D**

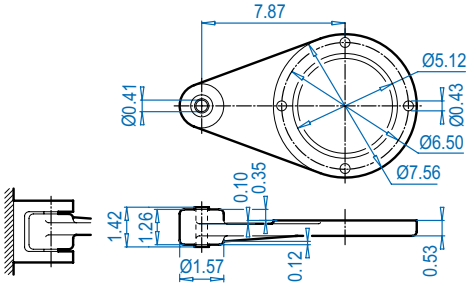

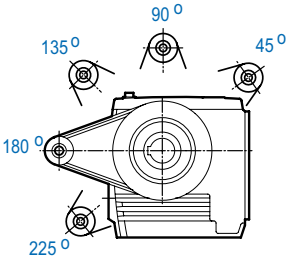

SK 13080AZ**SH**

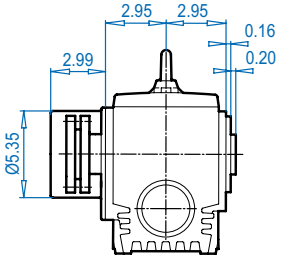

Dimensions in Inches
DIMENSIONS

ALTERNATE SHAFTS SEE PAGES 669 - 671

SK 13080AZ

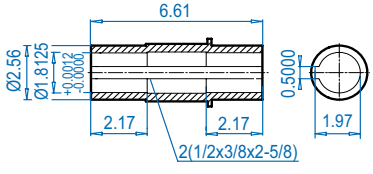

SK 13080AZ**B** ⇨🕮 672

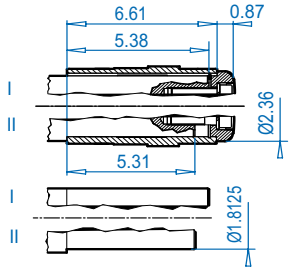

SK 13080AZ**S** ⇨🕮 671

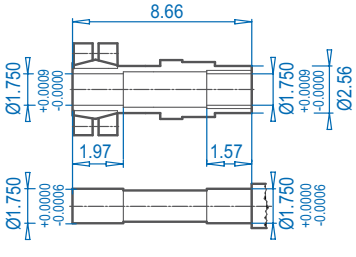

NEMA Dimensions

Type	AJ1	AK1	BB1	BD1	BF1	U1	V1	UY1	Y1	C1	CC
56C	5.88	4.500	0.18	6.54	0.43	0.625	2.06	0.71	0.188	16.31	4.50

Send Quote Requests to info@automatedpt.com
Call +1(800)985-6929 To Order or Order Online At Nordgearmotors.com

SK 32100 + Motor



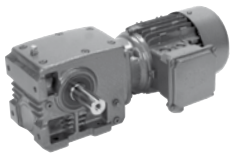

SK 32100

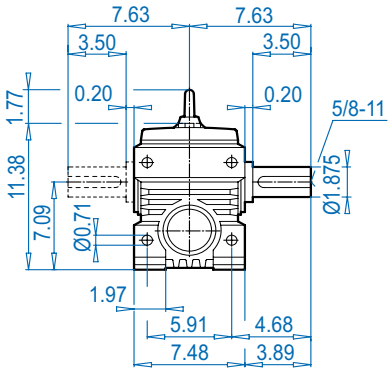

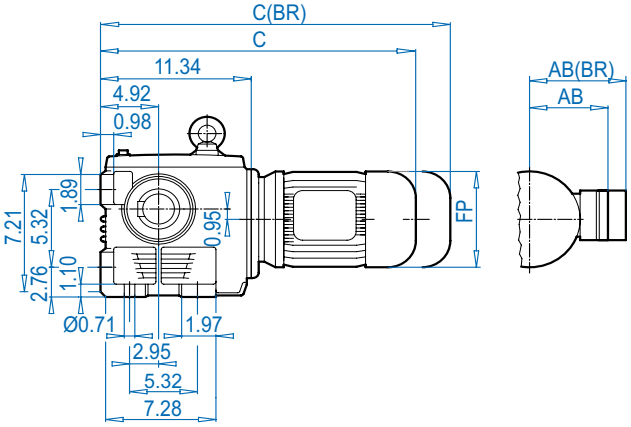

SK 32100VF

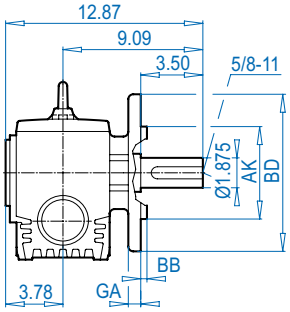

SK 32100AF

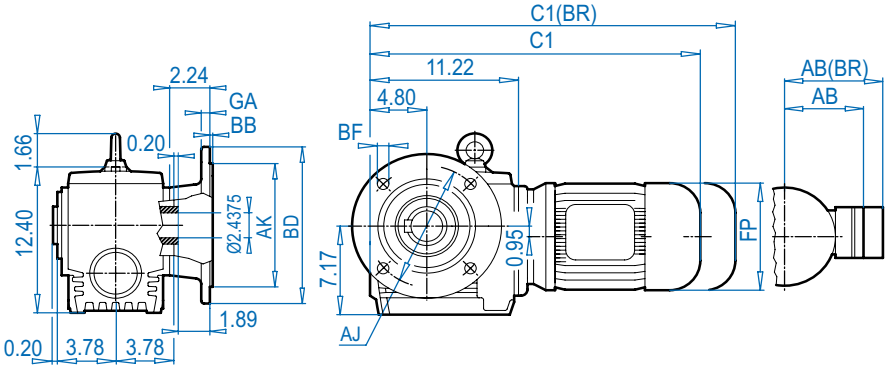

SK 32100V

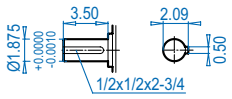

SK 32100AF

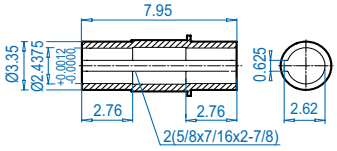

SK 32100AFB

⇨🕮 672

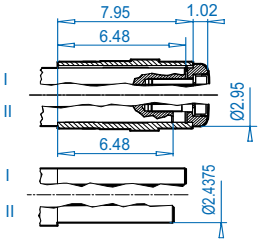

Mounting flange

Type	BD (mm)	AJ	AK	BB	BF	GA
SK 32100VF	9.84 (250)	8.47	7.087 + 0.0006 - 0.0005	0.16	0.55	0.63
SK 32100AF	13.78 (350)	11.81	9.842 + 0.0000 - 0.0011	0.20	0.71	0.79

Motor dimensions

Standard efficiency	71S/L	80S/L	90S/L	100L		132S/M	For Other Connection Possibilities please see ⇨🕮 666 & 667
Energy efficiency		80LH	90SH/LH	100LH	112MH	132SH/MH	
AB	4.88	5.59	5.79	6.65	7.05	8.03	
AB (BR)	5.24	5.63	5.83	6.26	6.69	7.72	
C1	20.28	21.26	22.87	24.06	24.96	28.35	
C1 (BR)	22.56	23.78	25.83	27.64	28.62	32.56	
C	20.39	21.38	22.99	24.17	25.08	28.46	
C (BR)	22.68	23.90	25.95	27.76	28.74	32.68	
FP	5.71	6.50	7.20	7.91	8.98	10.47	

(BR) denotes Brakemotor

Send Quote Requests to info@automatedpt.com
Call +1(800)985-6929 To Order or Order Online At Nordgearmotors.com

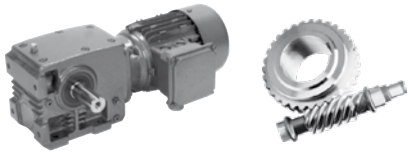

SK 32100 + Motor

SK 32100AZ

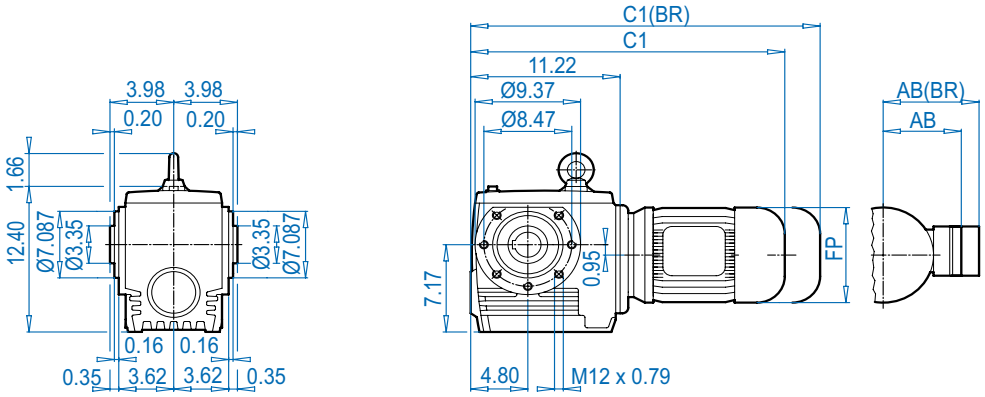

SK 32100AZ**D**

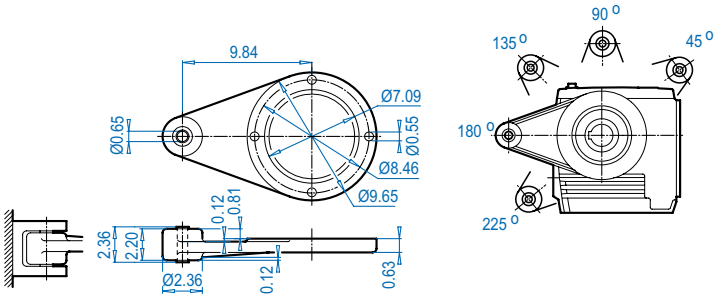

SK 32100AZ**SH**

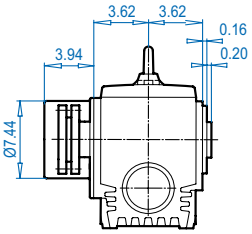

Dimensions in Inches
DIMENSIONS

SK 32100AZ

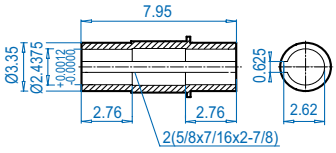

SK 32100AZ**B** ⇨🕮 672

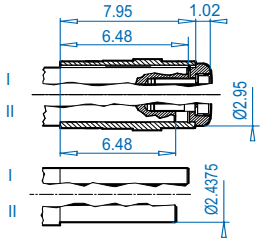

SK 32100AZ**S** ⇨🕮 671

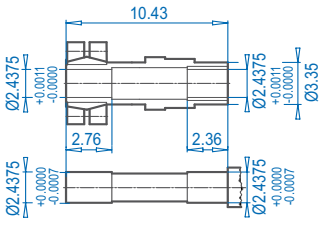

ALTERNATE SHAFTS SEE PAGES 669 - 671

Motor dimensions

Standard efficiency	71S/L	80S/L	90S/L	100L		132S/M	For Other Connection Possibilities please see ⇨🕮 666 & 667
Energy efficiency		80LH	90SH/LH	100LH	112MH	132SH/MH	
AB	4.88	5.59	5.79	6.65	7.05	8.03	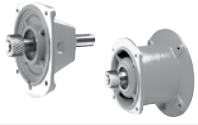
AB (BR)	5.24	5.63	5.83	6.26	6.69	7.72	
C1	20.28	21.26	22.87	24.06	24.96	28.35	
C1 (BR)	22.56	23.78	25.83	27.64	28.62	32.56	
FP	5.71	6.50	7.20	7.91	8.98	10.47	

(BR) denotes Brakemotor

Send Quote Requests to info@automatedpt.com
Call +1(800)985-6929 To Order or Order Online At Nordgearmotors.com

SK 32100 + NEMA





SK 32100

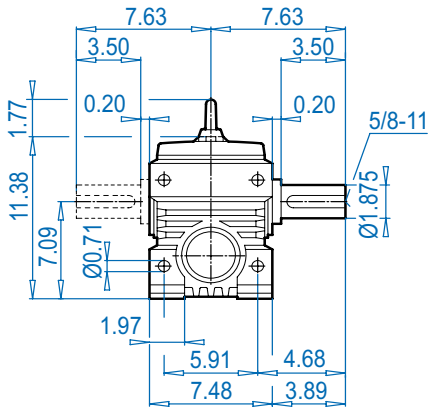

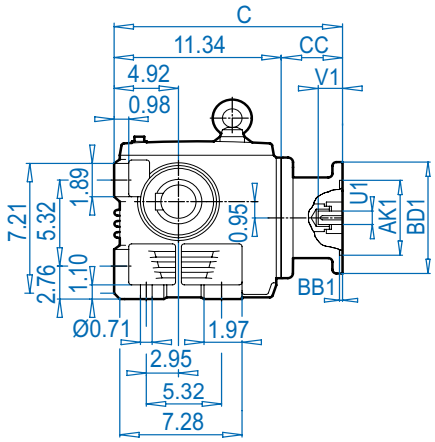

NEMA Input

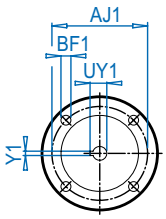

DIMENSIONS

Dimensions in Inches

SK 32100VF

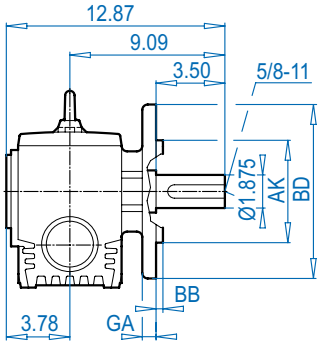

SK 32100AF

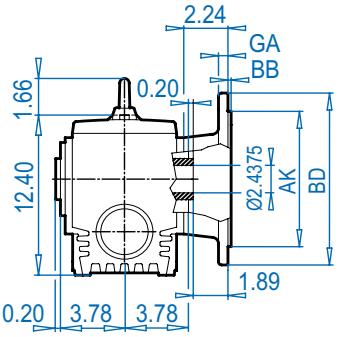

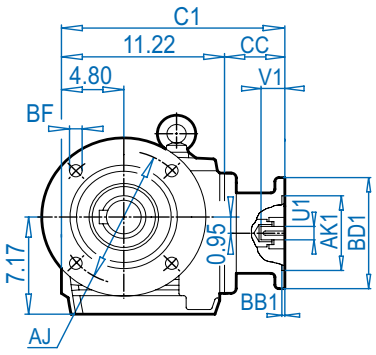

SK 32100V

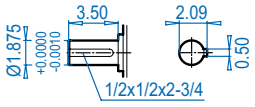

SK 32100AF

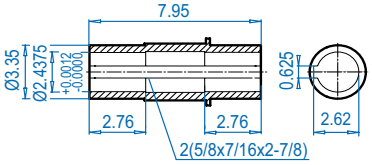

SK 32100AFB ⇨🕮 672

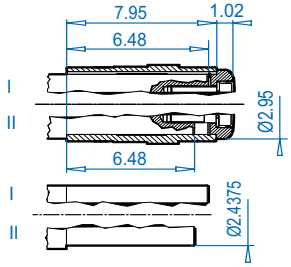

Mounting flange

Type	BD (mm)	AJ	AK	BB	BF	GA
SK 32100VF	9.84 (250)	8.47	7.087 +0.0006 -0.0005	0.16	0.55	0.63
SK 32100AF	13.78 (350)	11.81	9.842 +0.0000 -0.0011	0.20	0.71	0.79

NEMA Dimensions

Type	AJ1	AK1	BB1	BD1	BF1	U1	V1	UY1	Y1	C	C1	CC
56C	5.88	4.500	0.18	6.54	0.43	0.625	2.06	0.71	0.188	15.94	15.82	4.60
140TC	5.88	4.500	0.18	6.54	0.43	0.875	2.12	0.96	0.188	15.94	15.82	4.60
180TC	7.25	8.500	0.23	9.17	0.59	1.125	2.62	1.24	0.250	17.94	17.82	6.60
210TC	7.25	8.500	0.23	9.17	0.59	1.375	3.12	1.52	0.312	17.94	17.82	6.60

ALTERNATE SHAFTS SEE PAGES 669 - 671

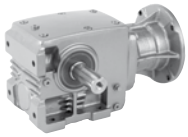


SK 32100 + NEMA

SK 32100AZ

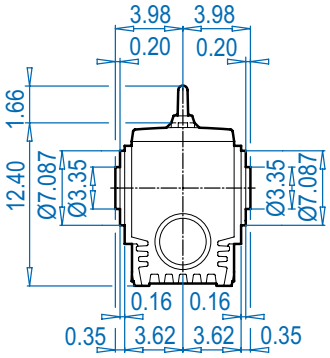

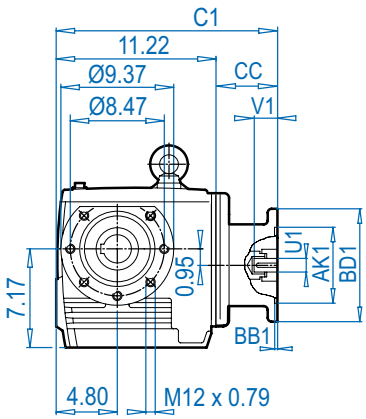

NEMA Input

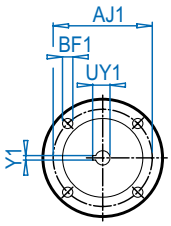

SK 32100AZ**D**

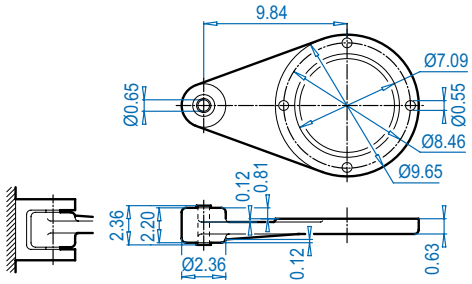

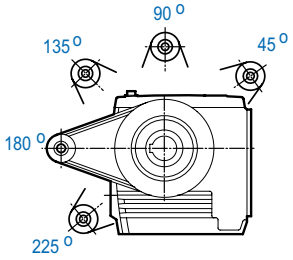

SK 32100AZ**SH**

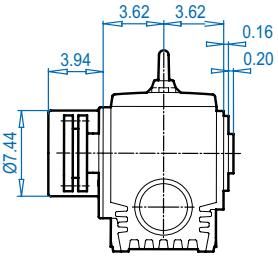

Dimensions in Inches
DIMENSIONS

SK 32100AZ

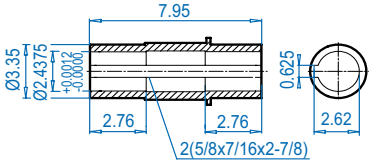

SK 32100AZ**B** ⇨🕮 672

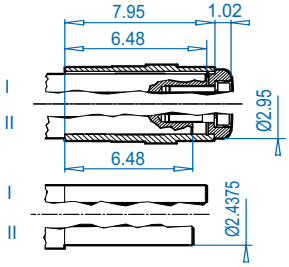

SK 32100AZ**S** ⇨🕮 671

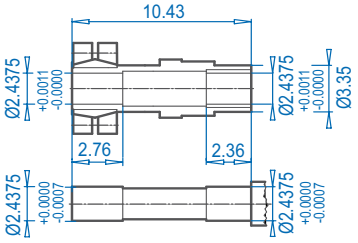

ALTERNATE SHAFTS SEE PAGES 669 - 671

NEMA Dimensions

Type	AJ1	AK1	BB1	BD1	BF1	U1	V1	UY1	Y1	C1	CC
56C	5.88	4.500	0.18	6.54	0.43	0.625	2.06	0.71	0.188	15.82	4.60
140TC	5.88	4.500	0.18	6.54	0.43	0.875	2.12	0.96	0.188	15.82	4.60
180TC	7.25	8.500	0.23	9.17	0.59	1.125	2.62	1.24	0.250	17.82	6.60
210TC	7.25	8.500	0.23	9.17	0.59	1.375	3.12	1.52	0.312	17.82	6.60

Send Quote Requests to info@automatedpt.com
Call +1(800)985-6929 To Order or Order Online At Nordgearmotors.com

SK 33100 + Motor



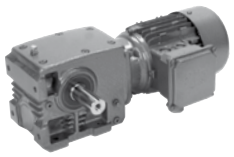

SK 33100

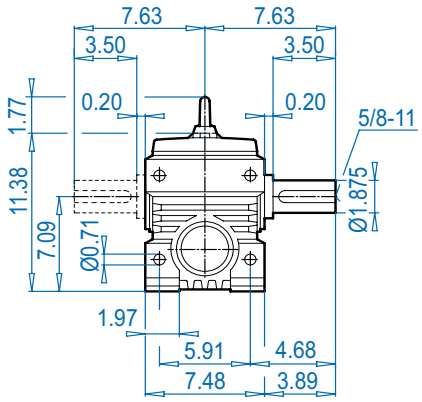

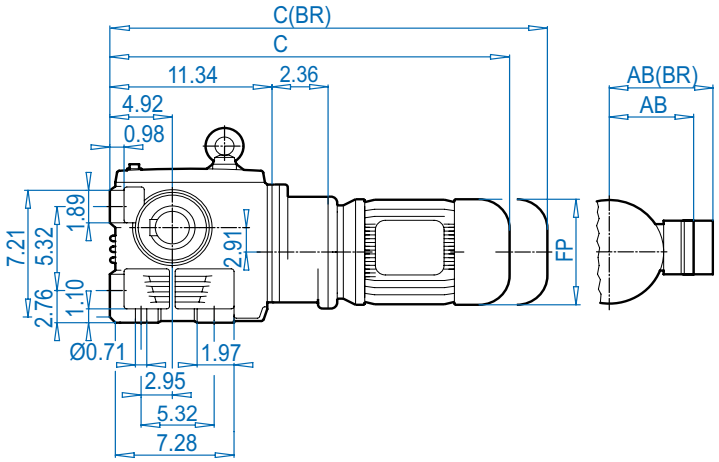

SK 33100VF

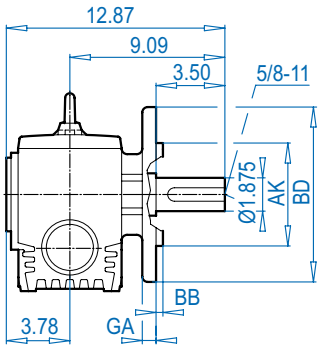

SK 33100AF

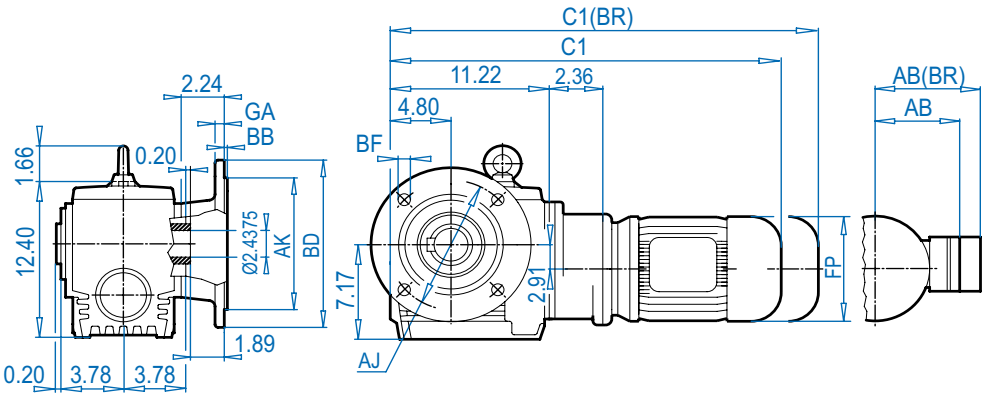

SK 33100V

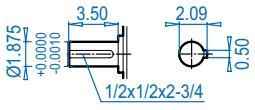

SK 33100AF

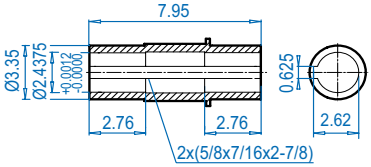

SK 33100AFB ⇨🕮 672

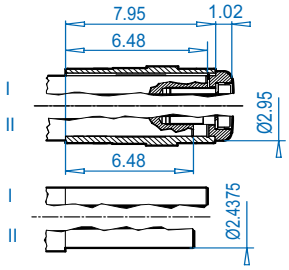

Mounting flange

Type	BD (mm)	AJ	AK	BB	BF	GA
SK 33100VF	9.84 (250)	8.47	7.087 + 0.0006 - 0.0005	0.16	0.55	0.63
SK 33100AF	13.78 (350)	11.81	9.842 + 0.0000 - 0.0011	0.20	0.71	0.79

Motor dimensions

Standard efficiency	63S/L	71S/L	80S/L	90S/L			For Other Connection Possibilities please see ⇨🕮 666 & 667
Energy efficiency			80LH	90SH/LH			
AB	4.53	4.88	5.59	5.79			
AB (BR)	4.84	5.24	5.63	5.83			
C1	21.34	22.91	23.90	25.51			
C1 (BR)	23.54	25.20	26.42	28.46			
C	21.46	23.03	24.02	25.63			
C (BR)	23.66	25.31	26.54	28.58			
FP	5.12	5.71	6.50	7.20			

(BR) denotes Brakemotor

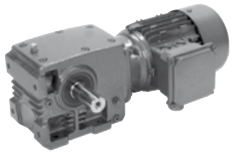

SK 33100 + Motor

SK 33100AZ

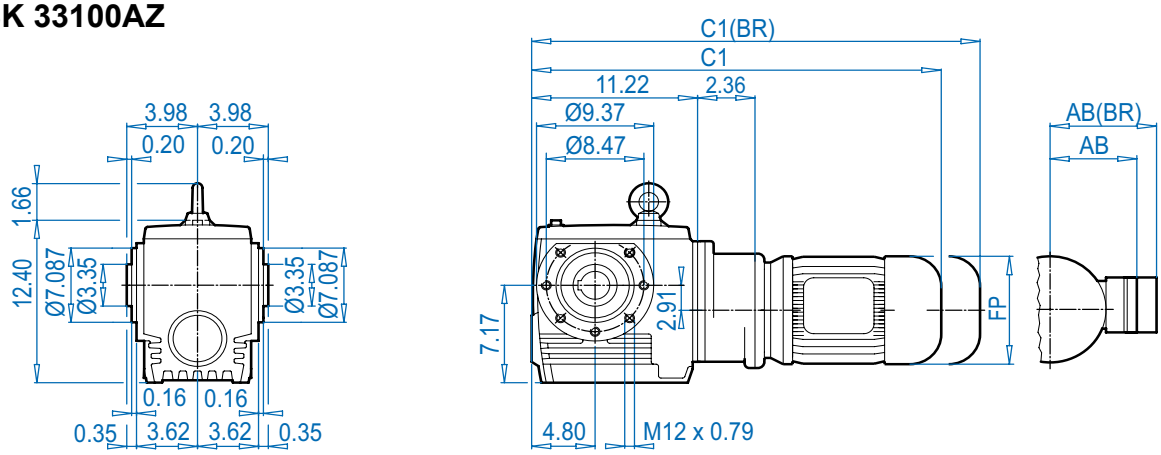

SK 33100AZ**D**

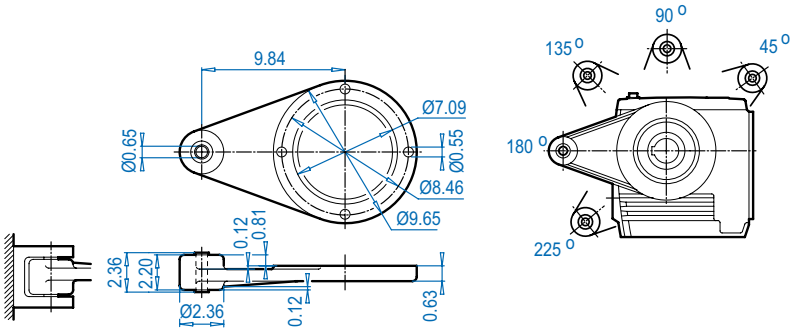

SK 33100AZ**SH**

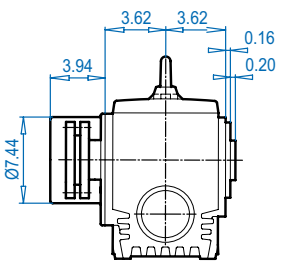

Dimensions in Inches
DIMENSIONS

SK 33100AZ

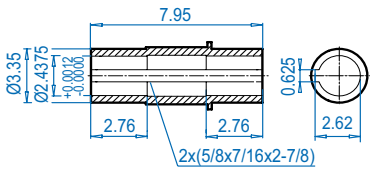

SK 33100AZ**B** ⇨📖 672

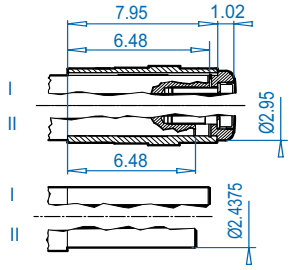

SK 33100AZ**S** ⇨📖 671

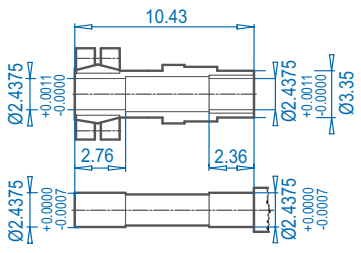

ALTERNATE SHAFTS SEE PAGES 669 - 671

Motor dimensions

Standard efficiency	63S/L	71S/L	80S/L	90S/L			For Other Connection Possibilities please see ⇨📖 666 & 667
Energy efficiency			80LH	90SH/LH			
AB	4.53	4.88	5.59	5.79			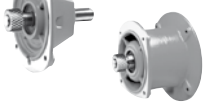
AB (BR)	4.84	5.24	5.63	5.83			
C1	21.34	22.91	23.90	25.51			
C1 (BR)	23.54	25.20	26.42	28.46			
FP	5.12	5.71	6.50	7.20			

(BR) denotes Brakemotor

Send Quote Requests to info@automatedpt.com
Call +1(800)985-6929 To Order or Order Online At Nordgearmotors.com

SK 33100 + NEMA





SK 33100

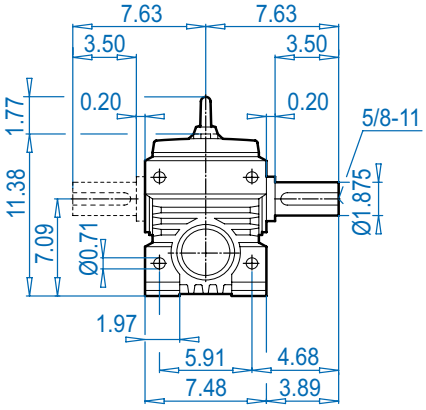

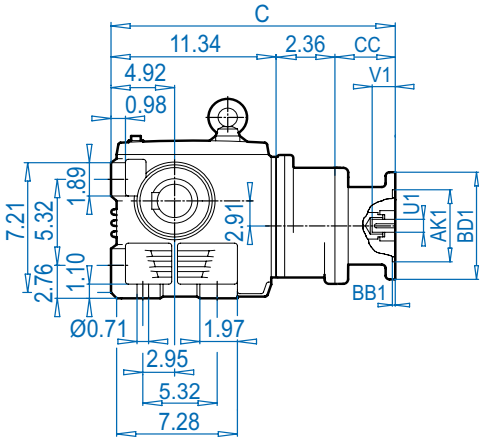

NEMA Input

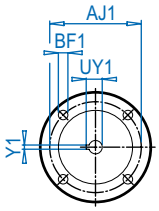

SK 33100VF

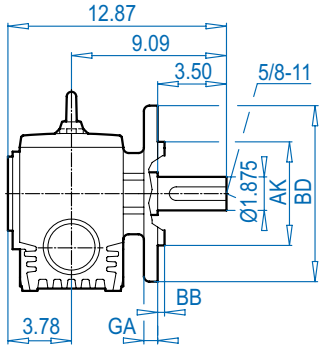

SK 33100AF

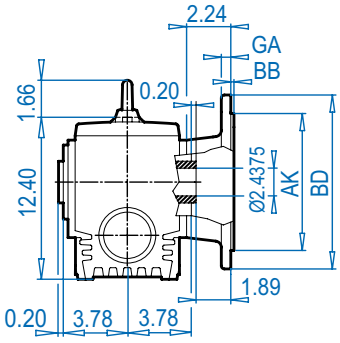

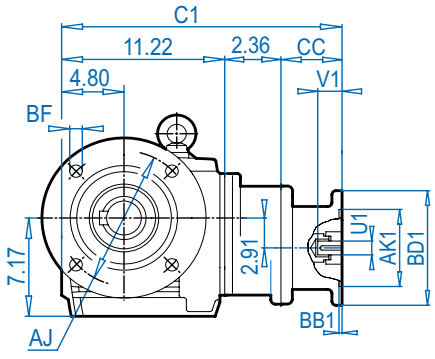

SK 33100V

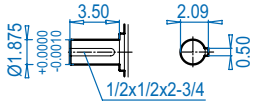

SK 33100AF

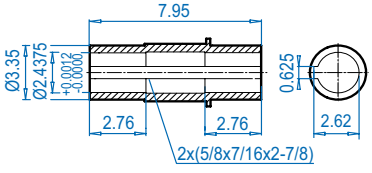

SK 33100AFB ⇨🕮 672

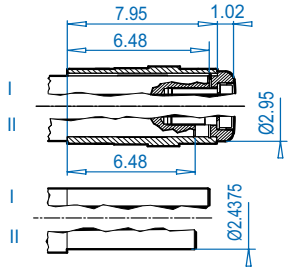

Mounting flange

Type	BD (mm)	AJ	AK	BB	BF	GA
SK 33100VF	9.84 (250)	8.47	7.087 + 0.0006 - 0.0005	0.16	0.55	0.63
SK 33100AF	13.78 (350)	11.81	9.842 + 0.0000 - 0.0011	0.20	0.71	0.79

NEMA Dimensions

Type	AJ1	AK1	BB1	BD1	BF1	U1	V1	UY1	Y1	C	C1	CC
56C	5.88	4.500	0.18	6.54	0.43	0.625	2.06	0.71	0.188	18.20	18.08	4.50
140TC	5.88	4.500	0.18	6.54	0.43	0.875	2.12	0.96	0.188	18.20	18.08	4.50

DIMENSIONS
Dimensions in Inches
ALTERNATE SHAFTS SEE PAGES 669 - 671

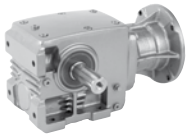


SK 33100 + NEMA

SK 33100AZ

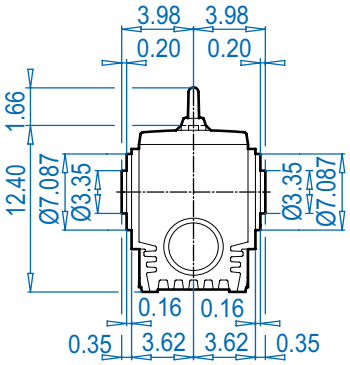

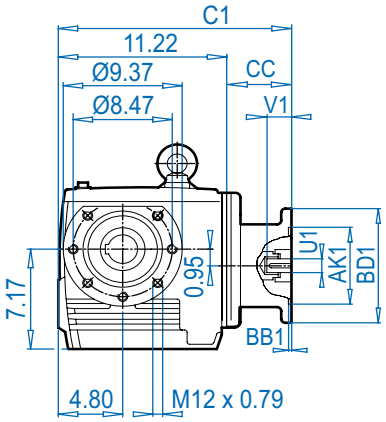

NEMA Input

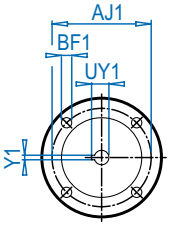

SK 33100AZ**D**

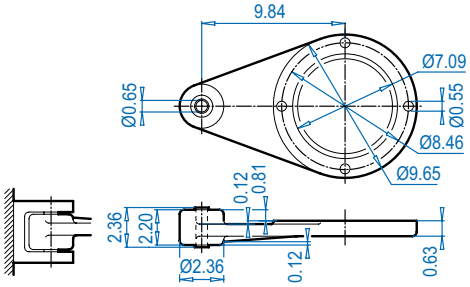

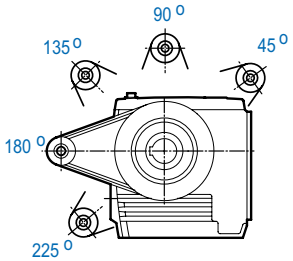

SK 33100AZ**SH**

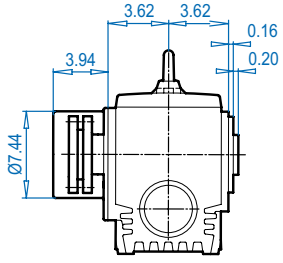

Dimensions in Inches
DIMENSIONS

ALTERNATE SHAFTS SEE PAGES 669 - 671

SK 33100AZ

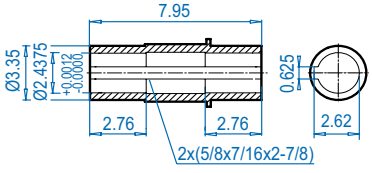

SK 33100AZ**B** ⇨🕮 672

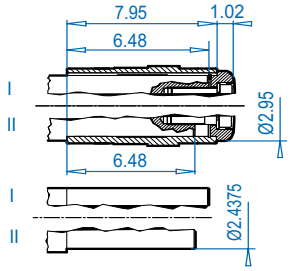

SK 33100AZ**S** ⇨🕮 671

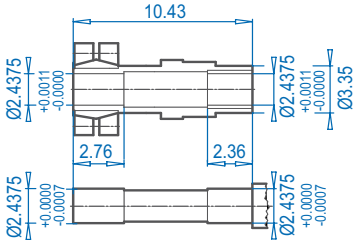

NEMA Dimensions

Type	AJ1	AK1	BB1	BD1	BF1	U1	V1	UY1	Y1	C1	CC
56C	5.88	4.500	0.18	6.54	0.43	0.625	2.06	0.71	0.188	18.08	4.50
140TC	5.88	4.500	0.18	6.54	0.43	0.875	2.12	0.96	0.188	18.08	4.50

Send Quote Requests to info@automatedpt.com
Call +1(800)985-6929 To Order or Order Online At Nordgearmotors.com

SK 42125 + Motor



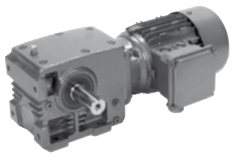

SK 42125

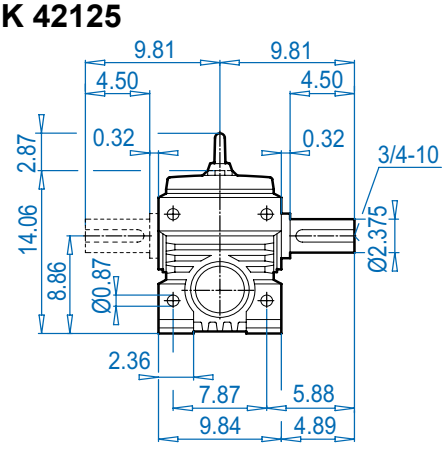

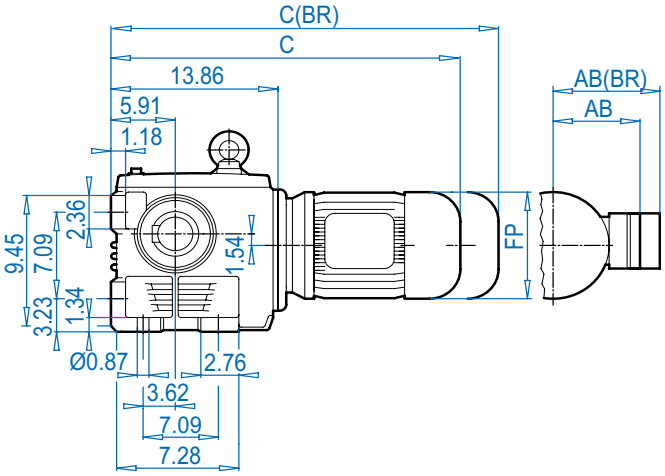

SK 42125VF

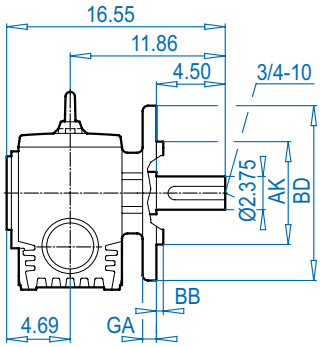

SK 42125AF

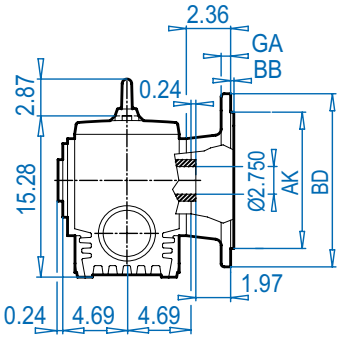

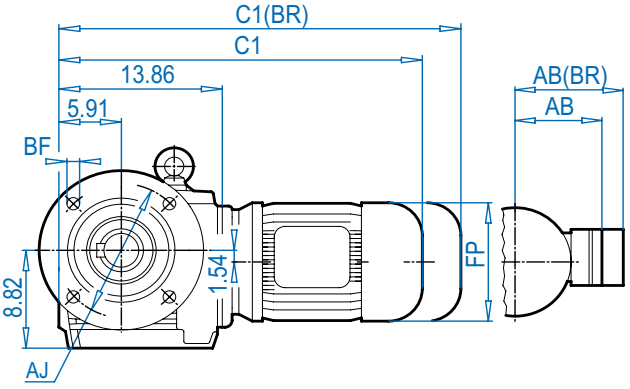

SK 42125V

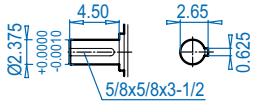

SK 42125AF

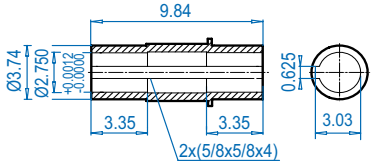

SK 42125AFB ⇨📖 672

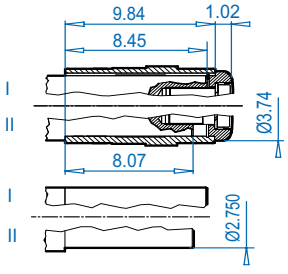

Mounting flange

Type	BD (mm)	AJ	AK	BB	BF	GA
SK 42125VF	13.78 (350)	11.81	9.843 +0.0000 -0.0011	0.20	0.71	0.79
SK 42125AF	15.75 (400)	13.78	11.811 +0.0000 -0.0013	0.20	0.71	0.79
SK 42125AF	17.72 (450)	15.75	13.779 +0.0000 -0.0014	0.20	0.71	0.87

Motor dimensions

Standard efficiency	90S/L	100L	112M	132S/M	160M/L		For Other Connection Possibilities please see ⇨📖 666 & 667
Energy efficiency	90SH/LH	100LH	112MH	132SH/MH	160MH	160LH	
AB	5.79	6.65	7.05	8.03	8.90	8.90	
AB (BR)	5.83	6.26	6.69	7.72	8.90	8.90	
C1	24.73	25.91	26.81	30.20	32.68	34.25	
C1 (BR)	27.68	29.49	30.47	34.41	39.26	40.99	
C	24.73	25.91	26.81	30.20	32.68	34.25	
C (BR)	27.68	29.49	30.47	34.41	39.26	40.99	
FP	7.20	7.91	8.98	10.47	12.60	12.60	

(BR) denotes Brakemotor

DIMENSIONS
Dimensions in Inches
ALTERNATE SHAFTS SEE PAGES 669 - 671

Send Quote Requests to info@automatedpt.com
Call +1(800)985-6929 To Order or Order Online At Nordgearmotors.com

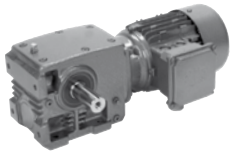

SK 42125 + Motor

SK 42125AZ

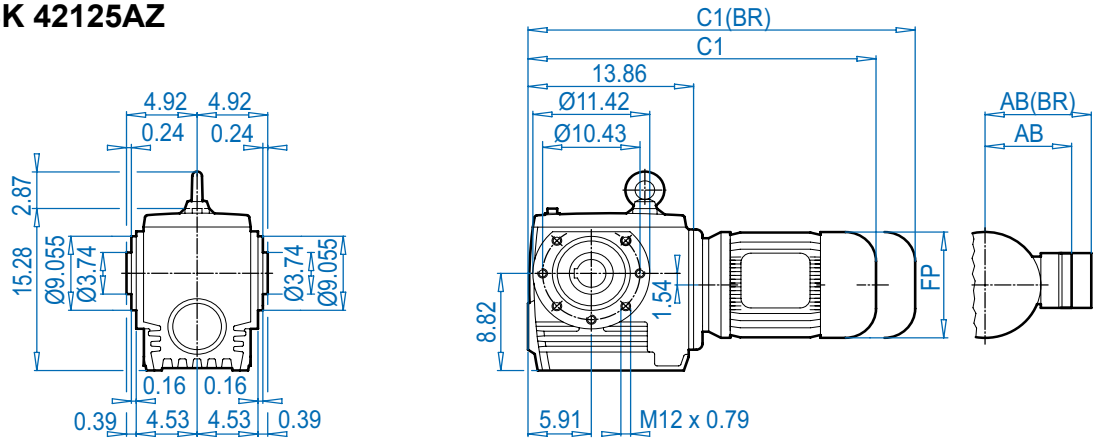

SK 42125AZ**D**

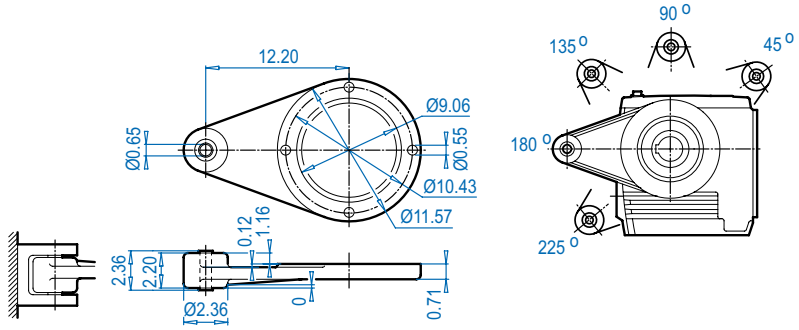

SK 42125AZ**SH**

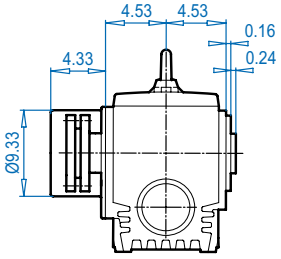

Dimensions in Inches
DIMENSIONS

SK 42125AZ

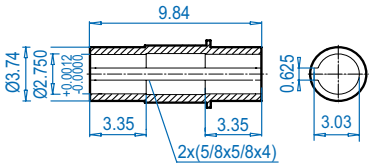

SK 42125AZ**B** ⇨📖 672

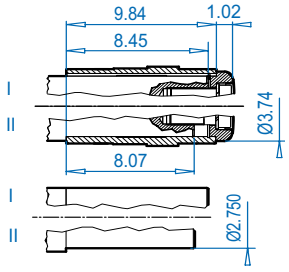

SK 42125AZ**S** ⇨📖 671

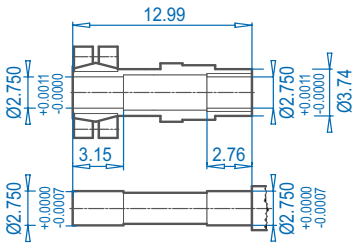

ALTERNATE SHAFTS SEE PAGES 669 - 671

Motor dimensions

Standard efficiency	90S/L	100L	112M	132S/M	160M/L		For Other Connection Possibilities please see ⇨📖 666 & 667
Energy efficiency	90SH/LH	100LH	112MH	132SH/MH	160MH	160LH	
AB	5.79	6.65	7.05	8.03	8.90	8.90	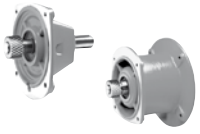
AB (BR)	5.83	6.26	6.69	7.72	8.90	8.90	
C1	24.73	25.91	26.81	30.20	32.68	34.25	
C1 (BR)	27.68	29.49	30.47	34.41	39.26	40.99	
FP	7.20	7.91	8.98	10.47	12.60	12.60	

(BR) denotes Brakemotor

Send Quote Requests to info@automatedpt.com
Call +1(800)985-6929 To Order or Order Online At Nordgearmotors.com

SK 42125 + NEMA





SK 42125

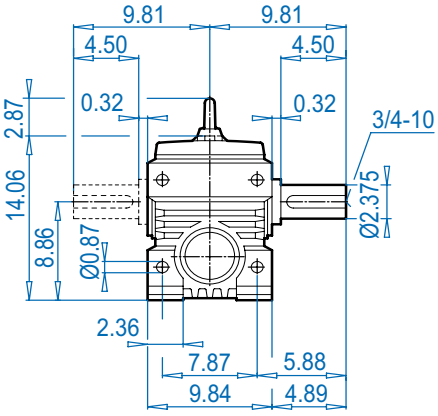

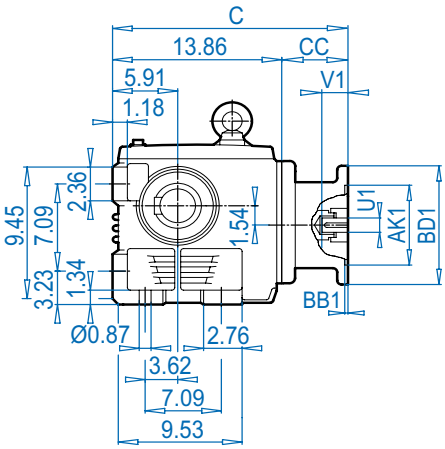

NEMA Input

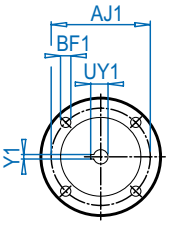

SK 42125VF

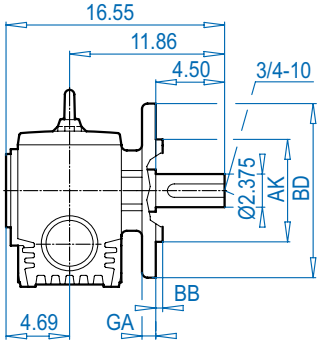

SK 42125AF

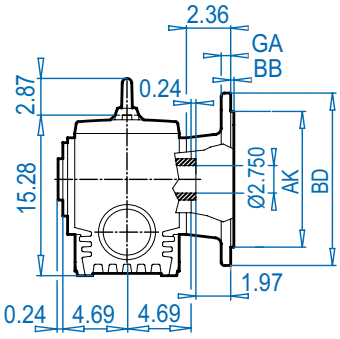

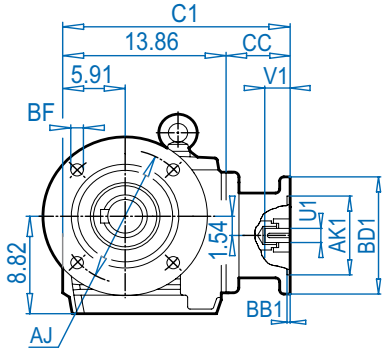

SK 42125V

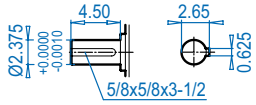

SK 42125AF

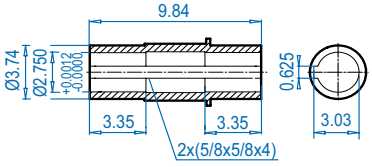

SK 42125AFB ⇨🕮 672

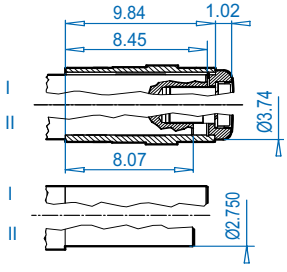

Mounting flange

Type	BD (mm)	AJ	AK	BB	BF	GA
SK 42125VF	13.78 (350)	11.81	9.843 + 0.0000 - 0.0011	0.20	0.71	0.79
SK 42125AF	15.75 (400)	13.78	11.811 + 0.0000 - 0.0013	0.20	0.71	0.79
SK 42125AF	17.72 (450)	15.75	13.779 + 0.0000 - 0.0014	0.20	0.71	0.87

NEMA Dimensions

Type	AJ1	AK1	BB1	BD1	BF1	U1	V1	UY1	Y1	C	C1	CC
56C	5.88	4.500	0.18	6.54	0.43	0.625	2.06	0.71	0.188	18.16	18.16	4.30
140TC	5.88	4.500	0.18	6.54	0.43	0.875	2.12	0.96	0.188	18.16	18.16	4.30
180TC	7.25	8.500	0.23	9.17	0.59	1.125	2.62	1.24	0.250	21.76	21.76	7.90
210TC	7.25	8.500	0.23	9.17	0.59	1.375	3.12	1.52	0.312	21.76	21.76	7.90
250TC	7.25	8.500	0.23	9.17	0.59	1.625	3.75	1.80	0.375	21.76	21.76	7.90

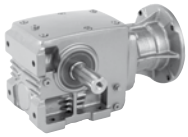


SK 42125 + NEMA

SK 42125AZ

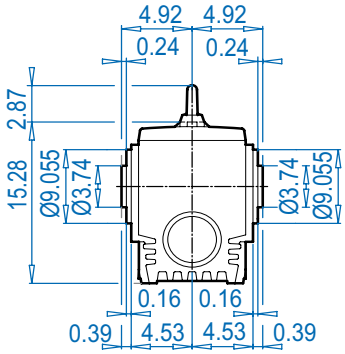

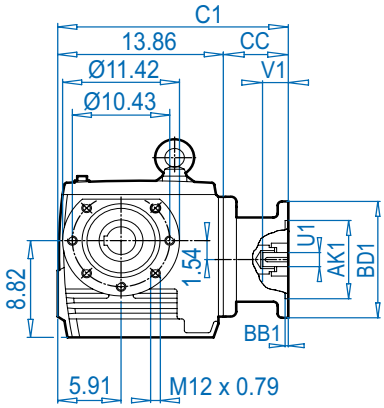

NEMA Input

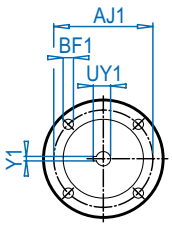

SK 42125AZ**D**

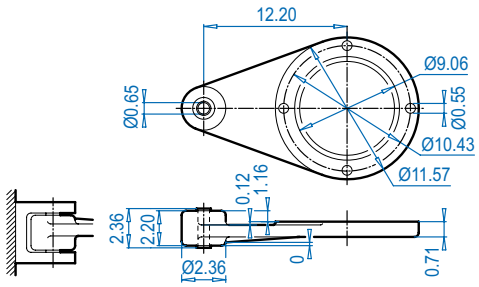

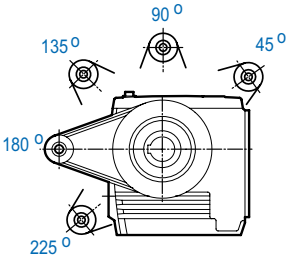

SK 42125AZ**SH**

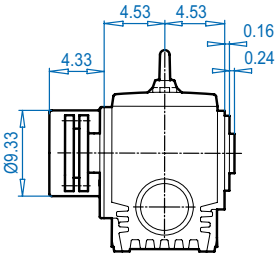

Dimensions in Inches
DIMENSIONS

SK 42125AZ

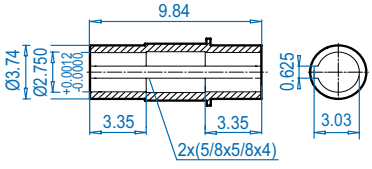

SK 42125AZ**B** ⇨🕮 672

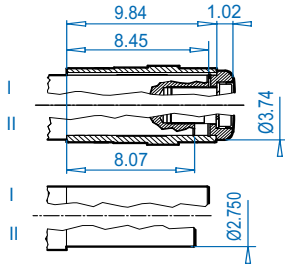

SK 42125AZ**S** ⇨🕮 671

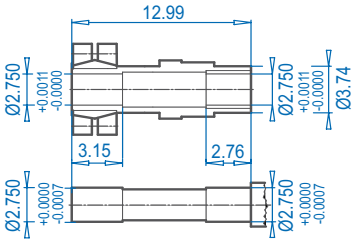

ALTERNATE SHAFTS SEE PAGES 669 - 671

NEMA Dimensions

Type	AJ1	AK1	BB1	BD1	BF1	U1	V1	UY1	Y1	C1	CC
56C	5.88	4.500	0.18	6.54	0.43	0.625	2.06	0.71	0.188	18.16	4.30
140TC	5.88	4.500	0.18	6.54	0.43	0.875	2.12	0.96	0.188	18.16	4.30
180TC	7.25	8.500	0.23	9.17	0.59	1.125	2.62	1.24	0.250	21.76	7.90
210TC	7.25	8.500	0.23	9.17	0.59	1.375	3.12	1.52	0.312	21.76	7.90
250TC	7.25	8.500	0.23	9.17	0.59	1.625	3.75	1.80	0.375	21.76	7.90

Send Quote Requests to info@automatedpt.com
Call +1(800)985-6929 To Order or Order Online At Nordgearmotors.com

SK 43125 + Motor

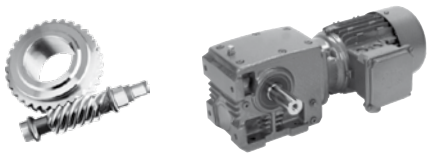

SK 43125

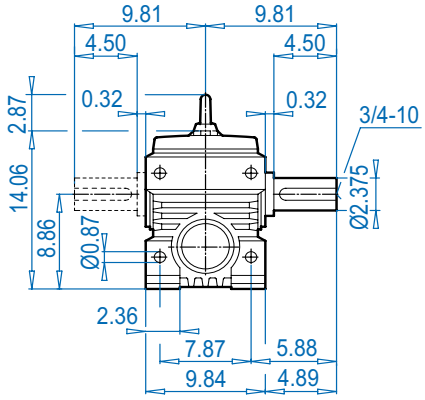

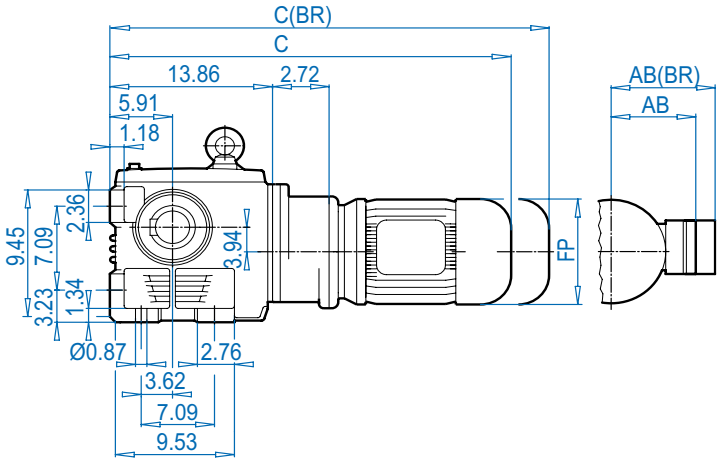

SK 43125VF

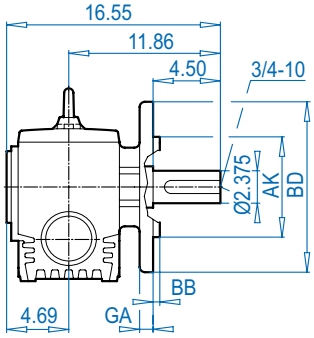

SK 43125AF

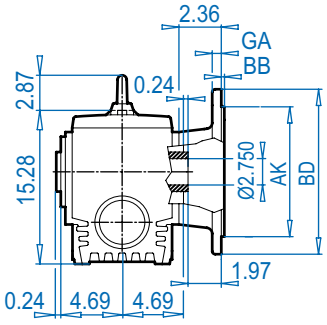

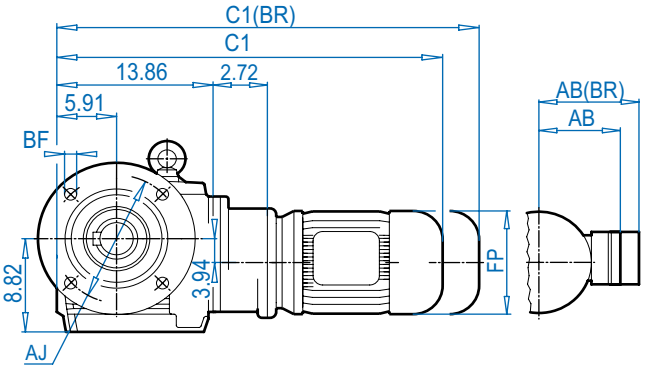

SK 43125V

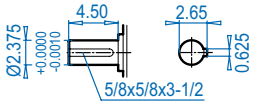

SK 43125AF

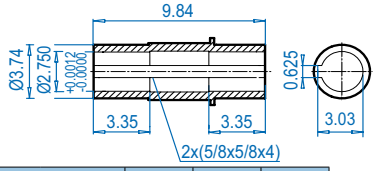

SK 43125AFB ⇨📖 672

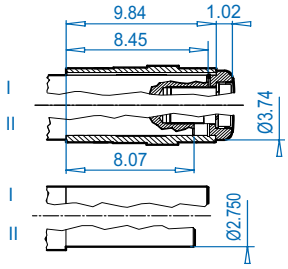

Mounting flange

Type	BD (mm)	AJ	AK	BB	BF	GA
SK 42125VF	13.78 (350)	11.81	9.843 + 0.0000 - 0.0011	0.20	0.71	0.79
SK 42125AF	15.75 (400)	13.78	11.811 + 0.0000 - 0.0013	0.20	0.71	0.79
SK 42125AF	17.72 (450)	15.75	13.779 + 0.0000 - 0.0014	0.20	0.71	0.87

Motor dimensions

Standard efficiency	71S/L	80S/L	90S/L	100L			For Other Connection Possibilities please see ⇨📖 666 & 667
Energy efficiency		80LH	90SH/LH	100LH			
AB	4.88	5.59	5.79	6.65			
AB (BR)	5.24	5.63	5.83	6.26			
C1	25.67	26.65	28.27	29.44			
C1 (BR)	27.95	29.17	31.22	33.03			
C	25.67	26.65	28.27	29.44			
C (BR)	27.95	29.17	31.22	33.03			
FP	5.71	6.50	7.20	7.91			

(BR) denotes Brakemotor

DIMENSIONS
Dimensions in Inches
ALTERNATE SHAFTS SEE PAGES 669 - 671

Send Quote Requests to info@automatedpt.com
Call +1(800)985-6929 To Order or Order Online At Nordgearmotors.com

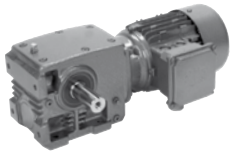

SK 43125 + Motor

SK 43125AZ

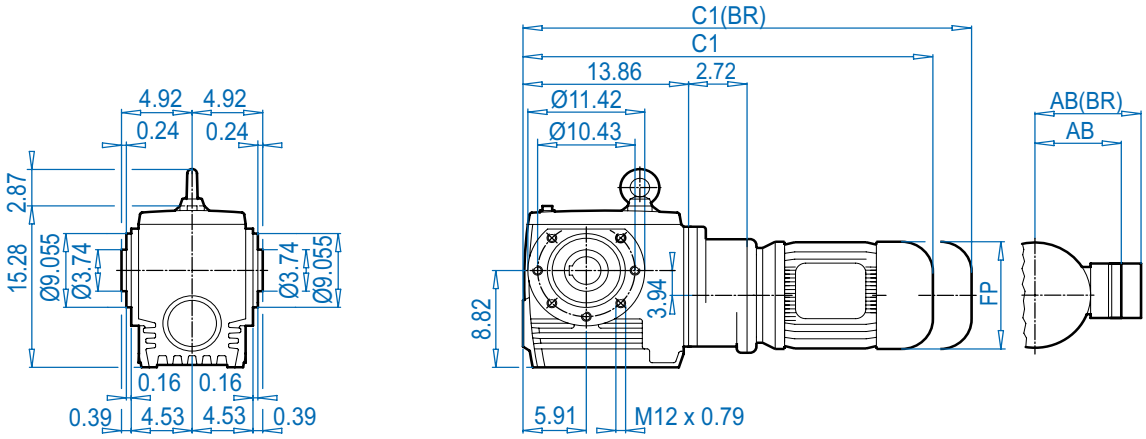

SK 43125AZ**D**

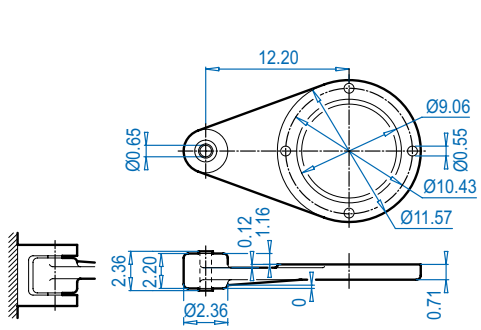

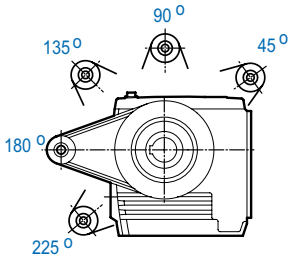

SK 43125AZ**SH**

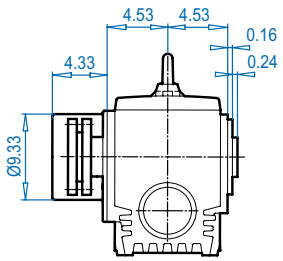

Dimensions in Inches
DIMENSIONS

SK 43125AZ

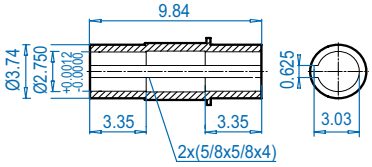

SK 43125AZ**B** ⇨🕮 672

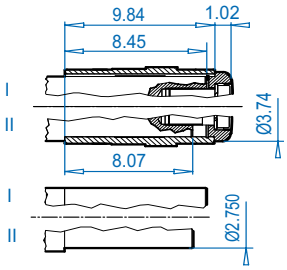

SK 43125AZ**S** ⇨🕮 671

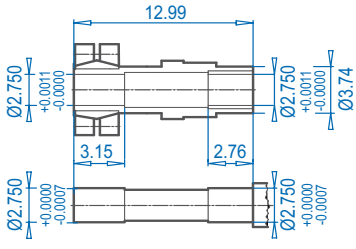

ALTERNATE SHAFTS SEE PAGES 669 - 671

Motor dimensions

Standard efficiency	71S/L	80S/L	90S/L	100L			For Other Connection Possibilities please see ⇨🕮 666 & 667
Energy efficiency		80LH	90SH/LH	100LH			
AB	4.88	5.59	5.79	6.65			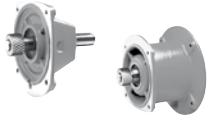
AB (BR)	5.24	5.63	5.83	6.26			
C1	25.67	26.65	28.27	29.44			
C1 (BR)	27.95	29.17	31.22	33.03			
FP	5.71	6.50	7.20	7.91			

(BR) denotes Brakemotor

Send Quote Requests to info@automatedpt.com
Call +1(800)985-6929 To Order or Order Online At Nordgearmotors.com

SK 43125 + NEMA





SK 43125

NEMA Input

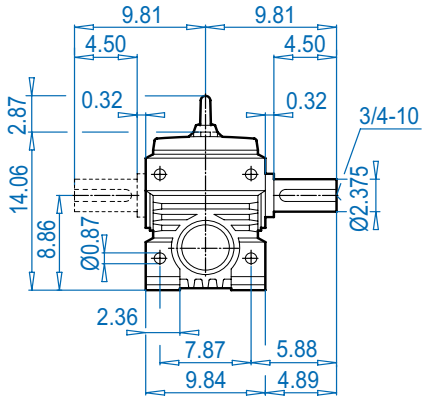

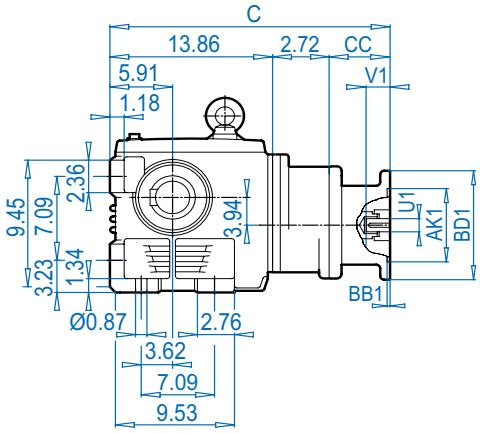

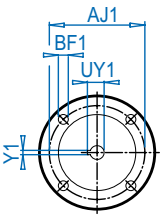

SK 43125VF

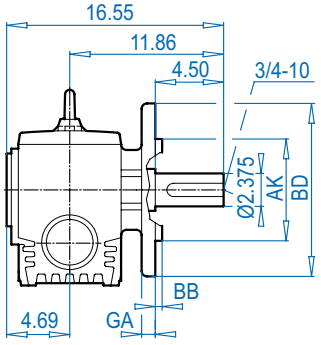

SK 43125AF

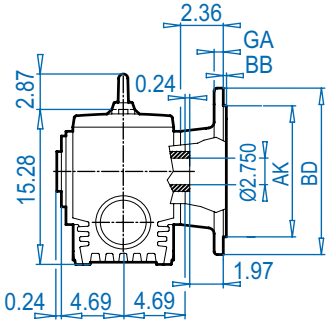

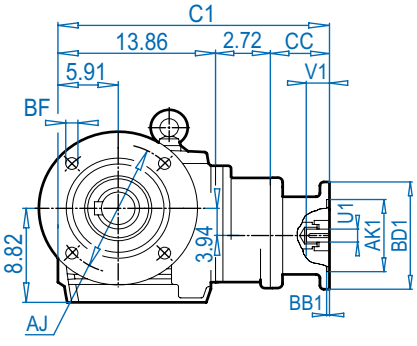

SK 43125V

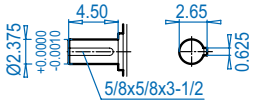

SK 43125AF

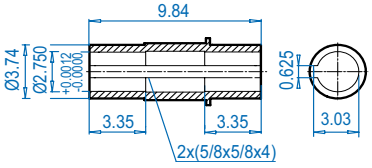

SK 43125AFB ⇨🕮 672

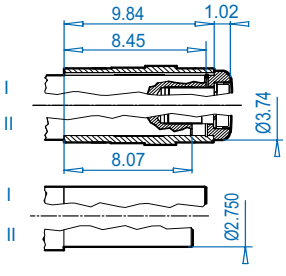

Mounting flange

Type	BD (mm)	AJ	AK	BB	BF	GA
SK 43125VF	13.78 (350)	11.81	9.843 $^{+0.0000}_{-0.0011}$	0.20	0.71	0.79
SK 43125AF	15.75 (400)	13.78	11.811 $^{+0.0000}_{-0.0013}$	0.20	0.71	0.79
SK 43125AF	17.72 (450)	15.75	13.779 $^{+0.0000}_{-0.0014}$	0.20	0.71	0.87

NEMA Dimensions

Type	AJ1	AK1	BB1	BD1	BF1	U1	V1	UY1	Y1	C	C1	CC
56C	5.88	4.500	0.18	6.54	0.43	0.625	2.06	0.71	0.188	21.18	21.18	4.60
140TC	5.88	4.500	0.18	6.54	0.43	0.875	2.12	0.96	0.188	21.18	21.18	4.60
180TC	7.25	8.500	0.23	9.17	0.59	1.125	2.62	1.24	0.250	23.18	23.18	6.60

DIMENSIONS
Dimensions in Inches
ALTERNATE SHAFTS SEE PAGES 669 - 671

Send Quote Requests to info@automatedpt.com
Call +1(800)985-6929 To Order or Order Online At Nordgearmotors.com

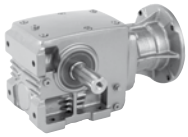


SK 43125 + NEMA

SK 43125AZ

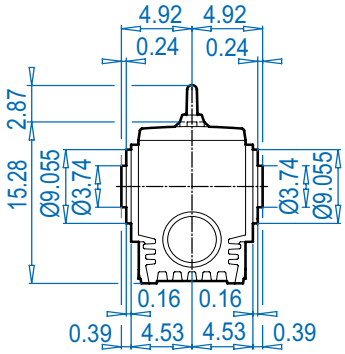

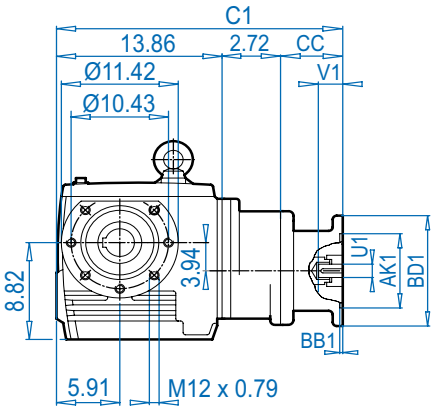

NEMA Input

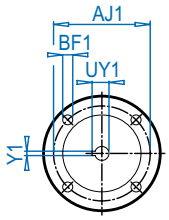

SK 43125AZ**D**

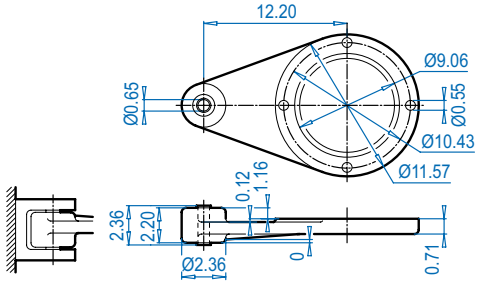

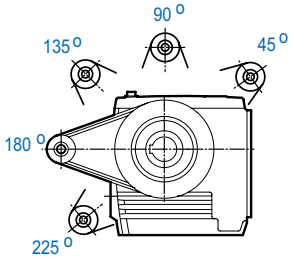

SK 43125AZ**SH**

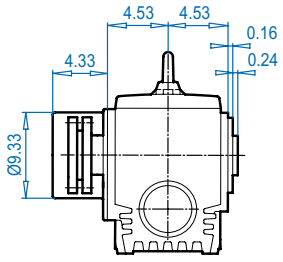

Dimensions in Inches
DIMENSIONS

SK 43125AZ

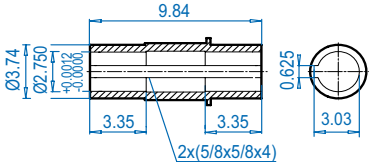

SK 43125AZ**B** ⇨🕮 672

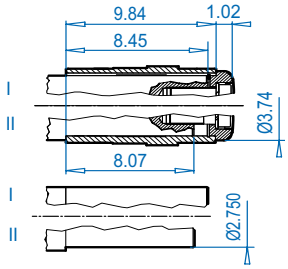

SK 43125AZ**S** ⇨🕮 671

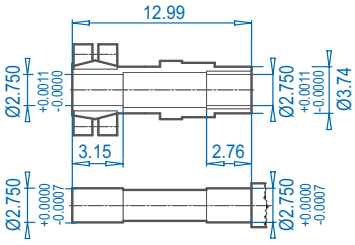

ALTERNATE SHAFTS SEE PAGES 669 - 671

NEMA Dimensions

Type	AJ1	AK1	BB1	BD1	BF1	U1	V1	UY1	Y1	C1	CC
56C	5.88	4.500	0.18	6.54	0.43	0.625	2.06	0.71	0.188	21.18	4.60
140TC	5.88	4.500	0.18	6.54	0.43	0.875	2.12	0.96	0.188	21.18	4.60
180TC	7.25	8.500	0.23	9.17	0.59	1.125	2.62	1.24	0.250	23.18	6.60

Send Quote Requests to info@automatedpt.com
Call +1(800)985-6929 To Order or Order Online At Nordgearmotors.com

Solid Input Shaft
Type - W





DRIVESYSTEMS

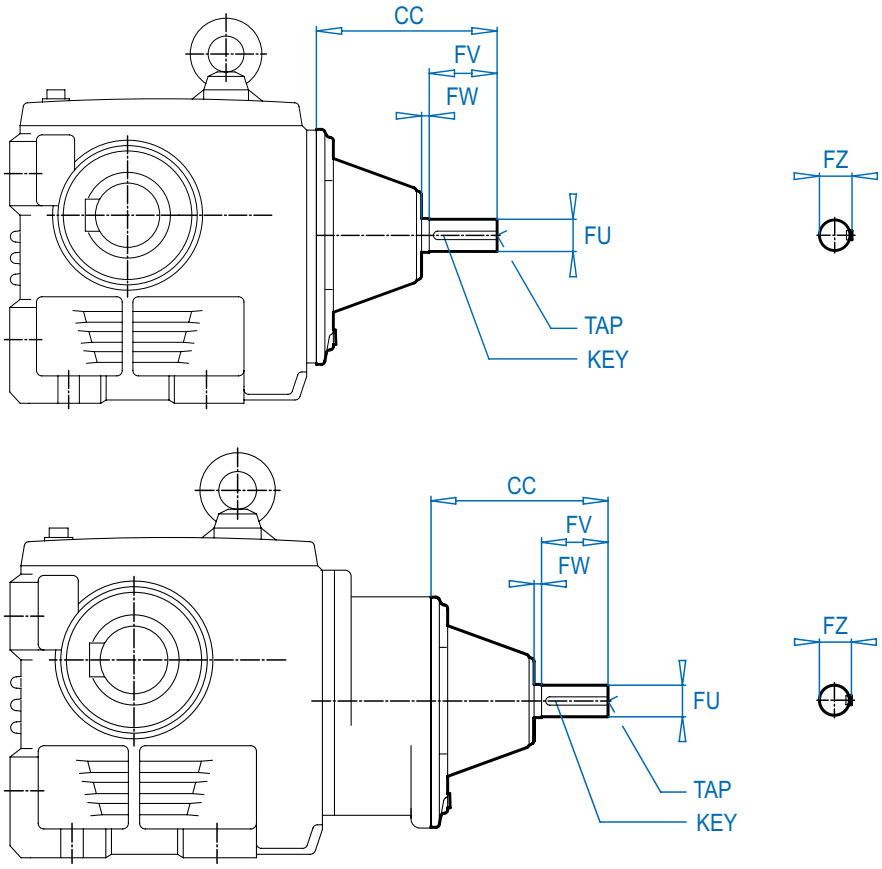

DIMENSIONS
Dimensions in Inches

Unit	CC	FW	FV	FU	FZ	TAP	KEY	Unit Dimensions
SK 02040	4.30	0.20	1.57	0.625 +0.0000 -0.0005	0.70	1/4-20	$^{3}/_{16}$ x $^{3}/_{16}$ x 1-$^{1}/_{4}$	⇨🕮 622
SK 02050 **SK 13050**	4.80	0.35	1.50	0.625 +0.0000 -0.0005	0.70	1/4-20	$^{3}/_{16}$ x $^{3}/_{16}$ x 1-$^{1}/_{4}$	⇨🕮 626 ⇨🕮 626
SK 12063 **SK 13063**	4.80	0.35	1.50	0.625 +0.0000 -0.0005	0.70	1/4-20	$^{3}/_{16}$ x $^{3}/_{16}$ x 1-$^{1}/_{4}$	⇨🕮 634 ⇨🕮 638
SK 12080 **SK 13080**	4.80	0.35	1.50	0.625 +0.0000 -0.0005	0.70	1/4-20	$^{3}/_{16}$ x $^{3}/_{16}$ x 1-$^{1}/_{4}$	⇨🕮 642 ⇨🕮 646
SK 32100 **SK 33100**	6.75 4.80	0.28 0.35	2.00 1.50	0.875 +0.0000 -0.0005 0.625 +0.0000 -0.0005	0.96 0.70	1/4-20 1/4-20	$^{3}/_{16}$ x $^{3}/_{16}$ x 1-$^{5}/_{8}$ $^{3}/_{16}$ x $^{3}/_{16}$ x 1-$^{1}/_{4}$	⇨🕮 650 ⇨🕮 654
SK 42125 **SK 43125**	8.39 6.75	0.35 0.28	3.12 2.00	1.500 +0.0000 -0.0005 0.875 +0.0000 -0.0005	1.66 0.96	5/8-11 1/4-20	$^{3}/_{8}$ x $^{3}/_{8}$ x 2-$^{1}/_{2}$ $^{3}/_{16}$ x $^{3}/_{16}$ x 1-$^{5}/_{8}$	⇨🕮 658 ⇨🕮 662

Send Quote Requests to info@automatedpt.com
Call +1(800)985-6929 To Order or Order Online At Nordgearmotors.com




IEC Inputs

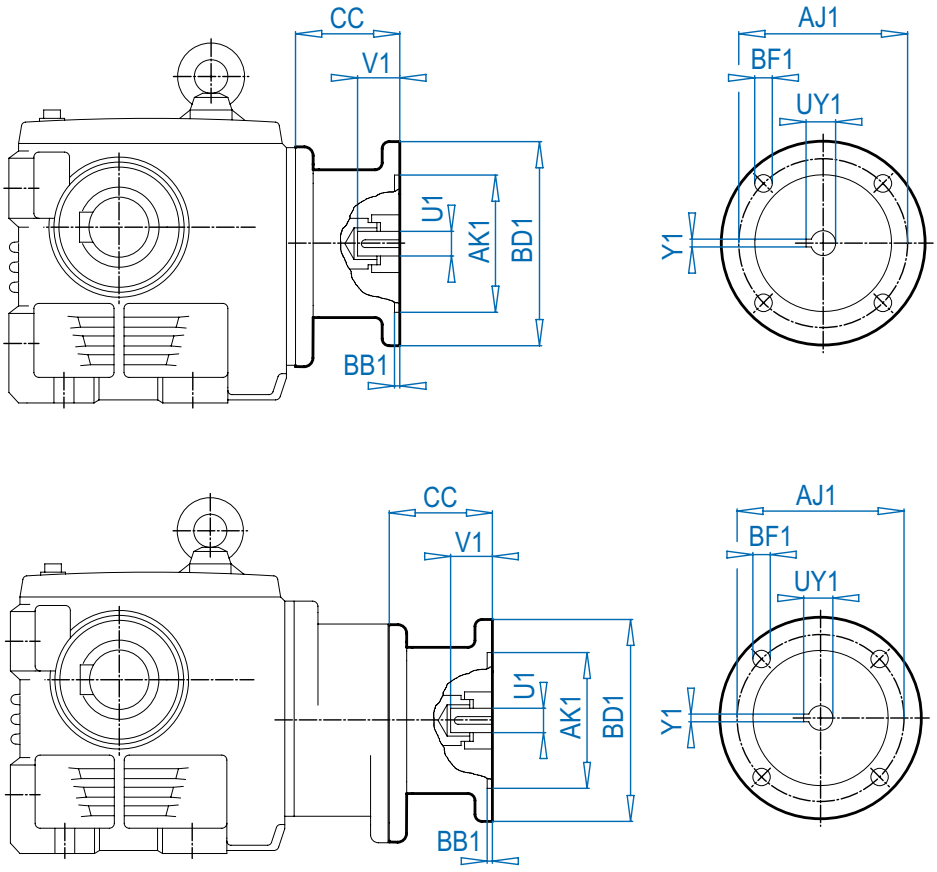

IEC Dimensions (mm)

Input	AJ1	AK1	BB1	BD1	BF1	U1	V1	UY1	Y1
IEC 63	115	95	3.5	140	M8	11	23	12.8	4
IEC 71	130	110	4.0	160	M8	14	30	16.3	5
IEC 80	165	130	4.0	200	M10	19	40	21.8	6
IEC 90	165	130	4.0	200	M10	24	50	27.3	8
IEC 100	215	180	5.0	250	M12	28	60	31.3	8
IEC 112	215	180	5.0	250	M12	28	60	31.3	8
IEC 132	265	230	5.0	300	M12	38	80	41.3	10
IEC 160	300	250	6.0	350	M16	42	110	45.3	12

CC Dimensions

Unit	IEC63	IEC 71	IEC 80	IEC 90	IEC 100	IEC 112	IEC 132	IEC 160
SK 02040	3.35	3.35	4.06	4.06	-	-	-	-
SK 02050	3.35	3.35	4.13	4.13	5.12	5.12	-	-
SK 13050	3.35	3.35	4.13	4.13	5.12	5.12	-	-
SK 12063	3.35	3.35	4.13	4.13	5.12	5.12	-	-
SK 13063	3.35	3.35	4.13	4.13	5.12	5.12	-	-
SK 12080	3.35	3.35	4.13	4.13	5.12	5.12	-	-
SK 13080	3.35	3.35	4.13	4.13	5.12	5.12	-	-
SK 32100	-	3.46	4.21	4.21	4.88	4.88	6.14	-
SK 33100	3.35	3.35	4.13	4.13	5.12	5.12	-	-
SK 42125	-	-	-	4.29	5.24	5.24	7.48	7.64
SK 43125	-	3.46	4.21	4.21	4.88	4.88	6.14	-

Send Quote Requests to info@automatedpt.com
Call +1(800)985-6929 To Order or Order Online At Nordgearmotors.com

B14 Flange & Protection Covers



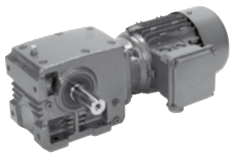

DRIVESYSTEMS

SK 02050AZ - SK 33100AZ

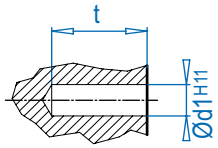

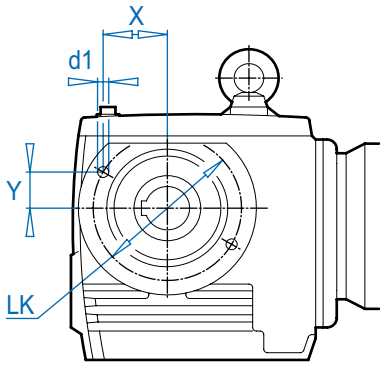

SK 42125AZ
SK 43125AZ

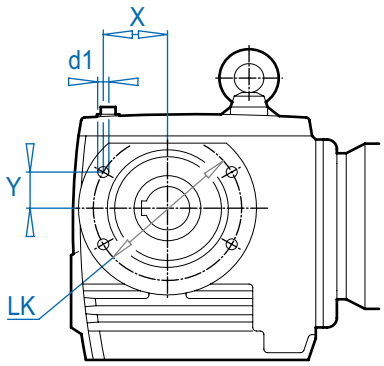

Type **Outline dimensions**

	$d1^{H11}$ x t (mm)	LK	X	Y
SK 02050 AZ SK 13050 AZ	Ø 8 x 12	4.528	2.210	0.490
SK 12063 AZ SK 13063 AZ	Ø 8 x 12	4.528	2.210	0.490
SK 12080 AZ SK 13080 AZ	Ø 10 x 15	6.496	3.171	0.703
SK 32100 AZ SK 33100 AZ	Ø 12 x 20	8.465	4.132	0.916
SK 42125 AZ SK 43125 AZ	Ø 12 x 20	10.433	4.400	2.803

DIMENSIONS
Dimensions in Inches

SK ... AZH

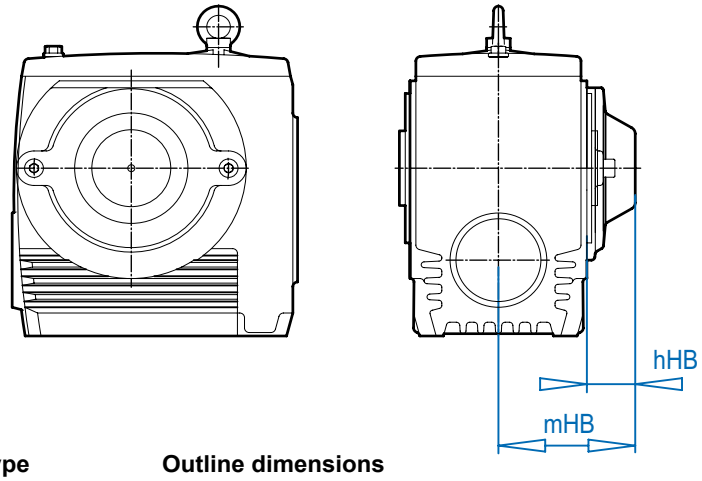

Type **Outline dimensions**

	hHB	mHB
SK 02050 AZH SK 13050 AZH	1.46	3.82
SK 12063 AZH SK 13063 AZH	1.46	4.09
SK 12080 AZH SK 13080 AZH	1.61	4.57
SK 32100 AZH SK 33100 AZH	1.93	5.55
SK 42125 AZH SK 43125 AZH	2.09	6.61

SK ... AZH66

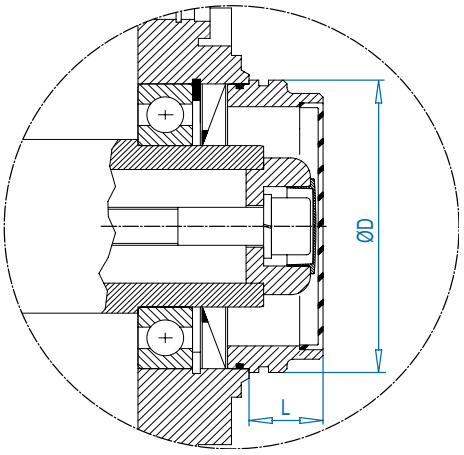

Type

	ØD	L
SK 02050 AZH66 SK 13050 AZH66	3.15	0.98
SK 12063 AZH66 SK 13063 AZH66	3.35	1.10
SK 12080 AZH66 SK 13080 AZH66	4.09	1.38
SK 32100 AZH66 SK 33100 AZH66	5.32	1.57
SK 42125 AZH66 SK 43125 AZH66	5.91	1.57

Send Quote Requests to info@automatedpt.com
Call +1(800)985-6929 To Order or Order Online At Nordgearmotors.com

Solid Shaft Dimensions

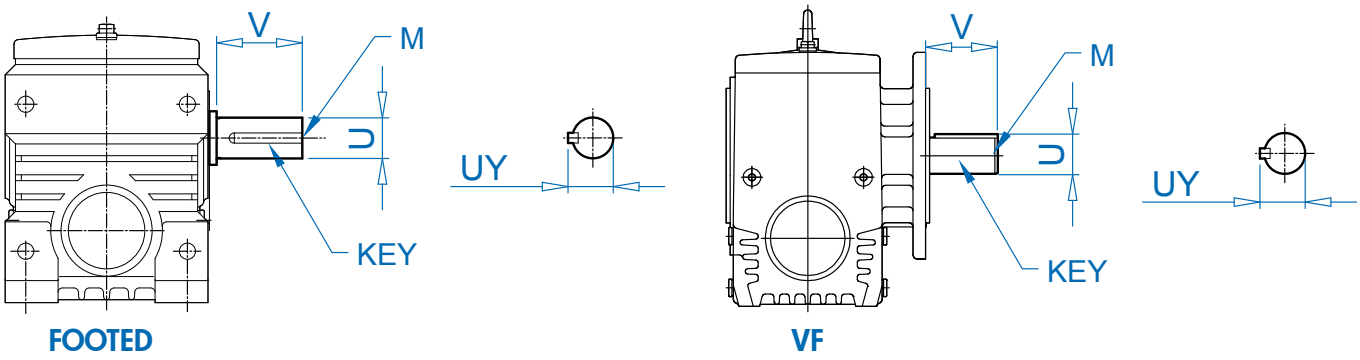

TYPE	U	DIAMETER TOLERANCE	V	UY	KEY SIZE w x h x l	KEY QTY	DRILL & TAP M
SK 02040	0.750	+0.0000 / -0.0005	1.57	0.83	3/16 x 3/16 x 1	1	1/4-20
	20mm	+0.015 / +0.002mm	40mm	22.5mm	6 x 6 x 32mm	1	M6
SK 02050	1.000	+0.0000 / -0.0005	2.13	1.11	1/4 x 1/4 x 1-5/8	1	3/8-16
SK 13050	25mm	+0.015 / +0.002mm	50mm	28mm	8 x 7 x 40mm	1	M10
SK 12063	1.250	+0.0000 / -0.0005	2.75	1.36	1/4 x 1/4 x 2-1/4	1	1/2-13
SK 13063	30mm	+0.015 / +0.002mm	60mm	33mm	8 x 7 x 50mm	1	M10
SK 12080	1.375	+0.0000 / -0.0005	2.75	1.51	5/16 x 5/16 x 2-1/8	1	5/8-11
SK 13080	35mm	+0.018 / +0.002mm	70mm	38mm	10 x 8 x 60mm	1	M12
SK 32100	1.875	+0.0000 / -0.0010	3.50	2.09	1/2 x 1/2 x 2-3/4	1	5/8-11
SK 33100	45mm	+0.018 / +0.002mm	90mm	48.5mm	14 x 9 x 80mm	1	M16
SK 42125	2.375	+0.0000 / -0.0010	4.50	2.65	5/8 x 5/8 x 3-1/2	1	3/4-10
SK 43125	60mm	+0.030 / +0.011mm	120mm	64mm	18 x 11 x 110mm	1	M20

- Dimensions are in inches unless otherwise noted.
- Metric Keys are captured in keyways.
- For shaft sizes not shown, consult NORD.

Dimensions in Inches
DIMENSIONS
ALTERNATE SHAFTS SEE PAGES 669 - 671

Send Quote Requests to info@automatedpt.com
Call +1(800)985-6929 To Order or Order Online At Nordgearmotors.com

Hollow Shaft Dimensions

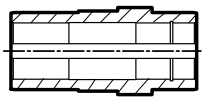

Hollow Shaft Dimensions (AZ-AF)

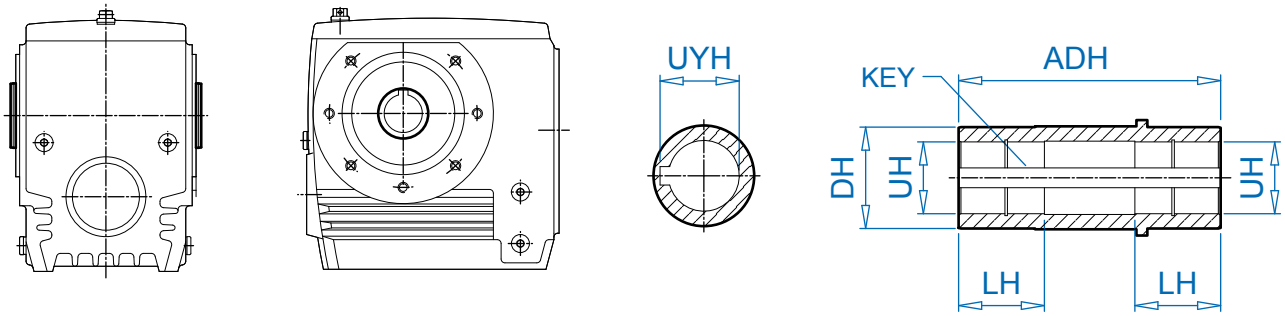

TYPE	UH	DIAMETER TOLERANCE	ADH	LH	DH	UYH	KEY SIZE w x h x l	KEY QTY
SK 02040 AZ/AF	0.750*	+0.0010 / -0.0000	4.72	1.10	1.38	0.84	3/16 x 3/16 x 1	2
	20mm	+0.021 / -0.000mm	120mm	28mm	35mm	22.8mm	6 x 6 x 25mm	2
SK 02050 AZ/AF	1.1875*	+0.0010 / -0.0000	5.20	1.77	1.77	1.31	1/4 x 1/4 x 1-5/8	2
SK 13050 AZ/AF	1.250	+0.0010 / -0.0000	5.20	1.77	1.77	1.37	1/4 x 1/4 x 1-5/8	2
	1.000	+0.0010 / -0.0000	5.20	1.77	1.77	1.11	1/4 x 1/4 x 1-5/8	2
	25mm	+0.021 / -0.000mm	132mm	45mm	45mm	28.3mm	8 x7 x 40mm	2
	30mm	+0.021 / -0.000mm	132mm	45mm	45mm	33.3mm	8 x7 x 40mm	2
SK 12063 AZ/AF	1.4375*	+0.0010 / -0.0000	5.83	1.97	1.97	1.54	3/8 x 1/4 x 2	2
SK 13063 AZ/AF	1.375	+0.0010 / -0.0000	5.83	1.97	1.97	1.52	5/16 x 5/16 x 2-1/8	2
	30mm	+0.021 / -0.000mm	148mm	50mm	50mm	33.3mm	8 x 7 x 40mm	2
	35mm	+0.025 / -0.000mm	148mm	50mm	50mm	38.3mm	10 x 8 x 42mm	2
SK 12080 AZ/AF	1.8125*	+0.0012 / -0.0000	6.61	2.17	2.56	1.97	1/2 x 3/8 x 2-5/8	2
SK 13080 AZ/AF	1.750	+0.0012 / -0.0000	6.61	2.17	2.56	1.92	3/8 x 3/8 x 2-1/2	2
	1.500	+0.0010 / -0.0000	6.61	2.17	2.56	1.67	3/8 x 3/8 x 2-1/2	2
	1.4375	+0.0010 / -0.0000	6.61	2.17	2.56	1.61	3/8 x 3/8 x 2-1/2	2
	40mm	+0.025 / -0.000mm	168mm	55mm	65mm	43.3mm	12 x 8 x 50mm	2
	45mm	+0.025 / -0.000mm	168mm	55mm	65mm	48.8mm	14 x 9 x 70mm	2
SK 32100 AZ/AF	2.4375*	+0.0012 / -0.0000	7.95	2.76	3.35	2.62	5/8 x 7/16 x 2-7/8	2
SK 33100 AZ/AF	2.375	+0.0012 / -0.0000	7.95	2.76	3.35	2.65	5/8 x 5/8 x 2-1/4	2
	2.000	+0.0012 / -0.0000	7.95	2.76	3.35	2.22	1/2 x 1/2 x 2-3/4	2
	50mm	+0.025 / -0.000mm	202mm	70mm	85mm	53.8mm	14 x 9 x 70mm	2
	60mm	+0.030 / -0.000mm	202mm	70mm	85mm	64.4mm	18 x 11 x 70mm	2
SK 42125 AZ/AF	2.750*	+0.0012 / -0.0000	9.84	3.35	3.74	3.03	5/8 x 5/8 x 4	2
SK 43125 AZ/AF	2.375	+0.0012 / -0.0000	9.84	3.35	3.74	2.65	5/8 x 5/8 x 4	2
	2.9375	+0.0012 / -0.0000	9.84	3.35	3.74	3.14	3/4 x 1/2 x 4	2
	60mm	+0.030 / -0.000mm	250mm	89mm	89mm	64.4mm	18 x 11 x 70mm	2
	70mm	+0.030 / -0.000mm	250mm	89mm	89mm	74.9mm	20 x 12 x 90mm	2

* standard size

- All dimensions are in inches unless otherwise noted.
- For bore sizes not shown consult NORD.

DIMENSIONS
Dimensions in Inches
ALTERNATE SHAFTS SEE PAGES 669 - 671

Send Quote Requests to info@automatedpt.com
Call +1(800)985-6929 To Order or Order Online At Nordgearmotors.com

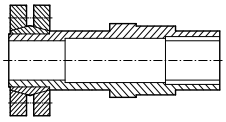

Shrink Disc Shaft Dimensions

Shrink Disc Shaft Dimensions (AZSH)

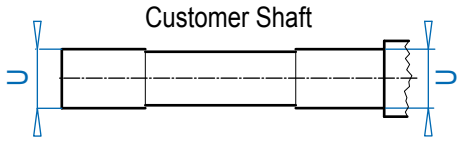

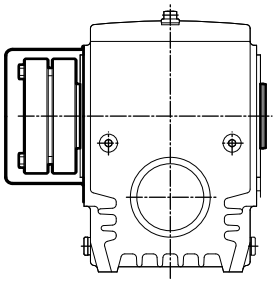

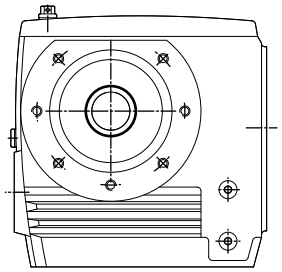

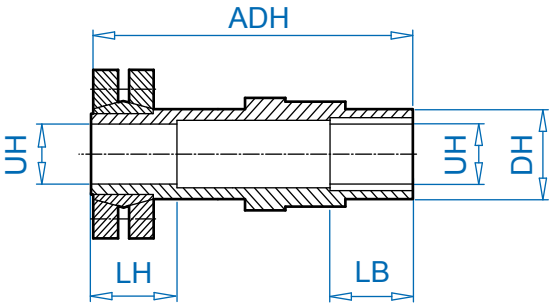

Type	HOLLOW SHAFT		ADH	LB	LH	DH	CUSTOMER SHAFT	
	UH	TOLERANCE					U	TOLERANCE
SK 02050 AZSH	1.250	+0.0009 / -0.0000	6.89	1.24	1.57	1.77	1.250	+0.0000 / -0.0006
SK 13050 AZSH	25mm	+0.021 / -0.000mm	170mm	31.5mm	35mm	45mm	25mm	+0.000 / -0.013mm
	30mm	+0.021 / -0.000mm	175mm	31.5mm	40mm	45mm	30mm	+0.000 / -0.013mm
SK 12063 AZSH	1.4375	+0.0009 / -0.0000	7.68	1.57	1.77	1.97	1.4375	+0.0000 / -0.0006
SK 13063 AZSH	30mm	+0.021 / -0.000mm	190mm	31.5mm	40mm	50mm	30mm	+0.000 / -0.013mm
	35mm	+0.025 / -0.000mm	195mm	41.5mm	45mm	50mm	35mm	+0.000 / -0.016mm
SK 12080 AZSH	1.750	+0.0009 / -0.0000	8.66	1.57	1.97	2.56	1.750	+0.0000 / -0.0006
SK 13080 AZSH	40mm	+0.025 / -0.000mm	220mm	41.5mm	50mm	65mm	40mm	+0.000 / -0.016mm
	45mm	+0.025 / -0.000mm	220mm	41.5mm	50mm	65mm	45mm	+0.000 / -0.016mm
SK 32100 AZSH	2.4375	+0.0011 / -0.0000	10.43	2.36	2.76	3.35	2.4375	+0.0000 / -0.0007
SK 33100 AZSH	60mm	+0.030 / -0.000mm	265mm	61.5mm	70mm	85mm	60mm	+0.000 / -0.019mm
	50mm	+0.025 / -0.000mm	255mm	51.5mm	55mm	85mm	50mm	+0.000 / -0.016mm
SK 42125 AZSH	2.750	+0.0011 / -0.0000	12.99	2.76	3.15	3.74	2.750	+0.0000 / -0.0007
SK 43125 AZSH	70mm	+0.030 / -0.000mm	330mm	71.5mm	80mm	95mm	70mm	+0.000 / -0.019mm
	60mm	+0.030 / -0.000mm	315mm	61.5mm	60mm	95mm	60mm	+0.000 / -0.019mm

ALTERNATE SHAFTS SEE PAGES 669 - 671

Send Quote Requests to info@automatedpt.com
Call +1(800)985-6929 To Order or Order Online At Nordgearmotors.com

Fixing Element Kit

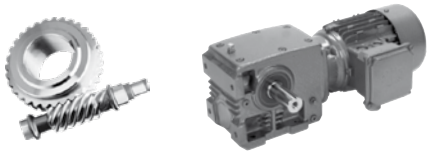

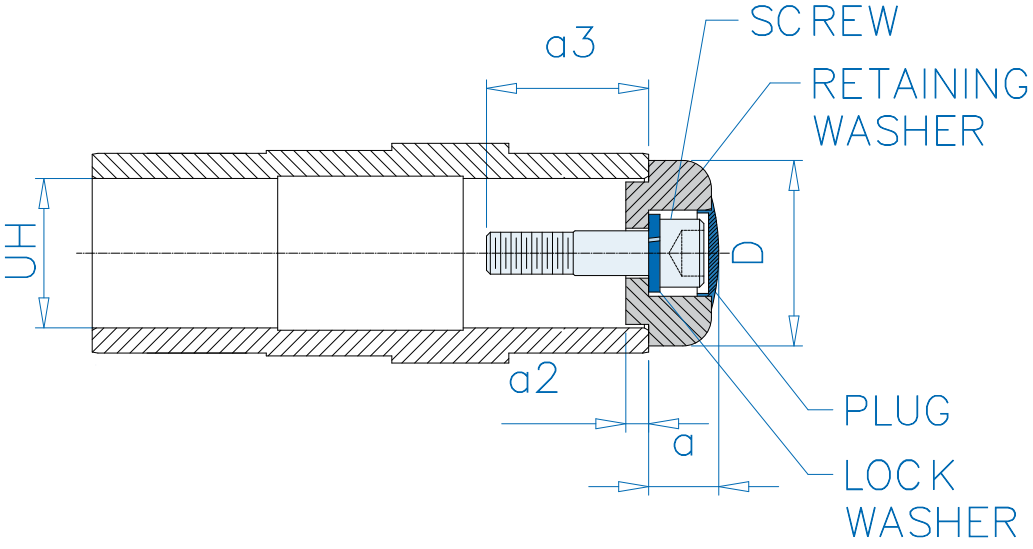

DIMENSIONS
Dimensions in Inches

Inch Shaft Hollow Bore (in)

UH	D	a	a2	Screw ❶	a3 ❶	Screw ❷	a3 ❷	Screw ❸	a3 ❸
0.7500	1.181	0.557	0.118	1/4 - 20 x 3/4	0.652	1/4 - 20 x 1	0.902	-	-
1.0000	1.496	0.767	0.150	3/8 - 16 x 3/4	0.624	3/8 - 16 x 1-1/4	1.124	-	-
1.1875	1.575	0.769	0.150	7/16 - 14 x 2-1/16	2.016	-	-	-	-
1.2500	1.575	0.769	0.150	7/16 - 14 x 2-1/16	2.016	-	-	-	-
1.3750	1.772	0.946	0.197	5/8 - 11 x 1-1/2	1.461	5/8 - 11 x 2-1/4	2.211	5/8 - 11 x 1	0.961
1.4375	1.772	0.946	0.197	5/8 - 11 x 1-1/2	1.461	5/8 - 11 x 2-1/4	2.211	5/8 - 11 x 1	0.961
1.5000	1.772	0.946	0.315	5/8 - 11 x 1-1/2	1.461	5/8 - 11 x 2-1/4	2.211	5/8 - 11 x 1	0.961
1.7500	2.165	0.927	0.315	5/8 - 11 x 2	2.000	5/8 - 11 x 1-1/2	1.500	-	-
1.8125	2.362	0.966	0.315	5/8 - 11 x 2-1/4	2.250	-	-	-	-
2.0000	2.559	0.971	0.315	5/8 - 11 x 2-1/4	2.250	-	-	-	-
2.3750	2.953	1.129	0.354	3/4 - 10 x 2-1/2	2.500	-	-	-	-
2.4375	2.953	1.129	0.354	3/4 - 10 x 2-1/2	2.500	-	-	-	-
2.7500	3.740	1.132	0.354	3/4 - 10 x 2-1/2	2.500	-	-	-	-
2.9375	3.740	1.132	0.354	3/4 - 10 x 2-1/2	2.500	-	-	-	-

Metric Shaft Hollow Bore (mm)

UH	D	a	a2	Screw ❶	a3 ❶	Screw ❷	a3 ❷
20	30	14	3	M6 x 30	27.5	M6 x 22	19.5
25	38	19	3.8	M10 x 45	41.8	M10 x 30	26.8
30	40	19	3.8	M10 x 45	43.8	M10 x 30	28.8
35	45	23.5	5	M12 x 55	54	M12 x 35	34
40	55	24	8	M16 x 70	70	M16 x 45	45
45	60	25	8	M16 x 70	70	M16 x 45	45
50	65	25	8	M16 x 70	70	M16 x 45	45
60	75	29	9	M20 x 90	90	M20 x 55	55
70	95	29	9	M20 x 90	90	M20 x 55	55

❶, ❷, ❸ - Each fixing element kit may contain up to 3 different kinds of screws

Send Quote Requests to info@automatedpt.com
Call +1(800)985-6929 To Order or Order Online At Nordgearmotors.com

Inputs

- Solid Input Shaft - W
- NEMA C-Face
- IEC B5 (Metric)
- Servo Input
- Top Mount
- Scoop Mount
- Flange Input Shaft
- Custom Mounting

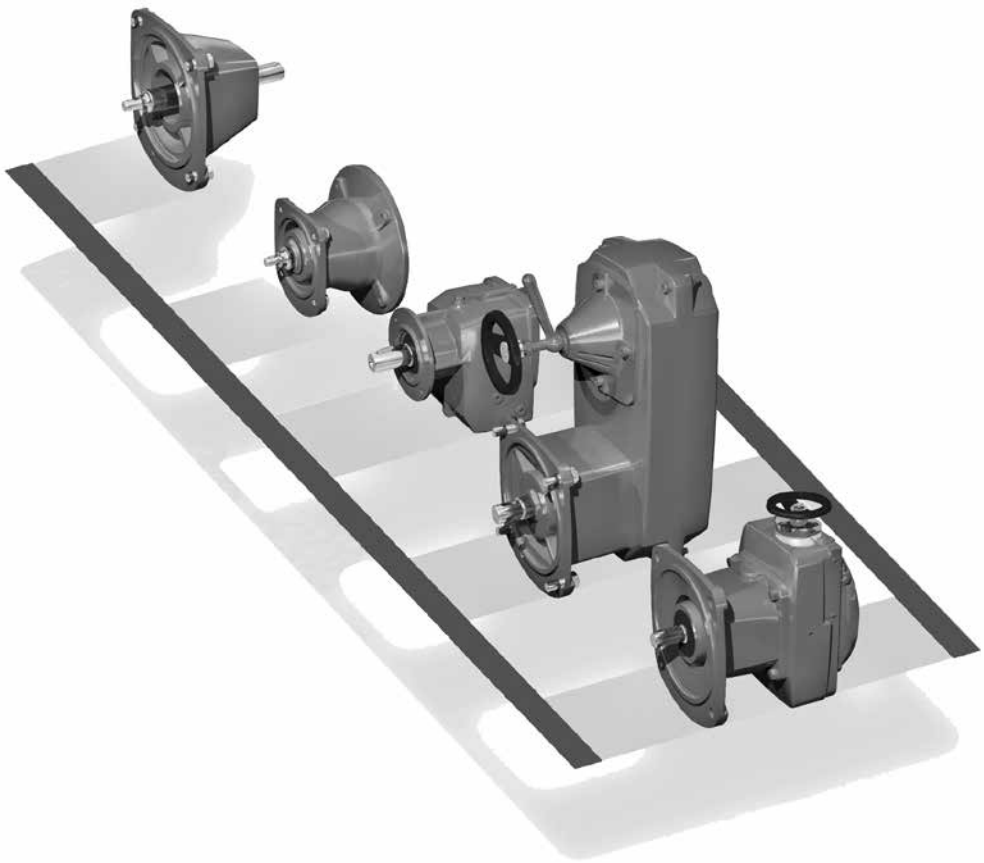

NORD DRIVESYSTEMS

www.nord.com







Send Quote Requests to info@automatedpt.com
Call +1(800)985-6929 To Order or Order Online At Nordgearmotors.com

Send Quote Requests to info@automatedpt.com Call +1(800)985-6929 To Order or Order Online At Nordgearmotors.com

Input Section

Input

NORD's modular design allows for many different types of inputs to be added to gear reducers. All inputs are bolt on and include machined pilots to ensure simple and accurate assembly. NORD offers the following different input types:

- Integral motor
- Solid input shaft
- NEMA C-face motor adapter
- IEC B5 motor adapter
- Servo motor adapter
- Top mount motor platform
- Scoop mount motor platform
- Custom mounting interface

Nomenclature

After the letters, 'SK' Reducer sizes are indicated followed by the dash (-), then the input device such as:

- SK32 – 90L/4 (Integral motor)
- SK32 – W (Solid input shaft)
- SK32 – 140TC (NEMA C-face motor adaptor)
- SK32 – IEC80 (IEC B5 motor adaptor)
- SK32 – SEP100 (Servo motor adaptor)
- SK32 – MK140T (Top mount motor platform)
- SK32 – S140T (Scoop mount motor platform)
- SK32 – WII (Custom mounting interface)

Example Nomenclature

SK32 - W

Solid Input Shaft

Gear unit

Gear unit with solid input shaft.

SK32 -140TC

NEMA 140 TC Motor Adaptor

Gear unit

Gear unit to recieve standard NEMA C-Face motor adaptor.

SK32 - IEC80

IEC 80 B5 Motor Adaptor

Gear unit

Gear unit to recieve standard metric IEC B5 flange mount motor adaptor.

Solid Input Shaft	NEMA Motor Adapter	IEC Motor Adapter	Integral Motor		Integral Energy Efficent Motor		Scoop Mount Motor Platform	Top Mount Motor Platform	Servo Motor Adapter Keyed
W	N56C	IEC 63	**63S/4** - 0.16hp	**160L/4** - 20hp	**80LH/4** - 1hp	**200LH/4** - 40hp	S56	MKN056	SEP 100
	N140 TC	IEC 71	**63L/4** - 0.25hp	**180MX/4** - 25hp	**90SH/4** - 1.5hp	**225SH/4** - 50hp	S140T	MKN140	SEP 130
	N180TC	IEC 80	**71S/4** - 0.33hp	**180LX/4** - 30hp	**90LH/4** - 2hp	**2525MH/4** - 60hp	S180T	MKN180	SEP 165
	N210TC	IEC 90	**71L/4** - .05hp	**200L/4** - 40hp	**100LH/4** - 3hp	**250MH/4** - 75hp	S210T	MKN210	SEP 215
	N250TC	IEC 100	**80S/4** - 0.75hp	**225S/4** - 50hp	**112MH/4** - 5hp	**280SH/4** - 100hp	S250T	MKN250	SEP 300
	N280TC	IEC 112	**80L/4** - 1hp	**2525M/4** - 60hp	**132SH/4** - 7.5hp	**280MH/4** - 125hp	S280T	MKN280	Servo Motor Adapter Clamp
	N320TC	IEC 132	**90S/4** - 1.5hp	**250M/4** - 75hp	**132MH/4** - 10hp	**315SH/4** - 150hp	S320T	MKN320	
	N360TC	IEC160	**90L/4** - 2hp	**280S/4** - 100hp	**160MH/4** - 15hp	**315MH/4** - 175hp	S360T	MKN360	
	N400TC	IEC 180	**100L/4** - 3hp	**280M/4** - 125hp	**160LH/4** - 20hp	**315MAH/4** - 200hp	S400T	MKN400	SEK 100
		IEC 200	**100LA/4** - 5hp	**315S/4** - 150hp	**180MXH/4** - 25hp	**315LH/4** - 250hp			SEK 130
		IEC 225	**112M/4** - 5hp	**315M/4** - 175hp	**180LH/4** - 30hp				SEK 165
		IEC 250	**132S/4** - 7.5hp	**315MA/4** - 200hp					SEK 215
		IEC280	**132M/4** - 10hp	**315L/4** - 250hp					SEK 300
		IEC 315	**160M/4** - 15hp	Other Speeds Available		Other Speeds Available			

Send Quote Requests to info@automatedpt.com
Call +1(800)985-6929 To Order or Order Online At Nordgearmotors.com

Send Quote Requests to info@automatedpt.com
Call +1(800)985-6929 To Order or Order Online At Nordgearmotors.com

Integral Motors

NORD provides integral motors that mount directly to the gearbox. Integral motor mounting eliminates the need for costly v-belts or sheaves and directly couples the motor to the reducer. This also results in a dimensionally compact one-piece package.

NORD high performance integral motors are available in many operational voltages, are inverter duty rated, and offer many valuable options including energy efficient motors and power off brakes. For more information on integral motors, see the catalogs motor section (section G).

Solid Input Shaft

Designed to mount couplings, sheaves or sprockets, which transfer torque from the prime mover. The input shaft is made from ANSI 1045 or stronger material dimensioned with long keys according to ANSI B17 standards. Bearings are sized to handle overhung loads resulting from belt or sprocket inputs. See Section A for more information on the capacity of each input housing assembly. The maximum gearbox input power rating is indicated in the speed reducer performance tables.

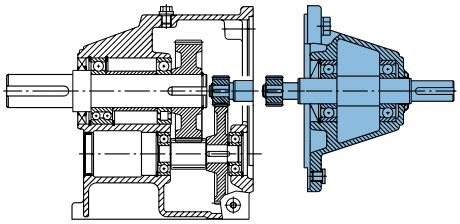

The bearings of solid input shaft type W of the larger gear units require re-lubrication at a regular interval. This is necessary for double-stage gearboxes sizes SK62 or SK6282 and larger, and triple-stage gearboxes from size SK73, SK7382 or SK9072.1 and larger. To lubricate the bearing of the input shaft, approximately 1 oz (25 to 30g) of NIGI 2EP lithium-based grease should be added by the grease zerk approximately every 4000 service hours. To insure adequate service intervals, the grease zerk can be replaced with an Automatic Lubricator.

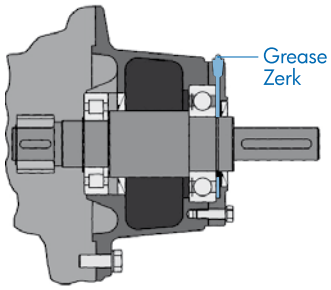

Automatic Lubricator

Double-reduction gearboxes sizes SK62, SK6282 and larger and triple reduction gearboxes SK73, SK6382, SK9072.1 and larger with NEMA C-face or IEC adapters larger than 250TC/IEC160 are provided with an automatic lubricator. Automatic lubricators contain 120 cm3 (4 oz) of grease that is released over time to the outboard adapter bearing. With 8 hours/day operation the lubricator will last 12 months. The automatic lubricator is designed for ambient temperatures between 32°F (0°C) and 104°F (40°C).

CAUTION

The PERMA Automatic Lubrication canister is not recommended for applications where the motor is installed vertically. For alternate solutions, please consult NORD with "the application details."

The automatic lubricator must be activated before the gearbox is put into operation. Activation is accomplished by turning the plastic eyelet in to the canister until the eyelet breaks off. For replacement automatic lubricators order by the part number:

28301000 - Standard canister
28301010 - Food grade canister

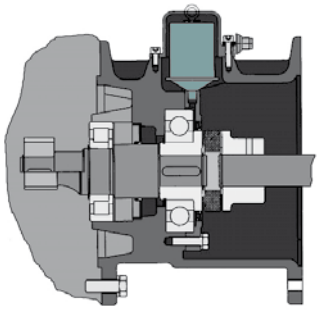

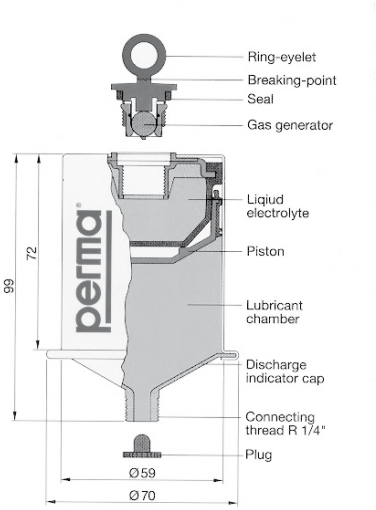

Send Quote Requests to info@automatedpt.com
Call +1(800)985-6929 To Order or Order Online At Nordgearmotors.com

Send Quote Requests to info@automatedpt.com Call +1(800)985-6929 To Order or Order Online At Nordgearmotors.com

NEMA C-Face Motor Adapter

NEMA C-face motor adapters allow for easy installation and removal of industry standard C-face motors. NEMA C-face motor adapters consist of a coupling and an adapter housing that connects the motor to the gear reducer. Gear units with NEMA C-face adapters are commonly used where applications require specialized motors or the user wants to easily find a replacement motor if failure occurs. NORD also offers high performance NEMA C-face motors and brakemotors, that can be factory installed to the motor adapter.

NORD motor adapters deliver nearly 100% of the torque generated by the motor and can be used from -22°F (-30°C) to 212°F (100°C). Most motor adapters have specially sealed bearings that are lubricated for life. However, some larger adapters are supplied with an automatic lubricator, which provides time released grease to the outboard adapter bearing. The automatic lubricator needs replacement after a specific service interval, see page 675 for more details.

The maximum input power of a gear unit with a NEMA C-face adapter is generally limited by the power rating of the standard NEMA C-face motor size. The power limit is indicated in the ratings table for a standard 4-pole 1750 rpm motor. In some cases the gearbox limit ($T2_{max}$) will be the limiting capacity. Both the NEMA adapter limit and the gearbox torque limit must be considered. If the speeds required exceed those included in the performance and speed reduction tables please contact NORD.

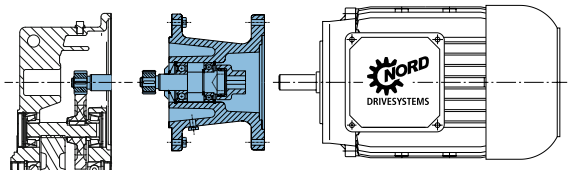

IEC Motor Adapter (example SK32 – IEC63)

IEC motor adapters allow for easy installation and removal of industry standard IEC motors according to DIN 42677. The IEC adapter is very similar to the NEMA C-face adapter in construction. The maximum input power is generally limited by the IEC motor size. For ratings and dimensions, please consult NORDS's metric catalogs.

Vertical Motor Adapter Applications

Gear units with motors frame sizes 250TC (IEC160) and larger, in a vertical up motor mounting position, NORD recommends using an integral gearmotor instead of a NEMA or IEC input adapter. If your application requires this mounting position and a NEMA or IEC input, please consult NORD. In vertical down motor mounted applications it is recommended to shorten the maintenance interval.

Couplings

Couplings are made with tough abrasion resistant materials, which resist most chemicals and petroleum products. They are electrically isolated (prevent metal to metal contact) and require no lubrication or maintenance. Depending on the size of the C-face input, NORD provides either a gear or jaw type coupling.

Gear Couplings

Gear couplings are used with 56C to 280TC adapters and provide a compact space saving design. C-face adapter input shafts have a machined male spline that meshes with a molded nylon spline on the coupling. This specially designed molded nylon sleeve that exhibits high torsional stiffness, resulting in minimum fit-up backlash and reduced internal frictional losses. Gear couplings lightweight design yields low inertia and use blind assembly and slip together components to make inspection easy without disassembly.

NORD incorporates two styles of gear couplings, the "J" and "M" styles. The "J" style is one-piece couplings consisting of a nylon sleeve and metal hub that are fused together. The "M" style is a two-piece coupling consisting of a separate nylon sleeve and metal hub.

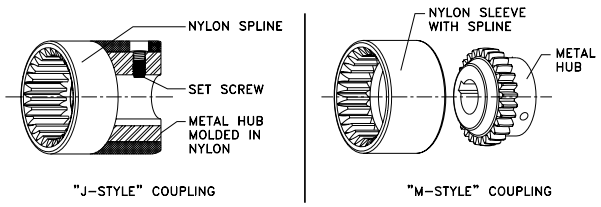

Jaw Couplings

Jaw couplings are used with 320TC and larger adapters. The cast iron jaw type couplings have a urethane "spider" that provides smooth transmission of the motor torque and has excellent shock and vibration dampening characteristics. A set screw on the coupling prohibits axial movement along the motor shaft.

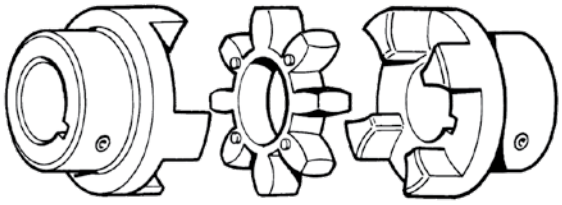

Send Quote Requests to info@automatedpt.com
Call +1(800)985-6929 To Order or Order Online At Nordgearmotors.com

Send Quote Requests to info@automatedpt.com Call +1(800)985-6929 To Order or Order Online At Nordgearmotors.com

NEMA Motor Adapter Details

NEMA C-face Motor Frame Size	NEMA Adapter Nomenclature	4 pole Motor HP	Max Motor Weight [lb]	Coupling Description	Coupling Bore (inches)	Maximum Coupling Torque Capacity (in-lb)	Safety Factor
56 C	- 56C	≤ 1.0	66	J14	0.625	177	3.3 min
56 C	- 56C	≤ 1.5	66	J24	0.875	354	6.6 min
143 TC	- 140TC	≤ 1.5	88				6.6 min
145 TC	- 140TC	≤ 2	110				4.9 min
145 TC	- 140TC	3	110				3.3 min
182 TC	- 180TC	3	130	J28	1.125	797	7.4 min
184 TC	- 180TC	5	175				4.4 min
182 TC	- 180TC	3	130	M38	1.125	1416	13.1 min
184 TC	- 180TC	5	175				7.9 min
213 TC	- 210TC	7.5	220		1.375		5.2 min
215 TC	- 210TC	10	220				4.0 min
254 TC	- 250TC	15	450	M42	1.625	1770	3.3 min
256 TC	- 250TC	20	450				2.5 min
284 TC	- 280TC	25	550	M48	1.875	2478	2.8 min
286 TC	- 280TC	30	550				2.3 min
324 TC	- 320TC	40	770	R65	2.125	11,060	8.0 min
326 TC	- 320TC	50	1100				6.4 min
364 TC	- 360TC	60	1550	R90	2.375	42,480	19.9 min
365 TC	- 360TC	75	1550				16.1 min
404 TSC	- 400TSC	100	2205		2.875		12.1 min

IEC Motor Adapter Details

IEC Motor B5 4 pole	IEC Adapter Nomenclature	HP / kW	Max Weight Limit [lb]	Coupling Description	Coupling Bore (mm)	Maximum Coupling Torque Capacity (Nm)	Safety Factor
63 S/4	- IEC 63	0.16 / 0.12	56	J14	11	20	23.2 min
63 L/4	- IEC 63	0.25 / 0.18	56				15.8 min
71 S/4	- IEC 71	0.33 / 0.25	67		14		11.5 min
71 L/4	- IEC 71	0.50 / 0.37	67				7.8 min
80 S/4	- IEC 80	0.75 / 0.55	89	J24	19	40	10.4 min
80 L/4	- IEC 80	1.00 / 0.75	89				7.6 min
90 S/4	- IEC 90	1.5 / 1.1	111		24		5.3 min
90 L/4	- IEC 90	2.0 / 1.5	111				3.8 min
100 L/4	- IEC 100	3.0 / 2.2	133	J28	28	90	6.1 min
100 L/40	- IEC 100	5.0 / 3.7	133				4.4 min
112 M/4	- IEC 112	5.3 / 4.0	177				3.4 min
132 S/4	- IEC 132	7.5 / 5.5	221	M38	38	160	4.3 min
132 M/4	- IEC 132	10 / 7.5	221				3.2 min
160 M/4	- IEC 160	15 / 11	441	M42	42	200	2.2 min
160 L/4	- IEC 160	20 / 15	441				1.6 min
180 M/4	- IEC 180	25 / 18.5	552	M48	48	280	2.3 min
180 L/4	- IEC 180	30 / 22	552				1.9 min
200 L/4	- IEC 200	40 / 30	772	R65	55	1250	6.3 min
225 S/4	- IEC 225	50 / 37.5	1103		60		5.2 min
225 M/4	- IEC 225	60 / 45	1103				4.2 min
250 M/4	- IEC 250	75 / 55	1544	R90	70	4800	13.5 min
280 S/4	- IEC 280	100 / 75	1544		80		9.9 min
280 M/4	- IEC 280	125 / 90	2205				8.2 min
315 S/4	- IEC 315	150 / 110	3307		85		6.7 min
315 M/4	- IEC 315	175 / 132	3307				5.6 min
315 L/4	- IEC 315	250 / 200	3307				3.7 min

Send Quote Requests to info@automatedpt.com
Call +1(800)985-6929 To Order or Order Online At Nordgearmotors.com

Send Quote Requests to info@automatedpt.com
Call +1(800)985-6929 To Order or Order Online At Nordgearmotors.com

Square Flange Servo Adapters

Servo Motor Adapter

Servo motor adapters are designed to handle the highly dynamic capabilities of servo motors. NORD servo motor adapters have a square mounting flange and are available with either a keyed (SEP) or a key-less (SEK) coupling. They are suitable for speeds up to 3000 rpm and the high torques produced by servo motors. Higher input speeds can be handled for a short duration and the bearings and input shaft are designed to cope with the high torque loads.

Servo adapter inputs are available with helical in-line, Clincher™ shaft mount, helical-bevel and helical-worm units. Compatibility and dimensions are listed in the table below.

View A
Gearbox Flange

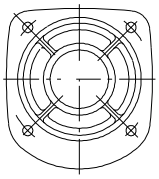

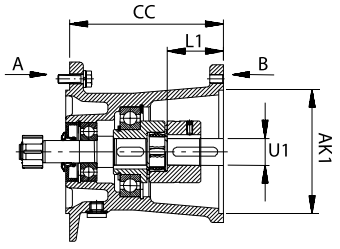

Motor Shaft with Key (SEP)

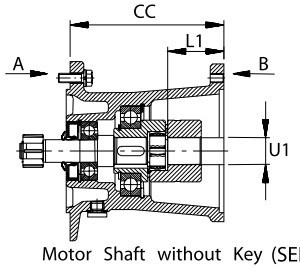

Motor Shaft without Key (SEK)

View B
Motor Flange

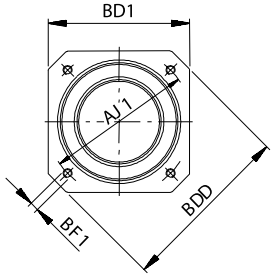

Reducer type				Servo Adapter	Units	Length	Motor Flange					Motor Shaft		Coupling	
In-line	Clincher	H-bevel	H-worm			CC	AJ1	AK1	BD1	BDD	BF1	U1	L1	Rotex	Max.Torque
SK 11 E SK 02 SK 03 SK 12	SK 1282 SK 1382 SK 2282	SK 9012.1 SK 9013.1 SK 9016.1	SK 02050 SK 13050 SK12063 SK 13063 SK 12080 SK 13080 SK 33100	-SEP 100	in	4.92	3.94	3.150	3.78	4.72	M 6	0.748	1.57	19/24	310 lb-in
				-SEK 100	mm	125	100	80	96	120		19	40		35 Nm
SK 12 SK 13 SK 23 SK 33	SK 1282 SK 2382 SK 3382	SK 9012.1 SK 9022.1 SK 9023.1 SK 9033.1	SK 02050 SK 13050 SK 12063 SK 12063 SK 12080 SK 13080 SK 33100	-SEP 130	in	5.39	5.12	4.331	4.96	6.50	M 8	0.945	1.97	24/28	310 lb-in
				-SEK 130	mm	137	130	110	126	165		24	50		35 Nm
				-SEP 165	in	5.98	6.50	5.118	6.50	7.32	M 10	1.260	2.28	28/38	841 lb-in
				-SEK 165	mm	152	165	130	165	186		32	58		95 Nm
SK 21 E SK 22 SK 31 E SK 32 SK 43 SK 53	SK 3282 SK 4382 SK 5382	SK 9032.1 SK 9043.1 SK 9053.1	SK 32100 SK 43125	-SEP 130	in	5.94	5.12	4.331	4.96	6.10	M 8	0.945	1.97	24/28	310 lb-in
				-SEK 130	mm	151	130	110	126	155		24	50		35 Nm
				-SEP 165	in	6.57	6.50	5.118	6.10	7.32	M 10	1.260	2.28	28/38	841 lb-in
				-SEK 165	mm	167	165	130	155	186		32	58		95 Nm
				-SEP 215	in	7.40	8.46	7.087	7.56	9.45	M 12	1.496	3.15	28/38	841 lb-in
				-SEK 215	mm	188	215	180	192	240		38	80		95 Nm
SK 41 E SK 42 SK 51 E SK 52 SK 63	SK 4282 SK 5282 SK 6382	SK 9042.1 SK 9052.1	SK 42125	-SEP 215	in	9.06	8.46	7.087	7.56	9.45	M 12	1.496	3.15	48	2,744 lb-in
				-SEK 215	mm	230	215	180	192	240		38	80		310 Nm
				-SEP 300	in	9.13	11.81	9.843	10.24	13.78	M 16	1.890	3.23	48	2,744 lb-in
				-SEK 300	mm	232	300	250	260	350		48	82		310 Nm
SK 62 SK 72 SK 73 SK 82 SK 83 SK 92 SK 93	SK 6282 SK 7282 SK 7382 SK 8282 SK 8382 SK 9382	SK 9062.1 SK 9072.1 SK 9082.1 SK 9086.1		-SEP 300	in	9.84	11.81	9.843	10.24	13.78	M 16	1.890	3.23	48	2,744 lb-in
				-SEK 300	mm	250	300	250	260	350		48	82		310 Nm

INPUT SECTION

Send Quote Requests to info@automatedpt.com
Call +1(800)985-6929 To Order or Order Online At Nordgearmotors.com

Send Quote Requests to info@automatedpt.com Call +1(800)985-6929 To Order or Order Online At Nordgearmotors.com

Top Motor Mount Platform

Some applications require the motor to be mounted on top of the reducer with a belt drive connection from the motor to the reducer. MK platforms can be bolted-on to all UNICASE™ gearboxes in any mounting position and offer the following advantages:

- Light, vibration inhibiting aluminum construction
- Corrosion resistant, easily adjustable mechanism for belt tensioning
- Corrosion resistant fasteners
- Available in all mounting positions
- Can be swung 90° to the right or left
- Platform has multiple bolt patterns for various motor sizes

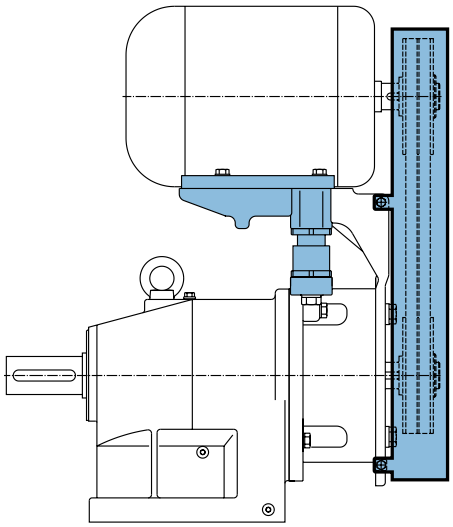

Motor platforms are pre drilled and tapped to bolt on a standard NEMA footed motor. Each platform has belt tension adjusters. See dimension DH for the adjustability range. Motor, belts, sheaves and guard are supplied by the customer.

Availability and nomenclature for each type of speed reducer with top mount platform combination is shown in the chart. Consult NORD for final selection.

Top Motor Mount Platform Availability

Reducer Type				Motor Platform Description								
				-MKN56	-MKN140	-MKN180	-MKN210	-MKN250T	-MKN280	-MKN320	-MKN360	-MKN400
				NEMA Footed Motor Frame Size								
				56	143T 145T	182T 184T	213T 215T	254T 256T	284T 286T	324T 326T	364T 365T	404T 405T
In-line	Clincher™	Bevel	Worm	HP								
				1.5	1.5 2	3 5	7.5 10	15 20	25 30	40 50	60 75	100 125
SK 11 E SK 02 SK 03 SK 12 SK 13 SK 23 SK 33	SK 1282 SK 1382 SK 2282 SK 2382 SK 3382	SK 9012.1 SK 9013.1 SK 9016.1 SK 9022.1 SK 9023.1 SK 9033.1	SK 02050 SK 13050 SK 12063 SK 13063 SK 12080 SK 13080	X	X							
SK 21 E SK 22 SK 31 E SK 32 SK 43 SK 53	SK 3282 SK 4382 SK 5382	SK 9032.1 SK 9043.1 SK 9053.1	SK 32100 SK 43125	X	X	X	X					
SK 41 E SK 42 SK 51 E SK 52 SK 63	SK 4282 SK 5282 SK 6382	SK 9042.1 SK 9052.1	SK 42125		X	X	X	X				
SK 62 SK 72 SK 73 SK 82 SK 83 SK 92 SK 93	SK 6282 SK 7282 SK 7382 SK 8282 SK 8382 SK 9282 SK 9382	SK 9072.1				X	X	X	X	X		
SK 82 SK 92 SK 102 SK 103	SK 8282 SK 9282 SK 10282 SK 10382	SK 9082.1 SK 9086.1							X	X	X	X

Send Quote Requests to info@automatedpt.com
Call +1(800)985-6929 To Order or Order Online At Nordgearmotors.com

Top Motor Mount

Top Motor Mount Platform

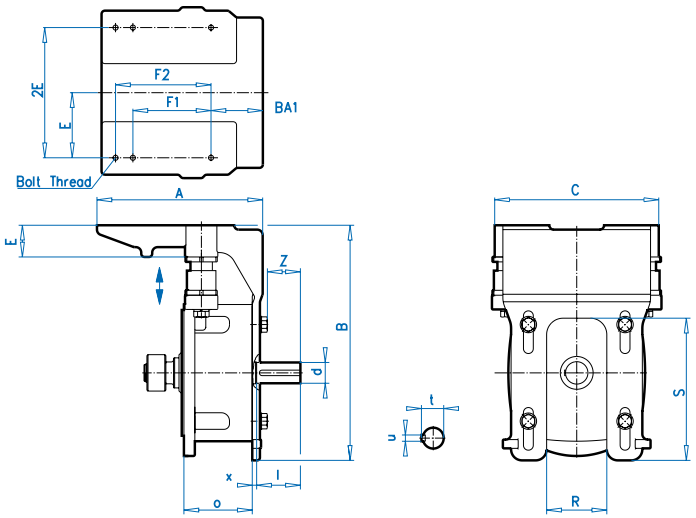

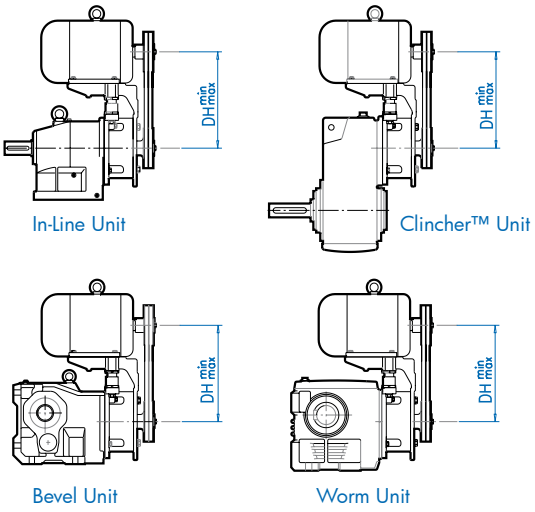

Reducer Type				MK Platform	F1	F2	BA1	Bolt Thread	E	2E	A	B	C	G	H	O	R	S	Z
Helical In-line	Clincher™ Shaft Mount	Helical Bevel	Helical Worm																
SK 11 E	SK 1282	SK 9012.1	SK 02050	56	3	5	2.87	5/16-18	2.44	4.88	8.74	9.96	8.03	1.77	6.02	4.70	2.36	5.51	1.61
SK 02	SK 1382	SK 9013.1	SK 13050	140T	4	5	2.37	5/16-18	2.75	5.50									
SK 03	SK 2382	SK 9016.1	SK 12063																
SK 12	SK 3382	SK 9022.1	SK 13063																
SK 13		SK 9023.1	SK 12080																
SK 23		SK 9033.1	SK 13080																
SK 33																			
SK 21 E	SK 2282	SK 9032.1	SK 32100	56	3	5.5	2.98	5/16-18	2.44	4.88	9.29	12.60	9.84	1.97	7.83	4.47	2.60	5.71	1.89
SK 22	SK 3282	SK 9043.1	SK 43125	140T	4	5	2.48	5/16-18	2.75	5.50									
SK 31 E	SK 4382	SK 9053.1		180T	4.5	5	2.48	3/8-16	3.75	7.50									
SK 32	SK 5382			213T	5.5	–	3.38	3/8-16	4.25	8.50									
SK 43				215T	–	7	3.38	3/8-16	4.25	8.50	11.52	13.47							
SK 53																			
SK 41 E	SK 4282	SK 9042.1	SK 42125	140T	4	4.5	2.68	5/16-18	2.75	5.50	11.93	16.93	11.81	2.28	10.00	4.92	4.33	10.24	2.40
SK 42	SK 5282	SK 9052.1		180T	4.5	5.5	3.18	3/8-16	3.75	7.50									
SK 51 E	SK 6382			210T	5.5	7	3.93	3/8-16	4.25	8.50									
SK 52				250T	8.25	10	4.65	1/2-13	5	10	15.90	17.68	12.50						
SK 63				250T	8.25	10	4.65	1/2-13	5	10	15.90	17.68	12.50						
SK 62	SK 6282	SK 9072.1		180T	4.5	5.5	3.26	3/8-16	3.75	7.50	18.74	20.87	15.75	2.95	12.40	9.92	5.12	12.40	4.57
SK 72	SK 7282			210T	5.5	7	4.01	3/8-16	4.25	8.50									
SK 73	SK 7382			250T	8.25	10	4.76	1/2-13	5	10									
SK 82	SK 8282			280T	9.5	11	5.26	1/2-13	5.5	11									
SK 83	SK 8382			320T	10.5	12	5.76	5/8-11	6.25	12.5									
SK 92	SK 9282																		
SK 93	SK 9382																		
SK 82	SK 8282	SK 9082.1		280T	9.5	11	5.26	1/2-13	5.5	11	26.06	27.17	23.70	4.13	18.31	9.65	15.04	14.37	4.67
SK 92	SK 9282	SK 9086.1		320T	10.5	12	5.76	5/8-11	6.25	12.5									
SK 102	SK 10282			360T	11.25	12.25	6.39	5/8-11	7	14									
SK 103	SK 10382			400T	12.25	13.75	7.13	3/4-10	8	16									

INPUT SECTION

Send Quote Requests to info@automatedpt.com
Call +1(800)985-6929 To Order or Order Online At Nordgearmotors.com

Send Quote Requests to info@automatedpt.com
Call +1(800)985-6929 To Order or Order Online At Nordgearmotors.com

Top Motor Mount Platform

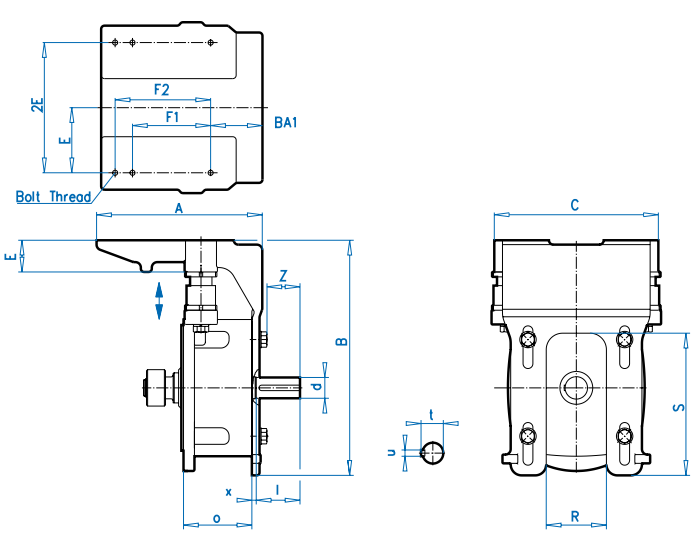

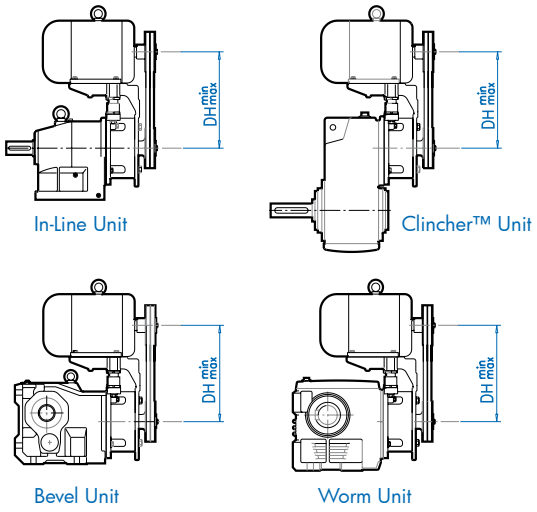

Reducer Type				MK Platform	DHmin	DHmax	d [mm]	l [mm]	t [mm]	u [mm]	x [mm]
Helical In-line	Clincher™ Shaft Mount	Helical Bevel	Helical Worm								
SK 11 E	SK 1282	SK 9012.1	SK 02050	56	9.51	10.31	24	50	27	8	8
SK 02	SK 1382	SK 9013.1	SK 13050	140T	9.51	10.31					
SK 03	SK 2282	SK 9016.1	SK 12063								
SK 12	SK 2382	SK 9022.1	SK 13063								
SK 13	SK 3382	SK 9023.1	SK 12080								
SK 23		SK 9033.1	SK 13080								
SK 33											
SK 21 E	SK 3282	SK 9032.1	SK 32100	56	11.34	12.32	28	60	31	8	9
SK 22	SK 4382	SK 9043.1	SK 43125	140T	11.34	12.32					
SK 31 E	SK 5382	SK 9053.1		180T	12.34	13.32					
SK 32				213T	13.09	14.07					
SK 43				215T	13.96	14.94					
SK 53											
SK 41 E	SK 4282	SK 9042.1	SK 42125	140T	13.5	14.76	38	80	41	10	8
SK 42	SK 5282	SK 9052.1		180T	14.5	15.76					
SK 51 E	SK 6382			210T	15.25	16.51					
SK 52				250T	17.0	18.26					
SK 63				250T	17.0	18.26					
SK 62	SK 6282	SK 9072.1		180T	16.9	18.48	65	140	69	18	8
SK 72	SK 7282			210T	17.65	19.23					
SK 73	SK 7382			250T	18.65	20.23					
SK 82	SK 8282			280T	19.4	20.98					
SK 83	SK 8382			320T	20.4	21.98					
SK 92	SK 9282										
SK 93	SK 9382										
SK 82	SK 8282	SK 9082.1		280T	25.31	27.28	65	140	69	18	12
SK 92	SK 9282	SK 9086.1		320T	26.31	28.28					
SK 102	SK 10282			360T	27.31	29.28					
SK 103	SK 10382			400T	28.31	29.28					

Send Quote Requests to info@automatedpt.com
Call +1(800)985-6929 To Order or Order Online At Nordgearmotors.com

Send Quote Requests to info@automatedpt.com Call +1(800)985-6929 To Order or Order Online At Nordgearmotors.com

Scoop Motor Platform

Scoop Motor Platform

Used in industries where quick change of commonly stocked NEMA footed motors is standard practice. NORD Scoops are slotted to allow for motor positioning. An elastomeric coupling and bolt on coupling guard are included. Motors are typically supplied by the customer and must be shimmed to match the shaft height. NORD can supply the motor fully installed.

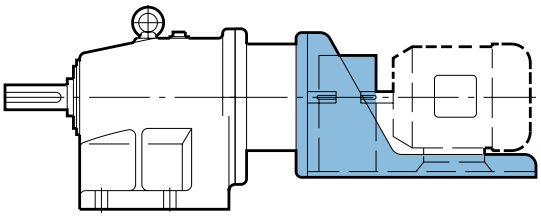

Scoop motor platforms offer the following advantages.

- Heavy duty fabricated steel construction
- Vibration free torsionally stiff design
- Available for mounting in all positions
- Can be swung 90° to the right or left
- Directly mount standard NEMA footed motor
- Motor coupling and safety guard are included

Each Scoop Motor Platform has slotted holes allowing a standard NEMA footed motor to be attached.

Scoop Availability

Reducer Type				Motor Platform Description							
				-S56	-S140T	-S180T	-S210T	-S250T	-S280T	-S320T	-S360T
				NEMA Footed Motor Frame Size							
				56	143T 145T	182T 184T	213T 215T	254T 256T	284T 286T	324T 326T	364T 365T
				HP							
In-line	Clincher™	Bevel	Worm	1.5	1.5 2	3 5	7.5 10	15 20	25 30	40 50	60 75
SK 11 E SK 02 SK 03 SK 12 SK 13 SK 23 SK 33	SK 1282 SK 1382 SK 2282 SK 2382 SK 3382	SK 9012.1 SK 9013.1 SK 9016.1 SK 9022.1 SK 9023.1 SK 9033.1	SK 02050 SK 13050 SK 12063 SK 13063 SK 12080 SK 13080	X	X						
SK 21 E SK 22 SK 31 E SK 32 SK 43 SK 53	SK 3282 SK 4382 SK 5382	SK 9032.1 SK 9043.1 SK 9053.1	SK 32100 SK 43125	X	X	X	X				
SK 41 E SK 42 SK 51 E SK 52 SK 63	SK 4282 SK 5282 SK 6382	SK 9042.1 SK 9052.1	SK 42125		X	X	X	X			
SK 62 SK 72 SK 73 SK 82 SK 83 SK 92 SK 93	SK 6282 SK 7282 SK 7382 SK 8282 SK 8382 SK 9282 SK 9382	SK 9072.1				X	X	X	X	X	
SK 82 SK 92 SK 102 SK 103	SK 8282 SK 9282 SK 10282 SK 10382	SK 9082.1 SK 9086.1				X	X	X	X	X	X

INPUT SECTION

Send Quote Requests to info@automatedpt.com
Call +1(800)985-6929 To Order or Order Online At Nordgearmotors.com

Send Quote Requests to info@automatedpt.com
Call +1(800)985-6929 To Order or Order Online At Nordgearmotors.com

Scoop Motor Platform

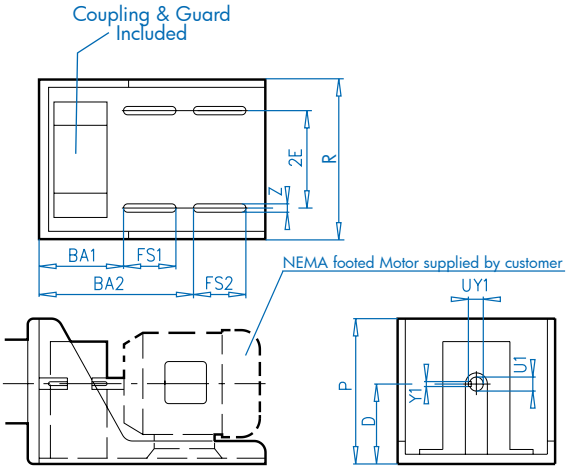

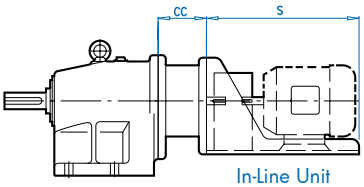

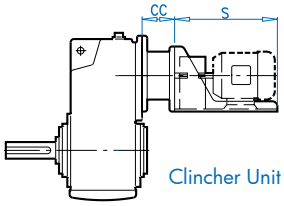

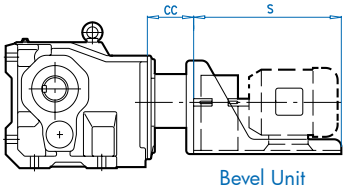

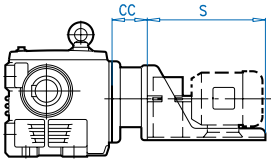

Reducer Type				Scoop	CC	S	P	D	R	2E	Z	BA1	FS1	BA2	FS2	U1	Y1Z	UY1
In-line	Clincher™	Bevel	Worm															
SK 11 E	SK 1282	SK 9012.1	SK 02050	-S 56	2.91	13.0	6.8	3.5	8.4	4.9	0.44	6.0	3.0	9.5	3.0	0.625	0.188	0.71
SK 02	SK 1382	SK 9013.1	SK 13050	-S 140 T	4.47	14.0	6.8	3.5	8.4	5.5	0.44	4.8	4.0	9.3	3.8	0.875	0.188	0.96
SK 03	SK 2282	SK 9016.1	SK 12063															
SK 12	SK 2382	SK 9022.1	SK 13063															
SK 13	SK 3382	SK 9023.1	SK 12080															
SK 23		SK 9033.1	SK 13080															
SK 33																		
SK 21 E	SK 3282	SK 9032.1	SK 32100	-S 56	2.91	13.0	6.8	3.5	8.4	4.9	0.44	6.0	3.0	9.5	3.0	0.625	0.188	0.71
SK 22	SK 4382	SK 9043.1	SK 43125	-S 140 T	4.47	14.0	6.8	3.5	8.4	5.5	0.44	4.8	4.0	8.3	3.8	0.875	0.188	0.96
SK 31 E	SK 5382	SK 9053.1		-S 180 T	4.47	19.6	8.0	4.5	10.4	7.5	0.44	7.3	2.5	12.3	2.5	1.125	0.250	1.24
SK 32				-S 210 T	4.47	20.0	8.9	5.25	12.0	8.5	0.44	8.4	3.0	14.0	4.0	1.375	0.312	1.52
SK 43																		
SK 53																		
SK 41 E	SK 4282	SK 9042.1	SK 42125	-S 140 T	4.88	14.8	8.8	3.5	9.5	5.5	0.44	6.8	3.0	10.8	3.5	0.875	0.188	0.96
SK 42	SK 5282	SK 9052.1		-S 180 T	4.92	20.0	9.8	4.5	10.4	7.5	0.44	8.5	3.8	13.3	4.5	1.125	0.250	1.24
SK 51 E	SK 6382			-S 210 T	4.92	22.0	11.6	5.25	12.0	8.5	0.44	8.5	5.0	14.5	6.0	1.375	0.312	1.52
SK 52				-S 250 T	4.92	27.3	12.6	6.25	14.4	10.0	0.56	9.0	5.0	18.6	6.8	1.625	0.375	1.80
SK 63																		
SK 62	SK 6282	SK 9072.1		-S 180 T	6.69	20.0	9.8	4.5	10.4	7.5	0.44	8.5	3.8	13.3	4.5	1.125	0.250	1.24
SK 72	SK 7282			-S 210 T	6.69	22.0	11.6	5.25	12.0	8.5	0.44	9.0	5.0	14.5	6.0	1.375	0.312	1.52
SK 73	SK 7382			-S 250 T	6.69	27.3	12.6	6.25	14.4	10.0	0.56	10.3	5.0	18.6	6.8	1.625	0.375	1.80
SK 82	SK 8282			-S280 T	9.29	30.0	13.3	7	16.3	11.0	0.56	12.5	5.5	22.0	7.0	1.875	0.500	2.10
SK 83	SK 8382			-S320 T	9.29	33.0	14.3	8	18.3	12.5	0.69	14.0	6.0	24.0	7.5	2.125	0.500	2.35
SK 92	SK 9282			-S 360 T	9.29	36.0	15.3	9	20.0	14.0	0.69	14.8	6.0	26.4	6.3	2.375	0.625	2.65
SK 93	SK 9382																	
SK 82	SK 8282	SK 9082.1		-S 180 T	6.69	20.0	9.8	4.5	10.4	7.5	0.44	8.5	3.8	13.3	4.5	1.125	0.250	1.24
SK 92	SK 9282	SK 9086.1		-S 210 T	9.29	22.0	11.6	5.25	12.0	8.5	0.44	9.0	5.0	14.5	6.0	1.375	0.312	1.52
SK 102	SK 10282			-S 250 T	9.29	27.3	12.6	6.25	14.4	10.0	0.56	10.3	5.0	18.6	6.8	1.625	0.375	1.80
SK 103	SK 10382			-S 280 T	9.29	30.0	13.3	7	16.3	11.0	0.56	12.5	5.5	22.0	7.0	1.875	0.500	2.10
				-S 320 T	9.29	33.0	14.3	8	18.3	12.5	0.69	14.0	6.0	24.0	7.5	2.125	0.500	2.35
				-S 360 T	9.29	36.0	15.3	9	20.0	14.0	0.69	14.8	6.0	26.4	6.3	2.375	0.625	2.65

Send Quote Requests to info@automatedpt.com
Call +1(800)985-6929 To Order or Order Online At Nordgearmotors.com

Send Quote Requests to info@automatedpt.com Call +1(800)985-6929 To Order or Order Online At Nordgearmotors.com

Flange Face Solid Input Shaft

DRIVESYSTEMS

Solid Input Shaft With Flange Housing (example SK32 – W II)

Same internal components as the Solid Input Shaft (-W) but the housing has a flat machined mounting face with metric drilled and tapped holes. Standard units are available with metric shafts.

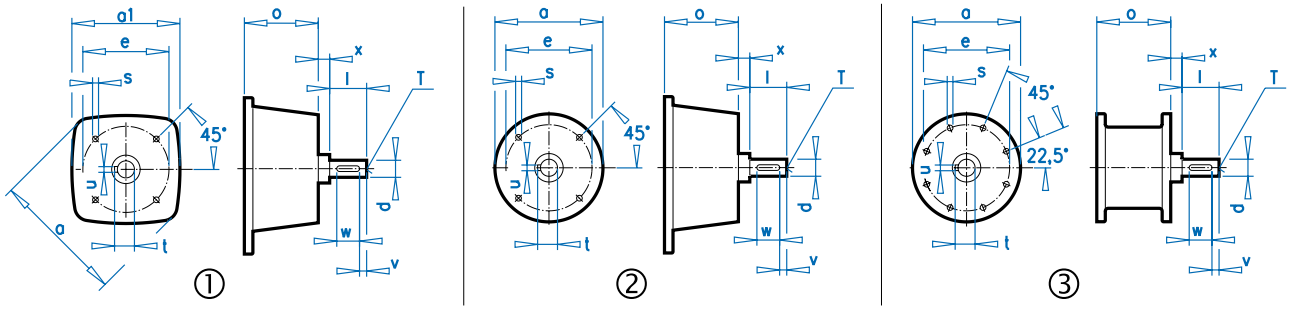

	Size	Illustration	Outline Dimensions (mm)					Shaft Dimensions (mm)							
			a	a1	e	o	s	d	l	t	v	x	u	w	T
A*	**1**	2	120	–	75	61.5	M5	14	40	16	5	8	5	30	M5
B*	**2**	2	120	–	100	61.5	M8	16	40	18	4	8	5	32	M5
C*	**3**	2	90	–	75	70.5	M5	14	38.5	16	5	2	5	30	M5
D*	**4**	2	120	–	100	74	M8	16	40	18	4	8	5	32	M5
E*	**5**	2	120	–	100	113.5	M8	16	40	18	4	8	5	32	M5
F*	**6**	2	150	–	125	119.5	M8	24	50	27	5	8	8	40	M8
G*	**7**	1	180	140	125	113.5	M8	24	50	27	5	8	8	40	M8
H*	**8**	1	180	140	125	124	M8	24	50	27	5	8	8	40	M8
I*	**9**	1	180	140	150	113.5	M10	28	60	31	5	9	8	50	M10
J*	**10**	1	180	140	150	124	M10	28	60	31	5	9	8	50	M10
K*	**11**	2	180	–	150	124	M10	28	60	31	5	9	8	50	M10
L*	**12**	1	290	250	215	125	M12	38	80	41	5	8	10	70	M12
M*	**13**	1	290	250	215	170	M12	38	80	41	5	8	10	70	M12
N*	**14**	1	290	250	250	125	M16	38	80	41	5	8	10	70	M12
O*	**15**	1	290	250	250	170	M16	38	80	41	5	8	10	70	M12
P*	**16**	1	290	250	250	170	M16	42	110	45	10	8	12	90	M16
Q*	**17**	1	350	300	300	252	M20	65	140	69	15	8	18	110	M20
R*	**18**	1	350	300	250	236	M16	42	110	45	10	8	12	90	M16
S*	**19**	1	350	300	300	236	M20	65	140	69	15	8	18	110	M20
T*	**20**	3	550	–	500	245	ø18	65	140	69	15	12	18	110	M20

*** Refers to the unit compatability tables on the following pages.**

Send Quote Requests to info@automatedpt.com
Call +1(800)985-6929 To Order or Order Online At Nordgearmotors.com

Send Quote Requests to info@automatedpt.com
Call +1(800)985-6929 To Order or Order Online At Nordgearmotors.com

Solid Input Shaft With Flange Housing (example SK32 – W II)

Same internal components as the Solid Input Shaft (-W) but the housing has a flat machined mounting face with metric drilled and tapped holes. Standard units are available with metric shafts.

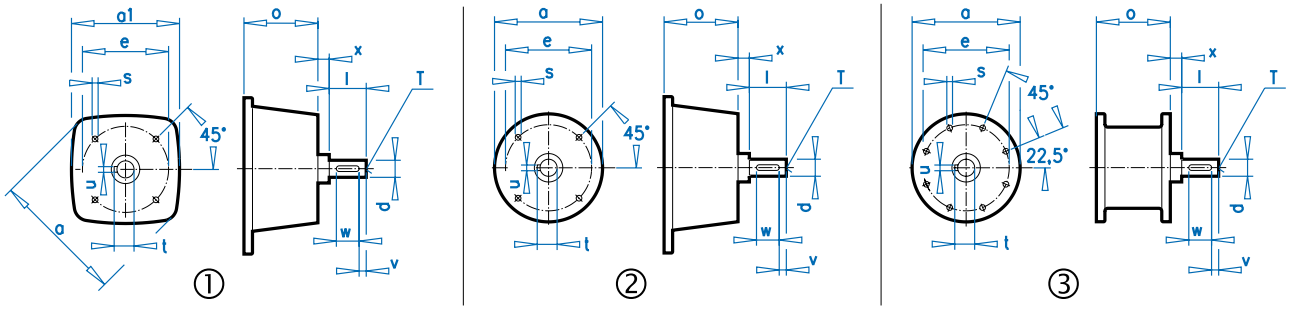

	Size	Illus-tration	Helical In-line Units			Clincher™ Units		Helical-bevel Units			Helical-worm Units	
			Single Reduction	Double Reduction	Triple Reduction	Double Reduction	Triple Reduction	Double Reduction	Triple Reduction	Quadruple Reduction	Double Reduction	Triple Reduction
A*	1	2				SK 0182NB WO	SK 1382NB WO	SK 92072 WO			SK 02040 WO	
						SK 0282NB WO		SK 92172 WO				
								SK 92372 WO				
								SK 92672 WO				
								SK 92772 WO				
B*	2	2				SK 0182NB WII	SK 1382NB WII	SK 92072 WII			SK 02040 WII	
						SK 0282NB WII		SK 92172 WII				
								SK 92372 WII				
								SK 92672 WII				
								SK 92772 WII				
C*	3	2	SK 11E W0	SK 02 WO	SK 03 WO	SK 1282 WO	SK 2382 WO		SK 9012.1 WO	SK 9013.1 WO	SK 02050 WO	SK 13050 WO
				SK 12 WO	SK 13 WO		SK 3382 WO		SK 9016.1 WO	SK 9017.1 WO	SK 12063 WO	SK 13063 WO
					SK 23 WO				SK 9022.1 WO	SK 9023.1 WO	SK 12080 WO	SK 13080 WO
					SK 33N WO					SK 9033.1 WO		SK 33100 WO
D*	4	2	SK 11E WII	SK 02 WII	SK 03 WII	SK 1282 WII	SK 2382 WII		SK 9012.1 WII	SK 9013.1 WII	SK 02050 WII	SK 13050 WII
				SK 12 WII	SK 13 WII		SK 3382 WII		SK 9016.1 WII	SK 9017.1 WII	SK 12063 WII	SK 13063 WII
					SK 23 WII				SK 9022.1 WII	SK 9023.1 WII	SK 12080 WII	SK 13080 WII
					SK 33N WII					SK 9033.1 WII		SK 33100 WII
E*	5	2	SK 21E WIII	SK 22 WIII	SK 43 WIII	SK 2282 WIII	SK 4382 WIII			SK 9043.1 WII	SK 32100 WIII	SK 43125 WIII
			SK 31E WIII	SK 32 WIII	SK 53 WIII	SK 3282 WIII	SK 5382 WIII			SK 9053.1 WII		
F*	6	2	SK 11E WIII	SK 02 WIII	SK 03 WIII	SK 1282 WIII	SK 2382 WIII		SK 9012.1 WIII	SK 9013.1 WIII	SK 02050 WIII	SK 13050 WIII
				SK 12 WIII	SK 13 WIII		SK 3382 WIII		SK 9016.1 WIII	SK 9017.1 WIII	SK 12063 WIII	SK 13063 WIII
					SK 23 WIII				SK 9022.1 WIII	SK 9023.1 WIII	SK 12080 WIII	SK 13080 WIII
					SK 33N WIII					SK 9033.1 WIII		SK 33100 WIII
G*	7	1	SK 21E WI	SK 22 WI	SK 43 WI	SK 2282 WI	SK 4382 WI		SK 9032.1 WI	SK 9043.1 WI	SK 32100 WI	SK 43125 WI
			SK 31E WI	SK 32 WI	SK 53 WI	SK 3282 WI	SK 5382 WI			SK 9053.1 WI		
H*	8	1	SK 41E WIV	SK 42 WIV	SK 63 WIV	SK 4282 WIV	SK 6382 WIV		SK 9042.1 WIV		SK 42125 WIV	
			SK 51E WIV	SK 52 WIV		SK 5282 WIV			SK 9052.1 WIV			
I*	9	1	SK 21E WII	SK 22 WII	SK 43 WII	SK 2282 WII	SK 4382 WII		SK 9032.1 WII	SK 9043.1 WII	SK 32100 WII	SK 43125 WII
			SK 31E WII	SK 32 WII	SK 53 WII	SK 3282 WII	SK 5382 WII			SK 9053.1 WII		
J*	10	1	SK 41E WI	SK 42 WI	SK 63 WI	SK 4282 WI	SK 6382 WI		SK 9042.1 WI		SK 42125 WI	
			SK 51E WI	SK 52 WI		SK 5282 WI			SK 9052.1 WI			

*** Refers to the dimensions table on page 684.**

Send Quote Requests to info@automatedpt.com
Call +1(800)985-6929 To Order or Order Online At Nordgearmotors.com

Flange Face
Solid Input Shaft

DRIVESYSTEMS

Solid Input Shaft With Flange Housing (example SK32 – W II)

Same internal components as the Solid Input Shaft (-W) but the housing has a flat machined mounting face with metric drilled and tapped holes. Standard units are available with metric shafts.

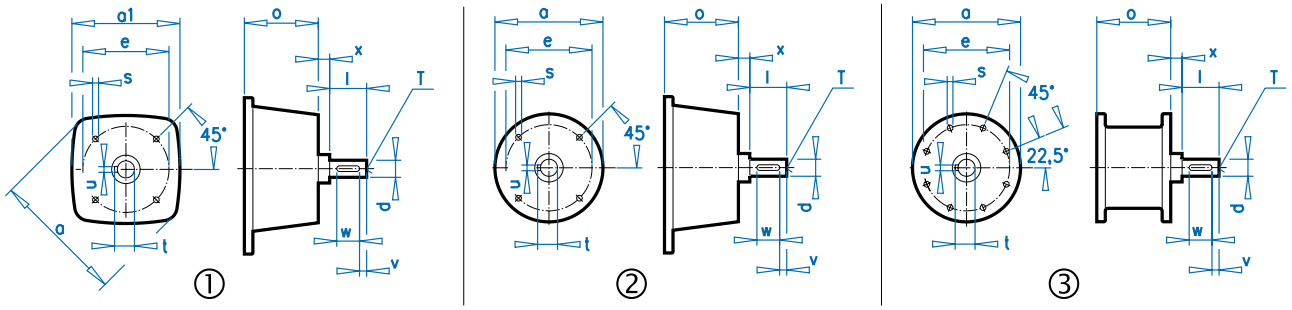

		Illustration	Helical In-line Units			Clincher™ Units		Helical-bevel Units			Helical-worm Units	
			Single Reduction	Double Reduction	Triple Reduction	Double Reduction	Triple Reduction	Double Reduction	Triple Reduction	Quadruple Reduction	Double Reduction	Triple Reduction
K*	11	2		SK 62 WO	SK 73 WO	SK 6282 WO	SK 7382 WO		SK 9062.1 WO			
				SK 72 WO	SK 83 WO	SK 7282 WO	SK 8382 WO					
					SK 93 WO		SK 9382 WO					
L*	12	1	SK 41 WII	SK 42 WII	SK 63 WII	SK 4282 WII	SK 6382 WII		SK 9042.1 WII		SK 42125 WII	
			SK 51 WII	SK 52 WII		SK 5282 WII			SK 9052.1 WII			
M*	13	1		SK 62 WI	SK 73 WI	SK 6282 WI	SK 7382 WI		SK 9062.1 WI			
				SK 72 WI	SK 83 WI	SK 7282 WI	SK 8382 WI					
				SK 82 WO	SK 93 WI		SK 9382 WI					
					SK 103 WO							
N*	14	1	SK 41E WIII	SK 42 WIII	SK 63 WIII	SK 4282 WIII	SK 6382 WIII		SK 9042.1 WIII		SK 42125 WIII	
			SK 51E WIII	SK 52 WIII		SK 5282 WIII			SK 9052.1 WIII			
O*	15	1		SK 62 WII	SK 73 WII	SK 6282 WII	SK 7382 WII		SK 9062.1 WII			
				SK 72 WII	SK 83 WII	SK 7282 WII	SK 8382 WII		SK 9082.1 WII			
				SK 82 WII	SK 93 WII	SK 8282 WII	SK 9382 WII		SK 9086.1 WII			
					SK 103 WII		SK 10382 WII					
							SK 11382 WII					
P*	16	1		SK 62 WIII	SK 73 WIII	SK 6282 WIII	SK 7382 WIII		SK 9062.1 WIII			
				SK 72 WIII	SK 83 WIII	SK 7282 WIII	SK 8382 WIII					
					SK 93 WIII		SK 9382 WIII					
Q*	17	1		SK 62 WIV	SK 73 WIV	SK 6282 WIV	SK 7382 WIV		SK 9062.1 WIV			
				SK 72 WIV	SK 83 WIV	SK 7282 WIV	SK 8382 WIV		SK 9082.1 WV			
				SK 82 WV	SK 93 WIV	SK 8282 WIV	SK 9382 WIV		SK 9086.1 WV			
				SK 92 WV	SK 103 WV		SK 10382 WIV					
R*	18	1		SK 82 WI	SK 103 WI	SK 8282 WI	SK 10382 WI		SK 9082.1 WI			
				SK 92 WI		SK 9282 WI	SK 11382 WI		SK 9086.1 WI			
				SK 102 WI			SK 12382 WI		SK 9092.1 WI			
S*	19	1		SK 82 WIII	SK 103 WIII	SK 8282 WIII	SK 10382 WIII		SK 9082.1 WIII			
				SK 92 WIII		SK 9282 WIII	SK 11382 WIII		SK 9086.1 WIII			
				SK 102 WIII			SK 12382 WIII		SK 9092.1 WIII			
T*	20	3		SK 82 WIV	SK 103 WIV	SK 8282 WIV	SK 10382 WIV		SK 9082.1 WIV			
				SK 92 WIV		SK 9282 WIV	SK 11382 WIV		SK 9086.1 WIV			
				SK 102 WIV			SK 12382 WIV		SK 9092.1 WIV			

*** Refers to the dimensions table on page 684.**

INPUT SECTION

Send Quote Requests to info@automatedpt.com
Call +1(800)985-6929 To Order or Order Online At Nordgearmotors.com

Send Quote Requests to info@automatedpt.com Call +1(800)985-6929 To Order or Order Online At Nordgearmotors.com

Custom Mounting Interface

NORD can provide custom input adapters typically consisting of a special adapter plate and special coupling to mount non-standard dimensioned motors or other devices.

When a custom input adapter is required, special attention needs to be given for each application to be sure the customer receives the performance that is necessary. The following information is required:

- Motor Dimensional Drawing
- Motor Weight
- Motor performance specifications, including torque, horsepower and operating speed ranges.

NORD engineers will review the performance requirements and make a unit selection based on given parameters.

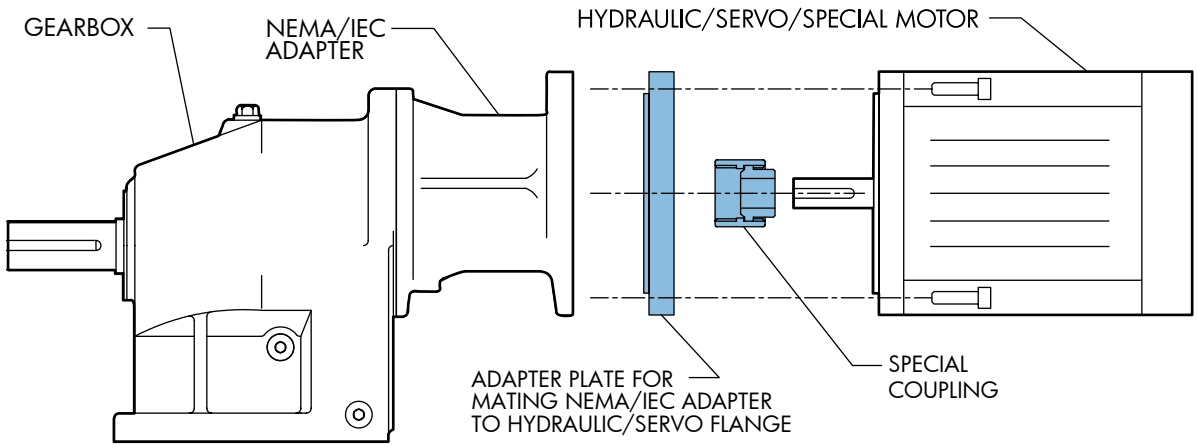

Send Quote Requests to info@automatedpt.com
Call +1(800)985-6929 To Order or Order Online At Nordgearmotors.com

Send Quote Requests to info@automatedpt.com
Call +1(800)985-6929 To Order or Order Online At Nordgearmotors.com

Notes

Send Quote Requests to info@automatedpt.com
Call +1(800)985-6929 To Order or Order Online At Nordgearmotors.com

Send Quote Requests to info@automatedpt.com
Call +1(800)985-6929 To Order or Order Online At Nordgearmotors.com

Motors

- Order Form
- NEMA C-Face Motors
- Engineering Information
- Options
- Environmental Options
- Inverter Options
- SK 300E Trio Inverter
- Additional Options
- Ratings Tables
- Dimensions
- Connection Diagrams

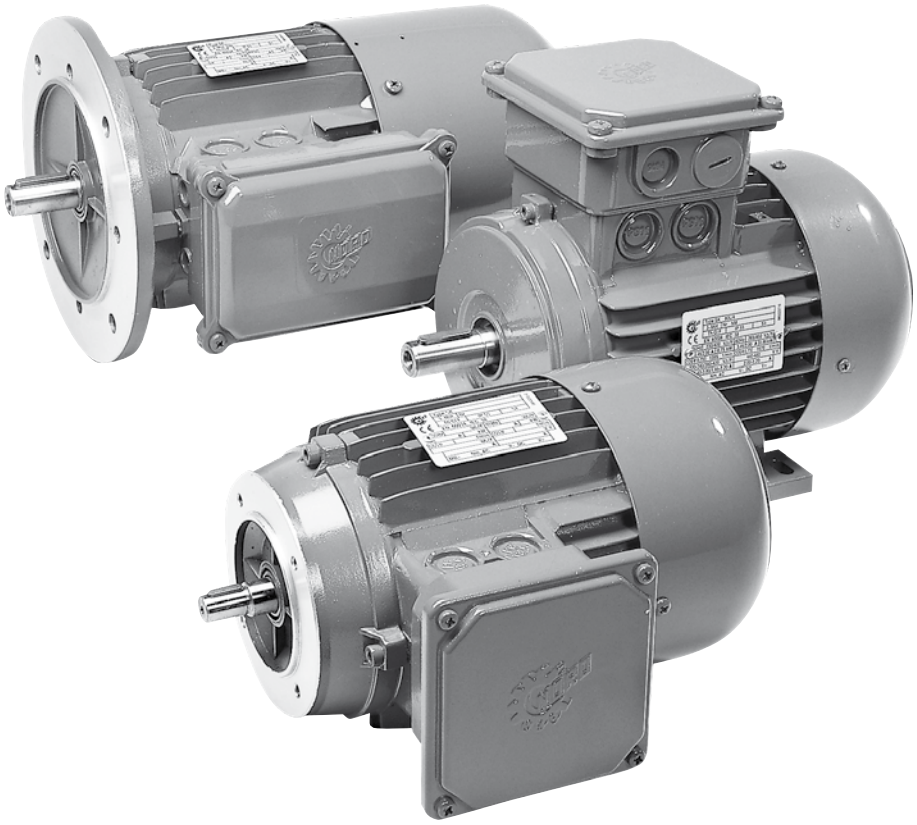

NORD® DRIVESYSTEMS

www.nord.com



Motor Type	Power Pn		Nn Full-load	In Full-Load Current 230V[a]	In Full-Load Current 460V[a]
	[hp]	[kW]	[rpm]	[A]	[A]
63S/4	0.16	0.12	1700	0.88	0.44
63L/4	0.25	0.18	1680	1.12	0.56
71S/4	0.33	0.25	1710	1.56	0.78
71L/4	0.5	0.37	1720	1.90	0.95
80S/4	0.75	0.55	1710	2.70	1.35
80L/4	1	0.75	1650	3.66	1.83
90S/4	1.5	1.1	1660	4.84	2.42
90L/4	2	1.5	1660	6.34	3.17
100L/4	3	2.2	1705	9.0	4.50
100LA/4	5	3.7	1725	15.2	7.62
132S/4	7.5	5.5	1735	19.8	9.9
132M/4	10	7.5	1735	25.8	12.9
160M/4	15	11	1770	38.4	19.2

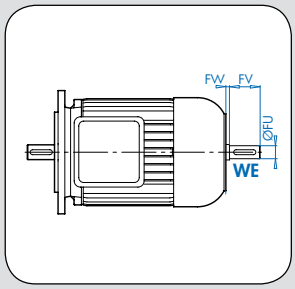

INVERTER DUTY MOTOR

Send Quote Requests to info@automatedpt.com
Call +1(800)985-6929 To Order or Order Online At Nordgearmotors.com

Motor Order Form



NORD DRIVESYSTEMS

	Frame	Size	Poles	Motor Options	Brake Size	Brake Options
SK						

Frame	Size	Poles
63	S	4
71	SH	2
80	M	6
90	MH	4-2
100	MX	8-2
112	L	8-4
132	LA	12-2
	LH	Other
	LX	

Paint

- ❍ Unpainted Aluminum Alloy
- ❍ Stainless Steel Paint
- ❍ NSD+ (gray)
- ❍ NSD+W (white)
- ❍ NSD-X3 (gray)
- ❍ NSD-X3W (white)
- ❍ Special _____

Electrical Motor Options

- ❒ **H** - Energy Efficient Motor
- ❒ **TW** - Thermostat
- ❒ **TF** - Thermistor
- ❒ **SH** - Space Heater (select voltage)
  - ❍ 110 Volt ❍ 230 Volt ❍ 460 Volt
- ❒ **ISO** H - Class H insulation
- ❒ **WU** - High Resistance Rotor
- ❒ **4-2** - 2-Speed, 4/2 Pole, 1800/3600rpm
- ❒ **8-2** - 2-Speed, 8/2 Pole, 900/3600rpm
- ❒ **ECR** - Single Phase Motor

Environmental Options

- ❒ **NSD+** - Nord Severe Duty Paint
- ❒ **NSDx3** - Nord Extreme Duty Paint
- ❒ **RD** - Canopy Drip Cover
- ❒ **RDD** - Double Fan Cover
- ❒ **KB** - Condensation Drain Holes (plugged)
- ❒ **KBO** - Condensation Drain Holes (open)
- ❒ **IP66** - IP66 Enclosure Protection
- ❒ **KKV** - Terminal Box Sealed with Resin
- ❒ **AICM** - Additional Insulation
- ❒ **EP** - Epoxy Dipped Windings

Frequency Inverter Related Options

- ❒ **F** - Blower Fan (200-575V 1 & 3 Phase)
- ❒ **FC** - Blower Cooling Fan (115V, 1 Phase)
- ❒ **IG__** - Incremental Encoder
- ❒ **IG__P** - Incremental Encoder with Plug
- ❒ **AG** - Absolute Encoder

Additional Motor Options

- ❒ **OL** - Totally Enclosed Non-Ventilated (TENV)
- ❒ **OL/H** - (TENV) Without Fan Cover
- ❒ **WE** - Second Shaft Extension (Fan Side)
- ❒ **HR** - Hand Wheel
- ❒ **Z** - High Inertia Cast Iron Fan
- ❒ **RLS** - Motor Backstop (rotation viewing fan)
  - ❍ Clockwise ❍ Counter-Clockwise
- ❒ **EKK** - Small Terminal Box (not UL approved)
- ❒ **MS** - Quick Power Plug Connector

Brake Size
BRE 5
BRE 10
BRE 20
BRE 40
BRE 60
BRE 100
BRE 150

- ❒ **HL** - Hand Release Lever
- ❒ **FHL** - Locking Hand Release Lever
- ❒ **HLH** - Hand Release Lever with Hole
- ❒ **RG** - Corrosion Protected Brake
- ❒ **SR** - Dust and Corrosion Protected Brake
- ❒ **ADJ_____Nm** - Adjust Brake Torque
- ❒ **BIP66** - IP66 Brake Enclosure
- ❒ **MIK** - Micro-switch
- ❒ **BSH** - Brake Heating/Bifilar Coil
- ❒ **NRB1** - Quiet Brake Release
- ❒ **NRB2** - Quiet Brake Motor Operation
- ❒ **FBR** - Brass Foil
- ❒ **DBR** - Double Brake
- ❒ **G...P** - High Performance Rectifier
- ❒ **G...V** - Sealed Rectifier
- ❒ **IR** - Current Sensing Relay

Rectifier Selection ⇨📖 732 - 735

Rectifier Wiring

- ❍ Across the line (from motor terminal box)
- ❍ Separate power source (frequency inverter, soft starter)

Brake Supply Voltage

- ❍ 24 VDC
- ❍ 115 VAC
- ❍ 200 VAC
- ❍ 230 VAC
- ❍ 400 VAC
- ❍ 460 VAC
- ❍ 500 VAC
- ❍ 575 VAC
- ❍ Other _____

Braking Method

- ❍ Method 10
- ❍ Method 15
- ❍ Method 20
- ❍ Method 25
- ❍ Method 30
- ❍ Method 35
- ❍ Method 40
- ❍ Method 45
- ❍ Method 50
- ❍ Method 55

Hand Release Position

- ❍ HL1
- ❍ HL2
- ❍ HL3
- ❍ HL4

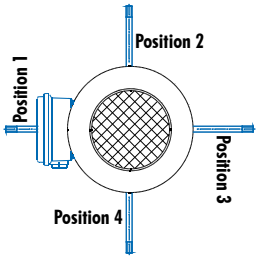

Mounting

- ❍ Integral to gearbox
- ❍ NEMA C-Face
- ❍ IEC B5 Mount

Voltage & Frequency

- ❍ 230/460V-60Hz
- ❍ 575V-60Hz
- ❍ 208V-60Hz
- ❍ 400V-50Hz
- ❍ 115/230V, 60Hz-1-ph.
- ❍ Other

Terminal Box Pos.

- ❍ TB1
- ❍ TB2
- ❍ TB3
- ❍ TB4

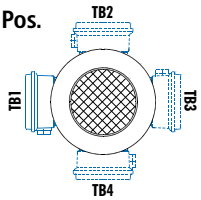

Mtg. Pos. M1 Shown

Conduit Entry Loc.

- ❍ CE I *
- ❍ CE II
- ❍ CE III *
- ❍ CE IV

* Brakemotor

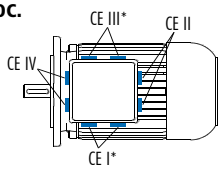

Mtg. Pos. M1 Shown

MOTORS

Send Quote Requests to info@automatedpt.com
Call +1(800)985-6929 To Order or Order Online At Nordgearmotors.com

DRIVESYSTEMS



Stocked NEMA C-Face Motors

NEMA C-Face Motors

The National Electrical Manufacturers Association (NEMA) provides standardization of electrical equipment, enabling customers to select from a range of safe, effective and compatible products. A NEMA C-face motor has a machined face with a pilot and threaded holes for direct mounting onto a NORD reducer or other industrial equipment. NORD offers NEMA C-face motors stocked as finished goods and also will assemble NEMA C-face motors to your specifications. For ratings, see page 712.

Stocked NEMA C-Face Motors

Stocked NEMA C-face motors are offered in a standard efficiency, energy efficient and in a brakemotor design. They are available in 230/460V-60Hz and 575V-60Hz up to 10 hp. Part numbers for stocked NEMA C-face motors are in the table below.

Assembled per Order NEMA C-Face Motors

NORD will assemble a NEMA C-face motor to your specifications based upon the available motor options from this catalog.

Motor Type	Power	Part Number 230/460V-60Hz	Part Number 575V-60Hz	Weight [lb]
High Performance Motors				
63S/4-56C	1/6 hp	31110012	31110013	7.9
63L/4-56C	1/4 hp	31610012	31610013	9.3
71S/4-56C	1/3 hp	32110012	32110013	11.9
71L/4-56C	1/2 hp	32610012	32610013	13.9
80S/4-56C	3/4 hp	33110012	33110013	17.6
80L/4-56C	1 hp	33610022	n/a	19.8
80L/4-143TC	1 hp	33610012	n/a	19.8
90S/4-145TC	1.5 hp	34110012	n/a	26.5
90L/4-145TC	2 hp	34610012	n/a	30.9
100L/4-182TC	3 hp	35110012	n/a	39.7
100LA/4-184TC	5 hp	35610012	n/a	46.3
132S/4-213TC	7.5 hp	36410012	n/a	97.0
132M/4-215TC	10 hp	36710012	n/a	121.3
160M/4-254TC TW	15 hp	37310012	n/a	160.9
160L/4-256TC TW	20 hp	37510012	n/a	178.6
180MX/4-284TC TW	25hp	37610012	n/a	276.3
180LX/4-286TC TW	30hp	37810012	n/a	307.2
Energy Efficient Motors				
80LH/4-56C	1 hp	33610094	33610095	19.8
80LH/4-143TC	1 hp	33610092	33610093	19.8
90SH/4-145TC	1.5 hp	34110092	34110093	26.5
90LH/4-145TC	2 hp	34610092	34610093	30.9
100LH/4-182TC	3 hp	35610092	35610093	39.7
112MH/4-184TC	5 hp	36110082	36110083	83.6
132SH/4-213TC	7.5 hp	36410092	36410093	97.0
132MH/4-215TC	10 hp	36710092	36710093	121.3
160MH/4-254TC TW	15 hp	37310092	37310093	160.9
160LH/4-256TC TW	20 hp	37510092	37510093	198.4
Brakemotors				
63S/4-56C BRE5 HL	1/6 hp	31110034 ◈	31110035 ∗	12.4
63L/4-56C BRE5 HL	1/4 hp	31610034 ◈	31610035 ∗	13.7
71S/4-56C BRE5 HL	1/3 hp	32110034 ◈	32110035 ∗	16.3
71L/4-56C BRE5 HL	1/2 hp	32610034 ◈	32610035 ∗	18.3
80S/4-56C BRE10 HL	3/4 hp	33110034 ◈	33110035 ∗	24.3
80L/4-56C BRE10 HL	1 hp	33610024 ◈	33610025 ∗	26.5
80L/4-143TC BRE10 HL	1 hp	33610034 ◈	33610035 ∗	26.5
90S/4-145TC BRE20 HL	1.5 hp	34110034 ◈	34110035 ∗	36.4
90L/4-145TC BRE20 HL	2 hp	34610034 ◈	34610035 ∗	40.8
100L/4-182TC BRE40 HL	3 hp	35110034 ◈	35110035 ∗	55.1
100LA/4-184TC BRE40 HL	5 hp	35610034 ◈	35610035 ∗	61.7
132S/4-213TC BRE60 HL	7.5 hp	36410034 ◈	36410035 ∗	123.5
132M/4-215TC BRE100 HL	10 hp	36710034 ◈	36710035 ∗	156.5
160M/4-254TC BRE 150 HL TW	15 hp	37310034 ◈	37310035 ∗	220.5
160L/4-256TC BRE 250 HL TW	20 hp	37510034 ◈	37510035 ∗	242.5

◈230/460V motors have brake systems supplied with 230VAC to a GVE20L rectifier that outputs 205VDC to the brake coil
∗ 575V motors have brake systems supplied with 575VAC to a GHE50L rectifier that outputs 250VDC to the brake coil

Send Quote Requests to info@automatedpt.com
Call +1(800)985-6929 To Order or Order Online At Nordgearmotors.com

Engineering Information
Standard Design & Construction



NORD DRIVESYSTEMS

Standards
All motors are in accordance with existing standards and regulations:

NEMA MG 1 - Motors and Generators:
- Electrical performance
- Motors for operation on variable frequency inverters

UL 1004 – Electric Motors

CSA C22.2 No. 100-04 - Motors and Generators:

Industrial Products
IEC 60034 parts 1, 5, 6, 8, 9, 11 and 14.
- Part 1 – General rules
- Part 5 – Types of enclosures
- Part 6 – Types of cooling
- Part 8 – Terminal lead designations and sense of rotation
- Part 9 – Noise limits
- Part 11 – Integrated thermal protection
- Part 14 – Mechanical vibration

IEC 60038 – Standard voltages

CE	NORD motors carry the CE mark in accordance with the Low Voltage Directive and, if installed properly, the Electromagnetic Compatibility Directive (EMC). The CE mark is required for installation in European Union (EU) states.
	Many NORD motors from frame size 63 to 315 are an Underwriters Laboratories Recognized component per UL standard 1004. Frames 63-132 File number E191510 Frames 160+ File number E227215
C SA US	The Canadian Standards Association CUS mark indicates that CSA has tested and approved NORD motors according to both US and Canadian standards. It is equivalent to the Underwriters Laboratories RU recognition mark (UL standard 1004) and the CSA mark according to CSA Standard C22.2 No. 100-04 Frames 63-132 File number LR112560 Frame 160+ File number LR13494
ee	NORD Energy Efficient motors up to frame 160 have been evaluated by the United States Department of Energy and recieved a Certificate of Compliance to certify the efficiency ratings. The certificate of compliance is CC 092B.
CSA E	NORD energy efficient motors carry the CSA energy efficiency verification mark. This mark ensures that CSA has verified that NORD motors are designed and manufactured to meet energy efficiency requirements number EEV112560.

EPAct – US Energy Efficiency

The Energy Policy Act of 1992 (EPAct) covers efficiency levels of general purpose industrial electric motors and became effective October 24, 1997. The basic goal of the law is to promote energy conservation. This law mandated energy efficiency requirements for many devices including some types of industrial electric motors. The efficiency levels are defined in NEMA MG-1 table 12-10. The regulations to implement this law have been developed by the Department of Energy (DOE).

The law covers minimum efficiency levels for general purpose motors including:

- Single-speed, polyphase NEMA T frame (and IEC equivalents)
- 1 to 200 hp (0.75 to 150 kW)
- 1200, 1800 or 3600 rpm
- NEMA design A and B
- Continuous rated
- Foot-mounted
- 230/460V-60Hz

The law excludes the following motor types from minimum efficiency levels:
- Integral gearmotors
- Brake motors

The NORD "H" line of energy efficient motors are designed to meet the efficiency levels defined by EPAct. NORD offers these motors as an option in combination with our high efficiency gear units for superior energy savings.

Efficiency levels for enclosed 4-pole motors per EPAct and NEMA MG 1 - in percent efficiency [%]

Efficiency for EPACT & NEMA MG1 4-Pole Motors

hp	1	1.5	2	3	5	7.5	10
kW	0.75	1.1	1.5	2.2	3.7	5.5	7.5
Eff%	82.5	84.0	84.0	87.5	87.5	89.5	89.5

hp	15	20	25	30	40	50	60
kW	11	15	18.5	22	30	37	45
Eff%	91.0	91.0	92.4	92.4	93.0	93.0	93.6

hp	75	100	125	150	200
kW	55	75	90	110	150
Eff%	94.1	94.5	94.5	95.0	95.0

Send Quote Requests to info@automatedpt.com
Call +1(800)985-6929 To Order or Order Online At Nordgearmotors.com

Send Quote Requests to info@automatedpt.com Call +1(800)985-6929 To Order or Order Online At Nordgearmotors.com

Canadian Energy Efficiency

The Energy Efficiency Act and the Energy Efficiency Regulations establish minimum energy performance levels for electric motors from 1 to 200 HP (0.75 to 150 kW) for sale or lease in Canada. The Energy Efficiency Regulations were developed by Natural Resources Canada (NRCan).

Certain National Electrical Manufacturers Association (NEMA) motors have been regulated since Feb. 3,1995. Effective Nov. 27, 1997, the Energy EfficiencyRegulations were amended to include International Electrotechnical Commission (IEC) motors. This amendment also increased the minimum energy performance levels that motors must meet. For explosion-proof motors and motors contained within an integral gear assembly, the effective date of the Regulations is Nov. 27, 1999.

The regulations mandate that motors carry an energy efficiency verification mark that is authorized by Standards Council of Canada (SCC) accredited certification organization such as Canadian Standards Association (CSA).

CEMEP Agreement
European Efficiency Categories

CEMEP, the association of European Electric Motor Manufacturers, has reached an agreement with the European Commission's General Directorate for Energy that in the future all 2 and 4-pole low voltage motors from 1 to 100kW will be categorized on the basis of their efficiency. The classification will be displayed on the nameplate and in catalogs. The following categories will be used: EFF1, EFF2 and EFF3.

EFF 1	Indicates a high efficiency factor.
EFF 2	Indicates an improved efficiency factor.
EFF 3	Indicates a standard efficiency factor.

NORD supplies both motors of EFF1 and EFF2 categories in its 4-pole motors. The category EFF2 motors are the standard efficiency motors and the EFF1 motors are the "H" line of energy efficient motors.

In the future NORD will mark all of its 50-Hz motor with the CEMEP efficiency symbols.

kW	1.1	1.5	2.2	3	4	5.5
hp	1.5	2	3	4	5.4	7.5
EFF1 [%]	83.3	85.0	86.4	87.4	88.3	89.2
EFF2 [%]	76.2	78.5	81.0	82.6	84.2	85.7
EFF3 [%]	<76.2	<78.5	<81.0	<82.6	<84.2	<85.7

kW	7.5	11	15	18.5	22	30
hp	10	15	20	25	30	40
EFF1 [%]	90.1	91.0	91.8	92.2	92.6	93.2
EFF2 [%]	87.0	88.4	89.4	90.0	90.5	91.4
EFF3 [%]	<87.0	<88.4	<89.4	<90.0	<90.5	<91.4

kW	37	45	55	75	90
hp	50	60	75	100	120
EFF1 [%]	93.6	93.9	94.2	94.7	95.0
EFF2 [%]	92.0	92.5	93.0	93.6	93.9
EFF3 [%]	<92.0	<92.5	<93.0	<93.6	<93.9

INVERTER DUTY MOTOR

Inverter/Vector Duty

NORD single–speed motors are Inverter/Vector Duty. The construction of the NORD motors insulating system takes into account the non-sinusoidal wave forms produced by variable frequency drives. NORD uses high grade insulating components and extra first turn protection as well as double coated wire to ensure long service life when connected to inverters. NORD motors can produce full torque at zero speed if properly sized, selected and controlled.

Send Quote Requests to info@automatedpt.com
Call +1(800)985-6929 To Order or Order Online At Nordgearmotors.com

Send Quote Requests to info@automatedpt.com Call +1(800)985-6929 To Order or Order Online At Nordgearmotors.com

Engineering Information
Standard Design & Construction



DRIVESYSTEMS

Voltage and Frequency

NORD motors are available in a wide range of voltages and frequencies for use in North America and around the world. For a more detailed list of choices see page 697.

NORD motors designed for North American voltages (230V, 460V, 208V and 575V) conform to the voltage and frequency tolerances in NEMA MG-1. The voltage tolerance is +/-10%, the frequency tolerance is +/- 5% or a combined voltage and frequency tolerance of +/-10%.

Low Inertia

The motor inertia in all NORD motors is extremely low which allows for a much more dynamic motor control capability. Low motor inertia is a significant advantage when using NORD motors with inverters or vector controllers. NORD motors can cycle more frequently and require less mechanical energy to start than standard NEMA frame motors. This leaves more energy to start the load.

High Torque

The NORD motors produce higher starting torque than required by NEMA standards. This is achieved through improved motor winding, rotor design and construction.

Non-Sparking Fan

The standard NORD motor fan is a non-sparking design. The fan will also provide proper airflow in either direction of rotation.

Terminal Block

Each NORD motor uses a terminal block, which is a superior method of wire termination when compared to pigtail leads. A terminal block ensures long-term reliability of the power connections.



Tropical Protection (Anti-fungal)

As standard the NORD motor insulation system is tropically protected. The insulating and construction components are inorganic materials so they resist fungal growth.

Insulation Class

NORD motors are constructed with a thermal class F insulating system. The motors are also designed for a class B temperature rise (80°C). The use of class F insulation with a class B temperature rise provides increased operating life. Motors constructed with class H insulation are also available as an option.

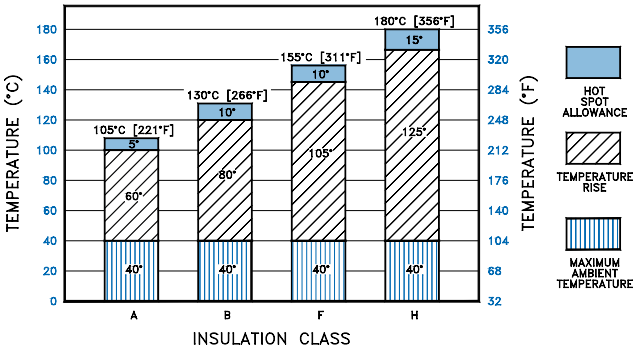

Insulation System

NORD motor insulation system is designed to provide a superior degree of protection. NORD utilizes the following insulation components:

- Magnet wire – double coated insulation
- Varnish dip impregnation
- Slot liners
- Phase paper
- Phase separators
- Top sticks
- Connecting wire sleeves

Other motor manufacturers eliminate some of these insulating components for cost reduction.

Inverter/Vector Duty – Voltage Spikes

All NORD motors are constructed with an insulating system designed to withstand the repeated voltage spikes generated by modern frequency inverters. The insulation system withstands the ratings in conformance with NEMA MG 1-2006 Section 31.4.4.2 Voltage Spikes.

$V_{peak} = 3.1 \times V_{rated}$ with a Rise time $\leq 0.1\mu s$.

MOTORS

Send Quote Requests to info@automatedpt.com
Call +1(800)985-6929 To Order or Order Online At Nordgearmotors.com

Send Quote Requests to info@automatedpt.com Call +1(800)985-6929 To Order or Order Online At Nordgearmotors.com



Ambient Temperature

NORD motors are designed to operate with a maximum ambient temperature of 40°C (104°F). If the motor's operating environment exceeds 40°C, the motor's nominal power P_n either needs to be de-rated (see table below) or use upgraded insulation.

Ambient temp [°F]	113	122	131	140
Ambient temp [°C]	45	50	55	60
De-rate factor	0.96	0.92	0.87	0.82

Motor Rated Power = [P_n x De-rate factor]

Elevation

NORD motors are designed to operate at an elevation of up to 3300 ft (1000 m) above sea level. At higher elevations the air is thinner resulting in less cooling capacity. If the motor's nominal power P_n installation elevation exceeds 3300 ft (1000 m), the motor either needs to be de-rated (see table below) or requires upgraded insulation.

Altitude [ft]	5000	6500	8200	10000	11500	13000
Altitude [m]	1500	2000	2500	3000	3500	4000
De-rate Factor	0.97	0.94	0.90	0.86	0.83	0.80

Motor Rated Power = [P_n x De-rate factor]

Service Factor

Motors rated 230/460V-60Hz and 332/575V-60Hz have a service factor of 1.15. Almost all other motors have a service factor of 1.1 or 1.0.

Starting Frequency

One major advantage of NORD motors & brakemotors is the ability to operate in high start-stop applications. Due to the motors optimized design, NORD motors can, under some conditions, cycle thousands of times an hour. This means that a NORD brakemotor can often be used to replace a clutch brake system. If the motor or brakemotoris used with an inverter or vector drive, the motor's cycling capacity can be increased even more.

The permissible frequency of switching may be calculated as follows:

Z_O no-loadstarting frequency [starts/hour]
Z_{zul} permissible starting frequency[starts/hour]
J_{mot} moment of inertia of motor [lb-in2]
J_{red} external inertia reflected to motor shaft [lb-in2]
T_a required starting torque [lb-in]
T_l load torque after starting [lb-in]

$$Z_{zul} = Z_0 \times \frac{1 - \frac{T_1}{T_a}}{1 + \frac{J_{red}}{J_{mot}}}$$

Duty Classes

The following duty types are defined in IEC 60034-1.

Duty Type	Explanation Excerpts
S1	Continuous operation at a constant load, the motor reaches thermal equilibrium
S2	Short-time operation at a constant load for a given time followed by a time of rest until the motor is completely cooled down to ambient temperature. Example: S2-10 minutes Recommended values for determination: 10, 30 minutes
S3	Intermittent operation sequential, identical run and rest cycles with constant load. Temperature equilibrium is never reached. Starting current has little effect on temperature rise. The cyclic duration factor (cdf) indicates the portion of operation time in relation to a complete duty cycle. The typical duty cycle time is 10 minutes, unless otherwise specified. Example: S3-40% Recommended values for determination: 25, 40, 60%
S6	Continuous operation with intermittent load sequential, identical cycles of running with constant load and running with no load. No rest periods. Example: S6-40% Recommended values for determination: 25, 40, 60%

Power Increasing Factor for Short-term & Intermittent Operation

Motor ratings in this catalog are based on continuous duty operation (S1). If a motor is designed for S1 duty, but is to be operated for short-time or intermittent operation it can be subjected to higher loads. The factors of "motor rated power" increases versus nominal power (P_n) are included in the following table.

Duty Type			Increasing factor
S2	Operating time	10 min	1.40
		30 min	1.15
S3	Cyclic duration factor (cdf)	25%	1.33
		40%	1.18
		60%	1.08
S6	Cyclic duration factor (cdf)	25%	1.45
		40%	1.35
		60%	1.15

Motor Rated Power = [P_n x Increasing factor]

Send Quote Requests to info@automatedpt.com
Call +1(800)985-6929 To Order or Order Online At Nordgearmotors.com

Send Quote Requests to info@automatedpt.com Call +1(800)985-6929 To Order or Order Online At Nordgearmotors.com

Engineering Information
Standard Design & Construction



Enclosure

The NORD standard motors are provided with Totally Enclosed Fan-Cooled (TEFC) with an IP55 enclosure rating. Other enclosures are available, including Totally Enclosed Non-Ventilated (TENV), Totally Enclosed Blower-Cooled (TEBC), and IP66.

The motor integral cooling fan provides proper air flow in either direction of rotation. The IEC cooling classification is IC 411 according to IEC 60034-6.

IP Enclosures per IEC 60034-5 - Simplified

	1st digit Foreign body protection		2nd digit Water protection
0	No protection	0	No Protection
1	Protected against solid objects 50mm (2 in) in diameter and larger	1	Protected against dripping water
2	Protected against solid objects 12 mm (1/2 in) in diameter and larger	2	Protected against dripping water up to a 15 degree angle
3	Protected against solid objects 2.5 mm (0.1 in) in diameter and larger	3	Protection against sprayed water
4	Protected against solid objects 1 mm (0.04 in) in diameter and larger	4	Protection against splashed water
5	Protected against dust	5	Protection against water jets
6	Dust tight	6	Protection against high pressure water jets
7	--	7	Protection against intermittent submersion in water
8	--	8	Protection against continuous submersion in water

Protective Features

All NORD Motors and Speed Reducers are constructed to provide a high degree of protection against wet and severe environments. NORD Motors and Speed Reducers are extremely well sealed against moisture ingress and use corrosion and moisture resistant components. NORD has recently made many enhancements in the motor and gear units standard construction to provide improved environmental protection. Many of the standard protection features of the NORD units are only available at an additional cost from other motor and gear drive suppliers. NORD designs all gearmotors, speed reducers and motors for installation in harsh industrial, commercial and municipal installation environments.

Standard Construction

- Shaft lip seals on both ends of the motor shafts
- Stator to endbell connections sealed to exclude moisture
- Double coated magnetic wire insulation
- Inverter/vector duty insulation system conforms to NEMA MG1-2006, section 31.4.4.2 voltage spikes
- Moisture resistant varnish dipped windings – improved varnish materials
- Inorganic insulating components for tropical protection
- Moisture resistant motor windings
- Conduit box sealed with gaskets
- Corrosion resistant alloy materials
- Threaded cable entry holes

Motors for Indoor Operation - Option Codes

	Dry Conditions	Wet or Humid Conditions
Ambient Temperature Fluctuation	–	KB, SH
Paint	–	NSD+
Vertical Motor Mount 	RD	RDD
Brakemotor	–	RG

Motors for Outdoor Operation - Option Codes

	Sheltered from the Elements	Exposed to the Elements
Ambient Temperature Fluctuation	KB, SH	KB, SH, KKV
Paint	NSD+	NSDx3
Vertical Motor Mount 	RD	RDD
Brakemotor	RG	RG

Option Code Key

KB	Condensation Drain Holes - Plugged	Page 701
SH	Space Heater	Page 699
KKV	Terminal Box Sealed with Resin	Page 701
NSD+	Nord Severe Duty Paint	Page 28
NSDx3	Nord Severe Extreme Duty X3 Paint	Page 28
RD	Canopy Drip Cover	Page 701
RDD	Double Fan Cover	Page 701
RG	Corrosion Protected Brake	Page 737

MOTORS

Send Quote Requests to info@automatedpt.com
Call +1(800)985-6929 To Order or Order Online At Nordgearmotors.com

DRIVESYSTEMS



General Options

Voltage and Frequency

NORD motors are available in a number of voltages and frequencies. The standard voltages are commonly available. Optional voltages can be provided, but may include an increase in price and additional lead time. It also may be possible to provide motors with special voltages and frequency operation points.

Standard Voltages

Single speed motors	Two speed motors
230/460V-60Hz (up to 30 hp)	460V-60Hz
460V-60Hz (40 hp and larger)	230V-60Hz
575V-60Hz	575V-60Hz
400V-50Hz	400V-50Hz

Optional Voltages

Single speed motors	Two speed motors
208V-60Hz (up to 10 hp, not available in energy efficient design)	Other voltages & frequencies available upon request
380V-50Hz	
415V-50Hz	
380V-60Hz	
Other voltages & frequencies available upon request	

Poles / speeds

NORD offers a variety of single speed and two speed motors in addition to the standard 4 pole motor. NORD single speed motors are inverter/vector duty rated, however, it is not recommended to run a NORD two speed motor with a frequency inverter.

Number of Poles	Synchronous Speed at 60Hz	Synchronous Speed at 50Hz	Notes:
Single Speed Motors			
4	1800 rpm	1500 rpm	–
2	3600 rpm	3000 rpm	–
6	1200 rpm	1000 rpm	–
Two Speed Motors			
4-2	1800/3600 rpm	1500/3000 rpm	Single winding
8-2	900/3600 rpm	750/3000 rpm	Two winding
8-4	900/1800 rpm	750/1500 rpm	Single winding

Other speeds available upon request.

Motor Options & Construction

NORD motors are stocked in one of two ways. The first method is to stock a complete motor that is ready to be assembled to a gear reducer or shipped as a stand alone motor. The second method, the motor is assembled from component parts. The Mod next to a motor option designates that the option can be added to a complete motor by simple modification. The Build next to a motor option indicates that the motor will need to be built from component parts in order to incorporate the motor option.

US Canadian Standard (CUS)

CUS motor construction defines that NORD motors are constructed in accordance to UL 1004 (electric motors) and CSA C22.2 No. 100-04 (motors and generators) guidelines. This option is standard for 208, 230, 460, and 575 Volt operation at 60 Hz.

Motors nameplated with the CUS option will be marked and indicating that the Underwriters Laboratories and CSA have tested and approved NORD motors according to both US and Canadian standards.

Send Quote Requests to info@automatedpt.com
Call +1(800)985-6929 To Order or Order Online At Nordgearmotors.com

Send Quote Requests to info@automatedpt.com Call +1(800)985-6929 To Order or Order Online At Nordgearmotors.com

General Options



DRIVESYSTEMS

Motor Protection

Selecting the appropriate motor protective system is a key factor in reliable motor operation. There are two common classes of motor protection; current based and motor temperature based. Electrical installation codes require at least two types of protection in the motors circuit, both of which are normally current based. First is short-circuit protection normally accomplished by fuses or circuit breakers. Second is "motor overload protection" this is normally a device called a "motor overload" or a "heater." Current based protection is effective in some conditions. NORD can provide two different types of motor temperature based protection, a PTC thermistor (TF) or a bi-metallic thermostat (TW). Temperature based protection is more effective motor protection in many situations, see the table below.

⬆ = Good protection ➡ = Limited protection ⬇ = No protection	Fuses	Motor Overloads	PTC Thermistor (TF)	Bi-metallic Switch (TW)
Over current up to 200%	⬇	⬆	⬆	⬆
High inertia starting	⬇	➡	⬆	➡
Frequent motor starts	⬇	➡	⬆	⬆
Stalling	➡	➡	➡	➡
Single phasing	⬇	➡	⬆	⬆
Supply voltage deviations	⬇	⬆	⬆	⬆
Supply frequency deviations	⬇	⬆	⬆	⬆
Inadequate motor cooling	⬇	⬇	⬆	⬆
Bearing Damage	⬇	⬇	⬆	⬆

Thermostat (TW)

Build

Three bimetallic switches are connected in series in the motor windings, one per motor phase. Upon reaching the limit temperature, this device automatically opens circuits. The installer is responsible to wire the thermostat into the motor control circuit. After the temperature has fallen below the trip limit, the thermostat switch re-sets automatically. The auto resetting property must be considered when designing the safety aspects of the control scheme.

TW Ratings	
NC (Normally Closed)	auto resetting
Voltage	6 to 500VAC
Current	1.6 A
Resistance	less than 50 mΩ

Thermistor (TF)

Build

Three positive temperature coefficient (PTC) thermistors are connected in series in the motor windings, one per motor phase. Thermistors require an external tripping device. Upon reaching the limit temperature, the thermistors change their resistance suddenly. In connection with a tripping device, this property is employed to monitor the motor temperature. The relay built into the tripping device has a make-and-break-contact, which is used in the control wiring. NORD does not provide the external tripping device with the TF thermistor option. You must request a thermistor tripping device separately. Many Inverters and PLCs include a built in PTC thermistor evaluation input.

TF Ratings	
Transition Temperature	150 °C +/- 5°C
Resistance < Transition	20 ... 500 . Ω
Resistance > Transition	> 4k Ω.
Reed Voltage	< 7,5 V
Rated Current	< 1 mA
Motor Ambient Temp.	40°C

Send Quote Requests to info@automatedpt.com
Call +1(800)985-6929 To Order or Order Online At Nordgearmotors.com

Send Quote Requests to info@automatedpt.com Call +1(800)985-6929 To Order or Order Online At Nordgearmotors.com



Space Heater (SH)

Build

Motors subjected to extreme temperature fluctuations or severe climatic conditions can be damaged by the formation of condensation. NORD can provide motor anti-condensation space heaters inside the motor to heat up the windings when the motor is not operating. This will prevent moisture from condensing inside the motor. The space heaters must not be switched on while the motor is running.



Space Heater Voltage Must be specified

Voltages available
❍ 115V – 50/60Hz
❍ 230V – 50/60Hz
❍ 460V – 50/60Hz
❍ other voltages available on request

Class H Insulation (ISO H)

Build

NORD motors can be manufactured with class H insulation system. Standard NORD motors include double coated magnetic wire windings. When these windings are paired with a class H insulation it provides extra temperature capacity for the motor and will lengthen the motor's life. Class H insulation rated motors are also an advantage in some severe applications:

- Increased ambient temperature installations – above 40°C (104°F)
- Increased elevation installations – above 3300 ft (1000 m)
- Applications with a high number of starts per hour.
- Meets class H insulation motor specifications
- Lower operating frequency when used with frequency inverter systems
- For additional information on insulation class see page 694.

High Resistance Rotor (WU)

Build

Using Silumin rotor material, NORD offers a high resistance rotor to soften the motors operation and allow higher overload torques.

Single Phase Motors, 60Hz (ECR)

Build

The ECR series of single phase motors is intended for demanding operation at 60Hz with a supply voltage of 115V or 230V. The permissible voltage range is 115/230V +/- 10%. The ECR motors have a 1.15 service factor and are available from 0.16 - 2 hp.

Send Quote Requests to info@automatedpt.com
Call +1(800)985-6929 To Order or Order Online At Nordgearmotors.com

Environmental Options



Paint Coatings

NORD's standard paint coating is a two component, aliphatic polyurethane finish contaning 316 stainless steel material.This gray stainless steel paint has excellent appearance and outstanding physical properties. It is suitable for both indoor and outdoor applications.

Advantages of NORD's stainless steel two component polyurethane:

- Excellent adhesion to cast iron, aluminum, steel, and plastics
- Excellent corrosion resistance
- Excellent chemical resistance
- Excellent gloss and color retention
- Suitable for indoor and outdoor exposure
- Nonporous and excellent abrasion resistance
- USDA/H1 compliant

NORD also offers a variety of severe duty paint coatings that provide a high level of protection against water and severe environments both indoors and outdoors. NSD+ (NORD Severe Duty) consists of a primer undercoat and a stainless steel polyurethane topcoat. For the most demanding environments, NORD offers NSD-X3 (NORD Severe Duty triple coated) which consists of a primer undercoat, stainless steel polyurethane coating, and a clear topcoat. Paint coatings are also available in alternate colors as seen in the table below.

Additionally a variety of coating options are available including our Severe Duty coatings:

Finish	Color	Coating	Use
Standard (stainless steel paint)	Stainless steel silver (Gray)	1 x Stainless steel (316) top coat (polyurethane)	Indoor or outdoor moderate environment
Alternate color	Black, Blue, Red, Orange	1 x Color top coat (polyurethane)	Indoor or outdoor protected
NSD+			
NORD Severe Duty + NSD+	Stainless steel silver (Gray)	1 x Primer high solid alkyd system 1 x Stainless steel (316) top coat (polyurethane)	Indoor or outdoor moderate environment
NORD Severe Duty +W NSD+W	White	1 x Primer high solid alkyd system 1 x White top coat (polyurethane)	Indoor or outdoor moderate environment
Alternate color NSD+	Black, Blue, Red, Orange	1 x Primer high solid alkyd system 1 x Color top coat (polyurethane)	Indoor or outdoor moderate environment
NSD X3			
NORD Severe Duty Extreme NSD-X3	Stainless steel silver (Gray)	1 x Primer high solid alkyd system 1 x Stainless steel (316) (polyurethane) 1 x Clear top coat (polyurethane)	Indoor or outdoor more severe environment
NORD Severe Duty Extreme NSD-X3W	White	1 x Primer high solid alkyd system 1 x White (polyurethane) 1 x Clear top coat (polyurethane)	Indoor or outdoor more severe environment
Alternate color NSD-X3	Black, Blue, Red, Orange	1 x Primer high solid alkyd system 1 x Color (polyurethane) 1 x Clear top coat (polyurethane)	Indoor or outdoor more severe environment

Special colors and paints possible please contact NORD with your specific requirements.

Send Quote Requests to info@automatedpt.com
Call +1(800)985-6929 To Order or Order Online At Nordgearmotors.com

Send Quote Requests to info@automatedpt.com Call +1(800)985-6929 To Order or Order Online At Nordgearmotors.com



Environmental Options

Condensation Drain Holes

NORD motors can be equipped with condensation drain holes. These drain holes are placed in the motor endbells at the lowest possible point. The drain holes are closed at the factory with plastic snap in plugs. They allow for condensation accumulation in the motor to drain after the closing plugs are removed.

The motor drain holes can be provided by NORD either open (KBO) or sealed with a closing plug (KB).

CAUTION

The motor must be installed in the mounting orientation specified on the nameplate or the drain holes will not function properly and may result with the motor filling with water.

Condensation Drain Holes, Plugged (KB)

Build

KB drain holes are plugged for shipment. In order for the holes to effectively drain moisture, the plugs must be removed before using the motor.

Condensation Drain Holes, Open (KBO)

Build

KBO drain holes are shipped open (not plugged).

IP66 Enclosure Protection

Mod

NORD motors can be provided with an IP66 enclosure protection. IP66 protection is suitable for wet, high-pressure wash down and extremely dusty environments, and includes all requirements included in IP65 enclosure protection.

IP	1st digit Foreign body protection	IP	2nd digit Water protection
6	Dust tight	6	Protection against high pressure water jets

Terminal Box Sealed with Resin (KKV)

Mod

Terminal boxes can be sealed with a flexible, electrically safe resin to ensure that contaminants, water, and moisture cannot pass through the terminal box into the stator body. This option is helpful in extremely dusty, wet and humid environments. Another environment where this option is helpful is in installations that have frequent large temperature swings where condensation may form.

Additional Insulation (AICM)

Build

NORD can provide additional insulation inside the motor to provide additional electrical protection in extremely wet or corrosive environments. An electrically safe insulating material is coated internally in the stator windings and on the rotor body

Epoxy Dipped Windings (EP)

Build

In extremely wet environments, the motor windings are dipped in epoxy for improved moisture protection. The motor can also be treated with the standard NORD Severe Duty + (NSD+) package for an even higher degree of protection.

Canopy Drip Cover (RD)

Mod



For wet or dirty installations where the fan end of the motor is mounted up, thus allowing water or debris to fall into the motor's fan guard, NORD offers a canopy drip cover to block this falling water or debris.

Double Fan Cover (RDD)

Mod



For wet or dirty installations where the fan end of the motor is mounted up, the NORD Double Fan Cover provides protection against falling or wind blown water, snow, dirt or debris from entering the back of the motor.

MOTORS

Send Quote Requests to info@automatedpt.com
Call +1(800)985-6929 To Order or Order Online At Nordgearmotors.com

Inverter Related Options



Blower Cooling Fan (F & FC)

Mod

NORD offers continuous running motor mounted cooling fans that provide motor cooling at low motor speeds. When a motor is operated on an inverter at low frequency, standard rotor fans do not provide adequate airflow for cooling. NORD's separate powered motor cooling fans provide that necessary airflow. These separately powered fans replace the standard motor fan cover and fan.

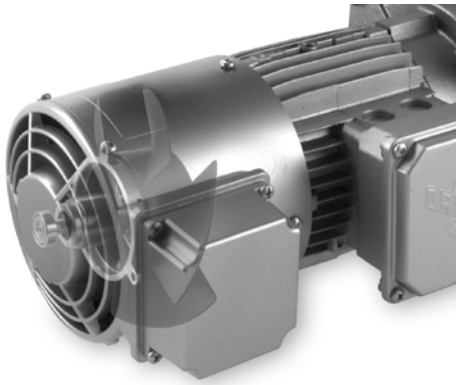

Blower Cooling Fan

Option F – 3ph & 1ph 220-575V 50/60Hz

Motor Frame	60Hz Ratings			50Hz Ratings		
	Voltage [V]	Current [A]	Power [W]	Voltage [V]	Current [A]	Power [W]
Single phase connection - ⊥ (Delta)						
63	230 – 277	0.11	38	230 – 277	0.10	27
71	230 – 277	0.12	41	230 – 277	0.10	28
80	230 – 277	0.13	44	230 – 277	0.11	29
90	230 – 277	0.25	88	230 – 277	0.26	72
100	230 – 277	0.28	88	230 – 277	0.26	70
112	230 – 277	0.31	107	230 – 277	0.26	73
132	230 – 277	0.27	89	230 – 277	0.29	82
160 - 225	230 – 277	0.41	140	230 – 277	0.45	128
Three phase low-voltage connection - (Delta)						
63	220 – 332	0.08	23	220 – 290	0.10	27
71	220 – 332	0.08	24	220 – 290	0.10	30
80	220 – 332	0.08	25	220 – 290	0.01	29
90	220 – 332	0.21	64	220 – 290	0.28	86
100	220 – 332	0.21	66	220 – 290	0.27	86
112	220 – 332	0.23	70	220 – 290	0.27	85
132	220 – 332	0.25	74	220 – 290	0.32	96
160 - 225	220 – 322	0.49	165	220 – 290	0.52	155
Three phase high-voltage connection - (Y)						
63	380 – 575	0.04	23	380 – 500	0.05	29
71	380 – 575	0.04	25	380 – 500	0.05	30
80	380 – 575	0.04	26	380 – 500	0.05	29
90	380 – 575	0.12	62	380 – 500	0.16	82
100	380 – 575	0.12	66	380 – 500	0.16	83
112	380 – 575	0.13	70	380 – 500	0.16	82
132	380 – 575	0.14	75	380 – 500	0.18	96
160 - 225	380 – 575	0.28	165	380 – 500	0.29	155

Option FC – 115V 50/60Hz 1ph

Motor Frame	60Hz Ratings			50Hz Ratings		
	Voltage [V]	Current [A]	Power [W]	Voltage [V]	Current [A]	Power [W]
Single Phase Connection - ⊥ (Delta)						
63	100 – 135	0.23	42	100 – 135	0.30	42
71	100 – 135	0.23	47	100 – 135	0.30	44
80	100 – 135	0.27	57	100 – 135	0.30	43
90	100 – 135	0.46	102	100 – 135	0.57	78
100	100 – 135	0.53	105	100 – 135	0.54	78
112	100 – 135	0.60	115	100 – 135	0.55	80

Send Quote Requests to info@automatedpt.com
Call +1(800)985-6929 To Order or Order Online At Nordgearmotors.com



Inverter Related Options

Incremental Encoder (IG..P)

Build

NORD can provide an incremental encoder mounted on the back of a motor or brake motor. Commonly encoders are used as speed or position feedback devices for use with AC drives, motion controllers or PLC's. Below are standard encoders; however, others can be supplied on request.

Encoder nomenclature must be specified.

Encoder nomenclature _____



Encoder Type: Quadrature Differential Marker pulse

M12 Connector Interface

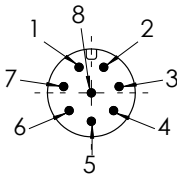

Wiring Diagram

Pin	Conn	Cord
1	0V	WH
2	+V	BN
3	A	GN
4	A\	YE
5	B	GY
6	B\	PK
7	Z	BU
8	Z\	RD
Nut	Gnd	Open

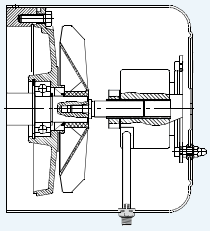

Standard Motor with Encoder

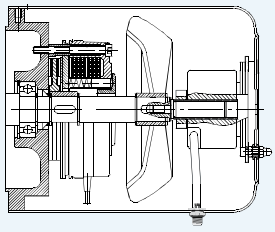

Encoder with Brake Option

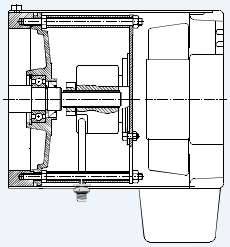

Encoder with F Type Blower Fan

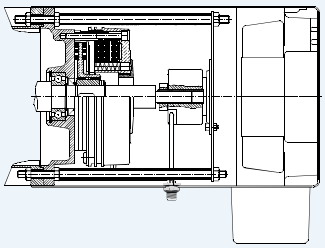

Brake Option, Blower Fan with Encoder

	IG1 P	IG4 P	IG11 P	IG41 P	IG12 P	IG42 P	IG13 P	IG43 P
Interface	TTL/RS422 (26C31)		TTL/RS422 (26C31)		HTL/Push-pull (IC-WE)		Line Driver (7272)	
Logic [VDC]	5		5		10-30		5-30	
Pulse Count [PPR]	1024	4096	1024	4096	1024	4096	1024	4096
Power Supply [VDC]	4-6	4-6	10-30	10-30	10-30	10-30	5-30	5-30
Part Number	19551500	19551520	19551502	19551522	19551501	19551521	19551503	19551523
Max Current Draw [mA]	100				150			
Max Frequency [kHz]	300							
Ambient Temperature [°F]	-4 to185							
Enclosure	IP66							
Cable	M12 8-pin male plug							

MOTORS

Pre-fabricated Encoder Cables



NORD can provide Turck pre-fabricated encoder molded cordsets (M12, 8-pin, shielded, twisted pair)

Length	In-line		Right-angle	
	NORD P/N	Turck P/N	NORD P/N	Turck P/N
2m	19551580	E-RKC 8T-264-2	19551584	E-WKC 8T-264-2
5m	19551581	E-RKC 8T-264-5	19551585	E-WKC 8T-264-5
10m	19551582	E-RKC 8T-264-10	19551586	E-WKC 8T-264-10
15m	19551583	E-RKC 8T-264-15	19551587	E-WKC 8T-264-15
Field Wireable	19551588	CMB 8180-0	-	-
Custom	order from Turck	E-RKC 8T-264-*	order from Turck	E-WKC 8T-264-*

- The above encoder cables are provided with the shielding NOT connected thru the plug nut
- Providing a conducting path thru the cable nut and attaching the shield to ground on both ends of cable is a possible source of electrical noise

Send Quote Requests to info@automatedpt.com
Call +1(800)985-6929 To Order or Order Online At Nordgearmotors.com

Send Quote Requests to info@automatedpt.com Call +1(800)985-6929 To Order or Order Online At Nordgearmotors.com

Inverter Related Options



DRIVESYSTEMS

Encoders for NORD AC Drives

NORD frequency inverters with encoder inputs are designed to use TTL/RS422 encoders. There are also advantages in using an encoder with the 10-30VDC power supply system. The NORD inverters can use a wide range of pulse counts, however the 1024PPR version provides good performance with minimal interference issues. A 4096 PPR encoder can also be used and will provide increased precision in some applications, but has some increased concerns with noise interference.

Recommended encoder: IG11P – 1024PPR/TTL/10-30VDC
Alternate encoder: IG41P – 4096PPR/TTL/10-30VDC

Absolute Encoder (AG)

Build

Absolute encoders offer a unique value (voltage, binary count, etc.) for each mechanical position. When an absolute encoder is powered up, the position of the encoder is known. Absolute encoders are available in single or multi-turn versions. The encoder is attached under the fan cover with field bus connection outside the fan cover.

Absolute encoders can be provided to meet a variety of specifications:

- Resolution: up to 17 bits of resolution per turn (131,072 steps) with 4096 turns (12 bits of turns)
- Interfaces: Synchronous serial interface (SSI), SSI with incremental track, ProfiBus, DeviceNet, CANopen, CANlift, and other interfaces

MOTORS

Send Quote Requests to info@automatedpt.com
Call +1(800)985-6929 To Order or Order Online At Nordgearmotors.com

Send Quote Requests to info@automatedpt.com Call +1(800)985-6929 To Order or Order Online At Nordgearmotors.com



NORDAC SK 300E
Motor Mounted Frequency Inverter

For select HP ratings, NORD can provide a fully programmable, high performance AC vector frequency inverter mounted on the motor. This motor mounted inverter:

- Eliminates the need to separately mount & wire the inverter
- Insures inverter/motor compatibility
- Has an IP 55 washdown duty enclosure
- Provides Electronic Motor Overload protection
- Insures smooth constant torque operation down to 2 Hz (check motor thermal limitations)
- Features a unique plug-in construction where the program stays with the motor, minimizing return to service time in the event of inverter replacement

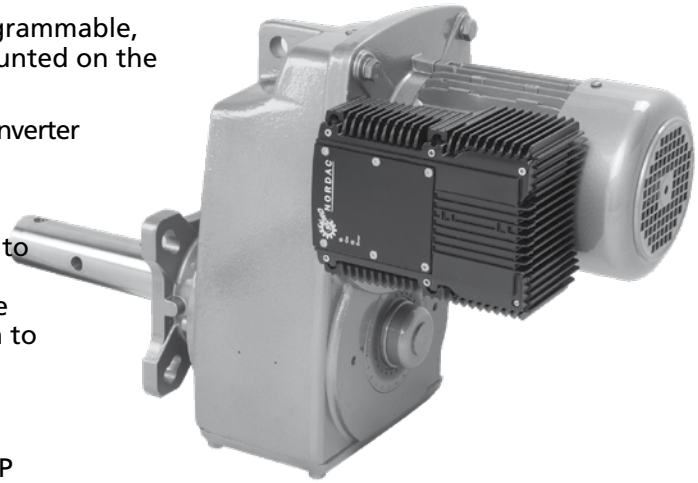

SK 300E Inverter Ratings

- 200-240 VAC 3 phase 50/60 Hz input, ½ through 3 HP
- 380-480 VAC 3 phase 50/60 Hz input, 3/4 through 5 HP
- Full range of built-in pre-engineered options available

Selection Steps

1) Choose the SK300E-trio inverter based on motor ratings and input line voltage
2) Select the required Trio Interface (TI)
3) Select the braking resistor if required
4) Select additional customer based I/O if required (SK CU2-STD)
5) Select cover mounted technology unit if required
6) If remote wall mounting is required
7) Select any needed programming tools

MOTORS

Step 1: Inverter Selection

Basic NORD Motor Description	Power Rating HP/kW	P [in]	240 VAC Input Inverter Type SK 300E	480 VAC Input Inverter Type SK 300E
63 S/4	0.16 / 0.12	5.12	-370-323-B	-550-340-B
63 L/4	0.25 / 0.18	5.12	-370-323-B	-550-340-B
71 S/4	0.33 / 0.25	5.71	-370-323-B	-550-340-B
71/L/4	0.50 / 0.37	5.71	-370-323-B	-550-340-B
80 S/4	0.75 / 0.55	6.5	-550-323-B	-550-340-B
80 L/4	1.00/ 0.75	6.5	-750-323-B	-750-340-B
90 S/4	1.50/ 1.1	7.2	-111-323-B	-111-340-B
90 L/4	2.00/ 1.5	7.2	-151-323-B	-151-340-B
100 L/4	3.00/ 2.2	7.91	-221-323-B	-221-340-B
100 LA/4	5.00/ 3.7	7.91	Not Available	-401-340-B

Inverter Ratings

Type designation SK 300E	-370-323-B	-550-323-B	-750-323-B	-111-323B	-151-323-B	-221-323-B	-550-340-B	-750-340-B	-111-340-B	-151-340-B	-221-340-B	-301-340-B	-401-340-B
Supply Voltage	3 Phase 200-240 VAC +/- 10%, 47-63 Hz						3 Phase 380-480 VAC, -20%/+10%, 47-63 Hz						
Motor Rating	1/2 HP	3/4	1 HP	1 1/2 HP	2 HP	3 HP	3/4 HP	1 HP	1 1/2 HP	2 HP	3 HP	4 HP	5 HP
Rated Output Current Amps [RMS]	2.2	3	4	5.5	7	9.5	1.6	2.2	3	3.7	5.5	7	9.2
Typical Output Current Amps [RMS]	3.1	4.2	5.6	7.7	9.8	13.3	2.5	3.1	4.2	5.2	7.7	9.8	12.9

Send Quote Requests to info@automatedpt.com
Call +1(800)985-6929 To Order or Order Online At Nordgearmotors.com

Send Quote Requests to info@automatedpt.com Call +1(800)985-6929 To Order or Order Online At Nordgearmotors.com

Inverter
SK 300E Trio



DRIVESYSTEMS

Step 2: Selection of Trio Interface (TI)

Following selection of the appropriate SK 300E inverter rating from the preceding chart, an appropriate Trio Interface (TI) must be specified. The Trio Interface (TI) is an adapter that replaces the motor conduit box and contains a circuit board that the SK 300E plugs into.

A typical TI is shown below

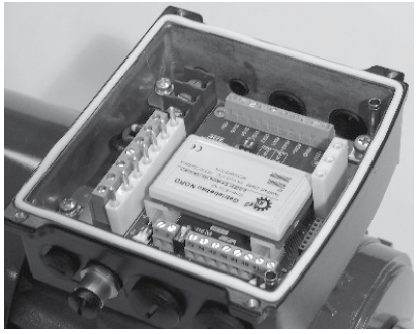

SK 300E Trio Interface (TI) Types

SK TI 0/1	For standard 380-480 VAC units
SK TI 0/1 - 230	For standard 200-240 VAC units
SK TI 0/2	For 380-480 VAC units using Harting connectors
SK TI 0/2 – 230	200-240 VAC units using Harting connectors

Harding H10E series connector options for side 1(CE1) of SK TI 0/2 (and -230) Interfaces

LE H10E	Socket for AC supply input
MA H10E	Plug for motor output

Conduit plate options for side 3(CE3) of SK TI 0/2 (and -230) Interfaces

SK DA4	Plate with 4 x M16
SK DA2	Plate with 2 x M20 and 1 x M16 (Provided as standard with SK TI 0/2)
SK DA1	Plate with 1 x M25 and 2 x M16
SK DA0	Plate with no entries

Added related components for Trio Interfaces

P/N 018524200	M20 x ½ adapter (Qty 2 provided as standard on assembled trios)
P/N 011015410	Adapter to mount Trio Interface on 63 & 71 frame motors
P/N 013097000	Gasket to mount Trio Interface on 63 & 71 frame motors

SK 300E Options & Related Information

Step 3: Braking Resistors

Braking Resistor Options for SK 300E for mounting on Trio Interface

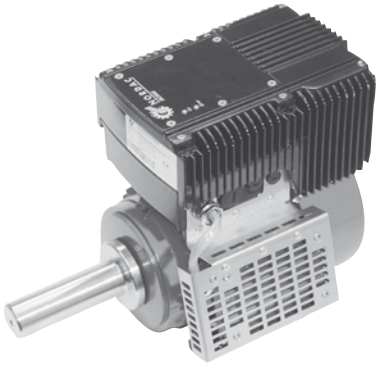

During dynamic braking, energy is delivered from the load through the motor (acting as a generator) to the frequency inverter. The inverter dissipates this energy as heat via the integral brake chopper to the optional external braking resistors.

For use with SK TI 0/1 adapters

SK BR3-120/100-TI 0/1	120 ohm/100 W for all ratings except 5 HP
SK BR3-82/200-TI 0/1	82 ohm/200 W for 5 HP only

For use with SK TI 0/2 adapters

SK BR3-120/100-TI 0/2	120 ohm/100 W for all ratings except 5 HP
SK BR3-82/200-TI 0/2	82 ohm/200 W for 5 HP only

MOTORS

Send Quote Requests to info@automatedpt.com
Call +1(800)985-6929 To Order or Order Online At Nordgearmotors.com

Send Quote Requests to info@automatedpt.com
Call +1(800)985-6929 To Order or Order Online At Nordgearmotors.com



Step 4: Customer I/O Based Control Interface Option - SK CU2-STD

The standard I/O based control available via the Trio Interface can be expanded via selection of an optional Customer Unit, **SK CU2-STD**, that plugs into the Trio Interface. Interface I/O points are listed on the following chart:



I/O on standard Trio Interface	Additional I/O on SK CU2-STD Option
1 X programmable digital input	4 X programmable digital input
5 VDC and 15 VDC power supplies	2 X single-ended analog inputs
RS 485 interface via M-12 connector and terminals	+10 VDC reference supply
1 X programmable relay output	1 X selectable/programmable analog/digital output
	PID control access

Step 5: Cover Mounted Technology Unit (TU) Options

A variety of pre-engineered plug in Technology Unit (TU) options can be ordered to replace the standard blank cover of the SK 300E inverter. Only a single TU can be installed on the inverter at a given time. Available units include operator and field bus interfaces:



Technology Unit (TU) Name	Description
SK TU2-POT	Analog reference potentiometer box with L/Off/R control switch
SK TU2-CTR	Digital control/programmer with 4 digit, 7 segment LED display
SK TU2-PBR	Profibus field bus interface
SK TU2-PBR-24V	Profibus field bus interface powered by customer 24 VDC supply
SK TU2-PBR-KL	Profibus field bus interface with clamp on connectors
SK TU2-AS1	AS (Actuator/Sensor) Interface
SK TU2-CAO	CANopen field bus interface
SK TU2-DEV	DeviceNet field bus interface
SK TU2-IBS	InterBus field bus interface
SK TU2-DECKEL	Original blank cover for TU slot (in case TU option is removed)

Step 6: Wall Mounting Option Kit, SK WMK-DA1

The wall mounting kit enables mounting the SK 300E inverter on a nearby wall or the machine instead of directly on the NORD motor or gearmotor. The Trio Interface (TI) is still required and all other options can be used.

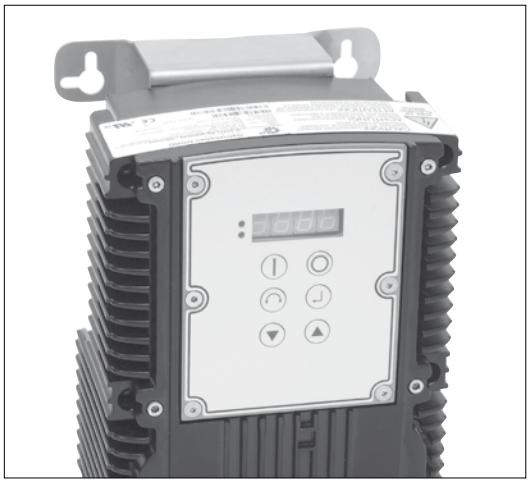

Send Quote Requests to info@automatedpt.com
Call +1(800)985-6929 To Order or Order Online At Nordgearmotors.com

Send Quote Requests to info@automatedpt.com
Call +1(800)985-6929 To Order or Order Online At Nordgearmotors.com



DRIVESYSTEMS

Step 7 : Additional Tools & Related Interface Options

In addition to the cover mounted SK TU2-CTR option, there are several additional options that enable simple programming and control of the SK 300E:

Handheld Parameter Box (P-Box) with 10 foot cable, SK PAR-2H

Detachable external add-on unit that can be used to program and display parameters and control the operation of the connected SK 300E. Features multi-line plain text display selectable in six languages. Manages and stores up to five unique inverter programs. Cable plugs into M-12 connector in side of Trio Interface.

Panel Mount Parameter Box (P-Box), SK PAR-2E

Panel Mount version of Parameter Box with same functionality as SK PAR-2H. Installs in cut-out in front of customer supplied operator panel. Interface connection is performed by customer with their shielded cable via terminals on SK PAR-2E and SK 300E.



NORD CON Software – Available free at NORD Website

NORD CON Software is a Windows-based PC program that enables the control and programming of NORDAC Frequency Inverters. It provides for accessing up to 31 Frequency Inverters simultaneously via the RS485 interface. It features both off-line and on-line programming and data management modes.

NORD CON allows user to:

- Program inverters & upload/download parameter files
- Control connected inverters for test/troubleshooting
- Monitor connected inverters and examine up to four variables versus time with built-in oscilloscope feature
- Display parameter information in six languages

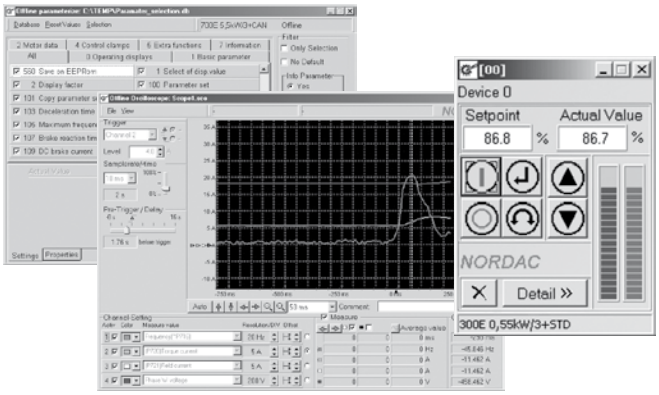

Optional accessories required to interface user PC to SK 300E via NORD CON are:

SK IC1 – RS 485 to RS 232 interface converter
Enables communication between RS 232 port on computer and RS 485 port on SK 300E

Cable SK 300E –
10 foot cable that connects between the 9-Pin D shell connector on the SK IC1 and the M-12 connector on the side of the SK 300E Trio Interface.

Electromechanical Brake Interface & Coil Voltage Selection

As standard, the SK 300E provides a dedicated high voltage DC power supply and coordination software to directly control an Electromechanical Brake. This is equivalent to using a half wave rectifier, so the brake coil voltage must be specified per the following chart:

Nominal Inverter AC Input Voltage	Brake Coil Voltage
440 – 480 VAC	205 VDC
200 – 240 VAC	105 VDC
380 – 415 VAC	180 VDC

The brake gets connected to terminals +Br and –Br on the Trio Interface

Motor overload protection

Electronic motor overload protection is provided as standard on the SK 300E inverter. If required, more precise protection can be achieved via the use of motor thermostats (TW) or thermistor sensors (TF). See page 698 for detailson these motor options. These devices can be interfaced to the SK 300E via the programmable digital input to indicate a motor over temperature error.

Send Quote Requests to info@automatedpt.com
Call +1(800)985-6929 To Order or Order Online At Nordgearmotors.com

Send Quote Requests to info@automatedpt.com Call +1(800)985-6929 To Order or Order Online At Nordgearmotors.com



Totally Enclosed Non-Ventilated (OL) Mod

NORD can provide totally enclosed non-ventilated (TENV) motor enclosure. TENV motors provide benefits in certain operating environments; such as extremely dusty or dirty applications, where cooling fans may have material accumulation, which can be detrimental to the motor and the application. The OL series of motors are the standard fan cooled motor construction including the fan cover, but provided without the fan. TENV motors can also be used to reduce cooling fan noise on a standard motor.

A TENV motor's frame size is larger then a totally enclosed fan cooled (TEFC) motor. For intermittent operation, a TENV motor can be operated at a 50% duty cycle at full rated power.

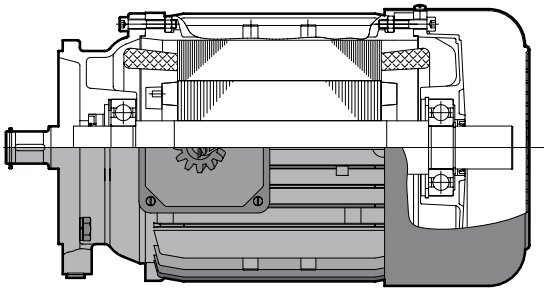

Totally Enclosed Non-Ventilated, without Fan Cover (OL/H) Build

The OL/H series of TENV motors are more compact in space than the OL series. They do not include the rotor shaft extension through the back bearing end bell or the fan cover.

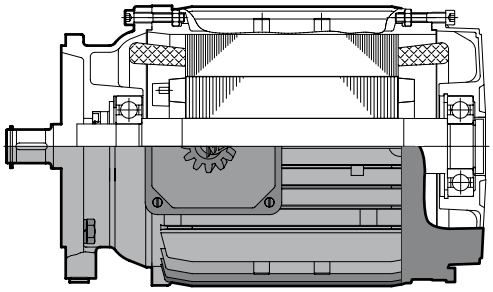

2nd Shaft Extension on Fan Side (WE) Build

NORD can provide a second shaft extension on the fan side of the motor that protrudes through the fan cover. This extension can be used as a power take-off or to mount customer supplied devices such as encoders and tachometers.

The shaft extension can be provided on both motors with and without brakes. The shaft extension can not be used on motors with blower fans (F) or (FC). For dimensions see pages 720 - 721.

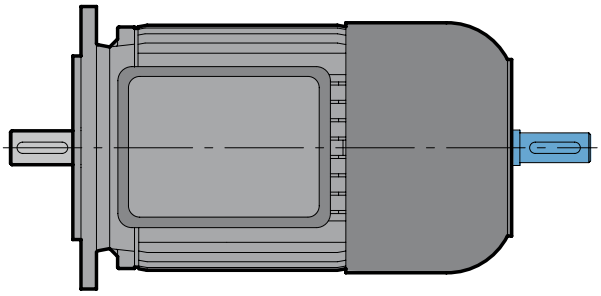

Hand Wheel (HR) Build

Motors can be supplied with a hand wheel provided on the second shaft extension. The hand wheel can be used for manual operation during power outages, or for machine positioning setup. For dimensions see pages 720 - 721.

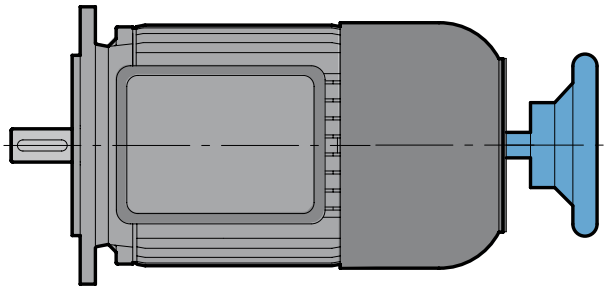

Warning

The customer is required to provide appropriate safety guarding of the rotating hand wheel.

MOTORS

Send Quote Requests to info@automatedpt.com
Call +1(800)985-6929 To Order or Order Online At Nordgearmotors.com

Additional Options



High Inertia Cast Iron Fan (Z)

Build

An optional cast iron motor cooling fan is available. This fan is used as a mechanical soft start and/or soft stop. This fan adds inertia to the motor. The high inertia fan can also be used for a flywheel effect to store mechanical energy. This can be helpful in smoothing rapid load changes. The cast iron fan replaces the standard plastic motor fan. The motor length is the same as a brakemotor.

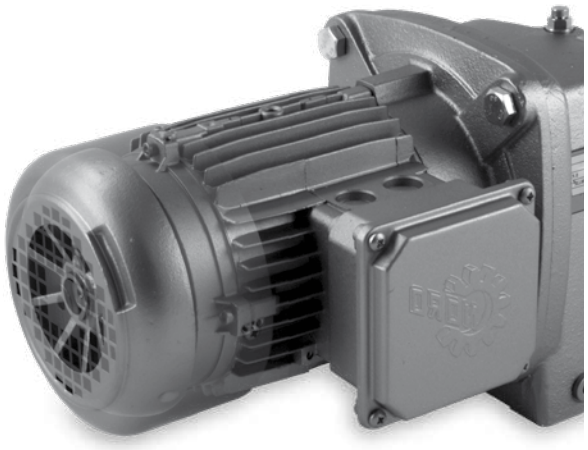

Motor Frame	Fan Inertia J_z[lb-ft²]
71	0.0475
80	0.1140
90	0.2375
100	0.2684
112	0.5653
132	0.9500

Build

Motor Backstop (RLS)

NORD can provide backstops on many motor frames. A backstop will prevent the motor from rotating in one direction. A common use is to prevent a motor from allowing a load to move backwards when power is removed. A motor brake can also be used for this same purpose.

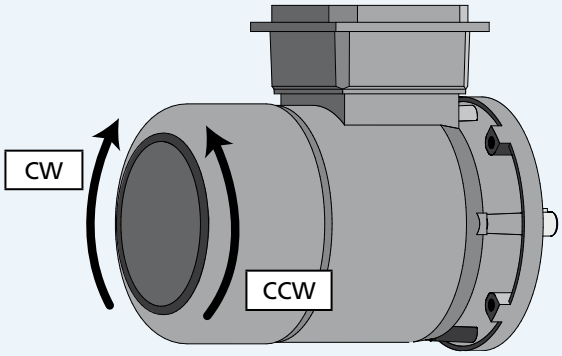

The allowable direction of rotation must be specified in the order.

Allowable Shaft Rotation
Clockwise - Back of Motor
Counter Clockwise - Back of Motor

Motor Size	Backstop Torque [lb-in]	Minimum Speed [rpm]	Motor Extension [in]
80S/L	1150	860	2.52
90S/L	1150	860	2.95
100L	1150	860	3.58
112M	3270	750	3.66
132S/M	3270	750	4.21
160M/L	7880	670	6.57
180MX/LX	7880	670	6.73
200L	9120	630	6.57
225S/M	9120	630	6.57
250M	22130	400	9.84
280S/M	51330	320	11.02

Send Quote Requests to info@automatedpt.com
Call +1(800)985-6929 To Order or Order Online At Nordgearmotors.com

DRIVESYSTEMS



Additional Options

Quick Power Plug Connector (MS)

Mod

The quick power plug connector (MS) is a simple and fast way to connect and disconnect a motor or brake motor. The MS connector is available on NORD three-phase motors from frame size 63 to 132. The motor connections are made by a modular power plug manufacturer by Harting. After the first installation, the motor can be quickly changed by simply plugging and unplugging the electrical connections. This will ensure the new motor is properly wired. This is a significant advantage to equipment builders who fabricate machinery on site and then ship to another location. The motor with the MS connector can simply be plugged in during final installation.

NORD supplies the male connector half mounted on the motor conduit box. The customer must supply the female connector half mounted on the power wiring. NORD supplies a protective plastic cover on the motor male connector half to protect from dirt and damage prior to installation.

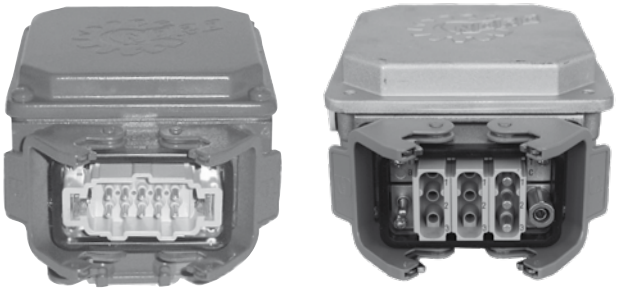

Advantages:

- Simple motor wiring
- Accurate wiring of motor at final job site
- Fast motor replacement
- Accurate wiring of replacement motor
- Ideal for portable equipment
- Reduces the required personnel for motor replacement
- Faster motor changes reduce down time

Plug ratings:

Manufacturer	Harting
Connector	HAN 10 ES/HAN 10ESS Cage Clamp Connectors
Number of Pins	10-Male
Voltage	600VAC per UL/CSA
Current	16A - Continuous

Motor Power Plug Kits:

Includes conduit box, mounting hardware and Male Harting Motor Plug

P/N	Motor size
11035350	63 + 71
13035350	80 + 90 + 100
16035350	112
16335350	132

Power Plug Positions

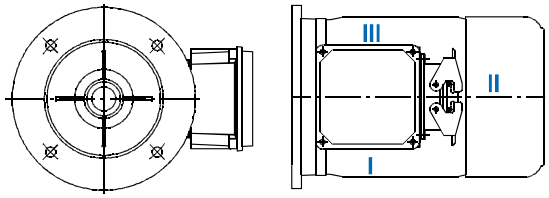

Power plug position must be specified

Power Plug Position		
❍ I	❍ II	❍ III

Small Terminal Box (EKK)

Mod

The motor terminal box can be provided as a smaller, one-piece terminal design. This option is valid for standard motors 0.16 - 10 hp and is not available for Brakemotors.

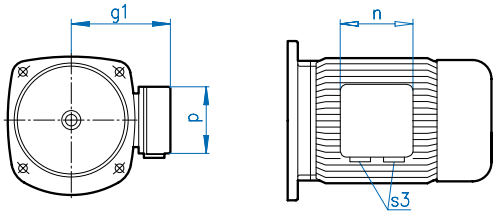

EKK Dimensions				
Motor Frame	**g1**	**n**	**p**	**S3**
63	3.94	2.95	2.95	2x M16 x 1.5
71	4.29	2.95	2.95	2x M16 x 1.5
80	4.88	3.62	3.62	2x M20 x 1.5
90	5.08	3.62	3.62	2x M20 x 1.5
100	5.51	3.62	3.62	2x M20 x 1.5
112	5.91	3.62	3.62	2x M20 x 1.5
132	6.85	4.13	4.13	2x M25 x 1.5

MOTORS

Send Quote Requests to info@automatedpt.com
Call +1(800)985-6929 To Order or Order Online At Nordgearmotors.com

Performance Data



DRIVESYSTEMS

Standard Efficiency

230/460V – 60Hz

Inverter duty • TEFC
Synchronous speed 1800rpm @ 60Hz • 4-pole • Three-phase
Voltages: 230/460V – 60Hz • 1.15 Service Factor
Continuous Duty • 40°C Ambient • up to 3300ft Elevation
Class B temperature rise • Class F insulation

Motor Type	Power Pn		Nn Full-load	In Full-Load Current 230V[a]	In Full-Load Current 460V[a]	Ia/In	Code Letter	Torque Tn	Ta/Tn	Tk/Tn	pf	Eff.	Jm Inertia
	[hp]	[kW]	[rpm]	[A]	[A]	[%]		[lb-in]				[%]	[lb-ft²]
63S/4	0.16	0.12	1700	0.88	0.44	245	F	5.92	2.1	2.2	0.66	52	0.005
63L/4	0.25	0.18	1680	1.12	0.56	275	E	8.99	2.1	2.2	0.71	57	0.0067
71S/4	0.33	0.25	1710	1.56	0.78	310	G	12.3	2.5	2.4	0.64	63	0.017
71L/4	0.5	0.37	1720	1.90	0.95	355	F	18.0	2.45	2.6	0.69	71	0.0204
80S/4	0.75	0.55	1710	2.70	1.35	355	F	27.0	2.2	2.2	0.71	72	0.0259
80L/4	1	0.75	1650	3.66	1.83	390	G	38.1	2.2	2.3	0.74	70	0.0345
90S/4	1.5	1.1	1660	4.84	2.42	445	G	55.6	2.7	2.6	0.78	73	0.055
90L/4	2	1.5	1660	6.34	3.17	465	G	75.8	2.55	2.5	0.80	74	0.074
100L/4	3	2.2	1705	9.0	4.50	490	G	108	2.3	2.6	0.81	82	0.107
100LA/4	5	3.7	1725	15.2	7.62	510	G	180	2.7	3.1	0.75	81	0.141
132S/4	7.5	5.5	1735	19.8	9.9	545	G	267	2.45	2.75	0.82	86	0.55
132M/4	10	7.5	1735	25.8	12.9	645	H	363	2.9	3.2	0.84	87	0.752
160M/4	15	11	1770	38.4	19.2	665	H	522	2.45	3.0	0.82	88	0.95
160L/4	20	15	1765	49	24.5	725	H	713	2.9	3.3	0.86	89.4	1.23
180MX/4	25	18.5	1750	60	30	860	K	887	2.95	3.4	0.87	89	1.35
180LX/4	30	22	1755	71	35.5	980	L	1052	3.4	3.7	0.87	89.4	1.35
200L/4	40	30	1780	96	48	770	J	1414	2.9	3.6	0.85	92	5.70
225S/4	50	37	1765	-	58	760	H	1759	3.1	3.5	0.86	93.1	7.60
225M/4	60	45	1770	-	70	840	J	2133	3.1	3.6	0.86	93.8	8.54
250M/4	75	55	1782	-	89	700	H	2636	2.8	3.2	0.84	93.7	16.4
280S/4	100	75	1788	-	118	830	J	3497	2.9	3.5	0.84	94.4	30.6
280M/4	125	90	1786	-	144	810	J	4385	2.8	3.3	0.86	95.1	34.9
315S/4	150	110	1788	-	176	720	H	5255	2.8	3.1	0.84	94.7	47.5
315M/4	175	132	1790	-	200	800	J	6125	3.0	3.4	0.85	95.4	58.4
315Ma/4	200	150	1790	-	230	810	J	7003	3.2	3.6	0.86	95.7	71.4
315L/4	250	187	1790	-	280	850	J	8734	3.2	3.3	0.87	96.3	92.8

a) Motors frame 225 and larger are standardly provided as single-voltage 460V and not as dual voltage

Pn - Full load power
Nn - Full load speed
In - Full load current
Ia - Locked-rotor current
Ia/In - Locked-rotor current ratio (%)
Tn - Full-load torque
Ta - Locked-rotor torque
Ta/Tn - Locked-rotor torque ratio
Tk - Break-down torque
Tk/Tn - Break-down torque ratio
pf - Power factor
Eff - Normal efficiency
Jm - Motor inertia

MOTORS

Send Quote Requests to info@automatedpt.com
Call +1(800)985-6929 To Order or Order Online At Nordgearmotors.com

DRIVESYSTEMS



Performance Data

Energy Efficient (EPAct)

230/460V – 60Hz / EE

Inverter duty • TEFC
Synchronous speed 1800rpm @ 60Hz • 4-pole • Three-phase
Voltages: 230/460V – 60Hz • 1.15 Service Factor
Continuous Duty • 40°C Ambient • up to 3300ft Elevation
Class B temperature rise • Class F insulation

Motor Type	Power Pn		Nn Full-load	In Full-Load Current 230V[a]	In Full-Load Current 460V[a]	Ia/In	Code Letter	Torque Tn	Ta/Tn	Tk/Tn	pf	Eff.	Jm Inertia
	[hp]	[kW]	[rpm]	[A]	[A]	[%]		[lb-in]				[%]	[lb-ft²]
80LH/4	1	0.75	1750	3.88	1.94	600	L	36.0	4.6	4.3	0.59	82.5	0.051
90SH/4	1.5	1.1	1740	4.3	2.15	630	J	53.1	3.5	3.8	0.76	84.0	0.085
90LH/4	2	1.5	1745	6.3	3.15	670	K	72.1	4.3	4.5	0.71	84.0	0.092
100LH/4	3	2.2	1765	8.6	4.3	790	L	105	3.6	4.7	0.73	87.5	0.178
112MH/4	5	3.7	1770	14.4	7.2	810	L	176	4.0	4.8	0.76	87.5	0.304
132SH/4	7.5	5.5	1780	20.9	10.5	820	L	259	4.3	4.6	0.74	89.5	0.75
132MH/4	10	7.5	1770	27.0	13.5	735	J	356	3.2	4.0	0.78	89.5	0.84
160MH/4	15	11	1765	35.8	17.9	810	J	527	2.6	3.2	0.85	91.0	1.23
160LH/4	20	15	1765	49	24.5	850	K	712	2.8	3.5	0.85	91.0	1.35
180MH/4	25	18.5	1770	61	30.5	840	K	879	2.8	3.6	0.83	92.4	3.56
180LH/4	30	22	1770	72	36	880	K	1046	3.1	3.9	0.83	92.4	4.51
200LH/4	40	30	1770	94	47	830	J	1424	3.0	3.6	0.86	93.0	7.60
225SH/4	50	37	1782	-	59	810	J	1758	3.0	3.4	0.84	94.1	9.5
225MH/4	60	45	1782	-	70	820	J	2109	3.0	3.5	0.85	94.3	11.6
250MH/4	75	55	1790	-	86	820	J	2619	2.9	3.4	0.86	95.1	20.4
280SH/4	100	75	1786	-	116	830	J	3506	2.9	3.5	0.85	94.5	36.3
280MH/4	125	90	1786	-	146	800	J	4385	2.8	3.3	0.85	94.9	43.4
315SH/4	150	110	1791	-	174	760	H	5246	2.8	3.1	0.85	95.5	58.8
315MaH/4	200	150	1791	-	225	890	J	6995	3.3	3.5	0.86	95.9	86.9

a) Motors frame 225 and larger are standardly provided as single-voltage 460V and not as dual voltage

Pn - **Full load power**
Nn - **Full load speed**
In - **Full load current**
Ia - **Locked-rotor current**
Ia/In - **Locked-rotor current ratio (%)**
Tn - **Full-load torque**
Ta - **Locked-rotor torque**
Ta/Tn - **Locked-rotor torque ratio**
Tk - **Break-down torque**
Tk/Tn - **Break-down torque ratio**
pf - **Power factor**
Eff - **Normal efficiency**
Jm - **Motor inertia**

MOTORS

Send Quote Requests to info@automatedpt.com
Call +1(800)985-6929 To Order or Order Online At Nordgearmotors.com

Send Quote Requests to info@automatedpt.com Call +1(800)985-6929 To Order or Order Online At Nordgearmotors.com

Performance Data



NORD DRIVESYSTEMS

Standard Efficiency

575V – 60Hz

Inverter duty • TEFC
Synchronous speed 1800rpm @ 60Hz • 4-pole • Three-phase
Voltages: 332/575V – 60Hz • 1.15 Service Factor
Continuous Duty • 40°C Ambient • up to 3300ft Elevation
Class B temperature rise • Class F insulation

Motor Type	Power Pn		Nn Full-load	In Full-Load Current 575V	Ia/In	Code Letter	Torque Tn	Ta/Tn	Tk/Tn	pf	Eff.	Jm Inertia
	[hp]	[kW]	[rpm]	[A]	[%]		[lb-in]				[%]	[lb-ft²]
63S/4	0.16	0.12	1700	0.37	245	F	5.92	2.1	2.2	0.66	52	0.005
63L/4	0.25	0.18	1680	0.46	275	E	8.99	2.1	2.2	0.71	57	0.0067
71S/4	0.33	0.25	1710	0.66	310	G	12.3	2.5	2.4	0.64	63	0.017
71L/4	0.5	0.37	1720	0.8	355	F	18.0	2.45	2.6	0.69	71	0.0204
80S/4	0.75	0.55	1710	1.12	355	F	27.0	2.2	2.2	0.71	72	0.0259
80L/4	1	0.75	1650	1.46	390	G	38.1	2.2	2.3	0.74	70	0.0345
90S/4	1.5	1.1	1660	1.94	445	G	55.6	2.7	2.6	0.78	73	0.055
90L/4	2	1.5	1660	2.54	465	G	75.8	2.55	2.5	0.80	74	0.074
100L/4	3	2.2	1705	3.6	490	G	108	2.3	2.6	0.81	82	0.107
100LA/4	5	3.7	1725	6.1	510	G	180	2.7	3.1	0.75	81	0.141
132S/4	7.5	5.5	1735	7.92	545	G	267	2.45	2.75	0.82	86	0.55
132M/4	10	7.5	1735	10.3	645	H	363	2.9	3.2	0.84	87	0.752
160M/4	15	11	1770	14.7	665	H	522	2.45	3.0	0.82	88	0.95
160L/4	20	15	1765	19.5	725	H	713	2.9	3.3	0.86	89.4	1.23
180MX/4	25	18.5	1750	24.0	860	K	887	2.95	3.4	0.87	89	1.35
180LX/4	30	22	1755	28.4	980	L	1052	3.4	3.7	0.87	89.4	1.35
200L/4	40	30	1780	36.0	770	J	1414	2.9	3.6	0.85	92	5.70
225S/4	50	37	1765	50.0	760	H	1759	3.1	3.5	0.86	93.1	7.60
225M/4	60	45	1770		840	J	2133	3.1	3.6	0.86	93.8	8.54
250M/4	75	55	1782		700	H	2636	2.8	3.2	0.84	93.7	16.4
280S/4	100	75	1788		830	J	3497	2.9	3.5	0.84	94.4	30.6
280M/4	125	90	1786		810	J	4385	2.8	3.3	0.86	95.1	34.9
315S/4	150	110	1788		720	H	5255	2.8	3.1	0.84	94.7	47.5
315M/4	175	132	1790		800	J	6125	3.0	3.4	0.85	95.4	58.4
315Ma/4	200	150	1790		810	J	7003	3.2	3.6	0.86	95.7	71.4
315L/4	250	187	1790		850	J	8734	3.2	3.3	0.87	96.3	92.8

Pn - Full load power
Nn - Full load speed
In - Full load current
Ia - Locked-rotor current
Ia/In - Locked-rotor current ratio (%)
Tn - Full-load torque
Ta - Locked-rotor torque
Ta/Tn - Locked-rotor torque ratio
Tk - Break-down torque
Tk/Tn - Break-down torque ratio
pf - Power factor
Eff - Normal efficiency
Jm - Motor inertia

MOTORS

Send Quote Requests to info@automatedpt.com
Call +1(800)985-6929 To Order or Order Online At Nordgearmotors.com

DRIVESYSTEMS



Performance Data

Energy Efficient (EPAct)

575V – 60Hz / EE

Inverter duty • TEFC
Synchronous speed 1800rpm @ 60Hz • 4-pole • Three-phase
Voltages: 332/575V – 60Hz • 1.15 Service Factor
Continuous Duty • 40°C Ambient • up to 3300ft Elevation
Class B temperature rise • Class F insulation

Motor Type	Power Pn		Nn Full-load	In Full-Load Current 575V	Ia/In	Code Letter	Torque Tn	Ta/Tn	Tk/Tn	pf	Eff.	Jm Inertia
	[hp]	[kW]	[rpm]	[A]	[%]		[lb-in]				[%]	[lb-ft²]
80LH/4	1	0.75	1750	1.5	600	L	36.0	4.6	4.3	0.59	82.5	0.051
90SH/4	1.5	1.1	1740	1.75	630	J	53.1	3.5	3.8	0.76	84.0	0.085
90LH/4	2	1.5	1745	2.45	670	K	72.1	4.3	4.5	0.71	84.0	0.092
100LH/4	3	2.2	1765	3.4	790	L	105	3.6	4.7	0.73	87.5	0.178
112MH/4	5	3.7	1770	5.6	810	L	176	4.0	4.8	0.76	87.5	0.304
132SH/4	7.5	5.5	1780	8.3	820	L	259	4.3	4.6	0.74	89.5	0.75
132MH/4	10	7.5	1770	10.8	735	J	356	3.2	4.0	0.78	89.5	0.84
160MH/4	15	11	1765	14.3	810	J	527	2.6	3.2	0.85	91.0	1.23
160LH/4	20	15	1765	19.6	850	K	712	2.8	3.5	0.85	91.0	1.35
180MH/4	25	18.5	1770	24.4	840	K	879	2.8	3.6	0.83	92.4	3.56
180LH/4	30	22	1770	28.8	880	K	1046	3.1	3.9	0.83	92.4	4.51
200LH/4	40	30	1770	37.6	830	J	1424	3.0	3.6	0.86	93.0	7.60
225SH/4	50	37	1782	47.2	810	J	1758	3.0	3.4	0.84	94.1	9.5
225MH/4	60	45	1782	56	820	J	2109	3.0	3.5	0.85	94.3	11.6
250MH/4	75	55	1790	69	820	J	2619	2.9	3.4	0.86	95.1	20.4
280SH/4	100	75	1786	93	830	J	3506	2.9	3.5	0.85	94.5	36.3
280MH/4	125	90	1786	117	800	J	4385	2.8	3.3	0.85	94.9	43.4
315SH/4	150	110	1791	139	760	H	5246	2.8	3.1	0.85	95.5	58.8
315MaH/4	200	150	1791	180	890	J	6995	3.3	3.5	0.86	95.9	86.9

Pn - **Full load power**
Nn - **Full load speed**
In - **Full load current**
Ia - **Locked-rotor current**
Ia/In - **Locked-rotor current ratio (%)**
Tn - **Full-load torque**
Ta - **Locked-rotor torque**
Ta/Tn - **Locked-rotor torque ratio**
Tk - **Break-down torque**
Tk/Tn - **Break-down torque ratio**
pf - **Power factor**
Eff - **Normal efficiency**
Jm - **Motor inertia**

MOTORS

Send Quote Requests to info@automatedpt.com
Call +1(800)985-6929 To Order or Order Online At Nordgearmotors.com

Send Quote Requests to info@automatedpt.com Call +1(800)985-6929 To Order or Order Online At Nordgearmotors.com

Performance Data



DRIVESYSTEMS

Standard Efficiency

200-208V – 60Hz

Inverter duty • Induction motor • TEFC
Synchronous speed 1800rpm @ 60Hz • 4-pole • Three-phase
Voltages: 208V – 60Hz • 1.15 Service Factor
Continuous Duty • 40°C Ambient • up to 3300ft Elevation
Class B temperature rise • Class F insulation

Motor Type	Power Pn		Nn Full-load	In 208V	Ia/In	Code Letter	Torque Tn	Ta/Tn	Tk/Tn	pf	Eff.	Jm Inertia
	[hp]	[kW]	[rpm]	[A]	[%]		[lb-in]				[%]	[lb-ft²]
63S/4	0.16	0.12	1700	0.97	245	F	5.93	2.1	2.2	0.66	52	0.005
63L/4	0.25	0.18	1680	1.24	275	E	9.38	2.1	2.2	0.71	57	0.0067
71S/4	0.33	0.25	1710	1.73	310	G	12.2	2.5	2.4	0.64	63	0.015
71L/4	0.5	0.37	1720	2.10	355	F	18.3	2.45	2.6	0.69	71	0.0181
80S/4	0.75	0.55	1710	2.99	355	F	27.6	2.2	2.2	0.71	72	0.0304
80L/4	1	0.75	1650	4.05	390	G	38.2	2.2	2.3	0.74	70	0.0392
90S/4	1.5	1.1	1660	5.35	445	G	57.0	2.7	2.6	0.78	73	0.0670
90L/4	2	1.5	1660	7.01	465	G	75.9	2.55	2.5	0.80	74	0.0855
100L/4	3	2.2	1705	9.95	490	G	111	2.3	2.6	0.81	82	0.107
100LA/4	5	3.7	1725	16.8	510	G	183	2.7	3.1	0.75	81	0.162
132S/4	7.5	5.5	1735	21.9	545	G	272	2.45	2.75	0.82	86	0.553
132M/4	10	7.5	1735	28.5	645	H	363	2.9	3.2	0.84	87	0.753

Pn - Full load power
Nn - Full load speed
In - Full load current
Ia - Locked-rotor current
Ia/In - Locked-rotor current ratio (%)
Tn - Full-load torque
Ta - Locked-rotor torque
Ta/Tn - Locked-rotor torque ratio
Tk - Break-down torque
Tk/Tn - Break-down torque ratio
pf - Power factor
Eff - Normal efficiency
Jm - Motor inertia

MOTORS

Send Quote Requests to info@automatedpt.com
Call +1(800)985-6929 To Order or Order Online At Nordgearmotors.com



Performance Data

Standard Efficiency (EFF2)

400V – 50Hz

Inverter duty • TEFC
Synchronous speed 1500rpm @ 50Hz • 4-pole • Three-phase
Voltages: 400V (380-420) – 50Hz • 1.0 Service Factor
Continuous Duty • 40°C Ambient • up to 3300ft Elevation
Class B temperature rise • Class F insulation

Motor Type	Power Pn		Nn Full-load	In Full-Load Current 380-420V[a)]	Ia/In	Code Letter	Torque Tn	Ta/Tn	Tk/Tn	pf	Eff Full load	Eff 75% load	Eff Class	Jm Inertia
	[hp]	[kW]	[rpm]	[A]	[%]		[lb-in]				[%]	[%]		[lb-ft2]
63S/4	0.16	0.12	1335	0.46	245	E	7.55	1.8	1.9	0.76	50.0	b)	b)	0.005
63L/4	0.25	0.18	1325	0.62	260	D	11.4	1.8	1.9	0.80	56.5	b)	b)	0.0066
71S/4	0.33	0.25	1380	0.76	330	F	15.2	2.2	2.1	0.77	61.3	b)	b)	0.015
71L/4	0.5	0.37	1360	1.1	320	E	22.8	2.1	2.3	0.75	62.7	b)	b)	0.018
80S/4	0.75	0.55	1375	1.52	330	E	33.6	1.9	2.0	0.73	71.5	b)	b)	0.03
80L/4	1	0.75	1375	2.1	350	F	45.8	2.0	2.1	0.74	69.7	b)	b)	0.039
90S/4	1.5	1.1	1445	2.98	500	H	63.9	3.2	3.4	0.69	77.4	79.0	EFF2	0.067
90L/4	2	1.5	1440	3.73	540	H	87.5	3.1	3.6	0.73	79.3	80.0	EFF2	0.085
100L/4	3	2.2	1440	5.22	510	G	128	2.3	3.0	0.74	81.1	81.1	EFF2	0.107
100LA/4	4	3	1460	7.2	540	H	172	2.7	3.3	0.73	82.7	83.4	EFF2	0.16
112M/4	5.4	4	1445	8.3	530	G	232	2.3	2.8	0.80	86.0	84.0	EFF2	0.28
132S/4	7.5	5.5	1445	11.4	540	G	319	2.1	2.7	0.81	85.8	89.0	EFF2	0.55
132M/4	10	7.5	1445	14.8	550	G	436	2.5	2.8	0.84	87.0	86.0	EFF2	0.75
160M/4	15	11	1460	21.5	620	G	633	2.2	2.7	0.84	88.5	89.0	EFF2	0.95
160L/4	20	15	1460	28.5	650	H	861	2.6	3.0	0.84	90.0	90.2	EFF2	1.23
180MX/4	25	18.5	1460	35	770	J	1063	2.7	3.1	0.86	90.0	90.0	EFF2	1.35
180LX/4	30	22	1455	44	830	K	1265	3.1	3.4	0.82	90.5	90.5	EFF2	1.35
200L/4	40	30	1465	55	700	H	1722	2.6	3.2	0.86	91.8	91.8	EFF2	5.70
225S/4	50	37	1470	66	700	H	2118	2.8	3.2	0.87	92.9	92.9	EFF2	7.60
225M/4	60	45	1470	80	770	J	2575	2.8	3.3	0.87	93.4	93.4	EFF2	8.55
250M/4	75	55	1480	100	630	G	3120	2.5	2.8	0.85	93.3	93.6	EFF2	16.4
280S/4	100	75	1485	136	740	H	4235	2.5	3.0	0.85	94.2	94.0	EFF2	30.6
280M/4	125	90	1485	160	740	H	5088	2.5	3.0	0.86	94.6	94.6	EFF2	34.9
315 S/4	150	110	1486	200	650	G	6212	2.6	2.8	0.84	94.5	94.4	b)	47.5
315 M/4	180	132	1486	235	690	G	7451	2.8	3.1	0.85	94.8	94.7	b)	58.4
315 Ma/4	220	160	1486	280	690	G	9033	2.8	2.7	0.86	95.4	95.4	b)	71.4
315L/4	270	200	1486	345	700	G	11291	2.8	2.7	0.88	95.7	95.8	b)	92.8

a) Motors 10 hp(7.5 kW) and below are rated 230 /400Y – volts, motors above 10 hp(7.5 kW) are rated 400 /690Y-volts
b) EFF classes levels not applicable – motor outside the power range covered by the aggreement

Pn - **Full load power**
Nn - **Full load speed**
In - **Full load current**
Ia - **Locked-rotor current**
Ia/In - **Locked-rotor current ratio (%)**
Tn - **Full-load torque**
Ta - **Locked-rotor torque**
Ta/Tn - **Locked-rotor torque ratio**
Tk - **Break-down torque**
Tk/Tn - **Break-down torque ratio**
pf - **Power factor**
Eff - **Normal efficiency**
Jm - **Motor inertia**

Send Quote Requests to info@automatedpt.com
Call +1(800)985-6929 To Order or Order Online At Nordgearmotors.com

Performance Data



DRIVESYSTEMS

Energy Efficient (EFF1)

400V – 50Hz / EE

Inverter duty • TEFC
Synchronous speed 1500rpm @ 50Hz • 4-pole • Three-phase
Voltages: 400V (380-420) – 50Hz • 1.0 Service Factor
Continuous Duty • 40°C Ambient • up to 3300ft Elevation
Class B temperature rise • Class F insulation

EFF I CE

Motor Type	Power Pn		Nn Full-load	In Full-Load Current 400V * a) (380-420V)	Ia/In	Code Letter	Torque Tn	Ta/Tn	Tk/Tn	pf	Eff Full load	Eff 75% load	Eff Class	Jm Inertia
	[hp]	[kW]	[rpm]	[A]	[%]		[lb-in]				[%]	[%]		[lb-ft2]
90SH/4	1.5	1.1	1430	2.51	520	G	64.6	2.8	3.1	0.75	84.0	85.1	EFF1	0.082
90LH/4	2	1.5	1435	3.59	560	H	87.7	3.6	3.7	0.71	85.0	85.3	EFF1	0.093
100LH/4	3	2.2	1465	4.88	685	J	126	3.3	4.0	0.74	87.5	87.9	EFF1	0.17
112SH/4	4	3	1460	6.7	715	K	172	3.25	4.2	0.72	87.4	90.0	EFF1	0.28
112MH/4	5.4	4	1455	8.9	685	J	224	3.4	4.1	0.74	88.3	90.2	EFF1	0.30
132SH/4	7.5	5.5	1470	12	750	K	314	3.8	4.15	0.73	90.1	90.5	EFF1	0.75
132MH/4	10	7.5	1470	15.5	665	J	428	2.9	3.5	0.77	90.8	91.0	EFF1	0.84
160MH/4	15	11	1460	20.5	690	H	632	2.7	3.2	0.85	91.5	92.0	EFF1	1.23
160LH/4	20	15	1460	27.5	700	H	861	2.9	3.3	0.86	92.0	92.3	EFF1	1.35
180MH/4	25	18.5	1465	34.5	700	H	1063	2.5	3.2	0.84	92.5	93.0	EFF1	3.56
180LH/4	30	22	1465	40.5	730	H	1266	2.6	3.4	0.84	93.0	93.4	EFF1	4.51
200LH/4	40	30	1465	53	700	H	1722	2.6	3.2	0.87	93.5	94.0	EFF1	7.60
225SH/4	50	37	1480	67	720	H	2100	2.6	3.0	0.85	94.0	94.4	EFF1	9.5
225MH/4	60	45	1480	80	720	H	2548	2.6	3.0	0.86	94.5	94.7	EFF1	11.6
250MH/4	75	55	1485	96	740	H	3110	2.6	3.0	0.87	95.0	95.2	EFF1	20.4
280SH/4	100	75	1485	132	730	H	4235	2.5	3.0	0.86	95.2	95.3	EFF1	36.3
280MH/4	125	90	1485	158	740	H	5088	2.5	3.0	0.86	95.6	95.6	EFF1	43.4

a) Motors 10 hp(7.5 kW) and below are rated 230 /400Y – volts, motors above 10 hp(7.5 kW) are rated 400 /690Y-volts

Pn - **Full load power**
Nn - **Full load speed**
In - **Full load current**
Ia - **Locked-rotor current**
Ia/In - **Locked-rotor current ratio (%)**
Tn - **Full-load torque**
Ta - **Locked-rotor torque**
Ta/Tn - **Locked-rotor torque ratio**
Tk - **Break-down torque**
Tk/Tn - **Break-down torque ratio**
pf - **Power factor**
Eff - **Normal efficiency**
Jm - **Motor inertia**

MOTORS

Send Quote Requests to info@automatedpt.com
Call +1(800)985-6929 To Order or Order Online At Nordgearmotors.com

NORD DRIVESYSTEMS



Connection Diagrams

Frames 63-132
230 / 460V, 60Hz, 3Ø | 200 / 400V, 50Hz, 3Ø
190 / 380V, 60Hz, 3Ø

120094410

WIRING DIAGRAM
3 PHASE MOTOR

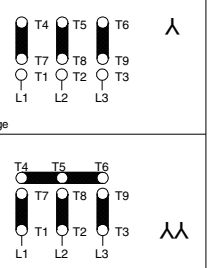

Frames 160 +
230 / 460V, 60Hz, 3Ø | 200 / 400V, 50Hz, 3Ø
190 / 380V, 60Hz, 3Ø

120095260

WIRING DIAGRAM
3 PHASE MOTOR

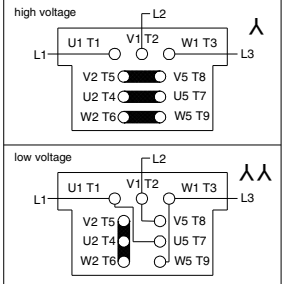

Frames 160 +
230 / 460V, 60Hz, 3Ø | 200 / 400V, 50Hz, 3Ø
190 / 380V, 60Hz, 3Ø

120095500 REV 1

WIRING DIAGRAM
3 PHASE MOTOR

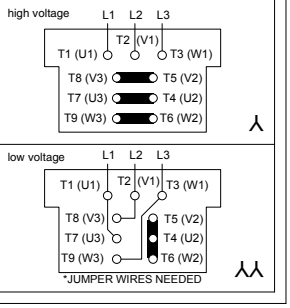

460 / 800V, 60Hz, 3Ø | 230 / 400V, 50Hz, 3Ø
208 / 360V, 60Hz, 3Ø | 400 / 690V, 50Hz, 3Ø
332 / 575V, 60Hz, 3Ø

120095270

WIRING DIAGRAM
3 PHASE MOTOR

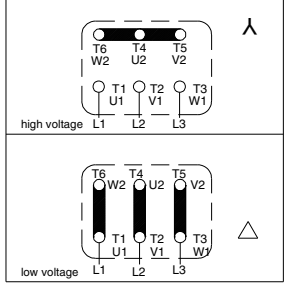

120094440

STANDARD BRAKE RECTIFIER

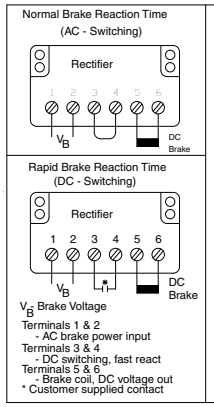

120094450

GPU BRAKE RECTIFIER

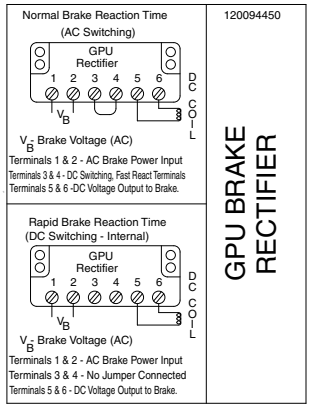

120094460

GPE BRAKE RECTIFIER

Use with P/N's 19140230 & 19140240

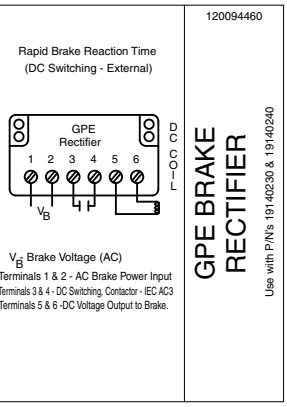

2 - SPEED MOTORS
SINGLE WINDING (4-2 & 8-4 POLE)

120094400

2 - SPEED MOTORS SINGLE WINDING

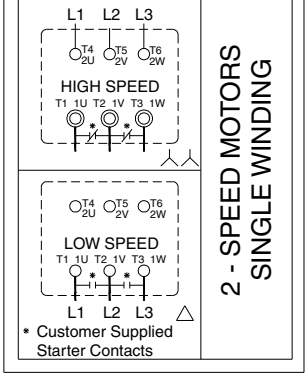

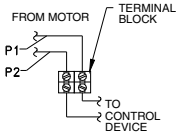

* MAX. OPERATING VOLTAGE 2.5V.
* SWITCH TEMP. 155°C
* RESPONSE TIME < 5 SECONDS

THERMISTOR
"TF" OPTION

120095240

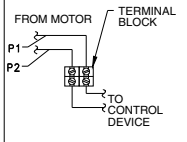

* NC (NORMALLY CLOSED) CONTACTS RATED 1.6A AT 2.50 VAC
* 6-500 VAC WORKING RANGE
* AUTOMATIC RESET AT 30 ± 15°C TEMP. DROP

THERMISTATS
"TW" OPTION

120095230

2 - SPEED MOTORS
DUAL WINDING (8-2 POLE)

120095310

2 - SPEED MOTORS DUAL WINDING

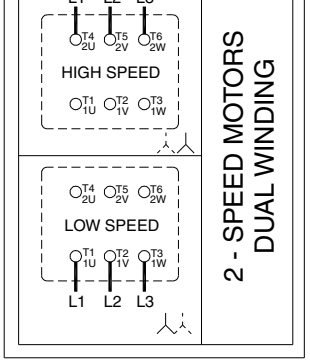

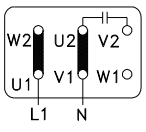

1 PHASE
115V*
50/60 Hz

* CAPACITOR IS SUPPLIED

BLOWER COOLING FAN
"FC" OPTION

120095450

OPTION "F" 1 PH

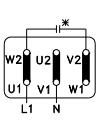

230V
50 / 60 Hz

OPTION "F" 3 PH

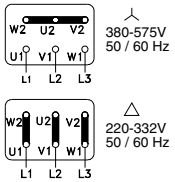

380-575V
50 / 60 Hz

220-332V
50 / 60 Hz

* CAPACITOR IS SUPPLIED

BLOWER COOLING FAN
"F" OPTION

120095250

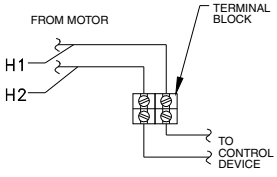

SPACE HEATER
"SH" OPTION

120095220

MOTORS

Send Quote Requests to info@automatedpt.com
Call +1(800)985-6929 To Order or Order Online At Nordgearmotors.com

Dimensions
Motor Options



DRIVESYSTEMS

Standard Motor

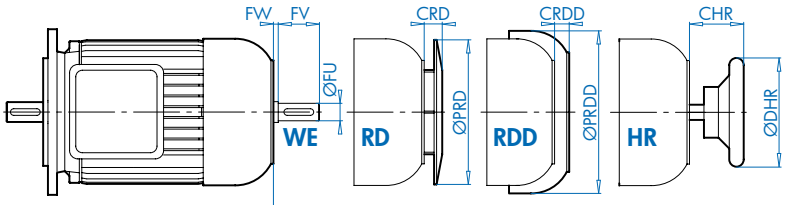

Option IG

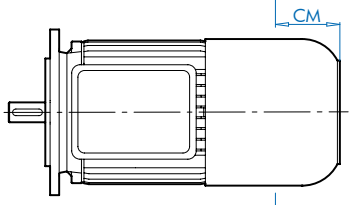

Option F

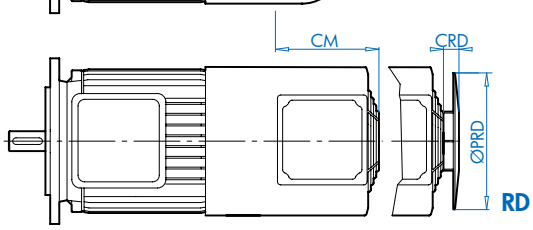

Option IG F

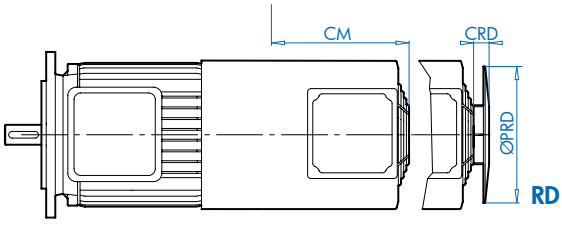

Motor Type	WE			RD		RDD		HR		IG	F	IG F	RD/IG/IGF	
	FU	FV	FW	PRD	CRD	PRDD	CRDD	DHR	CHR	CM	CM	CM	PRD	CRD
	[mm]			[in]										
63S/L	11	23	0	4.84	0.47	6.02	1.06	3.94	1.54	2.20	3.46	6.22	5.24	1.46
71S/L	11	23	1	5.43	0.47	6.65	0.94	3.94	1.57	2.20	3.50	5.67	5.91	1.46
80S/L	14	30	3	6.14	0.63	7.20	1.22	3.94	1.93	2.40	3.54	5.51	6.69	1.57
90S/L	19	40	7	6.93	0.63	7.91	1.22	6.30	2.64	2.83	4.09	5.87	7.40	1.18
100L	24	50	6	7.64	0.63	8.86	1.10	6.30	2.95	2.71	3.74	6.10	8.27	1.10
112M	24	50	4	8.58	0.63	10.43	1.50	6.30	2.91	2.67	3.90	5.87	9.80	1.30
132S/M	32	80	18	10.12	0.71	12.51	1.61	7.87	4.57	2.48	4.53	6.10	11.81	0.98
160M/L	42	110	23	9.84	2.09	14.45	1.77	9.84	4.72	2.95	6.50	6.93	13.31	1.26
180MX/LX	42	110	*	13.39	3.15	15.87	2.76	*	*	4.13	5.87	7.83	13.31	1.26
200L	55	110	17	13.39	3.15	17.72	3.23	-	-	8.15	6.14	8.14	13.31	1.26
225S	55	110	17	13.39	3.15	17.72	3.23	-	-	8.15	6.14	8.14	13.31	1.26
225M	55	110	17	13.39	3.15	17.72	3.23	-	-	8.15	6.14	8.14	13.31	1.26
250M	60	140	15	18.50	3.94	22.44	3.23	-	-	*	5.31	*	*	*
280S	65	140	15	20.67	4.33	24.61	3.23	-	-	*	6.30	*	*	*
280M	65	140	15	20.67	4.33	24.61	3.23	-	-	*	6.30	*	*	*
315S	70	140	5	23.23	4.33	27.56	3.23	-	-	*	6.30	*	*	*
315M	70	140	5	23.23	4.33	27.56	3.23	-	-	*	6.30	*	*	*
315L	70	140	5	23.23	4.33	27.56	3.23	-	-	*	6.30	*	*	*

* **Consult Factory**

Send Quote Requests to info@automatedpt.com
Call +1(800)985-6929 To Order or Order Online At Nordgearmotors.com



Dimensions
Brakemotor Options

Standard
BRE

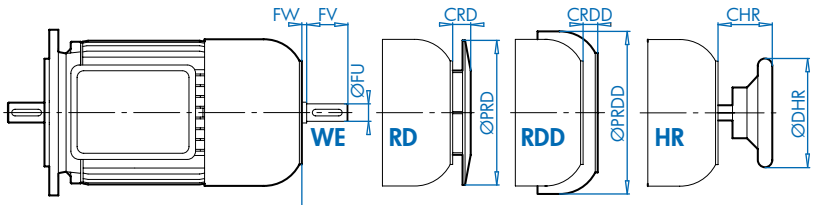

Option
BRE IG

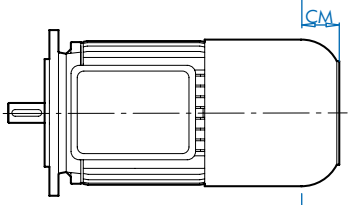

Option
BRE F

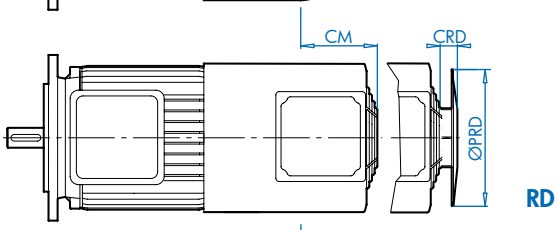

Option IG F
BRE IG F

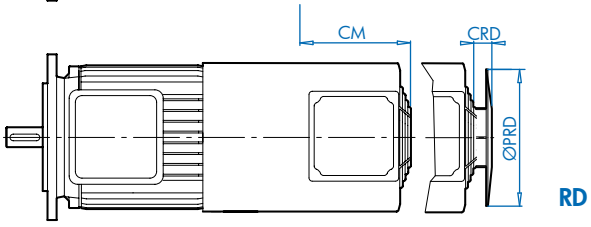

Motor Type	WE			RD		RDD		HR		IG	F	IG F	RD/IG/IGF	
	FU	FV	FW	PRD	CRD	PRDD	CRDD	DHR	CHR	CM	CM	CM	PRD	CRD
	[mm]			[in]										
63S/L	11	23	3.5	4.84	0.47	6.02	1.02	3.94	1.69	2.44	3.54	4.92	5.24	1.46
71S/L	11	23	3.5	5.43	0.47	6.65	0.94	3.94	1.69	2.91	3.70	5.47	5.91	1.46
80S/L	14	30	4	6.14	0.63	7.20	1.22	3.94	1.97	2.20	3.50	5.47	6.69	1.57
90S/L	19	40	8	6.93	0.63	7.91	1.22	6.30	2.68	2.76	3.94	5.71	7.40	1.18
100L	24	50	10	7.64	0.63	8.86	0.87	6.30	3.07	2.80	4.13	5.52	8.27	1.10
112M	24	50	7	8.58	0.63	10.43	1.50	6.30	3.03	2.52	4.13	5.52	9.80	1.30
132S/M	32	80	10	10.12	0.71	12.60	1.61	7.87	4.25	2.56	4.92	6.10	11.81	0.98
160M/L	42	110	19	12.20	0.75	14.45	1.77	9.84	4.57	1.54	5.12	6.50	13.31	1.26
180MX/LX	42	110	*	13.70	0.75	15.87	2.76	*	*	1.97	5.71	8.46	13.31	1.26
200L	55	110	17	15.16	1.57	17.72	3.23	-	-	5.91	5.52	8.46	13.31	1.26
225S	55	110	17	15.16	1.57	17.72	3.23	-	-	8.15	5.52	8.46	13.31	1.26
225M	55	110	17	15.16	1.57	17.72	3.23	-	-	8.15	5.52	8.46	13.31	1.26
250M	*	*	*	18.50	3.94	22.44	3.23	-	-	*	5.31	*	*	*
280S	*	*	*	20.67	4.33	24.60	3.23	-	-	*	6.30	*	*	*
280M	*	*	*	20.67	4.33	24.60	3.23	-	-	*	6.30	*	*	*
315S	*	*	*	*	*	*	*	-	-	*	*	*	*	*
315M	*	*	*	*	*	*	*	-	-	*	*	*	*	*
315L	*	*	*	*	*	*	*	-	-	*	*	*	*	*

*** Consult Factory**

Send Quote Requests to info@automatedpt.com
Call +1(800)985-6929 To Order or Order Online At Nordgearmotors.com

Dimensions
Conduit Box & Cable Entry



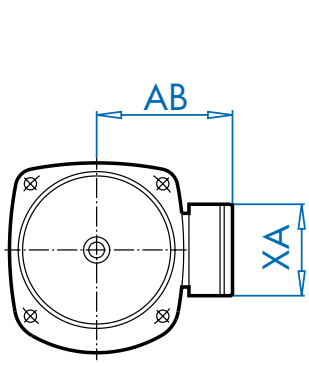

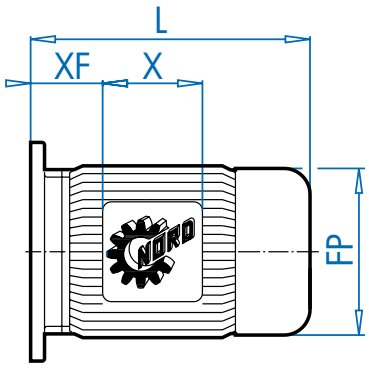

Type / Flange	Options	Outline dimensions						Cable entry	
63S/L		FP	AB	XF	X	L	XA	ce	ce-adapter
B14		5.12	4.53	0.47	3.94	7.56	3.94	2 × M20×1.5	1/2" NPT
160S		5.12	4.53	0.63	3.94	7.72	3.94	2 × M20×1.5	1/2" NPT
B14	BRE	5.12	4.84	0.71	5.28	9.76	3.50	2 × M20×1.5	1/2" NPT
160S	BRE	5.12	4.84	0.87	5.28	9.92	3.50	2 × M20×1.5	1/2" NPT

71S/L		FP	AB	XF	X	L	XA	ce	ce-adapter
B14		5.71	4.88	0.79	3.94	8.43	3.94	2 × M20×1.5	1/2" NPT
160S		5.71	4.88	1.65	3.94	9.29	3.94	2 × M20×1.5	1/2" NPT
250S		5.71	4.88	1.42	3.94	9.06	3.94	2 × M20×1.5	1/2" NPT
B14	BRE	5.75	5.24	1.02	5.28	10.71	3.50	2 × M20×1.5	1/2" NPT
160S	BRE	5.75	5.24	1.89	5.28	11.57	3.50	2 × M20×1.5	1/2" NPT
250S	BRE	5.75	5.24	1.65	5.28	11.34	3.50	2 × M20×1.5	1/2" NPT

80S/L/LH		FP	AB	XF	X	L	XA	ce	ce-adapter
B14		6.50	5.59	0.87	4.49	9.29	4.49	2 × M25×1.5	3/4" NPT
160S		6.50	5.59	1.85	4.49	10.28	4.49	2 × M25×1.5	3/4" NPT
250S		6.50	5.59	1.61	4.49	10.04	4.49	2 × M25×1.5	3/4" NPT
B14	BRE	6.50	5.59	1.02	6.02	11.81	4.25	2 × M25×1.5	3/4" NPT
160S	BRE	6.50	5.59	2.01	6.02	12.80	4.25	2 × M25×1.5	3/4" NPT
250S	BRE	6.50	5.59	1.77	6.02	12.56	4.25	2 × M25×1.5	3/4" NPT

90S/L/SH/LH		FP	AB	XF	X	L	XA	ce	ce-adapter
B14		7.20	5.79	1.02	4.49	10.87	4.49	2 × M25×1.5	3/4" NPT
160S		7.20	5.79	2.05	4.49	11.89	4.49	2 × M25×1.5	3/4" NPT
250S		7.20	5.79	1.81	4.49	11.65	4.49	2 × M25×1.5	3/4" NPT
300S		7.20	5.79	1.02	4.49	10.87	4.49	2 × M25×1.5	3/4" NPT
B14	BRE	7.20	5.79	1.18	6.02	13.82	4.25	2 × M25×1.5	3/4" NPT
160S	BRE	7.20	5.79	2.20	6.02	14.84	4.25	2 × M25×1.5	3/4" NPT
250S	BRE	7.20	5.79	1.97	6.02	14.61	4.25	2 × M25×1.5	3/4" NPT
300S	BRE	7.20	5.79	1.18	6.02	13.82	4.25	2 × M25×1.5	3/4" NPT

Send Quote Requests to info@automatedpt.com
Call +1(800)985-6929 To Order or Order Online At Nordgearmotors.com

DRIVESYSTEMS



Dimensions
Conduit Box & Cable Entry

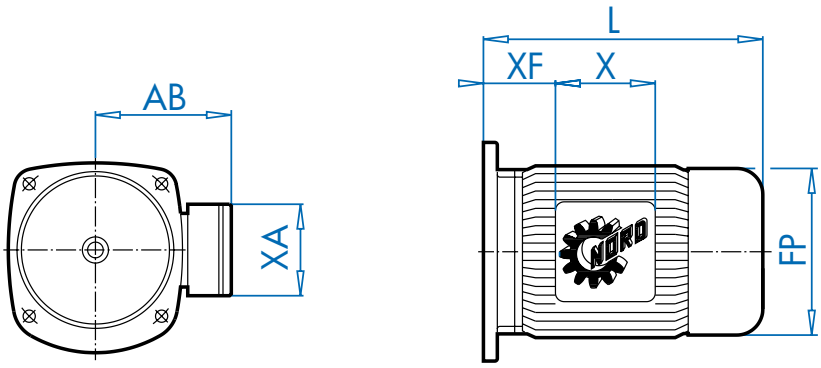

Type / Flange	Options	Outline dimensions						Cable entry	
100L/L/LA/LH		FP	AB	XF	X	L	XA	ce	ce-adapter
B14		7.91	6.65	1.26	4.49	12.05	4.49	2 × M32×1.5	1" NPT
160S		7.91	6.65	2.28	4.49	13.07	4.49	2 × M32×1.5	1" NPT
250S		7.91	6.65	2.05	4.49	12.83	4.49	2 × M32×1.5	1" NPT
300S		7.91	6.65	1.26	4.49	12.05	4.49	2 × M32×1.5	1" NPT
Ø 250		7.91	6.65	1.26	4.49	12.05	4.49	2 × M32×1.5	1" NPT
B14	BRE	7.91	6.77	1.42	6.02	15.63	4.25	2 × M25×1.5	1" NPT
160S	BRE	7.91	6.77	2.44	6.02	16.65	4.25	2 × M25×1.5	1" NPT
250S	BRE	7.91	6.77	2.20	6.02	16.42	4.25	2 × M25×1.5	1" NPT
300S	BRE	7.91	6.77	1.42	6.02	15.63	4.25	2 × M25×1.5	1" NPT
Ø 250	BRE	7.91	6.77	1.42	6.02	15.63	4.25	2 × M25×1.5	1" NPT

112M/SH/MH		FP	AB	XF	X	L	XA	ce	ce-adapter
B14		8.98	7.05	1.77	4.49	12.83	4.49	2 × M32×1.5	1" NPT
160S		8.98	7.05	2.91	4.49	13.98	4.49	2 × M32×1.5	1" NPT
250S		8.98	7.05	2.68	4.49	13.74	4.49	2 × M32×1.5	1" NPT
300S		8.98	7.05	1.89	4.49	12.95	4.49	2 × M32×1.5	1" NPT
Ø 250		8.98	7.05	1.77	4.49	12.83	4.49	2 × M32×1.5	1" NPT
B14	BRE	8.98	7.17	1.93	6.02	16.50	4.25	2 × M25×1.5	1" NPT
160S	BRE	8.98	7.17	3.07	6.02	17.64	4.25	2 × M25×1.5	1" NPT
250S	BRE	8.98	7.17	2.83	6.02	17.40	4.25	2 × M25×1.5	1" NPT
300S	BRE	8.98	7.17	2.05	6.02	16.61	4.25	2 × M25×1.5	1" NPT
Ø 250	BRE	8.98	7.17	1.93	6.02	16.50	4.25	2 × M25×1.5	1" NPT

132S/M/SH/MH		FP	AB	XF	X	L	XA	ce	ce-adapter
B14		10.47	8.03	2.09	4.80	16.42	4.80	2 × M32×1.5	1" NPT
250S		10.47	8.03	2.80	4.80	17.13	4.80	2 × M32×1.5	1" NPT
300S		10.47	8.03	2.01	4.80	16.34	4.80	2 × M32×1.5	1" NPT
Ø 250		10.47	8.03	2.80	4.80	17.13	4.80	2 × M32×1.5	1" NPT
B14	BRE	10.47	7.91	1.77	7.28	20.59	5.47	2 × M25×1.5	1" NPT
250S	BRE	10.47	7.91	7.28	7.28	21.34	5.47	2 × M25×1.5	1" NPT
300S	BRE	10.47	7.91	1.73	7.28	20.55	5.47	2 × M25×1.5	1" NPT
Ø 250	BRE	10.47	7.91	2.52	7.28	21.34	5.47	2 × M25×1.5	1" NPT

Send Quote Requests to info@automatedpt.com
Call +1(800)985-6929 To Order or Order Online At Nordgearmotors.com

Dimensions
Conduit Box & Cable Entry



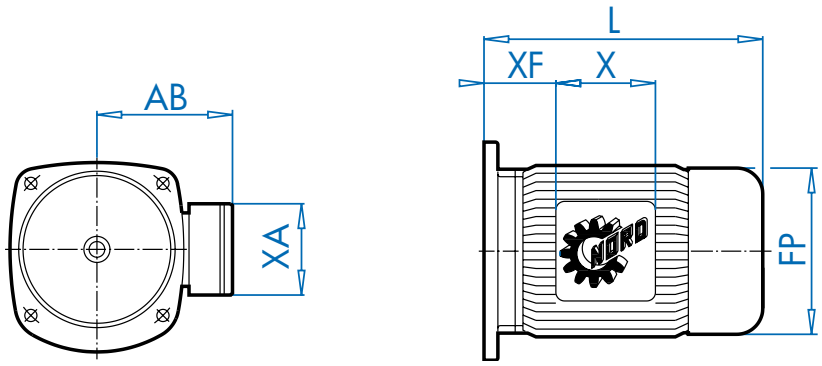

Type / Flange 160M/L/MH	Options	Outline dimensions						Cable entry	
		FP	AB	XF	X	L	XA	ce	ce-adapter
300S		12.60	8.90	3.07	6.50	18.82	6.50	2 × M40×1.5	1.0" NPT
Ø 300		12.60	8.90	3.07	6.50	18.82	6.50	2 × M40×1.5	1.0" NPT
Ø 350		12.60	8.90	3.07	6.50	18.82	6.50	2 × M40×1.5	1.0" NPT
300S	BRE	12.60	8.90	3.07	6.50	25.39	6.50	2 × M40×1.5	1.0" NPT
Ø 300	BRE	12.60	8.90	3.07	6.50	25.39	6.50	2 × M40×1.5	1.0" NPT
Ø 350	BRE	12.60	8.90	3.07	6.50	25.39	6.50	2 × M40×1.5	1.0" NPT

160LH		FP	AB	XF	X	L	XA	ce	ce-adapter
300S		12.60	8.90	3.07	6.50	20.39	6.50	2 × M40×1.5	1.0" NPT
Ø 300		12.60	8.90	3.07	6.50	20.39	6.50	2 × M40×1.5	1.0" NPT
Ø 350		12.60	8.90	3.07	6.50	20.39	6.50	2 × M40×1.5	1.0" NPT
300S	BRE	12.60	8.90	3.07	6.50	27.13	6.50	2 × M40×1.5	1.0" NPT
Ø 300	BRE	12.60	8.90	3.07	6.50	27.13	6.50	2 × M40×1.5	1.0" NPT
Ø 350	BRE	12.60	8.90	3.07	6.50	27.13	6.50	2 × M40×1.5	1.0" NPT

180MX/LX		FP	AB	XF	X	L	XA	ce	ce-adapter
300S		12.60	8.90	3.07	6.50	20.39	6.50	2 × M40×1.5	1.0" NPT
Ø 300		12.60	8.90	3.07	6.50	20.39	6.50	2 × M40×1.5	1.0" NPT
Ø 350		12.60	8.90	3.07	6.50	20.39	6.50	2 × M40×1.5	1.0" NPT
300S	BRE	12.60	8.90	3.07	6.50	27.13	6.50	2 × M40×1.5	1.0" NPT
Ø 300	BRE	12.60	8.90	3.07	6.50	27.13	6.50	2 × M40×1.5	1.0" NPT
Ø 350	BRE	12.60	8.90	3.07	6.50	27.13	6.50	2 × M40×1.5	1.0" NPT

180MH/LH		FP	AB	XF	X	L	XA	ce	ce-adapter
Ø 300		14.09	10.20	4.45	5.20	24.49	5.98	2 × M40×1.5	1.0" NPT
Ø 350		14.09	10.20	3.66	5.20	23.70	5.98	2 × M40×1.5	1.0" NPT
Ø 300	BRE	14.09	10.20	3.86	6.38	28.62	6.38	2 × M40×1.5	1.0" NPT
Ø 350	BRE	14.09	10.20	3.07	6.38	27.83	6.38	2 × M40×1.5	1.0" NPT

Send Quote Requests to info@automatedpt.com
Call +1(800)985-6929 To Order or Order Online At Nordgearmotors.com

DRIVESYSTEMS



Dimensions
Conduit & Cable Entry

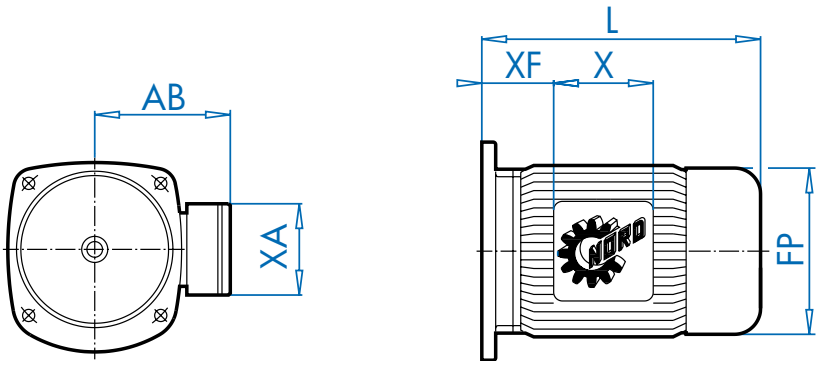

Type / Flange	Options	Outline dimensions						Cable entry	
200L/LH		FP	AB	XF	X	L	XA	ce	ce-adapter
Ø 350		15.67	12.05	4.33	7.56	27.09	10.24	2 × M50×1.5	1.50"NPT
Ø 450		15.67	12.05	3.70	7.56	26.46	10.24	2 × M50×1.5	1.50"NPT
Ø 350	BRE	15.67	12.05	4.33	7.56	33.66	10.24	2 × M50×1.5	1.50"NPT
Ø 450	BRE	15.67	12.05	3.70	7.56	33.03	10.24	2 × M50×1.5	1.50 "NPT
225S/M		**FP**	**AB**	**XF**	**X**	**L**	**XA**	**ce**	**ce-adapter**
Ø 350		15.67	12.05	4.33	7.56	27.09	10.24	2 × M50×1.5	1.50 "NPT
Ø 450		15.67	12.05	3.70	7.56	26.46	10.24	2 × M50×1.5	1.50 "NPT
Ø 350	BRE	15.67	12.05	4.33	7.56	33.66	10.24	2 × M50×1.5	1.50 "NPT
Ø 450	BRE	15.67	12.05	3.70	7.56	33.03	10.24	2 × M50×1.5	1.50 "NPT
225SH/MH		**FP**	**AB**	**XF**	**X**	**L**	**XA**	**ce**	**ce-adapter**
Ø 350		17.52	12.80	5.32	7.56	26.97	10.24	2x M50x1.5	1.50 "NPT
Ø 450		17.52	12.80	3.94	7.56	25.59	10.24	2x M50x1.5	1.50 "NPT
250M		**FP**	**AB**	**XF**	**X**	**L**	**XA**	**ce**	**ce-adapter**
Ø 450		19.49	15.43	5.08	9.29	29.92	11.81	2 × M63×1.5	Ø 1.89
Ø 450	BRE	19.49	15.43	5.08	9.29	38.19	11.81	2 × M63×1.5	Ø 1.89
250MH		**FP**	**AB**	**XF**	**X**	**L**	**XA**	**ce**	**ce-adapter**
Ø 450		19.49	15.43	5.08	9.29	32.68	11.81	2x M63x1.5	Ø 1.89
Ø 450	BRE	19.49	15.43	5.08	9.29	40.95	11.81	2x M63x1.5	Ø 1.89
280S/SH		**FP**	**AB**	**XF**	**X**	**L**	**XA**	**ce**	**ce-adapter**
Ø 450		22.64	17.91	4.06	9.21	34.06	12.60	2 × M63×1.5	Ø 1.89
Ø 450	BRE	22.64	17.91	4.06	9.21	45.28	12.60	2 × M63×1.5	Ø 1.89
280M		**FP**	**AB**	**XF**	**X**	**L**	**XA**	**ce**	**ce-adapter**
Ø 550		21.85	17.01	5.28	9.29	32.28	11.81	2 × M63×1.5	Ø 1.89
Ø 550	BRE	21.85	17.01	5.28	9.29	42.91	11.81	2 × M63×1.5	Ø 1.89
280MH		**FP**	**AB**	**XF**	**X**	**L**	**XA**	**ce**	**ce-adapter**
Ø 550		21.85	17.01	5.28	9.29	36.61	11.81	2x M63x1.5	Ø 1.89
Ø 550	BRE	21.85	17.01	5.28	9.29	47.24	11.81	2x M63x1.5	Ø 1.89
315S/M		**FP**	**AB**	**XF**	**X**	**L**	**XA**	**ce**	**ce-adapter**
Ø 550		25.39	20.28	4.53	10.47	38.19	15.16	2 × M63×1.5	Ø 2.24
315MA/L		**FP**	**AB**	**XF**	**X**	**L**	**XA**	**ce**	**ce-adapter**
Ø 550		25.39	20.28	4.53	10.47	43.70	15.16	2 × M63×1.5	Ø 2.24

MOTORS

Send Quote Requests to info@automatedpt.com
Call +1(800)985-6929 To Order or Order Online At Nordgearmotors.com

Dimensions
SK 300E Trio Inverter



DRIVESYSTEMS

Motor Dimensions with SK 300E Motor Mounted Vector Frequency Inverter

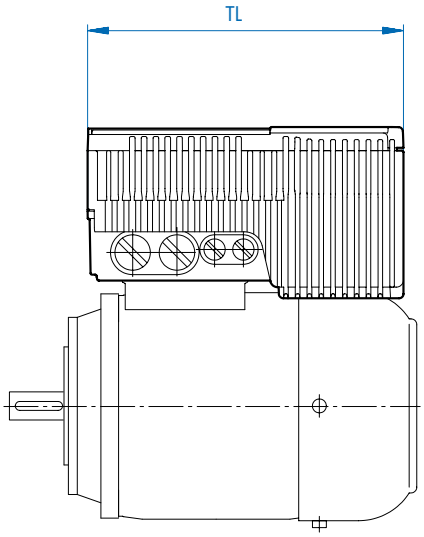

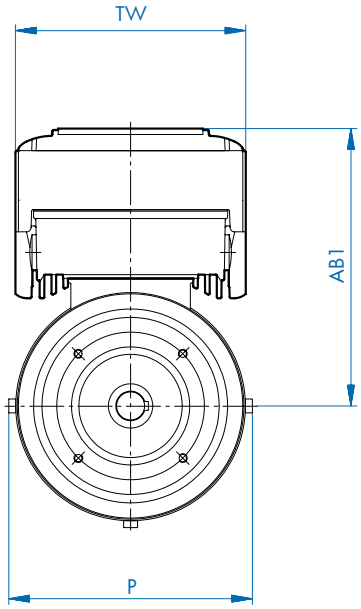

Basic NORD Motor Description	Power Rating HP/kW	240 VAC Input Inverter			480 VAC Input Inverter		
		Type SK 300E	Inverter Size	AB1 [in]	Type SK 300E	Inverter Size	AB1 [in]
63S/4	0.16 / 0.12	**-370-323-B**	Size 1	7.48	**-550-340-B**	Size 1	7.48
63L/4	0.25 / 0.18	**-370-323-B**	Size 1	7.48	**-550-340-B**	Size 1	7.48
71S/4	0.33 / 0.25	**-370-323-B**	Size 1	7.78	**-550-340-B**	Size 1	7.78
71L/4	0.50 / 0.37	**-370-323-B**	Size 1	7.78	**-550-340-B**	Size 1	7.78
80S/4	0.75 / 0.55	**-550-323-B**	Size 1	7.42	**-550-340-B**	Size 1	7.42
80L/4	1.00/ 0.75	**-750-323-B**	Size 1	7.42	**-750-340-B**	Size 1	7.42
90S/4	1.50/ 1.1	**-111-323-B**	Size 2	8.69	**-111-340-B**	Size 1	7.62
90L/4	2.00/ 1.5	**-151-323-B**	Size 2	8.69	**-151-340-B**	Size 1	7.62
100L/4	3.00/ 2.2	**-221-323-B**	Size 2	9.19	**-221-340-B**	Size 2	9.19
100LA/4	5.00/ 3.7	**Not Available**	N/A	N/A	**-401-340-B**	Size 2	9.19

Inverter Size	TL [in]	TW [in]	Weight [lbs]
Size 1	8.43	6.14	8.8
Size 2	11.14	7.72	18.5

Send Quote Requests to info@automatedpt.com
Call +1(800)985-6929 To Order or Order Online At Nordgearmotors.com

Send Quote Requests to info@automatedpt.com
Call +1(800)985-6929 To Order or Order Online At Nordgearmotors.com

Brakes

- Operation
- Selection-Torque
- Rectifiers
- Selection-Performance
- Mechanical Options
- Connection Diagrams

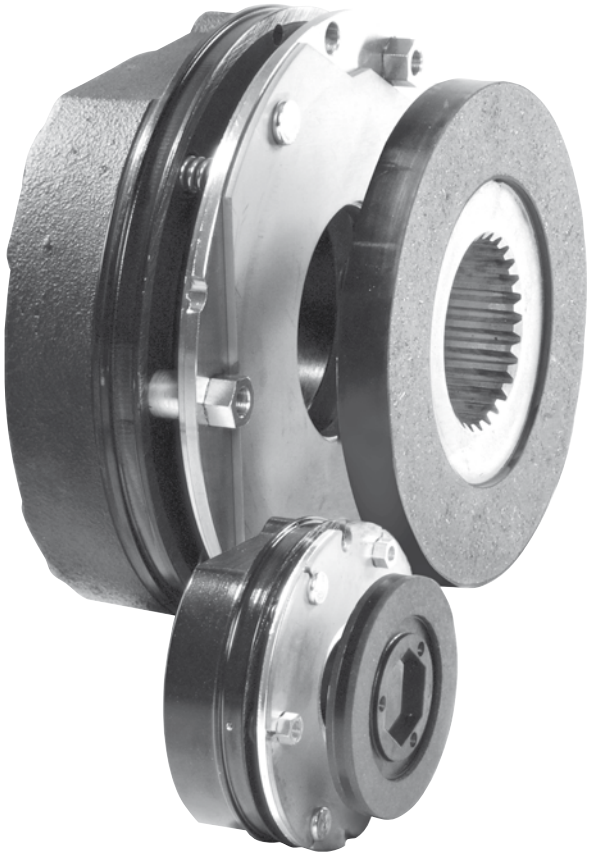

DRIVESYSTEMS

www.nord.com



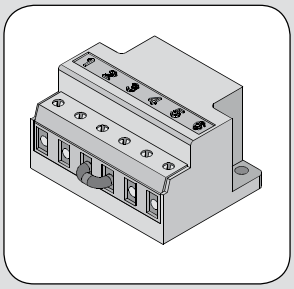

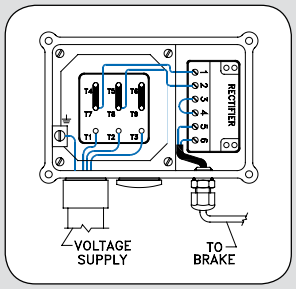

Send Quote Requests to info@automatedpt.com
Call +1(800)985-6929 To Order or Order Online At Nordgearmotors.com

Send Quote Requests to info@automatedpt.com Call +1(800)985-6929 To Order or Order Online At Nordgearmotors.com



Motor-Brake Option (BRE)

The standard NORD motor brake is spring-set when power is removed from the brake circuit (power-off). The brake coil utilizes a DC voltage supplied through a rectified power source.

Advantages

- Each NORD motor frame size has a number of brake sizes available, with different torque capacities.

- Brake adjustment is possible by changing the brake spring combinations. In addition, several common brake sizes also have an additional spanner-nut adjustment available.

- Compared to the many AC brakes on the market, NORD brakes offer better wear capacity, easier field adjustability, greater reliability, and lower end-cost to the consumer.

- NORD motor-brakes operate with a high degree of safety, because the brake is actively engaged with the no brake supply voltage (power-off).

- The rotating brake disc is environmentally safe with an asbestos-free friction material bonded to each side.

- The connection between the rectifier and the brake coil is already completed at the factory.

- The brake air-gap is factory-set but can easily be adjusted in the event of wear.

Operation

The main AC supply power to the brake rectifier can be supplied from either the motor terminal board or from a separately switched power source.

- In typical direct-across-the-line motor operation, AC brake power may be supplied from the motor's terminal board.

- If the motor is a two-speed model, or if the motor is being controlled by a variable frequency drive or electrical soft-start, then the brake rectifier must be powered from a separate AC source.

When the brake is de-energized (Power off), the braking springs exert a force against the armature plate (pressure plate), preventing the brake rotor from rotating. Conversely, when the brake coil is energized (Power on), a magnetic field builds and pulls the armature plate across the air gap to the brake oil casing. This action frees the brake rotor and allows the motor shaft to rotate.



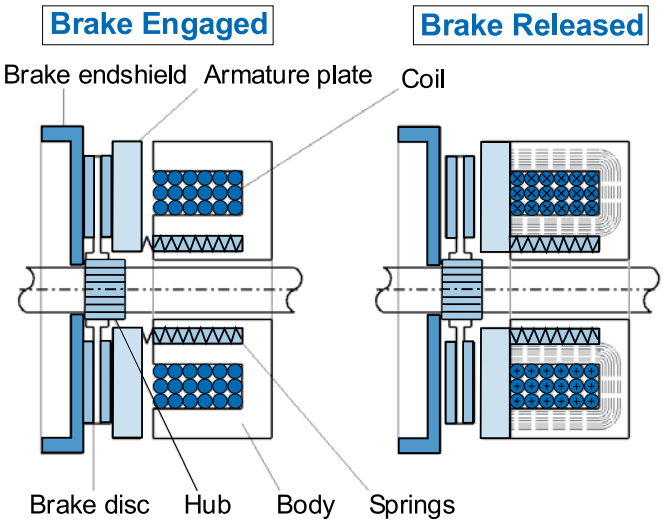

Brake Selection

The selection of a motor brake system is broken down into five phases. The selection of the braking torque, the selection of the braking times (release times and setting times), the selection of the electrical supply and connection, the selection of brake options, and the final phase is the verification of the permissible brake work.

Selection steps

1) Brake torque (page 730)
2) Brake times (page 734)
3) Electrical supply and connection (page 735)
4) Brake options (page 737)
5) Brake work verification (page 742)

Send Quote Requests to info@automatedpt.com
Call +1(800)985-6929 To Order or Order Online At Nordgearmotors.com

Send Quote Requests to info@automatedpt.com Call +1(800)985-6929 To Order or Order Online At Nordgearmotors.com



Brake Options

Abbreviation	Description	Page
ADJ	**Torque Adjustment** - Brake torque may be adjusted at the factory	731
DBR	**Double Brake (2xBRE)** - Double brakes are used for redundancy and additional safety	740
FBR	**Brass Foil** - Provides a brass foil in the brake air-gap to provide faster braking times	738
FHL	**Locking Hand Release Lever** - Lockable manual hand release lever	737
HL	**Hand Release Lever** - Manual hand release lever	737
HLH	**Hand Release Lever with Hole** - Hand lever with 5.5mm hole	737
IP66	**IP66 Brake Enclosure** - Brake with IP66 enclosure	737
IR	**Current Sensing Relay** - Fast brake engagement (stopping) without external control equipment	739
MIK	**Micro-Switch** - Brake fitted with a micro-switch for sensing the brake state (released or engaged)	738
NRB1	**Quiet Brake Release** - An o-ring is placed between the coil body and the armature plate for noise reduction	738
NRB2	**Quiet Brake Motor Operation** - An o-ring is placed between the carrier hub & the armature plate to prevent clattering.	738
RG	**Corrosion Protected Brake** - Corrosion protected brake	737
SR	**Dust & Corrosion Protected Brake** - Dust & corrosion protected brake	737
---	**Brake Heating** - Provides heating to avoid condensation	737

Rectifier Options

Abbreviation	Description	Page
Rectifiers	Most NORD brakes are provided with a rectifier that converts AC voltage to DC voltage. Rectifiers are used because most motors are AC powered, but brakes require DC power.	732
G...V	**Sealed Rectifier** - Rectifiers sealed with an electrically safe resin	732
GP...	**High Performance Rectifier** - Improves brake release and stopping times	733

Brake Nomenclature

BRE – –

- Additional Brake Options
- Brake Size/Torque Rating
- Brake

Ordering Examples

BRE 100 HL RG IR

- Current Sensing Relay
- Corrosion Protected Brake
- Hand Release Lever
- 100 Nm Brake Torque
- Brake

Brake, 100 Nm with a hand release lever, corrosion protected brake, and a current sensing relay.

BRE 40 FHL SR

- Dust & Corrosion Prot. Brake
- Locking Hand Release Lever
- 40 Nm Brake Torque
- Brake

Brake, 40 Nm with a locking hand release lever and dust & corrosion protected brake.

Send Quote Requests to info@automatedpt.com
Call +1(800)985-6929 To Order or Order Online At Nordgearmotors.com

General Information



Brake Torque Selection

Each NORD motor size has a number of brake torque sizes available. The BRE value in the table below is the standard brake torque size for each motor.

Example for ordering: SK 32 - S/4 **BRE10**

(**BRE 10** indicates a brake torque size of 10 Nm)

CAUTIONS

- BRE800 and BRE1200 brakes may only be controlled with a fast reaction rectifier (overexcitation), the maximum permissable nominal currents of the rectifier must be considered!

General Selection Considerations

NORD relies on the equipment builder to specify appropriate brake sizing for their application, while giving consideration to the following:

- For most applications, we advise sizing the brake to 1.5 - 2 times the motor rated torque.
- For vertical applications, it may be advisable to size the brake size up to 3 times the motor rated torque.
- For some applications, it may be necessary to specify a reduced brake torque setting to prevent excessive peak load conditions developed at the reducer output.
- On travel drive applications, excessive brake torque may lead to wheel skid; in addition on crane applications excess hoist-cable swing can result.

Motor Size & Efficiency				Brake Size and Torque											
Frame Size	SE	EE	PE		BRE5	BRE10	BRE20	BRE40	BRE60	BRE100	BRE150	BRE250	BRE400	BRE800	BRE1200
				Nm	5	10	20	40	60	100	150	250	400	800	1200
				lb-in	44	89	177	354	531	885	1328	2213	3540	7080	10620
				lb-ft	3.7	7.4	14.8	29.5	44.3	73.8	111	184	295	590	885
63	S/L				Std.	Opt. * #									
71	S/L				Std.	Opt. *									
80	S	SH			Std.	Opt.	Opt. *								
80	L	LH	LP		Opt.	Std.	Opt. *								
90	S	SH	SP			Opt.	Std.	Opt.							
90	L	LH	LP			Opt.	Std.	Opt.							
100	L	LH	LP				Std.	Opt.	Opt. #						
100	LA	AH	AP				Opt.	Std.	Opt. #						
112		SH					Opt.	Std.	Opt.						
112	M	MH	MP				Opt.	Opt.	Std.						
132	S	SH	SP						Std.	Opt.	Opt. *				
132	M	MH	MP						Opt.	Std.	Opt. *				
132	MA								Opt.	Opt.	Std. *				
160		SH								Opt.	Std.	Opt.			
160	M	MH	MP							Opt.	Std.	Opt.			
160	L	LH	LP							Opt.	Opt.	Std.			
180	MX										Opt.	Std.			
180	LX										Opt.	Std.			
180		MH	MP									Std.	Opt.*#		
180		LH	LP									Std.	Opt.*#		
200	LX	XH										Opt.	Std.*#		
200	L											Opt.	Std.		
225	S	SH											Std.	Opt. *2)	
250	M	MH											Opt.	Std. *2)	
280	S	SH												Std. *2)	Opt. *3)
280	M	MH												Std. *2)	Opt. *3)
Weight		kg			2	3	5.5	7	10	16	22	32	50	80	100
		lb			4.4	6.6	12.1	15.4	22	35	49	71	110	176	220
Inertia		kg-m² x 10⁻³			0.015	0.045	0.153	0.45	0.86	1.22	2.85	6.65	19.5	39	39
		lb-ft² x 10⁻³			0.356	1.068	3.63	10.68	20.4	29.0	67.6	158	463	925	925

* IP66 brake not possible

Manual brake release option not possible

2) When used as a stopping brake, evaluation is essential.

3) Designed as a holding brake or emergency stop only.

Std - Standard Offering

Opt - Optional Offering

BRAKES

Send Quote Requests to info@automatedpt.com
Call +1(800)985-6929 To Order or Order Online At Nordgearmotors.com



Torque Adjustment (ADJ)

Mod

The brake torque can be adjusted by changing the brake spring combinations. Additionally, on brakes up to size BRE40, the user can can make fine torque adjustments by turning the spanner nut. From the factory, the spanner nut will be tight against the brake casing. The braking torque is adjusted by unscrewing the spanner nut a number of clicks with a spanner wrench.

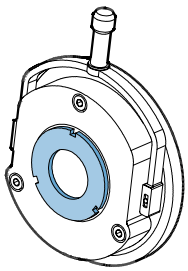

When Ordering the Torque Adjustment option specify ADJ _____ Nm

Torque Spring Adjustments											
# Springs	Unit	BRE5	BRE10	BRE20	BRE40	BRE60	BRE100	BRE150	BRE250	BRE400	BRE800
8	[Nm]								250	400	800
	[lb-ft]								184	295	590
7	[Nm]	5	10	20	40	60	100	150			
	[lb-ft]	3.7	7.4	14.8	29.5	44.3	74	111			
6	[Nm]								187	300	600
	[lb-ft]								138	221	443
5	[Nm]	3.5	7	14	28	46	70	107			
	[lb-ft]	2.6	5.2	10.3	20.7	33.9	51.6	79.0			
4	[Nm]	3	6	12	23	34	57	85	125	200	400
	[lb-ft]	2.2	4.4	8.9	17.0	25.1	42.0	62.7	92	148	295
3	[Nm]	2	4	8	17	26	42	65			
	[lb-ft]	1.5	3.0	5.9	12.5	19.2	31.0	47.9			

Reduction of Brake Torque					
	Unit	BRE5	BRE10	BRE20	BRE40
Torque Reduction per Spanner Nut Click (Adjustment Step)	[Nm]	0.2	0.2	0.3	1.0
	[lb-ft]	0.15	0.15	0.22	0.74
Lowest Torque Setting with Spring Removal and Spanner Nut Adjustment	[Nm]	0.8	1.6	4.4	5
	[lb-ft]	0.59	1.18	3.25	3.69

CAUTIONS

- **Brake torque** - The brake torque is measured with a mean friction radius of the brake pad surface with a circumferential speed of 1m/sec (197 fpm).
- **Brake torque tolerance** - For different applications and operating conditions, brake torque can vary from +40/-20% compared to the rated brake torque.
- **Initial operation & wear in period** - In new condition, the brake will have a reduced torque of up to 30%. In order to achieve full rated brake torque, a short break in period is required. The break in time will vary depending on system loads.
- **Setting times** - The lower the brake torque, the longer the brake setting times.
- **Release times** - The lower the brake torque, the faster the brake release times.

Send Quote Requests to info@automatedpt.com
Call +1(800)985-6929 To Order or Order Online At Nordgearmotors.com

Send Quote Requests to info@automatedpt.com Call +1(800)985-6929 To Order or Order Online At Nordgearmotors.com

General Information



Brake Control Rectifiers

NORD brake control rectifiers convert AC voltage to DC voltage. Rectifiers are used because most applications require AC voltage to power the motor, but DC power is required to power the brake and DC power is not typically available.

NORD brakemotors include the rectifier located inside the terminal box. NORD rectifiers have six terminals and can be powered by the motor terminal block, or by a separate power source.

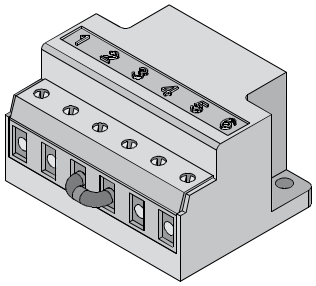

Rectifier Terminals	Description
1 & 2	Brake Supply AC Voltage
3 & 4	DC-Switching Contact or Jumper
5 & 6	Connection to Brake Coil

Rectifier Advantages:

- Individual power source for each brake
- Compact size, mounted inside the terminal box
- Multiple voltage options, types, and release/engagement modes available
- Mountable in remote control cabinet
- Integral protection against voltage spikes

Rectifier Types:

- **Full-wave rectifier:** The DC output voltage is 90% of the applied input AC voltage – types "GV…"
- **Half-wave rectifier:** The DC output voltage is 45% of the applied input AC voltage – types "GH…"
- **Push-hybrid rectifier (full-wave and half-wave):** The rectifier is designed to switch from an initial full-wave mode to a final half-wave mode in approximately 250 ms – types "GP…"

Rectifier Nomenclature

G H E 4 0 L

- **Electronic Protection**
  - L = Varnish coated
  - V = Encapsulated
- **Voltage Range**
  - 20 = up to 275VAC input
  - 40 = up to 480VAC input
  - 50 = up to 575VAC input
- **Type of DC Switching**
  - E = External DC-switching (contact)
  - U = Internal DC-switching (voltage)
- **Type of Rectifier**
  - H= Half-wave
  - V = Full-wave (bridge)
  - P = Push-Hybrid (full & half-wave)
  - U = Dual (full & half-wave)
- **Rectifier**

Standard Rectifier

NORD standard rectifiers are provided with each brake motor (except 24 VDC brakes) unless a sealed or high performance rectifier is specified.

Standard Rectifier			
Nomenclature	**Part #**	**Type**	**Color**
GVE20L	19141000	Full-wave	Black
GHE40L	19141010	Half-wave	Yellow
GHE50L	19141020	Half-wave	Grey

Sealed Rectifiers G…V

NORD offers rectifiers that are sealed with an electrically safe resin to ensure that water and moisture will not pass into the rectifier. Sealed rectifiers have the same brake performance ratings as the standard rectifier and can be beneficial if water is present in the motors terminal box.

Sealed Rectifier			
Nomenclature	**Part #**	**Type**	**Color**
GVE20V	19141030	Full-wave	Black
GHE40V	19141040	Half-wave	Yellow
GHE50V	19141050	Half-wave	Grey

Send Quote Requests to info@automatedpt.com
Call +1(800)985-6929 To Order or Order Online At Nordgearmotors.com

Send Quote Requests to info@automatedpt.com Call +1(800)985-6929 To Order or Order Online At Nordgearmotors.com

AC Switching (Standard Stopping)

The rectifier can be wired to operate by supplying and removing AC power, commonly called AC switching. The advantage to using AC switching is that the rectifier can be powered directly from the motor's terminal block and no additional wiring is required. However, tapping into the motor's terminal block gives the slower stopping time due to the de-energizing time of the motor's magnetic field. The stopping time can be improved by wiring the rectifier from an external power supply.

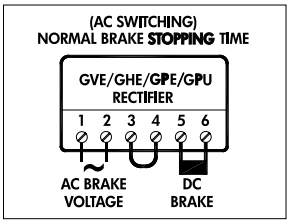

DC switching (Fast Stopping)

DC switching directly interrupts the current flow in the DC circuit of the rectifier. This provides much faster stopping, because you do not need to wait for the motor's magnetic field to de-energize. To implement DC switching, a normally open relay must be installed between terminals 3 and 4 on the rectifier for rectifier types GVE, GHE, and GPE. For GPU type rectifiers simply remove the jumper between terminals 3 & 4 to activate DC switching.

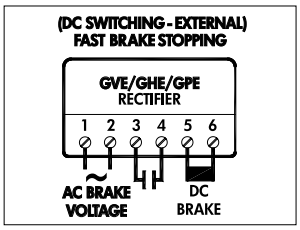

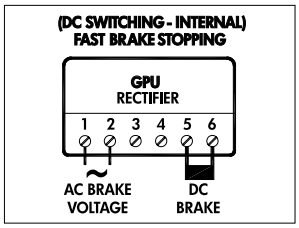

GP... High Performance Rectifiers

The "GP…" high performance rectifiers improve brake release time and stopping time. The "GP…." rectifier is a push-hybrid rectifier; meaning that it initially acts as a full-wave rectifier for approximately 250 ms, after which it operates as a half-wave rectifier.

There are two types of "GP…" rectifiers. The first type utilizes External DC Switching "GPE...", this is primarily used in across-the-line applications, where the brake power is supplied from the motor terminal block. The second type utilizes Integrated DC Switching "GPU...". The built-in DC switching of the "GPU" rectifiers is supply voltage triggered. The "GPU" rectifiers can only be used when the brake is powered separately from the motor. Examples include using a frequency inverter, two-speed motor or soft-starter. The "GPU" rectifiers are not suitable for use when the brake power is taken form the motor supply power (motor terminal block).

There are two ways to apply "GP…" rectifiers. The first is called, "overexcitation (fast brake release)" and the second is called, "reduced power holding (very fast stopping)"

GPE - High Performance Rectifier with External DC switching			
Nomenclature	**Part #**	**Type**	**Color**
GPE20L	19140230	Push-hybrid	Black
GPE40L	19140240	Push-hybrid	Black

GPU - High Performance Rectifier with Integrated DC switching			
Nomenclature	**Part #**	**Type**	**Color**
GPU20L	19140090	Push-hybrid	Black
GPU40L	19140170	Push-hybrid	Black

Overexcitation (fast brake release)

In overexcitation, the rectifier initially over-voltages (overexcites) the brake coil, causing a stronger than normal magnetic field which releases the brake quicker than normal. The rectifier then is switched to a lower holding voltage so it does not thermally overload the brake coil. In this method, the brake coil is selected as if the brake system is powered by a half-wave rectifier. In other words, the DC brake voltage should be 45% of the applied AC rectifier input voltage. This brake control is also sometimes referred to as "Voltage Forcing" or "Supercharging".

Overexcitation is commonly used in very high cycling brakemotor applications to reduce motor heating during the motor start and brake release.

Reduced Power Holding (very fast stopping)

In reduced power holding, the rectifier initially supplies the rated DC voltage to the brake coil. When voltage is first applied, the rectifier operates as a full-wave rectifier (90% of the applied AC voltage), releasing the brake in the standard time. After the brake is released, the rectifier switches to half-wave mode (45% of the applied DC voltage), weakening the brake's magnetic field. The weaker field will allow the brake to stop more quickly when power is removed. In this method the brake coil is selected as if the brake system is powered by a full-wave rectifier. Therefore, the brake coil's DC voltage rating should be 90% of the AC voltage applied to the rectifier.

Send Quote Requests to info@automatedpt.com
Call +1(800)985-6929 To Order or Order Online At Nordgearmotors.com

Selection



Brake Times & Electrical Selection

Brake timing performance is critical in selecting the optimal brake system. NORD brakes can provide exceptional performance in terms of the release (start) times and engagement (stop) times. Use the following guidelines in order to select the correct brake control components and connections.

1) Determine if the brake needs to be wired directly from the motor terminal block or powered by a separate source.

- If you are using a frequency inverter, soft-start or a two speed motor you will need to supply the rectifier from a separate power source.

- If the motor is powered direct across-the-line the rectifier power can be supplied from the motor's terminal block.

2) What type of performance do I need?

- Is the standard brake performance OK?

- Is a higher performance required for fast brake release or very fast brake stopping?

Selection Sugestions

When Fast or Very Fast Stopping is Recommended

Any applications that require quick stops and positive action at stand-still

- conveyors and inclined conveyors
- hoists and lifts
- bulkmaterialhandlingequipment(bucketelevators, idler conveyor's).

CAUTIONS

- **Hoisting (lifting/lowering) applications** - must have the brake wired for fast response.

When Fast-Release is Recommended (Overexcitation)

Any application that is very high-cycling with frequent starts and stops. These applications require the brake to release very-quickly in order to avoid excessive heat build-up in the AC motor and brake coil.

- Index conveyors
- Diverters
- Storage and retrieval crane systems

Power Source	Brake Release (start)	Brake engagement (stop)	Braking Method *	Rectifier
Motor Terminal Block	Standard	Standard (AC switching)	10	GVE/GHE
	Standard	Fast (DC switching)	15	GVE/GHE
	Standard	Very Fast (Reduced power holding)	40	GPE
	Fast (Overexcitation)	Standard (AC switching)	30	GPE
	Fast (Overexcitation)	Fast (DC switching)	35	GPE
Separate Power Source	Standard	Standard (AC switching)	20	GVE/GHE
	Standard	Fast (DC switching)	25	GVE/GHE
	Standard	Very Fast (Reduced power holding)	55	GPU
	Fast (Overexcitation)	Standard (AC switching)	45	GPU
	Fast (Overexcitation)	Fast (DC switching)	50	GPU

*** Braking methods referenced in connection diagrams on pages 743 - 748**

Send Quote Requests to info@automatedpt.com
Call +1(800)985-6929 To Order or Order Online At Nordgearmotors.com

Send Quote Requests to info@automatedpt.com Call +1(800)985-6929 To Order or Order Online At Nordgearmotors.com



3) What is the AC brake supply voltage?

The table below determines the rectifier and DC brake voltage required, based on the AC supply voltage & braking method.

AC Brake Supply Voltage (VAC)	Braking Method	Rectifier Model Type	DC Brake Voltage (VDC)	Rectifier Part Number
115 (105-120)	20	GVE20L	105	19141000
	25	GVE20L	105	19141000
208 (200-208)	10	GVE20L	180	19141000
	15	GVE20L	180	19141000
	20	GVE20L	180	19141000
	25	GVE20L	180	19141000
	40	GPE20L	180	19140230
	55	GPU20L	180	19140090
230 (220-240)	10	GVE20L	205	19141000
	10	GHE40L	105	19141010
	15	GVE20L	205	19141000
	15	GHE40L	105	19141010
	20	GVE20L	205	19141000
	20	GHE40L	105	19141010
	25	GVE20L	205	19141000
	25	GHE40L	105	19141010
	30	GPE20L	105	19140230
	35	GPE20L	105	19140230
	40	GPE20L	205	19140230
	45	GPU20L	105	19140090
	50	GPU20L	105	19140090
	55	GPU20L	205	19140090
400 (380-415)	10	GHE40L	180	19141010
	15	GHE40L	180	19141010
	20	GHE40L	180	19141010
	25	GHE40L	180	19141010
	30	GPE40L	180	19140240
	35	GPE40L	180	19140240
	45	GPU40L	180	19140170
	50	GPU40L	180	19140170
460 (440-480)	10	GHE40L	205	19141010
	15	GHE40L	205	19141010
	20	GHE40L	205	19141010
	25	GHE40L	205	19141010
	30	GPE40L	205	19140240
	35	GPE40L	205	19140240
	45	GPU40L	205	19140170
	50	GPU40L	205	19140170
500	10	GHE50L	225	19141020
	15	GHE50L	225	19141020
	20	GHE50L	225	19141020
	25	GHE50L	225	19141020
575 (550-600)	10	GHE50L	250	19141020
	15	GHE50L	250	19141020
	20	GHE50L	250	19141020
	25	GHE50L	250	19141020



Specify Rectifier Model Type _____ And DC Brake Voltage _____

Send Quote Requests to info@automatedpt.com
Call +1(800)985-6929 To Order or Order Online At Nordgearmotors.com

Rectifier Ratings & Dimensions

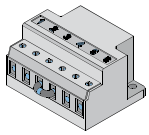

DRIVESYSTEMS

Standard Rectifier Dimensions

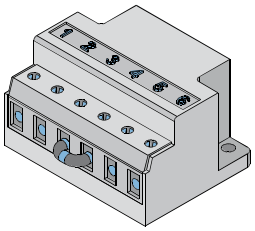

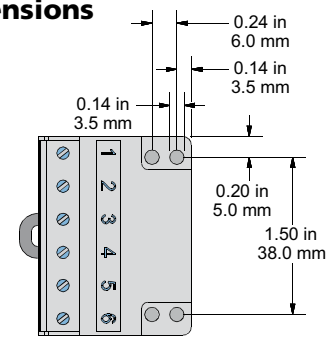

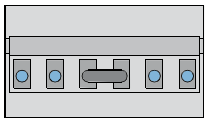

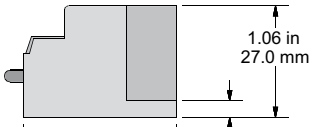

GP Rectifier Dimensions

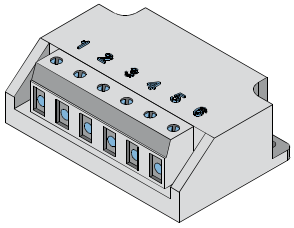

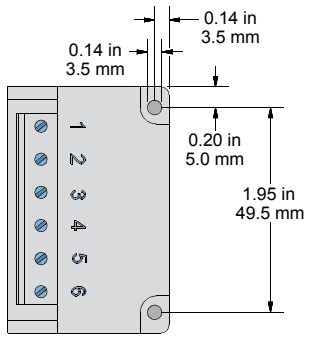

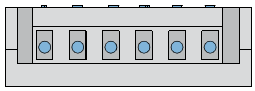

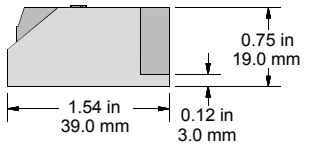

Rectifier Overview

Rectifier Model Type	Part Number	Part Color	Type 1 input Voltage	Input Voltage Range	Output Voltage	Rated Output Current		DC switching Mode
						(40°C)	(75°C)	
Standard Protected Electronics "L"								
GVE20L Full-Wave	19141000	Black	230VAC	110-275VAC +/- 10%	205VDC (VDC = VAC x 0.9)	1.5ADC	1.0ADC	External Contact
GHE40L Half-Wave	19141010	Yellow	480VAC	200-480VAC +/- 10%	216VDC (VDC = VAC x 0.45)	2.0ADC	1.0ADC	External Contact
GHE50L Half-Wave	19141020	Grey	575VAC	200-575VAC +/- 10%	259VDC (VDC = VAC x 0.45)	2.0ADC	1.0ADC	External Contact
GPE20L Push-Hybrid	19140230	Black	230VAC	200-275VAC +/- 10%	205VDC / 105VDC (VDC = VAC x 0.9) / (VDC = VAC x 0.45)	0.7ADC	0.5ADC	External Contact
GPE40L Push-Hybrid	19140240	Black	480VAC	380-480VAC +/-10%	432VDC / 216VDC (VDC = VAC x 0.9) / (VDC = VAC x 0.45)	0.7ADC	0.5ADC	External Contact
GPU20L Push-Hybrid	19140090	Black	230VAC	200-275VAC +/- 10%	205VDC / 105VDC (VDC = VAC x 0.9) / (VDC = VAC x 0.45)	0.7ADC	0.5ADC	Internal Activation*
GPU40L Hybrid	19140170	Black	480VAC	380-480VAC +/-10%	432VDC / 216VDC (VDC = VAC x 0.9) / (VDC = VAC x 0.45)	0.7ADC	0.5ADC	Internal Activation*
Rectifier Electronics Protected with Potting Option "V"								
GVE20V Full-Wave	19141030	Black	230VAC	110-275VAC +/- 10%	205VDC (VDC = VAC x 0.9)	1.5ADC	1.0ADC	External Contact
GHE40V Half-Wave	19141040	Yellow	480VAC	200-480VAC +/- 10%	216VDC (VDC = VAC x 0.45)	2.0ADC	1.0ADC	External Contact
GHE50V Half-Wave	19141050	Grey	575VAC	200-575VAC +/- 10%	259VDC (VDC = VAC x 0.45)	2.0ADC	1.0ADC	External Contact

* Voltage based - deactivated with a jumper between terminals 3 & 4

BRAKES

Send Quote Requests to info@automatedpt.com
Call +1(800)985-6929 To Order or Order Online At Nordgearmotors.com

Send Quote Requests to info@automatedpt.com
Call +1(800)985-6929 To Order or Order Online At Nordgearmotors.com



Hand Release Lever (HL)

Mod

The hand release option allows the brake to be manually released without requiring that the brake be energized with voltage. The lever has a spring return that allows the brake to be hand released and returned automatically to its set position. The hand release lever can be unscrewed for easy removal.

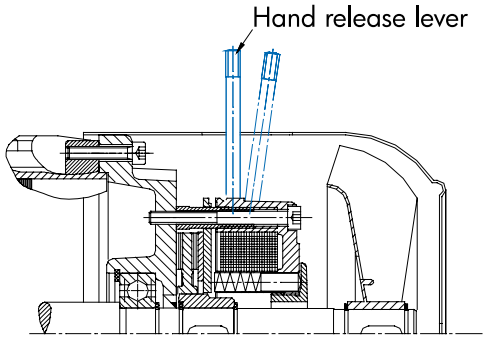

Locking Hand Release Lever (FHL)

Mod

This option allows the brake to be manually released and locked off without requiring voltage to the brake. The lock mechanism prevents the spring from returning the brake to a closed state without manual action by the user. The hand release lever can be unscrewed for easy removal.

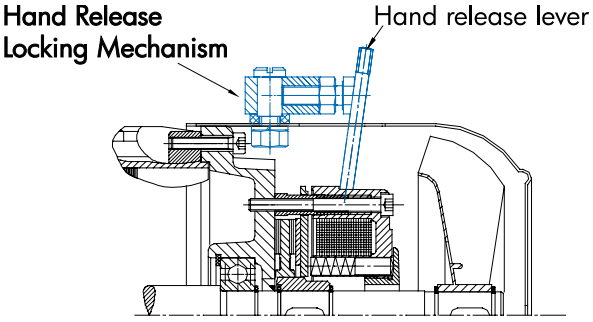

Hand Release Lever With Hole (HLH)

Build

The hand release levers can be provided with a 5.5mm through hole. The hole can be used for attaching external pulling devices such as a cord to release the brake at a distance. This option is available for brake sizes BRE5 to BRE60.

Hand Release Lever Location Required for HL, FHL and HLH

- ❍ Position 1
- ❍ Position 2
- ❍ Position 3
- ❍ Position 4

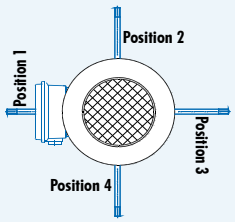

Corrosion Protected Brake (RG)

Build

The brake is fitted with a stainless steel brake plate to provide additional corrosion protection in severe and wet environments.

Dust & Corrosion Protected Brake (SR)

Build

A rubber-sealing boot is installed on the brake to provide additional protection in dusty environments. This feature includes the stainless steel brake plate (RG).

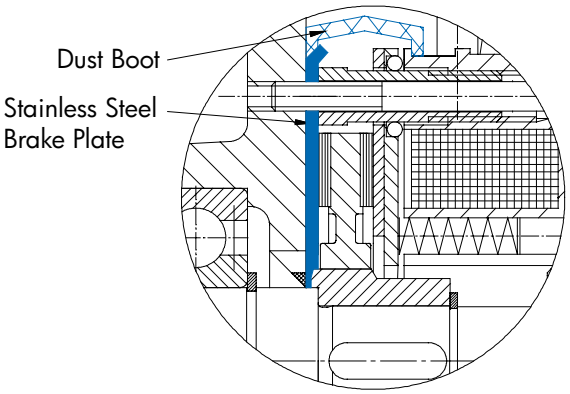

IP66 Brake Enclosure (IP66)

Build

A sealed brake with IP66 enclosure protection can also be provided. This brake has a different mechanical housing that provides a higher degree of protection against severe environments.

Brake Heating

Build

Brakes can be provided with a number of different heating systems. Contact NORD to discuss the details of your application

Send Quote Requests to info@automatedpt.com
Call +1(800)985-6929 To Order or Order Online At Nordgearmotors.com

Send Quote Requests to info@automatedpt.com Call +1(800)985-6929 To Order or Order Online At Nordgearmotors.com

Options



Quiet Brake Release (NRB1)

Build

To reduce the noise of the brake release, an o-ring can be placed between the brake coil body and the armature plate (stationary disc). The o-ring dampens the impact caused by the armature plate hitting the brake coil body during the release process. When ordering NRB1, the SR (Dust Boot) option is required. The SR option also includes the RG stainless steel corrosion plate.

Quiet Brake Motor Operation (NRB2)

Build

Noise due to vibration in the brake components is possible during motor operation particularly with variable frequency drive or single phase motor operation. To reduce this vibration the brake can be constructed with an o-ring between the brake carrier hub and the armature plate. This o-ring will prevent the clattering caused by the rapid micro speed changes in the motor caused by inverter or single phase operation.

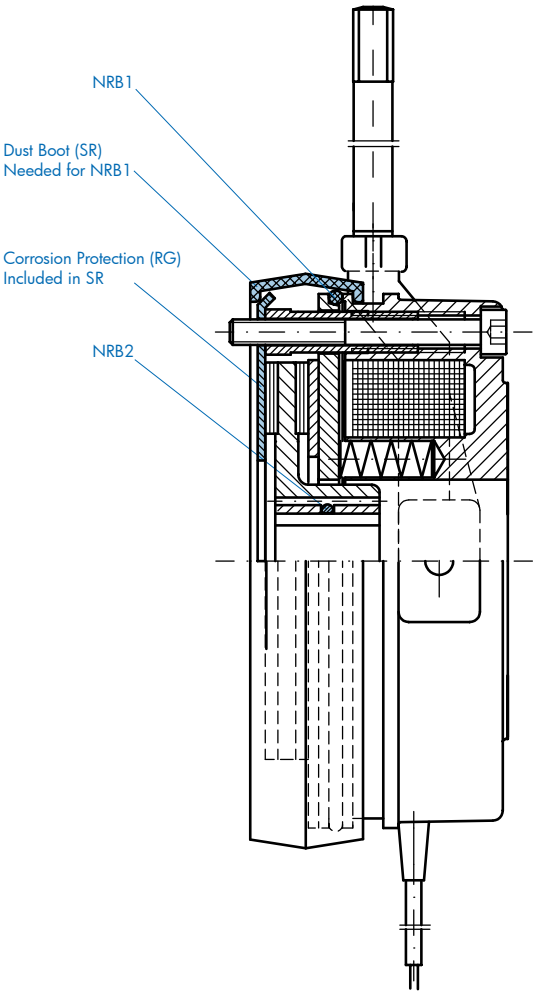

Micro Switch (MIK)

Build

The micro switch monitors the release state of the brake and can be wired into external control circuitry to provide additional safety. The switch can also be used to detect certain brake service problems including excessive brake wear.

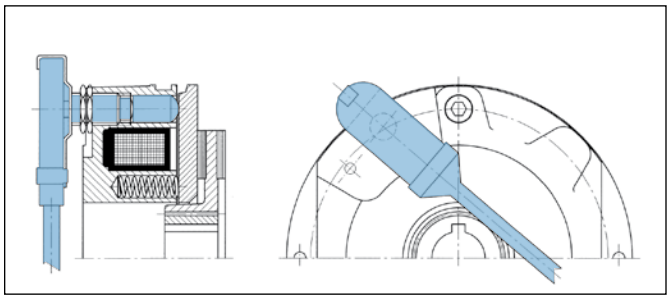

Brass Foil (FBR)

Build

NORD brakes can be fitted with a brass foil in between the armature plate and the brake coil body. The foil acts as a magnetic resistance to weaken the brake coil's magnetic attraction to the armature plate. The weaker magnetic attraction between the armature plate and the brake coil will provide faster brake reaction (stopping) times. The brake release (start) times will be increased. The brass foil is normally used in combination with the fast GP rectifiers in over excitation mode.

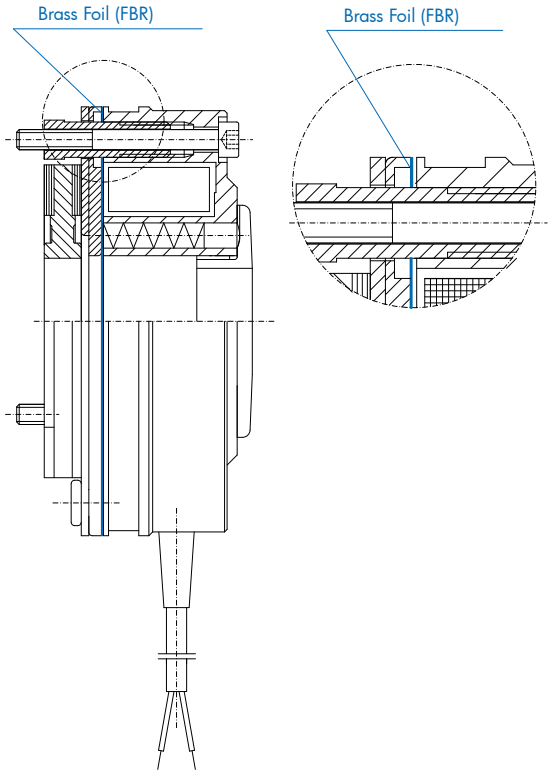

BRAKES

Send Quote Requests to info@automatedpt.com
Call +1(800)985-6929 To Order or Order Online At Nordgearmotors.com



Options

Current Sensing Relay (IR)

Mod

The current sensing relay, is used to achieve a fast brake engagement (stopping) without the use of external control equipment or additional wiring. The relay is mounted directly on the conduit box, and is powered from the motor's terminal block. The power leads for the relay replace one of the brass jumper bars on the terminal block of any single speed motor. The switch leads are connected to terminals 3 and 4 of the rectifier. When the power to the motor is shut off, the IR relay opens the brake circuit on the DC side which allows the brake to de-magnetize quickly.

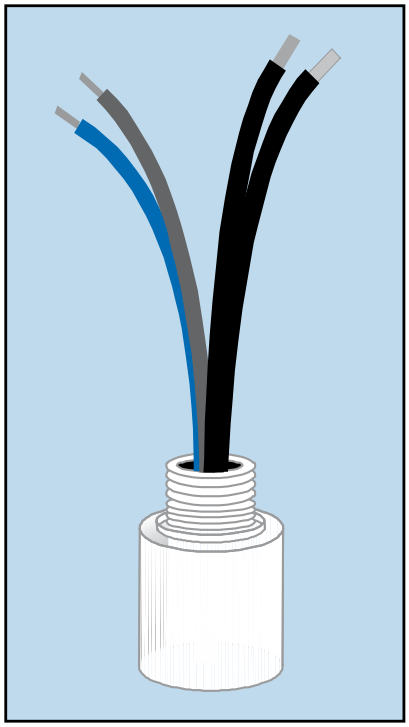

CAUTIONS

Requirements

- Brake must be powered from the motor's terminal block (not seperately powered)
- Motor must be a single speed and should not be powered by a frequency inverter or soft starter.

Ratings

Part number	18556010	18556020
Motor Frame Sizes	*63S - 180M	180L - 225M
AC Input Current - black/white wires	25AAC 75 AAC - 0.2 s	50 AAC 75 AAC - 0.2 s
DC Brake Current - red/blue wires	2.0 ADC	2.0 ADC
Additional Brake Setting Delay	18 ms	18 ms
Ambient Temperature	- 40 to 75 °C - 40 to 167 °F	- 40 to 75 °C - 40 to 167 °F
Enclosure Rating	IP65	IP65

* For 180MX motor frame at 230/460V use part number 18556020

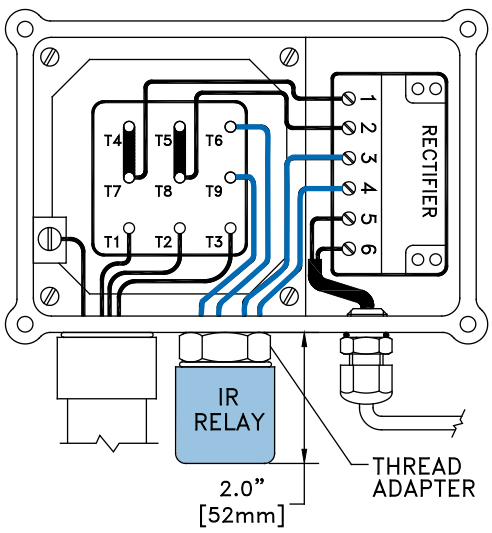

Connection Notes

Rectifier			IR-Relay Wires to Rectifier	
Model Type	Part Number	Design	Red	Blue
GVE20L	19141000	Full-wave	3	4
GHE40L	19141010	Half-wave	4	3
GHE50L	19141020	Half-wave	4	3
GPE20L	19140230	Push-hybrid	4	3
GPE40L	19140240	Push-hybrid	4	3

Conduit Box Thread Adapter

Thread	Motor Frame	Part Number	O-Ring
M20	63-71	18542006	25501615
M25	80-90	18522253	25501615
M32	100-132	18522320	25501615
M40	160-180	18522400 & 18522253	25501615

BRAKES

Send Quote Requests to info@automatedpt.com
Call +1(800)985-6929 To Order or Order Online At Nordgearmotors.com

Options



Double Brakes (DBR)

Build

Some applications require two independent brakes to meet industry safety guidelines.

Double Brakes for Theatrical Applications

Many international standards for braking systems used on theatre hoists mandate the use of brakes that automatically set when power is removed. Redundancy is also required with the system brakes. If one brake fails, the other brake can still operate the system by running independently and parallel to each other. NORD DBR (2xBRE) brake systems are designed to meet these requirements. The NORD double brakes are also designed for quiet operation < 50dB(A).

Some safety standards require that the load brake hold 1.25 times the rated load at test. We recommend selecting the brake for approximately 1.6 to a maximum of 2.0 times the required operating torque for each brake.

The NORD double theatre brakes do not need to be worn-in and will achieve their full braking toque initially.

Two brake rectifiers are required for operating a double brake systems. These will be provided as loose parts and are normally mounted in the customers control panel.

The double brake option will add motor length compared to the single brake.

CAUTIONS

- NORD recommends delayed operation of one of the brakes. If the brakes are operated simultaneously, the combined torques may result in excessive torque for the gear unit or other mechanical system elements. If the brakes are set at the same time even in an E-stop condition, the gear units must be sized to handle this increased torque.

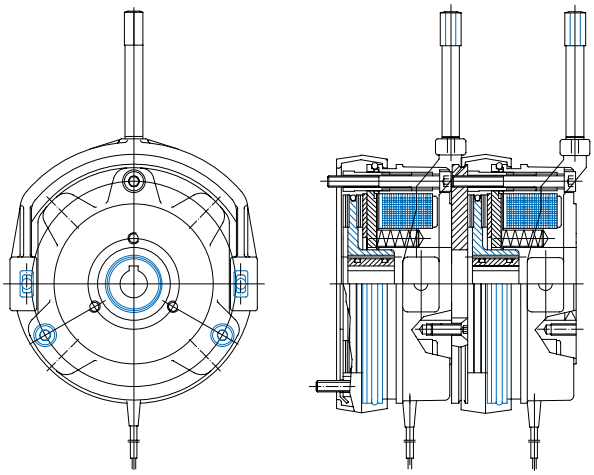

BRAKES

Motor	Brake	7 Springs		5 Springs		4 Springs	
		[Nm]	[lb-ft]	[Nm]	[lb-ft]	[Nm]	[lb-ft]
63S/L	DBR6	2 x 6	2 x 4.4	2 x 4	2 x 3	2 x 3.5	2 x 2.6
71S/L	DBR6	2 x 6	2 x 4.4	2 x 4	2 x 3	2 x 3.5	2 x 2.6
80S	DBR6	2 x 6	2 x 4.4	2 x 4	2 x 3	2 x 3.5	2 x 2.6
80L	DBR12	2 x 12.5	2 x 9.2	2 x 8.5	2 x 6.3	2 x 7	2 x 5.2
90S	DBR12	2 x 12.5	2 x 9.2	2 x 8.5	2 x 6.3	2 x 7	2 x 5.2
90L	DBR25	2 x 25	2 x 18.4	2 x 17.5	2 x 12.9	2 x 14	2 x 10.3
100L	DBR25	2 x 25	2 x 18.4	2 x 17.5	2 x 12.9	2 x 14	2 x 10.3
100LA/4	DBR50	2 x 50	2 x 37	2 x 35	2 x 26	2 x 28	2 x 20.7
112M	DBR50	2 x 50	2 x 37	2 x 35	2 x 26	2 x 28	2 x 20.7
132S	DBR75	2 x 75	2 x 55	2 x 52	2 x 38	2 x 42	2 x 31
132M	DBR125	2 x 125	2 x 92	2 x 89	2 x 66	2 x 70	2 x 52
160M	DBR187	2 x 187	2 x 138	2 x 132	2 x 97	2 x 107	2 x 79
160L	DBR187	2 x 187	2 x 138	2 x 132	2 x 97	2 x 107	2 x 79
180MX/LX	DBR300	2 x 300	2 x 221	2 x 225	2 x 166	2 x 150	2 x 111
200L	DBR500	2 x 500	2 x 369	2 x 375	2 x 277	2 x 250	2 x 184

Send Quote Requests to info@automatedpt.com
Call +1(800)985-6929 To Order or Order Online At Nordgearmotors.com

Send Quote Requests to info@automatedpt.com Call +1(800)985-6929 To Order or Order Online At Nordgearmotors.com



Performance Data

Brake Torque Selection

Brake Size		BRE5	BRE10	BRE20	BRE40	BRE60	BRE100	BRE150	BRE250	BRE400	BRE800
Brake torque $_{-max}$	[lb-ft]	3.7	7.4	15	30	44	74	110	185	295	590
	[lb-in]	44	89	177	354	531	885	1330	2200	3500	7100
	[Nm]	5	10	20	40	60	100	150	250	400	800
Power coil P_{20}	[W]	22	28	39	42	50	75	76	100	140	140
Nominal air gap	[in]	0.008	0.008	0.008	0.012	0.012	0.016	0.020	0.020	0.020	0.023
	[mm]	0.2	0.2	0.2	0.3	0.3	0.4	0.5	0.5	0.5	0.6
Maximum air gap (re-adjust) a_{max}	[in]	0.024	0.013	n/a *	0.035	0.039	0.043	0.043	0.047	0.047	0.047
	[mm]	0.6	0.8	n/a *	0.9	1.0	1.1	1.1	1.2	1.2	1.2
Max brake pad wear - must be replaced	[in]	0.118	0.118	0.039	0.118	0.138	0.138	0.138	0.138	0.138	0.138
	[mm]	3	3	1	3	3.5	3.5	3.5	3.5	3.5	3.5
Minimum brake pad thickness	[in]	0.177	0.217	0.295	0.374	0.453	0.492	0.571	0.571	0.650	0.650
	[mm]	4.5	5.5	7.5	9.5	11.5	12.5	14.5	14.5	16.5	16.5
Max work per cycle W_{rmax}	[Jx10^3]	3	6	12	25	35	50	75	105	150	225
Work until re-adjust W_{rn}	[Jx10^7]	5	12	20	35	60	125	200	340	420	420
Heat load per cycle	[J/s]	80	100	130	160	200	250	300	350	400	600
Release time (start) t_1	[ms]	35	45	70	80	120	160	200	220	230	400
Release time (start) $t_{1\text{-}OE}$	[ms]	15	15	28	28	75	110	110	N/A	N/A	N/A
Setting time (stop) $t_{2\text{-}AC}$	[ms]	70	95	140	175	210	280	350	500	800	1000
Setting time (stop) $t_{2\text{-}DC}$	[ms]	30	45	30	75	90	120	150	180	200	250
Setting time (stop) $t_{2\text{-}DCRP}$	[ms]	5	6	11	12	12	13	17	24	N/A	N/A
IR relay delay (stop) $t_{2\text{-}IR}$	[ms]	18	18	18	18	18	18	18	18	18	N/A
Current – 250VDC coil	[A]	0.09	0.11	0.16	0.18	0.19	0.31	0.31	0.4	0.6	0.6
Current – 225VDC coil	[A]	0.09	0.13	0.18	0.20	0.22	0.35	0.36	0.5	0.6	0.6
Current – 205VDC coil	[A]	0.11	0.13	0.22	0.24	0.28	0.44	0.45	0.5	0.7	0.7
Current – 180VDC coil	[A]	0.12	0.16	0.21	0.25	0.30	0.46	0.47	0.6	0.8	0.8
Current – 105VDC coil	[A]	0.21	0.32	0.36	0.46	0.60	0.88	0.89	1.1	1.3	1.3
Current – 24VDC coil	[A]	0.92	1.17	1.63	1.75	2.08	3.10	3.20	4.2	5.9	5.9

Detailed Brake Performance Data

Release times

t_1 – Brake release time - Standard
$t_{1\text{-}OE}$ – Brake release time – Overexcitation (GP)

Set (stop) times

$t_{2\text{-}AC}$ – Brake set time – AC switching
$t_{2\text{-}DC}$ – Brake set time – DC switching
$t_{2\text{-}DCRP}$ – Brake set time – DC switching reduced power
$t_{2\text{-}IR}$ – Additional brake stopping of the IR relay

An increased air gap will alter the braking times.

Send Quote Requests to info@automatedpt.com
Call +1(800)985-6929 To Order or Order Online At Nordgearmotors.com

Send Quote Requests to info@automatedpt.com Call +1(800)985-6929 To Order or Order Online At Nordgearmotors.com

Brake Calculations



Brake Size Calculation

Torque and inertias below are based on the motor speed. Load side torques must always be divided by the gear reduction ratio. Inertias must be divided by the *square* of the gear ratio. You must also consider any external reduction ratio outside the gearbox.

Selection for holding loads (static)

$$T_{req} = T_{stat} = T_{load} \times K$$

Selection for stopping loads (static + dynamic)

$$\sum J = J_{motor} + \frac{J_{load}}{i^2}$$

Typically other inertias, like the gearbox, can be ignored.

$$T_{dyn} = \frac{\sum J \times n}{25.7 \times t_r}$$

$$T_{req} = (T_{dyn} \pm T_{load}) \times K$$

For driving loads use: $-T_{load}$
For overhauling loads use: $+T_{load}$

Brake Work Verification

$$W = \frac{\sum J \times n^2}{5880} \times \frac{T_B}{T_B \pm T_{load}} \Rightarrow W \leq W_{max}$$

For driving loads use: $+T_{load}$
For overhauling loads use: $-T_{load}$

The permissible values for W_{max} (Friction work) depend on the stopping frequency. See diagram at right.

In applications where the brake is operated frequently, two brake work values should be evaluated to ensure adequate brake life: the braking work compared to the braking frequency and the maximum work limit for a single operation, such as an E-stop. Reviewing these two values will help determine the optimal solution and ensure long brake life.

Abbreviation Key

c/h	=	Number of brakes per hour
J [lb-ft²]	=	Inertia
J_{motor} [lb-ft²]	=	Motor inertia
i	=	System reduction ratio
K	=	Safety factors. Based on application and according to industry rules and practices Hoisting >2 Hoisting with people >2..3 Travel drives 0.5 to 1.5
T_B [lb-in]	=	Brake torque
T_{dyn} [lb-in]	=	Dynamic torque
T_{req} [lb-in]	=	Required brake torque
T_{load} [lb-in]	=	Load torque
T_{stat} [lb-in]	=	Static torque
n [rpm]	=	Motor speed
t_r [sec]	=	Stopping time
W [J]	=	Brake work
W_{max} [J]	=	Maximum brake work for one brake operations

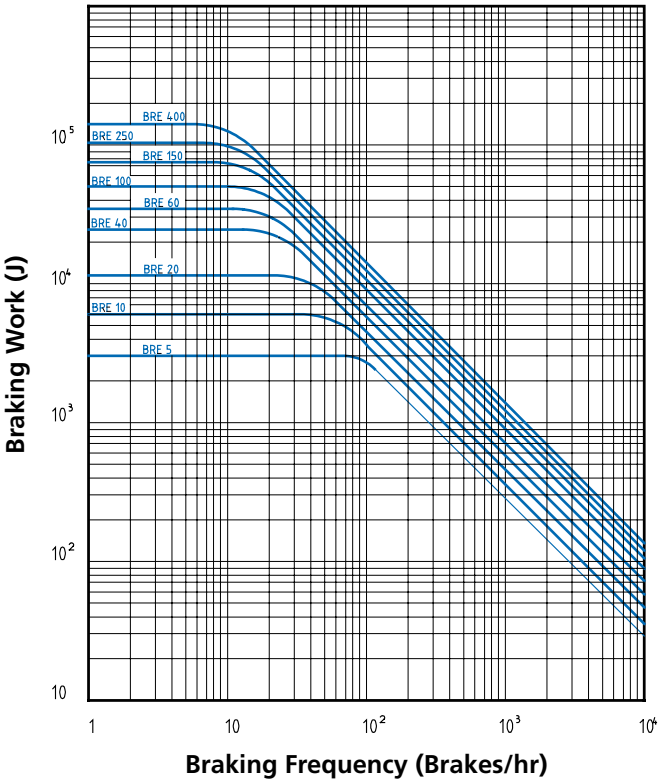

BRAKES

Send Quote Requests to info@automatedpt.com
Call +1(800)985-6929 To Order or Order Online At Nordgearmotors.com

Send Quote Requests to info@automatedpt.com
Call +1(800)985-6929 To Order or Order Online At Nordgearmotors.com

Typical Connection Diagrams

230/460V, 60Hz, 3ø

BR101 — 230/460V, 60Hz, 3ø BRAKE WITH STANDARD FULL–WAVE RECTIFIER — 10

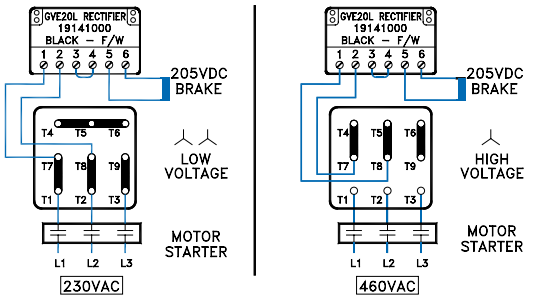

BR102 — 230/460V, 60Hz, 3ø BRAKE WITH STANDARD FULL & HALF–WAVE RECTIFIER WIRED TO SEPARATE POWER SOURCE — 20

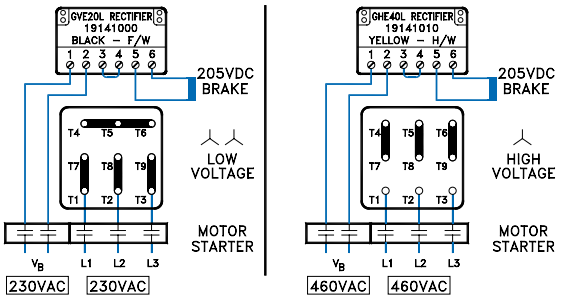

BR103 — 230/460V, 60Hz, 3ø BRAKE WITH STANDARD FULL–WAVE RECTIFIER WIRED FOR DC SWITCHING — 15

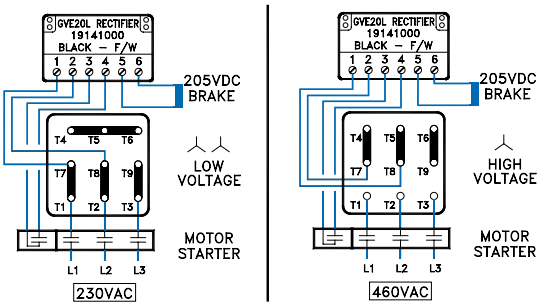

BR104 — 230/460V, 60Hz, 3ø BRAKE WITH STANDARD FULL & HALF–WAVE RECTIFIER SEPARATE POWER SOURCE & DC SWITCHING — 25

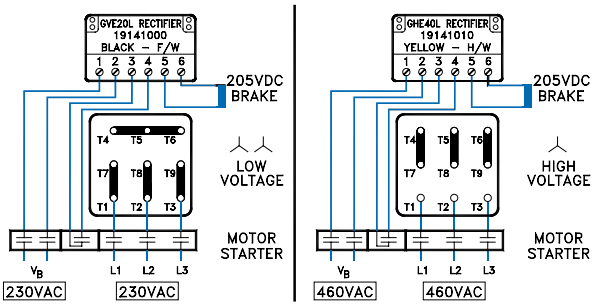

BR201 — **FOR MOTOR FRAMES 160 & LARGER, A 9 POST "T" STYLE TERMINAL BLOCK WILL BE USED. THE T–BLOCK NUMBERING WILL BE THE SAME AS THE "SQUARE" STYLE SHOWN IN BR101 THRU BR104.

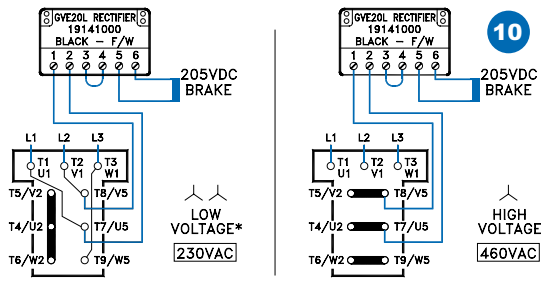

TYPICAL VIEW OF TERMINAL BOX WITH WIRING
("SQUARE" 9 POST TERMINAL)

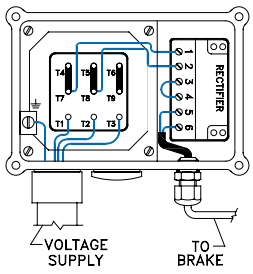

208/360V, 60Hz, 3ø

BR301 — 208/360V, 60Hz, 3ø BRAKE WITH STANDARD FULL–WAVE RECTIFIER — 10

BR302 — 208/360V, 60Hz, 3ø BRAKE WITH STANDARD FULL–WAVE RECTIFIER WIRED FOR DC SWITCHING — 15

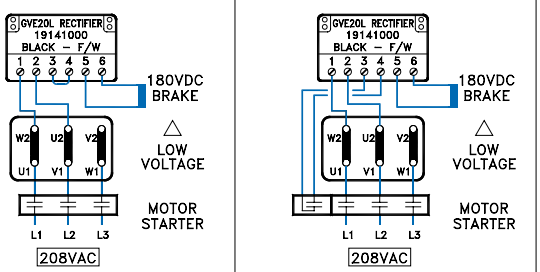

= Braking Method

BRAKES

Send Quote Requests to info@automatedpt.com
Call +1(800)985-6929 To Order or Order Online At Nordgearmotors.com

Connections



Typical Connection Diagrams

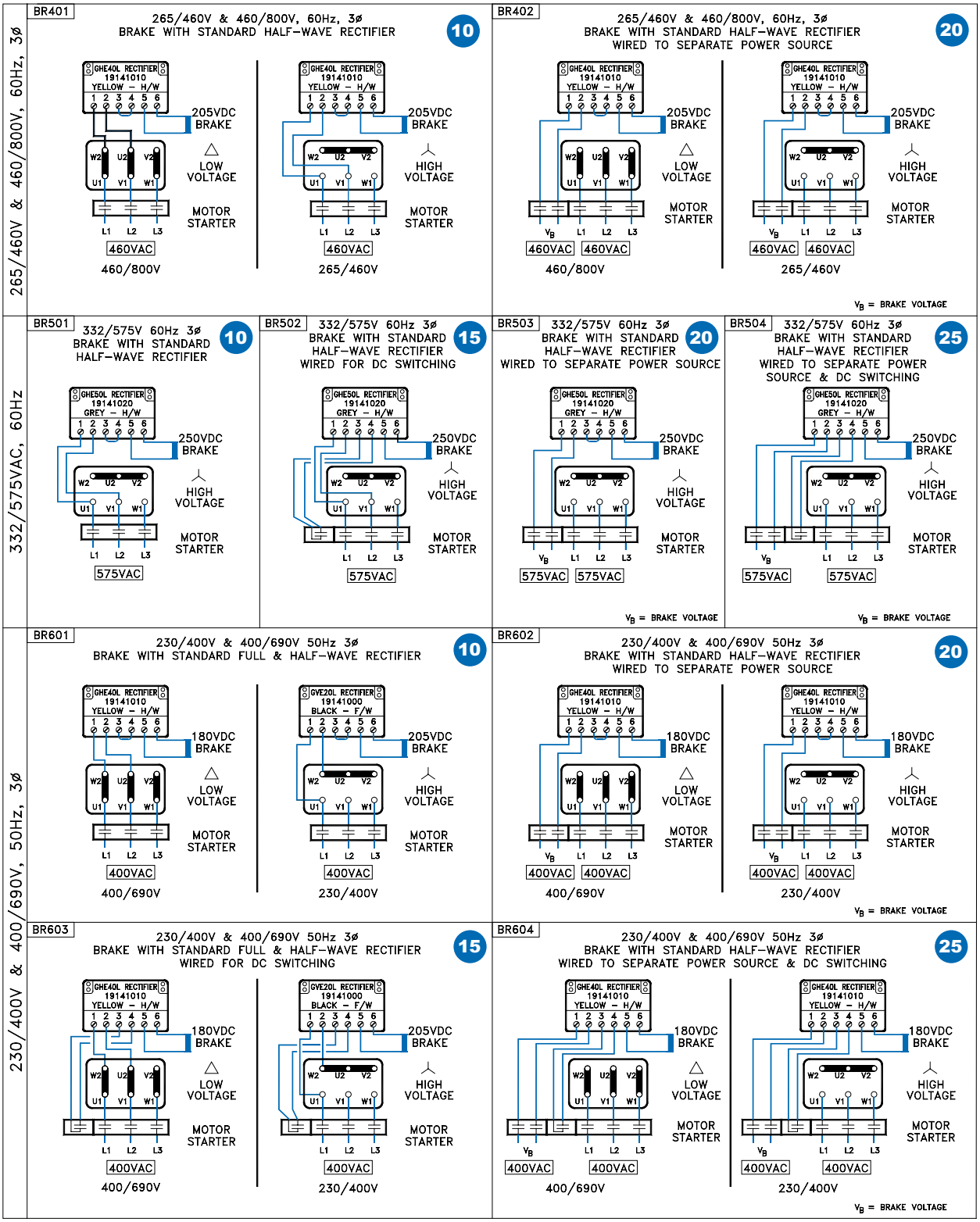

= Braking Method

Send Quote Requests to info@automatedpt.com
Call +1(800)985-6929 To Order or Order Online At Nordgearmotors.com



Connections

Inverter Driven Brakemotors

Connection Guide for Brakes with AC-Switching

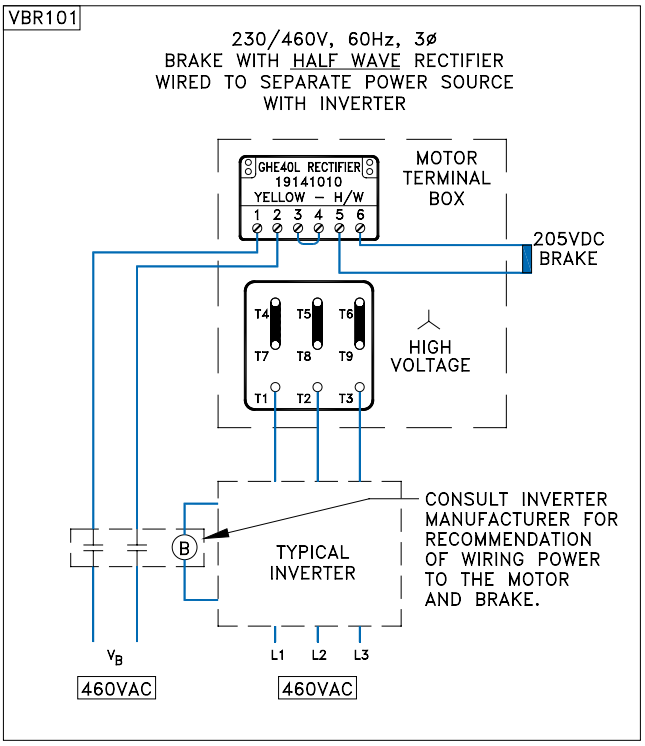

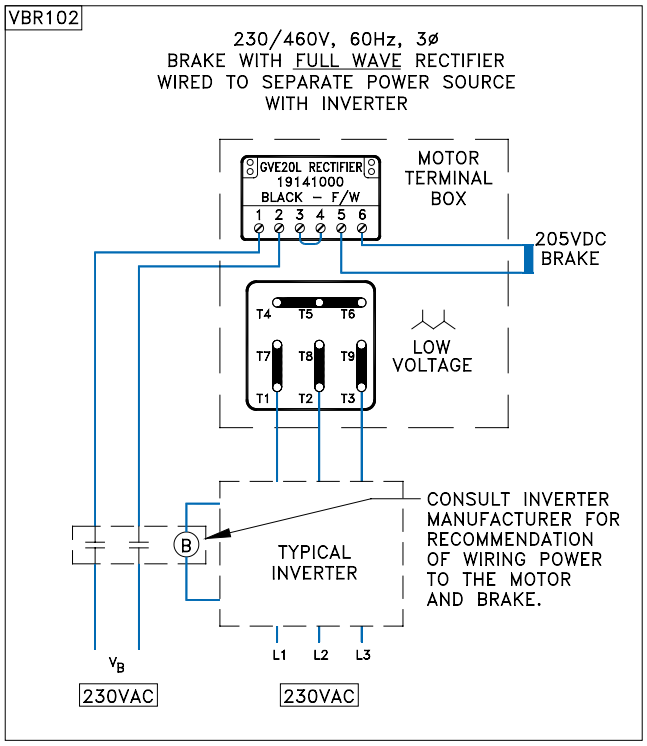

Connection Guide for Brakes with DC-Switching

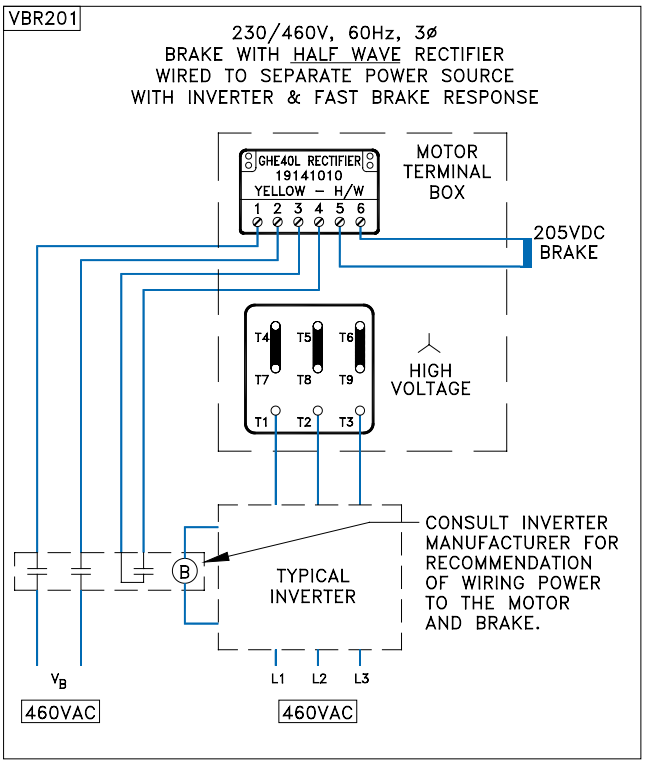

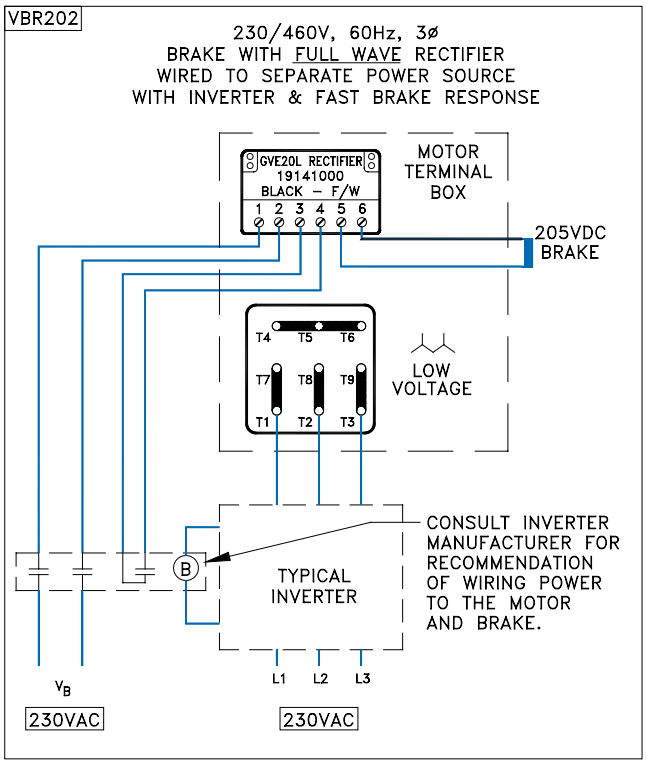

Send Quote Requests to info@automatedpt.com
Call +1(800)985-6929 To Order or Order Online At Nordgearmotors.com

Connections



GPE & GPU Rectifier - Connection Diagrams

Motor Across the-Line Operation
Brake Powered from the motor terminal block

GP101 — **30**

START – FAST RELEASE (OVEREXCITATION)
STOP – NORMAL STOP (AC–SWITCHING)
BSG TYPE – EXTERNAL DC–SWITCHING
TERMINAL 3 & 4 – JUMPERED
V_B = BRAKE VOLTAGE = 230V

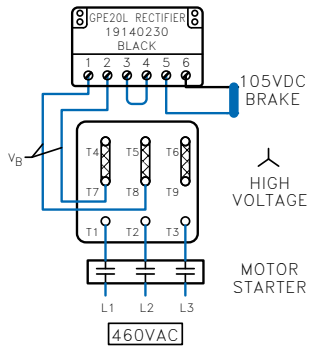

GP102 — **35**

START – FAST RELEASE (OVEREXCITATION)
STOP – FAST STOP (DC–SWITCHING)
BSG TYPE – EXTERNAL DC–SWITCHING
TERMINAL 3 & 4 – CONTACT OR IR RELAY
V_B = BRAKE VOLTAGE = 230V

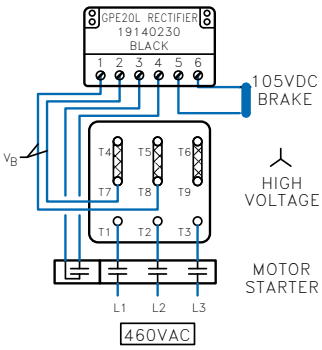

GP103 — **40**

START – STANDARD RELEASE
STOP – VERY FAST STOP
(REDUCED POWER HOLD DC–SWITCHING)
BSG TYPE – EXTERNAL DC–SWITCHING
TERMINAL 3 & 4 – CONTACT OR IR RELAY
V_B = BRAKE VOLTAGE = 230V

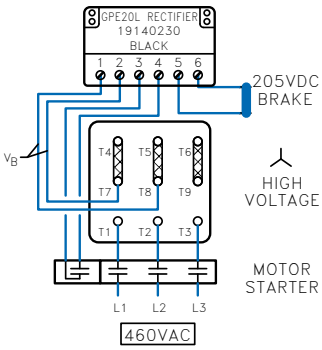

= Braking Method

Power supplied from a seperate power source.
Use with inverters, soft starters, and multi-speed motors

GP104 — **45**

START – FAST RELEASE (OVEREXCITATION)
STOP – NORMAL STOP (AC–SWITCHING)
BSG TYPE – INTEGRATED DC–SWITCHING
TERMINAL 3 & 4 – JUMPERED

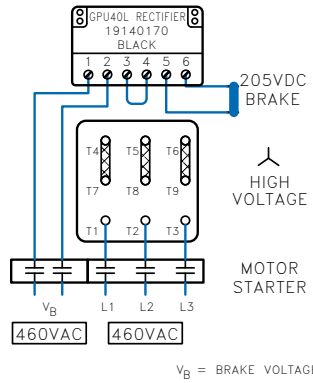

V_B = BRAKE VOLTAGE

GP105 — **50**

START – FAST RELEASE (OVEREXCITATION)
STOP – FAST STOP (DC–SWITCHING)
BSG TYPE – INTEGRATED DC–SWITCHING
TERMINAL 3 & 4 – NOT JUMPERED (OPEN)

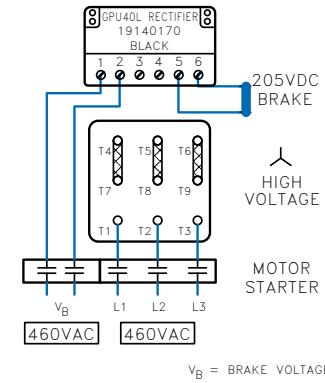

V_B = BRAKE VOLTAGE

GP106 — **55**

START – STANDARD RELEASE
STOP – VERY FAST STOP
(REDUCED POWER HOLD DC–SWITCHING)
BSG TYPE – INTEGRATED DC–SWITCHING
TERMINAL 3 & 4 – NOT JUMPERED (OPEN)

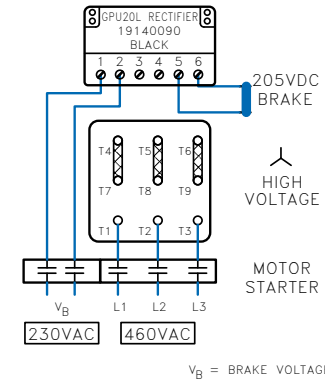

V_B = BRAKE VOLTAGE

= Braking Method

BRAKES

Send Quote Requests to info@automatedpt.com
Call +1(800)985-6929 To Order or Order Online At Nordgearmotors.com



Connections

IR Relay Typical Connection Diagrams

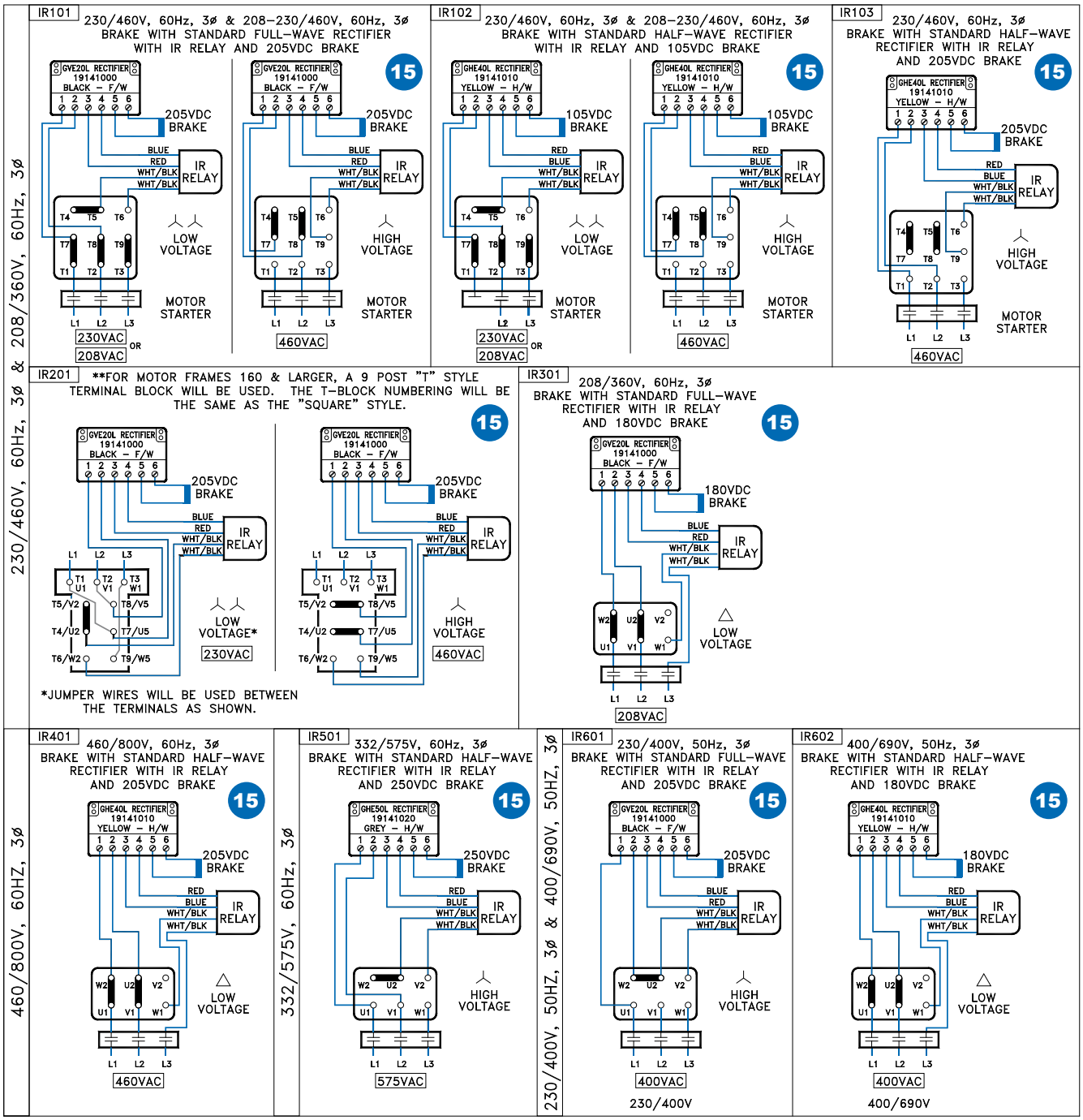

= Braking Method

CAUTIONS

Requirements

- Brake must be powered from the motor's terminal block (not seperately powered)
- Motor must be a single speed and should not be powered by a frequency inverter or soft starter.

BRAKES

Send Quote Requests to info@automatedpt.com
Call +1(800)985-6929 To Order or Order Online At Nordgearmotors.com

Connections



GPE Rectifier for External DC-Switching with IR Relay

Method Operation

Start - Fast release (Overexcitation)
Stop - Fast stop (DC-Switching)

GPE type - External DC-Switching
Terminal 3 & 4 - Contact or IR-relay

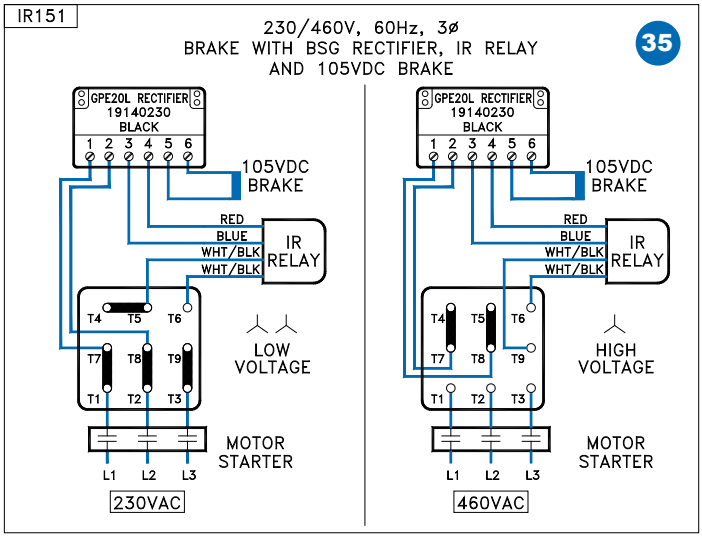

= Braking Method

Method Operation

Start - Standard Release
Stop - Very Fast stop (Reduced power Hold)

GPE type - External DC-Switching
Terminal 3 & 4 - Contact or IR-relay

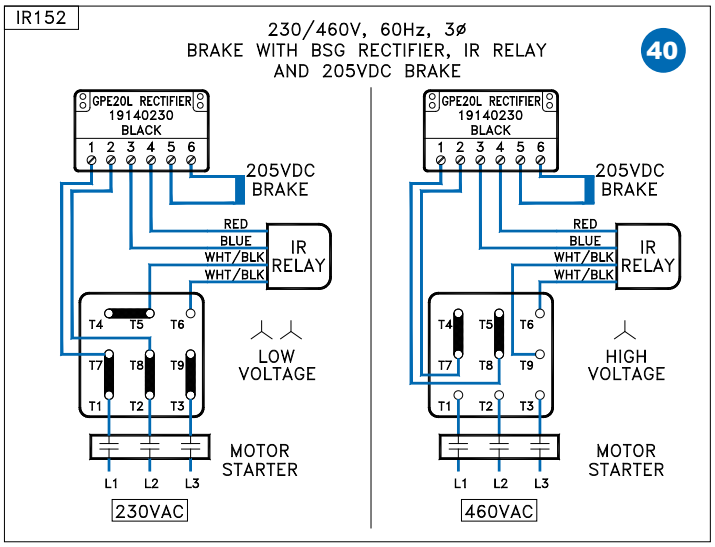

= Braking Method

BRAKES

CAUTIONS

Requirements

- Brake must be powered from the motor's terminal block (not seperately powered)
- Motor must be a single speed and should not be powered by a frequency inverter or soft starter.

Send Quote Requests to info@automatedpt.com
Call +1(800)985-6929 To Order or Order Online At Nordgearmotors.com

Send Quote Requests to info@automatedpt.com
Call +1(800)985-6929 To Order or Order Online At Nordgearmotors.com

Service

- Oil Plugs
  - In-line
  - Clincher™
  - Helical-bevel
  - Helical-worm
- Parts Lists
  - In-line
  - Clincher
  - Helical-bevel
  - Helical-worm
  - Helical Input Stage
  - Motor
  - NEMA C-face
  - Solid Input Shaft - W

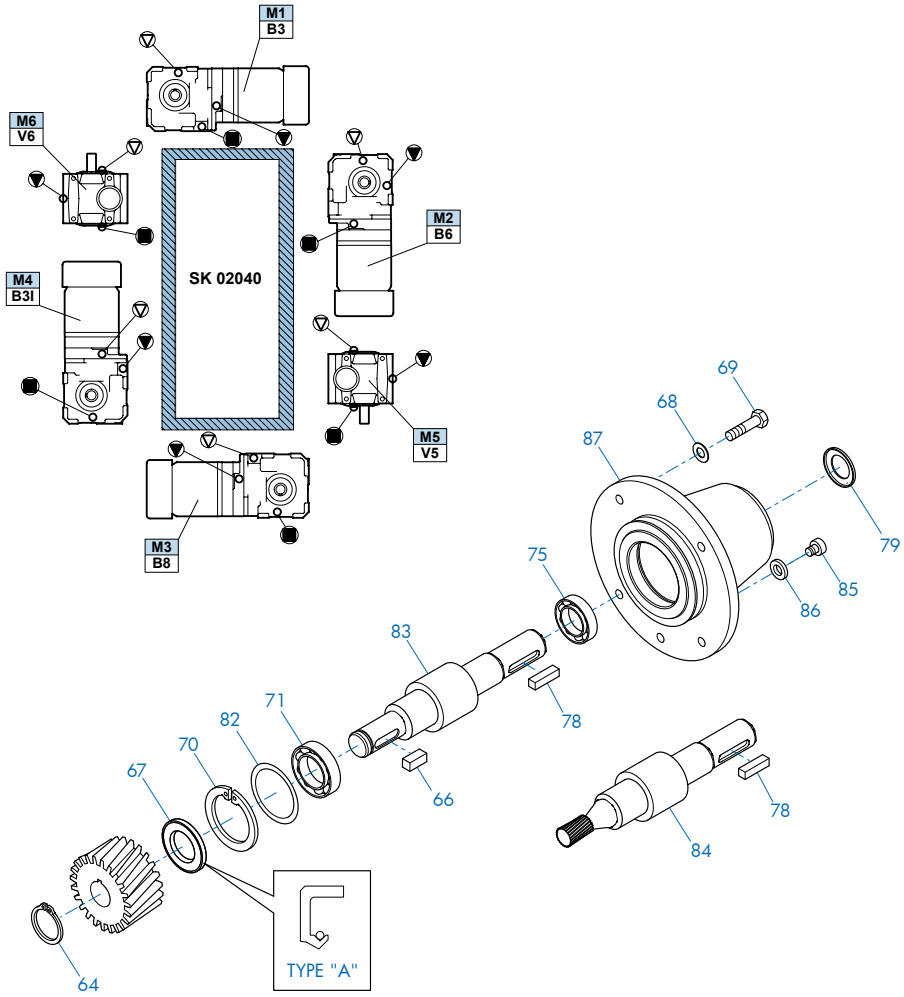

DRIVESYSTEMS

www.nord.com

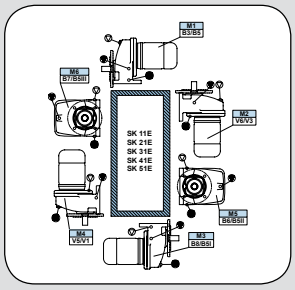

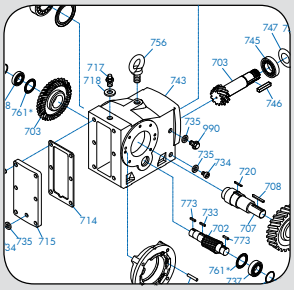

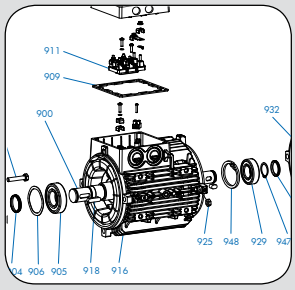

Send Quote Requests to info@automatedpt.com
Call +1(800)985-6929 To Order or Order Online At Nordgearmotors.com

Send Quote Requests to info@automatedpt.com
Call +1(800)985-6929 To Order or Order Online At Nordgearmotors.com

Oil Plugs

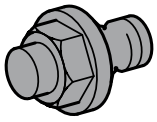

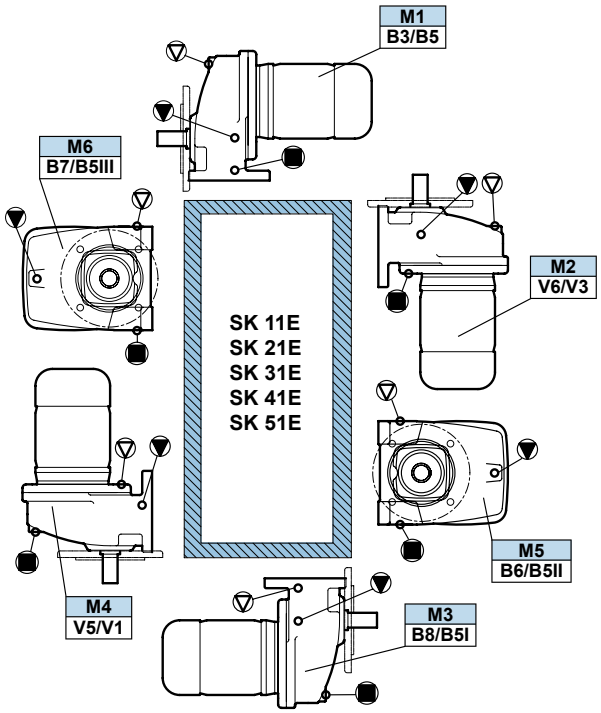

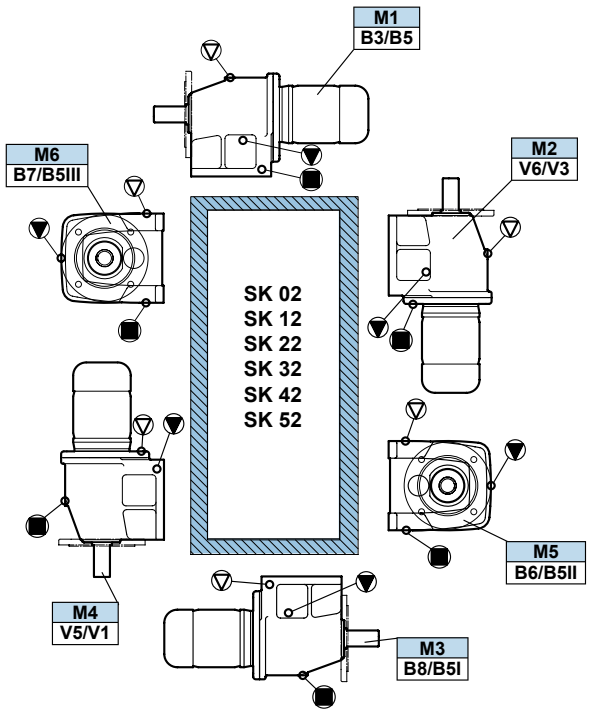

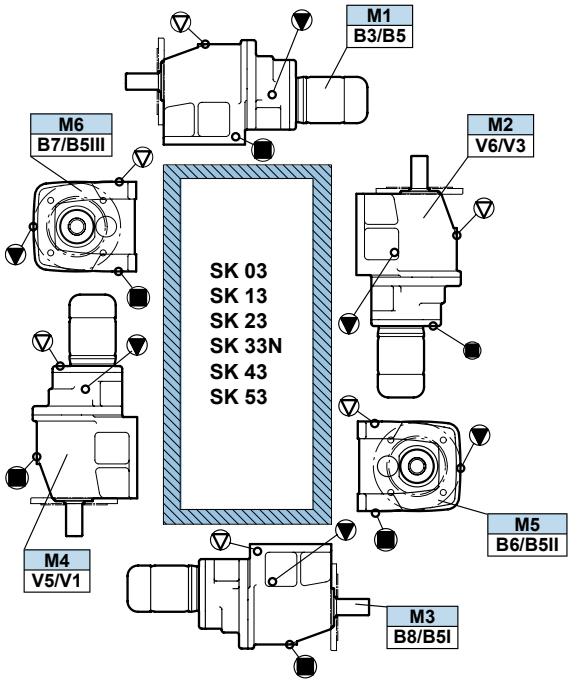

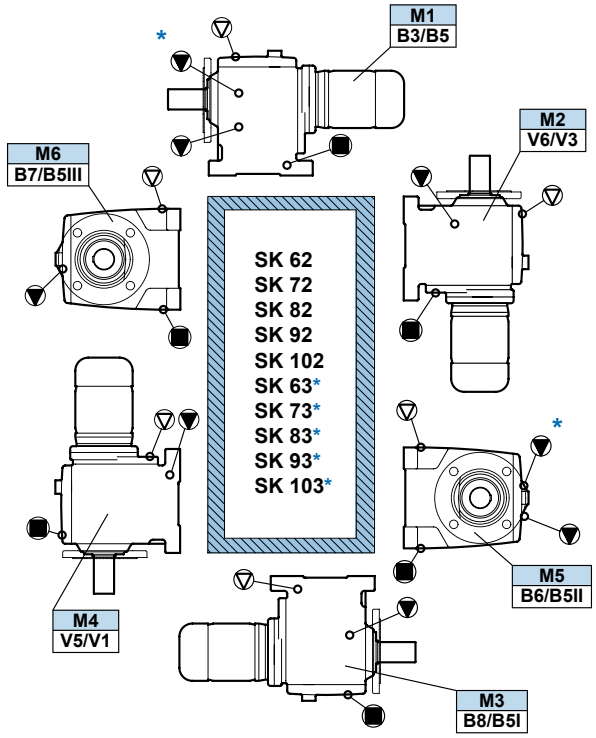

▽ = Vent ▼ = Oil Level ■ = Oil Drain

* Oil level for 3 stage units

SERVICE

Send Quote Requests to info@automatedpt.com
Call +1(800)985-6929 To Order or Order Online At Nordgearmotors.com

Oil Plugs

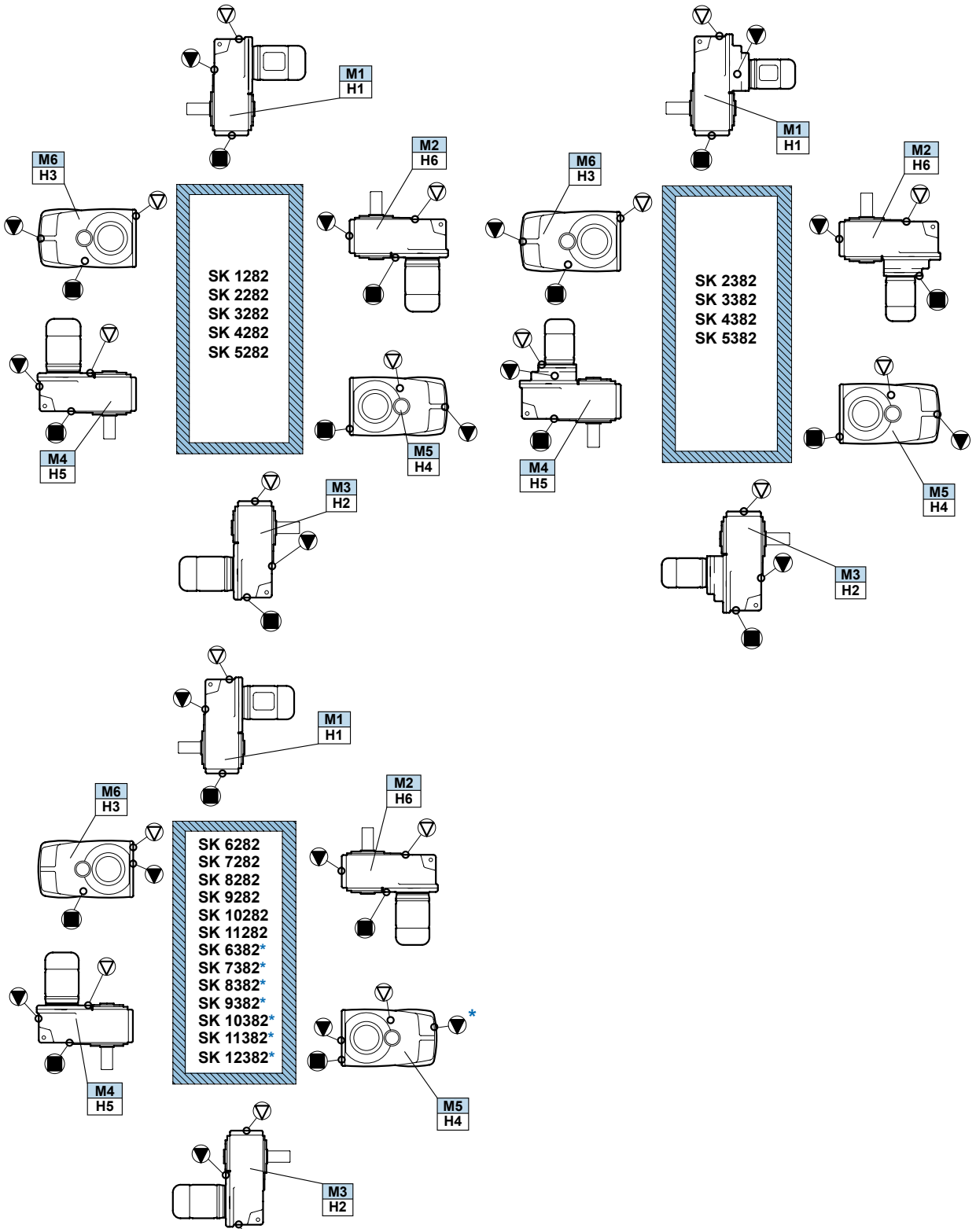

▽ = Vent ▼ = Oil Level ■ = Oil Drain

* Oil level for 3 stage units

✶ Oil level should be verified using the dip stick located in the oil tank for the M4/H5 position.

SERVICE

Send Quote Requests to info@automatedpt.com
Call +1(800)985-6929 To Order or Order Online At Nordgearmotors.com

Send Quote Requests to info@automatedpt.com
Call +1(800)985-6929 To Order or Order Online At Nordgearmotors.com

Oil Plugs

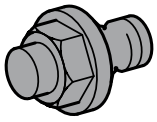

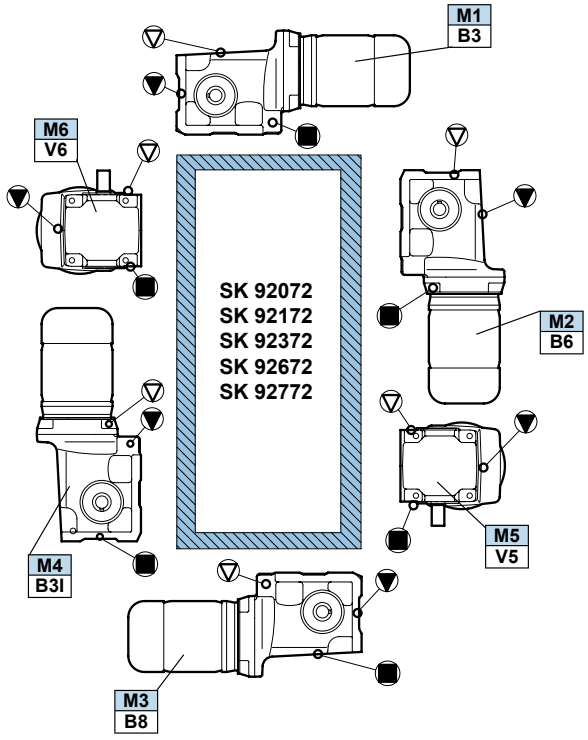

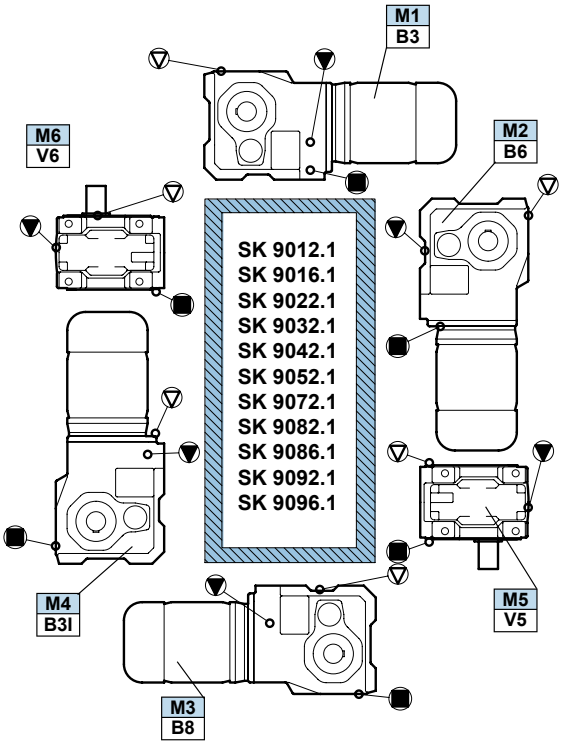

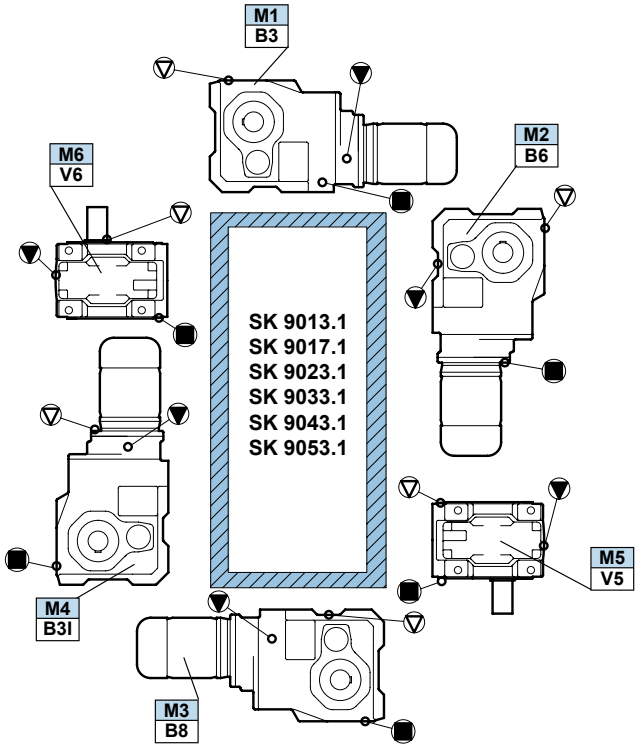

▽ = Vent ▼ = Oil Level ■ = Oil Drain

SERVICE

Send Quote Requests to info@automatedpt.com
Call +1(800)985-6929 To Order or Order Online At Nordgearmotors.com

Send Quote Requests to info@automatedpt.com
Call +1(800)985-6929 To Order or Order Online At Nordgearmotors.com

Oil Plugs

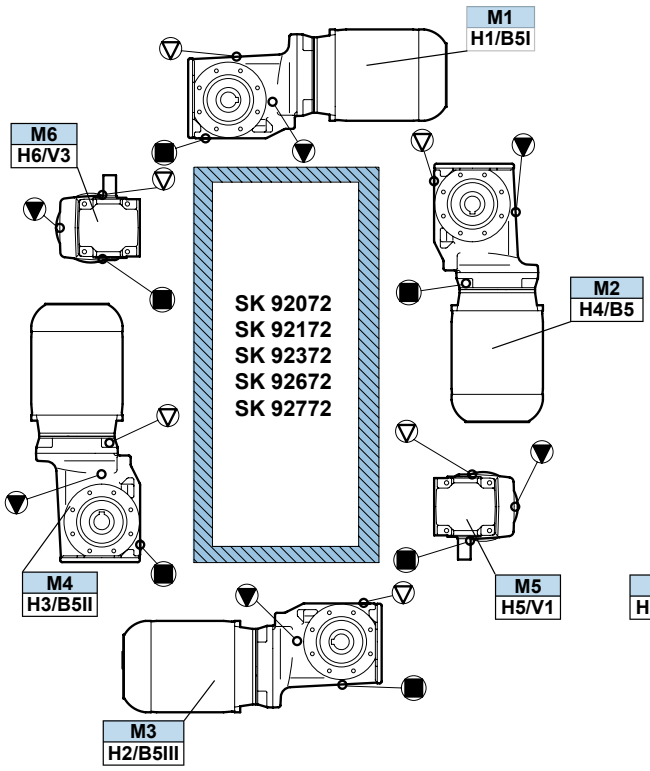

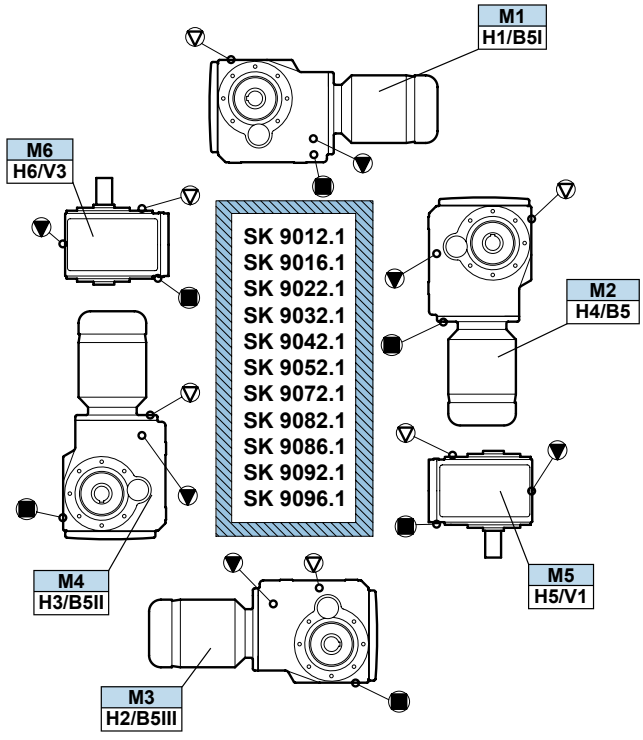

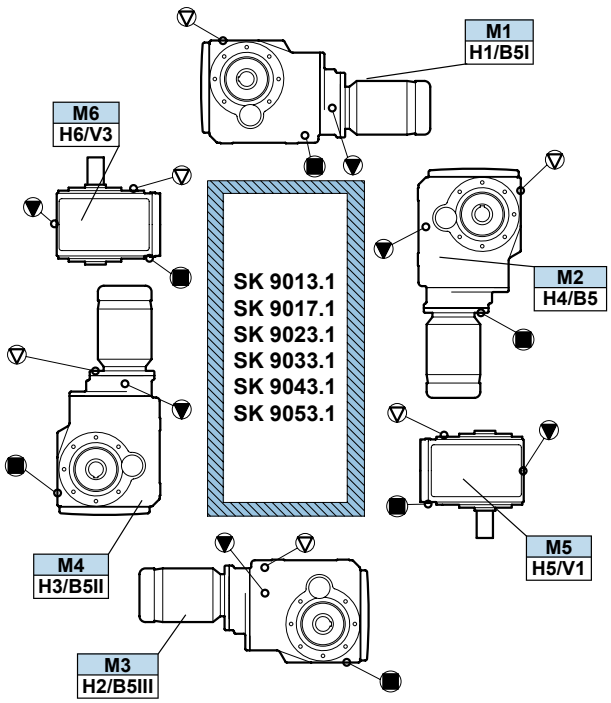

▽ = Vent ▼ = Oil Level ■ = Oil Drain

SERVICE

Send Quote Requests to info@automatedpt.com
Call +1(800)985-6929 To Order or Order Online At Nordgearmotors.com

Oil Plugs

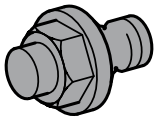

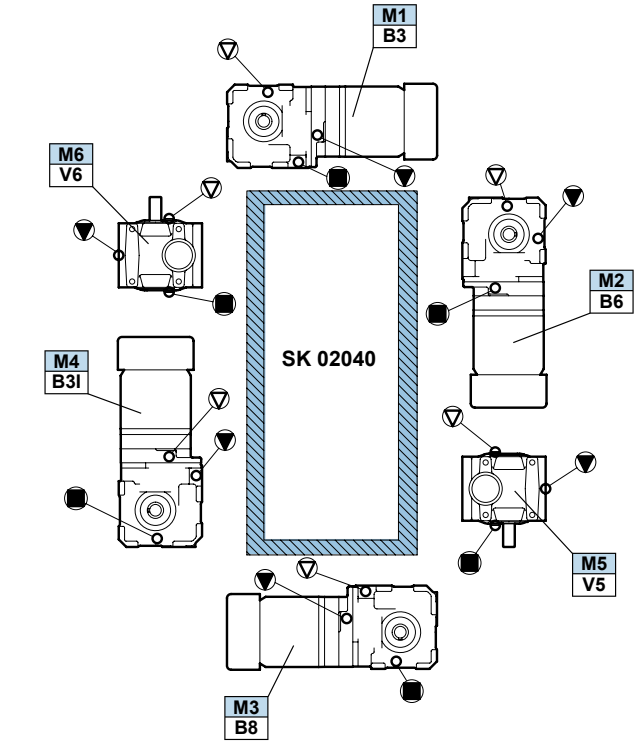

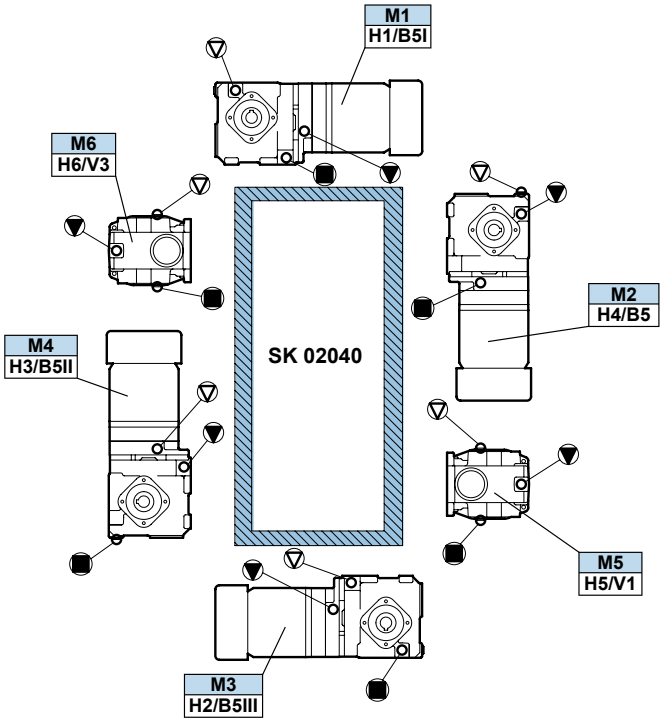

SERVICE

▽ = Vent ▼ = Oil Level ■ = Oil Drain

Send Quote Requests to info@automatedpt.com
Call +1(800)985-6929 To Order or Order Online At Nordgearmotors.com

Send Quote Requests to info@automatedpt.com
Call +1(800)985-6929 To Order or Order Online At Nordgearmotors.com

Oil Plugs

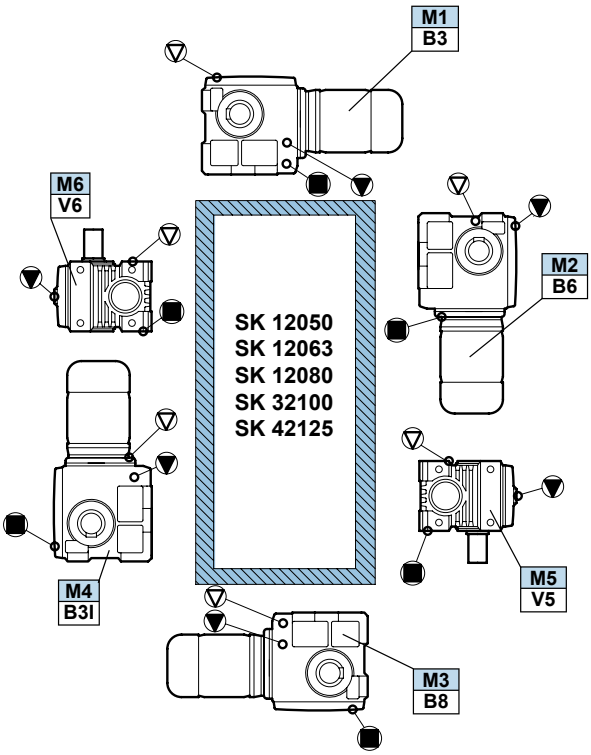

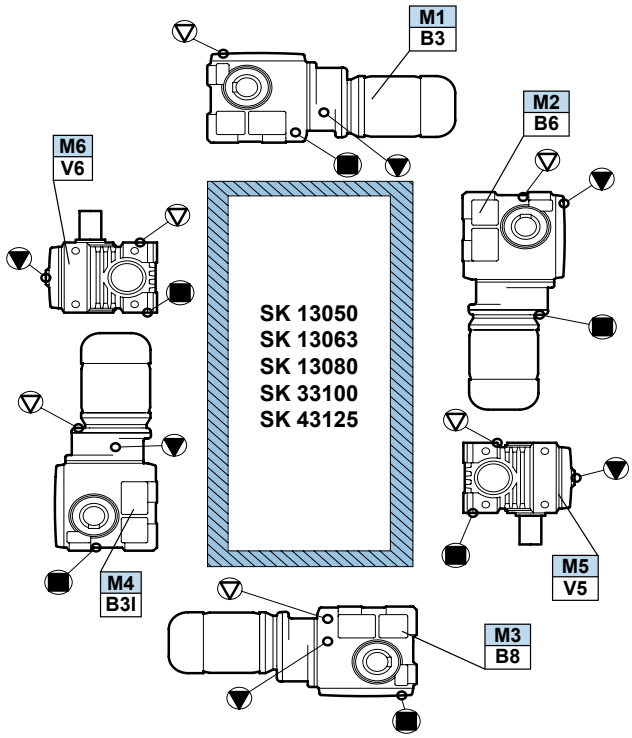

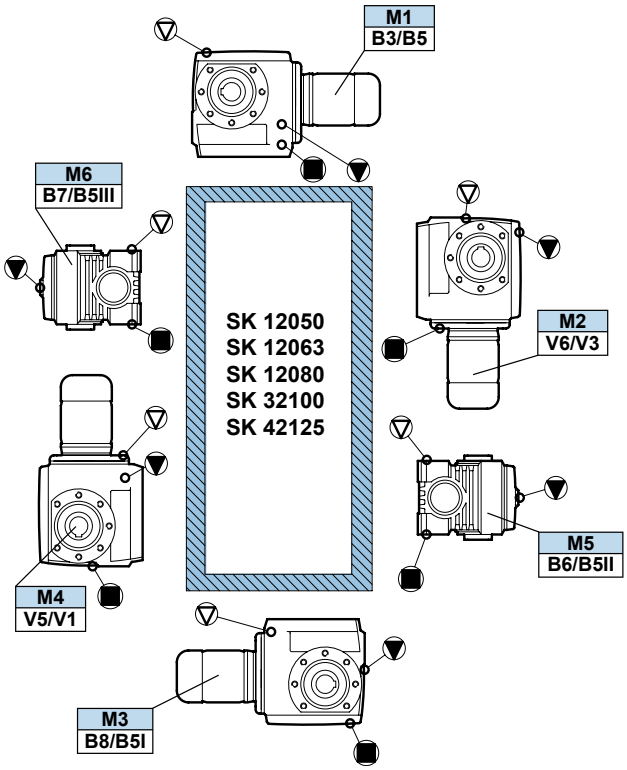

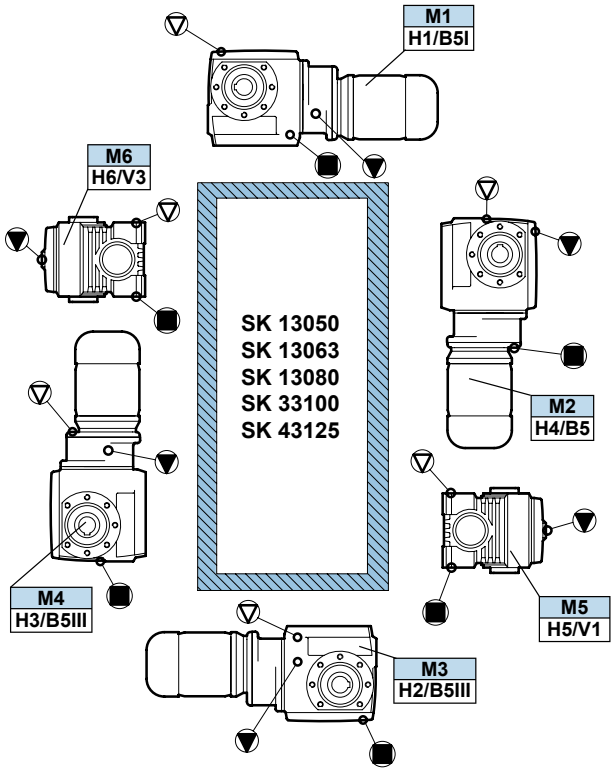

▽ = Vent ▼ = Oil Level ■ = Oil Drain

SERVICE

Send Quote Requests to info@automatedpt.com
Call +1(800)985-6929 To Order or Order Online At Nordgearmotors.com

Send Quote Requests to info@automatedpt.com
Call +1(800)985-6929 To Order or Order Online At Nordgearmotors.com

Parts Lists

DRIVESYSTEMS

In-line SK11E - SK51E Foot Mount

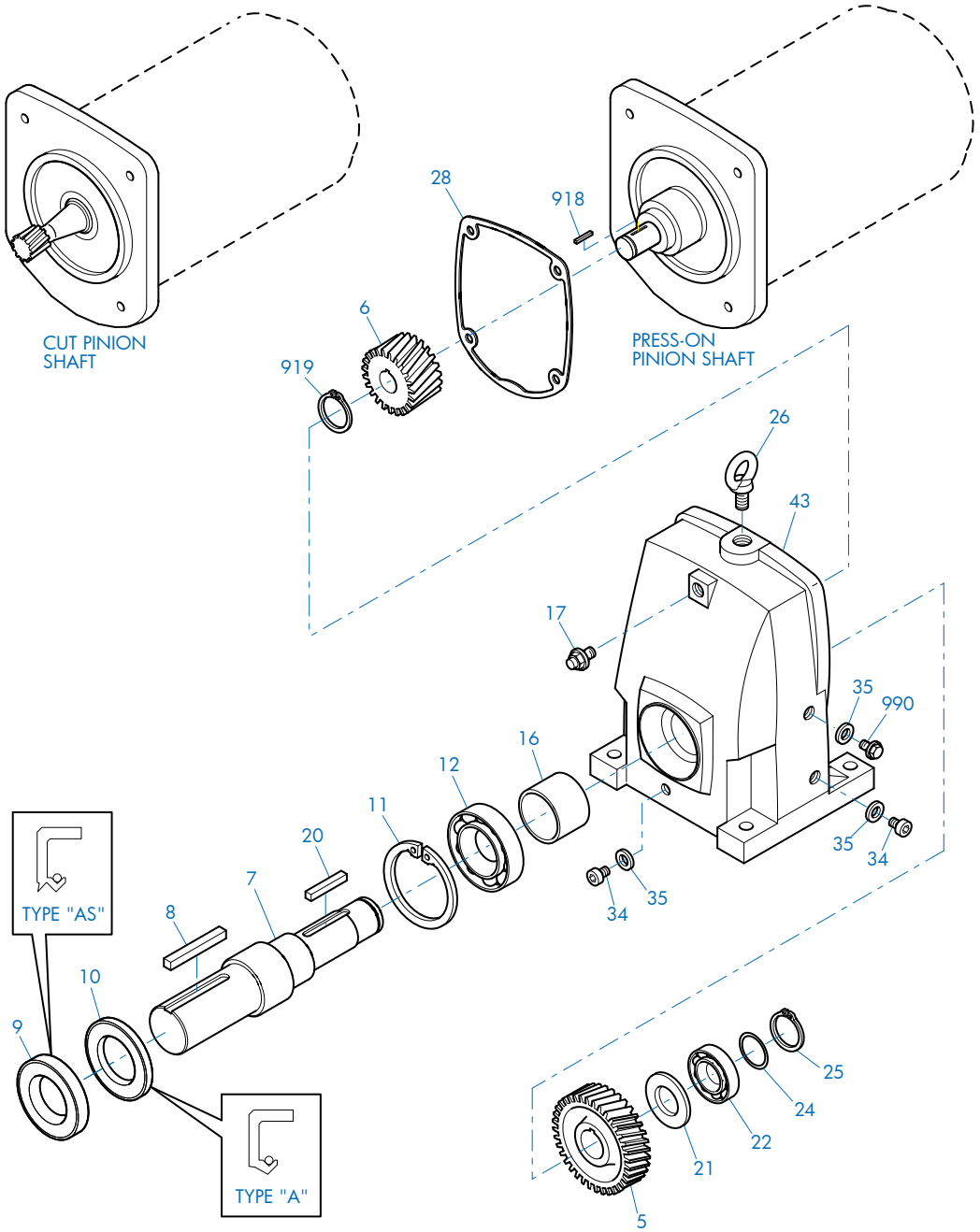

5	Gear	16	Spacer	26	Flanged Eye Bolt
6	Pinion	17	Vent Plug	28	Gasket
7	Output Shaft	18	Seal	34	Drain Plug
8	Key	20	Key	35	Gasket
9	Oil Seal	21	Spacer	43	Gearcase
10	Oil Seal	22	Anti-Friction Bearing	918	Key
11	Snap Ring	24	Shim	919	Snap Ring
12	Anti-Friction Bearing	25	Snap Ring	990	Oil Level Plug

SERVICE

Send Quote Requests to info@automatedpt.com
Call +1(800)985-6929 To Order or Order Online At Nordgearmotors.com

Send Quote Requests to info@automatedpt.com
Call +1(800)985-6929 To Order or Order Online At Nordgearmotors.com

In-line SK02 - SK52 Foot Mount

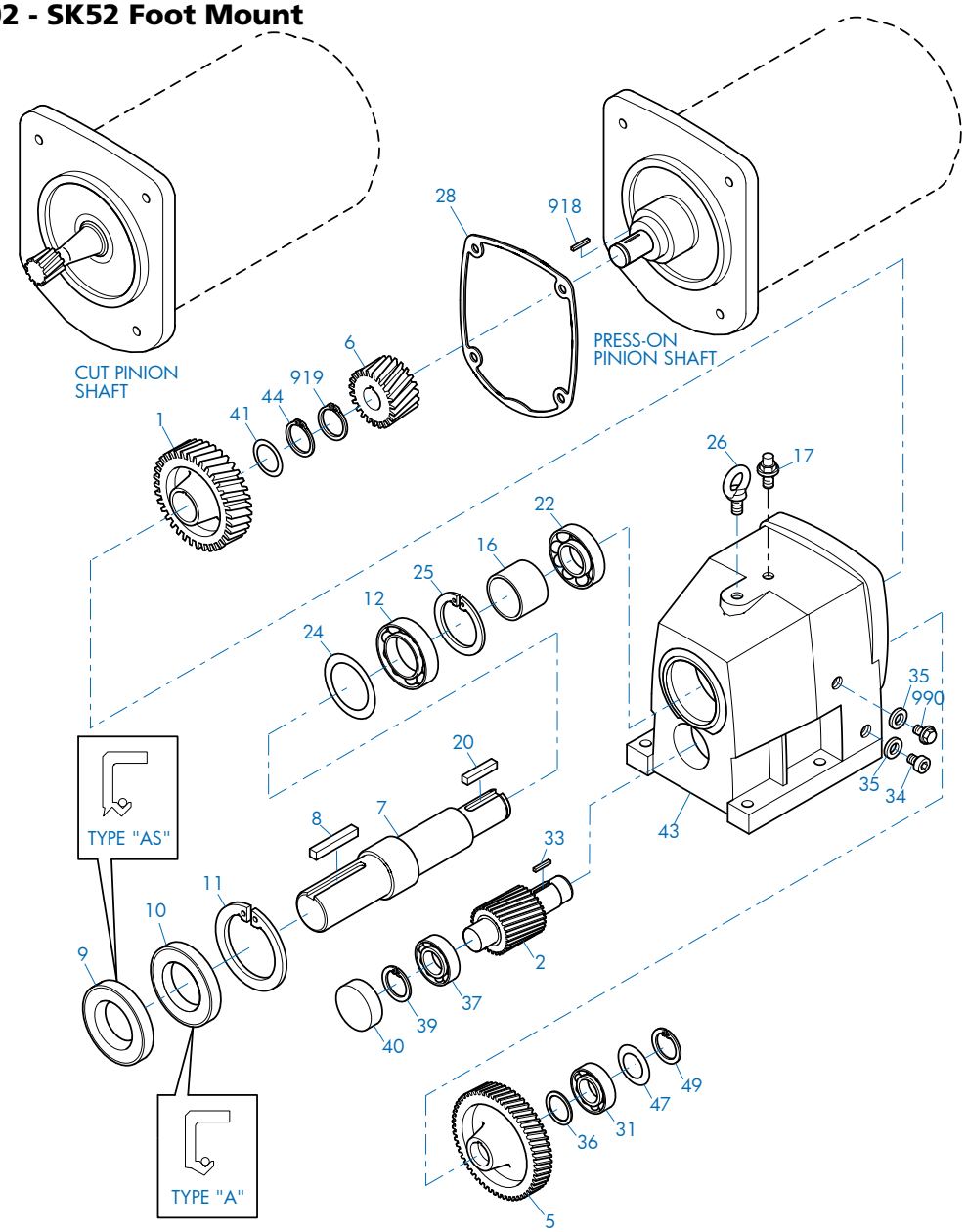

1	Gear	18	Seal	37	Anti-Friction Bearing
2	Pinion Shaft	20	Key	39	Snap Ring
5	Gear	22	Anti-Friction Bearing	40	Bore Plug
6	Pinion	23	Thrust Washer	41	Shim
7	Output Shaft	24	Shim	43	Gearcase
8	Key	25	Snap Ring	44	Snap Ring
9	Oil Seal	26	Flanged Eye Bolt	47	Shim
10	Oil Seal	28	Gasket	49	Snap Ring
11	Snap Ring	31	Anti-Friction Bearing	130	Shim
12	Anti-Friction Bearing	33	Key	918	Key
13	NILOS Ring*	34	Drain Plug	919	Snap Ring
16	Spacer	35	Gasket	990	Oil Level Plug
17	Vent Plug	36	Spacer		

* Conditionally used part

SERVICE

Send Quote Requests to info@automatedpt.com
Call +1(800)985-6929 To Order or Order Online At Nordgearmotors.com

Send Quote Requests to info@automatedpt.com
Call +1(800)985-6929 To Order or Order Online At Nordgearmotors.com

In-line SK62 - SK102 Foot Mount

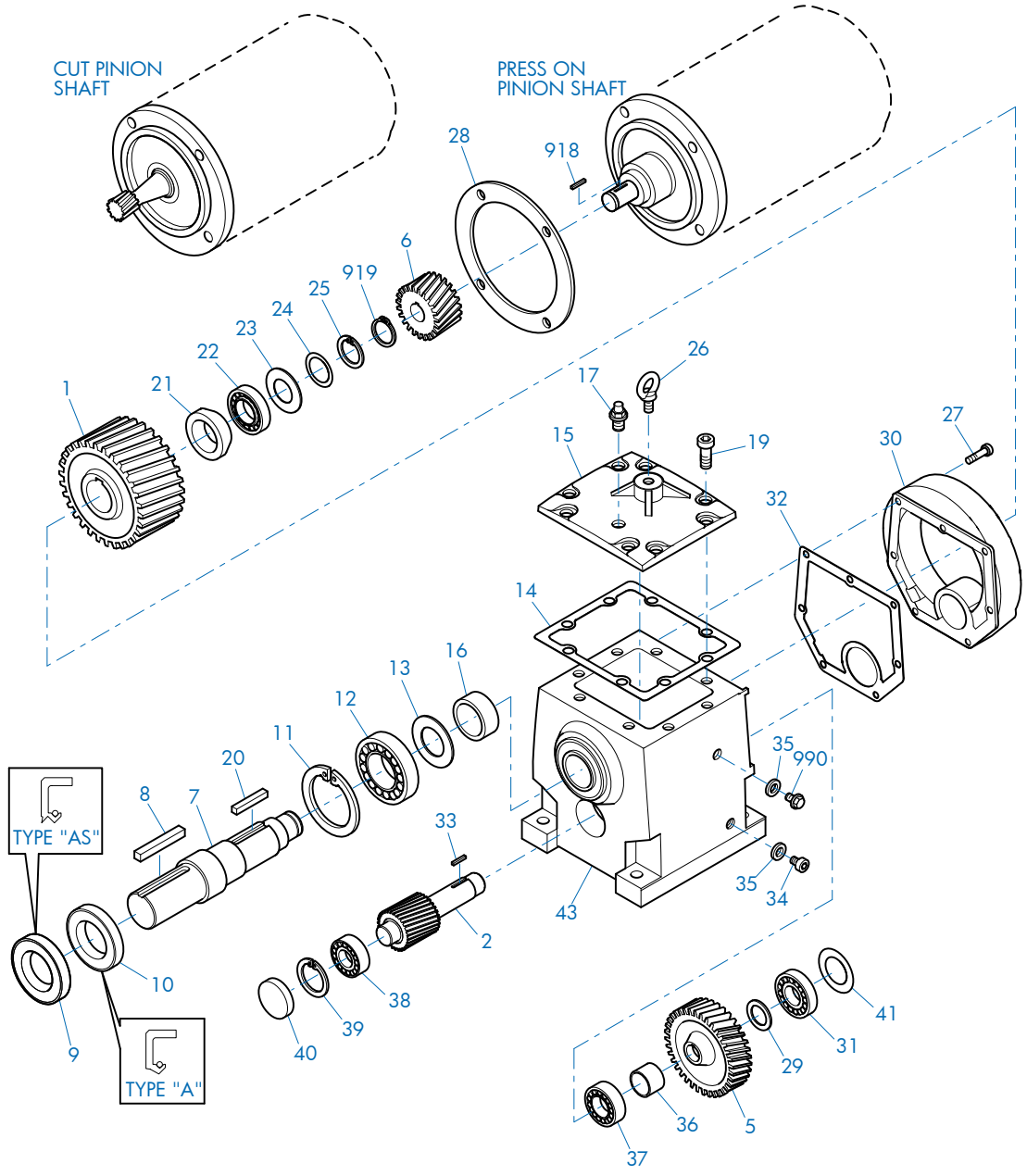

1	Gear	15	Inspection Cover	27	Bolt	39	Snap Ring
2	Pinion Shaft	16	Spacer	28	Gasket	40	Bore Plug
5	Gear	17	Vent Plug	29	Spacer	41	Shim
6	Pinion	18	Seal	30	Input Cover	42	Thrust Washer
7	Output Shaft	19	Bolt	31	Anti-Friction Bearing	43	Gearcase
8	Key	20	Key	32	Gasket	131	NILOS Ring
9	Oil Seal	21	Spacer	33	Key	132	NILOS Ring
10	Oil Seal	22	Anti-Friction Bearing	34	Drain Plug	918	Key
11	Snap Ring	23	Thrust Washer	35	Gasket	919	Snap Ring
12	Anti-Friction Bearing	24	Shim	36	Spacer	990	Oil Level Plug
13	NILOS ring	25	Snap Ring	37	Anti-Friction Bearing		
14	Gasket	26	Flanged Eye Bolt	38	Anti-Friction Bearing		

SERVICE

Send Quote Requests to info@automatedpt.com
Call +1(800)985-6929 To Order or Order Online At Nordgearmotors.com

Send Quote Requests to info@automatedpt.com
Call +1(800)985-6929 To Order or Order Online At Nordgearmotors.com

In-line SK63 - SK103 Foot Mount

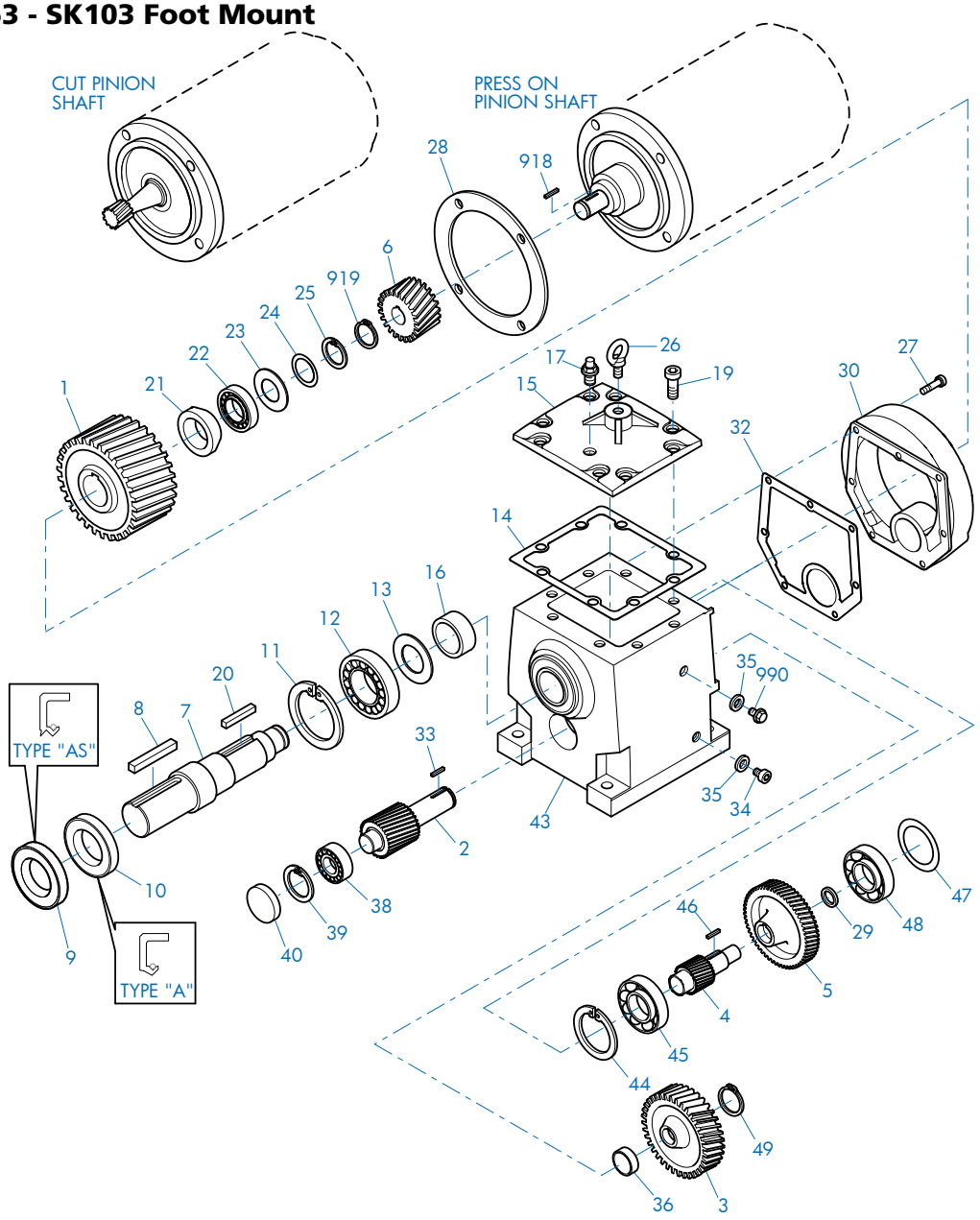

1	Gear	15	Inspection Cover	29	Spacer	45	Anti-Friction Bearing
2	Pinion Shaft	16	Spacer	30	Input Cover	46	Key
3	Gear	17	Vent Plug	32	Gasket	47	Shim
4	Pinion Shaft	18	Seal	33	Key	48	Bearing
5	Gear	19	Bolt	34	Drain plug	49	Snap Ring
6	Pinion	20	Key	35	Gasket	50	Thrust Washer
7	Output Shaft	21	Spacer	36	Spacer	51	Snap Ring
8	Key	22	Anti-Friction Bearing	37	Anti-Friction Bearing	131	NILOS Ring
9	Oil Seal	23	Thrust Washer	38	Anti-Friction Bearing	133	NILOS Ring
10	Oil Seal	24	Shim	39	Snap Ring	918	Key
11	Snap Ring	25	Snap Ring	40	Bore Plug	919	Snap Ring
12	Anti-Friction Bearing	26	Flanged Eye Bolt	41	Shim	990	Oil Level Plug
13	NILOS Ring	27	Bolt	43	Gearcase		
14	Gasket	28	Gasket	44	Snap Ring		

SERVICE

Send Quote Requests to info@automatedpt.com
Call +1(800)985-6929 To Order or Order Online At Nordgearmotors.com

Send Quote Requests to info@automatedpt.com
Call +1(800)985-6929 To Order or Order Online At Nordgearmotors.com

Parts Lists

DRIVESYSTEMS

Clincher™ SK0182NB + SK1282 - SK5282 AZB + VZ

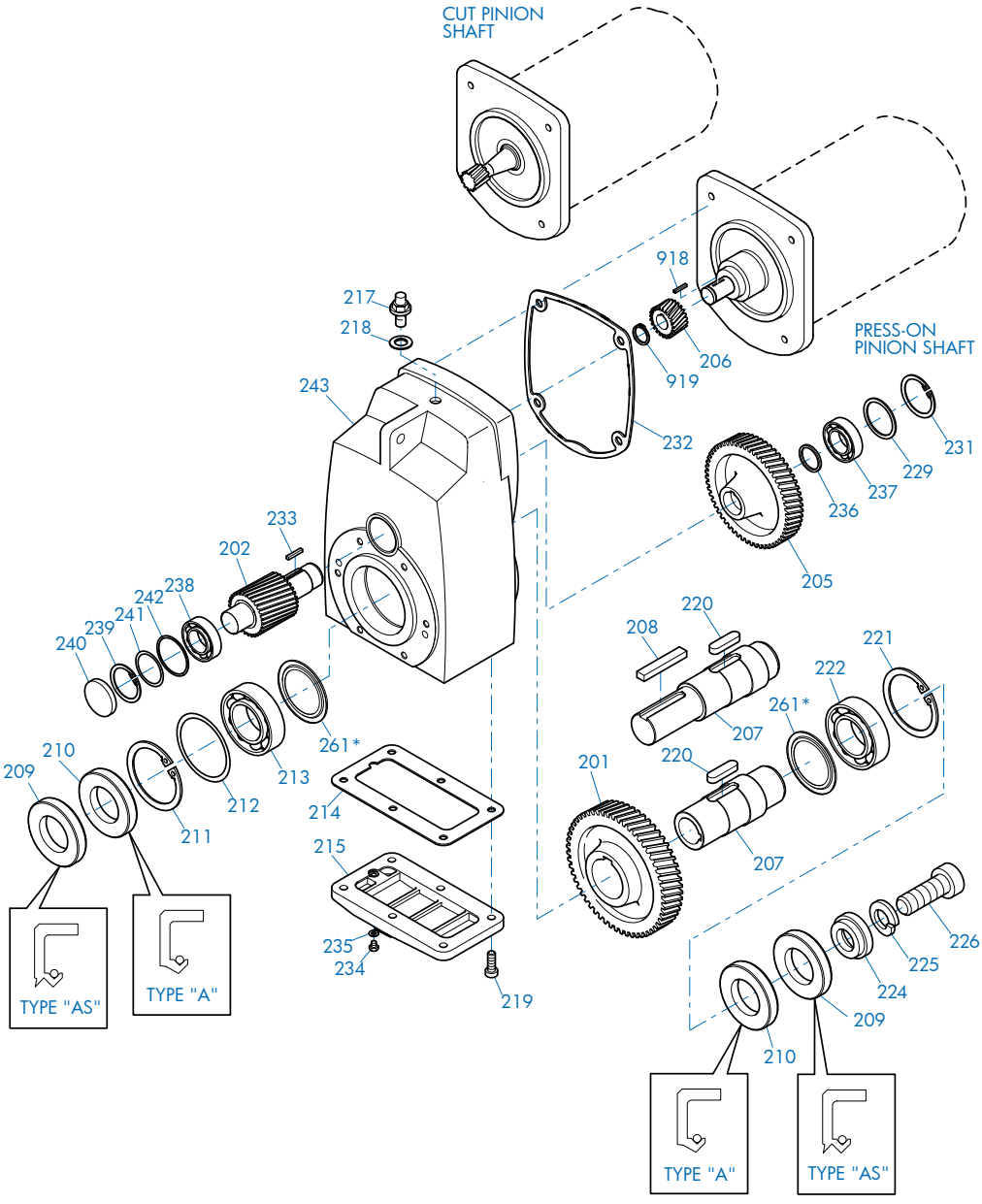

201	Gear	213	Anti-Friction Bearing	225	Lock Washer	238	Anti-Friction Bearing
202	Pinion Shaft	214	Gasket	226	Bolt	239	Snap Ring
205	Gear	215	Inspection Cover	229	Thrust Washer	240	Bore Plug
206	Pinion	217	Vent Plug	231	Snap Ring	241	Shim
207	Output Shaft	218	Gasket	232	Gasket	242	Thrust Washer
208	Key	219	Bolt	233	Key	243	Gearcase
209	Oil Seal	220	Key	234	Drain Plug	261	Nilos Ring*
210	Oil Seal	221	Snap Ring	235	Gasket	918	Key
211	Snap Ring	222	Anti-Friction Bearing	236	Thrust Washer	919	Snap Ring
212	Shim	224	Retaining Washer	237	Anti-Friction Bearing		

* Conditionally used part

SERVICE

Send Quote Requests to info@automatedpt.com
Call +1(800)985-6929 To Order or Order Online At Nordgearmotors.com

Send Quote Requests to info@automatedpt.com
Call +1(800)985-6929 To Order or Order Online At Nordgearmotors.com

Clincher™ SK0282NB + SK6282 - SK11282 AZB + VZ

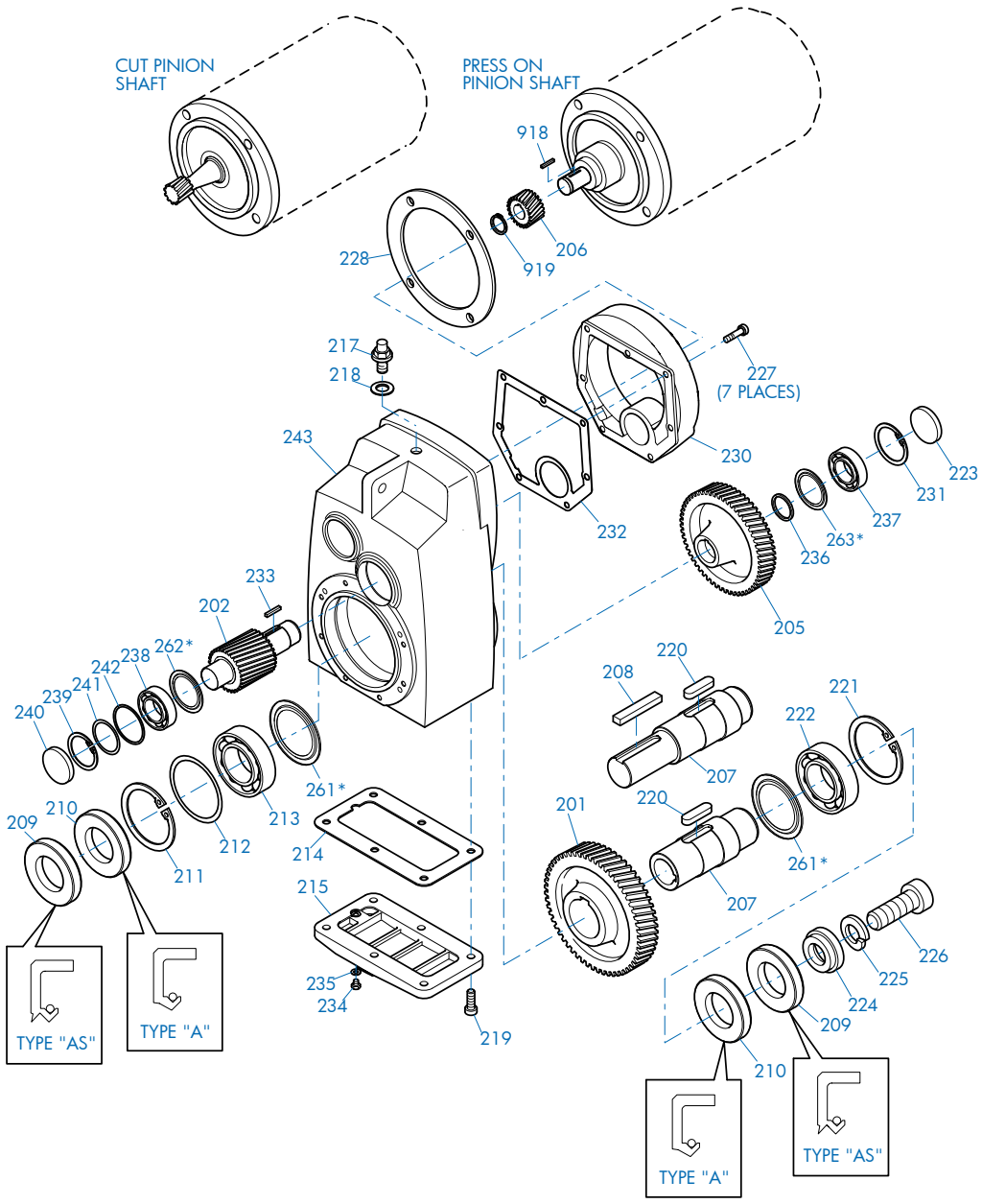

201	Gear	214	Gasket	227	Bolt	239	Snap Ring
202	Pinion Shaft	215	Inspection Cover	228	Gasket	240	Bore Plug
205	Gear	217	Vent Plug	230	Input Cover	241	Shim
206	Pinion	218	Gasket	231	Snap Ring	242	Thrust Washer
207	Output Shaft	219	Bolt	232	Gasket	243	Gear case
208	Key	220	Key	233	Key	261	Nilos Ring*
209	Oil Seal	221	Snap Ring	234	Drain Plug	262	Nilos Ring*
210	Oil Seal	222	Anti-Friction Bearing	235	Gasket	263	Nilos Ring*
211	Snap Ring	224	Retaining Washer	236	Thrust Washer	918	Key
212	Shim	225	Lock Washer	237	Anti-Friction Bearing	919	Snap Ring
213	Anti-Friction Bearing	226	Bolt	238	Anti-Friction Bearing		

* Conditionally used part

SERVICE

Send Quote Requests to info@automatedpt.com
Call +1(800)985-6929 To Order or Order Online At Nordgearmotors.com

Send Quote Requests to info@automatedpt.com Call +1(800)985-6929 To Order or Order Online At Nordgearmotors.com

Parts Lists

DRIVESYSTEMS

Clincher™ SK1382NB + SK6382 - SK12382 AZB + VZ

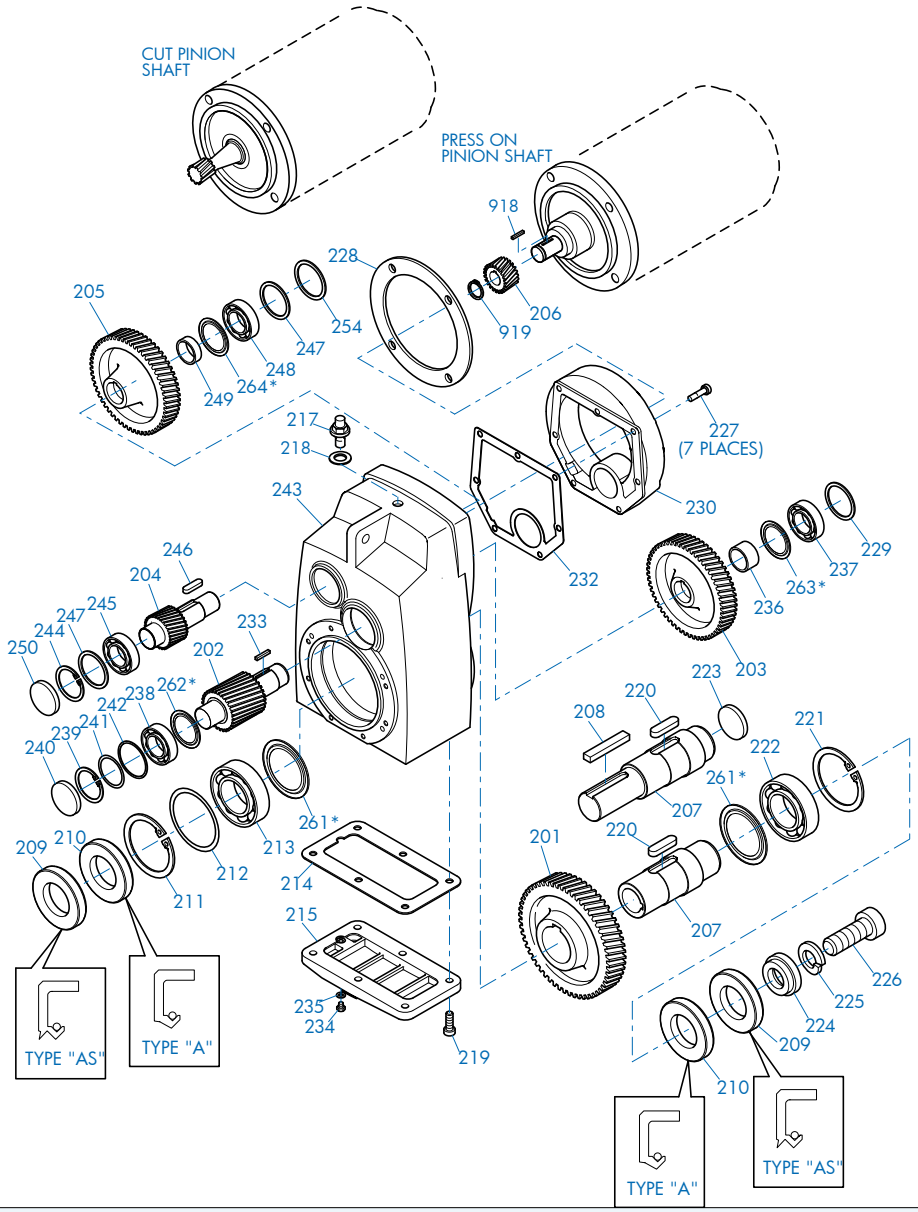

2201	Gear	215	Inspection Cover	230	Input Cover	245	Anti-Friction Bearing
202	Pinion Shaft	217	Vent Plug	232	Gasket	246	Key
203	Gear	218	Gasket	233	Key	247	Shim
204	Pinion Shaft	219	Bolt	234	Drain Plug	248	Anti-Friction Bearing
205	Gear	220	Key	235	Gasket	249	Spacer
206	Pinion	221	Snap Ring	236	Thrust Washer	250	Bore Plug
207	Output Shaft	222	Anti-Friction Bearing	237	Anti-Friction Bearing	254	Thrust Washer
208	Key	223	Bore Plug	238	Anti-Friction Bearing	261	Nilos Ring*
209	Oil Seal	224	Retaining Washer	239	Snap Ring	262	Nilos Ring*
210	Oil Seal	225	Lock Washer	240	Bore Plug	263	Nilos Ring*
211	Snap Ring	226	Bolt	241	Shim	264	Nilos Ring*
212	Shim	227	Bolt	242	Thrust Washer	918	Key
213	Anti-Friction Bearing	228	Gasket	243	Gearcase	919	Snap Ring
214	Gasket	229	Thrust Washer	244	Snap Ring		

* Conditionally used part

SERVICE

Send Quote Requests to info@automatedpt.com
Call +1(800)985-6929 To Order or Order Online At Nordgearmotors.com

Send Quote Requests to info@automatedpt.com Call +1(800)985-6929 To Order or Order Online At Nordgearmotors.com

Clincher™ SK0282NB + SK11282 VF + G

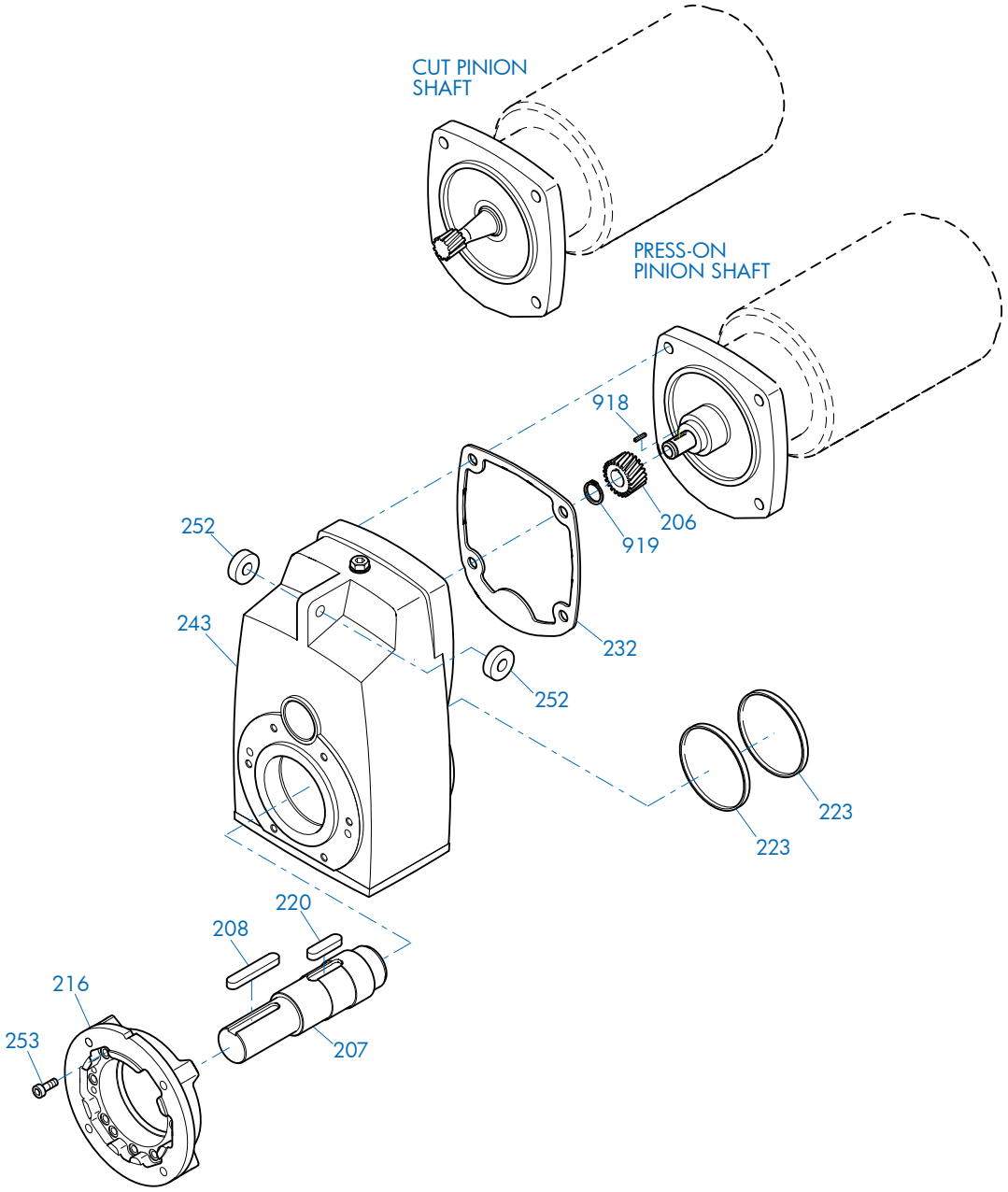

206 Pinion	220 Key	252 Rubber Buffer
207 Output Shaft	223 Bore Plug	253 Bolt
208 Key	232 Gasket	918 Key
216 Flange	243 Gearcase	919 Snap Ring

SERVICE

Send Quote Requests to info@automatedpt.com
Call +1(800)985-6929 To Order or Order Online At Nordgearmotors.com

Send Quote Requests to info@automatedpt.com
Call +1(800)985-6929 To Order or Order Online At Nordgearmotors.com

Parts Lists

Helical-bevel SK92072

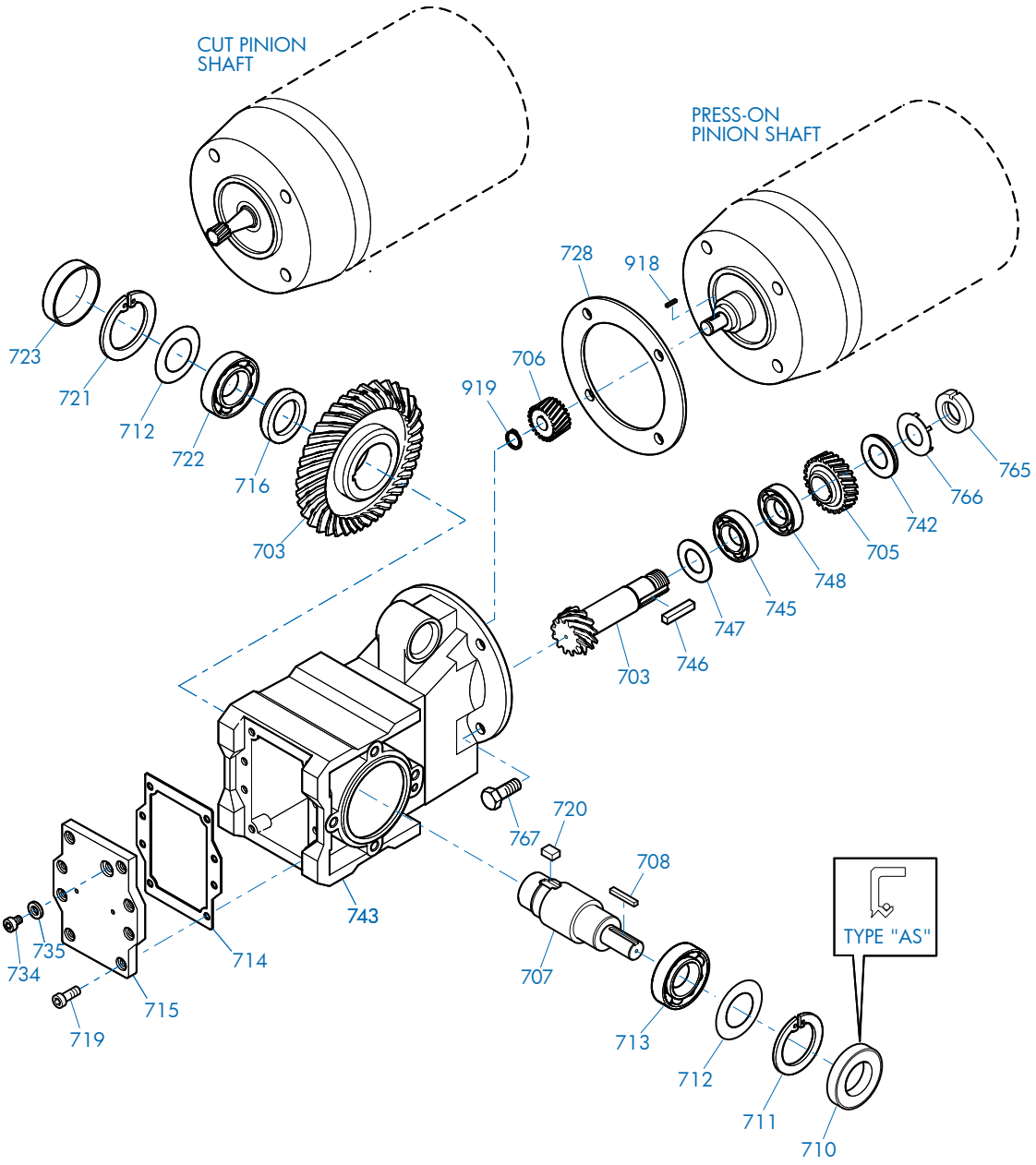

703	Bevel Gearset	716	Spacer	745	Anti-Friction Bearing
705	Gear	719	Bolt	746	Key
706	Pinion	720	Key	747	Shim
707	Output Shaft	721	Snap Ring	748	Anti-Friction Bearing
708	Key	722	Anti-Friction Bearing	765	Slotted Nut
710	Oil Seal	723	Bore Plug	766	Tab Lock Washer
711	Snap Ring	728	Gasket	767	Bolt
712	Shim	734	Oil Plug	918	Key
713	Anti-Friction Bearing	735	Gasket	919	Snap Ring
714	Gasket	742	Thrust Washer		
715	Inspection Cover	743	Gear case		

SERVICE

Send Quote Requests to info@automatedpt.com
Call +1(800)985-6929 To Order or Order Online At Nordgearmotors.com

Send Quote Requests to info@automatedpt.com
Call +1(800)985-6929 To Order or Order Online At Nordgearmotors.com

Helical-bevel SK92072AZSH + B + F

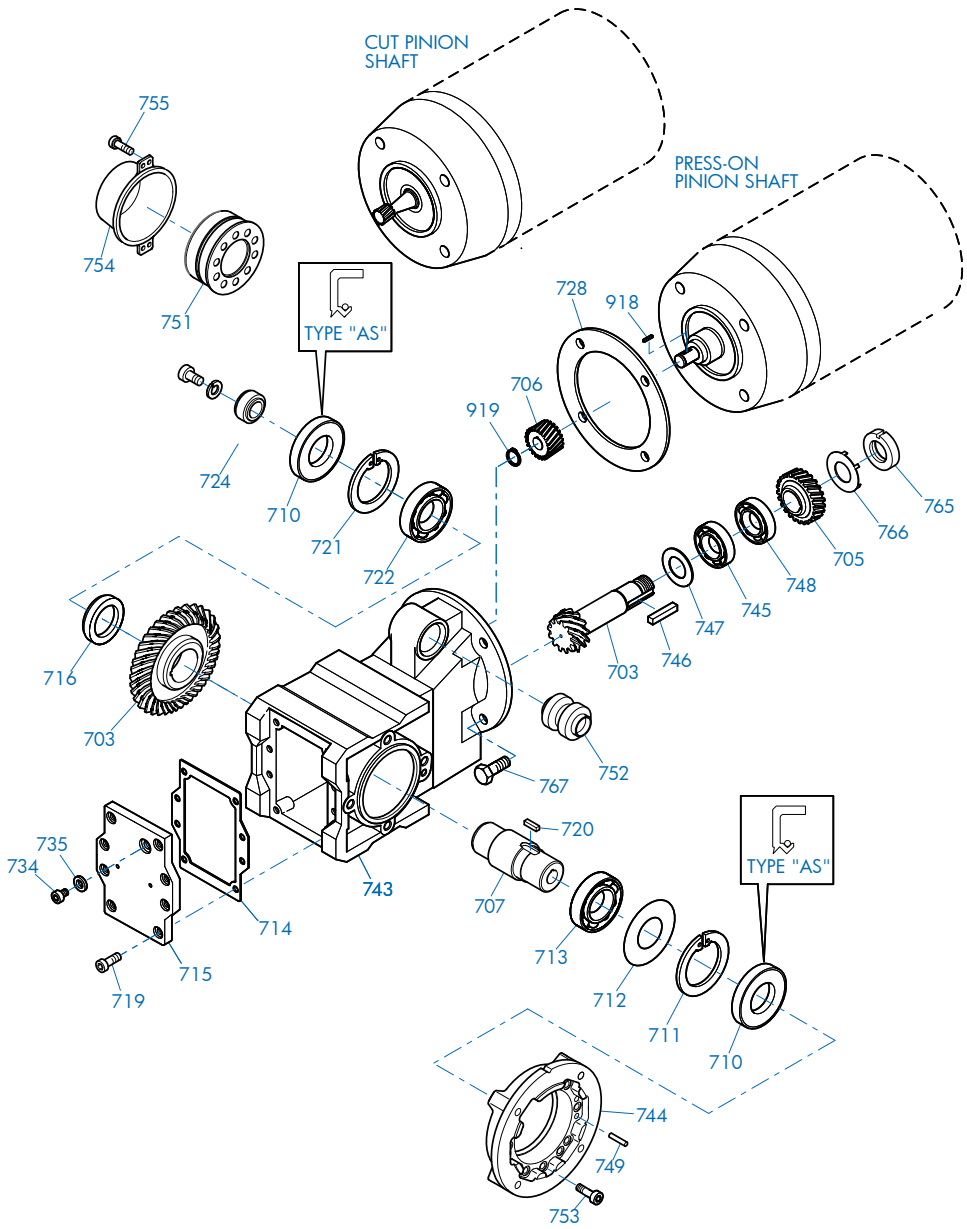

703	Bevel Gearset	720	Key	748	Anti-Friction Bearing
705	Gear	721	Snap Ring	749	Grooved Pin
706	Pinion	722	Anti-Friction Bearing	751	Shrink Disc
707	Output Shaft	724	Fixing Element Kit	752	Rubber Buffer
710	Oil Seal	728	Gasket	753	Bolt
711	Snap Ring	734	Oil Plug	754	Cover
712	Shim	735	Gasket	755	Bolt
713	Anti-Friction Bearing	743	Gearcase	765	Slotted Round Nut
714	Gasket	744	Flange	766	Tab Lock Washer
715	Inspection Cover	745	Anti-Friction Bearing	767	Bolt
716	Spacer	746	Key	918	Key
719	Bolt	747	Shim	919	Snap Ring

SERVICE

Send Quote Requests to info@automatedpt.com
Call +1(800)985-6929 To Order or Order Online At Nordgearmotors.com

Send Quote Requests to info@automatedpt.com
Call +1(800)985-6929 To Order or Order Online At Nordgearmotors.com

Parts Lists

Helical-bevel SK92172 - SK92772

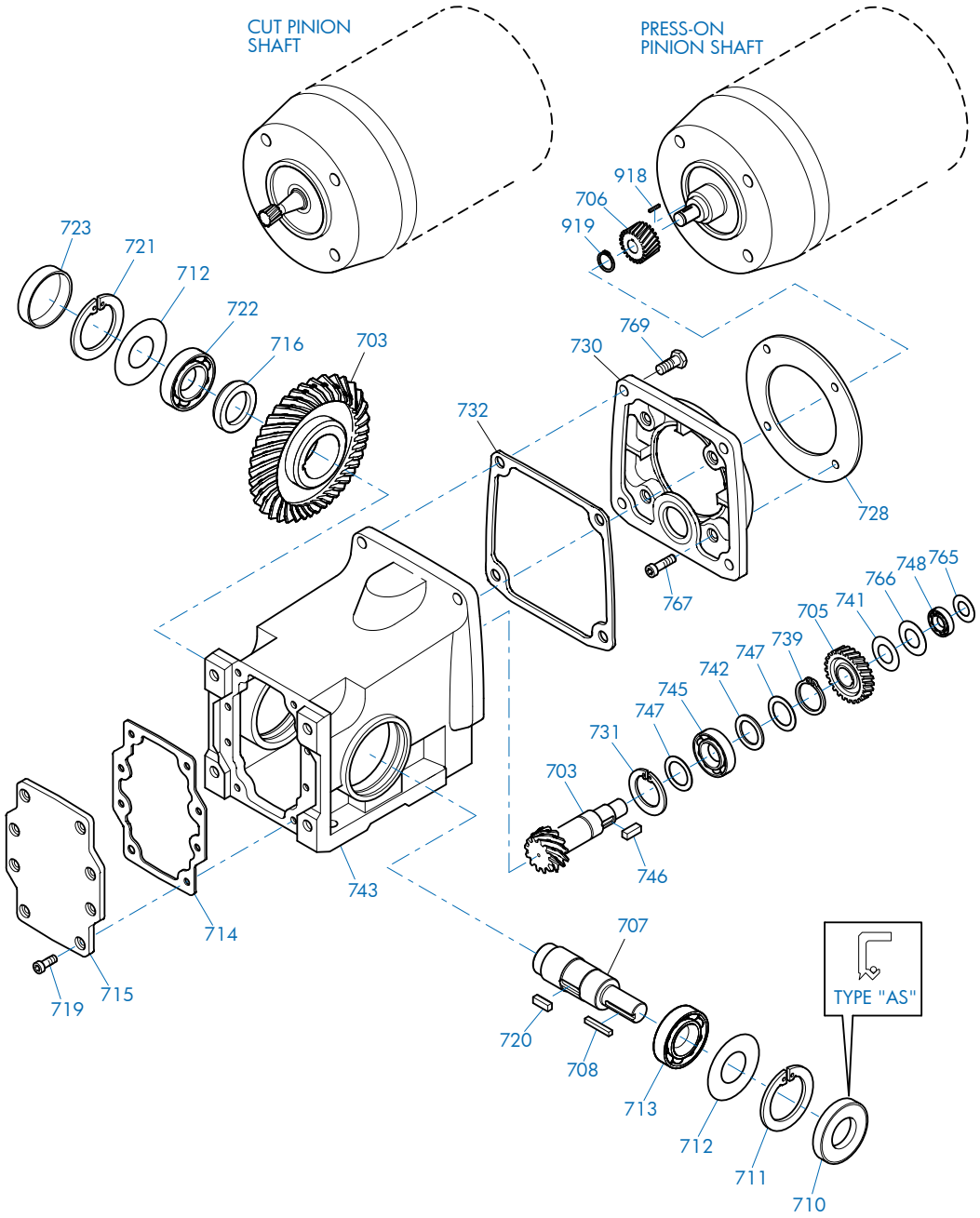

703	Bevel Gearset	714	Gasket	730	Input Cover	747	Shim
705	Gear	715	Inspection Cover	731	Snap Ring	748	Anti-Friction Bearing
706	Pinion	716	Spacer	732	Gasket	765	Shim
707	Output Shaft	719	Bolt	739	Snap Ring	766	Snap Ring
708	Key	720	Key	741	Shim	767	Bolt
710	Oil Seal	721	Snap Ring	742	Thrust Washer	769	Bolt
711	Snap Ring	722	Anti-Friction Bearing	743	Gearcase	918	Key
712	Shim	723	Bore Plug	745	Anti-Friction Bearing	919	Snap Ring
713	Anti-Friction Bearing	728	Gasket	746	Key		

SERVICE

Send Quote Requests to info@automatedpt.com
Call +1(800)985-6929 To Order or Order Online At Nordgearmotors.com

Send Quote Requests to info@automatedpt.com
Call +1(800)985-6929 To Order or Order Online At Nordgearmotors.com

Helical-bevel SK92172 - SK92772VF + D

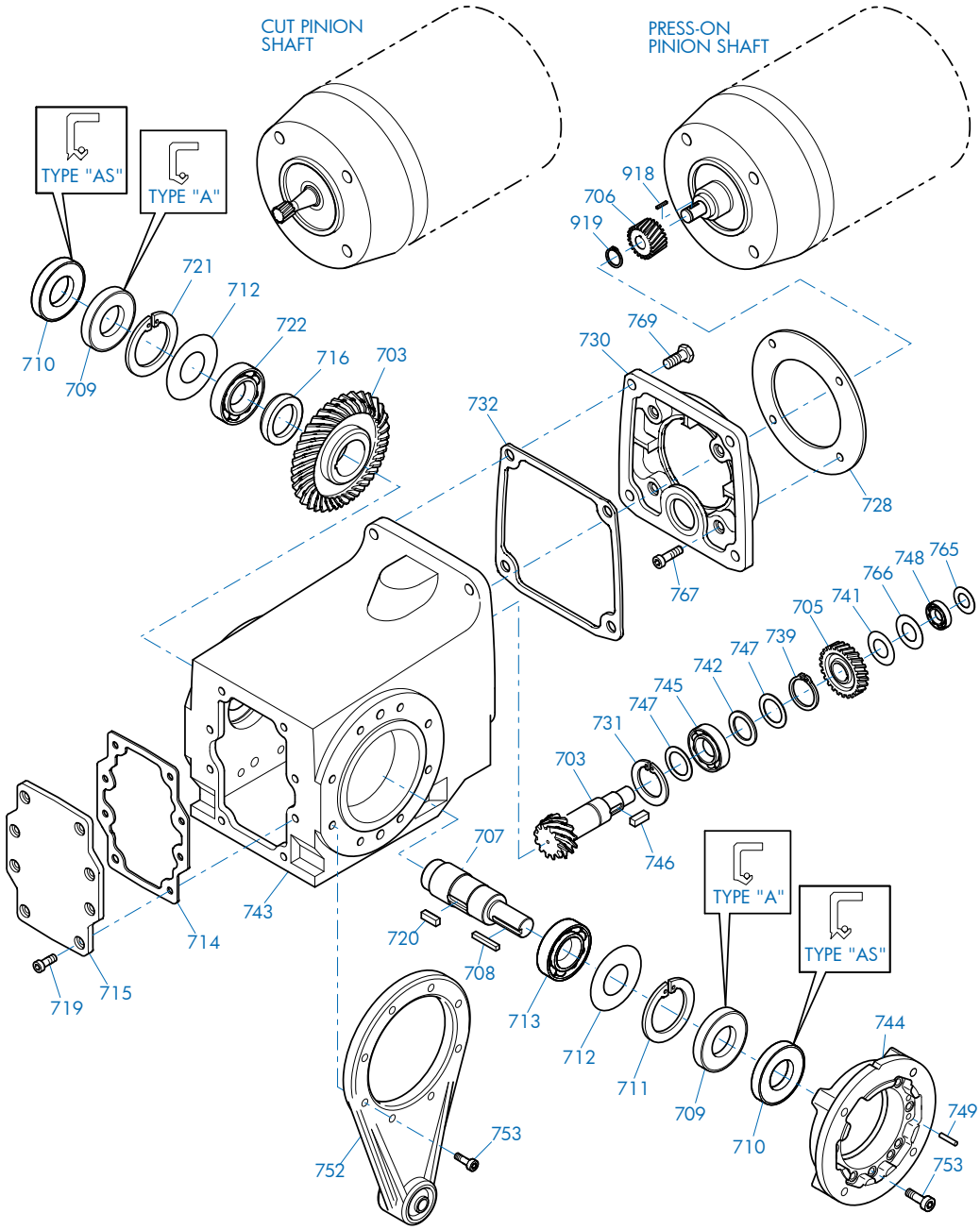

703	Bevel Gearset	714	Gasket	732	Gasket	749	Grooved Pin
705	Gear	715	Inspection Cover	739	Snap Ring	753	Bolt
706	Pinion	716	Spacer	741	Shim	765	Shim
707	Output Shaft	719	Bolt	742	Thrust Washer	766	Snap Ring
708	Key	720	Key	743	Gearcase	767	Bolt
709	Oil Seal	721	Snap Ring	744	Flange	769	Bolt
710	Oil Seal	722	Anti-Friction Bearing	745	Anti-Friction Bearing	918	Key
711	Snap Ring	728	Gasket	746	Key	919	Snap Ring
712	Shim	730	Input Cover	747	Shim		
713	Anti-Friction Bearing	731	Snap Ring	748	Anti-Friction Bearing		

SERVICE

Send Quote Requests to info@automatedpt.com
Call +1(800)985-6929 To Order or Order Online At Nordgearmotors.com

Send Quote Requests to info@automatedpt.com
Call +1(800)985-6929 To Order or Order Online At Nordgearmotors.com

Parts Lists

DRIVESYSTEMS

Helical-bevel SK92172 - SK92772AZSH + B + F + D

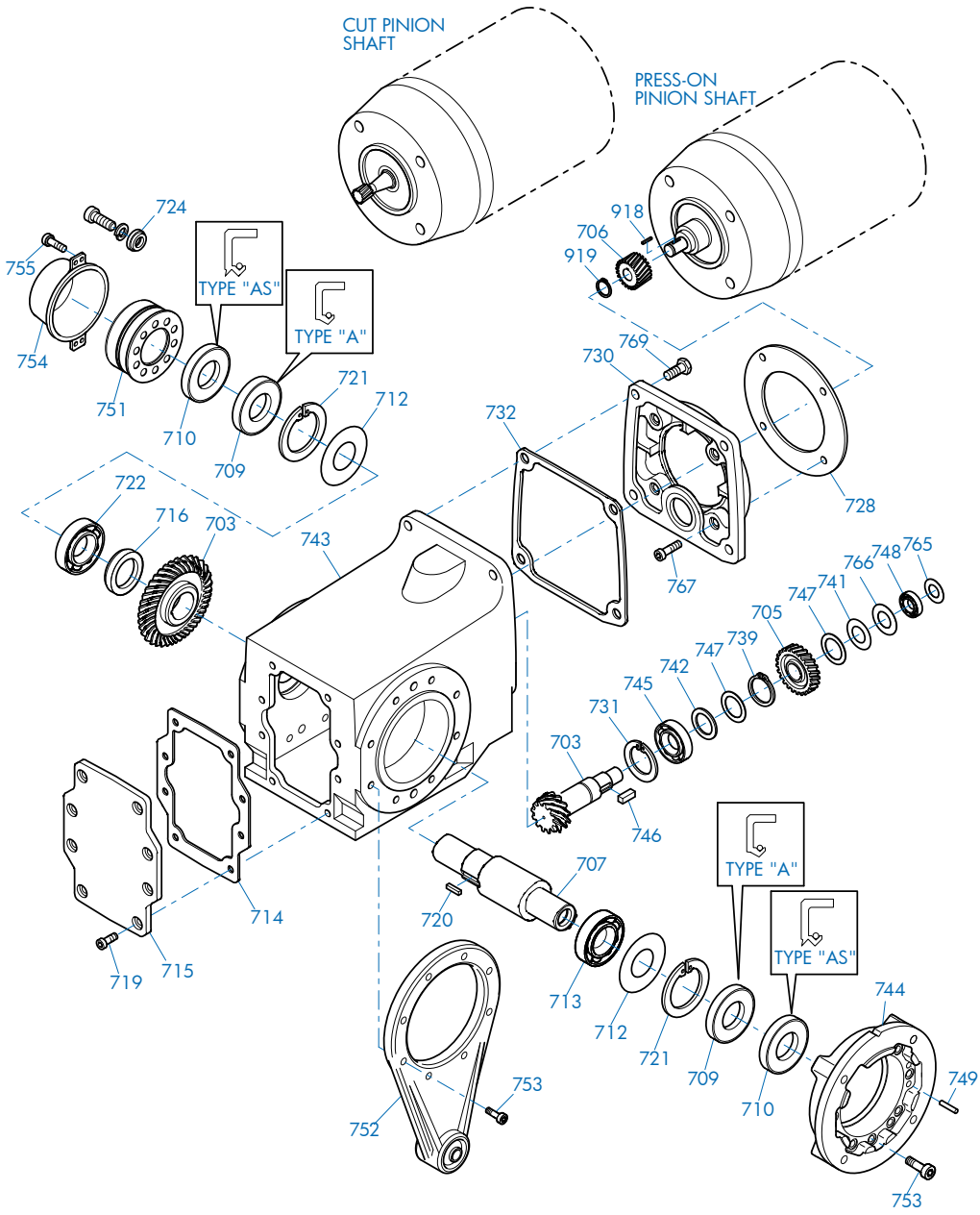

703	Bevel Gearset	719	Bolt	742	Thrust Washer	754	Cover
705	Gear	720	Key	743	Gearcase	755	Bolt
706	Pinion	721	Snap Ring	744	Flange	765	Shim
707	Output Shaft	722	Anti-Friction Bearing	745	Anti-Friction Bearing	766	Snap Ring
709	Oil Seal	724	Fixing Element Kit	746	Key	767	Bolt
710	Oil Seal	728	Gasket	747	Shim	769	Bolt
712	Shim	730	Input Cover	748	Anti-Friction Bearing	918	Key
713	Anti-Friction Bearing	731	Snap Ring	749	Grooved Pin	919	Snap Ring
714	Gasket	732	Gasket	751	Shrink Disc Connector		
715	Inspection Cover	739	Snap Ring	752	Torque Arm		
716	Spacer	741	Shim	753	Bolt		

SERVICE

Send Quote Requests to info@automatedpt.com
Call +1(800)985-6929 To Order or Order Online At Nordgearmotors.com

Send Quote Requests to info@automatedpt.com
Call +1(800)985-6929 To Order or Order Online At Nordgearmotors.com

Helical-bevel SK9012.1 - SK9096.1

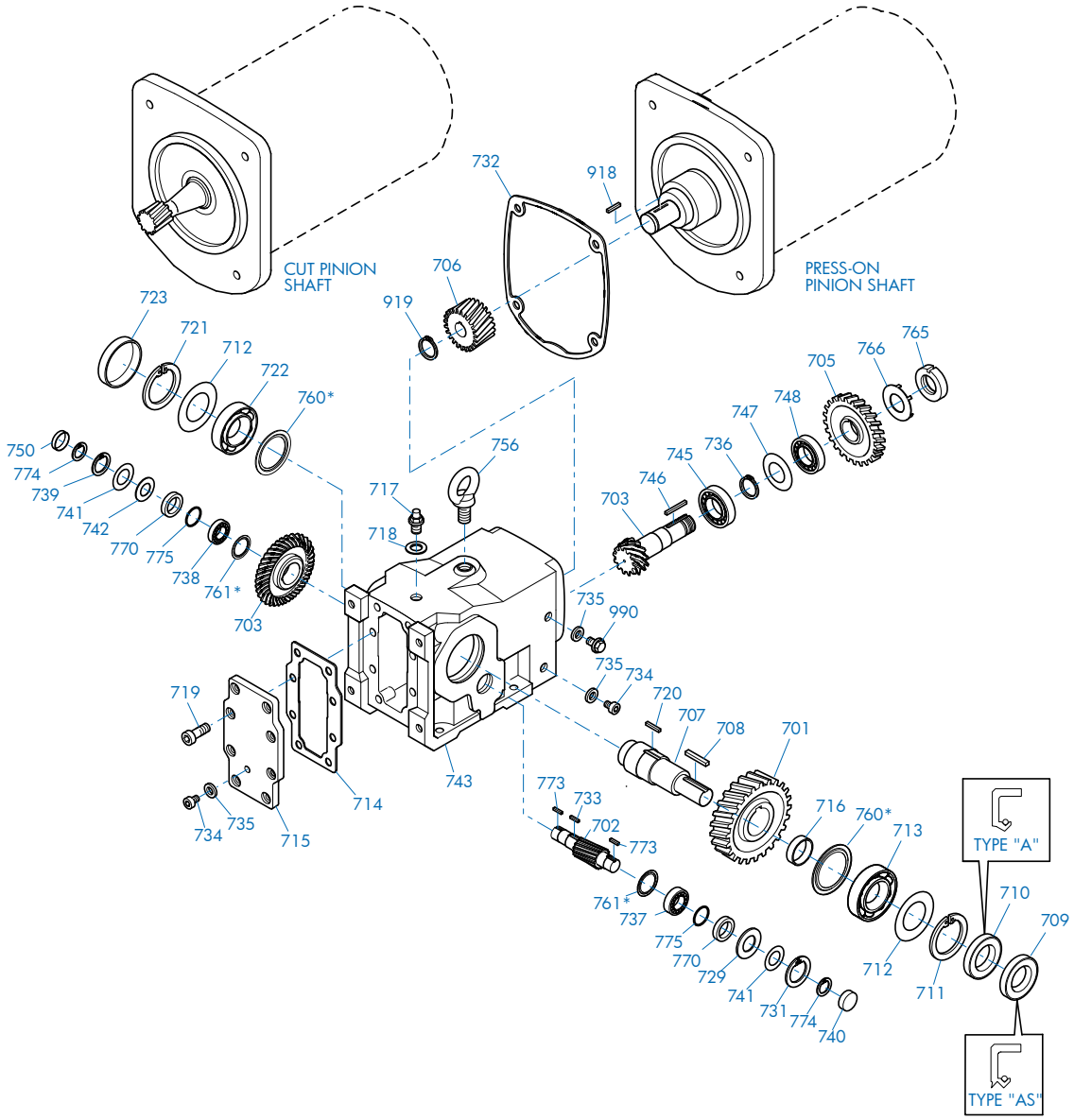

701	Output Gear	716	Spacer	736	Snap Ring	760	Nilos Ring*
702	Pinion Shaft	717	Vent screw	737	Anti-Friction Bearing	761	Nilos Ring*
703	Bevel Gearset	718	Gasket	738	Anti-Friction Bearing	765	Slotted Round Nut
705	Gear	719	Bolt	739	Snap Ring	766	Tab Lock Washer
706	Pinion	720	Key	740	Bore Plug	770	Backstop (If Equipped)
707	Output Shaft	721	Snap Ring	741	Shim	773	Key (w/Backstop)
708	Key	722	Anti-Friction Bearing	742	Thrust Washer	774	Snap Ring (w/Backstop)
709	Oil Seal	723	Bore Plug	743	Gearcase	775	Thrust Washer (w/Backstop)
710	Oil Seal	729	Thrust Washer	745	Anti-Friction Bearing	918	Key
711	Snap Ring	731	Snap Ring	746	Key	919	Snap Ring
712	Shim	732	Gasket	747	Shim	990	Oil Level Plug
713	Anti-Friction Bearing	733	Key	748	Anti-Friction Bearing		
714	Gasket	734	Oil Plug	750	Bore Plug		
715	Inspection Cover	735	Gasket	756	Flanged Eye Bolt		

SERVICE

Send Quote Requests to info@automatedpt.com
Call +1(800)985-6929 To Order or Order Online At Nordgearmotors.com

Send Quote Requests to info@automatedpt.com Call +1(800)985-6929 To Order or Order Online At Nordgearmotors.com

Helical-bevel SK9012.1 - SK9096.1VZ + F

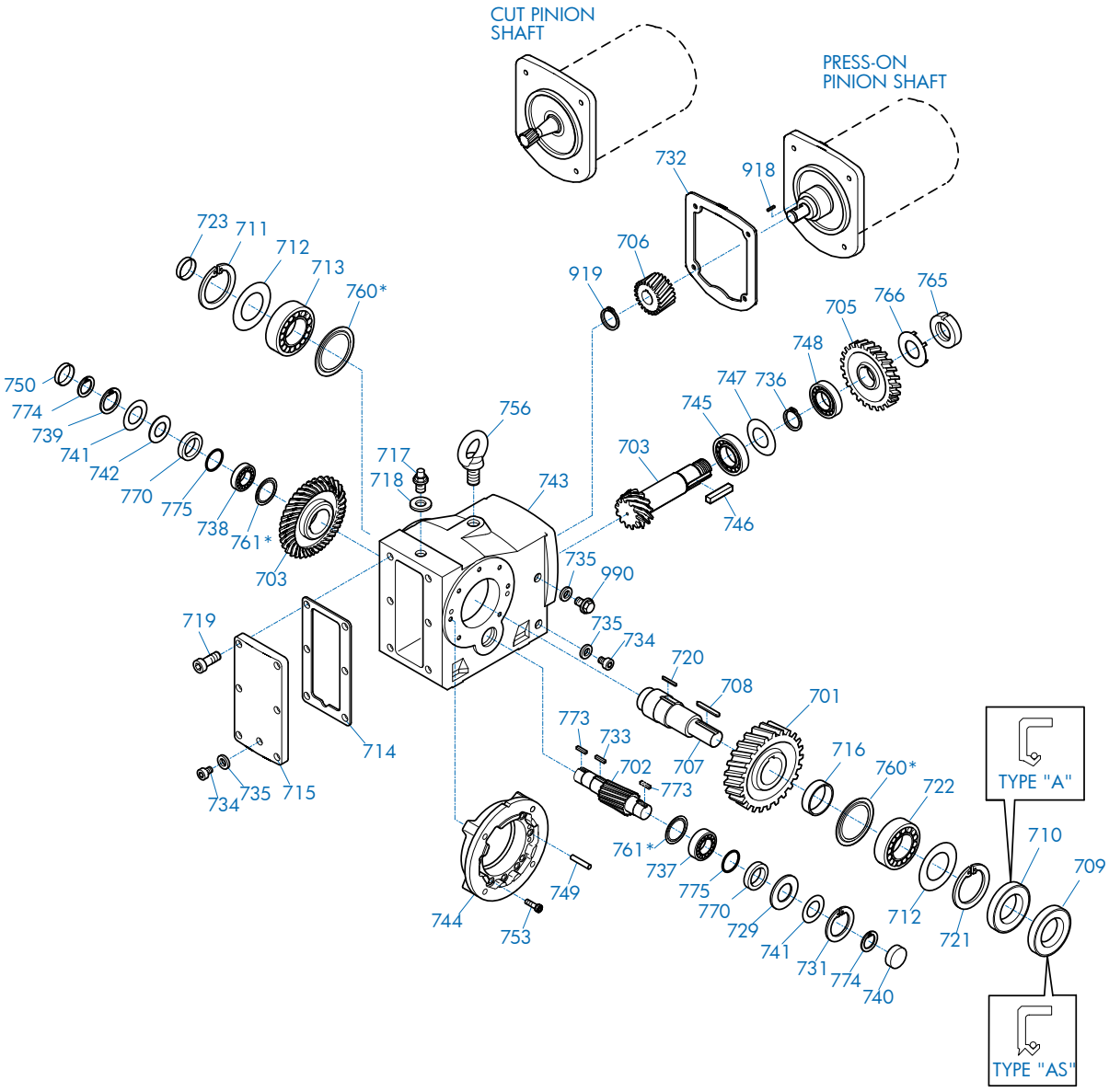

701	Output Gear	717	Vent Plug	738	Anti-Friction Bearing	760	Nilos Ring*
702	Pinion Shaft	718	Gasket	739	Snap Ring	761	Nilos Ring*
703	Bevel Gearset	719	Bolt	740	Bore Plug	765	Slotted Round Nut
705	Gear	720	Key	741	Shim	766	Tab Lock Washer
706	Pinion	721	Snap Ring	742	Thrust Washer	770	Backstop (If Equipped)
707	Output Shaft	722	Anti-Friction Bearing	743	Gearcase	773	Key (w/Backstop)
708	Key	723	Bore Plug	744	Flange	774	Snap Ring (w/Backstop)
709	Oil Seal	729	Thrust Washer	745	Anti-Friction Bearing	775	Thrust Washer (w/Backstop)
710	Oil Seal	731	Snap Ring	746	Key	918	Key
711	Snap Ring	732	Gasket	747	Shim	919	Snap Ring
712	Shim	733	Key	748	Anti-Friction Bearing	990	Oil Level Plug
713	Anti-Friction Bearing	734	Oil plug	749	Dowel Pin		
714	Gasket	735	Gasket	750	Bore Plug		
715	Inspection Cover	736	Snap Ring	753	Bolt		
716	Spacer	737	Anti-Friction Bearing	756	Flanged Eye Bolt		

SERVICE

Send Quote Requests to info@automatedpt.com
Call +1(800)985-6929 To Order or Order Online At Nordgearmotors.com

Send Quote Requests to info@automatedpt.com
Call +1(800)985-6929 To Order or Order Online At Nordgearmotors.com

Helical-bevel SK9012.1 - SK9096.1AZDB

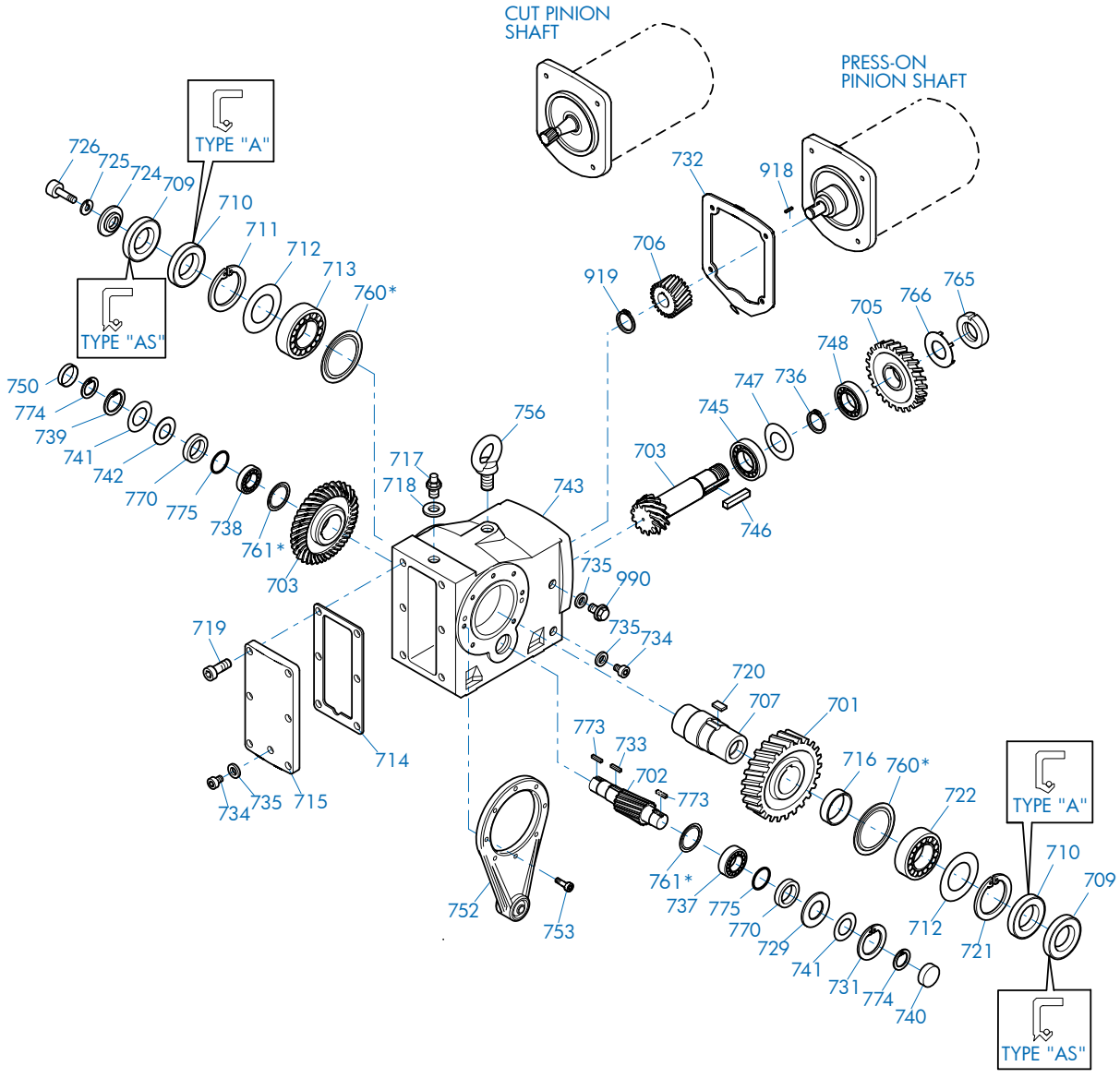

701	Gear	718	Gasket	737	Anti-Friction Bearing	760	Nilos Ring*
702	Pinion Shaft	719	Bolt	738	Anti-Friction Bearing	761	Nilos Ring*
703	Bevel Gearset	720	Key	739	Snap Ring	765	Slotted Round Nut
705	Gear	721	Snap Ring	740	Bore Plug	766	Tab Lock Washer
706	Pinion	722	Anti-Friction Bearing	741	Shim	770	Backstop (If Equipped)
707	Output Shaft	724	Retaining Washer	742	Thrust Washer	773	Key (w/Backstop)
709	Oil Seal	725	Lock Washer	743	Gearcase	774	Snap Ring (w/Backstop)
710	Oil Seal	726	Bolt	745	Anti-Friction Bearing	775	Thrust Washer (w/Backstop)
711	Snap Ring	729	Thrust Washer	746	Key	918	Key
712	Shim	731	Snap Ring	747	Shim	919	Snap Ring
713	Anti-Friction Bearing	732	Gasket	748	Anti-Friction Bearing	990	Oil Level Plug
714	Gasket	733	Key	750	Bore Plug		
715	Inspection Cover	734	Oil plug	752	Torque Arm		
716	Spacer	735	Gasket	753	Bolt		
717	Vent Plug	736	Snap Ring	756	Flanged Eye Bolt		

SERVICE

Send Quote Requests to info@automatedpt.com
Call +1(800)985-6929 To Order or Order Online At Nordgearmotors.com

Send Quote Requests to info@automatedpt.com
Call +1(800)985-6929 To Order or Order Online At Nordgearmotors.com

Parts Lists

DRIVESYSTEMS

Helical-worm SK02040 - SK42125

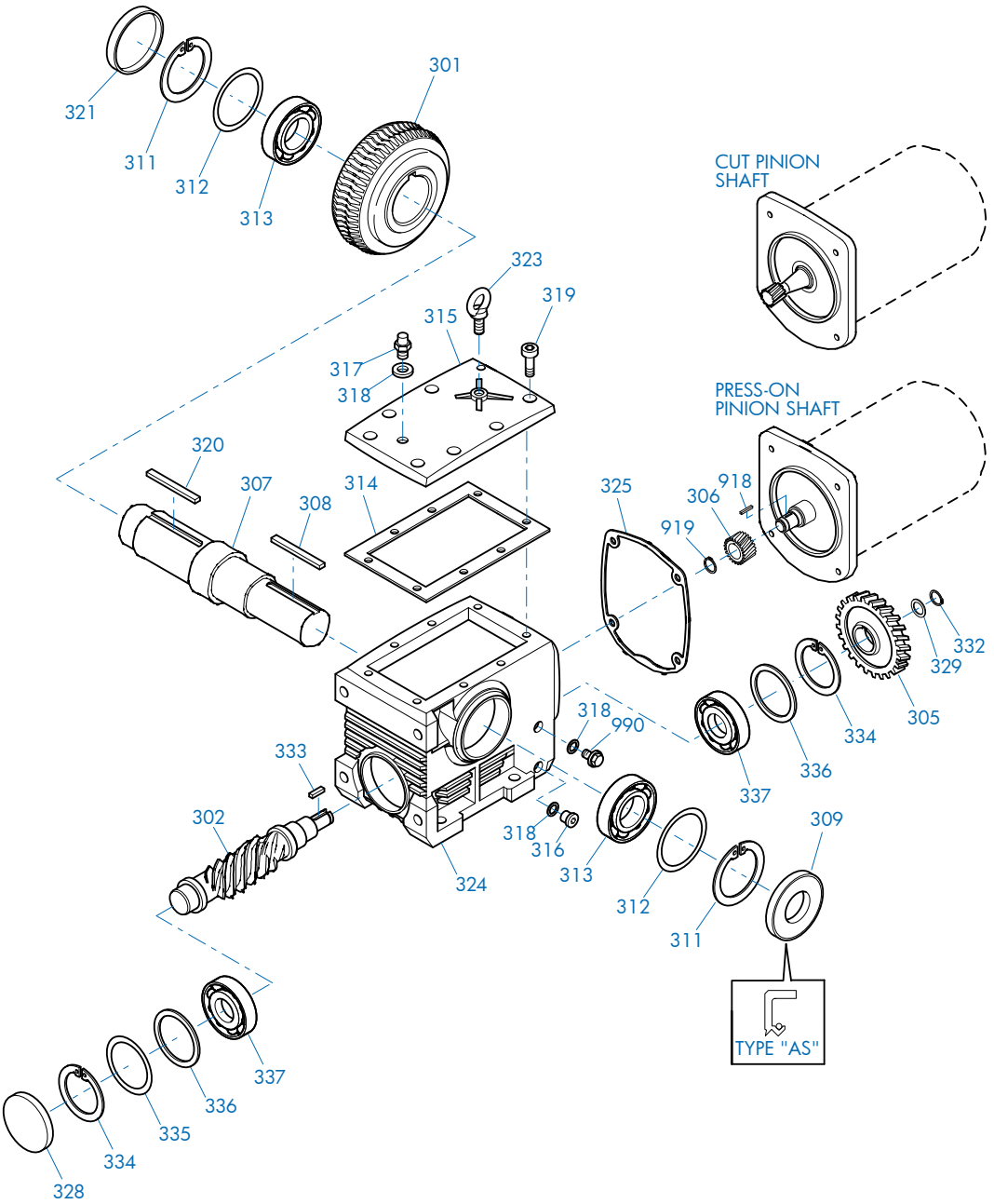

301	Worm Wheel	315	Inspection Cover	329	Thrust Washer
302	Worm	316	Drain Plug	332	Snap Ring
305	Gear	317	Vent Plug	333	Key
306	Pinion	318	Gasket	334	Snap Ring
307	Output Shaft	319	Socket Head Screw	335	Shim
308	Key	320	Key	336	Thrust Washer
309	Oil Seal	321	Bore Plug	337	Anti-Friction Bearing
311	Snap Ring	323	Flanged Eye Bolt	918	Key
312	Shim	324	Gearcase	919	Snap Ring
313	Anti-Friction Bearing	325	Gasket	990	Oil Level Plug
314	Gasket	328	Bore Plug		

SERVICE

Send Quote Requests to info@automatedpt.com
Call +1(800)985-6929 To Order or Order Online At Nordgearmotors.com

Send Quote Requests to info@automatedpt.com
Call +1(800)985-6929 To Order or Order Online At Nordgearmotors.com

Helical-worm SK02040 - SK42125VF

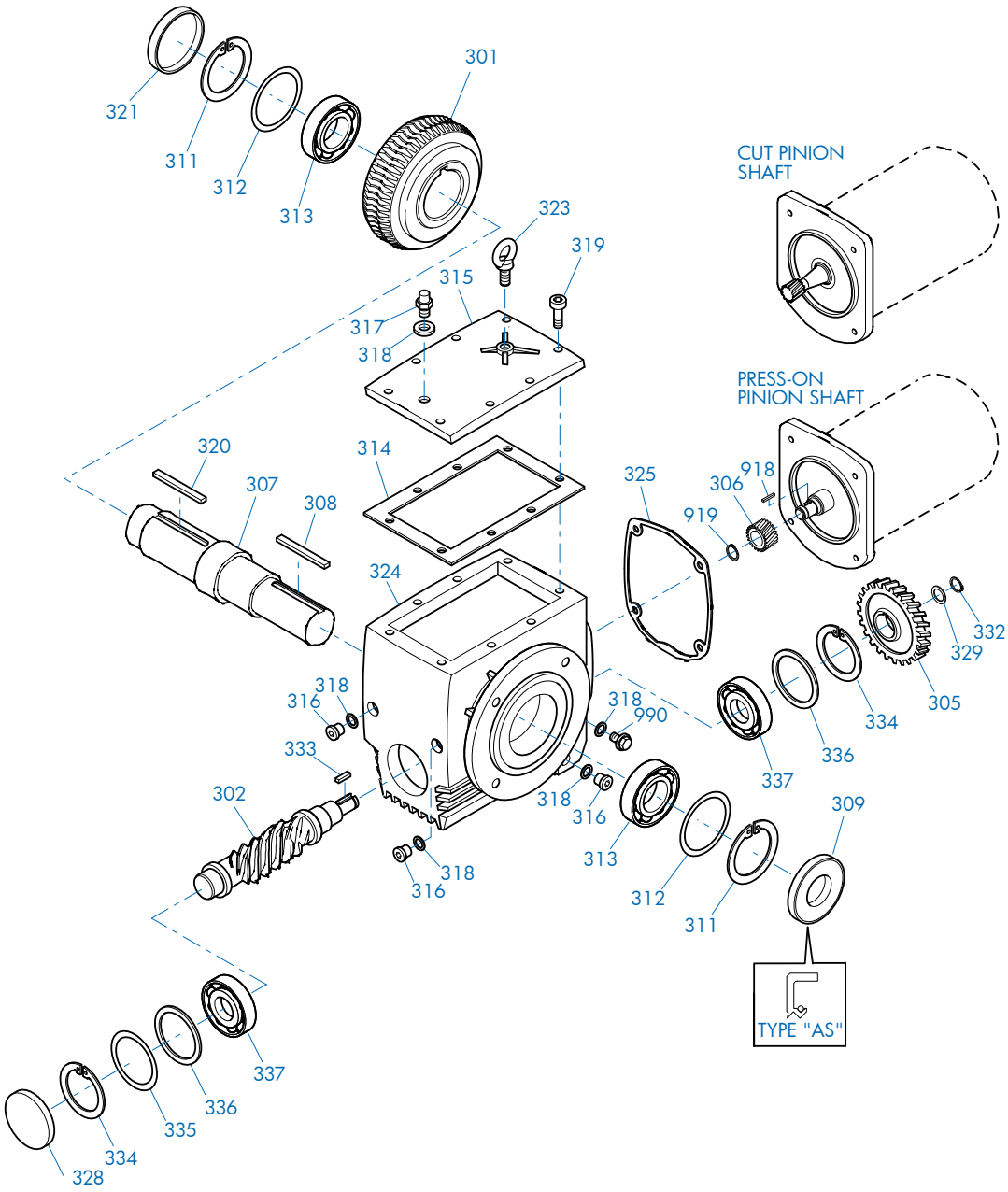

301	Worm Wheel	315	Inspection Cover	329	Thrust Washer
302	Worm	316	Drain Plug	332	Snap Ring
305	Gear	317	Vent Plug	333	Key
306	Pinion	318	Gasket	334	Snap Ring
307	Output Shaft	319	Socket Head Screw	335	Shim
308	Key	320	Key	336	Thrust Washer
309	Oil Seal	321	Bore Plug	337	Anti-Friction Bearing
311	Snap Ring	323	Flanged Eye Bolt	918	Key
312	Shim	324	Gearcase	919	Snap Ring
313	Anti-Friction Bearing	325	Gasket	990	Oil Level Plug
314	Gasket	328	Bore Plug		

SERVICE

Send Quote Requests to info@automatedpt.com
Call +1(800)985-6929 To Order or Order Online At Nordgearmotors.com

Send Quote Requests to info@automatedpt.com
Call +1(800)985-6929 To Order or Order Online At Nordgearmotors.com

Helical-worm SK02040 - SK42125AZAF

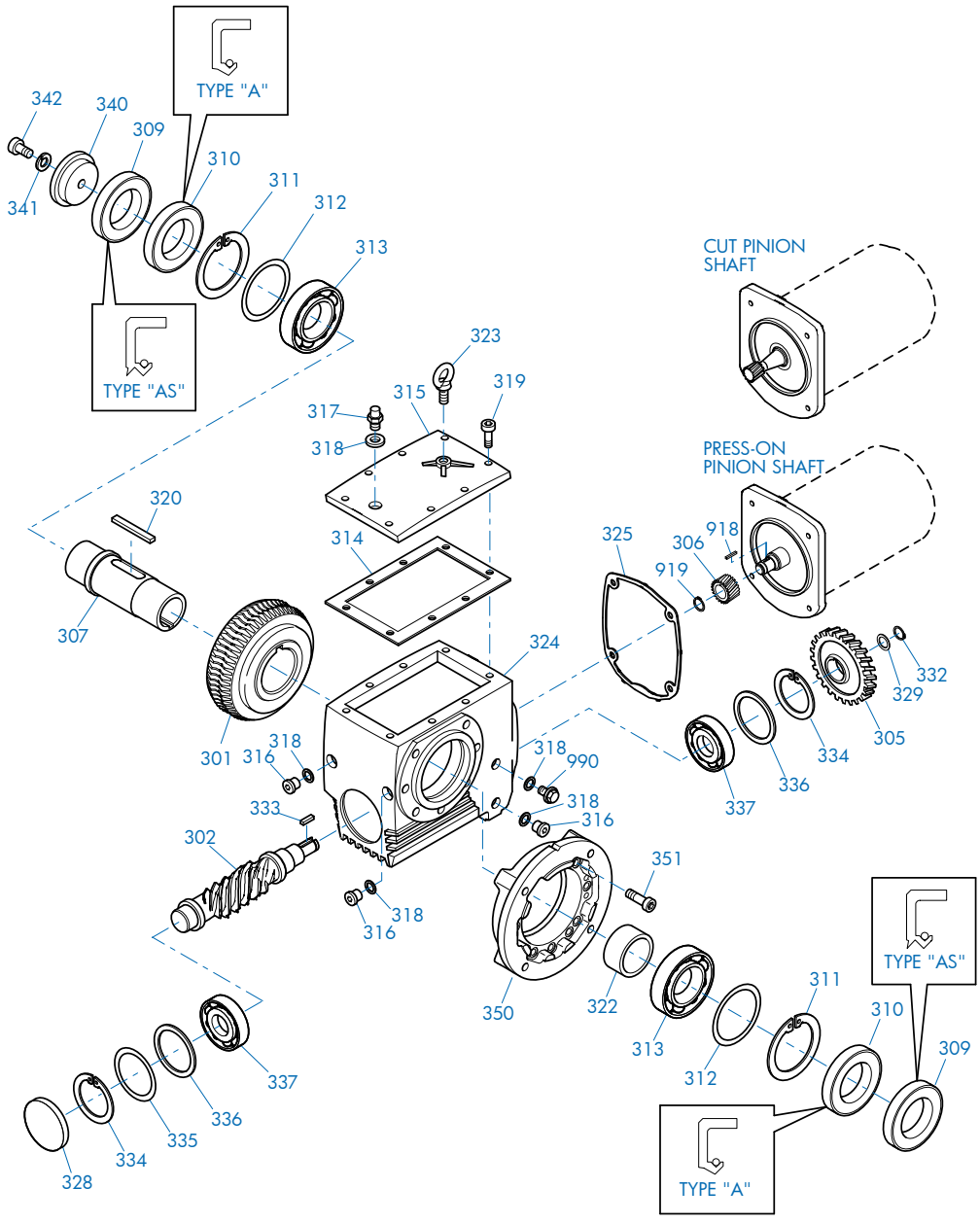

301	Worm Wheel	317	Vent Plug	335	Shim
302	Worm	318	Gasket	336	Thrust Washer
305	Gear	319	Socket Head Screw	337	Anti-Friction Bearing
306	Pinion	320	Key	340	Retaining Washer
307	Output Shaft	322	Spacer	341	Lock Washer
309	Oil Seal	323	Flanged Eye Bolt	342	Bolt
310	Oil Seal	324	Gearcase	350	Flange
311	Snap Ring	325	Gasket	351	Bolt
312	Shim	328	Bore Plug	918	Key
313	Anti-Friction Bearing	329	Thrust Washer	919	Snap Ring
314	Gasket	332	Snap Ring	990	Oil Level Plug
315	Inspection Cover	333	Key		
316	Drain Plug	334	Snap Ring		

SERVICE

Send Quote Requests to info@automatedpt.com
Call +1(800)985-6929 To Order or Order Online At Nordgearmotors.com

Send Quote Requests to info@automatedpt.com
Call +1(800)985-6929 To Order or Order Online At Nordgearmotors.com

Helical-worm SK02040 - SK42125VF

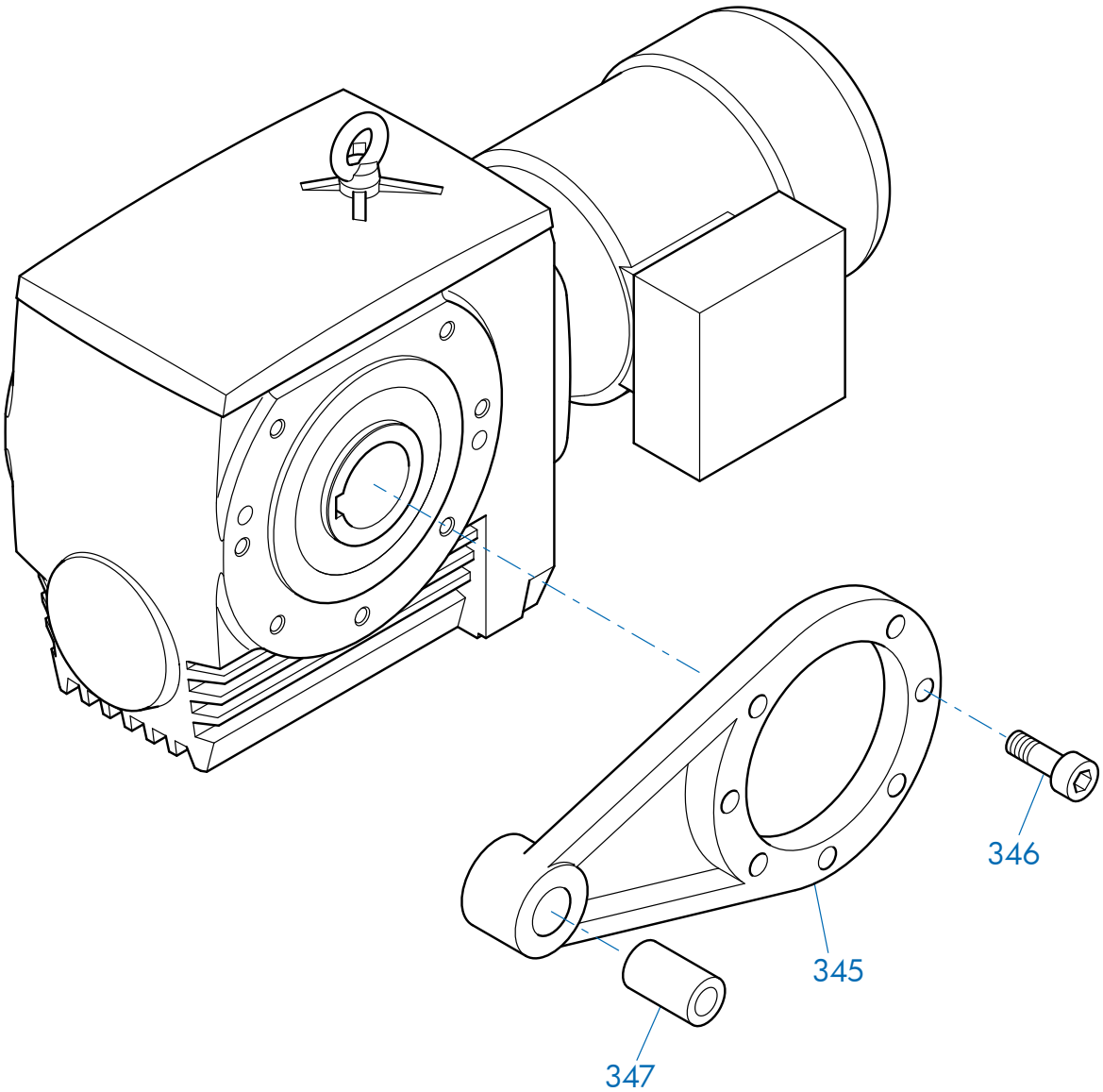

345 Torque Arm	346 Bolt	347 Bushing

Send Quote Requests to info@automatedpt.com
Call +1(800)985-6929 To Order or Order Online At Nordgearmotors.com

Send Quote Requests to info@automatedpt.com
Call +1(800)985-6929 To Order or Order Online At Nordgearmotors.com

Parts Lists

Input Single-stage Reduction

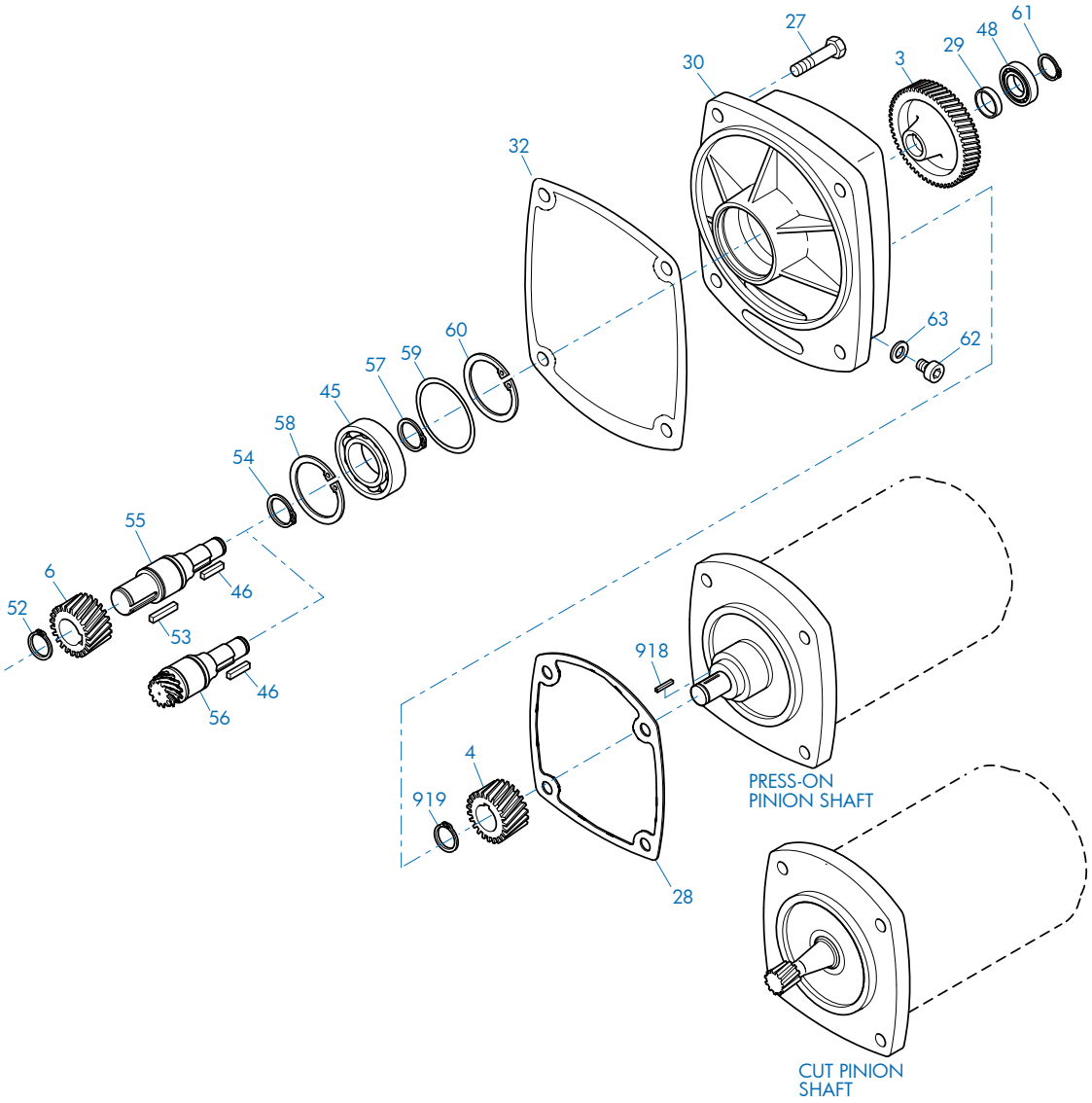

3	Gear	46	Key	59	Shim
4	Pinion	48	Anti-Friction Bearing	60	Snap Ring
6	Pinion	52	Snap Ring	61	Snap Ring
27	Bolt	53	Key	62	Oil Plug
28	Gasket	54	Snap Ring	63	Gasket
29	Spacer	55	Intermediate Shaft, Plain	918	Key
30	Third Reduction Gearcase	56	Intermediate Shaft, Gearcut	919	Snap Ring
32	Gasket	57	Snap Ring		
45	Anti-Friction Bearing	58	Snap Ring		

SERVICE

Send Quote Requests to info@automatedpt.com
Call +1(800)985-6929 To Order or Order Online At Nordgearmotors.com

Send Quote Requests to info@automatedpt.com
Call +1(800)985-6929 To Order or Order Online At Nordgearmotors.com

Input Multi-stage Reduction

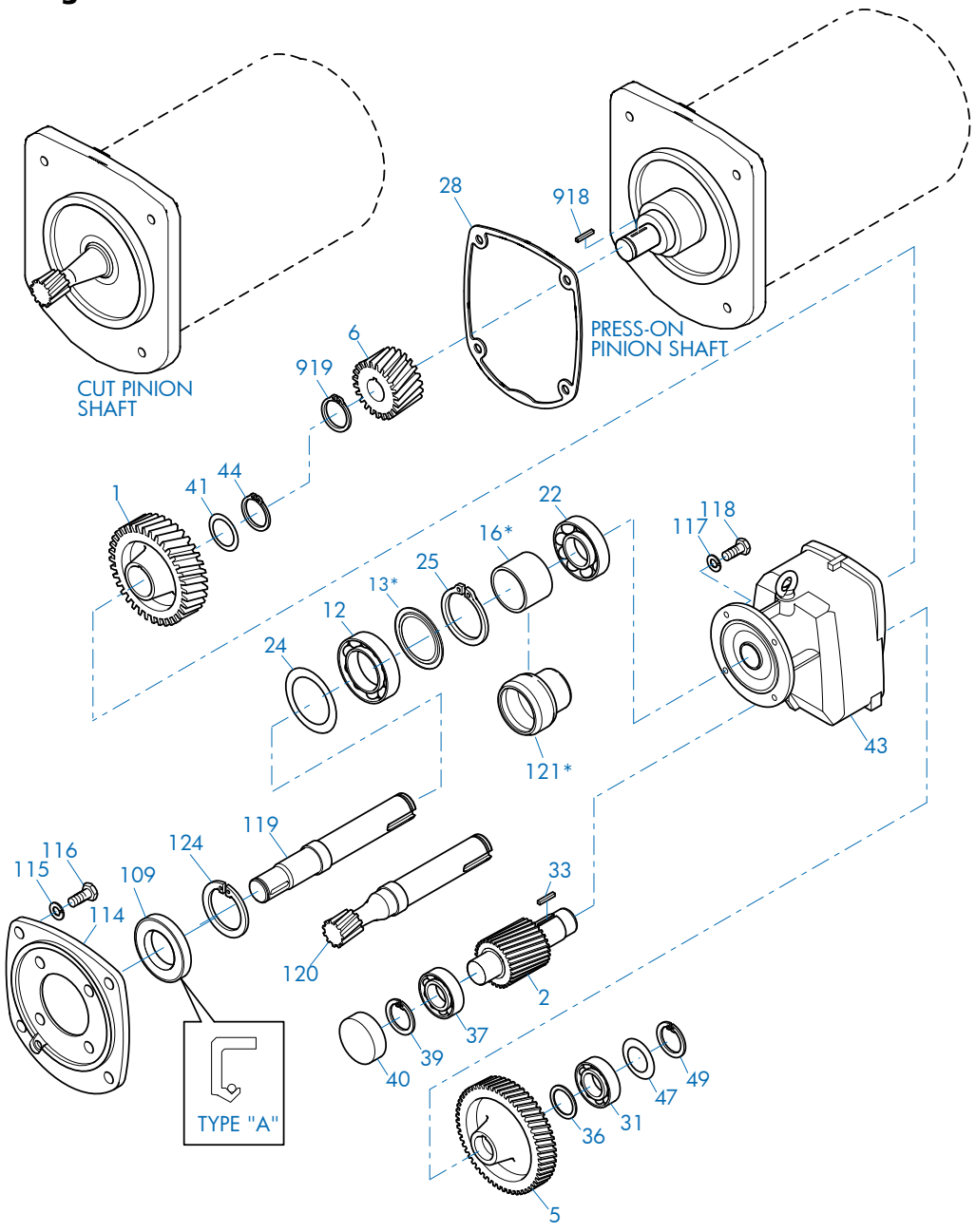

1	Gear	33	Key	115	Lock Washer
2	Pinion Shaft	36	Spacer	116	Bolt
5	Gear	37	Anti-Friction Bearing	117	Lock Washer
6	Pinion	39	Snap Ring	118	Bolt
12	Anti-Friction Bearing	40	Bore Plug	119	Intermediate Shaft, Plain
13	Nilos Ring*	41	Shim	120	Intermediate Shaft, Gearcut
16	Spacer*	43	Gearcase	121	Bearing Sleeve*
22	Anti-Friction Bearing	44	Snap Ring	124	Snap Ring
24	Shim	47	Shim	918	Key
25	Snap Ring	49	Snap Ring	919	Snap Ring
28	Gasket	109	Oil Seal		
31	Anti-Friction Bearing	114	Intermediate Flange		

SERVICE

Send Quote Requests to info@automatedpt.com
Call +1(800)985-6929 To Order or Order Online At Nordgearmotors.com

Send Quote Requests to info@automatedpt.com
Call +1(800)985-6929 To Order or Order Online At Nordgearmotors.com

Parts Lists

DRIVESYSTEMS

Small Frame Motor

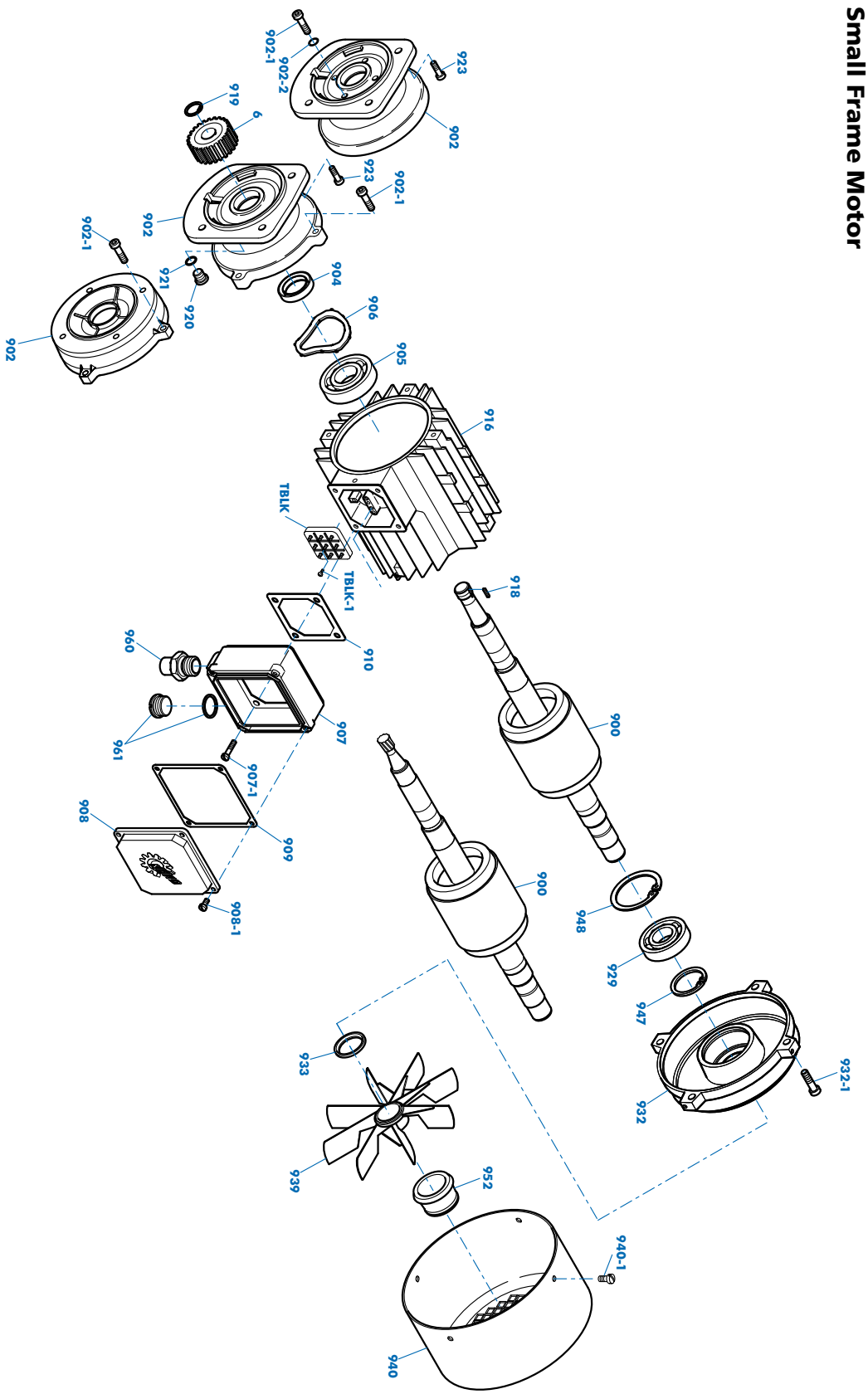

6	Pinion	907-1	Bolt	921	Gasket
900	Rotor With Shaft	908	Terminal Box Cover	923	Bolt
902	End Shield A	908-1	Bolt	929	Bearing B
902-1	Bolt	909	Terminal Box Cover Gasket	932	End Shield B
902-2	Gasket	910	Terminal Box Frame Gasket	932-1	Bolt
904	Oil Seal	916	Stator	933	Oil Seal
905	Bearing A	918	Key	939	Fan
906	Shim	919	Snap Ring	940	Fan Cover
907	Terminal Box Frame	920	Oil Plug	940-1	Screw

947	Snap Ring	TBLK	Terminal Block
948	Snap Ring	TBLK-1	Terminal block screw
952	Fan Clip		
960	NPT Adapter		
961	Plug & Gasket		

SERVICE

Send Quote Requests to info@automatedpt.com
Call +1(800)985-6929 To Order or Order Online At Nordgearmotors.com

Send Quote Requests to info@automatedpt.com
Call +1(800)985-6929 To Order or Order Online At Nordgearmotors.com

Large Frame Motor

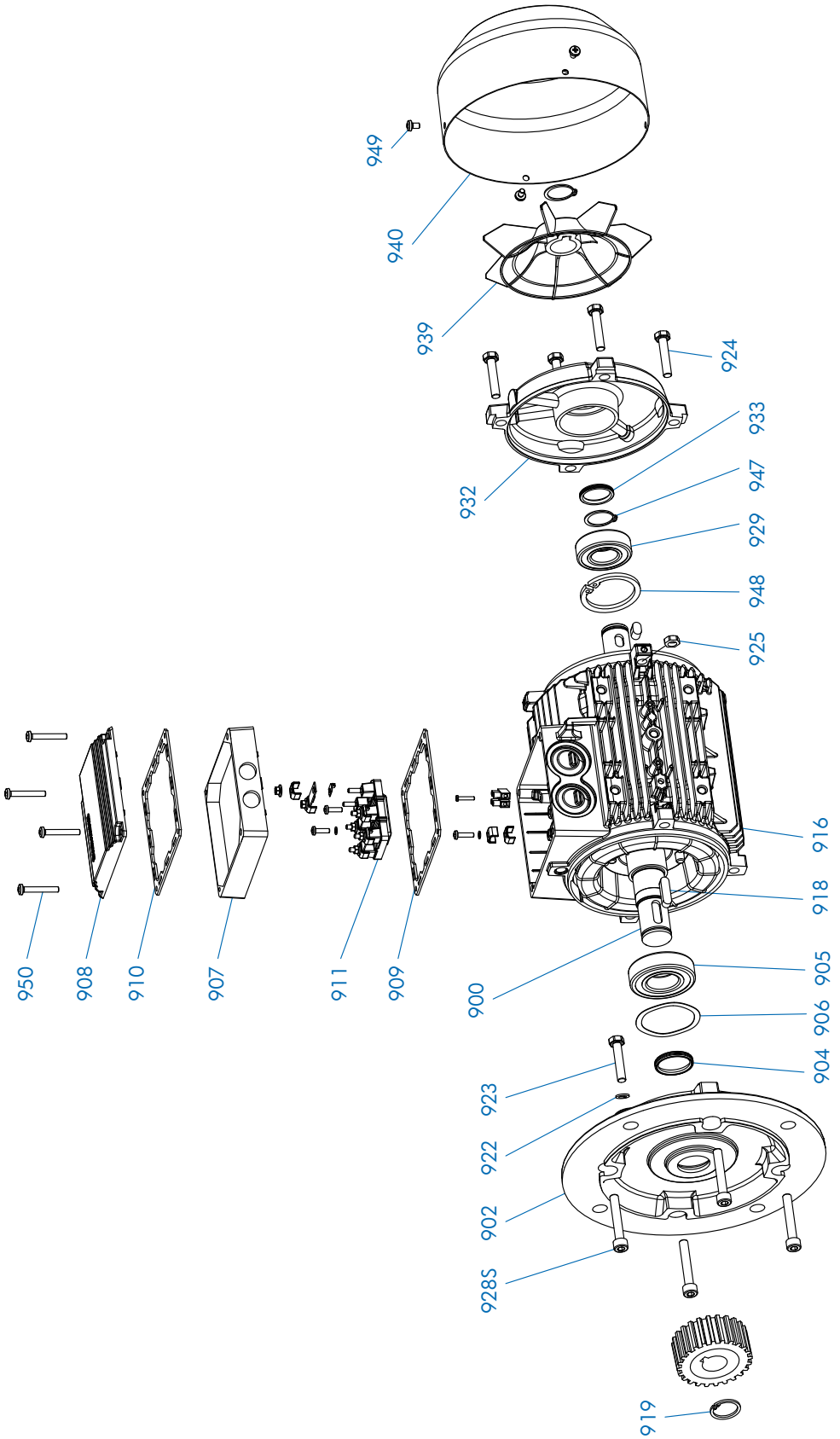

900	Rotor With Shaft	909	Terminal Box Frame Gasket	923	Bolt
902	End Shield A	910	Terminal Box Cover Gasket	924	Bolt
904	Oil Seal	911	Terminal Board	925	Hexagon Nut
905	Bearing A	916	Stator	928S	Bolt
906	Shim	918	Key	929	Bearing B
907	Terminal Box Frame	919	Snap Ring	932	End Shield B
908	Terminal Box Cover	922	Lock Washer	933	Oil Seal
				939	Fan
				940	Fan Cover
				947	Snap Ring
				948	Snap Ring
				949	Screw
				950	Bolt

SERVICE

Send Quote Requests to info@automatedpt.com
Call +1(800)985-6929 To Order or Order Online At Nordgearmotors.com

Send Quote Requests to info@automatedpt.com
Call +1(800)985-6929 To Order or Order Online At Nordgearmotors.com

Parts Lists

Input NEMA

56C
140TC
180TC

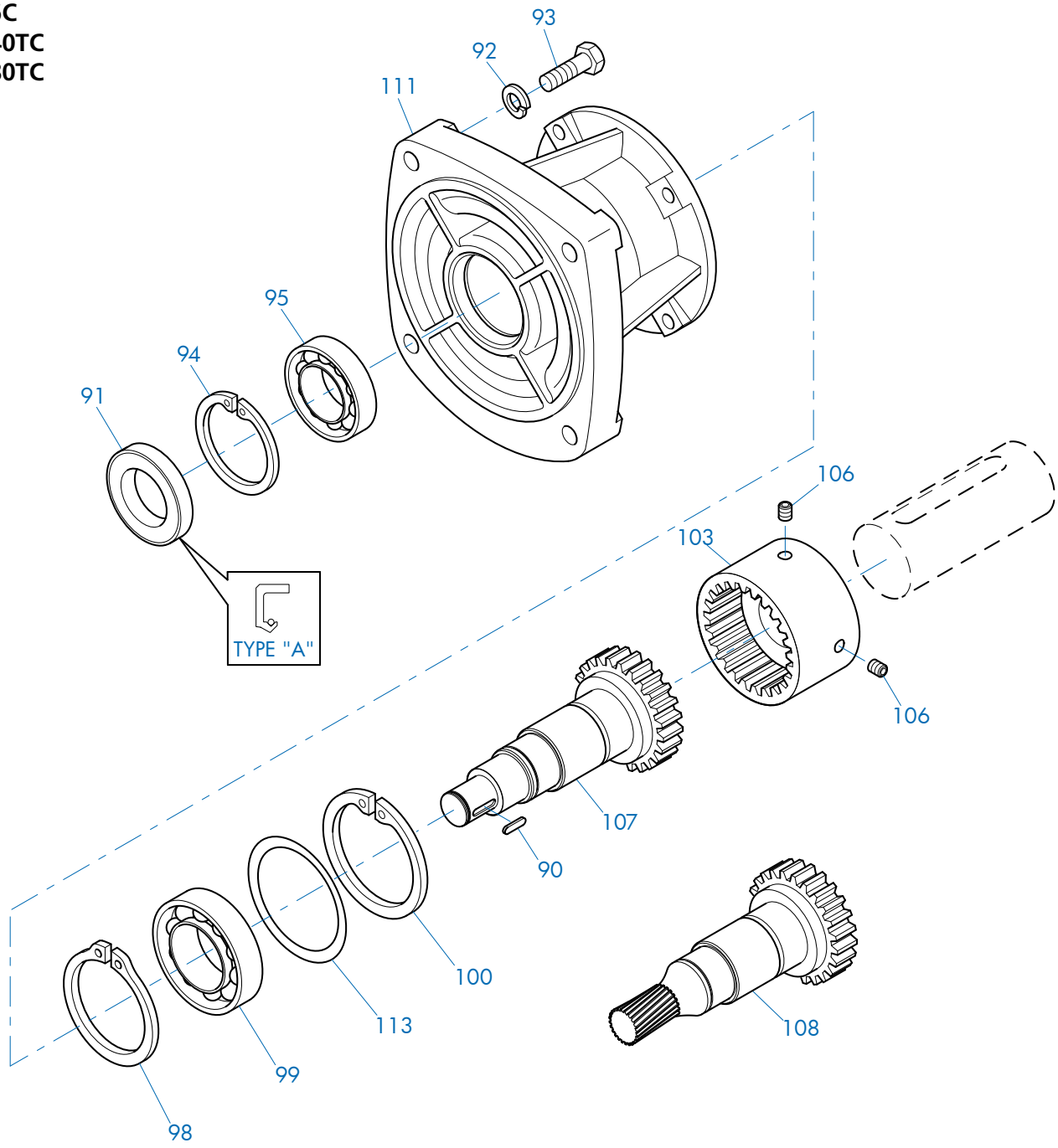

90	Key	95	Anti-Friction Bearing	106	Set Screw
91	Oil Seal	98	Snap Ring	107	Input Shaft, Plain
92	Lock Washer	99	Anti-Friction Bearing	108	Input Shaft, Gearcut
93	Bolt	100	Snap Ring	111	NEMA Adapter
94	Snap Ring	103	Coupling	113	Shim

SERVICE

Send Quote Requests to info@automatedpt.com
Call +1(800)985-6929 To Order or Order Online At Nordgearmotors.com

Send Quote Requests to info@automatedpt.com
Call +1(800)985-6929 To Order or Order Online At Nordgearmotors.com

Input NEMA

180TC
210TC
250TC
280TC

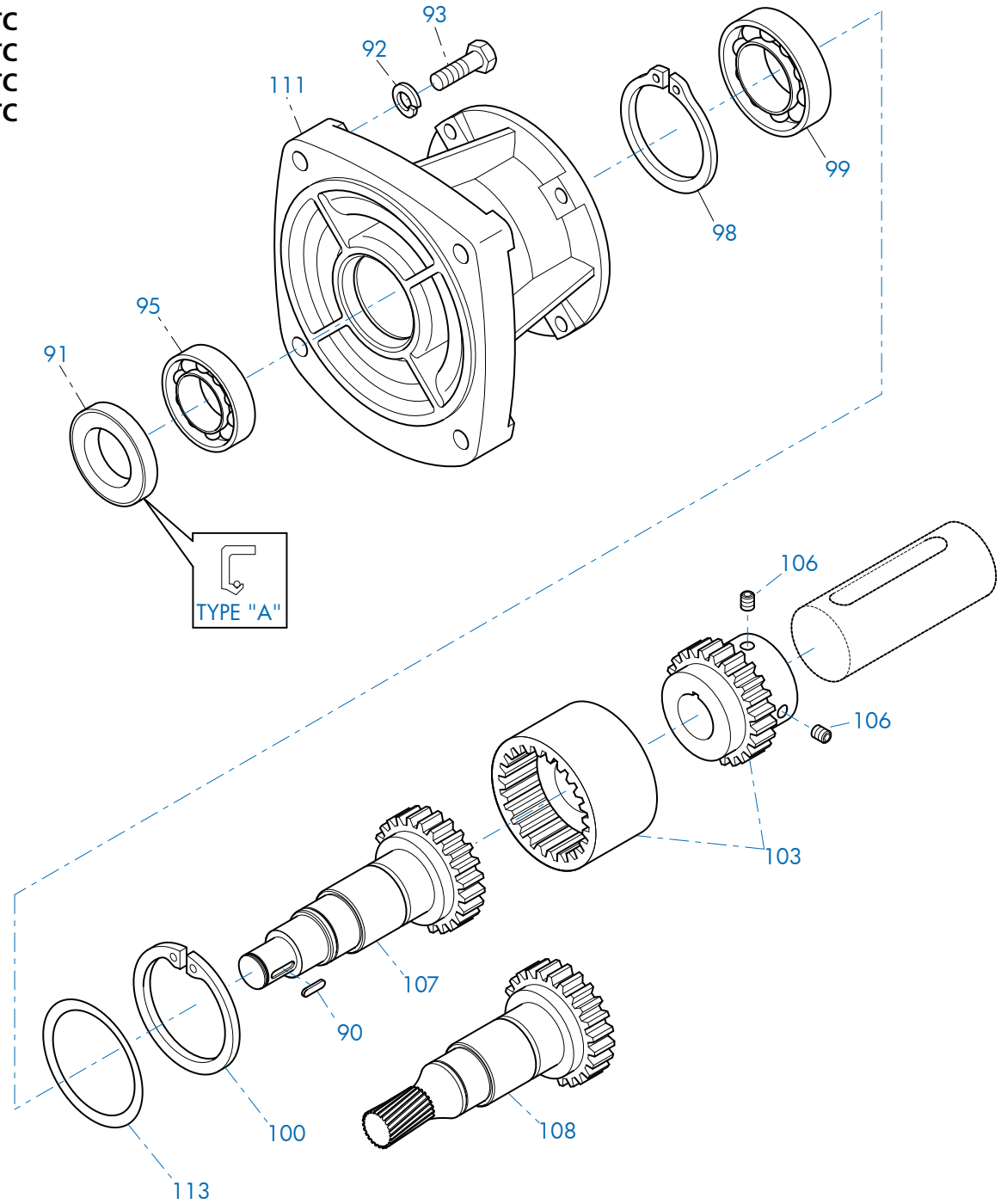

90	Key	98	Snap Ring	107	Input Shaft, Plain
91	Oil Seal	99	Anti-Friction Bearing	108	Input Shaft, Gearcut
92	Lock Washer	100	Snap Ring	111	NEMA Adapter
93	Bolt	103	Coupling	113	Shim
95	Anti-Friction Bearing	106	Set screw		

SERVICE

Send Quote Requests to info@automatedpt.com
Call +1(800)985-6929 To Order or Order Online At Nordgearmotors.com

Send Quote Requests to info@automatedpt.com
Call +1(800)985-6929 To Order or Order Online At Nordgearmotors.com

Parts Lists

Input NEMA

250TC
280TC
320TC
360TC

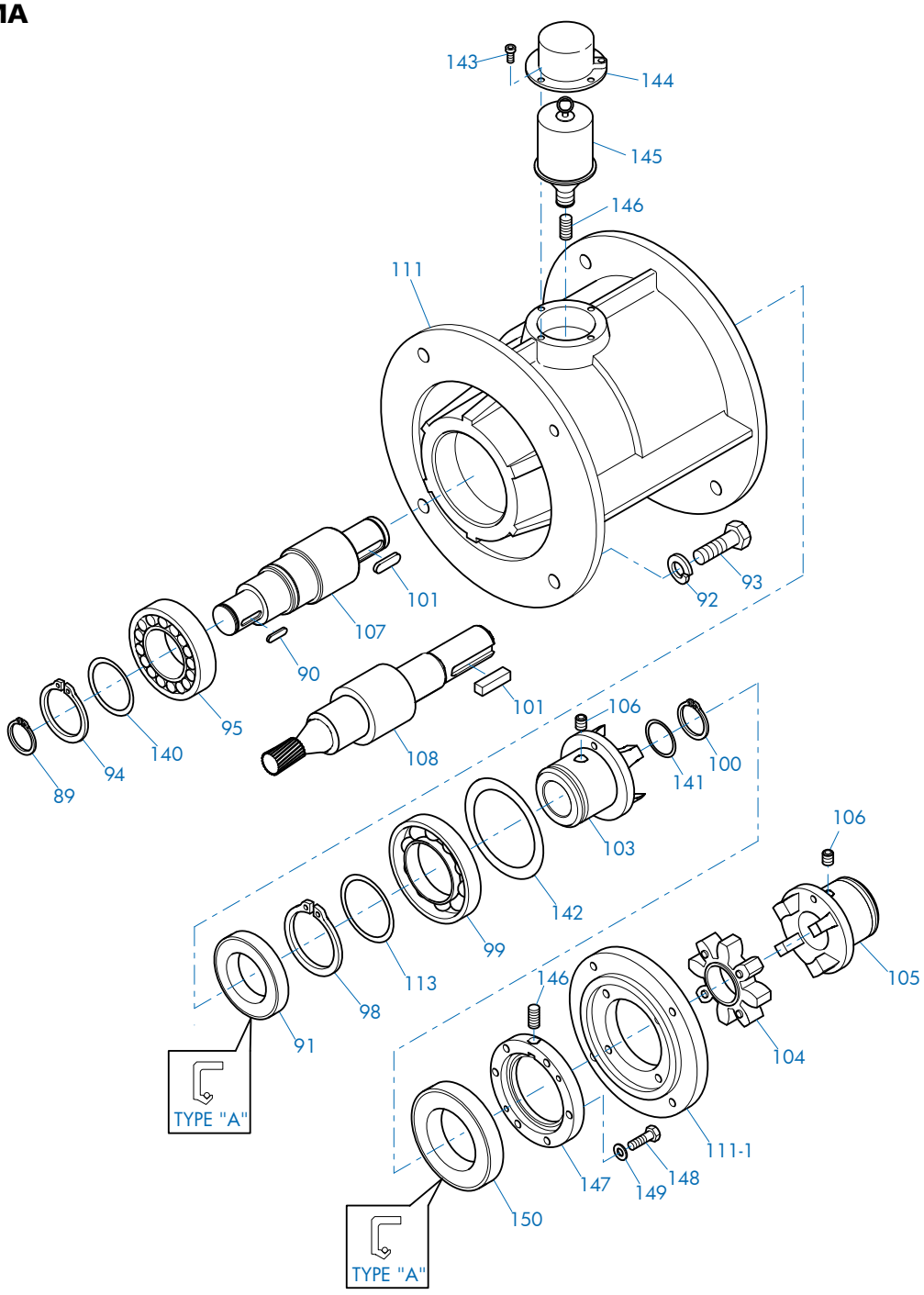

89	Snap Ring	99	Anti-Friction Bearing	108	Input Shaft, Gearcut	144	Cover
90	Key	100	Snap Ring	111	NEMA Adapter	145	Automatic Lubricator
91	Oil Seal	101	Key	111-1	Adapter Plate	146	Adapter
92	Lock Washer	103	Coupling Half	113	Shim	147	Bearing Cover
93	Bolt	104	Coupling Spider	140	Shim	148	Bolt
94	Snap Ring	105	Coupling Half	141	Shim	149	Lock Washer
95	Anti-Friction Bearing	106	Set Screw	142	Shim	150	Oil Seal
98	Snap Ring	107	Input Shaft, Plain	143	Bolt		

SERVICE

Send Quote Requests to info@automatedpt.com
Call +1(800)985-6929 To Order or Order Online At Nordgearmotors.com

Send Quote Requests to info@automatedpt.com
Call +1(800)985-6929 To Order or Order Online At Nordgearmotors.com

Input W

SK 02 - SK 52
SK 03 - SK 63
SK 0182NB - SK 6382
SK 02040 - SK 42125
SK 13050 - SK 43125
SK 92072 - SK 92772
SK 9012.1 - SK 9052.1
SK 9013.1 - SK 9053.1

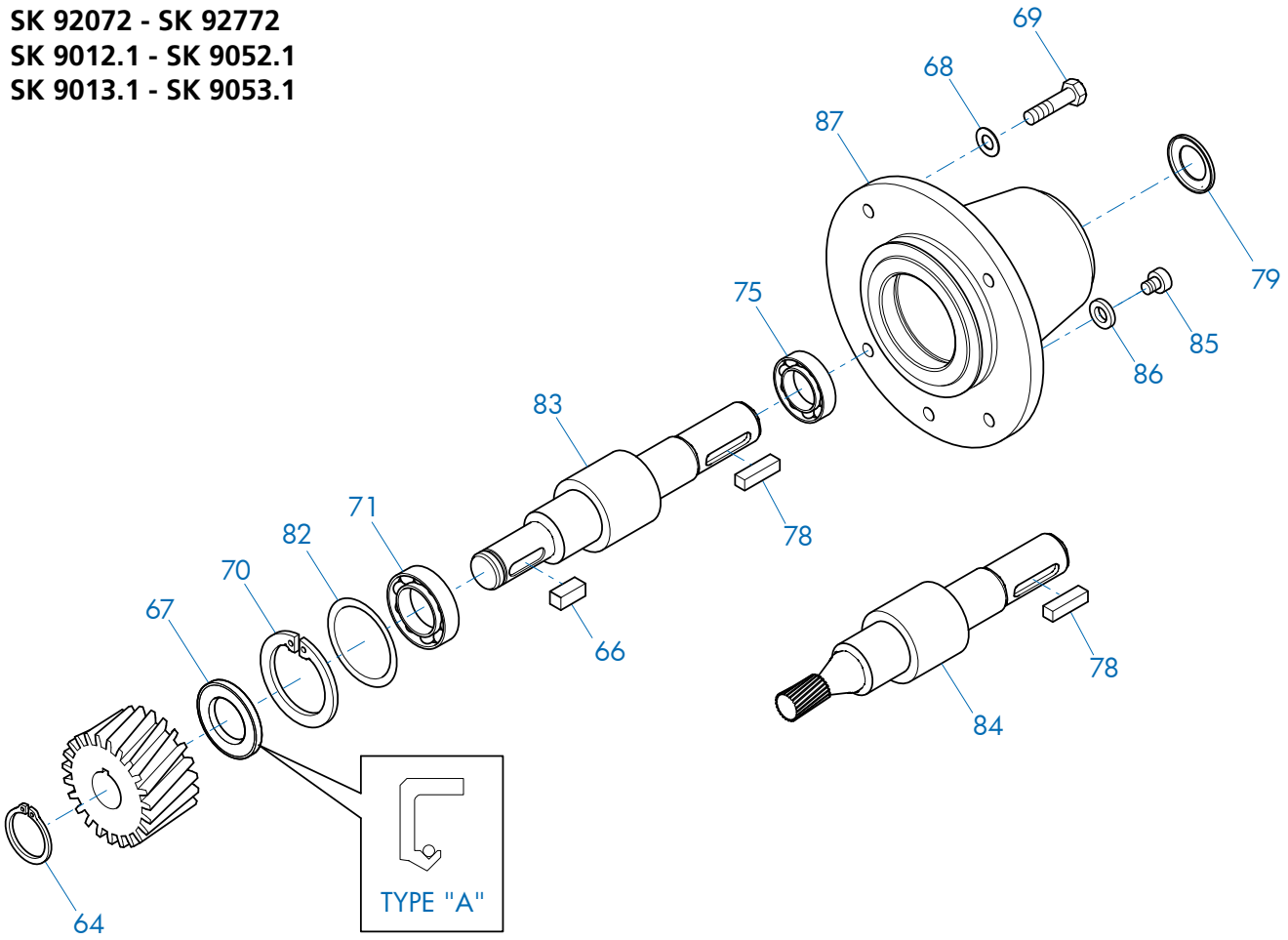

SERVICE

64	Snap Ring	71	Input Shaft Bearing	84	Input Shaft, Gearcut
66	Key	75	Input Shaft Bearing	85	Oil plug
67	Oil Seal	78	Key	86	Gasket
68	Lock Washer	79	Oil Flinger	87	W-Input Housing
69	Bolt	82	Shim		
70	Snap Ring	83	Input Shaft, Plain		

Send Quote Requests to info@automatedpt.com
Call +1(800)985-6929 To Order or Order Online At Nordgearmotors.com

Send Quote Requests to info@automatedpt.com Call +1(800)985-6929 To Order or Order Online At Nordgearmotors.com

Parts Lists

Input W

SK 62 - SK 72
SK 73 - SK 93
SK 6282 - SK 7282
SK 7382 - SK 9382
SK 9062

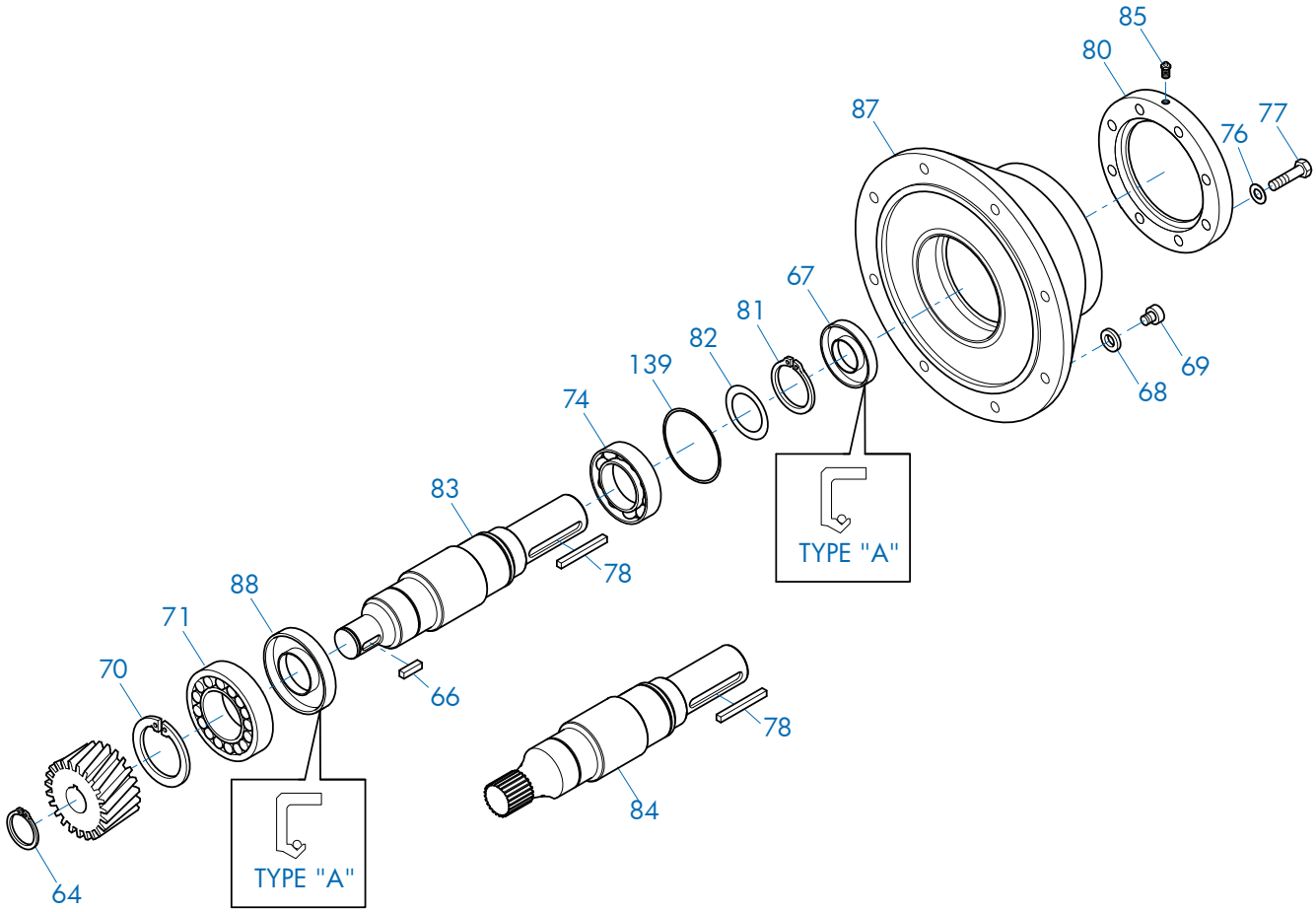

SERVICE

64	Snap Ring	70	Snap Ring	78	Key	84	Input Shaft, Gearcut
66	Key	71	Anti-Friction Bearing	80	Bearing Cover	85	Grease Fitting
67	Oil Seal	74	Anti-Friction Bearing	81	Snap Ring	87	W-Input Housing
68	Lock Washer	76	Lock Washer	82	Shim	88	Oil Seal
69	Bolt	77	Bolt	83	Input Shaft, Plain	139	Shim

Send Quote Requests to info@automatedpt.com
Call +1(800)985-6929 To Order or Order Online At Nordgearmotors.com

Send Quote Requests to info@automatedpt.com
Call +1(800)985-6929 To Order or Order Online At Nordgearmotors.com

Input W

SK 82 - SK 102
SK 103
SK 8282 - SK 9282
SK 9082 - SK 9092

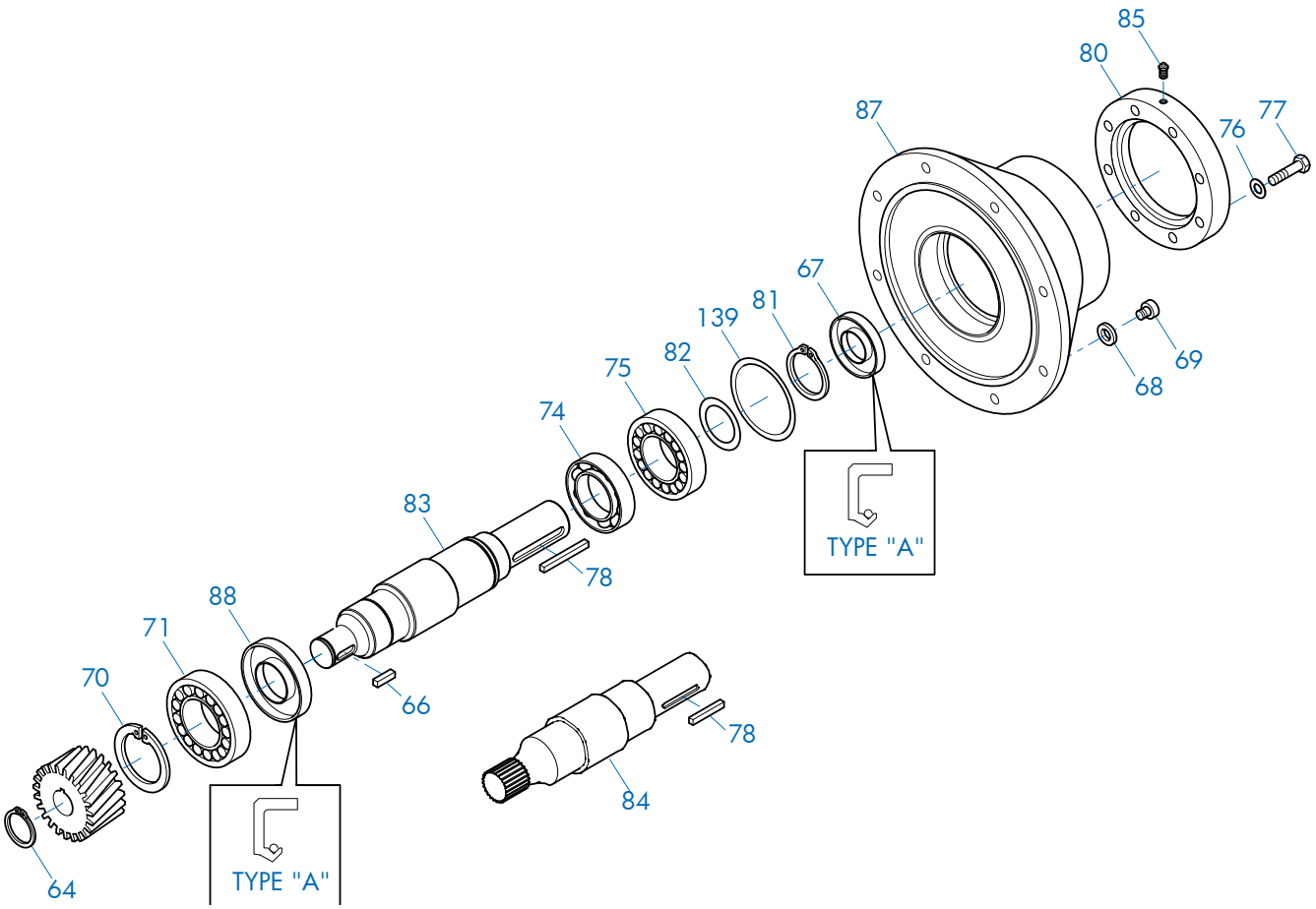

64	Snap Ring	71	Anti-Friction Bearing	80	Bearing Cover	87	W-Input Housing
66	Key	74	Anti-Friction Bearing	81	Snap Ring	88	Oil Seal
67	Oil Seal	75	Input Shaft Bearing	82	Shim	139	Shim
68	Lock Washer	76	Lock Washer	83	Input Shaft, Plain		
69	Bolt	77	Bolt	84	Input Shaft, Gearcut		
70	Snap Ring	78	Key	85	Grease Fitting		

Send Quote Requests to info@automatedpt.com
Call +1(800)985-6929 To Order or Order Online At Nordgearmotors.com

Send Quote Requests to info@automatedpt.com
Call +1(800)985-6929 To Order or Order Online At Nordgearmotors.com

Parts Lists

Input W

SK 10282 - SK 12382

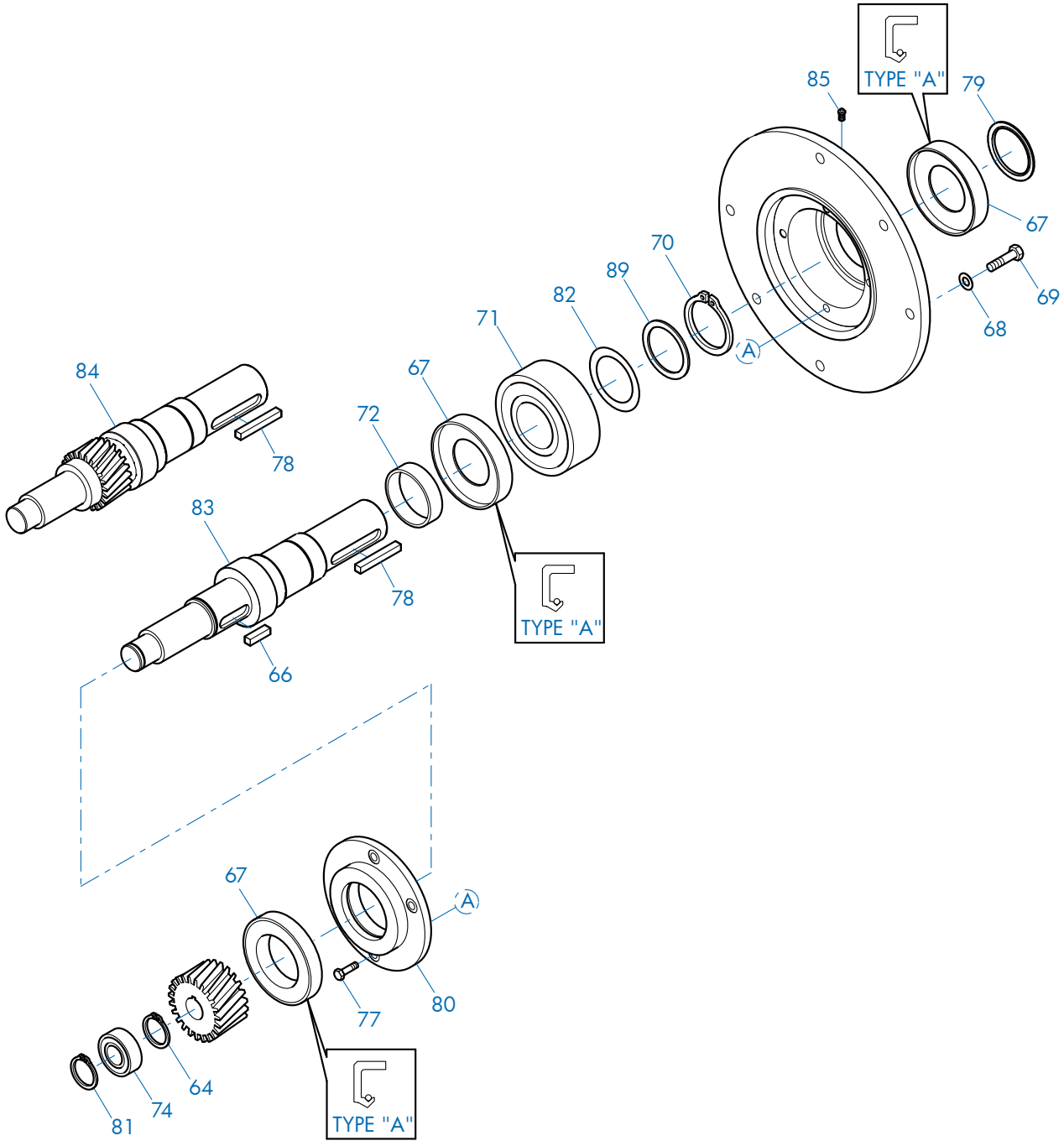

64	Snap Ring	70	Snap Ring	78	Key	83	Input Shaft, Plain
66	Key	71	Anti-Friction bearing	79	Oil Flinger	84	Input Shaft, Gearcut
67	Oil Seal	72	Spacer	80	Bearing Cover	85	Grease Fitting
68	Lock Washer	74	Anti-Friction Bearing	81	Snap Ring	89	Thrust Washer
69	Bolt	77	Bolt	82	Shim		

Send Quote Requests to info@automatedpt.com
Call +1(800)985-6929 To Order or Order Online At Nordgearmotors.com

Products & Key Features

Products & Key Features

- Company Overview
- In-line
- Nordbloc
- Clincher™ Shaft Mount
- 92 Bevel
- 90.1 Bevel
- Helical-worm
- Minicase
- Flexbloc
- Motors
- Trio
- SK 500E
- SK 700E
- Vector MC
- Nordisc™
- Titan™
- Key Features

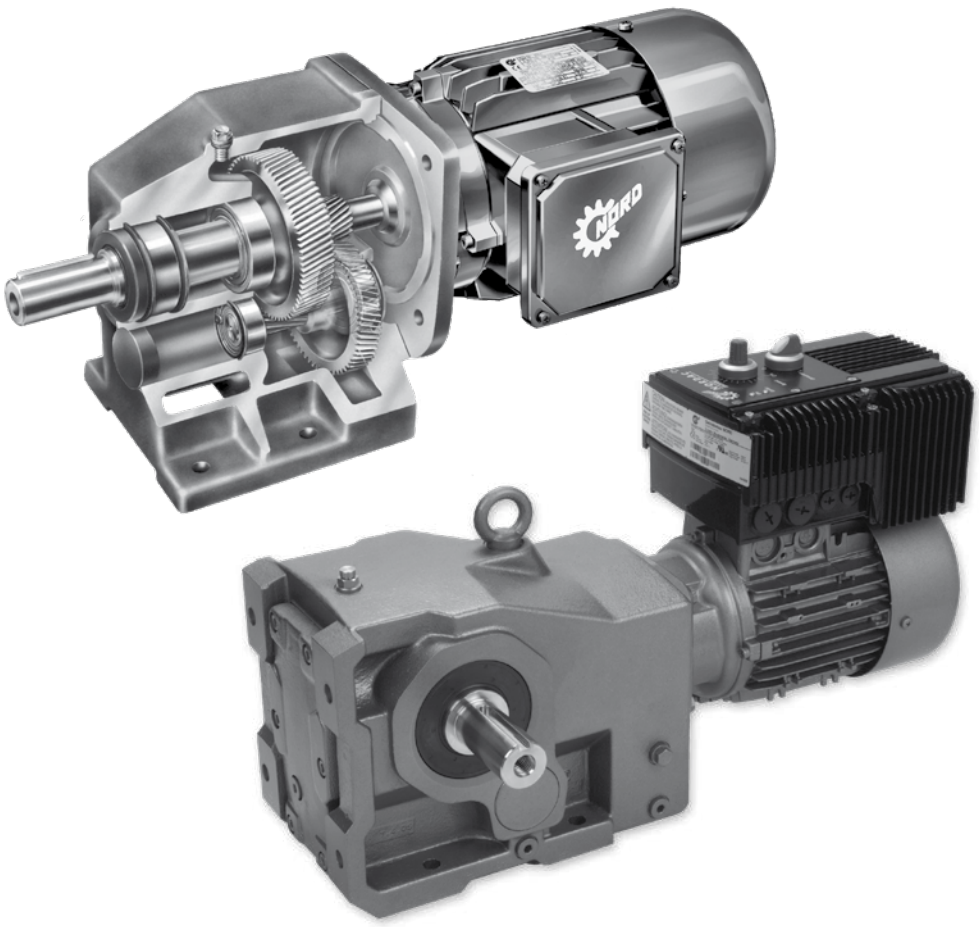

NORD® DRIVESYSTEMS

www.nord.com



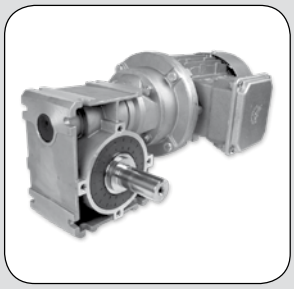

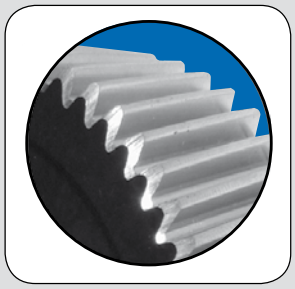

Send Quote Requests to info@automatedpt.com Call +1(800)985-6929 To Order or Order Online At Nordgearmotors.com

Product Overview

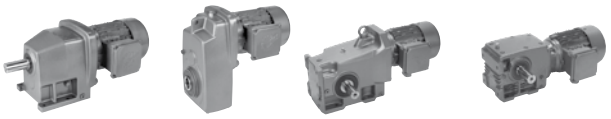

Company Overview

Since 1965, NORD Gear has grown to global proportions on the strength of product performance, superior customer service, and intelligent solutions to a never-ending variety of industrial challenges.

All mechanical and electrical components of a drive are available from NORD Gear. Our products cover the full range of drive equipment: helical in-line, Clincher™ shaft-mount, helical-bevel, and helical-worm gearboxes from 1/6 hp to 250 hp, with torques from 90 lb-in to 900,000 lb-in.

But NORD Gear does far more than manufacture the world's finest drive components. We provide our customers with optimum drive configurations for their specific purposes, providing each and every one of them with truly complete and efficient systems at a price/quality ratio unmatched in today's fast-changing markets.

NORD Gear makes its wide range of products easily available through a global network that provides all customers with prompt delivery and expert support services to consistently exceed customer expectations. We are firmly committed to being totally responsive to the ideas and specifications of every customer, anywhere in the world.

In-line "Helical" Reducers (Section B)

Power : 0.16 – 200 hp
Torque: up to 205,000 lb-in
Sizes : 11 case sizes

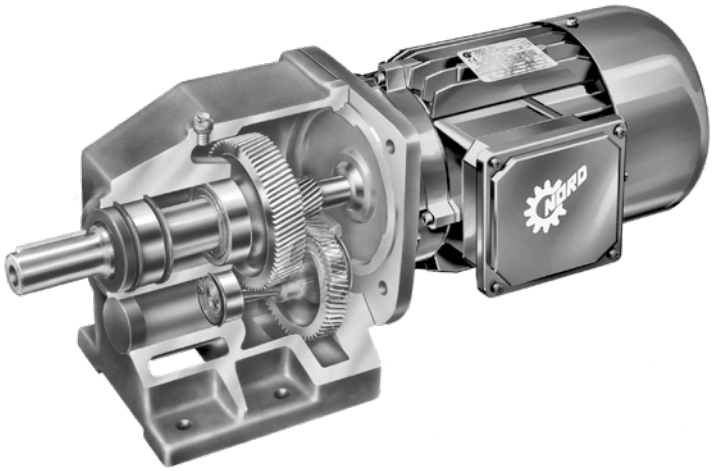

Features

- Foot or Flange Mount
- 1/6 to 200 hp
- Torque up to 205,000 lb-in
- Output speeds from 0.1 to 960 rpm
- Gear ratios from 1.82:1 to over 300,000:1
- Up to 98.5% efficient
- Ideal for pumps and conveyors
- Eliminates belts and chains

Reductions	Ratio Range		
Single	1.24:1	–	14.80:1
Double	2.76:1	–	105.08:1
Triple	13.30:1	–	1071.82:1
Quadruple	82.39:1	–	2798.93:1
Quintuple	106.25:1	–	3560.53:1
Sextuple	1604.04:1	–	14340.31:1

Send Quote Requests to info@automatedpt.com
Call +1(800)985-6929 To Order or Order Online At Nordgearmotors.com

Send Quote Requests to info@automatedpt.com Call +1(800)985-6929 To Order or Order Online At Nordgearmotors.com

NORDBLOC (Catalog G1011 or G1012)

Power : 0.16 – 50 hp
Torque: up to 28,320 lb-in
Sizes : 11 case sizes

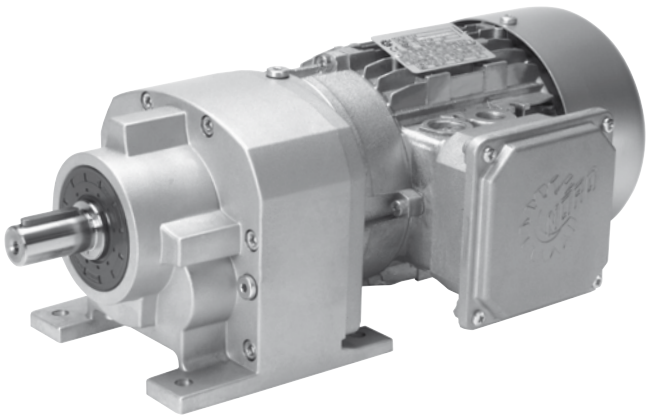

Features

- Foot or Flange Mount
- 1/6 to 50 hp
- Torque up to 26,550 lb-in
- Output speeds from 4.8 to 900 rpm
- Gear ratios from 1.88:1 to over 370:1
- Up to 97% efficient
- High torque in a small package
- Replaces most European designs

Reductions	Ratio Range		
Double	2.12:1	–	81.45:1
Triple	17.42:1	–	402.8:1

CLINCHER™ Offset Parallel "Shaft Mount" Reducers (Section C)

Power : 0.16 – 200 hp
Torque: up to 769,000 lb-in
Sizes : 13 case sizes

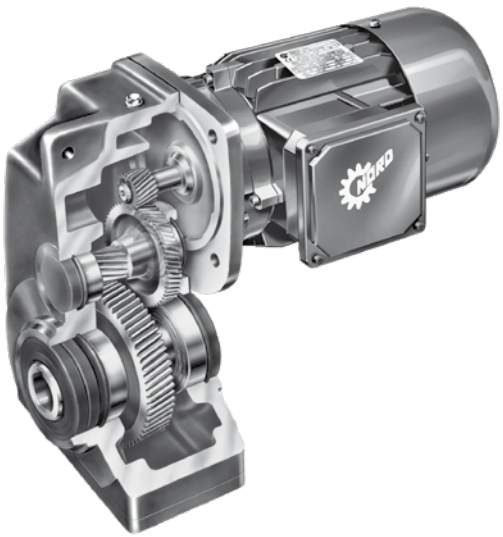

Features

- Shaft, Foot or Flange Mount
- Solid or hollow shaft
- 1/6 to 200 hp
- Torque up to 797,000 lb-in
- Output speeds from 0.1 to 410 rpm
- Gear ratios from 4.26:1 to over 300,000:1
- More than 50 ratios per case size
- Up to 97% efficient
- Excellent for conveyor and travel drives
- Heavy-duty bearings for vertical mixers
- Integral motor eliminates belts and motor platform

Reductions	Ratio Range		
Double	4.03:1	–	155.40:1
Triple	16.28:1	–	1585.08:1
Quadruple	87.73:1	–	3608.19:1
Quintuple	159.73:1	–	6616.79:1

Send Quote Requests to info@automatedpt.com
Call +1(800)985-6929 To Order or Order Online At Nordgearmotors.com

Product Overview

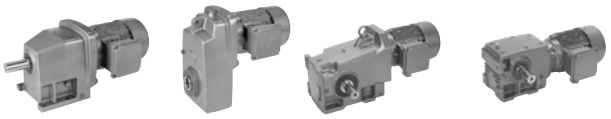

92 Series Bevel (Section D)

Power: 0.16 – 7.5 hp
Torque: up to 5,840 lb-in
Sizes: 5 case sizes

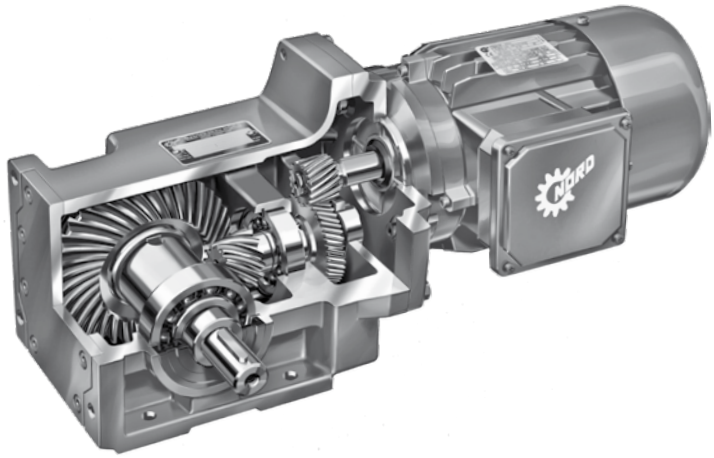

Features

- Foot, Flange, or Shaft Mount
- Solid or hollow shaft
- 1/6 to 7.5 hp
- Torque up to 5,840 lb-in
- Output speeds from 24 to 360 rpm
- Gear ratios from 4.1:1 to 72:1
- Up to 97% efficient
- Small package size
- Replaces worm drives
- Long-life wear-free gears

Reductions	Ratio Range		
Double	4.1:1	–	72:1

90.1 Bevel (Section D)

Power : 0.16 – 200 hp
Torque: up to 442,500 lb-in
Sizes : 15 case sizes

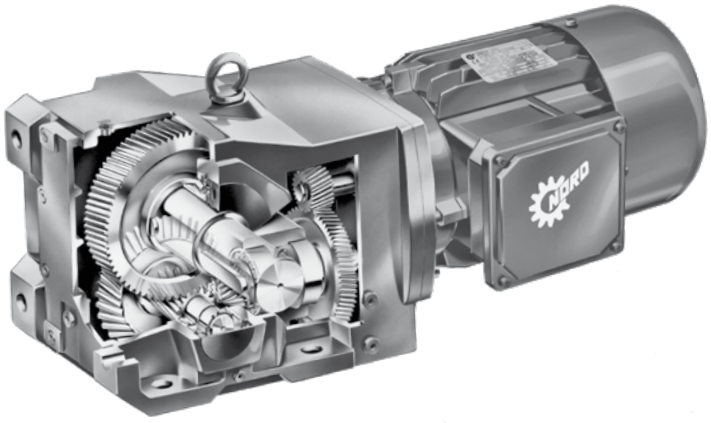

Features

- Foot, Flange, or Shaft Mount
- Solid or hollow shaft
- 1/6 to 200 hp
- Torque up to 442,500 lb-in
- Output speeds from 0.1 to 218 rpm
- Gear ratios from 8.04:1 to over 300,000:1
- Up to 95% efficient
- Stackable for counter-rotating mixers
- Low backlash
- Long-life wear-free gearing
- Eliminates belts and chains

Reductions	Ratio Range		
Double	4.03:1	–	155.40:1
Triple	16.28:1	–	1585.08:1
Quadruple	87.73:1	–	3608.19:1
Quintuple	159.73:1	–	6616.79:1

Send Quote Requests to info@automatedpt.com
Call +1(800)985-6929 To Order or Order Online At Nordgearmotors.com

Send Quote Requests to info@automatedpt.com Call +1(800)985-6929 To Order or Order Online At Nordgearmotors.com

Right-angle "helical-worm" Reducers (Section E)

Power: 0.16 – 20 hp
Torque: up to 27,000 lb-in
Sizes: 6 case sizes

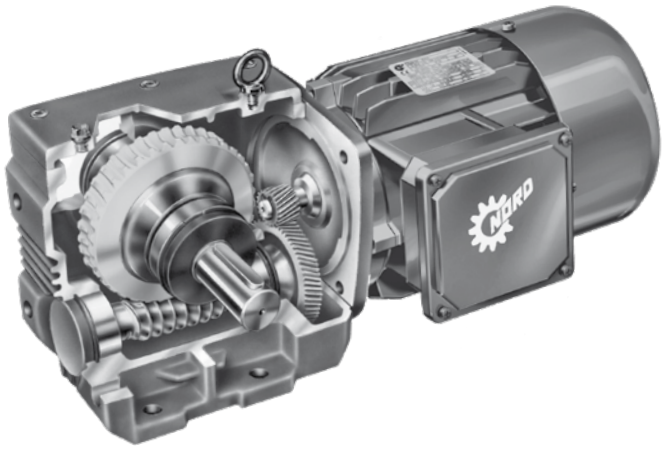

Features

- Foot, Flange, or Shaft Mount
- Solid or hollow shaft
- 1/6 to 20 hp
- Torque up to 27,585 lb-in
- Output speeds from 0.1 to 398 rpm
- Gear ratios from 4.40:1 to over 300,000:1
- More ratio choices; eliminates belts and chains
- Long-life synthetic oil

Reductions	Ratio Range		
Double	4.40:1	–	695.60:1
Triple	41.74:1	–	7095.12:1

Right-angle MINICASE® Worm Reducers (Catalog G1030)

Power: 0.16 – 2,0 hp
Torque: up to 2,400 lb-in
Sizes: 4 case sizes

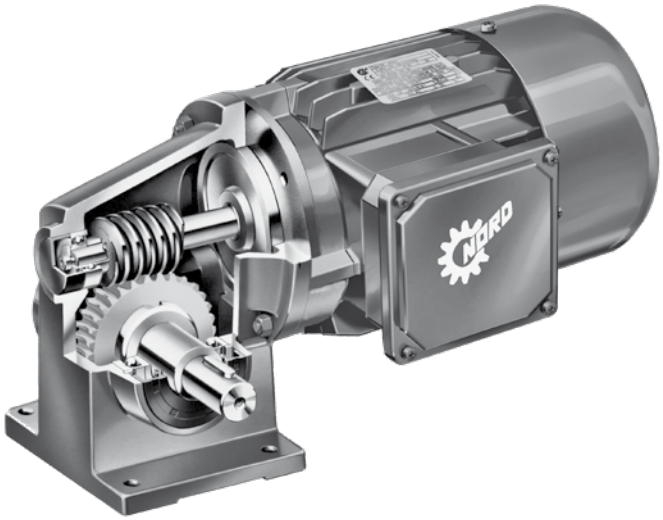

Features

- Foot, Flange, or Shaft Mount
- Solid or hollow shaft
- 1/6 to 2 hp
- Torque up to 2,390 lb-in
- Output speeds from 3 to 324 rpm
- Gear ratios from 5:1 to over 500:1
- Long-life synthetic oil
- Corrosion resistant
- Paint-free

Reductions	Ratio Range		
Double	5:1	–	100:1
Triple	25:1	–	500:1

Send Quote Requests to info@automatedpt.com
Call +1(800)985-6929 To Order or Order Online At Nordgearmotors.com

Send Quote Requests to info@automatedpt.com Call +1(800)985-6929 To Order or Order Online At Nordgearmotors.com

Product Overview



FLEXBLOC (Catalog G1033)

Power: 0.16 – 5 hp
Torque: up to 4,683 lb-in
Sizes: 5 case sizes

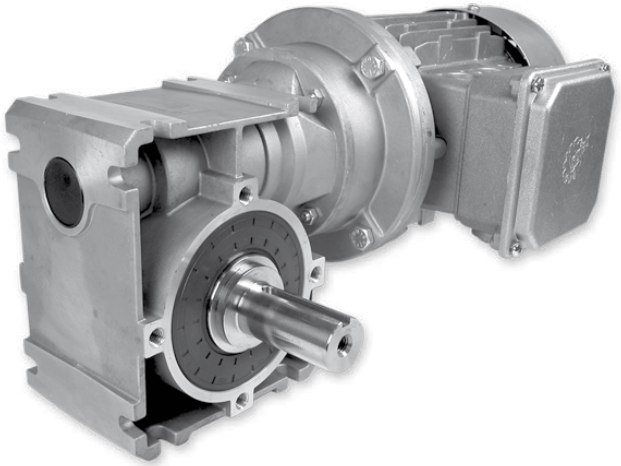

Features

- Foot, Flange, or Shaft Mount
- Hollow shaft or plug-in solid shaft
- 1/6 to 5 hp
- Torque up to 4,683 lb-in
- Gear ratios from 5, 7.5, 10,… 100,… 3000:1
- UNICASE™ design
- Modular construction
- High-capacity oversized bearings
- Sealed for life
- NEMA C-face with coupling

Reductions	Sizes	Ratio Range
Single	5	5.00 :1 – 100:1
Double (helical + worm)	4	50.00:1 – 1000:1
Double Worm	4	150.00:1 – 3000:1

Motors (Section G) and Brakemotors (Section H)

Features

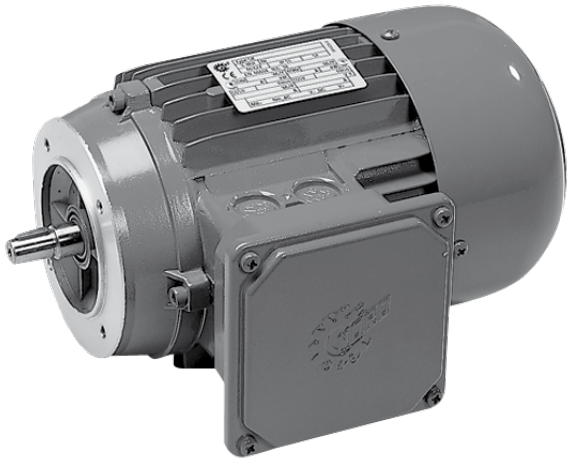

- 1/6 to 200 hp
- Integral brakes
- Inverter/Vector duty
- Standard or energy-efficient designs
- NEMA C-face 56C-215TC
- IEC foot and flange mount
- Long service life
- High start-stop capacity
- Low rotor inertia
- US/Canadian/International voltages and frequencies
- , and approved for worldwide operation

PRODUCT OVERVIEW

Send Quote Requests to info@automatedpt.com
Call +1(800)985-6929 To Order or Order Online At Nordgearmotors.com

Send Quote Requests to info@automatedpt.com
Call +1(800)985-6929 To Order or Order Online At Nordgearmotors.com



TRIO

Features

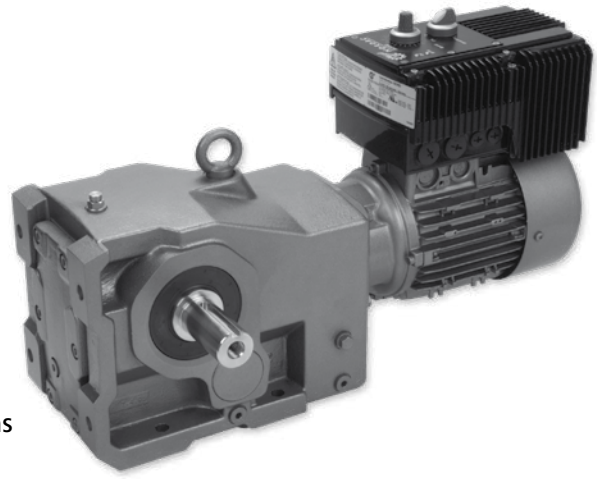

- A speed reducer, integral motor and frequency inverter all fully assembled in one compact package
- SK300E Inverter Models
  - o 200 – 240 VAC 3 Phase 50/60 Hz input ½ through 3 hp
  - o 380 – 480 VAC 3 Phase 50/60 input 3/4 through 5 hp
  - o Full range of built in pre-engineered options
- NORD Inverter/Vector duty motors with full range of options
- UNICASE™ speed reducers with full range of types, ratios and options

HP	Volts	Phases
up to 3	200-240	3
up to 5	380-460	3

SK 500E

Features



- Compact, high performance
- 380-480V, 3-phase to 10 hp
- 200-420V, 3-phase to 5 hp
- 200-420V, 1-phase to 3 hp
- 110-120V, 1-phase to 1.5 hp

SK500E

- ISD – Higher performance sensorless vector control

SK520E

- Closed-loop flux vector control
- Incremental encoder input
- Added I/O
- CAN bus
- Added RS485 via terminals

SK530E

- POSICON - Integrated position control

HP	Volts	Phases
up to 1.5	110-120	1
up to 3	200-240	1
up to 5	200-240	3
up to 10	380-480	3

Send Quote Requests to info@automatedpt.com
Call +1(800)985-6929 To Order or Order Online At Nordgearmotors.com

Send Quote Requests to info@automatedpt.com
Call +1(800)985-6929 To Order or Order Online At Nordgearmotors.com

Product Overview

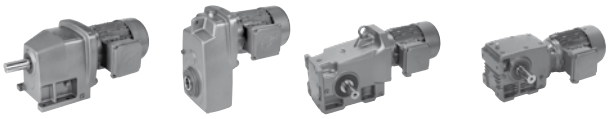

SK 700E

Features

- Flexible, high performance
- 380-460V, 3-phase, to 200 hp
- Selectable control modes
  - o V/f for multiple motors
  - o Sensorless vector control
  - o Flux vector control — (requires optional encoder feedback card)
  - o Position control — (requires optional PosiCan card)
- Modular construction with plug-in options
  - o Technology Units
  - o Customer interface Units
  - o Special Extension Units



HP	Volts	Phases
up to 200	380-460V	3

Vector MC

The NORDAC™ VECTOR MC combines small size with the features and high-performance formerly reserved for more expensive AC Frequency Inverters. Sensorless vector control (ISD) maximizes torque and response at all speeds and extends the useful output frequency range. The many standard features allow direct use in a wide range of applications and plug-in, pre engineered option modules provide additional frequency.



Features

- 1/3 through 3 HP at 230 VAC 1 phase input
- 1 through 3 HP at 460 VAC 3 phase input
- Selectable control modes
  - V/f for multiple motors
  - Sensorless vector control to maximize torque & response
- Programmable standard I/O
  - 1 analog input (selectable 0-10 V or 0/4-20 ma)
  - 4 digital inputs (1 with 1.2 msec response)
  - 1 analog output (0-10 V)
  - 2 relay outputs
  - RS485 interface

HP	Volts	Phases
up to 2	200-230V	1
up to 3	380-460V	3

PRODUCT OVERVIEW

Send Quote Requests to info@automatedpt.com
Call +1(800)985-6929 To Order or Order Online At Nordgearmotors.com

Send Quote Requests to info@automatedpt.com
Call +1(800)985-6929 To Order or Order Online At Nordgearmotors.com



Product Overview

NORDISC™ - Traction Drives(Catalog V4000)

Power: 0.25 – 7.5 hp
Torque: up to 177,000 lb-in

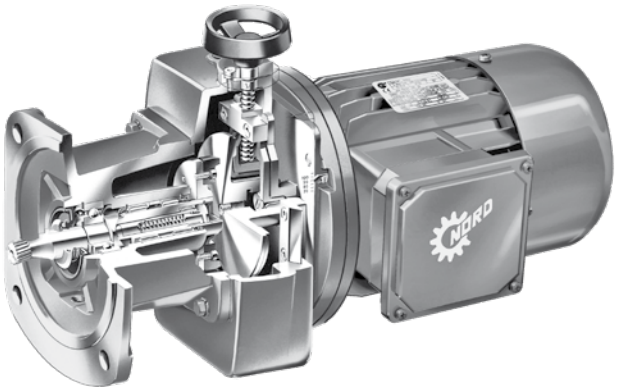

Features

- Available with NORD integral gear unit
- NEMA C-face motor
- 1/4 to 7.5 hp
- 7:1 adjustable speed range
- Constant torque
- Speed-changing handwheel will not vibrate from set position
- Wear-free adjustment mechanism
- Great for bottling and food processing applications

TITAN™ Belt Drives(Catalog G4000)

Power: 0.25 – 150 hp
Torque: up to 442,500 lb-in
Sizes: 11 case sizes

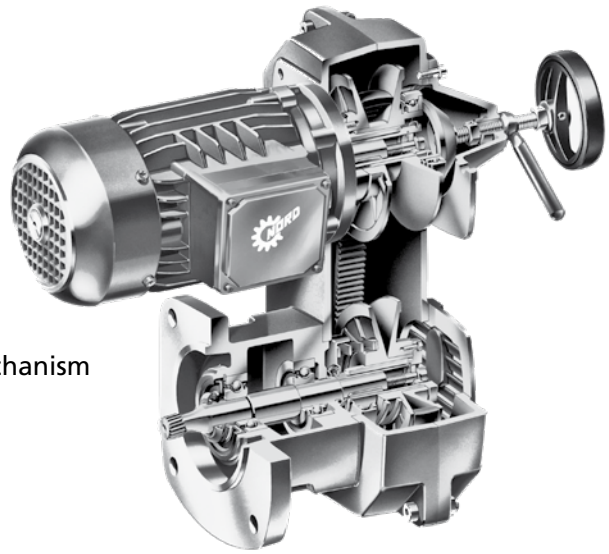

Features

- 1/4 to 150 hp
- 6:1 adjustable speed range
- U-flow or Z-flow configurations available
- Simple handwheel speed adjustment with locking mechanism
- Static conducting belt
- Split belt case for simple maintenance
- Dufondal groove-resistant pulleys

Send Quote Requests to info@automatedpt.com
Call +1(800)985-6929 To Order or Order Online At Nordgearmotors.com

Send Quote Requests to info@automatedpt.com
Call +1(800)985-6929 To Order or Order Online At Nordgearmotors.com

Key Features



UNICASE™ Construction

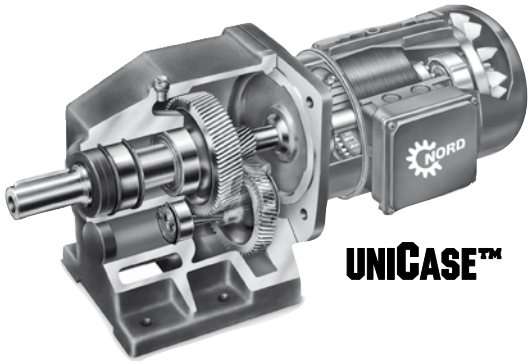

UNICASE™ Construction refers to an overall design concept that allows proper alignment of the gear meshes and the bearings. All of the main drive train components are contained in a one-piece housing. All bearing bores, pilots, and registers of the housing are machined in one set-up. First, the foot or inspection cover is machined. The housing is then positioned from this first cut to machine all remaining features. Specially designed, dedicated fixtures are used to hold the castings rigidly and accurately for machining. This assures positive bearing and gear alignment.

Covers or openings are minimized, reducing the number of potential leak paths, and subsequently the probability of a leak occurring. A standard Failure Effects and Modes Analysis (FEMA) shows that this is the best design. Although this type of design tends to make assembly more difficult, it results in a superior product. Fortunately, NORD has specially designed tools to assure proper, efficient assembly.

All covers and openings are un-stressed access panels, or are positioned with a large pilot diameter. An unstressed access panel is the best, because there are no forces trying to break the seal between the components.

In no case is a bearing bore split even if it is internal to the reducer. Designs with split bearing bores require bolts to hold the bore together. It is common for bearings to fail due the outer face being improperly supported, causing a stress riser at seams in bearing bores.

AUTOVENT ™ Breather

When a gear reducer is operated intermittently, it warms up while operating and cools down after being shut off. The oil expands when it heats up and compresses the air inside the housing, resulting in a positive pressure that could cause the oil seals to rupture if left unregulated. Conversely, when the oil is cooling, it will reduce in volume, and outside air, and potentially humidity and dirt, will enter the reducer. A small concentration of water in mineral oil will cause foaming, will reduce the lubricating properties of the oil, and will promote a rapid degradation of the lubricant's chemistry. Internal components, such as bearings and gears, may quickly be damaged by a small quantity of these contaminants alone or in combination with caustic or corrosive fluids.

The AUTOVENT™ helps prevent bearing and gear damage by behaving like a check valve to block the entry of foreign material and prevent lubrication contamination from dust particles, moisture and airborne process chemicals. The breather opens at approximately 0.3-0.9 psi during operation and closes tightly as the gearbox cools. This option is perfect for humid conditions and wash-down environments, helping to maintain proper oil cleanliness, while reducing foaming and oxidation.

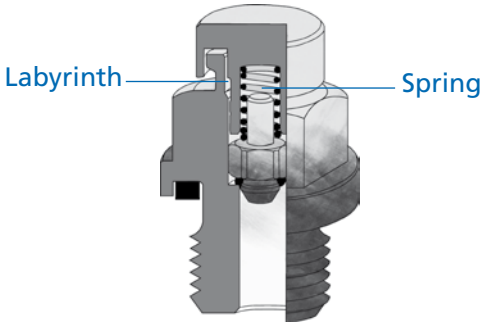

NORD Gear supplies all reducers, except those that are "lubricated for life", with an Autovent™ as a standard feature. In addition, the Autovent™ gives NORD Gear the ability to ship reducers and gear motors with factory-filled lubricant. Since the spring keeps the valve tightly closed regardless of the reducer's orientation, the unit can be inverted during shipment and not develop an oil leak. A metal canopy protects the ball and spring from damage. During operation, oil splash and mist are generated. In contrast to the Autovent™ breather, an open breather can allow these to migrate out, resulting in an undesirable brownish stain around the vent plug.

Send Quote Requests to info@automatedpt.com
Call +1(800)985-6929 To Order or Order Online At Nordgearmotors.com

Send Quote Requests to info@automatedpt.com Call +1(800)985-6929 To Order or Order Online At Nordgearmotors.com

Quadrilip™ Seals

Quadrilip™ seals are standard for most UNICASE™ gear frame sizes. The smaller gear units do not have dual seals, but the quality of shaft preparation and seal installation is universal.

The Quadrilip™ system is a sign of quality. The seal system consists of two sealing lips, a dust lip, and a grease chamber between the seals. The grease chamber functions as an additional barrier: it helps protect the inner seal lip from damage, and helps prevent external contamination from working its way in. The grease also lubricates the seal lips and keeps them soft and flexible, and prevents them from wearing quickly by reducing friction between the seal lip and shaft surface.

All shaft seal surfaces are either roller burnished or plunge ground, and are an important part of the seal system. With these processes a smooth surface finish of 12-24 pinch rms can be achieved without machine lead that causes the seal surface to act as a pump to force oil out from the reducer or gearmotor.

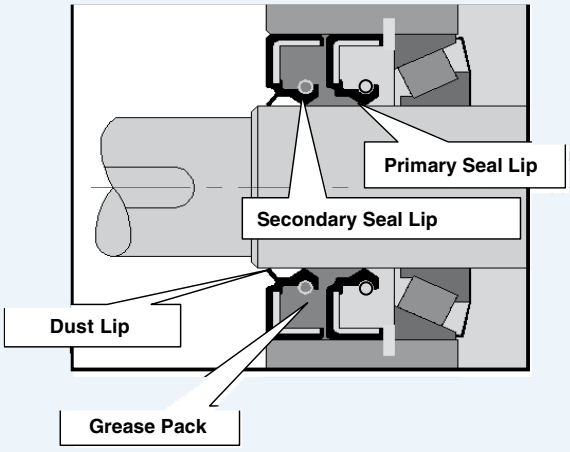

Modular Design

NORD's modular design philosophy provides you with a competitive edge by allowing you to configure drive systems to exactly fit to your applications. More than 20,000,000 combinations of totally unique gearmotors and speed reducers are possible - assembled in-line or right-angle, mounted by foot or flange, featuring solid or hollow shafts with either metric or inch extensions - to give you complete freedom to specify a drive solution that's perfect for you.

Benefits

- More output speeds
- More mounting arrangements/Greater flexibility
- Fewer gear stages/Lower costs
- Metric and inch products

NORD engineers stand ready to assist you with your custom applications. Most standard drives can be modified to your purposes, and custom designs can be developed for special applications.

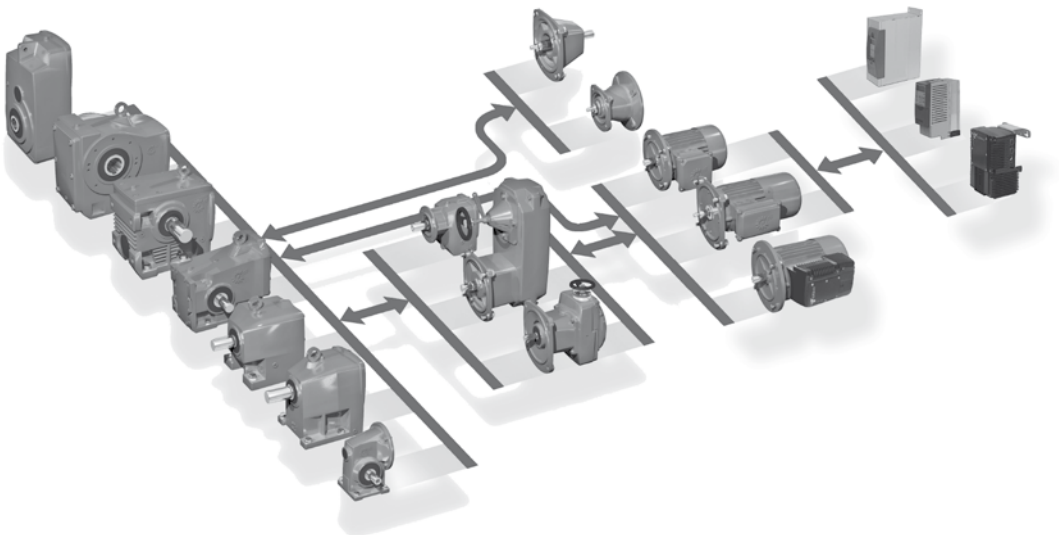

Send Quote Requests to info@automatedpt.com
Call +1(800)985-6929 To Order or Order Online At Nordgearmotors.com

Send Quote Requests to info@automatedpt.com Call +1(800)985-6929 To Order or Order Online At Nordgearmotors.com

Key Features

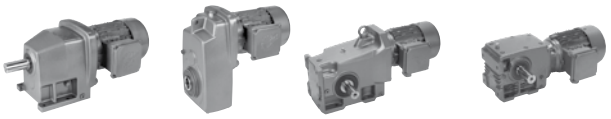

Gearing

The gears are made from high strength steel forgings. The teeth are case-hardened then precision finished using either grinding or skive-hobbing methods. As a result, high tooth-to-tooth accuracy is ensured which delivers steady output motion. Tooth stresses are controlled to assure very long durability with infinite life of the gear teeth. Gear torque ratings are thus optimized for a high degree of reliability.

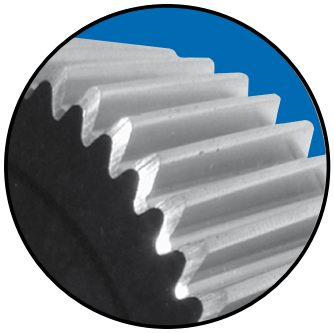

Gear Quality Level: AGMA Class 11-13.

Gear Hardness: Case hardened to 58-62 Rockwell-C.

Gear Finish: All high-speed gears are ground; low-speed gears are skive finished after hardening.

Edge Deburred Gearing.

Designed for infinite life

High-Strength Gearcases

Standard housing material is Class 35 Cast Iron. Some units utilize a corrosion resistant aluminum alloy or diecast aluminum alloy housing material.

NORD's robust housings maintain heavy wall sections. Some competitors have reduced material used in their housings for cost savings. Material has been reduced to the point that the walls are too thin and can flex under load. This will misalign the gears and bearings. In addition, bearing outer races need to be supported with a stiff backing to achieve their rating. Thin housings may not properly support the outer bearing races. Housings are internally painted with a primer to seal casting process residue and fill any surface imperfections.

Lubrication

NORD Gear supplies most all gear units factory-filled with the appropriate oil lubrication type and fill-level per the specified reducer mounting position. The current exceptions include Clincher™ Series parallel-shaft gear units: SK10282, SK10382, SK11282, SK11382, SK12382, and SK9096.1 which are supplied without oil.

It is important that proper oils are used in a gear reducer. By supplying the appropriate lubricant type and amount, NORD Gear eliminates the "guess work" for the consumer.

Properly selected oil will have the required additives to prevent the unwanted formation of foam, oxidation, and rust. As well, the proper extreme pressure additive may be used for hardened alloy steels, or more importantly, not used when it will be a detriment to the bronze gearing in worm reducers. For additional technical information please reference the Lubrication section of this catalog beginning on page 36.

Please see the lubrication table on page 42 for the standard and optional reducer lubrication types, and their service temperature ranges.

High-Performance Motors & Brakemotors

NORD motors are designed to run cool for longer service life. Low rotor inertia and high starting torque allow peak performance in the most difficult applications for inverter and vector duty per NEMA MG 1-2006 Section 31.4.4.2 voltage spikes. Our motors are internationally accepted, conforming to North American NEMA MG 1 and international IEC electrical specifications. High performance options include brakes, encoders, and forced cooling fans.

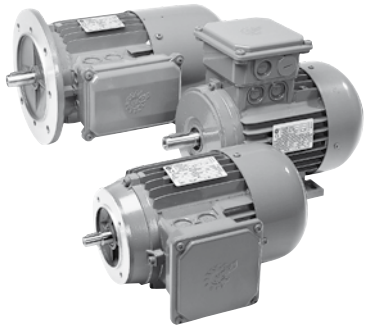

Send Quote Requests to info@automatedpt.com
Call +1(800)985-6929 To Order or Order Online At Nordgearmotors.com

Send Quote Requests to info@automatedpt.com Call +1(800)985-6929 To Order or Order Online At Nordgearmotors.com

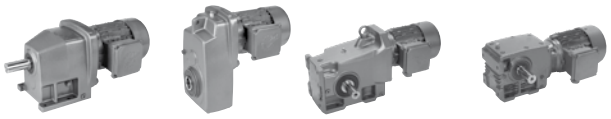

Key Features

Compact Coupled (NEMA C-face Input)

NORD Gear supplies reducers with special couplings that eliminate the need for quill-type input with NEMA and IEC frame motors. This allows for superior input shaft alignment and smooth torque transfer, reducing incidents of bearing, shaft, and key failures. Smaller reducers use a proprietary one piece nylon, curved tooth gear coupling with a bronze insert. These materials were selected for their ability to accommodate misalignment, as well as corrosion protection. The bronze insert eliminates steel-to-steel contact allowing ease of motor disassembly even after years of service. Quill-type inputs have steel-to-steel contact between the motor shaft and the quill-input shaft of the reducer. This metal-to-metal contact will undergo fretting corrosion, especially in corrosive or moist environments. Each reducer is shipped from the factory with a sticker on the coupling that shows the proper coupling placement from the motor mounting surface.



Energy Efficient

Combining the UNICASE™ close dimension control and torsionally stiff, stable housings with high quality gearing results in higher operating efficiencies. Our industry leading 98.5% efficiency per gear stage results in significant power savings over the long haul.

Lowering your operating costs is one of our greatest goals! NORD research and development focuses on energy efficiency, with gearboxes, motors, and frequency inverters designed for lower energy consumption. Our fully diverse line of in-line or right-angle units and motors has been developed to suit your needs.

Stainless Steel Paint

NORD stainless steel paint is a plural component, aliphatic polyurethane paint with 316 stainless steel flakes with outstanding physical properties and excellent appearance. This paint has excellent adhesion to cast iron, steel, aluminum and most plastics and can be used as a topcoat or as a primer. The NORD stainless steel paint also has outstanding exterior durability and corrosion resistance, and superior chemical resistance when exposed to most industrial solvents, lubricants and cutting oils. The NORD stainless steel paint is excellent for both indoor and outdoor duty and is non-flammable.

It is designed as a USDA incidental contact coating acceptable for use in food, drug and cosmetic industries. Incidental contact means that the paint may not contain antimony: arsenic, cadmium, lead, mercury, selenium or other materials such as carcinogens, mutagens, or teratogens classified as hazardous substances.

Recapping NORD Stainless Steel Paint Features:

- Solvent based polyurethane paint for increased durability
- Outstanding exterior durability & corrosion resistance
- Superior chemical resistance when exposed to industrial solvents (laquer thinner, acetone, gasoline, Xylol), lubricants, and cutting oils
- Cured coating develops 2H hardness, yet exhibits excellent high impact resistance
- Heat and humidity resistant (tested for 500 hours at 100% humidity and 100ºF)
- USDA/H1 compliant - incidental contact
- Colors – Stainless steel gray, white, blue, red, black, and orange

Send Quote Requests to info@automatedpt.com
Call +1(800)985-6929 To Order or Order Online At Nordgearmotors.com

Send Quote Requests to info@automatedpt.com
Call +1(800)985-6929 To Order or Order Online At Nordgearmotors.com

Notes



NORD DRIVESYSTEMS

NOTES

Send Quote Requests to info@automatedpt.com
Call +1(800)985-6929 To Order or Order Online At Nordgearmotors.com

NORD Contacts

Contact Information:

- North America
- Global



NORD DRIVESYSTEMS

www.nord.com



International Contacts - North America

United States

NORD Gear Corporation - Midwest Headquarters
800 Nord Drive, P.O. 367
Waunakee, WI 53597

toll free: 1-888-314-6673
phone: 1-608-849-7300
fax: 1-800-373-6673
eMail: info.us@nord.com

NORD Gear Corporation - East
300 E Forsyth Hall Drive
Charlotte, NC 28273

toll free: 1-888-314-6673
phone: 1-608-849-0140
fax: 1-888-259-6673
eMail: info.us@nord.com

NORD Gear Corporation - West
1180 Railroad Street
Corona, CA 92882

toll free: 1-888-314-6673
phone: 1-608-849-0190
fax: 1-888-408-6673
eMail: info.us@nord.com

For Sales office or distributors please contact us or see our website at www.nord.com

Canada

NORD Gear Limited
41 West Drive
Brampton, Ontario L6T 4A1

toll free: 1-800-668-4378
Phone: 1-905-796-3606
fax: 1-905-796-8130
eMail: info.ca@nord.com

Engrenages NORD Limitée
1405 Trans-Canada Hwy.
Suite 245
Dorval, Quebec H9P 2V9

toll free: 1-800-668-4378
phone: 1-514-421-1044
fax: 1-514-421-3973
eMail: info.ca@nord.com

For Sales office or distributors please contact us or see our website at www.nord.com

Mexico

Mexico NORD Drivesystems SA DE CV
Mexico Regional Office
Av. Lázaro Cárdenas 1007 Pte.
San Pedro Garza Garcia, N.L.
México, C.P. 66266

phone: +52-81-8220-9165
fax: +52-81-8220-9044
eMail: info.mx@nord.com

For Sales office or distributors please contact us or see our website at www.nord.com

Send Quote Requests to info@automatedpt.com
Call +1(800)985-6929 To Order or Order Online At Nordgearmotors.com

Send Quote Requests to info@automatedpt.com Call +1(800)985-6929 To Order or Order Online At Nordgearmotors.com

International Contacts

Global
Getriebebau NORD GmbH & Co. KG,
Getriebebau-Nord-Str. 1
D-22941 Bargteheide
Phone: +49-4532-401-0 Fax: +49-4532-401-253
Email: info@nord-de.com

Afghanistan
Getriebebau NORD GmbH & Co. KG,
Getriebebau-Nord-Str. 1
D-22941 Bargteheide
Phone: +49-4532-401-0 Fax: +49-4532-401-253
Email: info@af.nord.com

Algeria
Tunesia S.I.A. Ben Djemaa & CIE
220 Avenue des Martyrs
TN - 3000 Sfax
Phone: +216-74-408 446 Fax: +216-74-408 065
Email: bendjemaa@planet.tn

Algeria
EURL Agence Maghrebine Des Echanges Commerciaux
35 Avenue 5 Juillet
Borj El Kiffane
Phone: +213-76-288837 Fax: +213-21-201209
Email: bendjemaa@planet.tn

Angola
Power Drives a division of Bearing Man Ltd.
Bearing Man Park, Droste Cresent
Droste Park Ext. 7, Johannesburg 2001
P.O. Box 33431
Jeppestown 2043, South Africa
Phone: +27-11-620 1500 Fax: +27-11-620 1670
Email: powerdrives@bearingman.co.za

Argentina
Chilicote S.A.
Avda. Julio A. Roca 546
1067 Buenos Aires
Phone: +54-11-4343 8469 Fax: +54-11-4331 4278
Email: chilicote@chilicote.com.ar

Armenia
Getriebebau NORD GmbH & Co. KG,
Getriebebau-Nord-Str. 1
D-22941 Bargteheide
Phone: +49-4532-401-0 Fax: +49-4532-401-253
Email: info@nord-de.com

Australia
CMG Pty Ltd.
19 Corporate Avenue
Rowville, VIC 3178
PO Box 2340, Rowville, VIC 3178 - Australia
Phone: +61-3-9237 4000 Fax: +61-3-9237 4010
Email: mark.alexander@cmggroup.com.au

Austria
Getriebebau NORD GmbH
Deggendorfstraße 8
A-4030 Linz
Phone: +43-732-31 89 20 Fax: +43-732-31 89 20-85
Email: info@nord-at.com

Bahrain
Eight Industries
P.O. Box 32095
Dubai/U.A.E.
Phone: +971-4-3200 770 Fax: +971-4-3200 771
Email: eight@emirates.net.ae

Bangladesh
Getriebebau NORD GmbH & Co. KG,
Getriebebau-Nord-Str. 1
D-22941 Bargteheide
Phone: +49-4532-401-0 Fax: +49-4532-401-253
Email: info@bd.nord.com

Belarus
OOO NORD PRIVODY
P.O. 51
BY-220121 Minsk
Phone: +375-17-205 04 27 Fax: +375-17-205 04 27
Email: info@by.nord.com

Belgium
NORD Aandrijvingen België N.V.
NORD Transmission Belgique S.A.
Boutersemdreef 24
B-2240 Zandhoven
Phone: +32-3-484 59 21 Fax: +32-3-484 59 24
Email: info@nord-be.com

Bhutan
Getriebebau NORD GmbH & Co. KG,
Getriebebau-Nord-Str. 1
D-22941 Bargteheide
Phone: +49-4532-401-0 Fax: +49-4532-401-253
Email: info@bt.nord.com

Bolivia
Variadores S.A.
Carrera 50 (Aut. Sur)
No. 2 Sur 271 - A.A. 053811
Medellin, Columbia
Phone: +57-94-2552200 Fax: +57-94-2557450
Email: variadores@variadores.com.co

Brazil
NORD Motoredutores do Brasil Ltda
Rua Dr. Moacyr Antonio de Morais, 700
Parque Santo Agostinho
Guarulhos – São Paulo
CEP 07140-285
Phone: +55-11-6402 8855 Fax: +55-11-6402 8830
Email: info@nord-br.com

Send Quote Requests to info@automatedpt.com
Call +1(800)985-6929 To Order or Order Online At Nordgearmotors.com

Send Quote Requests to info@automatedpt.com Call +1(800)985-6929 To Order or Order Online At Nordgearmotors.com

International Contacts

Bulgaria
MELSICON Ltd.
P.Wolov 47-49
BG-1504 SOFIA
Phone: +359-2-9434150 Fax: +359-2-9434160
Email: melsicon@applet-bg.com

Burundi
Power Drives a division of Bearing Man Ltd.
Bearing Man Park, Droste Cresent
Droste Park Ext. 7, Johannesburg 2001
P.O. Box 33431 Jeppestown 2043
South Africa
Phone: +27-11-620 1500 Fax: +27-11-620 1670
Email: daver@bearingman.co.za

Cameroon
Getriebebau NORD GmbH & Co. KG,
Getriebebau-Nord-Str. 1
D-22941 Bargteheide
Phone: +49-4532-401-0 Fax: +49-4532-401-253
Email: export2@nord-de.com

Canada
NORD Gear Limited
41 West Drive
Brampton, Ontario L6T 4A1
Phone: (905) 796-3606 Fax: (905) 796-8130
Email: info.ca@nord.com

Chile
TDC Techno Drive Center S.A.
Los Leones No. 133-2° Piso
Providencia Santiago de Chile
Chile
Phone: +56-2-234 0084 Fax: +56-2-334 9633
Email: tdc@technodrive.cl

China
NORD (Beijing)
Power Transmission Co. Ltd.
No. 5, Tangjiacun,
Guangqudonglu, Chaoyangqu
Beijing 100022
Phone: +86-10-67704305 Fax: +86-10-67704330
Email: info@nord-cn.com

China
NORD (Suzhou)
Power Transmission Co. Ltd.
No.510 Changyang Street
Suzhou Ind. Park
Jiangsu 215021
Phone: +86-512-85180277 Fax: +86-512-85180278
Email: info@nord-cn.com

Colombia
Variadores S.A.
Carrera 50 (Aut. Sur)
No. 2 Sur 271 - A.A. 053811
Medellin
Phone: +57-4-2552200 Fax: +57-4-2557450
Email: variadores@variadores.com.co

Costa Rica
Variadores S.A.
Carrera 50 (Aut. Sur)
No. 2 Sur 271 - A.A. 053811
Medellin, Columbia
Phone: +57-94-2552200 Fax: +57-94-2557450
Email: variadores@variadores.com.co

Croatia
NORD-Pogoni d.o.o
Obrtnicka 9
HR-48260 Krizevci
Phone: +385-48-711 900 Fax: +385-48-270 494
Email: info@nord-hr.com

Cyprus
Getriebebau NORD GmbH & Co. KG,
Getriebebau-Nord-Str. 1
D-22941 Bargteheide
Phone: +49-4532-401-0 Fax: +49-4532-401-253
Email: export2@nord-de.com

Czech Republic
NORD-Poháněcí technika, s. r. o.
Palackého 359
500 03 Hradec Králové
Phone: +420 495 580 310 Fax: +420 495 580 312
Email: HZubr@nord-cz.com

Dem. Rep. Congo
Power Drives a division of Bearing Man Ltd.
Bearing Man Park, Droste Cresent
Droste Park Ext. 7, Johannesburg 2001
P.O. Box 33431 Jeppestown 2043, South Africa
Phone: +27-11-620 1500 Fax: +27-11-620 1670
Email: daver@bearingman.co.za

Denmark
NORD-Gear Danmark A/S
Kliplev Erhvervspark 28 - Kliplev
DK - 6200 Aabenraa
Phone: +45 73 68 78 00 Fax: +45 73 68 78 10
Email: info@nord-dk.com

Ecuador
Variadores S.A.
Carrera 50 (Aut. Sur)
No. 2 Sur 271 - A.A. 053811
Medellin, Columbia
Phone: +57-94-2552200 Fax: +57-94-2557450
Email: variadores@variadores.com.co

Send Quote Requests to info@automatedpt.com
Call +1(800)985-6929 To Order or Order Online At Nordgearmotors.com

Send Quote Requests to info@automatedpt.com Call +1(800)985-6929 To Order or Order Online At Nordgearmotors.com

Egypt
IED-International Engineering Development
4 Abu Gafar El Nahas Street
El Golf, Heliopolis
Cairo
Phone: +20-2-2900475 Fax: +20-2-4185637
Email: ied@thewayout.net

El Salvador
Maquinaria E Insumos Industriales, S.A.
67 Av Sur Edificio #144 Local #3,.
Col Escalon
San Salvador, C.A
Phone: +503-22243059 Fax: +503-22246272
Email: maquinsa@integra.com.sv

Estonia
Technobalt Eesti Ltd.
Läike tee 10
Peetri küla, Rae vald
EE-75301 Harjumaa
Phone: +372-6-684 400 Fax: +372-6-613 165
Email: info@technobalt.ee

Finland
NORD Gear Oy
Aunankorvenkatu 7
FI - 33840 Tampere
Phone: +358-3-254 1800 Fax: +358-3-254 1820
Email: info@nord-fi.com

France
NORD Réducteurs
Bureaux commerciaux
17, Av. Georges Clémenceau
FR-93421 Villepinte Cedex
Phone: +33-1-4963 0189 Fax: +33-1-4963 0811
Email: info@nord-fr.com

Germany
Getriebebau NORD GmbH & Co. KG,
Getriebebau-Nord-Str. 1
D-22941 Bargteheide
Phone: +49-4532-401-0 Fax: +49-4532-401-253
Email: info@nord-de.com

Ghana
Getriebebau NORD GmbH & Co. KG
Getriebebau-Nord-Str. 1
22941 Bargteheide / Hamburg Germany
Phone: +49-4532-4010 Fax: +49-4532-401254
Email: export2@nord-de.com

Greece
Mangrinox S.A.
14 Grevenon Str.
Votanikos
GR-11855 Athens
Phone: +30-210-3423201-3 Fax: +30-210-3459767, 3459928
Email: magrinox@mail.otenet.gr

Guatemala
Maquinaria E Insumos Industriales, S.A.
19 Avenida 16-56 Zona 10
Empresarial Santa Fe Bodega 4
Guatemala 01010
Phone: +502-23674490 Fax: +502-23674493
Email: maquinsa@inteinet.net.gt

Guinea
Getriebebau NORD GmbH & Co. KG
Getriebebau-Nord-Str. 1
22941 Bargteheide / Hamburg Germany
Phone: +49-4532-4010 Fax: +49-4532-401254
Email: export2@nord-de.com

Hungary
NORD Hajtastechnika Kft.
Törökkö u. 5-7
HU-1037 Budapest
Phone: +36 1 437 0127 Fax: +36 1 250 5549
Email: info@nord-hu.com

Iceland
Varmaverk Ltd.
Dalshrauni 5
IS-220 Hafnarfiroei
Phone: +354-5651750 Fax: +354-5651951
Email: pall@varmaverk.is

India
NORD Drivesystems Pvt. Ltd.
282/ 2, 283/2, Plot No. 15
Mauje, Village Mann
Tal Mulshi, Adj. Hinjewadi Phase- II
Pune Maharashtra 411 057
Phone: +91-20-39801200 Fax: +91-20-39801216
Email: info@nord-in.com

Indonesia
PT. NORD Indonesia
Jln. Raya Serpong KM7,
Kompleks Rumah Multi Guna Blok D-No. 1
Pakulonan, Serpong 15310 - Tangerang
West Java
Phone: +62-21-5312 2222 Fax: +62-21-5312 2288
Email: info@nord-id.com

Send Quote Requests to info@automatedpt.com
Call +1(800)985-6929 To Order or Order Online At Nordgearmotors.com

Send Quote Requests to info@automatedpt.com Call +1(800)985-6929 To Order or Order Online At Nordgearmotors.com

International Contacts

Iran
Paralog Engineering Co. Ltd.
P.O.Box 19395-7366
No. 6, Shangarf Street
Mirdamad Blvd.
Tehran 15489
Phone: +98-21-22905551 / -2 Fax: +98-21-22905550
Email: nord@Paralog.ir

Ireland
NORD Gear Limited (UK)
11 Barton Lane, Abingdon Science Park,
Abingdon,
Oxfordshire OX14 3NB
Phone: +353(0) 87 69 -48 7 11 Fax: +353 (0) 49 85 - 43 7 34
Email: pfinnegan@nord-ie.com

Israel
Ringel Bros. Ltd
Hertzel St. 134
5148 Tel-Aviv
Phone: +972-3-6824027 Fax: +972-3-6822041
Email: mringel@netvision.net.il

Italy
NORD-Motoriduttori s.r.l.
Via Newton 22
IT-40017 San Giovanni in Persiceto (BO)
Phone: +39-051-6870 711 Fax: +39-051-6870 793
Email: info@nord-it.com

Ivory Coast
Getriebebau NORD GmbH & Co. KG,
Getriebebau-Nord-Str. 1
D-22941 Bargteheide
Phone: +49-4532-401-0 Fax: +49-4532-401-253
Email: export2@nord-de.com

Jordan
Arab Co. For Power Transmissions Technology
"GearTech Co"
P.O Box 830641
Amman 11183
Phone: +962-6-5692283 Fax: +962-6-5656750
Email: indgroup@wanadoo.jo

Kazakhstan
NORD Privody KZ
Chaykovski str.,
h.131, of.12. KZ - Almaty, 050 000
Phone: +7-3272-61 02 99 Fax: +7-3272-61 02 99
Email: info@kz.nord.com

Kenya
Jos. Hansen & Soehne (East Africa) Ltd.
Baba Dogo Road, Ruaraka
P.O.Box 30196
Nairobi
Phone: +254-2-861 637 Fax: +254-2-861 640
Email: hansenkenya@swiftkenya.com

Kongo
Power Drives a division of Bearing Man Ltd.
Bearing Man Park, Droste Cresent
Droste Park Ext. 7, Johannesburg 2001
P.O. Box 33431 Jeppestown 2043
South Africa
Phone: +27-11-620 1500 Fax: +27-11-620 1670
Email: powerdrives@bearingman.co.za

Korea
POWERKING GEAR Co.
216-8, No-onsa,
Gwangmyung, Gyunggi, 423-080
Phone: +82-2-2615-6044 Fax: +82-2-2060-7044
Email: sales@pkgear.com

Kuwait
Eight Industries
P.O. Box 32095
Dubai/U.A.E.
Phone: +971-4-3200 770 Fax: +971-4-3200 771
Email: eight@emirates.net.ae

Kyrgyzstan
Getriebebau NORD GmbH & Co. KG,
Getriebebau-Nord-Str. 1
D-22941 Bargteheide
Phone: +49-4532-401-0 Fax: +49-4532-401-253
Email: info@nord-de.com

Latvia
SIA Technobalt
Skaistkalnes 1
Riga LV - 1004
Phone: +371-7605 046 Fax: +371-7605 062
Email: technobalt@technobalt.lv

Lebanon
Hosny Homany
P.O. Box 102
Ghobery, Beirut
Phone: +961 5 480661/2 Fax: +961 5 480660
Email: hhomany@cyberia.net.lb

Liberia
Getriebebau NORD GmbH & Co. KG,
Getriebebau-Nord-Str. 1
D-22941 Bargteheide
Phone: +49-4532-401-0 Fax: +49-4532-401-253
Email: export2@nord-de.com

Send Quote Requests to info@automatedpt.com
Call +1(800)985-6929 To Order or Order Online At Nordgearmotors.com

Send Quote Requests to info@automatedpt.com Call +1(800)985-6929 To Order or Order Online At Nordgearmotors.com

Lithuania
Technobalt Group
UAB Technobalta
Titnago g.10
LT-02300 Vilnius
Phone: +370-5-260 2503 Fax: +370-5-2653288
Email: lietuva@technobalt.com

Malaysia
GTM Sdn Bhd
No. 19, Jalan Tambur 33/19,
Shah Alam Technology Park, Section 33,
40400, Shah Alam,
Selangor Darul Ehsan
Phone: +60-3-51 24 67 73 Fax: +60-3-51 24 68 10
Email: jenny.multidrive@gmail.com

Marocco
Societe Marocaine des Etablissements Moulin
14 Rue Allal Ben Ahmed AMKIK et 7,
Rue Saint Saens
Belvédère - Casablanca
Phone: +212-22-406777 Fax: +212-22-406782
Email: etsmoulin@wanadoo.net.ma

Mauritius
Power Drives a division of Bearing Man Ltd.
Bearing Man Park, Droste Cresent
Droste Park Ext. 7, Johannesburg 2001
P.O. Box 33431
Jeppestown 2043
South Africa
Phone: +27-11-620 1500 Fax: +27-11-620 1670
Email: powerdrives@bearingman.co.za

Mexico
NORD DRIVE SYSTEMS SA DE CV
Av. Lázaro Cárdenas 1007 Pte.
San Pedro Garza Garcia, N.L.
México, C.P. 66266
Phone: +52-81-8220-9165 Fax: +52-81-8220-9044
Email: info.mx@nord.com

Namibia
Power Drives a division of Bearing Man Ltd.
Bearing Man Park, Droste Cresent
Droste Park Ext. 7, Johannesburg 2001
P.O. Box 33431
Jeppestown 2043
South Africa
Phone: +27-11-620 1500 Fax: +27-11-620 1670
Email: powerdrives@bearingman.co.za

Nepal
Getriebebau NORD GmbH & Co. KG,
Getriebebau-Nord-Str. 1
D-22941 Bargteheide
Phone: +49-4532-401-0 Fax: +49-4532-401-253
Email: info@np.nord.com

Netherlands
NORD Aandrijvingen Nederland B.V.
Voltstraat 12
NL-2181 HA Hillegom
P.O.Box 136
NL-2180 AC Hillegom
Phone: +31-252 529544 Fax: +31-252 522222
Email: info@nord-nl.com

New Zealand
CMG Electric Motors (NZ) Limited
2 Ross Reid Avenue
East Tamaki, Auckland
Phone: +64-9-273 9162 Fax: +64-9-273 9062
Email: Mark.Alexander@cmggroup.com.au

Nigeria
Jos. Hansen & Soehne (Nigeria) Ltd.
km 16, Ikorodu Road (near Bata)
Ojota
Lagos
Phone: +234-1-4974 304 Fax: +234-1-4976 936
Email: joshansen@linkserve.com

Norway
NORD GEAR NORGE A/S
Solgaard Skog 7,
PB85
N-1501 Moss
Phone: +47-69 20 69 90 Fax: +47-69 20 69 93
Email: MHansen@nord-no.com

Oman
Eight Industries
P.O. Box 32095
Dubai/U.A.E.
Phone: +971-4-3200 770 Fax: +971-4-3200 771
Email: eight@emirates.net.ae

Pakistan
OTC
Flat # 3, 89B/C-II,
Gulberg-III
Lahore 54660
Phone: +92-42-587 2667-9 Fax: +92-42-587 2670
Email: sajjad@otc.com.pk

Panama
Variadores S.A.
Carrera 50 (Aut. Sur)
No. 2 Sur 271 - A.A. 053811
Medellin, Columbia
Phone: +57-94-2552200 Fax: +57-94-2557450
Email: variadores@variadores.com.co

Send Quote Requests to info@automatedpt.com
Call +1(800)985-6929 To Order or Order Online At Nordgearmotors.com

Send Quote Requests to info@automatedpt.com Call +1(800)985-6929 To Order or Order Online At Nordgearmotors.com

International Contacts

Peru
Delcrosa S.A.
Av. Argentina 1515
Lima
Phone: +51-1-336 6614 Fax: +51-1-336 8189
Email: viviana@delcrosa.com.pe

Philippines
Mheco Mechanical Handling Equipment Company Inc
Suite 812 Herrera Tower,
Herrera cor. Valero Sts.
Salcedo Village, Makati City
P.O.Box 1004
Makati 1250
Phone: +63-2-844 8901-05 Fax: +63-2-845 1535
Email: mheco@skyinet.net

Poland
NORD Napedy sp. z o.o.
Ul. Grottgera 30
PL-32-020 Wieliczka
S d Rejonowy dla Krakowa Zródmiescia
NIP: 683-17-20-355
Kapital ZakBadowy 770 000, 00 PLN
Phone: +48-0122889900 Fax: +48-0122889911
Email: biuro@nord-pl.com

Portugal
NORD Motorreductores
Apdo de Correos 166,
ES-08200 Sabadell - Spain
Phone: +34-93-723 5322 Fax: +34-93-723 3147
Email: info@nord-es.com

Qatar
Eight Industries
P.O. Box 32095
Dubai/U.A.E.
Phone: +971-4-3200 770 Fax: +971-4-3200 771
Email: eight@emirates.net.ae

Romania
S.C.NORD Drivesystems S.R.L.
Str.Nicolae Iorga,Nr.55/3
RO-550387 SIBIU
Phone: +40/269/232880 Fax: +40/269/232880
Email: UPiringer@ro.nord.com

Russian Federation
OOO NORD PRIVODY
Ul. A. Nevsky 9
RU-191167 St.Petersburg
Phone: +7-812-327 0192 Fax: +7-812-327 0192
Email: info@nord-ru.com

Rwanda
Power Drives a division of Bearing Man Ltd.
Bearing Man Park, Droste Cresent
Droste Park Ext. 7, Johannesburg 2001
P.O. Box 33431 Jeppestown 2043
South Africa
Phone: +27-11-620 1500 Fax: +27-11-620 1670
Email: powerdrives@bearingman.co.za

Saudi Arabia
Al-Musairiey Industrial Equipment. Co.
P.O. Box 40966
Riyadh - 11511
Phone: +966-1-448 3808 Fax: +966-1-446 9244
Email: info@almusairiey.com

Senegal
Getriebebau NORD GmbH & Co. KG
Getriebebau-Nord-Str. 1
D-22941 Bargteheide
Phone: +49-4532-401-0 Fax: +49-4532-401-253
Email: export2@nord-de.com

Singapore
NORD GEAR Pte Ltd
33 Kian Teck Drive
Jurong, Singapore 628850
Phone: +65-6265-9118 Fax: +65-6265-6841
Email: info@nord-sg.com

Slovakia
NORD Pohony, s.r.o.
Juzná Trieda 74
SK - 04001 Kosice
Phone: +421-55-729 9600 Fax: +421-55-729 9599
Email: Info@nord-sk.com

Slovenia
Getriebebau NORD GmbH
Deggendorfstraße 8
A-4030 Linz
Phone: +43-732-31 89 20 Fax: +43-732-31 89 20-85
Email: info@nord-at.com

South Africa
Power Drives a division of Bearing Man Ltd.
6 Tetford Circle,
Millennium Bridge Business Park,
La Lucia Ridge 4320 (Durban)
P.O. Box 25191, Gateway 4321 (Durban)
Phone: +27-11-62 01 61 3 Fax: +27-11-62 01 67 0
Email: powerdrives@bearingman.co.za

Send Quote Requests to info@automatedpt.com
Call +1(800)985-6929 To Order or Order Online At Nordgearmotors.com

Send Quote Requests to info@automatedpt.com Call +1(800)985-6929 To Order or Order Online At Nordgearmotors.com

Spain
NORD Motorreductores S.A.
Aptdo de Correos 166
ES - 08200 Sabadell
Phone: +34-93-723 5322 Fax: +34-93-723 3147
Email: info@nord-es.com

Sri Lanka
Getriebebau NORD GmbH & Co. KG,
Getriebebau-Nord-Str. 1
D-22941 Bargteheide
Phone: +49-4532-401-0 Fax: +49-4532-401-253
Email: info@lk.nord.com

Sweden
NORD Drivsystem AB
Box 2097
Ryttargatan 277
SE-194 02 Upplands Väsby
Phone: +46-8-594 114 00 Fax: +46-8-594 114 14
Email: info@nord-se.com

Switzerland
Getriebebau NORD AG
Bächigenstr.18
CH-9212 Arnegg
Phone: +41-71-38899 11 Fax: +41-71-38899 15
Email: info@nord-ch.com

Syria
Elias Brothers Co.
Al' Kowatly St. 2
P.O. Box 4282
Homs
Phone: +963-31-2771 004 Fax: +963-31-2771 003
Email: eliasbrothersco@mail.sy

Taiwan
TACT Trans-Asia Consulting & Trade Co., Ltd.
1F, No. 157-1, Sec. 1, Beisin Road.,
Sindian City,
Taipei County 231, Taiwan R.O.C.
Phone: + 886-2-29188768 Fax: + 886-2-29185985
Email: TACT@trans-asia.com.tw

Tanzania
Jos. Hansen & Soehne (Tanzania) Ltd.
Holland House, Ohio Street
P.O.Box 9521
Dar es Salaam
Phone: +255-22-211 5746 Fax: +255-22-211 2948
Email: jhs-t@africaonline.co.tz

Thailand
Charoen Muang Machinery Co. Ltd.
164/1 Wisutkasat Rd.
Banpanthom, Pranakorn
Bangkok 10200
Phone: +66-2-281 5331 Fax: +66-2-280 8033-4
Email: info@nord-sg.com

Tunisia
Tunesia S.I.A. Ben Djemaa & CIE
220 Avenue des Martyrs
TN - 3000 Sfax
Phone: +216-74-408 446 Fax: +216-74-408 065
Email: bendjemaa@planet.tn

Turkey
NORD-REMAS
Redüktör Sanayi ve
Ticaret Ltd. Sti.
Tepeören Köyü
34959 - Tuzla - Istanbul
Phone: +90-216-304 13 60 Fax: +90-216-304 13 69
Email: info@nord-tr.com

Uganda
Jos. Hansen & Soehne (Uganda) Ltd.
Workers House Plot 1
Pilkington Road
P.O.Box 2333
Kampala
Phone: +256-41-251 324 Fax: +256-41-251 325
Email: hansenuganda@africaonline.co.ug

Ukraine
GETRIEBEBAU NORD GmbH
Vasilkovskaja, 1
office 306
03040 KIEW
Phone: + 380-44-537 0615 Fax: + 380-44-537 0615
Email: vtsoka@nord-ukr.com

United Arab Emirates
Eight Industries
P.O. Box 32095
Dubai/U.A.E.
Phone: +971-4-3200 770 Fax: +971-4-3200 771
Email: eight@emirates.net.ae

United Kingdom
NORD Gear Limited (UK)
11 Barton Lane, Abingdon Science Park,
Abingdon,
Oxfordshire OX14 3NB
Phone: +44-1235-534404 Fax: +44-1235-534414
Email: info@nord-uk.com

Send Quote Requests to info@automatedpt.com
Call +1(800)985-6929 To Order or Order Online At Nordgearmotors.com

International Contacts

DRIVESYSTEMS

United States - Midwest
NORD Gear Corporation
800 Nord Drive, P.O. 367
Waunakee, WI 53597
Phone: 1-888-314-6673 Fax: 1-800-373-6673
Phone: 1-608-849-7300
Email: info.us@nord.com

United States - West
NORD Gear Corporation
1137 W. Bradford Circle
Corona, CA 92882
Toll free: 1-888-314-6673 Fax: 1-888-408-6673
Phone: 1-608-849-0190
Email: info.us@nord.com

United States - East
NORD Gear Corporation
100 Forsyth Hall Drive
Building 100B
Charlotte, NC 28273
Toll free: 1-888-314-6673 Fax: 1-888-259-6673
Phone: 1-608-849-0140
Email: info.us@nord.com

Uzbekistan
Getriebebau NORD GmbH & Co. KG,
Getriebebau-Nord-Str. 1
D-22941 Bargteheide
Phone: +49-4532-401-0 Fax: +49-4532-401-253
Email: info@nord-de.com

Venezuela
Getriebebau NORD GmbH & Co. KG,
Getriebebau-Nord-Str. 1
D-22941 Bargteheide
Phone: +49-4532-401-0 Fax: +49-4532-401-253
Email: info@nord-de.com

Vietnam
NORD Gear Pte. Ltd
Representative office
Unit 401, 4F, An Dinh Building,
18 Nam Quoc Cang Street
Pham Ngu Lao Ward
District 1, Ho Chi Minh City, Vietnam
Phone: +84 8 925 7270 Fax: +84 8 925 7271
Email: info@vn.nord.com

Zambia
PROVIDENT INVESTMENT Ltd
Mr.Y.M.Mulambya
1st. Floor - Angoni House
Obote Avenenue
Kitwe
Phone: +260-2-22 60 84 Fax: +260-2-22 67 10
Email: provident@zamtel.zm

Zimbabwe
Power Drives a division of Bearing Man Ltd.
Bearing Man Park, Droste Cresent
P.O. Box 33431 Jeppestown 2043
South Africa
Phone: +27-11-620 1500 Fax: +27-11-620 1670
Email: powerdrives@bearingman.co.za

Send Quote Requests to info@automatedpt.com
Call +1(800)985-6929 To Order or Order Online At Nordgearmotors.com

Send Quote Requests to info@automatedpt.com
Call +1(800)985-6929 To Order or Order Online At Nordgearmotors.com

Send Quote Requests to info@automatedpt.com
Call +1(800)985-6929 To Order or Order Online At Nordgearmotors.com

Send Quote Requests to info@automatedpt.com Call +1(800)985-6929 To Order or Order Online At Nordgearmotors.com

NORD GEAR CORPORATION

DRIVESYSTEMS — CONDITIONS OF SALE — WWW.NORD.COM

1. CONTRACT

Any contract between Nord Gear Corporation, hereinafter designated as Seller, and the Buyer is subject to the terms and conditions of sale hereinafter set forth. Any deviation from such terms and conditions must be specifically set forth in writing and consented to by Seller. Accordingly, the Buyer and Seller acknowledge and agree that the terms and conditions set forth below and on the face hereof shall govern Buyer's purchase of the goods described on the face hereof and shall take precedence over and represents the final agreement between Buyer and Seller, notwithstanding any inconsistent, contradictory or other prior or further conditions contained in any oral or written request or purchase order issued by Buyer or any other document furnished by Buyer in connection with its purchase of the Goods, regardless of whether such document or documents are exchanged simultaneously with this Invoice or prior or subsequent thereto. Any additional or different terms or conditions which may appear in any communicaiton, oral or written, from Seller, its officers, employees, agents or representatives, are hereby expressly rejected and shall not be effective or binding upon the Seller, unless specifically hereafter agreed to in writing by Seller and no such additional or different terms or conditions in any document submitted to Seller by Buyer shall become part of the contract between Buyer and Seller, unless such written acceptance by Seller specifically recognizes and assents to their inclusion. Any objection by Buyer to the terms and conditions hereof shall be ineffective unless Seller is advised in writing thereof within two (2) days of the date of this Invoice.

2. CONFIRMATION

An order shall be deemed accepted only when duly confirmed by Seller, at Nord Gear Corporation's home office in Waunakee, Wisconsin, and upon such confirmation the order shall become a contract binding upon the parties hereto, their successors and assigns.

3. PRICES

Prices shown are list prices and may be subject to applicable discounts. Unless otherwise agreed upon in writing, prices are FOB factory Waunakee, Wisconsin. Prices and discounts are subject to change without notice until order is accepted. Seller's prices do not include cost of any inspection permits required.

4. LIMITED WARRANTY

Seller hereby warrants that the goods sold hereunder shall be free from material defects in material and workmanship, if properly installed and used under normal operating conditions, for a period of twelve (12) months from the date of installation or eighteen (18) months from date of shipment, whichever comes first (the "Warranty Period"). With respect to gears and housings only, the Warranty Period is extended to thirty-six (36) months from the date of invoice or twenty-four (24) months from the date of installation, whichever comes first. The limited warranty shall not apply to any components or parts which are subject to normal operational wear and tear, including, but not limited to, belts and traction discs. Should any goods fail to comply with the foregoing limited warranty, Buyer shall provide written notice to Seller of the claimed defect and all relevant details within thirty (30) days of Buyer's discovery of the claimed defect. Buyer shall return the allegedly defective goods to Seller at its facilities in Waunakee, Wisconsin or to such other location within the USA as may be designated by Seller in its sole discretion, with all shipping and transportation charges prepaid by Buyer. Seller shall then examine the returned goods to determine if the claimed defect is covered by the limited warranty. If the claimed defect is covered by the limited warranty, Buyer's sole and exclusive remedy shall be to have Seller repair or replace, at Seller's option, the defective goods or components in accordance with the terms of this limited warranty. Seller shall have a commercially reasonable time to make such repairs or replacements and may use new or reconditioned components. Any repair or replacement shall not extend the Warranty Period unless otherwise agreed by Seller. Buyer shall pay all shipping costs and any costs of removal and re-installation of goods or components.

The foregoing limited warranty shall not apply with respect to any goods or components (i) which are not installed, used, operated, serviced or maintained in accordance with manufacturer's instructions or which are otherwise not properly installed, used, operated, serviced or maintained, or (ii) which are misused, neglected, damaged, altered, repaired, reconfigured or incorrectly wired. Seller makes no representations as to the specifications, capacity or performance of the goods sold hereunder, except as may be specifically set forth in the invoice's written specifications, and any such representations are expressly conditioned upon the accuracy and completeness of the data and information furnished by the buyer and upon the goods being properly installed, used, serviced and maintained by Buyer. Any description or model of the goods is for identification or illustrative purposes only and shall not be deemed to create any warranty, express or implied.

THE FOREGOING LIMITED WARRANTY SHALL EXTEND SOLELY TO BUYER AND NOT TO ANY OTHER PARTY. THE FOREGOING LIMITED WARRANTY IS IN LIEU OF ANY AND ALL OTHER WARRANTIES, WHETHER EXPRESS OR IMPLIED. SELLER HEREBY EXCLUDES AND DISCLAIMS ANY AND ALL OTHER WARRANTIES, WHETHER EXPRESS OR IMPLIED, INCLUDING, WITHOUT LIMITATION, ANY IMPLIED WARRANTIES OF MERCHANTABILITY OR FITNESS FOR A PARTICULAR PURPOSE. IF BUYER SHALL FAIL TO PAY WHEN DUE ANY PORTION OF THE PURCHASE PRICE OR ANY OTHER PAYMENT REQUIRED FROM BUYER TO SELLER UNDER THIS CONTRACT, ALL WARRANTIES AND REMEDIES SET FORTH HEREIN SHALL BE DEEMED NULL AND VOID, AB INITIO. THE PARTIES ACKNOWLEDGE AND AGREE THAT THE EXCLUSIVE REMEDY UNDER THE FOREGOING LIMITED WARRANTY SHALL NOT HAVE FAILED OF ITS ESSENTIAL PURPOSE (AS THAT TERM IS USED IN THE UNIFORM COMMERCIAL CODE) PROVIDED THAT SELLER REMAINS WILLING TO REPAIR OR REPLACE DEFECTIVE GOODS WITHIN A COMMERCIALLY REASONABLE TIME. BUYER SPECIFICALLY ACKNOWLEDGES AND AGREES THAT THE PRICE CHARGED BY SELLER FOR THE GOODS IS BASED UPON THE LIMITATIONS OF SELLER'S WARRANTY OBLIGATIONS AND OTHER LIABILITIES AS SET FORTH HEREIN.

LIMITATION OF LIABILITY. NOTWITHSTANDING ANY OTHER PROVISION HEREOF, IN NO EVENT SHALL SELLER BE LIABLE TO BUYER OR TO ANY OTHER PARTY FOR ANY INCIDENTAL, SPECIAL, INDIRECT OR CONSEQUENTIAL DAMAGES, LOST PROFITS, OR FOR ANY LOSSES, CLAIMS OR DAMAGES RELATING TO OR ARISING FROM THE USE OR OPERATION OF THE GOODS, AND IN NO EVENT SHALL ANY CLAIM OR RECOVERY OF ANY KIND EXCEED THE PURCHASE PRICE OF THE GOODS IDENTIFIED IN THE RELATED INVOICE.

5. SHORTAGE AND NONCONFORMITY

Any claim of shortage or that the goods do not conform with the specifications of the order or model must be made in writing within ten (10) days after delivery of the goods (as to which such claim is made) to Buyer or its nominees, but in no event shall the claim be later than within the time limit provided by the carrier or insurance company, otherwise such claim shall be deemed waived. Buyer may not return any goods claimed to be in non-conformity without Seller's prior written authorization. Goods returned without permission will not be accepted, including for credit, and will be returned to Buyer, F.O.B. Sellter's plant. Any claim based on the receipt of damaged Goods must be filed with the carrier which delivered the goods. The samples, measurements, dimensions and weights contained in the Seller's catalogs, sales manuals, photographs and drawings constitute only an approximate guide. The Seller reserves the right to make any change which the Seller, in its absolute discretion, considers necessary. While the goods will be delivered principally according to specifications or standards or quantities agreed upon, insignificant deviations or insignificant changes in construction are permissible. The same applies to partial deliveries, In the event that Buyer has a verified claim of shortage or nonconformity of the goods to the specifications of the order or the model, and if such claim has been submitted within the required time limit as set forth above, the Seller shall, at its own expense, make up for the shortage of the goods, or replace or repair the goods, as the case may be, but in no event shall Seller be or become liable to Buyer or to any other person or persons for any loss in damage, direct or indirect, arising out of or caused by such incidents or for the loss of profits, business or good will. The liability of the Seller to Buyer, if any hereunder, for breach of warranty, contract, negligence or otherwise, shall in no event exceed the amount of the purchase price of the goods sold with respect to which any damages are claimed. Shipping dates are estimates unless parties expressly agree on time of the essence.

6. FORCE MAJEURE

The obligation of the Seller shall be modified or excused, as the case may be, for reasons of Acts of God, war, governmental law regulations, strikes or lock-outs, fire, breakdown of machinery, whether in its own business enterprise, or if for any other cause beyond Seller's control, the goods cannot be delivered or their delivery becomes delayed in whole or in part. In the above instances time for delivery shall be extended for the period of the delay caused, with the proviso, however, that either party may cancel in writing the undelivered portion of the order or contract if the delay exceeds six (6) months from the delivery date originally confirmed by Seller. In no event shall Seller become liable in the aforesaid instances to Buyer or any third party for consequential damages or business loss.

7. SHIPMENT AS UNIT

Each shipment by Seller shall be treated as a separate and distinct unit with respect, but only with respect to forwarding, terms of payment, and the making of claims by the Buyer: provided, however, that if the Buyer defaults in the payment of any obligation to Seller or any installments thereof, under any agreement between Buyer and Seller, or if Buyer refuses to accept any goods when tendered for delivery, the Seller may, on fifteen (15) days written notice to the Buyer, without prejudice to Seller's other lawful remedies, either defer further performance until the defaulted payments are made in full, or make future deliveries for cash in advance only, or treat the entire contract or contracts with Buyer as breached by the Buyer and pursue its remedies for breach.

8. BUYER'S REFUSAL OF DELIVERY

If Buyer refuses to accept delivery of any goods tendered for delivery, then Seller, without prejudice to Seller's other lawful remedies, may either store or cause such goods to be stored in a warehouse, for buyer's account and at Buyer's cost, risk and expense, or sell such goods (without notice) to any purchases at public or private sale, and hold the Buyer liable for any difference between (a) the contract price of the goods, and (b) the price at which goods are resold less the costs and expense of such resale including brokerage commissions, or restocking charges.

9. GOODS IN TRANSIT

If prior to delivery or while the goods are in transit, Buyer or Seller becomes bankrupt or insolvent, or any petition in bankruptcy or for the reorganization or for a state court receivership is filed against Buyer or Seller, as the case may be, then the other party hereto may forthwith terminate this contract by giving written notice of such termination. Such termination shall not affect any claim for damages available to the Buyer, provided that if Buyer is then indebted to Seller, the amount of any such damage claim shall be abated to the extent that the indebtedness of Buyer to Seller, as actually paid in money, is abated by any order of judgement entered or any plan adopted in any bankruptcy, reorganization, receivership, or similar proceeding. Such termination shall not prejudice the Seller's rights to any amounts then due under the contract. If Buyer becomes bankrupt or insolvent or any petition in bankruptcy or for reorganizing or if a state court receivership is filed against Buyer, then, at its option Seller may take possession of any goods theretofore sold to Buyer, in connection with which the full purchase price has not been paid, analogous to the terns and provisions set forth in Paragraphs 11 and 12 hereinafter.

10. DELIVERY

(a) Any indicated dates of delivery are approximate only, but NORD Gear will attempt to meet them whenever possible. (b) NORD Gear will not be liable for any penalty clausess contained in any specifications or order submitted unless agreed to in writing by an authorized officer of NORD Gear Corporation. (c) Unless otherwise agreed, delivery of the goods to any carrier shall constitute delivery to the Buyer, and thereafter the risk of loss or damage to the goods shall be upon the Buyer. (d) If the Buyer does not give delivery instructions to the Seller at least (10) days prior to the delivery date ex factory confirmed by the Seller, the Seller may deliver the goods to a carrier of its own choosing, at Buyer's cost and risk, or, at Seller's option, may store the goods on the pier or any warehouse, at Buyer's cost and risk. Any purchase price in such event becomes due and payable within ten (10) days of such storage.

11. PAYMENT OF PURCHASE PRICE

Time of payment is of the essence under the contract. Unless otherwise provided, terms of payment are 30 days net from the date of invoice with a 1% discount if paid within 10 days of date of invoice. Upon default in any of the terms of the contract, or failure to comply with any of the conditions thereof, or upon seizure of the property under execution or other legal process, or if the Buyer becomes bankrupt or insolvent, or any petition for reorganization or for a state court receivership is filed against Buyer, or if the Buyer makes any assignment for the benefit of it's creditors or otherwise sells, encumbers or disposes of the goods, or if for any other reason the Seller should deem itself insecure, the full amount of the purchase price then remaining unpaid shall at once become due and payable at the option of the Seller.

12. BUYER'S DEFAULT

Upon the Buyer's default, the Seller may dispose of the merchandise in any manner that it deems fit and, if it desires to resell same, may do so at private or public sale, with or without notice, and with or without the property being at the place of sale, subject, however, to applicable laws. The Seller or its assigns shall have the right to bid at such sale and may become the purchaser of the property. The proceeds of the sale shall first be applied to the expenses incurred in retaking, repairing, storing and selling the goods, reasonable attorney's fees included, and then shall be applied to the payment of the balance due under the contract. Any surplus amount shall be paid to the Buyer. If a deficiency results after the resale, the Buyer agrees to pay such forthwith, together with reasonable attorney's fees, for the recovery of the goods incurred by the Seller. If upon the Buyer's default, the Seller elects not to resell any goods which it may repossess, then the cost of repossession, including reasonable attorney's fees, shall forthwith be due and payable from Buyer to Seller. Buyer agrees to pay all reasonable costs and reasonable attorneys' fees incurred by Seller in enforcing Seller's rights against Buyer, including Seller's right to payment of the purchase price of the goods and Buyer's payment of all other amounts owing to Seller required under this Invoice and Conditions of Sale.

13. SECURITY INTEREST AND TITLE

In states and localities which are governed by the Uniform Commercial Code, this contract shall serve as security agreement, reserving in Seller a security interest until full payment of purchase price. The provisions of the Uniform Commercial Code regarding security interest shall have preference and apply if inconsistent with other terms of the conditions of sale. In states and localities where the Uniform Commercial Code does not apply, title to the goods shall remain in the Seller or its assigns until full payment of the purchase price. Buyer agrees to execute forthwith any and all documents in such a way and form as Seller may need for filing or recording the security interest under the Uniform Commercial Code with the proper registers or offices, or for filing or recording the conditional sales contract.

14. SALES AND USE TAX

Buyer agrees to bear and pay any sales or use tax in connection with the purchase herein, and to hold the Seller harmless from payment. At the option the Seller, Buyer shall give evidence of payment or of exemption certificate.

15. INSURANCE

The Buyer shall keep the goods insured against damage by fire, water or other casualty as required by Seller, with a company acceptable to Seller, with loss payable to Seller for the total purchase price until the Seller is fully paid. Seller, if it so elects, may place said insurance at Buyer's expense; Seller may cancel such insurance at any time and without notice and may receive the return premium, if any.

16. MODIFICATION BY SELLER

Any contract may be assigned or transferred by the Seller, or the time for the making of any payment due by Buyer may be extended by Seller without derogation of any of the rights of the Seller or its assigns. Waiver by any party of any default shall not be deemed a waiver of any subsequent default.

17. RETURNED GOODS

No goods will be accepted for return unless authorized in writing by Seller. In all cases, transportation and restocking charges will be borne by Buyer.

18. PACKING

The Buyer will be charged for export packaging or other special packing desired. Cost for cartage to ship or transfer express will be added to the invoice. No credit will be allowed if no packing is required.

19. CHANGES/CANCELLATION

NORD Gear will not accept changes in specifications to a confirmed order unless such changes are requested in writing and confirmed back in writing. In addition, the purchaser must to agree to any additional charges that may arise from the change. Placing orders on hold or cancellation of orders require Seller's written approval, and are subject to cancellation and/or restocking charges.

20. BUYER'S RESPONSIBILITY AS TO MAINTENANCE

Buyer shall use and shall require its employees and agents to use all safety devices and guards and shall maintain the same in proper working order. Buyer shall use and require its employees and agents to use safe operation procedures in operating the equipment and shall further obey and have its employees and agents obey safety instructions given by Seller. If Buyer fails to meet the obligations herein, Buyer agrees to defend, indemnify and save Seller harmless from any liability or obligation with regard to any personal injuries or property damages directly or indirectly connected with the operation of the equipment. Buyer further agrees to notify Seller promptly and in any event not later than ten (10) days after notice or knowledge of any accident or malfunction involving Seller's equipment which has caused personal injury or property damages and to cooperate fully with Seller in investigating and determining the causes of such accident and malfunction. In the event that Buyer fails to give such notice to Seller or to cooperate with Seller, Buyer shall be obligated to defend, indemnify and save Seller harmless from any such claims arising from such accident.

21. MISCELLANEOUS PROVISIONS

(a) If for any reason a provision of a contract is legally invalid, then in such event the rest of the contract shall remain in full force and affect, except that the parties shall try to replace such invalid provision closest to their original mutual intentions. (b) This Invoice and these Conditions of Sale constitute the entire agreement between the parties regarding the subject matter hereof and supercedes all prior agreements, understandings and statements, whether oral or written, regarding such subject matter. No modification to, change in or departure from, the provisions of this Invoice and Conditions of Sale shall be valid or binding on Seller, unless approved in writing by Seller. No course of dealing or usage of trade shall be applicable unless expressly incorporated into this Invoice and Conditions of Sale. Any amendments to any contract or contracts between the parties shall be valid only upon the written consent of both parties.

22. NON ASSIGNMENT BY BUYER

Contract or contracts may not be assigned by the Buyer without prior written consent of the Seller.

23. APPLICABLE LAW AND VENUE

All contracts and their interpretation are governed by the applicable, substantive laws of the State of Wisconsin. Any litigation brought by the Buyer regarding this Invoice or goods purchased hereunder may only be brought in the Circuit Court for Dane County, Wisconsin.

Send Quote Requests to info@automatedpt.com
Call +1(800)985-6929 To Order or Order Online At Nordgearmotors.com

Send Quote Requests to info@automatedpt.com Call +1(800)985-6929 To Order or Order Online At Nordgearmotors.com

NORD GEAR LIMITED

Terms and Conditions of Sale

1. CONTRACT
Any contract between Nord Gear Limited, hereinafter designated as "Seller", and the party or parties accepting these terms and conditions of sale and any agent, officer, servant, employee or subcontractor of such party or parties, hereinafter designated as "Buyer", is subject to the terms and conditions of sale hereinafter set forth. Any deviation from such terms and conditions must be specifically set forth in writing and consented to by Seller.

2. CONFIRMATION
An order shall be deemed accepted only when duly confirmed by Seller, at Nord Gear Limited's home office in Brampton, Ontario, and upon such confirmation the orders shall become a contract binding upon the parties hereto, their successors and assigns.

3. PRICES
Prices shown are list prices and may be subject to applicable discounts. Unless otherwise agreed upon in writing, prices are FOB factory Brampton, Ontario. Prices and discounts are subject to change without notice until the order is accepted. Seller's prices do not include cost of any inspection permits required.

4. LIMITED WARRANTY
Seller warrants the goods sold hereunder to be free from defects in material and workmanship under normal use and service not arising from misuse, negligence, or accident, including but not limited to the use, installation, and transportation of the goods by Buyer, its agents, servants, employees, or by carriers. This warranty shall pertain to any part or parts of any goods to which Buyer or its assigns has within one year from date of delivery given written notice of claimed defects to Seller. Buyer shall be required to furnish Seller with details of such defects and this warranty shall be effective as to such goods which Seller's examination shall disclose to its satisfaction to have been defective and which at Seller's option shall promptly thereafter be returned to Seller or its nominees. EXCEPT FOR THE EXPRESS WARRANTIES SET FORTH ABOVE, SELLER HAS MADE NO WARRANTIES, EXPRESS, IMPLIED OR STATUTORY, AS TO THE GOODS SOLD HEREUNDER, INCLUDING, BUT NOT LIMITED TO THEIR MERCHANTABILITY OR FITNESS FOR ANY PARTICULAR PURPOSE. ANY DESCRIPTION OR MODEL OF THE GOODS IS FOR IDENTIFICATION OR ILLUSTRATIVE PURPOSES ONLY AND SHALL NOT BE DEEMED TO CREATE AN EXPRESS WARRANTY. The Buyer's exclusive remedy for claims arising from defective or nonconforming goods shall be limited to the repair or replacement thereof at the Seller's sole option. THE SELLER SHALL NOT BE RESPONSIBLE OR LIABLE FOR CONSEQUENTIAL DAMAGES ARISING OUT OF OR IN CONNECTION WITH THE SALE, DELIVERY, USE, PERFORMANCE, OR SERVICE OF THE GOODS SOLD UNDER THIS AGREEMENT. SELLER SHALL NOT BE LIABLE FOR ANY LOST PROFITS OR FOR ANY CLAIM OR DEMAND AGAINST SELLER BY ANY PARTY. IN NO EVENT WILL SELLER BE LIABLE FOR SPECIAL, INDIRECT OR CONSEQUENTIAL DAMAGES, EVEN IF SELLER HAS BEEN ADVISED OF THE POSSIBILITY OF SUCH DAMAGES. SELLER'S AGGREGATE LIABILITY FOR DAMAGES UNDER THIS AGREEMENT, WHETHER ARISING FROM OR BASED UPON BREACH OF WARRANTY, BREACH OF CONTRACT, TORT OR OTHER CAUSE OF ACTION, SHALL IN NO CASE EXCEED THE PURCHASE PRICE THAT BUYER PAYS FOR THE PARTICULAR GOODS INVOLVED. Seller shall in no event be liable to any person or firm (including any assignee or Buyer) except Buyer and its successors. Unless specifically authorized by Seller in writing, Seller shall not become responsible for any repair work done by Buyer or any other party on any goods sold. Any costs of the return of such goods to Seller shall be borne by Buyer. Goods sold but not manufactured by Seller are being warranted as to defects in material and workmanship consistent with the limited warranty policy of the original manufacturer of the goods and if there is not such a limited warranty policy, the warranty shall be limited to the provisions of Article 4 herein. Standards for the operating characteristics of the gearboxes and the gear motors are in conformity with Seller's tests. THIS WARRANTY IS IN LIEU OF ALL OTHER EXPRESS OR IMPLIED WARRANTIES, INCLUDING ANY IMPLIED WARRANTY OF MERCHANTABILITY OR FITNESS FOR ANY PARTICULAR PURPOSE SELLER DOES NOT ASSUME, NOR DOES IT AUTHORIZE ANY PERSON TO ASSUME, ON ITS BEHALF, ANY OTHER OBLIGATION OR LIABILITY.

5. SHORTAGE AND NONCONFORMITY
Any claim of shortage or that the goods do not conform with the specifications of the order or model must be made in writing within ten (10) days after delivery of the goods (as to which such claim is made) to Buyer or its nominees, but in no event shall the claim be later than within the time limit provided by the carrier or insurance company, otherwise such claim shall be deemed waived. The samples, measurements, dimensions and weights contained in Seller's catalogs, sales manuals, photographs and drawings constitute only an approximate guide. Seller reserves the right to make any changes which Seller, in its absolute discretion, considers necessary. While the goods will be delivered principally according to specifications of standards or quantities agreed upon, insignificant deviations or insignificant changes in construction are permissible. The same applies to partial deliveries. In the event that Buyer has a verified claim of shortage or nonconformity of the goods to the specifications of the order or the model, and if such claim has been submitted within the required time limit as set forth above, Seller shall, at its own expense, make up for the shortage of the goods, or replace or repair the goods, as the cause may be, but in no event shall Seller be or become liable to Buyer or to any other person or persons for any loss in damage, direct or indirect, arising out of or caused by such incidents or for the loss of profits, business of good will. Shipping dates are estimates unless parties expressly agree on time of the essence.

6. FORCE MAJEURE
The obligation of Seller shall be modified or excused, as the case may be, for reasons of Acts of God, war, governmental law regulations, strikes or lock-outs, fire, breakdown of machinery, whether in its own business enterprise, or if for any other cause beyond Seller's control, the goods cannot be delivered or their delivery becomes delayed in whole or in part. In the above instances time for delivery shall be extended for the period of the delay caused, with the proviso, however, that either party may cancel in writing the undelivered portion of the order of contract if the delay exceeds six (6) months from the delivery date originally confirmed by Seller. In no event shall Seller become liable in the aforesaid instances to Buyer or any third party for consequential damages or business loss.

7. SHIPMENT AS UNIT
Each shipment by Seller shall be treated as a separate and distinct unit with respect, but only with respect to forwarding, terms of payment, and the making of claims by Buyer; provided, however, that if Buyer defaults in the payment of any obligation to Seller or any installments thereof, under any agreement between Buyer and Seller, or if Buyer refuses to accept any goods when tendered for delivery, Seller may, on fifteen (15) days written notice to Buyer, without prejudice to Seller's other lawful remedies, either defer further performance until the defaulted payments are made in full, or make future deliveries for cash in advance only, or to treat the entire contract or contracts with Buyer as breached by Buyer and pursue its remedies for breach.

8. BUYER'S REFUSAL OF D ELIVERY
If Buyer refuses to accept delivery of any goods tendered for delivery, then Seller, without prejudice to Seller's other lawful remedies, may either store or cause such goods to be stored in a warehouse, for Buyer's account and at Buyer's cost, risk and expense, or sell such goods (without notice) to any purchaser at public or private sale, and hold Buyer liable for any difference between (A) the contract price of the goods, and (B) the price at which goods are resold less the costs and expense of such resale including brokerage commissions, or restocking charges.

9. GOODS IN TRANSIT
If prior to delivery or while the goods are in transit, Buyer or Seller becomes bankrupt or insolvent, or any petition in bankruptcy or for the reorganization or for appointment of a receiver is filed against Buyer or Seller, as the case may be, then the other party hereto may forthwith terminate this contract by giving written notice of such termination. Such termination shall not affect any claim for damages available to Buyer, to Seller, as actually paid in money, is abated by any order of judgment entered or any plan adopted in any bankruptcy, reorganization, receivership, or similar proceeding. Such termination shall not prejudice Seller's rights to any amounts then due under the contract. If Buyer becomes bankrupt or insolvent or any petition in bankruptcy or for reorganization or if a state court receivership is filed against Buyer, then, at its option, Seller may take possession of any goods theretofore sold to Buyer, in connection with which the full purchase price has not been paid, analogous to the terms and provisions set forth in Paragraphs 11 and 12 hereinafter.

10.DELIVERY
(A)Unless otherwise agreed, delivery of the goods to any carrier shall constitute delivery to Buyer, and thereafter the risk of loss or damage to the goods shall be upon Buyer. (B) If Buyer does not give delivery instructions to Seller at least ten (10) days prior to the delivery date ex factory confirmed by Seller, Seller may deliver the goods to a carrier of its own choosing, at Buyer's cost and risk, or, at Seller's option may store the goods on the pier or on any warehouse at Buyer's cost and risk. Any purchase price in such event becomes due and payable within ten (10) days of such storage.

11. PAYMENT OF PURCHASE PRICE
Time of payment is of the essence under the contract. Upon default in any of the terms of the contract, or failure to comply with any of the conditions thereof, or upon seizure of the property under execution or other legal process, or if Buyer becomes bankrupt or insolvent, or any petitions for reorganization or for appointment of a receiver is filed against Buyer, or if Buyer makes any assignment for the benefit of its creditors or otherwise sells, encumbers or disposes of the goods, or if for any other reason Seller should deem itself insecure, the full amount of the purchase price then remaining unpaid shall at once become due and payable at the option of Seller. Interest on the delinquent payment from the due date thereof until paid shall be at a rate of two (2%) percent per month.

12. BUYER'S DEFAULT
Upon Buyer's default, Seller may dispose of the merchandise in any manner that it deems fit and, if it desires to resell same, may do so at private or public sale, with or without notice, and with or without the property being at the place of sale, subject, however, to applicable laws. Seller or its assigns shall have the right to bid at such sale and may become the purchaser of the property. The proceeds of the sale shall first be applied to the expenses incurred in retaking, repairing, storing and selling the goods; reasonable solicitor's fees included, and then shall be applied to the payment of the balance due under the contract. Any surplus amount shall be paid to Buyer. If a deficiency results after the sale, Buyer agrees to pay such forthwith, together with reasonable solicitor's fees, for the recovery of the goods incurred by Seller. If upon Buyer's default, Seller elects not to resell any goods which it may repossess, then the cost of repossession, including reasonable solicitor's fees, shall forthwith be due and payable from Buyer to Seller.

13. SECURITY INTEREST AND TITLE
In provinces which are governed by a Personal Property Security Act, this contract shall serve as a security agreement, reserving in Seller a security interest until full payment of the purchase price. The provisions of the Personal Property Security Act regarding security interest shall have preference and apply if inconsistent with other terms of the conditions of sale herein. In provinces where a Personal Property Security Act does not apply, title to the goods shall remain in the Seller or its assigns until full payment of the purchase price. Buyer agrees to execute forthwith any and all documents in such a way and form as Seller may need for filing or recording the security interest under a Personal Property Security Act with the proper registers or offices, or for filing or recording the Conditional Sales Contract herein.

14. SALES AND USE TAX
Seller's prices do not include sales, use, excise or other taxes payable to any governmental authority in respect of the sale of Seller's goods. Buyer shall pay, in addition to Seller's price, the amount of any such taxes or shall reimburse Seller for the amount thereof that Seller may be required to pay. At the option of Seller, Buyer shall give evidence of payment or of exemption certificate.

15. INSURANCE
Buyer shall keep the goods insured against damage by fire, water or other casualty as required by Seller, with a company acceptable to Seller, with loss payable to Seller for the total purchase price until Seller is fully paid. Seller, if it so elects, may place said insurance at Buyer's expense; Seller may cancel such insurance at any time and without notice and may receive the return premium, if any.

16. MODIFICATION BY SELLER
Any contract may be assigned or transferred by Seller, or the time for the making of any payment due by Buyer may be extended by Seller without derogation of any of the rights of Seller or its assigns. Waiver by any party of any default shall not be deemed a waiver of any subsequent default.

17. RETURNED GOODS
No goods will be accepted for return unless authorized in writing by Seller. In all cases, transportation and restocking charges will be borne by Buyer.

18. PACKING
Seller does not charge for standard packaging for domestic shipment. Buyer will be charged, however, for export packaging or other special packing desired. Cost for cartage to ship or transfer express will be added to the invoice. No credit will be allowed if no packing is required.

19. EXPORT ORDER
Export orders are to be accompanied by a confirmed irrevocable Letter of Credit in Seller's favor, in Canadian currency, with an accredited Canadian bank, subject to Seller's draft, with shipping documents attached.

20. CANCELLATION
Placing orders on hold or cancellation of orders require Seller's written approval, and are subject to cancellation and/or restocking charges.

21. BUYER'S RESPONSIBILITY AS TO MAINTENANCE
Buyer shall use and shall require its employees and agents to use all safety devices and guards and shall maintain the same in proper working order. Buyer shall use and require its employees and agents to use safe operating procedures in operating the equipment and shall further obey and have its employees and agents obey safety instructions given by Seller. If Buyer fails to meet the obligations herein, Buyer agrees to indemnify and save Seller harmless from any liability or obligation with regard to any personal injuries or property damages directly or indirectly connected with the operation of the equipment. Buyer further agrees to notify Seller promptly and in any event not later than ten (10) days after notice or knowledge of any accident or malfunction involving Seller's equipment which has caused personal injury or property damages and to cooperate fully with Seller in investigating and determining the causes of such accident and malfunction. In the event that Buyer fails to give such notice to Seller or to cooperate with Seller, Buyer shall be obligated to indemnify and save Seller harmless from any such claims arising from such accident.

22. MISCELLANOUS PROVISIONS
(A)If for any reason a provision of a contract is legally invalid, then in such event the rest of the contract shall remain in full force and affect, except that the parties shall try to replace such invalid provision with a provision closest to their original mutual intentions. (B) Any amendments to any contract or contracts require the consent in writing by both parties. Headings in this document are for ease of reference only.

23. NON ASSIGNMENT BY BUYER
Contract or contracts may not be assigned by Buyer without prior written consent of Seller.

24. APPLICABLE LAW
This agreement shall be governed by the laws of the Province of Ontario and the applicable laws of Canada. Buyer and Seller agree that any judicial proceeding with respect to this agreement must be brought and maintained in the City of Toronto, In the Province of Ontario.

25.
This instrument sets forth the entire understanding and agreement of the parties hereto in respect of the subject matter hereof, and all prior undertaking between the parties hereto, together with all representations and obligations of such parties in respect of such subject matter, shall be superseded by and merged into this instrument.

26.
The provisions of this agreement shall bind and ensure to the benefit of the parties hereto and their respective heirs, executors, administrators, successors and (subject to any restrictions or assignment herein above set forth) assigns, as the case may be.

27.
The parties acknowledge that they have requested this document and all notices or other documents relating thereto be drafted in the English language.

Les parties reconnaissent qu'ils ont requis que ce contrat et tous les avis ou autres documents qui s'y rapportent soient rédiges en langue anglaise.

"Terms and Conditions in French available upon request."

Send Quote Requests to info@automatedpt.com
Call +1(800)985-6929 To Order or Order Online At Nordgearmotors.com

Send Quote Requests to info@automatedpt.com
Call +1(800)985-6929 To Order or Order Online At Nordgearmotors.com

Mounting Positions

The reducer mounting position determines the approximate oil fill level and the appropriate vent location. In some cases mounting position may dictate possible variation in final reducer assembly. If considering any mounting positions that are not shown as catalog-standard options, it is critical that the customer consult with NORD prior to ordering.

In-line

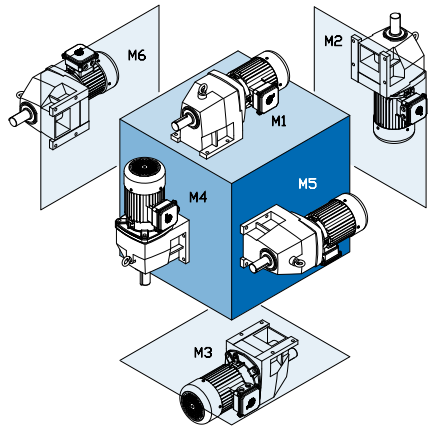

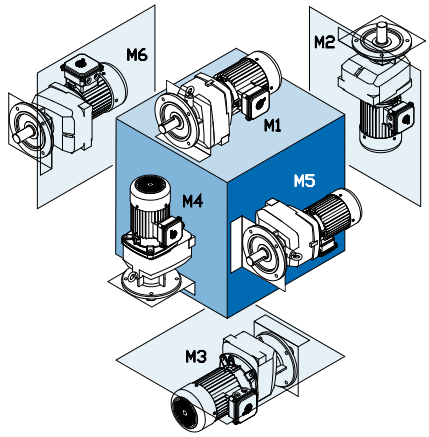

Clincher™

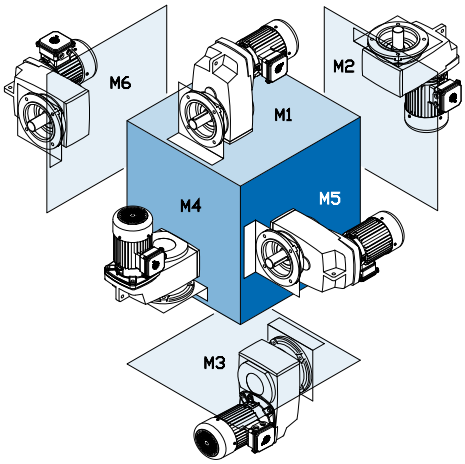

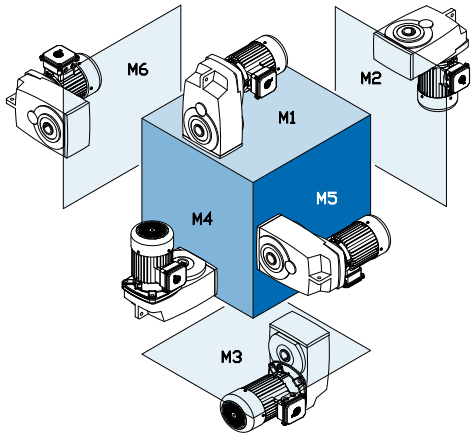

Right-Angle

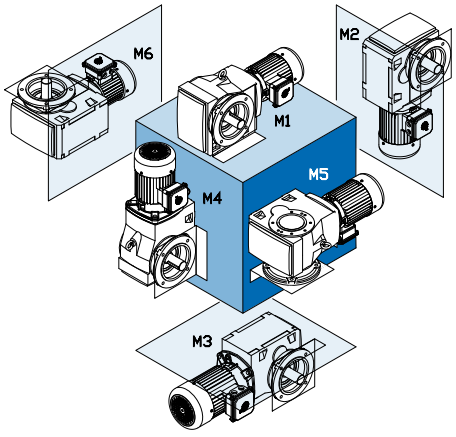

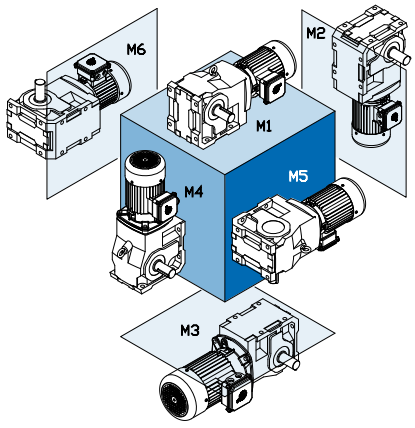

Send Quote Requests to info@automatedpt.com
Call +1(800)985-6929 To Order or Order Online At Nordgearmotors.com

DRIVESYSTEMS

Mounting Positions

Mounting Configuration

NORD provides gearmotors, speed reducers and motors that can be configured very flexibly to suit customer needs. When ordering it is beneficial that the drive be specified exactly the way you want it delivered.

Mounting Positions

Basic mounting

❍ M1 ❍ M2 ❍ M3 ❍ M4 ❍ M5 ❍ M6

Right-angle with solid shaft

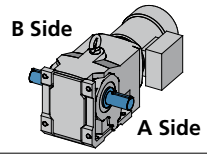

❍ Shaft Side A
❍ Shaft Side B
❍ Shaft Side A+B

Right-angle with shrink disc

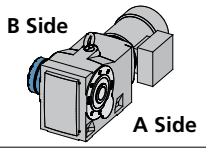

❍ Shrink Disc Side A
❍ Shrink Disc Side B

Right-angle flange mount units

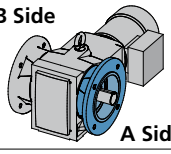

❍ Flange Side A
❍ Flange Side B
❍ Flange Side A+B

Right-angle with hollow shaft cover

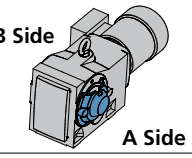

❍ Hollow Shaft Cover Side A
❍ Hollow Shaft Cover Side B

Right-angle with torque arm

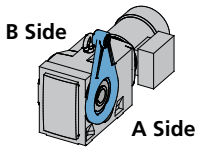

❍ Torque Arm Side A
❍ Torque Arm Side B

Shaft mount torque arm orientation

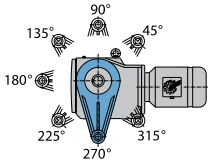

Orientation _____

92 - Bevel	90° - 315°, Every 45°
90 - Bevel	45° - 270°, Every 45°
Helical-worm	45° - 270°, Every 45°
Helical-worm 02040	90°, 180°, 270°, Every 90°

Bottom mount torque arm

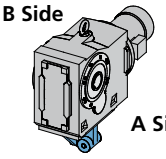

❍ Torque Arm Side A
❍ Torque Arm Side B

Brake motor with hand release lever

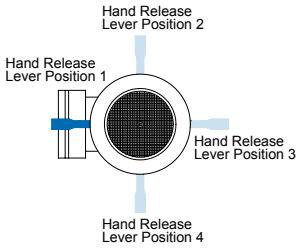

❍ Hand Release Lever Pos. 1
❍ Hand Release Lever Pos. 2
❍ Hand Release Lever Pos. 3
❍ Hand Release Lever Pos. 4

Terminal box location

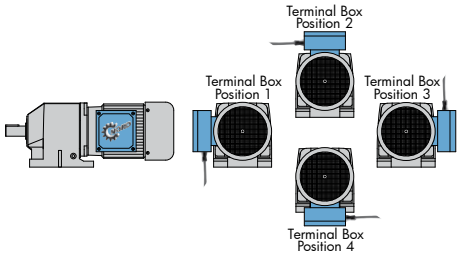

❍ Terminal Box Position 1 ❍ Terminal Box Position 3
❍ Terminal Box Position 2 ❍ Terminal Box Position 4

Conduit entry location

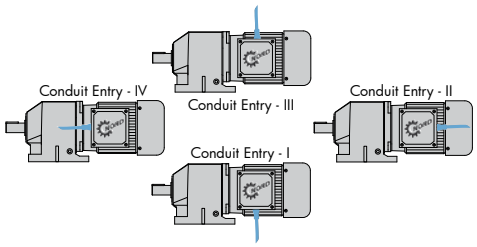

❍ Conduit Entry Location I* ❍ Conduit Entry Location III*
❍ Conduit Entry Location II ❍ Conduit Entry Location IV

Send Quote Requests to info@automatedpt.com
Call +1(800)985-6929 To Order or Order Online At Nordgearmotors.com

Send Quote Requests to info@automatedpt.com Call +1(800)985-6929 To Order or Order Online At Nordgearmotors.com

Mounting Positions

Mounting Positions

The reducer mounting position determines the approximate oil fill level and the appropriate vent location. In some cases mounting position may dictate possible variation in final reducer assembly. If considering any mounting positions that are not shown as catalog standard options, it is critical that the customer consult with NORD prior to ordering.

New Mounting Position System

NORD is in the processes of changing mounting position systems. Historically the NORD mounting position system was based on international motor standards. NORD is changing in an effort to simplify the system. The new system is based on the six sides of a cube. Below is a cross reference between the old and new mounting position codes.

Mounting Position Cross Reference Table (old to new)

Helical Gear Units (In-line)		Parallel Shaft Gear Units (Clincher™)		Helical-bevel Gear Units		Helical-worm Gear Units	
Old	New	Old	New	Old	New	Old	New
B3	M1	H1	M1	B3	M1	B3	M1
B5	M1	H2	M3	B3I	M4	B3I	M4
B5I	M3	H3	M6	B5	M2	B5	M2
B5II	M5	H4	M5	B5I	M1	B5I	M1
B5III	M6	H5	M4	B5II	M4	B5II	M4
B6	M5	H6	M2	B5III	M3	B5III	M3
B7	M6			B6	M2	B6	M2
B8	M3			B6I	M1	B6I	M1
V1	M4			B6II	M4	B6II	M4
V3	M2			B8	M3	B8	M3
V5	M4			B8I	M2	B8I	M2
V6	M2			H1	M1	H1	M1
				H2	M3	H2	M3
				H3	M4	H3	M4
				H4	M2	H4	M2
				H5	M5	H5	M5
				H6	M6	H6	M6
				V1	M5	V1	M5
				V3	M6	V3	M6
				V5	M5	V5	M5
				V5I	M5	V5I	M5
				V6	M6	V6	M6
				V6I	M6	V6I	M6

Mounting Position Cross Reference Table (new to old)

Helical Gear Units (In-line)		Parallel Shaft Gear Units (Clincher™)		Helical-bevel Gear Units		Helical-worm Gear Units	
New	Old	New	Old	New	Old	New	Old
M1	B3, B5	M1	H1	M1	B3, B5I, B6I, H1	M1	B3, B5I, B6I, H1
M2	V3, V6	M2	H6	M2	B5, B6, B8I, H4	M2	B5, B6, B8I, H4
M3	B5I, B8	M3	H2	M3	B5III, B8, H2	M3	B5III, B8, H2
M4	V1, V5	M4	H5	M4	B3I, B5II, B6II, H3	M4	B3I, B5II, B6II, H3
M5	B5II, B6	M5	H4	M5	H5, V1, V5, V5I	M5	H5, V1, V5, V5I
M6	B5III, B7	M6	H3	M6	H6, V3, V6, V6I	M6	H6, V3, V6, V6I

Send Quote Requests to info@automatedpt.com
Call +1(800)985-6929 To Order or Order Online At Nordgearmotors.com

NORD DRIVESYSTEMS

PRODUCT OVERVIEW

We can match our NORDAC Frequency Inverters with our Inverter/Vector Duty Motors and UNICASE™ Speed Reducers to provide a total AC Motor Drive solution from one trusted source.

UNICASE™ SPEED REDUCERS



HELICAL IN-LINE
- Foot or Flange Mount
- Torque up to 205,000 lb-in
- Gear ratios – 1.82:1 to over 300,000:1



NORDBLOC®.1 HELICAL IN-LINE
- Foot or Flange Mount
- Torque up to 26,550 lb-in
- Gear ratios – 1.88:1 to over 370:1

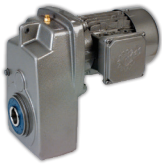

PARALLEL HELICAL CLINCHER™
- Shaft, Flange or Foot Mount
- Torque up to 797,000 lb-in
- Gear ratios – 4.26:1 to over 300,000:1

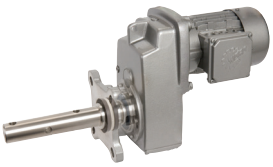

SCP SCREW CONVEYOR PACKAGE
- Shaft, or Flange Mount
- Torque up to 53,100 lb-in
- Gear ratios – 4.32:1 to over 1500:1



RIGHT ANGLE HELICAL-BEVEL 2-STAGE
- Foot, Flange or Shaft Mount
- Torque up to 5,840 lb-in
- Gear ratios – 4.1:1 to 70:1

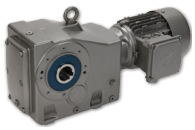

RIGHT ANGLE HELICAL-BEVEL
- Foot, Flange or Shaft Mount
- Torque up to 283,000 lb-in
- Gear ratios – 8.04:1 to over 300,000:1

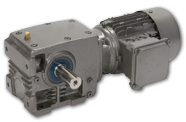

RIGHT ANGLE HELICAL-WORM
- Foot, Flange or Shaft Mount
- Torque up to 27,585 lb-in
- Gear ratios – 4.40:1 to over 300,000:1

HIGH PERFORMANCE MOTORS & BRAKEMOTORS



INVERTER/VECTOR DUTY
- Standard or Energy Efficient
- Integral, NEMA or Metric IEC
- 1/6 to 250 hp

UNICASE™ SPEED REDUCERS



MINICASE™ RIGHT ANGLE WORM
- Foot, Flange or Shaft Mount
- Torque up to 3,540 lb-in
- Gear ratios – 5:1 to 500:1

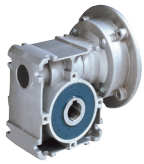

FLEXBLOC™ WORM
- Modular bolt-on options
- Torque up to 4,683 lb-in
- Gear ratios – 5:1 to 3,000:1

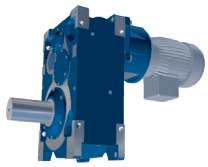

MAXXDRIVE™ LARGE INDUSTRIAL GEAR UNITS PARALLEL HELICAL
- Modular bolt-on options
- Torque up to 2,027,000 lb-in
- Gear ratios – 5:1 to 1,600:1

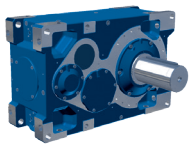

MAXXDRIVE™ LARGE INDUSTRIAL GEAR UNITS HELICAL-BEVEL
- Modular bolt-on options
- Torque up to 2,027,000 lb-in
- Gear ratios – 5:1 to 1,600:1

NORDAC AC VECTOR DRIVES



SK180E FAMILY
- Distributed, simple speed control
- 380-480V, 3-phase to 3.0 hp
- 200-240V, 3-phase to 1.5 hp
- 200-240V, 1-phase to 1.5 hp
- 100-120V, 1-phase to 0.75 hp



SK200E **FAMILY**
- Distributed, high performance
- 380-480V, 3-phase to 30 hp
- 200-240V, 3-phase to 15 hp
- 200-240V, 1-phase to 1.5 hp
- 100-120V, 1-phase to 1 hp



SK500E FAMILY
- Compact, cabinet mount, high performance
- 380-480V, 3-phase, to 125 hp
- 200-240V, 3-phase, to 25 hp
- 200-240V, 1-phase, to 3 hp
- 100-120V, 1-phase, to 1.5 hp

Send Quote Requests to info@automatedpt.com
Call +1(800)985-6929 To Order or Order Online At Nordgearmotors.com



www.nord.com

NORD Gear Corporation
National Customer Service Toll-Free: 888.314.6673
Info.us@nord.com

NORD Gear Limited
Toll-Free in Canada: 800.668.4378
info.ca@nord.com

WEST
Corona, CA (Los Angeles)
Phone: 951.393.6565

MIDWEST
Waunakee, WI (Madison)
Phone: 608.849.7300

EAST
Charlotte, NC
Phone: 980.215.7575

CANADA
Brampton, ON (Toronto)
Phone: 905.796.3606

100200001/2719

Send Quote Requests to info@automatedpt.com
Call +1(800)985-6929 To Order or Order Online At Nordgearmotors.com