Send Quote Requests to info@automatedpt.com
Call +1(800)985-6929 To Order or Order Online At Nordgearmotors.com

Intelligent Drivesystems

FLEXBLOC™ & MINICASE® WORM DRIVES

SI & SMI Gear Motors & Speed Reducers

G1035

NORD® DRIVESYSTEMS

Send Quote Requests to info@automatedpt.com
Call +1(800)985-6929 To Order or Order Online At Nordgearmotors.com

FLEXBLOC & MINICASE®
Innovative Design

FLEXBLOC™ and MINICASE®

This catalog includes two series of worm gear products, the FLEXBLOC™ and MINICASE®. Both products offer you superior performance in a compact package.

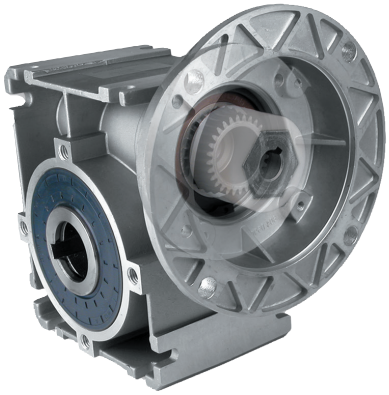

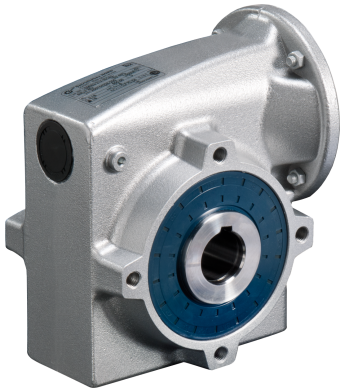

FLEXBLOC™

The FLEXBLOC™ (SI Series) is compact universal worm gear housing offering exceptional modularity and adaptability to any mounting position. Accessory kits that are easily assembled by NORD or the customer help to provide maximum flexibility and various mounting possibilities.

Our hollow-bore gear units are quickly converted to solid shaft models using a plug-in shaft kit. The shaft may be extended out either side or both sides of the worm unit; in addition, a longer solid shaft kit may be provided for use with our bolt-on flange-kits.

All FLEXBLOC™ worm modules and accessory kits are stocked at the factory to guarantee quick-shipment upon order. Motorized units are commonly supplied with NEMA or IEC input and NORD motor or brake motor. Special provisions may be made to provide integral motor assemblies.

Key Features:

- Universal foot and flange-mount housings.
- Factory-stocked worm-modules & accessory kits.
- Keyed hollow-bore units with solid shaft kits.
- Adaptable to any mounting position (universal oil fill).
- Easy to assemble accessories.
- NEMA, IEC, or solid shaft input as standard.
- Accommodates stocked C-Face motors or brakemotors.
- Integral motor options available (upon request).

MINICASE®

The MINICASE® (SMI Series) worm gear is a compact worm gear characterized by its smooth outer surface design and it's separate foot-mount and flange-mount housings, that are designed to accommodate the bolt-on torque arm or flange kit. NORD's latest MINICASE® worm gear offering is designed to readily accept our FLEXBLOC™ accessory kits.

Standard solid-shaft units are assembled with a one-piece output shaft while specific hollow-bore versions can accommodate the plug-in solid shaft accessory kits as well as bushing kits.

MINICASE® gearmotors and reducers are available with very short lead-times and are assembled from stocked parts. Motorized units are commonly supplied integrally or with a NEMA or IEC input paired with a NORD motor.

Key Features:

- Separate smooth-bodied foot & flange-mount housings.
- Factory-assembled from stocked parts.
- Designed to accommodate FLEXBLOC™ accessory kits.
- Keyed hollow-bore or one-piece solid shaft as standard.
- Specific bores accommodate FLEXBLOC™ plug-in shafts.
- Easy to assemble accessories.
- Commonly supplied with an integral motor or brakemotor.
- Also available with NEMA or IEC input and NORD motor.

Send Quote Requests to info@automatedpt.com
Call +1(800)985-6929 To Order or Order Online At Nordgearmotors.com

Table of Contents

A	**Introduction**	**4**
	Selection Information	11
	Warnings & Cautions	14
	Technical Information	16
	Mounting Positions & Mounting Configurations	24
B	**FLEXBLOC™ Ratings**	**43**
	Gearmotor Selection	46
	Ratings & Capacity Selection	62
	Nema Reducer Selection	68
	Component Selection & Ordering	77
C	**FLEXBLOC™ Dimensions**	**93**
D	**MINICASE Ratings**	**125**
	Integral Gearmotor Selection	128
	Nema C-Face Gearmotor Selection	138
	Ratings & Capacity Selection	160
	Nema Reducer Selection	154
E	**Minicase® Dimensions**	**171**
F	**Motors**	**213**
	Motor Ratings	235
	Motor Dimensions	259
G	**Brakes**	**269**
H	**AC Vector Drives**	**307**
I	**Engineering**	**329**
J	**Contacts**	**343**

NORD® DRIVESYSTEMS

www.nord.com

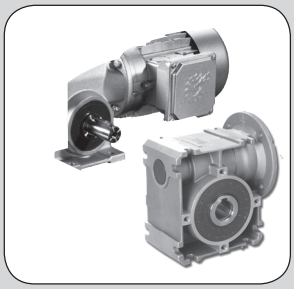

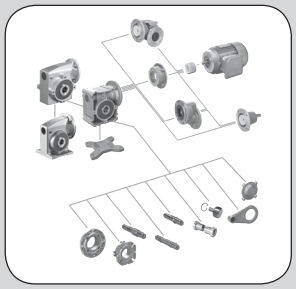

Send Quote Requests to info@automatedpt.com
Call +1(800)985-6929 To Order or Order Online At Nordgearmotors.com

Send Quote Requests to info@automatedpt.com
Call +1(800)985-6929 To Order or Order Online At Nordgearmotors.com

NORD Gear

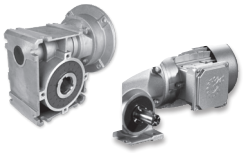

Company Overview

Since 1965, NORD has become well established in the power transmission industry and grown to global proportions on the strength of product performance, superior customer service, and intelligent drive solutions.

NORD designs and manufactures drivesystems engineered for adaptability. NORD's improving, expanded and innovative drive solutions are specified and utilized for a range of applications in nearly every industry throughout the world.

NORD Drivesystems' product portfolio is extensive and continuously evolving in order to meet the needs of today's fast-changing markets. NORD's range of drive equipment includes: helical in-line, helical shaft-mount, helical-bevel, helical-worm and worm gear units with torques from 90 lb-in to 2,200,000 lb-in, readily available AC motors from 1/6 HP to 250 HP, variable frequency drives up to 250 HP, & mechanical variable speed drives.

NORD does far more than manufacture the world's finest drive components. We provide our customers with optimum drive configurations for their specific purposes, providing each and every one with truly complete and efficient systems at a price/quality ratio unmatched in today's competitive markets.

Short, On-Time Delivery

As a NORD customer, you can rest assured that your order will be delivered on time. Because NORD has both decentralized assembly and manufacturing operations and a linked global network, we offer our customers:

- Fast, reliable delivery
- Greater product versatility
- Shorter lead times
- Timely shipping
- Global Availability

Global Availability

NORD makes its wide product range easily available through a global network that includes representation in over 60 countries. Providing all customers with prompt delivery, and expert support services, we are firmly committed to exceeding customer expectations and being totally responsive to the ideas and specifications of every customer, anywhere in the world.

Increased North American Presence

NORD covers North America with over 30 district offices and over 500 distributor branches. NORD operates a manufacturing and assembly facility in Waunakee, WI, Charlotte, NC, Corona, CA, Brampton, ON, and Monterrey, Mexico, resulting in an ever-increasing capacity in the United States and Canada and giving our customers the shortest lead times in the industry.

Send Quote Requests to info@automatedpt.com
Call +1(800)985-6929 To Order or Order Online At Nordgearmotors.com

Send Quote Requests to info@automatedpt.com
Call +1(800)985-6929 To Order or Order Online At Nordgearmotors.com

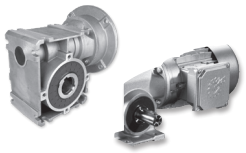

Manufacturing

NORD Gear continually invests in the latest research, manufacturing and automation technology. This ensures our ability to provide you with the utmost quality at an affordable price. Not only do we invest in our North American facilities, we invest in our factories throughout the world. We continually try to improve our practices to provide our customers with the most superior product available.

Quality

Quality is assured at NORD assembly and manufacturing facilities, based on ISO 9000 standards — from careful inspection of incoming materials to closely monitored machining operations including gear cutting, turning, hardening & grinding as well as finishing and assembly.

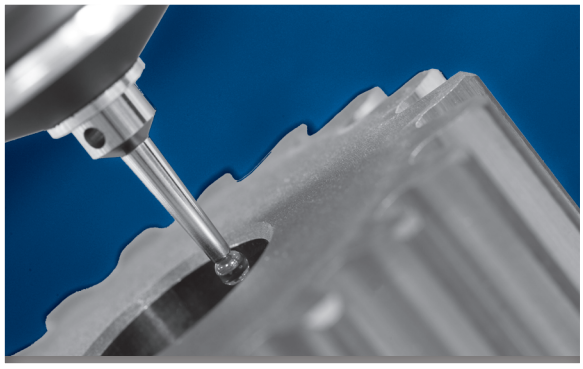

Worldwide Standards

NORD products are designed and manufactured based on the latest North American and global standards.

Energy Efficiency

Lowering your operating costs is one of our greatest goals! NORD research and development focuses on energy efficiency, with gearboxes, motors, and frequency inverters designed for lower energy consumption. Our fully diverse line of in-line or right-angle units and motors has been developed to suit your needs.

NORD 911

Trouble? Just call 715-NORD-911 (in Canada, 905-796-3606). Emergency service is available 24 hours a day, 7 days a week. We'll answer your call, ship the parts, or build a unit and have it shipped directly to you to provide what you need, when you need it.

Send Quote Requests to info@automatedpt.com
Call +1(800)985-6929 To Order or Order Online At Nordgearmotors.com

Send Quote Requests to info@automatedpt.com
Call +1(800)985-6929 To Order or Order Online At Nordgearmotors.com

Modular Worm Product Introduction

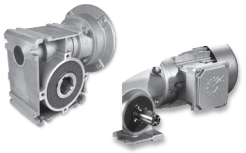

UNICASE® One Piece Housing

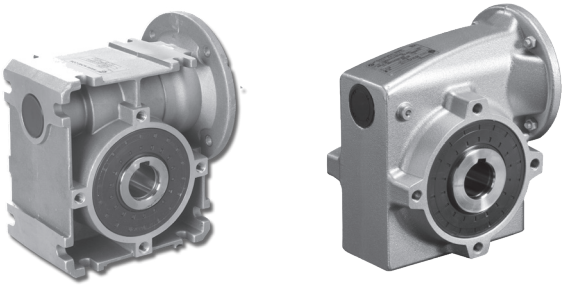

FLEXBLOC™ and MINICASE® housings are a heavy-duty one-piece UNICASE® design. Optimally designed internal reinforcements provide increased torsional strength and rigidity. Bearing and seal seats are contained within the casting, eliminating housing splits and bolt-on carriers that can weaken the housing and be more prone to oil leaks. Bores and mounting faces are precisely machined in one set-up ensuring accurate positioning of gears, bearings and seals while providing high load bearing capacity, minimal vibration, low noise and longer life for all components. In addition FLEXBLOC™ and MINICASE® housings are adaptable with versatile mounting options and accessory kits.

- Increased torsional strength and rigidity.
- Eliminates housing splits and bolt-on carriers.
- Leak-free housing design.
- Versatile mounting options and accessory kits.

Aluminum Alloy Housing – High Strength, Light Weight, Corrosion-Resistant

The NORD modular worm products are optimally designed with a high strength, light-weight aluminum alloy housing material. The oxidation layer that forms naturally on the aluminum alloy is inherently corrosion resistant in many applications, making paint and protective surface treatments optional. The aluminum alloy housing conducts heat better than cast iron providing lower internal operating temperatures and ensuring increased service life for the lubricating oil, bearings, seals and gears.

- High strength / light-weight.
- Natural corrosion resistance.
- Optional paint and protective surface treatments.
- Improved heat dissipation.
- Lower operating temperatures.
- Longer overall service life.

Factory Oil-Filled / Maintence-Free

NORD modular worm gear units are inherently maintence-free, factory oil filled, and supplied with a high-quality, long-life synthetic gear oil intend to be suitable for the life of the gear unit. Proper lubrication is essential to reduce friction, heat and component wear as well as to help prevent corrosion and oxidation. NORD modular worm gear units as standard supplied with oil plugs in the housing, and vent plugs are optionally offered.

Modular Construction

Modular, flexible mounting options, and common accessories are a core aspect to NORD modular worm gear products.

The FLEXBLOC™ universal worm gear housing offers exceptional modularity and adaptability since all worm modules and input and output accessory kits are stocked at the factory for easy assembly by NORD or the customer.

The MINICASE® gear units are assembled to order from stocked parts and are offered in either a footed-housing or flange-mount/shaft-mount housing. The MINICASE® also shares common input and output options and accessories with the FLEXBLOC™.

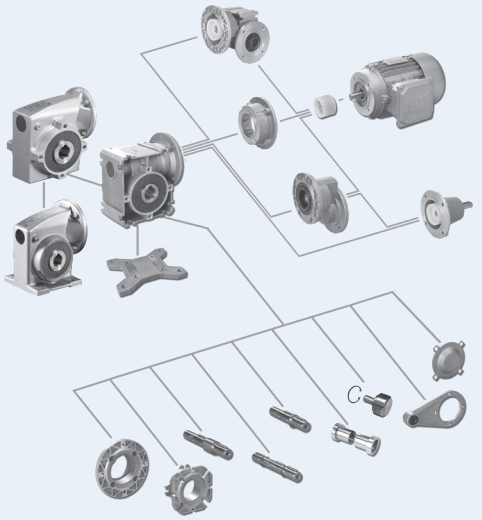

Send Quote Requests to info@automatedpt.com
Call +1(800)985-6929 To Order or Order Online At Nordgearmotors.com

Send Quote Requests to info@automatedpt.com
Call +1(800)985-6929 To Order or Order Online At Nordgearmotors.com

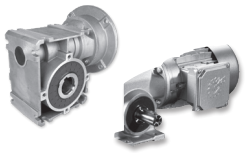

Modular Worm Product Introduction

Oversized Output Shaft Bearings

NORD modular worm gear units are designed with oversized output bearings. Bearing sizes are significantly larger than required to absorb the internal forces within the gear unit. As a by-product of the larger bearings, the internal shaft diameters increase, resulting in increased shaft strength and durability as well as larger hollow-shaft bore capacities. Compared to competitive worm gear units, NORD'S intentional selection of oversized output bearings provides the following advantages:

- Longer bearing life.
- Ability to support large overhung and thrust loads.
- Larger internal shaft diameters/Increased strength.
- Larger hollow bore capacities.

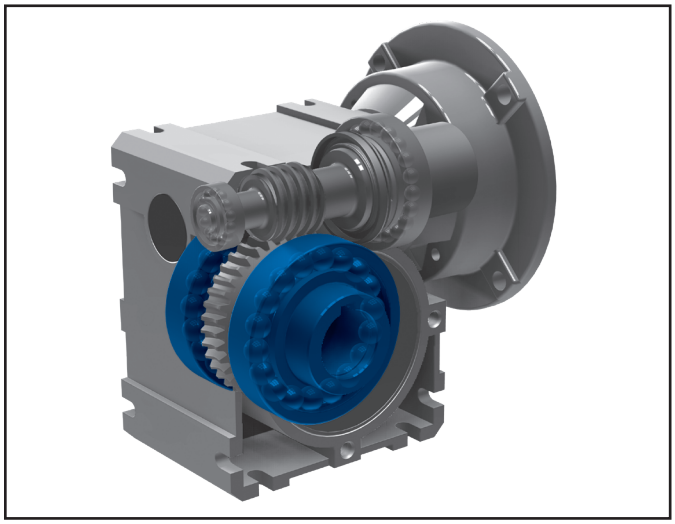

Optimized Worm-Gear Design

Optimized worm-gear design includes the selection of high quality materials combined with state-of-the-art design techniques and manufacturing. Surface hardened steel pinion gears and bronze-alloy worm wheels are designed for superior wear resistance and long life.

The precise sliding interaction of worm gear teeth eliminates abrupt tooth to tooth contact, and will minimize vibrations as well as noise. The optimization between materials and gear design also provide increased resistance to intermittent shock and overload conditions found in many applications.

- Designed for superior wear resistance / long life.
- Smooth and quite operation.
- Increased resistance to shock & overload conditions.

Size Offering

The FLEXBLOC™ (SI) and MINICASE® (SMI) gear unit share the following common sizes.

Type	SK 1SIxx / SK 1SMIxx (xx = mm, center distance)				
Center Distance	31 mm	40 mm	50 mm	63 mm	75 mm
	1.2 inch	1.6 inch	2.0 inch	2.5 inch	3.0 inch

Industry-Standard Worm Ratios

NORD FLEXBLOC™ and MINICASE® modular worm gear units cover a wide-range of industry-standard ratios from 5:1 to 100:1.

Standard Worm Ratios												
5	7.5	10	12.5	15	20	25	30	40	50	60	80	100

- By adding a helical pre-stage option standard ratios are expandable up to 1000:1.
- Compound configurations are easily assembled to create ratios up to 10,000:1.

High Performance Motors and Brake Motors

High performance NORD motors and brake motors are internationally accepted, conforming to North American (NEMA MG 1) and international (IEC) electrical specifications. NORD motors are constructed with high quality materials and insulating components, are designed to run cool as well as provide exceptional service life. Low rotor inertia and high starting torque capabilities allow for peak performance in the most difficult dynamic applications.

NORD motors are inverter and vector duty rated and designed to handle voltage spikes in accordance with NEMA MG 1-2009, Section 31.4.4.2. NORD offers standard-efficiency, high-efficiency and premium-efficiency motors designed to meet the latest global energy requirements. Motor options are numerous and include a wide variety of options such as brakes, thermal overload protection, space heaters, encoders, and forced cooling fans.

Close-Coupled Input Adapters (NEMA or IEC)

Modular worm gear reducers are offered with both NEMA or IEC motor input adapters. The worm pinion shaft includes a male gear spline and the c-face adapter utilizes a one-piece coupling sleeve to offer a compact or close-coupled design. The proprietary light-weight nylon coupling sleeve offers very high torsional stiffness, minimal backlash and low inertia. The coupling is easy to install and helps to eliminate motor misalignment and shaft fretting corrosion that are common with quill-type input adapters.

Send Quote Requests to info@automatedpt.com
Call +1(800)985-6929 To Order or Order Online At Nordgearmotors.com

INTRODUCTION

FLEXBLOC™ Ordering Guide

NORD DRIVESYSTEMS

	Gear Unit	FLEXBLOC™ Size	Reducer Options		Input Option	Motor	Motor Options
SK				-			

see pages 222 - 233

FLEXBLOC™ Design
1SI

FLEXBLOC™ Size
❍ 31
❍ 40
❍ 40/31
❍ 50
❍ 50/31
❍ 63
❍ 63/31
❍ 75
❍ 75/40

Shafts
❍ Inch
❍ Metric

Reducer Options
❒ **V -** Plug in Solid Output Shaft 📖 30
❍ VA ❍ VB ❍ Unassemled
❒ **L -** Double Solid Shaft Extension 📖 31
❒ **F -** B5 Output Flange 📖 31
❍ FA ❍ FB ❍ FF ❍ Unassembled
❒ **D -** Torque Arm 📖 31
❍ DA ❍ DB ❍ Unassembled
❒ **H -** Shaft Cover 📖 30
❍ HA ❍ HB ❍ Unassembled
❒ **B -** Fixing Kit
❒ **X -** Foot Plate 📖 31
❒ **J -** Shaft Bushing _____ size 📖 31
❒ **H10 -** Helical Input Stage (10:1) 📖 33

Input Shaft	NEMA Adapter	IEC
W	**N48C** **N56C** **N140TC** **N180TC**	**IEC 63** **IEC 71** **IEC 80** **IEC 90** **IEC 100** **IEC 112**

Motors	Premium Efficient Motors
63S/4 - 0.16hp	**80LP/4** - 1hp
63L/4 - 0.25hp	**90SP/4** - 1.5hp
71S/4 - 0.33hp	**90LP/4** - 2hp
71L/4 - 0.50hp	**100LP/4** - 3hp
80S/4 - 0.75hp	**112MP/4** - 5hp

Other Pole & Speed Options available

Product Specifications

Single Worm Ratio	Helical Worm (1SI_/H10) Ratio	Helical Worm (1SI_/H10) Position	Double Worm (1SI_/_) Ratio	Double Worm (1SI_/_) Position
❍ 5	❍ 50	❍ T1	❍ 150	❍ U1
❍ 7.5	❍ 75	❍ T2	❍ 225	❍ U2
❍ 10	❍ 100	❍ T3	❍ 300	❍ U3
❍ 12.5	❍ 125	❍ T4	❍ 375	❍ U4
❍ 15	❍ 150		❍ 450	❍ U5
❍ 20	❍ 200		❍ 600	❍ U6
❍ 25	❍ 250		❍ 750	❍ U7
❍ 30	❍ 300		❍ 900	❍ U8
❍ 40	❍ 400		❍ 1200	
❍ 50	❍ 500		❍ 1500	
❍ 60	❍ 600		❍ 1800	
❍ 80	❍ 800		❍ 2400	
❍ 100	❍ 1000		❍ 3000	

Paint
❍ No Paint (Standard)
❍ Stainless Steel Paint
❍ NSD+ (gray)
❍ NSD+W (white)
❍ NSD-X3 (gray)
❍ NSD-X3W (white)
❍ NSD^{tuph}
❍ Special _____

Torque Arm Orientation (If Selected)

❍ 90°
❍ 135°
❍ 180°
❍ 225°
❍ 270°
❍ 315°
❍ Other

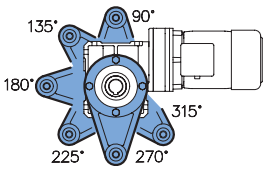

Torque Arm Orientation (If Selected)

❍ Side A
❍ Side B

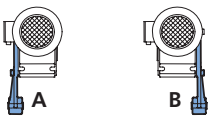

Gearmotor Only Details

Voltage & Frequency
❍ 208V-60Hz
❍ 230/460V-60Hz
❍ 575V-60Hz
❍ 400V-50Hz
❍ Other _____

Terminal Box Position
❍ KK1
❍ KK2
❍ KK3
❍ KK4

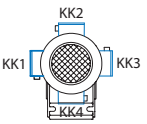

Conduit Entry Location

❍ I *
❍ II
❍ III *
❍ IV

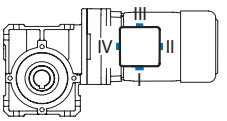

* Brakemotor options

Send Quote Requests to info@automatedpt.com
Call +1(800)985-6929 To Order or Order Online At Nordgearmotors.com

NORD DRIVESYSTEMS

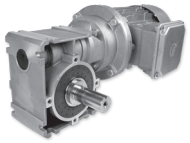

FLEXBLOC™ Ordering Examples

FLEXBLOC™ Units with Hollow Shaft

SK 1SI50 - N56C - 71S/4
Flexbloc Worm Unit
Hollow Shaft,
One Stage

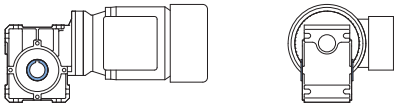

SK 1SI50F - N56C - 71S/4
Flexbloc Worm Unit
Hollow Shaft,
Flange Side A
One Stage

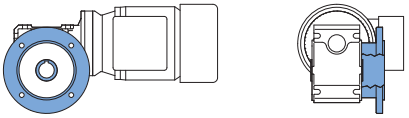

SK 1SI50D - N56C - 71S/4
Flexbloc Worm Unit
Hollow Shaft,
Torque Arm Side A
at 180°, One Stage

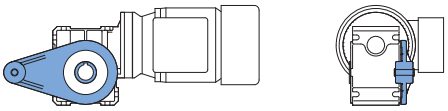

SK 1SI50/H10F - N56C - 71S/4
Flexbloc Worm Unit
Hollow Shaft,
Flange Side A,
Helical Input Stage T1,
Two Stages

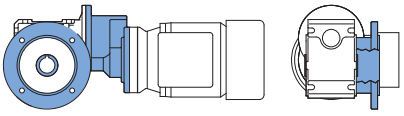

SK 1SI50/31 - N56C - 71S/4
Flexbloc Worm Unit
Hollow Shaft,
Double Worm U1,
Two Stages

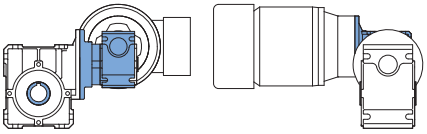

SK 1SI50H - N56C - 71S/4
Flexbloc Worm Unit
Hollow Shaft,
Shaft Cover Side A,
One Stage

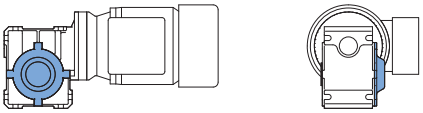

FLEXBLOC™ Units with Plug-In Solid Shaft

SK 1SI50V - N56C - 71S/4
Flexbloc Worm Unit
Solid Shaft Side A,
One Stage

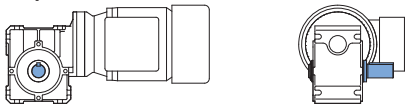

SK 1SI50VF - N56C - 71S/4
Flexbloc Worm Unit
Solid Shaft Side A,
Flange Side A
One Stage

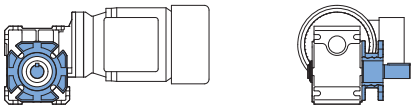

SK 1SI50L - N56C - 71S/4
Flexbloc Worm Unit
Double Solid Shaft,
One Stage

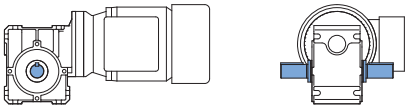

SK 1SI50/H10V - N56C - 71S/4
Flexbloc Worm Unit
Solid Shaft Side B,
Helical Input Stage T1,
Two Stages

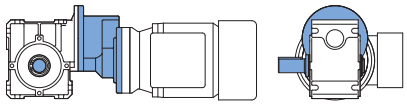

SK 1SI50/31VF - N56C - 71S/4
Flexbloc Worm Unit
Solid Shaft Side A,
Flange Side B,
Double Worm U1,
Two Stages

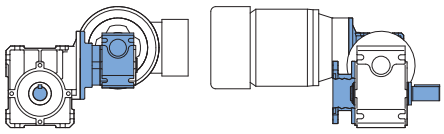

SK 1SI50VH - N56C - 71S/4
Flexbloc Worm Unit
Solid Shaft Side B,
Shaft Cover Side A,
One Stage

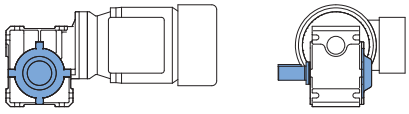

Send Quote Requests to info@automatedpt.com
Call +1(800)985-6929 To Order or Order Online At Nordgearmotors.com

MINICASE®
Ordering Guide

NORD DRIVESYSTEMS

	Gear Unit	MINICASE® Size	Reducer Options		Input	Motor	Motor Options
SK				-			

see pages 222 - 233

MINICASE® Design
1SMI
1SMID
2SMID

MINICASE® Size
❍ 31
❍ 40
❍ 40/31
❍ 50
❍ 50/31
❍ 63
❍ 63/31
❍ 75
❍ 75/40

Shafts
❍ Inch
❍ Metric

Reducer Options
❒ **A -** Hollow Output Shaft 📖 30
❒ **V -** Solid Output Shaft 📖 30
❍ VA ❍ VB ❍ Unassembled
❒ **L -** Double Solid Shaft Extension 📖 31
❒ **X -** Footed Housing 📖 31
❒ **Z -** B14 Flanged Housing 📖 31
❒ **F -** B5 Output Flange 📖 31
❍ FA ❍ FB ❍ FF ❍ Unassembled
❒ **D -** Torque Arm 📖 31
❍ DA ❍ DB ❍ Unassembled
❒ **H -** Shaft Cover 📖 30
❍ HA ❍ HB ❍ Unassembled
❒ **B -** Fixing Kit
❒ **J -** Shaft Bushing ____ size 📖 31
❒ **H10 -** Helical Input Stage 📖 33

Input Shaft	NEMA Adapter	IEC
W	**N48C** **N56C** **N140TC** **N180TC**	**IEC 63** **IEC 71** **IEC 80** **IEC 90** **IEC 100** **IEC 112**

Motors	Premium Efficient
63S/4 - 0.16hp **63L/4** - 0.25hp **71S/4** - 0.33hp **71L/4** - 0.50hp **80S/4** - 0.75hp	**80LP/4** - 1hp **90SP/4** - 1.5hp **90LP/4** - 2hp **100LP/4** - 3hp **112MP/4** - 5hp
Other Pole & Speeds Available	

Product Specifications

Mounting Position

- ❍ M1
- ❍ M2
- ❍ M3
- ❍ M4
- ❍ M5
- ❍ M6
- ❍ Special _____

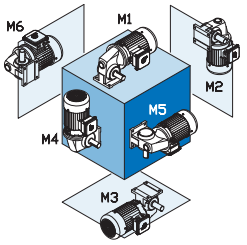

Paint

- ❍ No Paint (Standard)
- ❍ Stainless Steel Paint
- ❍ NSD+ (gray)
- ❍ NSD+W (white)
- ❍ NSD-X3 (gray)
- ❍ NSD^{tuph}
- ❍ Special _____

Single Worm Ratio	Helical Worm (2SMID)	Helical Worm (1SMI_/H10) Ratio	Helical Worm (1SMI_/H10) Position	Double Worm (1SMIxx/xx) Ratio	Double Worm (1SMIxx/xx) Position
❍ 5	❍ 25	❍ 50	❍ T1	❍ 150	❍ U1
❍ 7.5	❍ 37.5	❍ 75	❍ T2	❍ 225	❍ U2
❍ 10	❍ 50	❍ 100	❍ T3	❍ 300	❍ U3
❍ 12.5	❍ 62.5	❍ 125	❍ T4	❍ 375	❍ U4
❍ 15	❍ 75	❍ 150		❍ 450	❍ U5
❍ 20	❍ 100	❍ 200		❍ 600	❍ U6
❍ 25	❍ 125	❍ 250		❍ 750	❍ U7
❍ 30	❍ 150	❍ 300		❍ 900	❍ U8
❍ 40	❍ 200	❍ 400		❍ 1200	
❍ 50	❍ 250	❍ 500		❍ 1500	
❍ 60	❍ 300	❍ 600		❍ 1800	
❍ 80	❍ 400	❍ 800		❍ 2400	
❍ 100	❍ 500	❍ 1000		❍ 3000	

Torque Arm Orientation (If Selected)

- ❍ 90°
- ❍ 135°
- ❍ 180°
- ❍ 225°
- ❍ 270°
- ❍ 315°
- ❍ Other

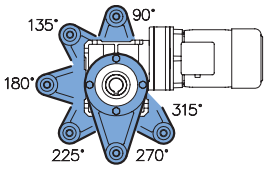

Torque Arm Orientation (If Selected)

- ❍ Side A
- ❍ Side B

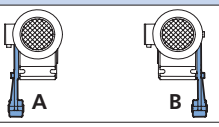

Gearmotor Only Details

Voltage & Frequency

- ❍ 230/460V-60Hz
- ❍ 575V-60Hz
- ❍ 400V-50Hz
- ❍ Other _____

Terminal Box Position

- ❍ KK1
- ❍ KK2
- ❍ KK3
- ❍ KK4

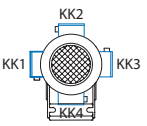

Conduit Entry Location

- ❍ I *
- ❍ II
- ❍ III *
- ❍ IV

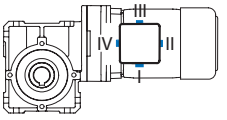

* Brakemotor options

Send Quote Requests to info@automatedpt.com
Call +1(800)985-6929 To Order or Order Online At Nordgearmotors.com

Send Quote Requests to info@automatedpt.com
Call +1(800)985-6929 To Order or Order Online At Nordgearmotors.com

MINICASE®
Ordering Examples

MINICASE®
Units with Solid Shaft Design

SK 1SMID50VX - 80 S/4
Minicase Worm Unit
Solid Shaft Side A,
Foot Mounted
One Stage

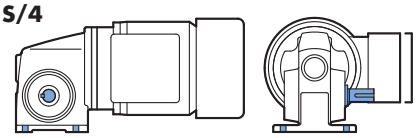

SK 1SMID50VF - 80 S/4
Minicase Worm Unit
Solid Shaft Side A,
B5 Flange Side A,
One Stage

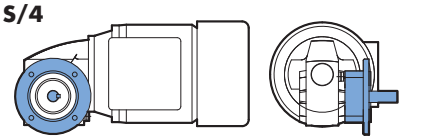

SK 1SMID50VZ - 80 S/4
Minicase Worm Unit
Solid Shaft Side A,
B14 Flange Side A,
One Stage

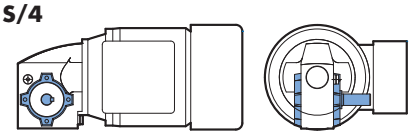

SK 1SMID50LX - 80 S/4
Minicase Worm Unit
Double Solid Shaft,
Foot Mounted
One Stage

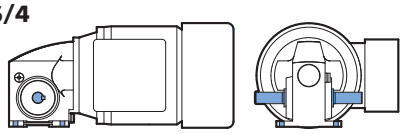

SK 2SMID50VX - 71 S/4
Minicase Worm Unit
Solid Shaft Side A,
Foot Mounted
5:1 Helical Input
Integral Motor Only

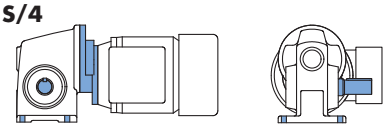

SK 1SMI50 - H10VX - 56C
Minicase Worm Unit
Solid Shaft Side A,
Foot Mounted
10:1 Helical Input
56C Nema Input

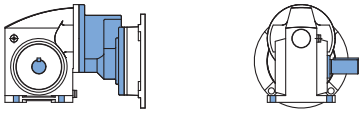

MINICASE®
Units with Hollow Shaft Design

SK 1SMID50AX - 80 S/4
Minicase Worm Unit
Hollow Shaft,
Foot Mounted
One Stage

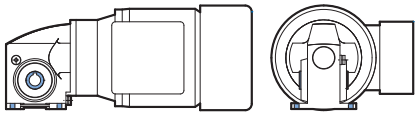

SK 1SMID50AZ - 80 S/4
Minicase Worm Unit
Hollow Shaft,
B14 Flange Side A,
One Stage

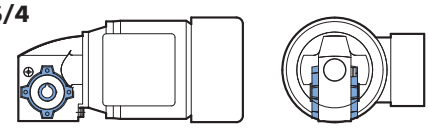

SK 1SMID50AF - 80 S/4
Minicase Worm Unit
Hollow Shaft,
B5 Flange Side A,
One Stage

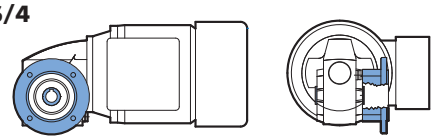

SK 1SMID50AZD - 80 S/4
Minicase Worm Unit
Hollow Shaft,
B14 Flange Side A,
Torque Arm Side A
at 180°, One Stage

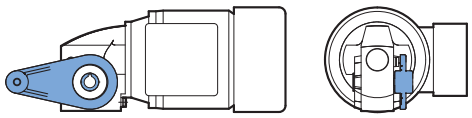

SK 2SMID50AX - 71 S/4
Minicase Worm Unit
Hollow Shaft,
Foot Mounted,
5:1 Helical Input
Integral Motor Only

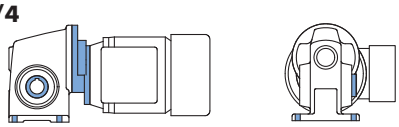

SK 1SMI50 - H10AF - 56C
Minicase Worm Unit
Hollow Shaft,
B5 Flange Side A
10:1 Helical Input
56C Nema Input

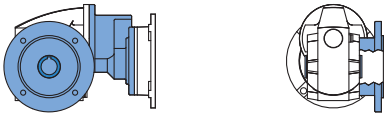

Send Quote Requests to info@automatedpt.com
Call +1(800)985-6929 To Order or Order Online At Nordgearmotors.com

Send Quote Requests to info@automatedpt.com
Call +1(800)985-6929 To Order or Order Online At Nordgearmotors.com

Motor Ordering Guide

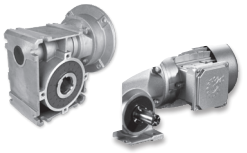

NORD DRIVESYSTEMS

	Frame	Size	Poles	Motor Options	Brake Size	Brake Options
SK						

Frame	Size	Poles
63	S	4
71	SH	2
80	SP	6
90	M	4-2
100	MH	8-2
112	MP	8-4
	MX	12-2
	L	Other
	LA	
	LH	
	LP	
	LX	

Paint

- ❍ Unpainted Aluminum Alloy
- ❍ Stainless Steel Paint
- ❍ NSD+ (gray)
- ❍ NSD+W (white)
- ❍ NSD-X3 (gray)
- ❍ NSD-X3W (white)
- ❍ Special _____

Electrical Motor Options

- ❒ **H** - Energy Efficient Motor
- ❒ **P** - Premium Efficient Motor
- ❒ **TW** - Thermostat
- ❒ **TF** - Thermistor
- ❒ **SH** - Space Heater (select voltage)
  - ❍ 110 Volt ❍ 230 Volt ❍ 460 Volt
- ❒ **ISO** H - Class H insulation
- ❒ **WU** - High Resistance Rotor
- ❒ **4-2** - 2-Speed, 4/2 Pole, 1800/3600rpm
- ❒ **8-2** - 2-Speed, 8/2 Pole, 900/3600rpm
- ❒ **ECR** - Single Phase Motor

Environmental Options

- ❒ **NSD+** - Nord Severe Duty Paint
- ❒ **NSDx3** - Nord Extreme Duty Paint
- ❒ **RD** - Canopy Drip Cover
- ❒ **RDD** - Double Fan Cover
- ❒ **KB** - Condensation Drain Holes (plugged)
- ❒ **KBO** - Condensation Drain Holes (open)
- ❒ **IP66** - IP66 Enclosure Protection
- ❒ **KKV** - Terminal Box Sealed with Resin
- ❒ **AICM** - Additional Insulation
- ❒ **EP** - Epoxy Dipped Windings

AC Vector Drive Related Options

- ❒ **F** - Blower Fan (200-575V 1 & 3 Phase)
- ❒ **FC** - Blower Cooling Fan (115V, 1 Phase)
- ❒ **IG__** - Incremental Encoder
- ❒ **IG__P** - Incremental Encoder with Plug
- ❒ **AG** - Absolute Encoder
- ❒ **MG** - Magnetic Encoder

Additional Motor Options

- ❒ **OL** - Totally Enclosed Non-Ventilated (TENV)
- ❒ **OL/H** - (TENV) Without Fan Cover
- ❒ **WE** - Second Shaft Extension (Fan Side)
- ❒ **HR** - Hand Wheel
- ❒ **Z** - High Inertia Cast Iron Fan
- ❒ **RLS** - Motor Backstop (rotation viewing fan)
  - ❍ Clockwise ❍ Counter-Clockwise
- ❒ **EKK** - Small Terminal Box (not UL approved)
- ❒ **MS** - Quick Power Plug Connector

Brake Size
BRE 5
BRE 10
BRE 20
BRE 40
BRE 60
BRE 100
BRE 150
BRE 250
BRE 400
BRE 800
BRE 1200

Brake Options

- ❒ **HL** - Hand Release Lever
- ❒ **FHL** - Locking Hand Release Lever
- ❒ **HLH** - Hand Release Lever with Hole
- ❒ **RG** - Corrosion Protected Brake
- ❒ **SR** - Dust and Corrosion Protected Brake
- ❒ **ADJ_____Nm** - Adjust Brake Torque
- ❒ **BIP66** - IP66 Brake Enclosure
- ❒ **MIK** - Micro-switch
- ❒ **BSH** - Brake Heating/Bifilar Coil
- ❒ **NRB1** - Quiet Brake Release
- ❒ **NRB2** - Quiet Brake Motor Operation
- ❒ **FBR** - Brass Foil
- ❒ **DBR** - Double Brake
- ❒ **G...P** - High Performance Rectifier
- ❒ **G...V** - Sealed Rectifier
- ❒ **IR** - Current Sensing Relay

Rectifier Selection

Rectifier Wiring

- ❍ Across the line (from motor terminal box)
- ❍ Separate power source (frequency AC vector drive, soft starter)

Brake Supply Voltage

- ❍ 24 VDC
- ❍ 115 VAC
- ❍ 200 VAC
- ❍ 230 VAC
- ❍ 400 VAC
- ❍ 460 VAC
- ❍ 500 VAC
- ❍ 575 VAC
- ❍ Other _____

Braking Method

- ❍ Method 10
- ❍ Method 15
- ❍ Method 20
- ❍ Method 25
- ❍ Method 30
- ❍ Method 35
- ❍ Method 40
- ❍ Method 45
- ❍ Method 50
- ❍ Method 55

Hand Release Position

- ❍ HL1
- ❍ HL2
- ❍ HL3
- ❍ HL4

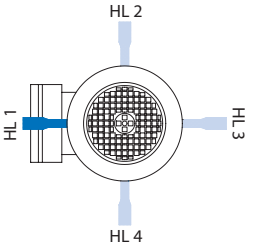

Mounting

- ❍ Integral to gearbox
- ❍ NEMA C-Face
- ❍ NEMA T-Footed
- ❍ IEC B5 Mount
- ❍ IEC B14 Mount
- ❍ IEC B3-Footed

Voltage & Frequency

- ❍ 230/460V-60Hz
- ❍ 575V-60Hz
- ❍ 208V-60Hz
- ❍ 400V-50Hz
- ❍ 115/230V, 60Hz-1-ph.
- ❍ Other

Terminal Box Pos.

- ❍ TB1
- ❍ TB2
- ❍ TB3
- ❍ TB4

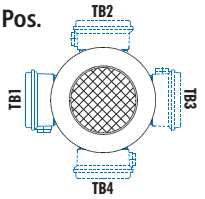

Mtg. Pos. M1 Shown

Conduit Entry Loc.

- ❍ CE I *
- ❍ CE II
- ❍ CE III *
- ❍ CE IV

*Brakemotor

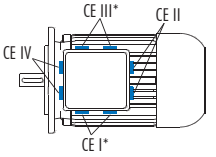

Mtg. Pos. M1 Shown

Send Quote Requests to info@automatedpt.com
Call +1(800)985-6929 To Order or Order Online At Nordgearmotors.com

Send Quote Requests to info@automatedpt.com
Call +1(800)985-6929 To Order or Order Online At Nordgearmotors.com

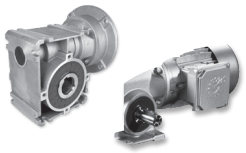

Worm Modularity with Ease

NORD's compact modular worm product offering includes both the FLEXBLOC™ (SI Series) worm gear with its universal housing and the MINICASE® (SMI Series) worm gear characterized by its smooth outer surface design and its separate foot-mount and flange-mount housings. Exceptional modularity and a unified set of accessory kits provide a complete set of input/output options and easy adaptation into a variety of mounting configurations.

FLEXBLOC™ worm modules and accessory kits are stocked at the factory to guarantee quick-shipment upon order; motorized units are commonly supplied with NEMA or IEC input and NORD motor or brakemotor. MINICASE® gearmotors and reducers are available with very short lead-times and are assembled from stocked parts; motorized units are commonly supplied with an integral motor or brakemotor or with a NEMA or IEC input and NORD motor.

Ordering Information

Our modular worm units are available to order in one of two ways:

1: Ordering by Component Kits

(FLEXBLOC™ units only)

Ordering by component part numbers allows for the ultimate design flexibility. This allows the user to assemble the modular components together in a fashion that best suits the application. NORD offers a price advantage when ordering as component kits since no assembly time is needed at the factory.

Component kits are ordered by the 8-digit part number in the catalog. Each component kit contains the required hardware and assembly instructions to assemble into a complete unit. Component kit availability forms are located on the following pages:

Unit	Pages
SK 1SI31	79
SK 1SI40	81
SK 1SI50	83
SK 1SI63	85
SK 1SI75	87

Example: Single reduction worm module SK 1SI50 with 20:1 reduction, 2 hp - 230/460V motor, and single extension plug-in solid shaft.

60592200 (SK 1SI50 module, ratio = 20:1)
60595500 (140TC NEMA motor adapter)
34610012 (90L/4-145TC motor, 2 hp, 230/460V)
60593010 (Plug-in shaft Ø1.00" x 50mm)

2: Ordering a completely assembled unit

(MINICASE® & FLEXBLOC™ units)

When ordering as a completely assembled unit you will need to specify the complete nomenclature and the total gearbox ratio. Additional information may be required depending on the input and output options that are selected. For a guide on ordering as a complete unit see page 6 & 8.

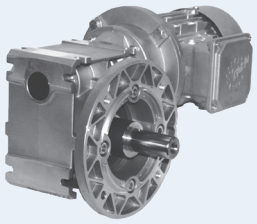

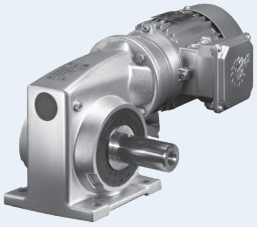

Example: Single reduction worm module with 50:1 ratio, 1 hp motor 230/460V with terminal box position 1, and conduit entry location I, plug-in solid shaft side A, B5 flange side A.

Order a FLEXBLOC™ UNIT as:
SK 1SI50 VF – N56C – 80L/4, 50:1, VA, FA, KK1/I

Order a MINICASE® UNIT as:
SK 1SMI50 AX – 80L/4, 50:1, VA, FA, KK1/I

Send Quote Requests to info@automatedpt.com
Call +1(800)985-6929 To Order or Order Online At Nordgearmotors.com

Send Quote Requests to info@automatedpt.com Call +1(800)985-6929 To Order or Order Online At Nordgearmotors.com

Selection Information

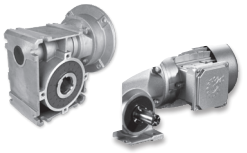

Gearbox Selection

A number of factors are considered when selecting a gear unit, including gearbox rating, service factor, speed and speed variation, horsepower, thermal capacity, ratio, physical size, ambient conditions and cost. Below are some guideline steps to help aid in the gear unit selection.

1. Determine the speed and/or gear ratio
2. Determine the required power or torque
3. Determine Service Factor
4. Select the basic gearbox type and input
5. Determine the required mounting position
6. Select options
7. Checks – overhung load, thrust load, NEMA motor weight, thermal considerations, and other application considerations

1. Speed and Gear Ratio

The first step in selecting a gear unit is determining the final output speed or speeds you need. This speed is normally described in revolutions per minute (rpm). The output speed or speeds are determined by the input speed to the gear unit divided by its gear ratio. Their relationship is described by the following formulas.

$$i \text{ (gear ratio)} = \frac{\text{Input speed [rpm]}}{\text{Output speed [rpm]}}$$

$$\text{Output speed [rpm]} = \frac{\text{Input speed [rpm]}}{i \text{ (gear ratio)}}$$

To specify a gear unit, you can identify either gear ratio needed or the output speed (rpm) if the input speed is known.

2. Power and Torque

The second step for selecting a gear unit is the required power or torque needed to power the load. Torque in this catalog is normally expressed in pound-inches [lb-in].

$$\text{Power [hp]} = \frac{\text{Torque [lb-in] x speed [rpm]}}{63025}$$

$$\text{Torque [lb-in]} = \frac{\text{Power [hp] x 63025}}{\text{speed [rpm]}}$$

For a proper selection you must ensure that the motor or other prime mover can produce enough torque or power and that the gear unit has adequate torque or power capacity.

To specify a gear unit you can identify torque or power.

3. Service Factor or Service Class

Service factors help ensure reliability and adequate service life in operation by providing the selected gear unit with the extra capacity needed to compensate for operation time, duty cycle, starting conditions and various overload conditions that may be momentary, periodic, quasi-steady state or vibratory in nature. Gear units are typicaly selected by multiplying the power or load torque at the reducer by the service factor.

For example, a gear unit selected for 24 hour per day operation would normally require a larger service factor than a unit expected to run 8 hours per day. In addition, a gear unit for shredder or a rock crusher should require a higher service factor than a gear unit powering a fan.

Service factor and service class tables have served the gear industry well for a number of years when used by knowledgeable and experienced machine builders and gear industry experts. There are several methods of applying service factor.

Customer or User Specification

Many equipment builders or end users will have their own service factor guidelines or specifications based upon their own experiences with a given gear reducer application.

AGMA Service Factoring & Service Classes

The American Gear Manufacturers Association (AGMA) publishes lists of recommended service factors and service classes in AGMA standards 6013 and 6113. General Information and abbreviated versions of these tables are located on Page 333 - 340.

Both the service factor and service class tables have been determined form the experience of many gear manufacturers over several years. AGMA Service Class is correlated to AGMA Service Factor in the following table:

AGMA Service Class	Minimum Service Factor	Service Factor Range
I	1.0	1.00 to 1.39
II	1.4	1.40 to 1.99
III	2.0	2.00 and above

Send Quote Requests to info@automatedpt.com
Call +1(800)985-6929 To Order or Order Online At Nordgearmotors.com

Send Quote Requests to info@automatedpt.com
Call +1(800)985-6929 To Order or Order Online At Nordgearmotors.com

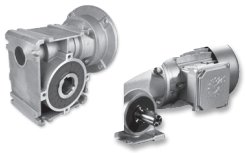

NORD Mass Acceleration Service Factoring

NORD often uses a calculation based method to properly assign a service factor. This method requires that one determines the Mass Acceleration Factor which is calculated by dividing the ratio of the total systems inertia by the ratio of the total motor inertia.

As the mass acceleration factor increases more torque goes through the gear unit to start the load than what is required to start the motor and as a result produces more "shock" to the reducer. A mass acceleration factor of 2.0 indicates it takes 2 times more torque to accelerate the load than the motor.

This method quantifies the severity of the application and considers the hours of operation per day and the number of times the equipment is cycled to pick a service factor. See page 332 for additional detail.

4. Gearbox Type & Input

FLEXBLOC™ & MINICASE® gear drives are avaiable in the following mechanical configurations including:

- Foot mount
- Flange mount
- Shaft mount
- Foot mount with flange

NORD's modular design allows for a number of different inputs to be added to NORD reducers including:

- Integral motor or brakemotor
- NEMA-C and IEC motor adapter
- Solid input shaft (FLEXBLOC™ only)

5. Mounting Position

The gearbox mounting position is an important and often overlooked specification. Mounting position determines the optional vent plug location. (For vent plug compatibility please see page 21).

For units with integral motor assembly and built-to-order MINICASE® units the oil fill level is based upon mounting postion. NORD offers six basic mounting positions. If your application requires a variation from the six basic mounting positions, please contact NORD.

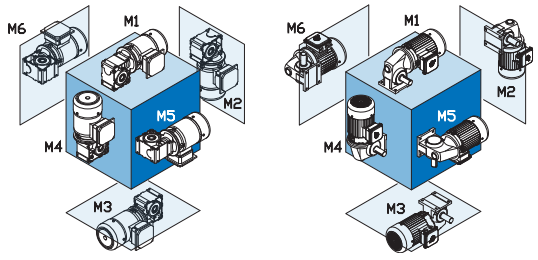

6. Options

NORD offers a number of mechanical, protective, and lubrication options for gear reducers and motors. Please see page 28 for gear unit options and refer to page 221 for motor options.

7. Checks

Overhung Load

An overhung or radial load exists when a force is applied at right-angles to a shaft beyond its outermost bearing. Pulleys, sheaves and sprockets will cause an overhung load when used as a power take-off. The amount of overhung load will vary, depending on the type of power take-off used and where it is located on the shaft.

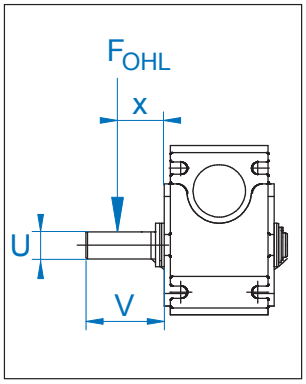

Calculated overhung load conditions should not exceed the gear unit's capacity in order to avoid a reduction in bearing life and to prevent conditions such as shaft fatigue. Check the applied overhung load condition (F_{OHL}) against the rated capacity by following the procedure in the Technical Section (page 19).

Axial Load Forces (Thrust Loads)

Loads that are directed towards or away from the gearbox along the axis of the shaft are called thrust or axial loads. Output shaft thrust capacity [F_A] can be found in the Technical Information Section (on page 20). Contact NORD for assistance when combined thrust and overhung load conditions exist.

Send Quote Requests to info@automatedpt.com
Call +1(800)985-6929 To Order or Order Online At Nordgearmotors.com

Send Quote Requests to info@automatedpt.com Call +1(800)985-6929 To Order or Order Online At Nordgearmotors.com

General Warnings & Cautions

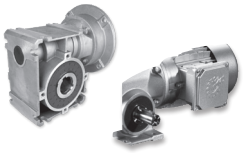

NORD DRIVESYSTEMS

Risk of Harm or Personal Injury

Applications where there is an inherant risk of harm or personal injury should be reviewed together with NORD.

Examples of these types of applications include hoists, lifts and many others, if you question the risk involved in your specific application, please do not hesitate to contact NORD for assitance.

NEMA C-Face Adapter Capacity

The NEMA adapters are designed to handle the torques produced by the standard NEMA power assignment at 4 pole (1800 rpm) motor speeds. NORD should be consulted if a NEMA adapter is being used for connecting something other than an AC induction motor, or if a larger motor power than those listed below is used.

Adapter	Max Power [hp]
48C	1/2
56C	1
140TC	2
180TC	5

Motor Adapter Weight Limits

When mounting a motor to a NEMA/IEC adapter it is important to consider the motor's weight. The following table includes the maximum motor weight that our motor adapters can support. If the motor exceeds the listed weight it must be externally supported. When a motor is mounted with an adapter and is externally supported, care must be taken to ensure that the support system does not impose additional pre-loads on the adapter.

NEMA Motor Weight Limit

Motor FRAME	56C	143TC	145TC	182TC	184TC
Max Weight [lb]	66	88	110	130	175

IEC Motor Weight Limit

Motor FRAME	63	71	80	90	100	112
Max Weight [lb]	55	66	88	110	130	175

Overload Conditions

Loads that exceed the gearbox ratings are considered overloads. An overload may either be momentary or periodic in duration, as well as quasi-steady or vibratory in nature. The load magnitude and the number of stress cycles need to be analyzed in order to prevent low-cycle fatigue or yield stress failure.

Refer the following load conditions to the factory:

- The peak momentary or starting load exceeds 200% percent of gear unit's rated capacity.
- Frequent load reversals occur and develop high peak torques during the changes in load direction.
- Heavy repetitive shock loads may occur.
- High-energy loads must be absorbed and high peak torques develop, such as when stalling conditions occur.

Oversized Prime Movers

High torque motors or oversized prime movers are sometimes needed to overcome high energy loads. Recommended operating service factors do not cover instances where oversized prime movers are required. These applications should be reviewed by the factory.

Thermal Capacity

To prevent breakdown and accelerated wear, it is important to observe the gear units thermal capacity limit. Through computer program analysis NORD can evaluate thermal capacity based upon specific operating conditions including: duty cycle, mounting position, gear unit type and ratio, operating load and speed.

Send Quote Requests to info@automatedpt.com
Call +1(800)985-6929 To Order or Order Online At Nordgearmotors.com

Send Quote Requests to info@automatedpt.com Call +1(800)985-6929 To Order or Order Online At Nordgearmotors.com

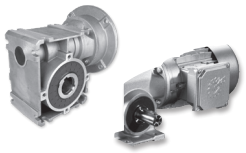

General Warnings & Cautions

Brake Equipped Applications

When a brake is either supplied between the motor and the prime mover or included with a motor, the gear drive must be selected by either the brake's rating or the highest equivalent input power, whichever is greater. If the brake rating is higher than 200% of the rated gear unit capacity, or if the brake is located on the output shaft of the gear drive, the application should be reviewed by the factory.

Wet or Damp Outdoor Installation

Special seals and anti-corrosion measures are required for installation outdoors, in wet or damp environments or in tropical climates.

Exposure to Solar Heating

If a drive is exposed to radiant or solar heating, while operating in the sun at ambient temperatures of 104°F (40°C) or higher, then special protection measures are recommended. This protection can consist of a canopy over the gear drive or reflective paint on the gear drive.

Storage Before Installation

The gear units and motors should be stored in a dry area before tehy are to be installed. Special measures are required for longer storage. Please request long term storage instructions from NORD Gear or find them on our website at www.nord.com.

Special Conditions & Applications

NORD has experience with many unique applications and has developed a number of design options to meet the requirements for a viariety of installations such as agitators, mixers, ventilators, fans, and cooling towers.

Please consult NORD when selecting a gear unit for special conditions or applications. Special conditions may include (but are not limited to):

- Operation that is continuous with frequent or high torque load conditions.
- Input operating speeds will exceed 1800 rpm.
- Gear units that will operate in higher ambient conditions exceeding 40°C (104°F).
- Gear units that will operate in low ambient conditions approaching 0°C (32°F) or lower.
- Extreme high or low temperatures or large temperature fluctuations.
- High atmospheric pressure.
- Vertical reducer configuration is needed. (special reducer options are often necessary)
- Exposure to very high relative humidity (installed outside, in damp rooms, or used in tropical environments).
- Material build-up on the gear unit or motor (dirt, dust, sand, etc.).
- Exposure to aggressive corrosive materials (contaminated air, gasses, acids, bases, salts, etc.).
- Direct contact between the motor and liquid.
- A high degree of environmental protection is required (special sealing, biodegradable oil, special maintenance and servicing needs, low noise, etc.).
- High vibration, rapid accelerations/decelerations, shock or impact such as those found when an external drive chain or belt is used.
- A large inertia or moving mass at the reducer output with a small gear ratio generating very high load conditions at the reducer's input.
- A direct gear drive connection to a mixer or fan shaft that produces high oscillating and bending movements as well as high load forces to the reducer drive shaft and internal bearings.

Send Quote Requests to info@automatedpt.com
Call +1(800)985-6929 To Order or Order Online At Nordgearmotors.com

Modular Worm Product Technical Information

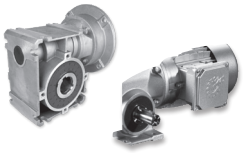

NORD DRIVESYSTEMS

Size Offering

The FLEXBLOC™ (SI) and MINICASE® (SMI) gear unit share the following common sizes.

Type	SK 1SIxx / SK1SMIxx (xx = mm, center distance)				
Center Distance	31 mm	40 mm	50 mm	63 mm	75 mm
	1.2 inch	1.6 inch	2.0 inch	2.5 inch	3.0 inch

Industry-Standard Worm Ratios

NORD FLEXBLOC™ and MINICASE® modular worm gear units cover a wide-range of industry-standard ratios from 5:1 to 100:1.

Standard Worm Ratios												
5	7.5	10	12.5	15	20	25	30	40	50	60	80	100

- By adding a helical pre-stage option standard ratios are expandable up to 1000:1.
- Compound configurations are easily assembled to create ratios up to 10,000:1.

Ratio Multiplier Options

NORD offers many options to multiply the basic worm ratio by utilizing either a helical pre-stage or a compound-worm assembly.

- Size 40, 50 and 63 FLEXBLOC™ and MINICASE® gear units can be extended to form 2-stage helical-worm gear units by adding the optional 10:1 helical gear stage module, resulting in ratios from 50:1 to 1000:1
- With integral or direct-mounted motors, the FLEXBLOC™ and MINICASE® gear unit sizes 40, 50 and 63 can be provided with a highly-compact 5:1 first-stage helical gear set, resulting in ratios from 25:1 to 500:1. FLEXBLOC™ units will be considered upon special request since these units are normally supplied with NEMA or IEC adapter.
- With both the FLEXBLOC™ and MINICASE® gear units, the appropriate double-worm adapter kit can be used to combine two worm units, forming sizes 40/31, 50/31, 63/41, or 75/40 with ratios as high as 10,000:1.

Speed Considerations

The modular worm gear units are designed for continuous operating input speed conditions up to 1800 rpm and are also suitable for short period or intermittent operation with a frequency inverter or vector drive at speeds above 1800 rpm.

Continuous operation at higher input speeds will reduce the life of the gear unit. Please consult with NORD if continuous input speeds above 1800 rpm or intermittant speeds above 2400 rpm are required.

Torque Capacity

The table below defines torque limits for each style of gear unit.

T_{max} : Represents the maximum permissible output torque based upon continuous operation and uniform loading; For adequate service life an appropriate service factor must still be applied to the gear unit selection. Actual torques vary by ratio.

T_{limit} : Represents the ultimate output torque limit at rest, or the short-term torque-limit, without causing damage to the gear unit; The ultimate torque limit is the absolute maximum condition and peak operating loads must never exceed this value. Actual torques vary by ratio.

Type Desgnations and Torques for NEMA/IEC Motor mounting

Type	NEMA/IEC motor mounting		Torque	
	FLEXBLOC™	MINICASE®	T_{max} ❶	T_{limit} ❶
Single-stage worm gear units	1SI31	1SMI31	266	664
	1SI40	1SMI40	443	1106
	1SI50	1SMI50	797	1991
	1SI63	1SMI63	1416	3540
	1SI75	1SMI75	2301	5753
Helical-Worm gear units 10:1 helical ratio	1SI40/H10	1SMI40/H10	717	1106
	1SI50/H10	1SMI50/H10	1292	1991
	1SI63/H10	1SMI63/H10	2301	3540
Double-Worm gear units	1SI40/31	1SMI40/31	876	1106
	1SI50/31	1SMI50/31	1575	1991
	1SI63/31	1SMI63/31	2797	3540
	1SI75/40	1SMI75/40	3779	5753

❶ Actual torques vary by ratio

Type Designations and Torques for Direct Motor mounting

Type	Direct motor mounting	Torque	
	MINICASE®	T_{max} ❶	T_{limit} ❶
Single-stage worm gear units	1SMID31	266	664
	1SMID40	443	1106
	1SMID50	797	1991
	1SMID63	1416	3540
	1SMID75	2301	5753
Helical-Worm gear units 5:1 helical ratio	2SMID40	876	1106
	2SMID50	1575	1991
	2SMID63	2197	3540
Double-Worm gear units	1SMID40/31	876	1106
	1SMID50/31	1575	1991
	1SMID63/31	2797	3540
	1SMID75/40	3779	5753

❶ Actual torques vary by ratio

Send Quote Requests to info@automatedpt.com
Call +1(800)985-6929 To Order or Order Online At Nordgearmotors.com

Send Quote Requests to info@automatedpt.com
Call +1(800)985-6929 To Order or Order Online At Nordgearmotors.com

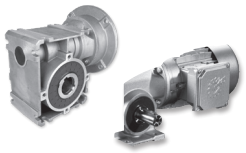

Efficiency

The high efficiencies of the modular worms are achieved by using extremely smooth tooth flanks and synthetic lubrication.

The efficiency of new gear unit increases up to the rated efficiency during initial operation as the worm gearing undergoes a natural run-in process. The power and torque figures listed in the selection tables are based on the rated efficiency (η) after the run-in process is complete.

Efficiencies [η%] - input speed = 1750 rpm													
Worm ratio	**5**	**7.5**	**10**	**12.5**	**15**	**20**	**25**	**30**	**40**	**50**	**60**	**80**	**100**
SK 1SI/SMI 31	87	83	80	71	72	68	65	56	51	47	43	37	33
SK 1SI/SMI 40	89	85	83	81	76	72	69	61	56	52	48	42	37
SK 1SI/SMI 50	91	88	86	84	80	77	74	66	62	58	54	48	43
SK 1SI/SMI 63	92	90	88	87	83	80	77	70	66	62	59	53	49
SK 1SI/SMI 75	93	91	90	89	85	83	81	70	70	67	64	59	54

The efficiency of worm gears increases with the input speed due to hydrodynamic lubrication within the gearing. Therefore the units have lower efficiency during start-up. This must be considered when sizing the motor for applications that require starting under load. The following table shows standard figures for the start-up efficiency, (η_s) based on the ratio.

Start-Up Efficiencies [η_s%] - input speed = 1750 rpm													
Worm ratio	5	7.5	10	12.5	15	20	25	30	40	50	60	80	100
SK 1SI/SMI 31 to SK1SI/SMI 75	72	67	62	59	53	47	43	36	31	27	25	20	17

Self-Locking and Self-Braking

Worm gear configurations are said to be **self-locking** (or irreversible) when the gear cannot drive the worm pinion. Self-locking occurs when torque applied directly from the output shaft can not cause the input shaft to turn from rest. In theory, self-locking occurs if the lead angle of the worm pinion gear is less than the calculated friction angle (or worm-mesh friction); when this condition occurs the efficiency for reverse driving is zero and the gear unit is therefore irreversible.

Worm gear configurations are said to be **self-braking** if the gear drive comes to a rapid stop from its full operating speed condition, with no noticeable coast-down period, once power is removed from the system (or the motor is turned off).

It is not possible to establish precise or reliable self-locking or self-braking conditions for a variety of reasons.

- The friction angle in the worm mesh decreases rapidly with the start of motion and once motion begins an external force is required to bring the system to a stop.
- Factors that affect the friction angle or amount of friction in the worm mesh may include: the worm lead angle, rotational speed, gear ratio, tooth geometry, gear and worm surface finish and hardness, temperature and type and condition of the lubricant.
- Vibrations from nearby sources, load pulsations and overhauling or back driving loads can upset the static condition of the gearing, reducing the friction angle to a point where motion can occur.

Self-Locking & Self-Braking Tendencies – Modular Worm Gears

Worm Ratio = 5 – 10	Worm Ratio = 15 – 40	Worm Ratio = 50 – 80	Worm Ratio = 100
No self-locking	No reliable self-locking	Self-locking at rest & without vibrations	Self-locking
No self-braking	No reliable self-braking	No reliable self-braking	Self-braking Input RPM < 1500 Size 31, 40, & 50

WARNING

- Due to the unpredictable nature of trying to predict reliable self-locking or self-braking, NORD does not recommend or approve of any worm gear speed reducer in any application where operational self-locking characteristics are relied upon to replace a static or dynamic brake.
- Non-self-locking gearboxes should be selected in applications where load-direction changes (or back-driving) occur during operation. Reducer back-driving can cause a sudden jamming or chatter vibration. This is especially true of applications where the torque used to accelerate the load is greater than the torque used to accelerate the motor (mass acceleration factor, m_{af} >1).
- In speed increaser applications, the slow speed shaft is the driver, and the high speed shaft is driven to an increased speed. For this type of application it is important that the selected gear unit does not exhibit any tendency towards self-locking or self-braking.
- When desired, the user is responsible for evaluating self-locking and self-braking characteristics for the specific in each application. NORD cannot ensure or predict reliable self-locking or self-braking in any given installation.

Send Quote Requests to info@automatedpt.com
Call +1(800)985-6929 To Order or Order Online At Nordgearmotors.com

Modular Worm Product Technical Information

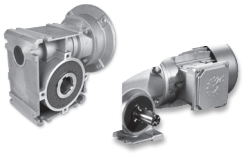

Output Shaft Support Bearings

FLEXBLOC™ and MINICASE® modular worm gear units are designed with oversized output shaft support bearings. Bearing sizes are significantly larger than our competition, providing a number of benefits:

- Longer bearing life.
- Ability to support higher overhung and thrust loads.
- Larger internal shaft diameters (increased output shaft strength).
- Larger hollow bore capacities.

Output Shaft Bearing Sizes

Size	SI/SMI31	SI/SMI40	SI/SMI50	SI/SMI63	SI/SMI75
Bearing	2 x 16005	2 x 6007	2 x 6208	2 x 6211	2 x 6213
Bearing ID	25 mm	35 mm	40 mm	55 mm	65 mm
Bearing OD	47 mm	62 mm	80 mm	90 mm	120 mm

Radial Overhung Load Forces

An overhung or radial load exists when a force is applied at right-angles to a shaft beyond the shaft's outermost bearing. Pulleys, sheaves and sprockets will cause an overhung load when used as a power take-off. The amount of overhung load will vary, depending on the type of power take-off used and where it is located on the shaft.

- Overhung load ratings are published with the acting force at the midpoint of the standard solid shaft extension.
- When the acting force is moved closer to the reducer or supporting bearing, the overhung load capacity goes up and one can expect an increase in bearing life and shaft durability.
- When the acting force is moved further away from the reducer or supporting bearing, the overhung load capacity goes down and one can expect a decrease in bearing life and shaft durability.

Radial Overhung Load Capacity

Overhung load capacity values for the output side of the gear unit are found in the selection tables (pages 43-75 & 125-167). The variables used to define overhung load rating are listed below:

F_R = the output shaft overhung load capacity for either the FLEXBLOC™ or MINICASE® with the plug-in shaft option or the single-solid-shaft that is supplied as the default for MINICASE®.

F_{RF} = the overhung load capacity for either FLEXBLOC™ or MINICASE® when a bolt-on (B5) output flange is used with the long plug-in shaft option or the long single-solid-shaft that is supplied as the default for MINICASE®.

F_{R1} = the overhung load at the center of a solid input shaft assembly (Type W). The capacity ratings are displayed in the table below.

Permissible Overhung Load Force (F_{R1}) at Input Shaft – Type W					
Size	SI/SMI31	SI/SMI40	SI/SMI50	SI/SMI63	SI/SMI75
F_{R1}	N/A	270 lb	270 lb	270 lb	340 lb

Send Quote Requests to info@automatedpt.com
Call +1(800)985-6929 To Order or Order Online At Nordgearmotors.com

Send Quote Requests to info@automatedpt.com Call +1(800)985-6929 To Order or Order Online At Nordgearmotors.com

Overhung Load Force Calculation

Calculated or applied overhung load conditions should not exceed the gear unit's capacity. Gear unit selections may be checked as follows:

I. Calculate the applied overhung load force (F_{OHL}):

Variable definitions

F_{OHL} or F_{OHL1}	=	Calculated shaft overhung load
T_2 or T_1	=	Torque [lb-in]
n_2 or n_1	=	Shaft speed [rpm]
P_1	=	Load power at input
η	=	Gear reducer efficiency [%] ❶
D_{OHL}	=	Pitch diameter of power transmission component [in]
f_z	=	Power transmission component factor

❶ Gear reducer efficiency is an important consideration when ordering worm gear units.

Output shaft equations

$$F_{OHL} = \frac{2 \times T_2}{d_{OHL}} \times f_z \text{ (common equation)}$$

$$F_{OHL} = \frac{2 \times P_1 \times 63025 \times \eta}{n_2 \times d_{OHL} \times 100} \times f_z \text{ (alternate equation)}$$

Input shaft equations

$$F_{OHL1} = \frac{2 \times P_1 \times 63025}{n_1 \times d_{OHL}} \times f_z \text{ (common equation)}$$

$$F_{OHL1} = \frac{2 \times T_1}{d_{OHL}} \times f_z \text{ (alternate equation)}$$

f_z factor table

Transmission Component	Factor f_z	Notes
Gear	1.00	17 teeth or less
Gear	1.15	18 teeth or more
Chain Sprocket	1.40	13 teeth or less
Chain Sprocket	1.20	13 to 20 teeth
Chain Sprocket	1.00	20 teeth or more
Timing Belt Pulley	1.50	-
V-Belt Pulley	1.70	-
Flat Belt Pulley	2.50	-

II. Make certain the calculated overhung load is less than the overhung load rating.

Output shaft overhung load ratings are provided in the gearmotor selection tables (pages 43-75 & 125-167). Input shaft (Type-W) overhung load ratings can be found in the Permissable Overhung Load Force table on the previous page.

IMPORTANT NOTE

Contact NORD for precise calculations in the following instances:

- For checking the actual bearing life based upon applied load conditions.
- If the applied load is not defined at the center of the solid shaft extension (this is especially important if the load is moved away from the shaft center).
- If combined radial and axial load conditions exist.

Send Quote Requests to info@automatedpt.com
Call +1(800)985-6929 To Order or Order Online At Nordgearmotors.com

Modular Worm Product Technical Information

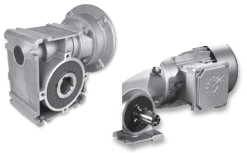

Axial Load Forces

FLEXBLOC™ and MINICASE® modular worm gear units are supported by oversized bearings; therefore, the NORD modular worm gear products can withstand OHL forces in addition to axial or thrust load forces.

Permissible Axial Force (F_A) at Output					
Size	SI/SMI31	SI/SMI40	SI/SMI50	SI/SMI63	SI/SMI75
F_A	405 lb	720 lb	1080 lb	1415 lb	1800 lb

IMPORTANT NOTE

It is advisable to contact NORD for precise calculations in the following instances:

- For checking the actual bearing life based upon applied load conditions.
- If combined radial and axial load conditions exist.

Direction of Rotation

The modular worm products have a right-hand worm helix producing a rotational relationship as displayed in the table below; this is an important consideration when determining the final direction of rotation of the gear set. The teeth of the worm pinion twist clockwise as they recede from an observer looking along the lengthwise shaft-axis, causing a clockwise rotation of the shaft when viewed from output-side A.

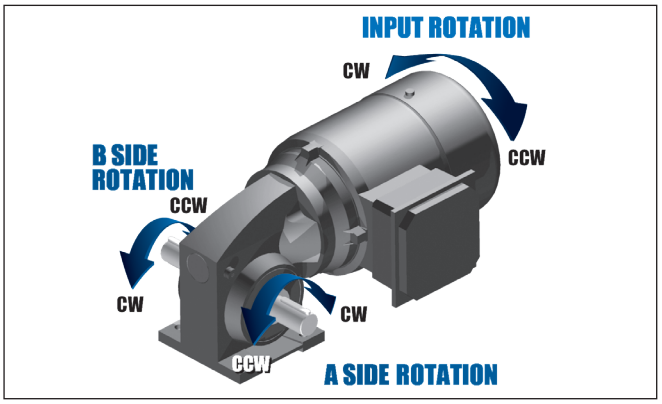

If The Input Shaft Rotation is:	Than Shaft Side A Rotation is:	Than Shaft side B Rotation is:
CW	CW	CCW
CCW	CCW	CW

Assembly of Shaft Mounted Gear Units & Plug-In Shaft Kits

When installing a shaft-mounted gear unit to a driven machine shaft, or when installing a plug-in shaft into one of the modular worm gear units, apply an anti-seize compound or anti-corrosive lubricant to the mating shafts as shown. Assembly and subsequent dismantling will be aided by the anti-seize agent.

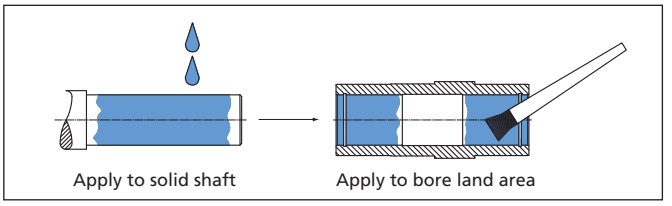

Centering of B5 Output Flange Kits

Standard B5 output flange kits are located off of the seal bore of the B14 flange housing. The shaft seal on the B14 flange surface must be pressed into the gear unit by the distance 'f'. The B5 output flange can be used as a tool in order to evenly press in the radial shaft seal.

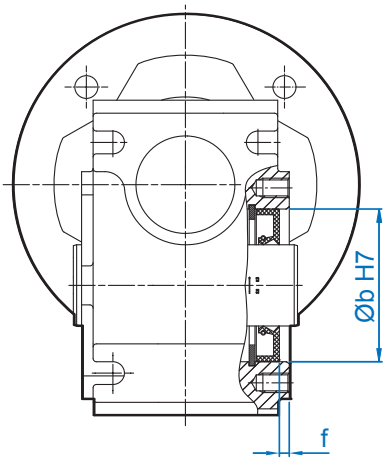

Centering of the output Flange

Size	SI/SMI31	SI/SMI40	SI/SMI50	SI/SMI63	SI/SMI75
ØbH7	47 mm	62 mm	80 mm	100 mm	120 mm
f	3 mm	3 mm	3 mm	4 mm	4 mm

Send Quote Requests to info@automatedpt.com
Call +1(800)985-6929 To Order or Order Online At Nordgearmotors.com

Send Quote Requests to info@automatedpt.com
Call +1(800)985-6929 To Order or Order Online At Nordgearmotors.com

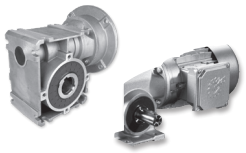

Importance of Proper Lubrication

Proper gearbox lubrication is essential in order to reduce friction, heat, and component wear. Lubricants reduce heat and wear by inserting a protective "fluid boundary" between mating parts and preventing direct metal to metal contact. Lubricants also help prevent corrosion and oxidation, minimize foam, improve heat transfer, optimize reducer efficiency, absorb shock loads and reduce noise.

Factory Oil-Filled / Maintence-Free

NORD modular worm gear units are inherently maintence-free, factory oil filled, and supplied with a high-quality, long-life, synthetic oil which is intend to be suitable for the life of the gear unit.

- FLEXBLOC™ worm gear units are stocked as pre-assembled worm gear modules and accessory kits. They are filled at time of assembly to a universal oil fill, allowing for many mounting position possibilities.
- MINICASE® worm gear units are assembled at the factory from stocked component parts. They are filled at time of assembly in accordance to the specified reducer mounting position.

Optional Vent Kits

FLEXBLOC™ and MINICASE® worm gear units are designed to operate sealed or vented. As a standard the modular worm gear units are factory oil filled and supplied with oil plugs in the housing, making vent plugs optional.

The worm gear units can be supplied with a vent for most installation conditions as indicated in the table below.

Mounting Positions and Vent Compatibility

	M1	M2	M3	M4	M5	M6
SI/SMI 31		✓	✓	✓		✓
SI/SMI 40		✓	✓	✓		✓
SI/SMI 50	✓	✓	✓	✓		✓
SI/SMI 63	✓	✓	✓	✓	✓	✓
SI/SMI 75	✓	✓	✓	✓		✓

Input speed ≤ 1800rpm

NORD can supply two types of vents as indicated. If a vent is desired, the type must be specified at the time of order.

AUTOVENT™

The AUTOVENT™ helps prevent bearing and gear damage by behaving like a check valve to block the entry of foreign material and prevent lubrication contamination from dust particles, moisture and airborne process chemicals. The breather opens at approximately 0.3-0.9 psi during operation and closes tightly as the gearbox cools. This option is perfect for humid conditions and wash-down environments, helping to maintain proper oil cleanliness, while reducing foaming and oxidation.

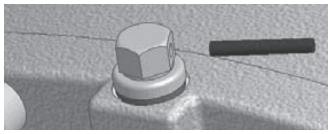

WARNING

To prevent build-up of excessive pressure, sealed vents must be activated as shown prior to gear unit start-up.

Open Vent

A typical gearbox industry open vent option can also be supplied by NORD. This option allows free exchange of air and does not build-up any back pressure inside the gear unit. This option is ideal for many operating conditions where the geared product is used in relatively clean and moisture-free environment.

The standard Open Vent comes with a transportation plug that must be activated or removed prior to gear unit start-up.

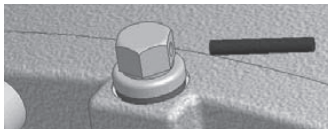

WARNING

To prevent build-up of excessive pressure, sealed vents must be activated as shown prior to gear unit start-up.

Send Quote Requests to info@automatedpt.com
Call +1(800)985-6929 To Order or Order Online At Nordgearmotors.com

Send Quote Requests to info@automatedpt.com
Call +1(800)985-6929 To Order or Order Online At Nordgearmotors.com

Modular Worm Product Technical Information

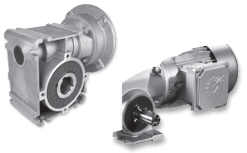

NORD DRIVESYSTEMS

When to Use a Sealed or a Vented Unit

There are many conditions that should be considered when deciding whether to use a sealed or vented unit.

1. If the duty cycle is intermittent, the run times are short, and any build-up of internal pressure or temperature is relatively low, the sealed unit option may be used.
2. If running continuous and under moderate to high load conditions, worm gears can generate higher operating temperatures and a build-up of internal pressure. In these instances a vent is strongly recommended. Consult NORD if operation at high load conditions is required.
3. If running continuous at 4-pole electric motor speeds (1800 rpm at 60 Hz) or higher, then a vent option is usually recommended. Consult NORD if operation at higher speeds is required.
4. Radial shaft seals produce a hydrodynamic pumping action to help push lubricant back into the gear unit, causing a small amount of ingested air and a small pressure increase (1-2 psi) that does not normally require a reducer vent; however when combined with continuous operation under high load (Condition 2), additional operating pressures will result and a vent should be used.
5. When the environment is contaminated with water, dirt, or other objects that may be ingested into the breather, increased wear of bearings, gearing, and lubrication breakdown may result. In these instances the sealed option or an AUTOVENT™ should be considered.

Maximum Oil Sump Temperature Limit

To prevent reducer overheating, the reducer's maximum oilsump temperature limit must not be exceeded for prolonged periods of operation.

Oil Type	Maximum Oil Temperature Limit	
	NORD	AGMA 9005-D94
Synthetic	105°C (220°F)	107°C (225°F)

IMPORTANT NOTE

Use caution when specifying gear reducers for high temperature service. If there is concern about exceeding the allowable safe operating temperatures, please consult NORD to discuss alternatives.

Oil Viscosity

The viscosity rating determines the operating oil's resistance to shear under load conditions. Some important viscosity considerations include the following:

- Lightly loaded gears require lower viscosity oils than highly loaded gears.
- Lower viscosity will provide thin oil film, lower friction, higher mechanical efficiency, and better heat removal conditions.
- Higher viscosity will provide thicker oil film, and better resistance to sliding wear, scuffing wear, and galling at high pressure.
- Higher operating temperatures will cause a reduction in viscosity and lower operating temperatures, cause an increase in viscosity or a thickening of the oil.

The standard oil-fill is considered acceptable for most applications. In certain situations an oil viscosity change may be beneficial.

- If the gear unit is exposed to frequent high load conditions. A higher viscosity oil will have a higher film thickness offering better overall resistance to oil shear, sliding wear and scuffing wear in gears and roller element bearings.
- An oil viscosity correction or lubrication change may improve the overall performance when operating the gear unit at very low or high ambient temperature conditions.

Viscosity Index

Viscosity index helps quantify the rate of oil viscosity change with respect to temperature changes. Oils with a reasonably high viscosity index tend to be more stable in a changing temperature environment. The ability of an oil to maintain a small viscosity differential over the operating range of the gearbox provides a more consistent lubricating film and better wear performance.

Synthetic oils typically have a higher viscosity index than mineral oils and polyglycol oils tend to have an exceptionally high viscosity index compared to other synthetic oils like polyalphaolefin or ester based products.

Send Quote Requests to info@automatedpt.com
Call +1(800)985-6929 To Order or Order Online At Nordgearmotors.com

Send Quote Requests to info@automatedpt.com Call +1(800)985-6929 To Order or Order Online At Nordgearmotors.com

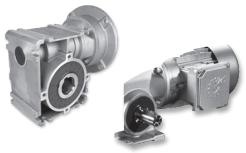

Modular Worm Product Lubrication Information

Oil Lubrication Types

Unit Type	ISO Viscosity	Oil Type	Ambient Temperature Range	Manufacturer Brand/Type	Notes
FLEXBLOC™ (inch Bore)	VG680	FG-PG	-5 to 40°C (23 to 104°F)	Klüber / Klübersynth UH 1 6-680	♦ Standard
FLEXBLOC™ (metric Bore)	VG680	PG	-20 to 40°C (-4 to 104°F)	Klüber / Klübersynth GH 6-680	♦ Standard
MINICASE®	VG680	PG	-20 to 40°C (-4 to 104°F)	Klüber / Klübersynth GH 6-680	♦ Standard
MINICASE®	VG680	FG-PG	-5 to 40°C (23 to 104°F)	Klüber / Klübersynth UH 1 6-680	♦ Optional

♦ Stocked Lubricant. Optional lubricants available upon request.

Oil Formulation Codes

PG - Synthetic Polyglycol Oil
FG-PG - Food-Grade, Synthetic Polyglycol Oil

Grease Options (applied to greased bearings and seal cavities)

NLGI Grade	Grease Thickener	Grease Base Oil	Ambient Temperature Range	Manufacturer Brand/Type	Notes
NLGI 2	Li-Complex	PAO	-25 to 80°C (-13 to 176°F)	Kluber / Petamo GHY133N	♦
	Aluminum	FG	-25 to 40°C (-13 to 104°F)	Kluber / Klubersynth UH1 14-151	•

IMPORTANT NOTES

- Ambient temperature range is a guideline only and should not imply the applicable service temperature range for the gear unit which is dependent upon the components used during assembly, their individual temperature limits, and the actual operating service conditions.
- The viscosity and other properties of a specific lubricant will change based upon ambient conditions, duty-cycle, load, speed, mounting position, and operating temperature of the gear unit.
- The oil-fill options indicated are considered appropriate for most typical worm gear applications. In instances where the gear unit is exposed to frequent high load conditions or the gear unit must operate under extreme low or high ambient temperature conditions, different oil types, viscosity grades, or selection recommendations may be appropriate.
- Avoid using (EP) gear oils in worm gears that contain sulfur-phosphorous chemistries, as these additives can react adversely with bronze worm gears and accelerate wear.
- Food grade lubricants must be in compliance with FDA 212 CFR 178.3570 and qualify as a NSF-H1 lubricant. Please consult with lubrication manufacturer for more information.
- When making a lubrication change, check with the lubrication supplier to assure compatibility and to obtain recommended cleaning or flushing procedures.
- Do not to mix different oils with different additive packages or different base oil formulation types. Polyglycol (PG) oils are not miscible with other oil types and should never be mixed with mineral or polyaolphaolefin (PAO) oils.

Send Quote Requests to info@automatedpt.com
Call +1(800)985-6929 To Order or Order Online At Nordgearmotors.com

Mounting Positions

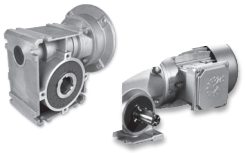

Mounting Positions

The gearbox mounting position is an important and often overlooked specification. NORD offers six basic mounting positions. If your application requires a variation from the six basic mounting positions, please contact NORD.

Mounting position helps determine the location of the optional vent plug. The oil fill level on MINICASE® gear units and any integral motor worm gear units will be determined by mounting position. FLEXBLOC™ gear units are supplied with a universal oil fill level for all mounting positions and motors are typically connected using a motor adapter (NEMA or IEC).

MINICASE®

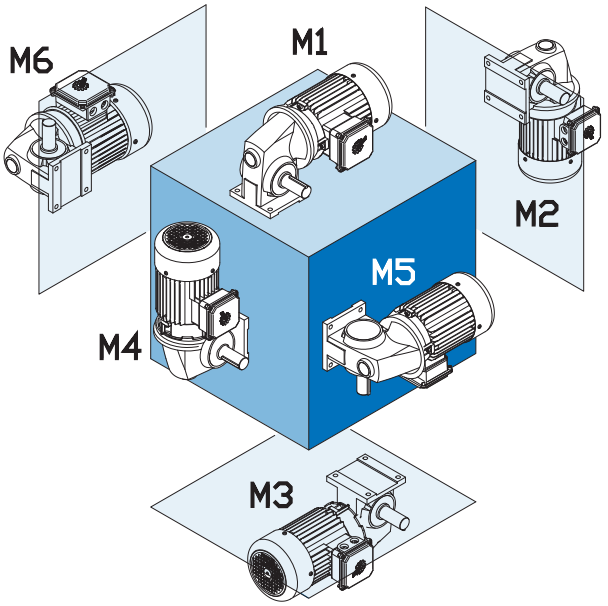

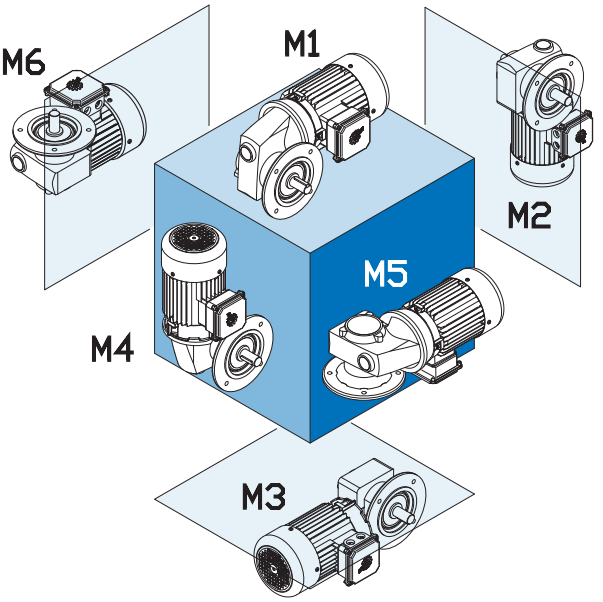

FLEXBLOC™

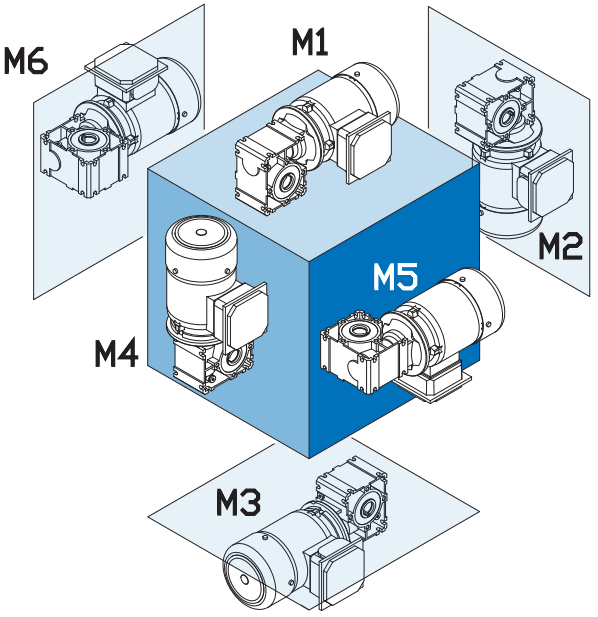

Send Quote Requests to info@automatedpt.com
Call +1(800)985-6929 To Order or Order Online At Nordgearmotors.com

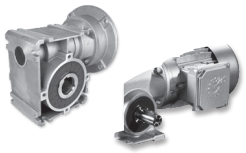

Mounting Configurations

Basic Design

Plug-in Shaft

VA

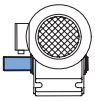

VB

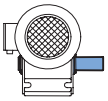

L

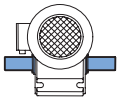

Flange

FA

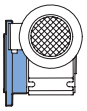

FB

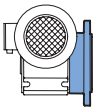

FF

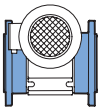

Torque Arm

DA/270

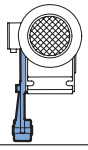

DB/270

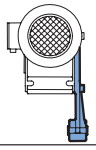

DA/90...315

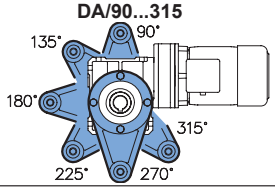

Shaft Cover

HA

HB

Helical Input Stage

T1

T2

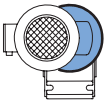

T3

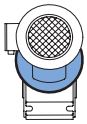

T4

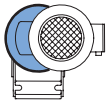

Double Worm

U1

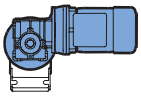

U2

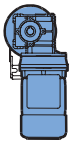

U3

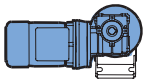

U4

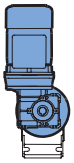

U5

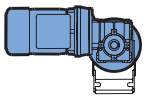

U6

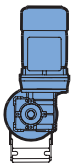

U7

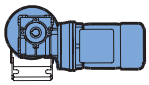

U8

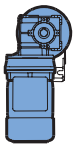

Terminal Box

KK1/I, KK2/I, KK3/I, KK4/I

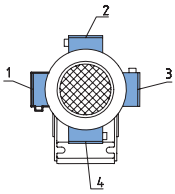

Cable Entry

KK1/I, KK1/II, KK1/III, KK1/IV

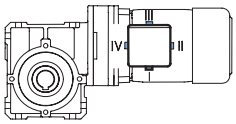

Send Quote Requests to info@automatedpt.com
Call +1(800)985-6929 To Order or Order Online At Nordgearmotors.com

NORD Worm Gear Modules

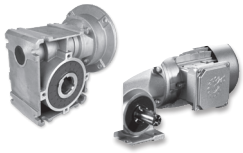

NEMA & IEC MOTOR ADAPTERS 📖32
For attaching standard motors
Kit contains:
- Adapter flange
- Coupling
- Nuts and bolts

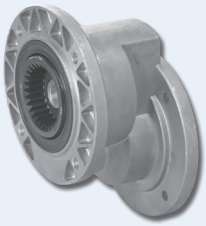

HELICAL INPUT STAGE (H10) 📖33
Helical 10:1 gear set
Fits all size gearboxes
Lifetime synthetic lubricant
Sealed unit
Kit contains:
- Pre-assembled unit
- Bolts

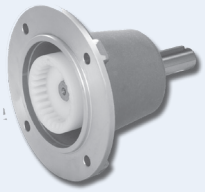

SOLID INPUT SHAFT (W) 📖32
Fits all size gearboxes
Lifetime lubricant
Sealed unit
Kit contains:
- Pre-assembled unit
- Bolts

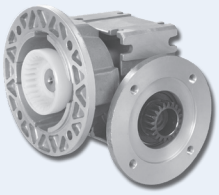

DOUBLE WORM ADAPTER 📖33
Mounts the SK 1SI31 to the input of the larger SK 1SI/SMI40 - 1SI/SMI75 to produce a high reduction double worm gear unit
Kit contains:
- Adapter flange
- Coupling
- Shaft
- Keys
- Bolts

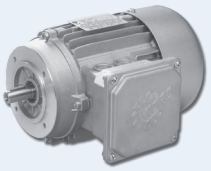

NORD C-FACE MOTORS & BRAKEMOTORS 📖32
3 phase, 230/460, 60 Hertz
3 phase, 575V, 60 Hertz
Options:
- Power off brake
- Numerous brake options
- Thermistor temp. sensors
- Thermostat temp. sensors
- Blower fan
- Encoders
- Space heater
- Canopy drip covers
- Encapsulated windings
- End bell drain holes

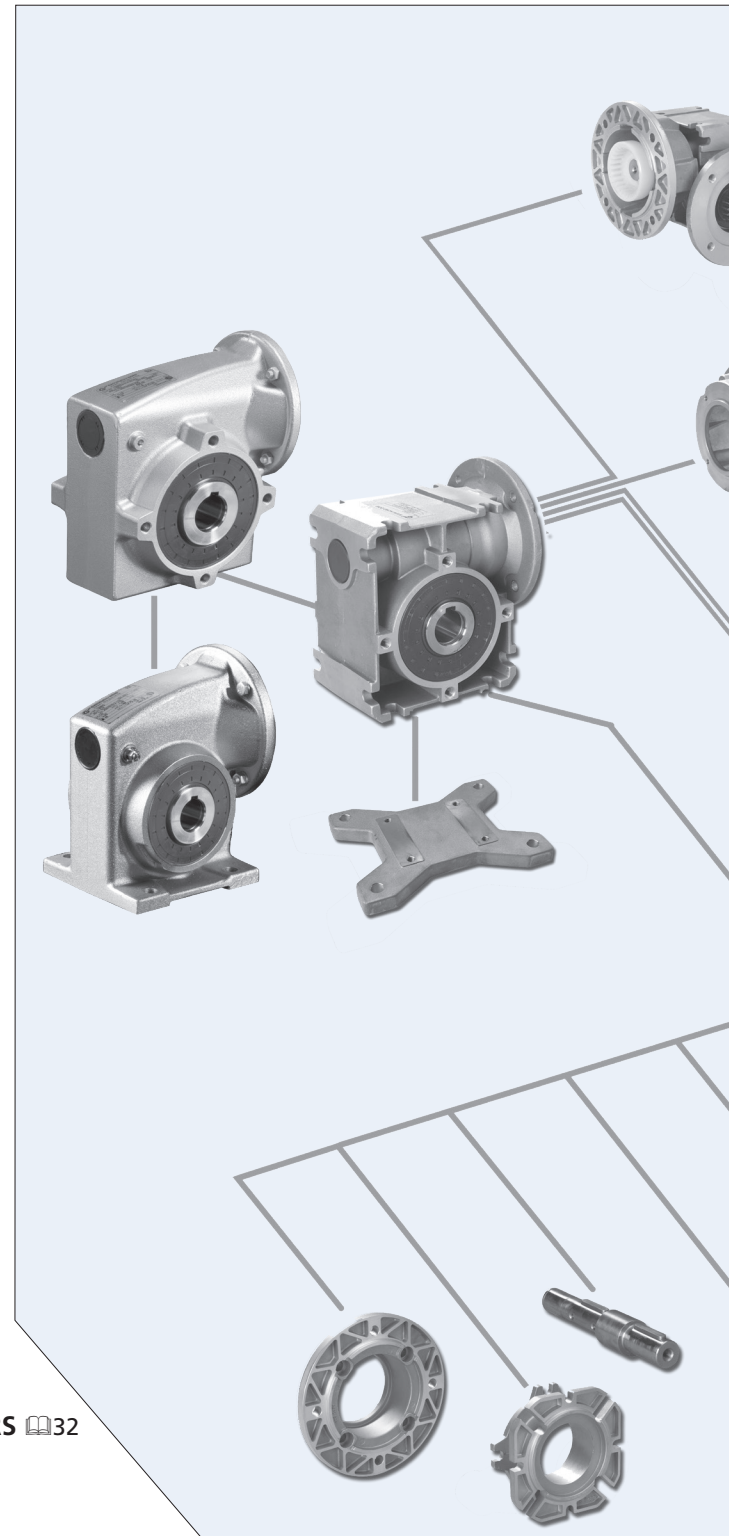

Send Quote Requests to info@automatedpt.com
Call +1(800)985-6929 To Order or Order Online At Nordgearmotors.com

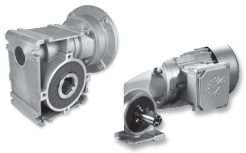

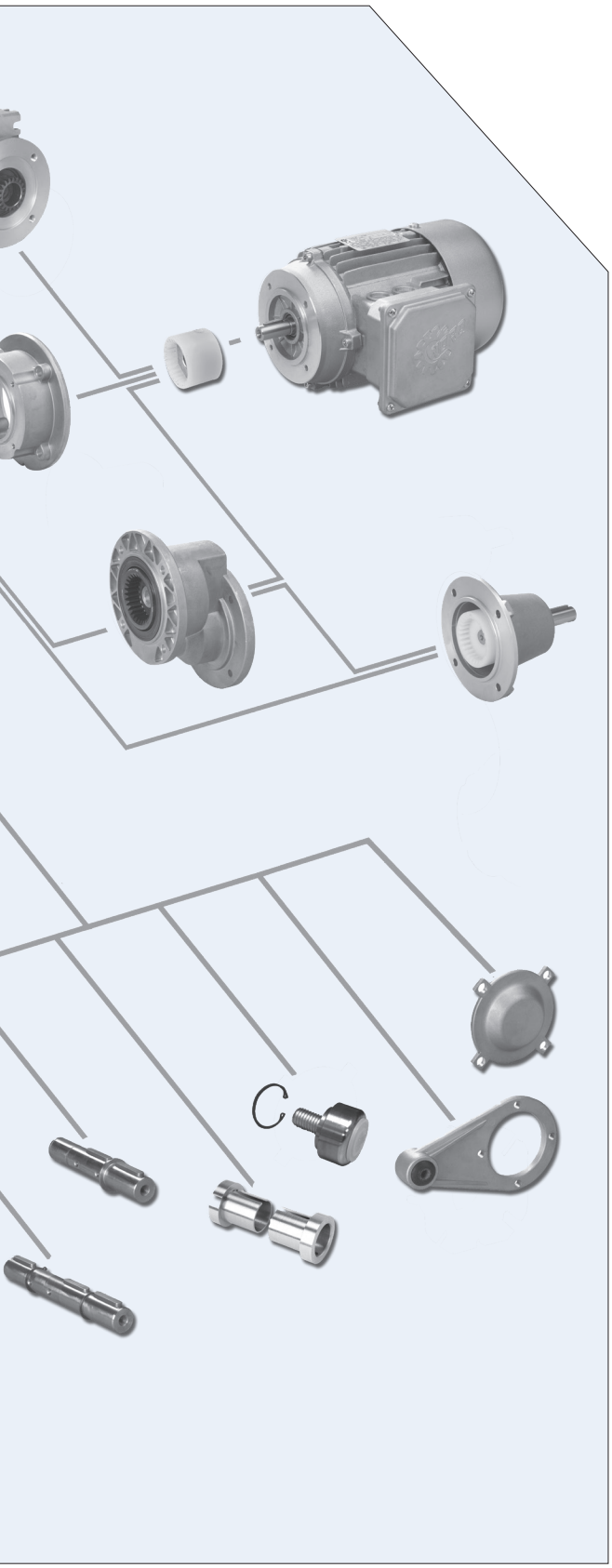

PLUG-IN SOLID SHAFT (V) (L) 📖30
Inch dimensions with standard keys
Plug into standard hollow shaft
Install on either side
Kit contains:
- Shaft
- Keys
- External snap ring

Options:
- Double solid shaft

B5 OUTPUT FLANGE (F) 📖31
Multiple flanges available for each size gearbox. Flange pilots are centered in seal bore.
Kit contains:
- Die cast flange
- Bolts

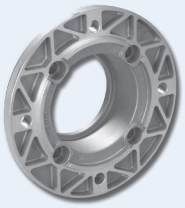

SHAFT PROTECTION COVER (H) 📖30
Seals shaft end Safety protection from rotating shaft
Kit contains:
- Cover
- Bolts

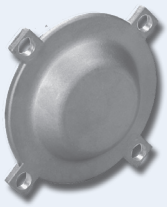

FOOT PLATE (X) 📖31
Mounts to the bottom of the FLEXBLOC™ to provide drop-in compatibility with many worm gear reducers.
Kit contains:
- Foot plate
- Bolts

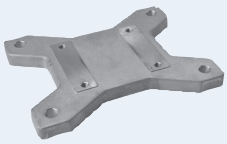

TORQUE ARM (D) 📖31
For shaft mounting
Rubber shock absorber installed in attachment end
Kit contains:
- Torque arm
- Bolts

SHAFT BUSHING (J) 📖30
Hollow shaft bushing for increased bore flexibility
- Bushings with set screw
- Key

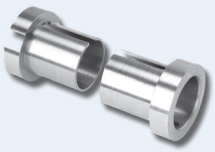

FIXING KIT (B) 📖32
Prevents axial movement of the reducer during operation
- Retaining Washer
- Cap Screw
- Snap Ring
- Plastic Cover

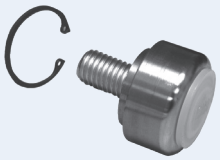

Send Quote Requests to info@automatedpt.com
Call +1(800)985-6929 To Order or Order Online At Nordgearmotors.com

FLEXBLOC™ Options & Compatability

NORD DRIVESYSTEMS

FLEXBLOC™ Reducer - Options Overview

Gear Unit Type	Description	FLEXBLOC™ Gear Unit Size					Page
		SI31	SI40	SI50	SI63	SI75	
SK 1SI__	FLEXBLOC™ worm (Universal foot and flange-mount housing)	X	X	X	X	X	-
Output Option	**Description**	**Compatability by Unit Type and Size**					
-	Keyed hollow-bore (standard)	X	X	X	X	X	30
V	Plug-in solid shaft (single-side)	X	X	X	X	X	32
L	Plug-in solid shaft (both sides)	X	X	X	X	X	31
F	Flange-kit (B5), keyed-hollow bore	X	X	X	X	X	31
VF	Flange-kit (B5), long plug-in shaft (single-side)	X	X	X	X	X	31
Flange Kit Options F or VF Units	Circular flange-kit (B5), male pilot **[I]**	X	X	X	X		-
	Square flange-kit (B5), female pilot **[II]**	X	X	X	X	X	-
	Square flange-kit (B5), male pilot **[III]**	X		X			-
	Circular flange-kit (B5), male pilot **[IV]**				X		-
D	Torque-arm (for shaft mounting gear unit)	X	X	X	X	X	31
H	Shaft cover	X	X	X	X	X	30
X	Foot-plate kit	X	X	X	X		31
J	Bushing kit (to reduce standard inch hollow-bores)			X	X	X	30
B✱	Fixing Kit	X	X	X	X	X	32
Input Option	**Description**	**Compatability by Unit Type and Size**					
N48C	NEMA 48C Motor Adapter	X					32
N56C	NEMA 56C Motor Adapter	X	X	X	X	X	32
N140TC	NEMA 140TC Motor Adapter		X	X	X	X	32
N180TC	NEMA 180TC Motor Adapter				X	X	32
IEC56	IEC56 Motor Adapter	X	X	X	X		32
IEC63	IEC63 Motor Adapter	X	X	X	X		32
IEC71	IEC71 Motor Adapter	X	X	X	X	X	32
IEC80	IEC80 Motor Adapter		X	X	X	X	32
IEC90	IEC90 Motor Adapter		X	X	X	X	32
IEC100	IEC100 Motor Adapter					X	32
IEC112	IEC112 Motor Adapter					X	32
W	Solid Input Shaft Adapter		X	X	X	X	32
SK 1SI__/**H10**	10:1 helical input		X	X	X		33
SK 1SI__/**31**	Compound-worm (Double-worm adapter kit)		X	X	X		33
SK 1SI__/**40**	Compound-worm (Double-worm adapter kit)					X	33
Additional Options	**Description**	**Compatability by Unit Type and Size**					
Vent	Reducer breather kit (optional)	X	X	X	X	X	33
Paint	Paint options (upon request)	X	X	X	X	X	34
NSD-Tuph	Sealed surface conversion	Consult NORD					35
Long Term Storage	Long term storage preperation	X	X	X	X	X	33

Plug-in solid shafts are standard for FLEXBLOC™ worm units.
✱ Not offered in combination with H (shaft cover) option

Send Quote Requests to info@automatedpt.com
Call +1(800)985-6929 To Order or Order Online At Nordgearmotors.com

Send Quote Requests to info@automatedpt.com Call +1(800)985-6929 To Order or Order Online At Nordgearmotors.com

MINICASE® Options & Compatability

MINICASE® Gearmotor - Options Overview

Gear Unit Type	Description	MINICASE® Unit Type and Size					Page
		SMI31	SMI40	SMI50	SMI63	SMI75	
SK 1SMID__	MINICASE® worm [D-Direct Mounted integral motor] (Smooth-bodied housing)	X	X	X	X	X	-
SK 1SMI__	MINICASE® worm [Modular Construction] (Smooth-bodied housing)	X	X	X	X	X	-
Housing Options	**Description**	**Compatability by Unit Type and Size**					
X	Footed Housing	X	X	X	X	X	-
Z	Flange Housing (B14)	X	X	X	X	X	-
Output Option	**Description**	**Compatability by Unit Type and Size**					
A	Keyed hollow-bore	X	X	X	X	X	30
V	Solid-shaft (single-side)	X	X	X	X	X	32
	Optional plug-In solid shaft (single-side)	X	X	X	X	X	32
L	Solid-shaft (both sides)	X	X	X	X	X	31
AF	Flange-housing, flange-kit (B5), hollow bore	X	X	X	X	X	31
VF	Flange-housing, flange-kit (B5), long solid shaft (single-side)	X	X	X	X	X	31
Flange Kit Options AF or VF Units	Circular flange-kit (B5), male pilot **[I]**	X	X	X	X	X	-
	Square flange-kit (B5), female pilot **[II]**	X	X	X	X	X	-
	Square flange-kit (B5), male pilot **[III]**	X		X			-
	Circular flange-kit (B5), male pilot **[IV]**				X		-
D	Torque Arm	X	X	X	X	X	31
H	Shaft cover	X	X	X	X	X	30
J	Bushing kit (to reduce standard inch hollow-bores)			X	X	X	30
B✱	Fixing Kit	X	X	X	X	X	32
Motor Option	**Frame Size**	**Compatability by Unit Type and Size**					
Standard Efficiency, High Efficency, & Premium Efficency	63S/4, 63L/4	X	X			*	32
	71S/4, 71L/4	X	X	X		*	32
	80S/4, 80L/4, 80SH/4, 80LH/4, 80LP/4		X	X	X	*	32
	90S/4, 90L/4, 90SH/4, 90LH/4, 90SP/4, 90LP/4			X	X	*	32
Input Option	**Description**	**Compatability by Unit Type and Size**					
N48C	NEMA 48C Motor Adapter	X					32
N56C	NEMA 56C Motor Adapter	X	X	X	X	X	32
N140TC	NEMA 140TC Motor Adapter		X	X	X	X	32
N180TC	NEMA 180TC Motor Adapter				X	X	32
IEC56	IEC56 Motor Adapter	X	X	X	X		32
IEC63	IEC63 Motor Adapter	X	X	X	X		32
IEC71	IEC71 Motor Adapter	X	X	X	X	X	32
IEC80	IEC80 Motor Adapter		X	X	X	X	32
IEC90	IEC90 Motor Adapter		X	X	X	X	32
IEC100	IEC100 Motor Adapter					X	32
IEC112	IEC112 Motor Adapter					X	32
W	Solid Input Shaft Adapter		X	X	X	X	32
SK **2**SMID__	MINICASE®,5:1 helical input stage, [Integral motor only]		X	X	X		33
SK1SIM__/**H10**	10:1 helical input [C-Face motor only]		X	X	X		33
SK 1SMI__/**31**	MINICASE® compound-worm (Double-worm adapter kit)		X	X	X		33
SK 1SMI__/**40**	MINICASE® compound-worm (Double-worm adapter kit)					X	33
Additional Options	**Description**	**Compatability by Unit Type and Size**					
Vent	Reducer breather kit (optional)	X	X	X	X	X	33
Paint	Paint options (upon request)	X	X	X	X	X	34
Long Term Storage	Long term storage preperation	X	X	X	X	X	33

One-piece solid-shaft design is standard for all MINICASE® worm gear units.
MINCASE® AX or AZ housing configurations, with the standard bore size will accommodate the FLEXBLOC™ plug-in style shafts.
*** Consider NEMA or IEC input with NORD motor. ✱ Not offered in combination with H (shaft cover) option**

Send Quote Requests to info@automatedpt.com
Call +1(800)985-6929 To Order or Order Online At Nordgearmotors.com

Modular Worm Options

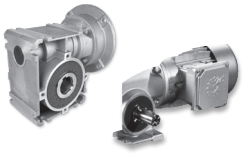

NORD DRIVESYSTEMS

Hollow Shafts (Standard)

Our modular worm gearboxes feature standardized hollow shafts. The key is not provided for hollow shaft reducers. Key sizes are provided in the table below. Several alternate bore size options are available for the MINICASE® gear units (page 207)

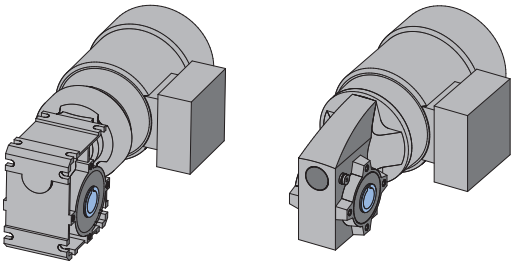

Standard Holow Shaft Bore Diameters					
Type	1SI/SMI31	1SI/SMI40	1SI/SMI50	1SI/SMI63	1SI/SMI75
Inch Key	3/16 x 3/16 x 5/8	1/4 x 1/4 x 1	1/4 x 1/4 x 1-1/8	3/8 x 3/8 x 1-7/16	1/2 x 3/8 x 1-15/16
mm Key	5 x 5 x 14	6 x 6 x 18	8 x 7 x 25	8 x 7 x 25	10 x 8 x 35

Hollow Shaft Bushing (J)

Hollow shaft bushing kits will work with FLEXBLOC™ and MINICASE® units with the standard inch hollow bore size. This option allows greater bore flexibility. A hollow shaft bushing kit contains two bushings, one for each side, with a set screw and key.

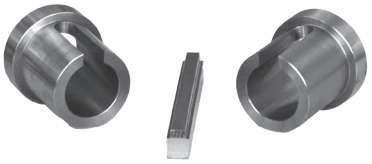

Type	Reducer Bore Diameter [In]	Bushing Bore Diameter [In]	Kit Part Number [In]
SK 1SI/SMI50	1-1/8	1	60593400
SK 1SI/SMI63	1-7/16	1	60693400
	1-7/16	1-1/4	60693420
SK 1SI/SMI75	1-15/16	1-3/16	60793430
	1-15/16	1-1/4	60793400
	1-15/16	1-7/16	60793420
	1-15/16	1-1/2	60793410

Solid Shaft (V)

The solid shaft comes as two seperate options depending on the worm unit itself. Standard FLEXBLOC™ product line is only available as a hollow bore gear unit with plug-in shafts. On all MINICASE® gear units we provide a single piece solid shaft as standard. You may also order your MINICASE® gear unit with a hollow bore that is provided with a plug-in shaft kit.

The plug-in solid shaft inserts into the standard hollow shaft worm module thus converting it to a solid output shaft unit. Three plug-in shaft options are available: single solid shaft extension, double solid shaft extension (L), and single solid shaft extension with a B5 flange (VF). The solid shaft can be assembled onto either side of the gear unit. The kit contains the shaft, keys, and snap rings.

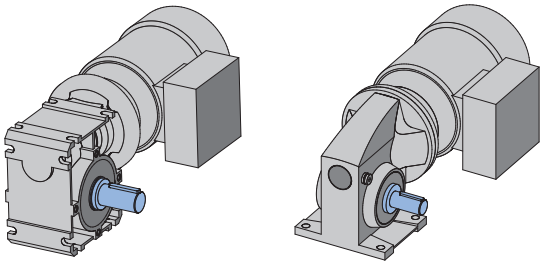

Standard Solid Shaft Diameter					
Type	1SI31	1SI40	1SI50	1SI63	1SI75
Dia. (In)	5/8	3/4	1	1-1/8	1-3/8
Dia. (mm)	14	18	25	25	35

Standard Solid Shaft Diameter					
Type	1SMI31	1SMI40	1SMI50	1SMI63	1SMI75
Dia. (In)	1/2	3/4	1	1-1/4	1-3/8
Dia. (mm)	14	18	25	25	35

Shaft Cover (H)

The shaft cover seals the shaft end & provides protection from the rotating shaft. The kit contains the cover and bolts and may be assembled to either side of the housing.

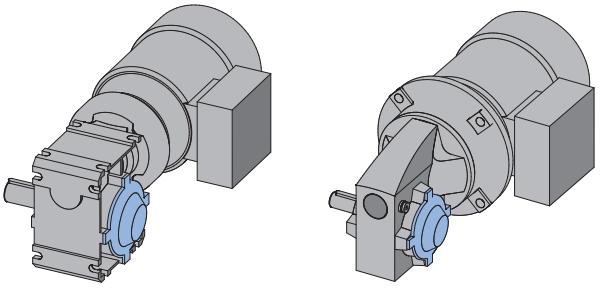

Send Quote Requests to info@automatedpt.com
Call +1(800)985-6929 To Order or Order Online At Nordgearmotors.com

Send Quote Requests to info@automatedpt.com
Call +1(800)985-6929 To Order or Order Online At Nordgearmotors.com

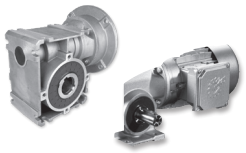

Modular Worm Options

Hollow Shaft with B5 Flange (AF)

A B5 flange provides a simple, large diameter mounting flange with clearance holes. Multiple B5 flanges are available for each gearbox size. The B5 flange kit contains the diecast aluminum flange and attachment bolts. The flange kits are centered off of the reducer seal bore (page 20).

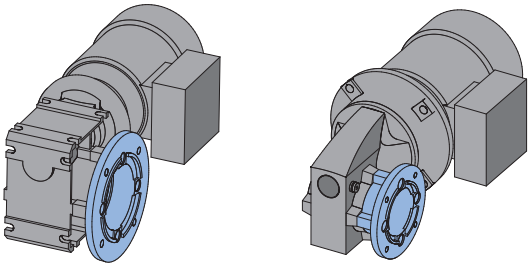

Solid Shaft with B5 Flange (VF)

Solid shafts that are provided with B5 flanges are extended so that the shoulder of the shaft lines up with the edge of the flange. Because of this the useable shaft length is accessable to be used however it is necessary.

Once again our MINICASE® gear units are provided with a single piece solid shaft as standard with the option of a plug-in shaft mode. Our FLEXBLOC™ units are provided solely as plug-in shaft models.

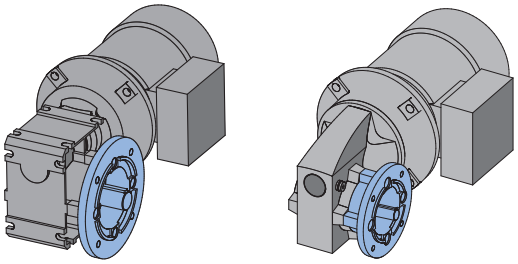

B14 Flange (Z)

The NORD B14 flange consists of threaded holes and a centering pilot machined into the reducer housing. It is commonly used to secure the reducer to the application machine base or to mount many bolt on components such as a B5 flange, torque arm, or shaft cover.

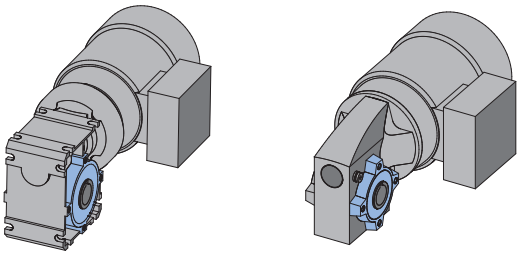

Double Solid Shaft (L)

The double solid plug-in shaft inserts into the standard hollow shaft worm module converting it into a unit with a solid shaft extension on both sides. The kit contains the shaft, keys, spacers and snap rings.

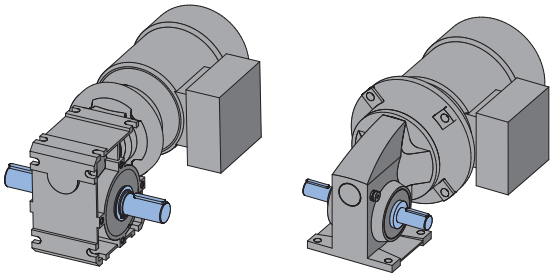

Torque Arm (D)

The torque arm is a compact and simple way to secure hollow shaft gear units. The NORD torque arm attaches to the B14 flange on either side of the housing module and can be rotated in 45 degree increments. The tear drop shaped torque arm contains a rubber bushing located at the fastening hole-end to act as an absorber reducing peak shock loads. The torque arm kit contains the torque arm, bushing, and attachment bolts.

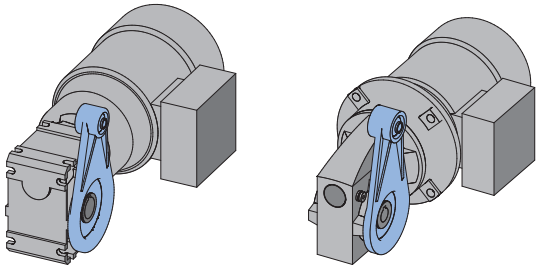

Foot Plate or Foot Housing (X)

The footplate mounts to the bottom of the FLEXBLOC™ module to provide drop-in compatibility with many competitor worm gear units. The footplate is available for all FLEXBLOC™ modules except the SK 1SI75.

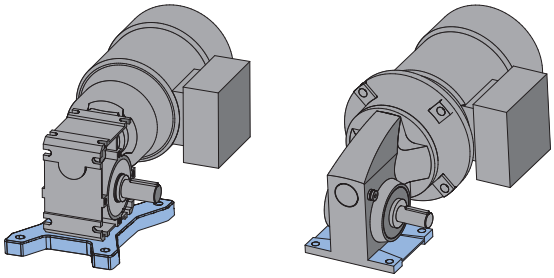

Send Quote Requests to info@automatedpt.com
Call +1(800)985-6929 To Order or Order Online At Nordgearmotors.com

Send Quote Requests to info@automatedpt.com
Call +1(800)985-6929 To Order or Order Online At Nordgearmotors.com

Modular Worm Options

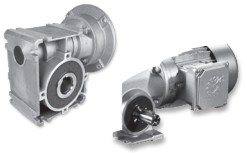

NEMA & IEC Motor Adapters (NEMA__ , IEC__)

Compact in length, the NEMA and IEC motor adapters allow for the attachment of standard NEMA motor sizes 48C thru 184TC and IEC sizes 56 thru 112. The motor adapter kit includes the flange, coupling and attachment hardware.

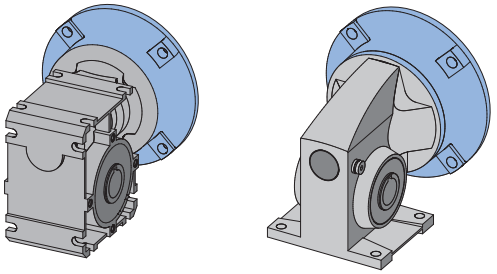

NORD C-Face and IEC Motors

High performance stocked NEMA C-face motors are offered in standard efficiency, energy efficient and brakemotor designs. They are available in 208V-60Hz, 230/460V-60Hz and 575V-60Hz design and are inverter duty. The NORD stock motors will bolt directly to the appropriate NEMA or IEC adapter and power the worm module. Part numbers for stock NEMA motors are on page 90 and page 168.

NORD will also assemble a NEMA C-face or IEC motor for your special requirements. We offer a range of environmental, electrical, inverter and brake and options that will suit your application. For more information on motor options see page 221.

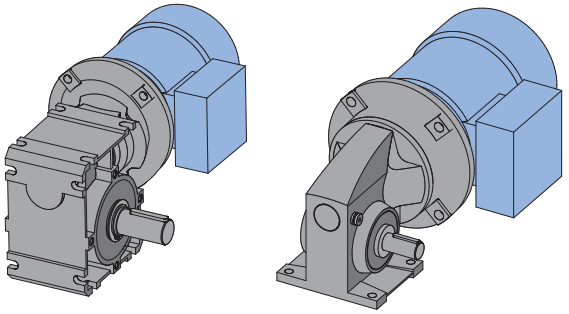

Solid Input Shaft (W)

Designed to mount couplings, sheaves or sprockets, which transfer torque from the prime mover; the NORD solid input shaft kit is available as inch or metric design. It is available for sizes SK 1SI/SMI40, SK 1SI/SMI50, SK 1SI/SMI63 and SK 1SI/SMI75. The solid input shaft attaches to the worm module, 10:1 helical input (H10) and double worm adapter. The solid input shaft kit contains the preassembled unit, bolts and has sealed for life bearing lubricant.

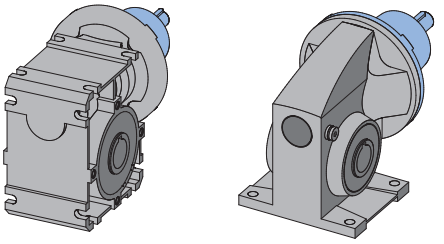

Fixing Kit (B)

Due to the slight oscillations inherent in any rotating shaft, NORD offers an optional “fixing element kit”. This is a method to prevent the reducer from “walking out” of position. The kit includes all necessary parts to secure the shaft in the axial direction by using a tapped hole in the end of the mating male shaft.

There are two methods for securing the fixing element kit. The first involves pulling the customer supplied male shaft to the snap ring (type 1) and the second method the customer supplied shaft is shouldered (type 2) and pulled against the hollow shaft and not the snap ring.

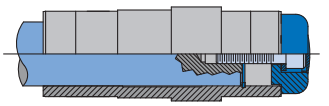

Snap Ring Fixed (Type 1)

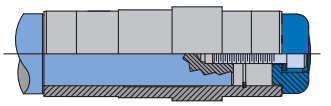

Shaft Shoulder Fixed (Type 2)

Send Quote Requests to info@automatedpt.com
Call +1(800)985-6929 To Order or Order Online At Nordgearmotors.com

Send Quote Requests to info@automatedpt.com
Call +1(800)985-6929 To Order or Order Online At Nordgearmotors.com

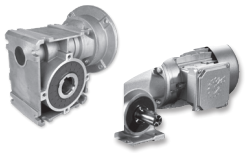

Modular Worm Options

5:1 Helical Input Stage

The 5:1 helical input stage provides a 5:1 helical gear ratio to increase the total ratio when applied to a gear module. The 5:1 is sealed for life with synthetic lubricant. The kit is available for the SK 1SMI40, SK 1SMI50, SK 1SMI63 and contains the preassembled unit and the attachment bolts. This option is only available with MINICASE® units when the motor is mounted directly (SMID).

10:1 Helical Input Stage (H10)

The H10 helical input stage provides a 10:1 helical gear ratio to increase the total ratio when applied to a gear module. The H10 is sealed for life with synthetic lubricant. The kit is available for the SK 1SI40, SK 1SI50, SK 1SI63 and contains the preassembled unit and the attachment bolts. This option is only available when the motor is mounted seperately (NEMA, IEC or W-input). See pages 114 and 202 for additional details.

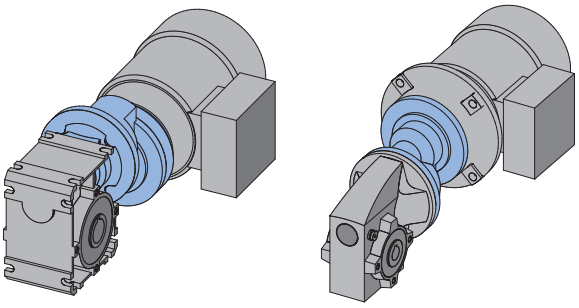

Double Worm Gear Units

The double worm adapter allows two worm modules to be assembled together to produce a high reduction double worm gear unit. The kit contains the adapter flange, coupling, shaft, keys and attachment bolts.

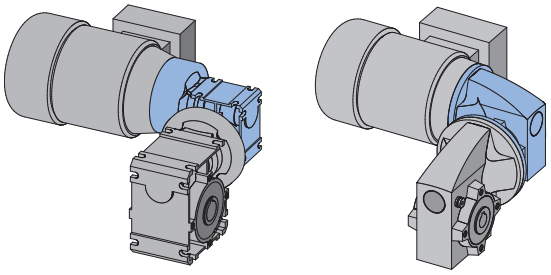

Long Term Storage (LL)

Speed reducers are frequently put in storage prior to installation for long periods of time and in some cases exposed to the elements. NORD's long term storage option protects the unit from moisture or corrosion by coating all unpainted surfaces with a dry, transparent, durable waxy film. Once installation is necessary this waxy film can be easily removed with a commercial de-greaser or petroleum solvent. If possible the store room should be vented and dry, with room temps between 23°F and 104 °F (-5 °C and 40 °C).

AUTOVENT™

The AUTOVENT™ helps prevent bearing and gear damage by behaving like a check valve to block the entry of foreign material and prevent lubrication contamination from dust particles, moisture and airborne process chemicals. The breather opens at approximately 0.3-0.9 psi during operation and closes tightly as the gearbox cools. This option is perfect for humid conditions and wash-down environments, helping to maintain proper oil cleanliness, while reducing foaming and oxidation.

Open Vent (OV)

Modular worm gear units are available with an optional open vent. An industry-typical open vent option can also be supplied by NORD. This option allows free exchange of air and does not build-up any back pressure inside the gear unit. This option is ideal for many operating conditions where the geared product is used in relatively clean and moisture-free environment.

Consult page 21 for a detailed description of both vent options and for recommendations as to when venting the gear unit is appropriate.

Type	Installation	Part Number
AUTOVENT™	Factory	220080561
Open Vent	Factory	22008004 (vent) 25308121 (gasket)
Open Vent	Field site	60693500 (No Transportation Plug)

Send Quote Requests to info@automatedpt.com
Call +1(800)985-6929 To Order or Order Online At Nordgearmotors.com

Modular Worm Options

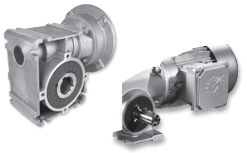

Paint Free Design

FLEXBLOC™ & MINICASE® housings are made from corrosion resistant die-cast aluminum alloy and feature a smooth body design. The aluminum alloy surfaces have natural corrosion protection; in many cases making paint optional.

Paint Coatings

NORD's standard paint coating is a two component, aliphatic polyurethane finish contaning 316 stainless steel material. This gray stainless steel paint has excellent appearance and outstanding physical properties. It is suitable for both indoor and outdoor applications.

Advantages of NORD's stainless steel two component polyurethane:

- Excellent adhesion to cast iron, aluminum, steel, and plastics
- Excellent corrosion resistance
- Excellent chemical resistance
- Excellent gloss and color retention
- Suitable for indoor and outdoor exposure
- Nonporous and excellent abrasion resistance
- Suitable for use in a USDA inspected facility

NORD also offers a variety of severe duty paint coatings that provide a high level of protection against water and severe environments both indoors and outdoors. NSD+ (NORD Severe Duty) consists of a primer undercoat and a stainless steel polyurethane topcoat. For the most demanding environments, NORD offers NSD-X3 (NORD Severe Duty triple coated) which consists of a primer undercoat, stainless steel polyurethane coating, and a clear topcoat. Paint coatings are also available in alternate colors as seen in the table below.

Additionally a variety of coating options are available including our Severe Duty coatings:

Finish	Color	Coating	Use
Standard (stainless steel paint)	Stainless steel silver (Gray)	1 x Stainless steel (316) top coat (polyurethane)	Indoor or outdoor moderate environment
Alternate color	Black, Blue, Red, Orange	1 x Color top coat (polyurethane)	Indoor or outdoor protected
NSD+			
NORD Severe Duty + NSD+	Stainless steel silver (Gray)	1 x Primer high solid alkyd system 1 x Stainless steel (316) top coat (polyurethane)	Indoor or outdoor moderate environment
NORD Severe Duty +W NSD+W	White	1 x Primer high solid alkyd system 1 x White top coat (polyurethane)	Indoor or outdoor moderate environment
Alternate color NSD+	Black, Blue, Red, Orange	1 x Primer high solid alkyd system 1 x Color top coat (polyurethane)	Indoor or outdoor moderate environment
NSD X3			
NORD Severe Duty Extreme NSD-X3	Stainless steel silver (Gray)	1 x Primer high solid alkyd system 1 x Stainless steel (316) (polyurethane) 1 x Clear top coat (polyurethane)	Indoor or outdoor more severe environment
NORD Severe Duty Extreme NSD-X3W	White	1 x Primer high solid alkyd system 1 x White (polyurethane) 1 x Clear top coat (polyurethane)	Indoor or outdoor more severe environment
Alternate color NSD-X3	Black, Blue, Red, Orange	1 x Primer high solid alkyd system 1 x Color (polyurethane) 1 x Clear top coat (polyurethane)	Indoor or outdoor more severe environment

Special colors and paints possible please contact NORD with your specific requirements.

Send Quote Requests to info@automatedpt.com
Call +1(800)985-6929 To Order or Order Online At Nordgearmotors.com

Send Quote Requests to info@automatedpt.com Call +1(800)985-6929 To Order or Order Online At Nordgearmotors.com

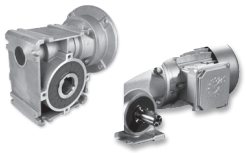

NSD TupH

As a leader in the power transmission industry, NORD Gear is committed to providing value to industries where end users demand durable equipment to withstand a variety of harsh environments. The market has long awaited a product with such a large range of standard reducers with the corrosive resistance properties of a stainless steel product without the excessive cost.

In response to these demands, NORD Gear has begun utilizing an electrically catalyzed process to create a uniform case depth protective surface with its existing aluminum alloy housing material. Combined with a sealer, NORD's corrosion resistant cleanable Sealed Surface Conversion system (NSD^{tupH}) allows existing aluminum alloy housings to be protected with a base finish that is 6X-7X harder than aluminum alloy. With its stainless steel hardware, optional stainless steel shafts, optional stainless steel motors and optional food grade lubricants, NORD's NSD^{tupH} is the optimal package for applications in a variety of incredibly harsh environments.

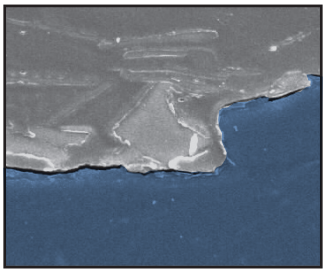

Paint simply lies on top of the substrate and may even bridge across pores in the metal. Since paint does not form a permanent bond to the substrate, it can easily release at very low stress levels.

Paint Aluminum Surface

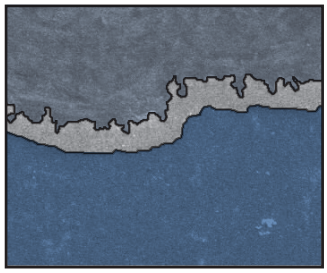

The NSD^{tupH} process includes a base layer that is permanently bonded to the substrate and provides a powerful foundation for adhesion of the surface sealant. This foundation provides excellent roughness, is 6-7x harder than the aluminum substrate and up to 1000x harder than paint.

Sealer Aluminum Surface

Surface Conversion

nsd tupH System Package

- Standard Electrolytic processed reducer housing
- Standard Stainless Steel Hardware
- Standard C-Face Gasket included
- Housings surfaces are self draining
- Food Grade H1 Synthetic Lubrication (optional)
- Stainless Steel output shafting (optional)
- Stainless Steel C-Face Inverter Duty motor up to 10HP (optional)
- 3 Year Warranty when supplied with synthetic lube

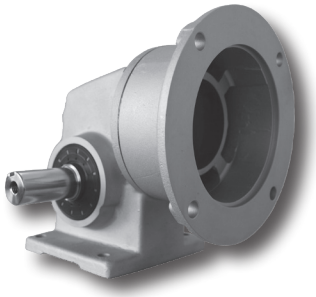

nsd tupH is Useful in Many Harsh Environments

(not limited to but including)

- Chemical wash down
- Damp and wet environments
- Marine / Coastal
- Food & Beverage industry
- Car Wash
- Dairy
- Pharmaceutical
- Water and waste treatment

Some of the Many Benefits of nsd tupH

- Cost effective alternate to stainless steel
- Corrosion resistance
- Chip resistance
- Non propagating from scratches or other blemishes
- Highly Cleanable low friction surface
- Non-porous
- Lighter than stainless
- Chemical resistant
- Elimination of galvanic corrosion
- Surface conversion is 1000X harder than paint

Send Quote Requests to info@automatedpt.com
Call +1(800)985-6929 To Order or Order Online At Nordgearmotors.com

Send Quote Requests to info@automatedpt.com
Call +1(800)985-6929 To Order or Order Online At Nordgearmotors.com

FLEXBLOC™ Configuration

NORD DRIVESYSTEMS

FLEXBLOC™ Worm Configuration

Basic Design

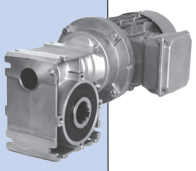

SK 1SI__
Basic Design

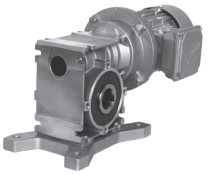

SK 1SI__X
Footplate

Plug-In Shaft

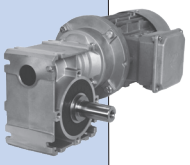

SK 1SI__V
Shaft Side A

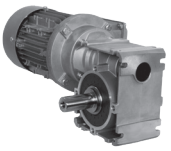

SK 1SI__V
Shaft Side B

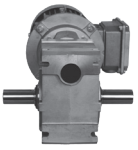

SK 1SI__L
Double Shaft

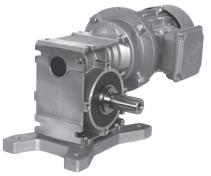

SK 1SI__VX
Shaft Side A, Footplate

Flange

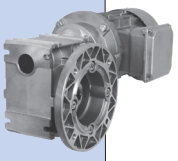

SK 1SI__F
Flange Side A

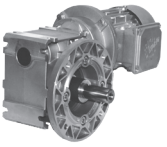

SK 1SI__VF
Flange & Shaft Side A

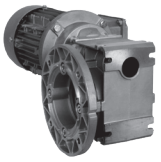

SK 1SI__F
Flange Side B

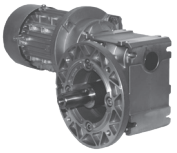

SK 1SI__VF
Flange & Shaft Side B

SK 1SI__FF
Double Flange

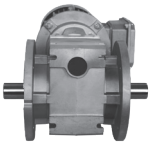

SK 1SI__LFF
Double Shaft,
Double Flange

Torque Arm

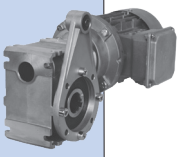

SK 1SI__D
Torque Arm Side A
at 90°

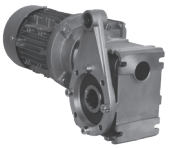

SK 1SI__D
Torque Arm Side B
at 90°

Shaft Cover

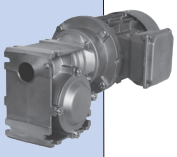

SK 1SI__H
Cover Side A

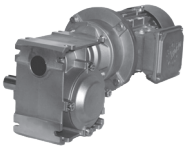

SK 1SI__VH
Cover Side A,
Shaft Side B

SK 1SI__H
Cover Side B

SK 1SI__VH
Cover Side B,
Shaft Side A

Send Quote Requests to info@automatedpt.com
Call +1(800)985-6929 To Order or Order Online At Nordgearmotors.com

Send Quote Requests to info@automatedpt.com
Call +1(800)985-6929 To Order or Order Online At Nordgearmotors.com

FLEXBLOC™ Helical Worm

10:1 Helical Input Stage

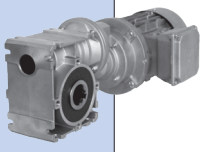

SK 1SI__/H10
H10 Position T1

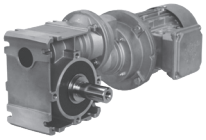

SK 1SI__/H10V
H10 Position T1,
Shaft Side A

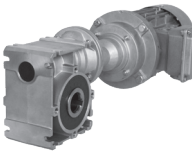

SK 1SI__/H10
H10 Position T2

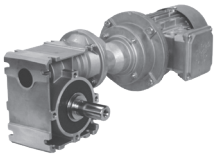

SK 1SI__/H10V
H10 Position T2,
Shaft Side A

10:1 Helical Input Stage

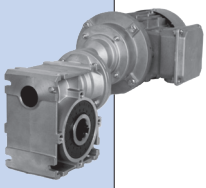

SK 1SI__/H10
H10 Position T3

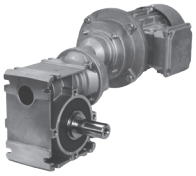

SK 1SI__/H10V
H10 Position T3,
Shaft Side A

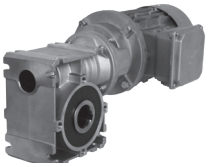

SK 1SI__/H10
H10 Position T4

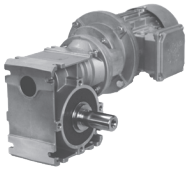

SK 1SI__/H10 V
H10 Position T4,
Shaft Side A

Send Quote Requests to info@automatedpt.com
Call +1(800)985-6929 To Order or Order Online At Nordgearmotors.com

Send Quote Requests to info@automatedpt.com
Call +1(800)985-6929 To Order or Order Online At Nordgearmotors.com

FLEXBLOC™ Configuration

NORD DRIVESYSTEMS

FLEXBLOC™ Double Worm

Double Worm

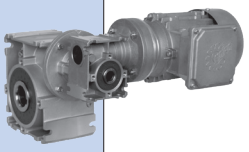

SK 1SI __/31
Double Worm - Position U1

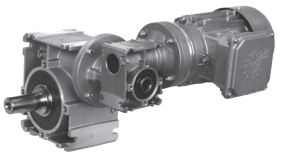

SK 1SI __/31V
Double Worm - Position U1, Shaft Side A

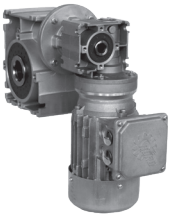

SK 1SI __/31
Double Worm - Position U2

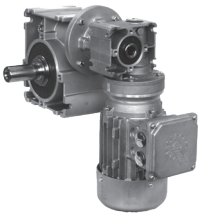

SK 1SI __/31V
Double Worm - Position U2, Shaft Side B

Double Worm

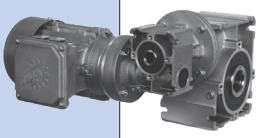

SK 1SI __/31
Double Worm - Position U3

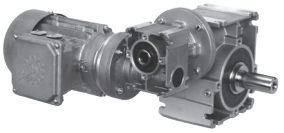

SK 1SI __/31V
Double Worm - Position U3, Shaft Side B

SK 1SI __/31
Double Worm - Position U4

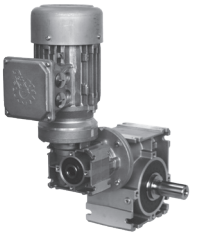

SK 1SI __/31V
Double Worm - Position U4, Shaft Side B

Double Worm

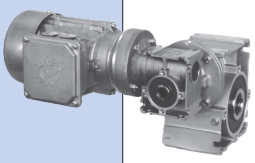

SK 1SI __/31
Double Worm - Position U5

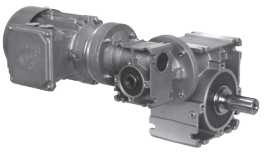

SK 1SI __/31V
Double Worm - Position U5, Shaft Side B

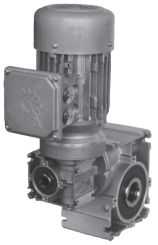

SK 1SI __/31
Double Worm - Position U6

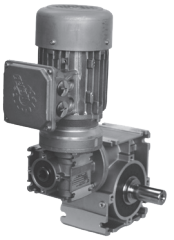

SK 1SI __/31V
Double Worm - Position U6, Shaft Side B

Double Worm

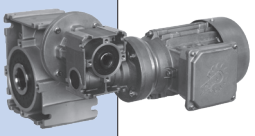

SK 1SI __/31
Double Worm - Position U7

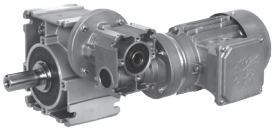

SK 1SI __/31V
Double Worm - Position U7, Shaft Side A

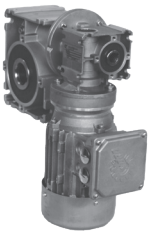

SK 1SI __/31
Double Worm - Position U8

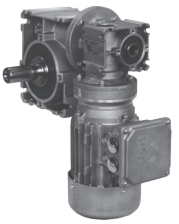

SK 1SI __/31V
Double Worm - Position U8, Shaft Side A

Send Quote Requests to info@automatedpt.com
Call +1(800)985-6929 To Order or Order Online At Nordgearmotors.com

MINICASE® Configuration

MINICASE® Worm Configuration

Basic Design

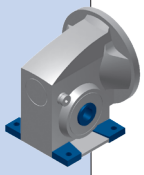

SK 1SMI__AX
Basic Design

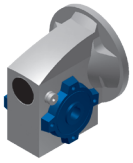

SK 1SMI__AZ
Basic Design

Solid Shaft

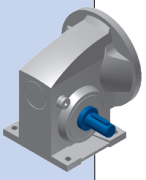

SK 1SMI__V
Shaft Side A

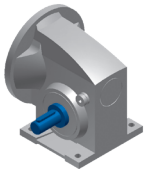

SK 1SMI__V
Shaft Side B

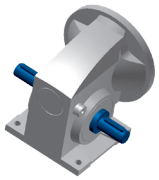

SK 1SMI__L
Double Shaft

Flange

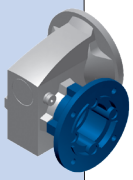

SK 1SMI__F
Flange Side A

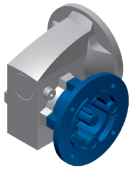

SK 1SMI__VF
Flange & Shaft
Side A

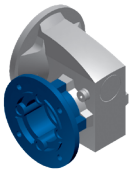

SK 1SMI__F
Flange Side B

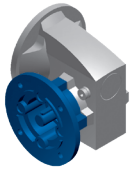

SK 1SMI__VF
Flange & Shaft
Side B

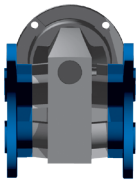

SK 1SMI__FF
Double Flange

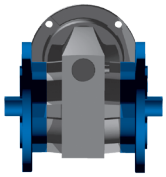

SK 1SMI__LFF
Double Shaft,
Double Flange

Torque Arm

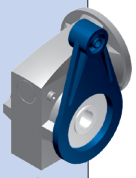

SK 1SMI__D
Torque Arm Side A
at 90°

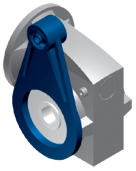

SK 1SMI__D
Torque Arm Side B
at 90°

Shaft Cover

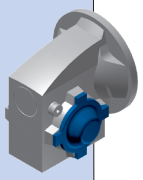

SK 1SMI__H
Cover Side A

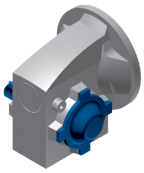

SK 1SMI__VH
Cover Side A,
Shaft Side B

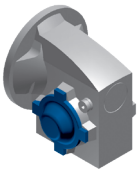

SK 1SMI__H
Cover Side B

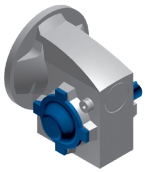

SK 1SMI__VH
Cover Side B,
Shaft Side A

Send Quote Requests to info@automatedpt.com
Call +1(800)985-6929 To Order or Order Online At Nordgearmotors.com

Send Quote Requests to info@automatedpt.com
Call +1(800)985-6929 To Order or Order Online At Nordgearmotors.com

MINICASE® Configuration

MINICASE® Helical Worm

10:1 Helical Input Stage

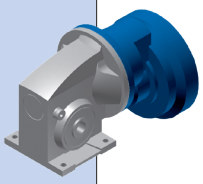

SK 1SMI__/H10
H10 Position T1

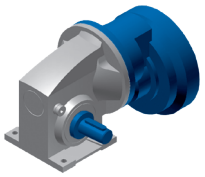

SK 1SMI__/H10V
H10 Position T1,
Shaft Side A

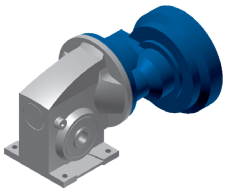

SK 1SMI__/H10
H10 Position T2

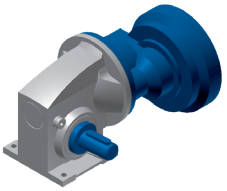

SK 1SMI__/H10V
H10 Position T2,
Shaft Side A

10:1 Helical Input Stage

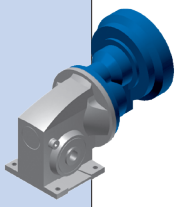

SK 1SMI__/H10
H10 Position T3

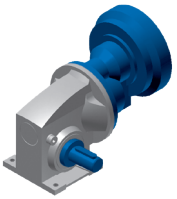

SK 1SMI__/H10V
H10 Position T3,
Shaft Side A

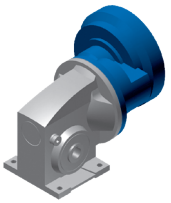

SK 1SMI__/H10
H10 Position T4

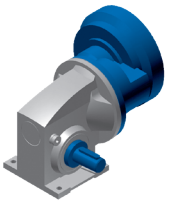

SK 1SMI__/H10 V
H10 Position T4,
Shaft Side A

Send Quote Requests to info@automatedpt.com
Call +1(800)985-6929 To Order or Order Online At Nordgearmotors.com

MINICASE® Configuration

MINICASE® Double Worm

Double Worm

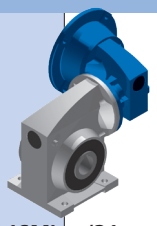

SK 1SMI __/31
Double Worm - Position U1

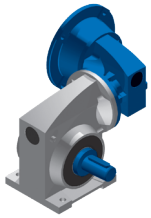

SK 1SMI __/31V
Double Worm - Position U1, Shaft Side A

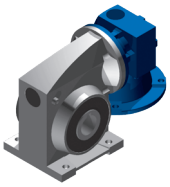

SK 1SMI __/31
Double Worm - Position U2

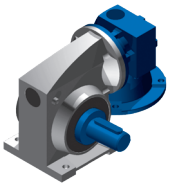

SK 1SMI __/31V
Double Worm - Position U2, Shaft Side A

Double Worm

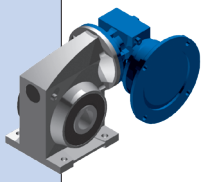

SK 1SMI __/31
Double Worm - Position U3

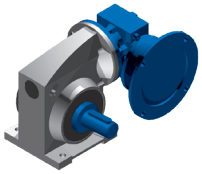

SK 1SMI __/31V
Double Worm - Position U3, Shaft Side A

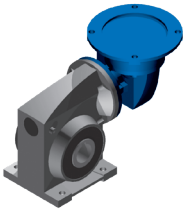

SK 1SMI __/31
Double Worm - Position U4

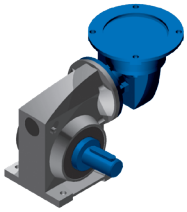

SK 1SMI __/31V
Double Worm - Position U4, Shaft Side A

Double Worm

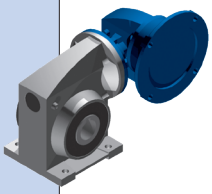

SK 1SMI __/31
Double Worm - Position U5

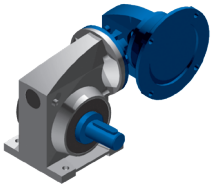

SK 1SMI __/31V
Double Worm - Position U5, Shaft Side A

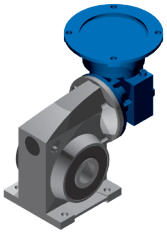

SK 1SMI __/31
Double Worm - Position U6

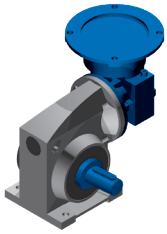

SK 1SMI __/31V
Double Worm - Position U6, Shaft Side A

Double Worm

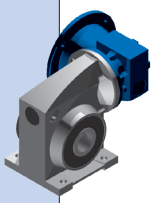

SK 1SMI __/31
Double Worm - Position U7

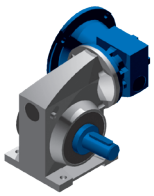

SK 1SMI __/31V
Double Worm - Position U7, Shaft Side A

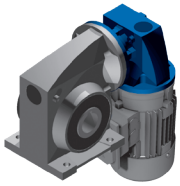

SK 1SMI __/31
Double Worm - Position U8

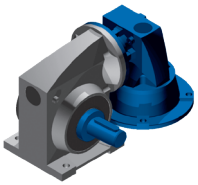

SK 1SMI __/31V
Double Worm - Position U8, Shaft Side A

Send Quote Requests to info@automatedpt.com
Call +1(800)985-6929 To Order or Order Online At Nordgearmotors.com

NOTES

Notes

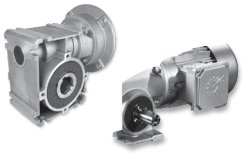

DRIVESYSTEMS

Send Quote Requests to info@automatedpt.com
Call +1(800)985-6929 To Order or Order Online At Nordgearmotors.com

FLEXBLOC™ Ratings

Selection

- Order Form
- Unit Examples
- Motorized C-Face Reducers
- Ratings
- Reducer Selection

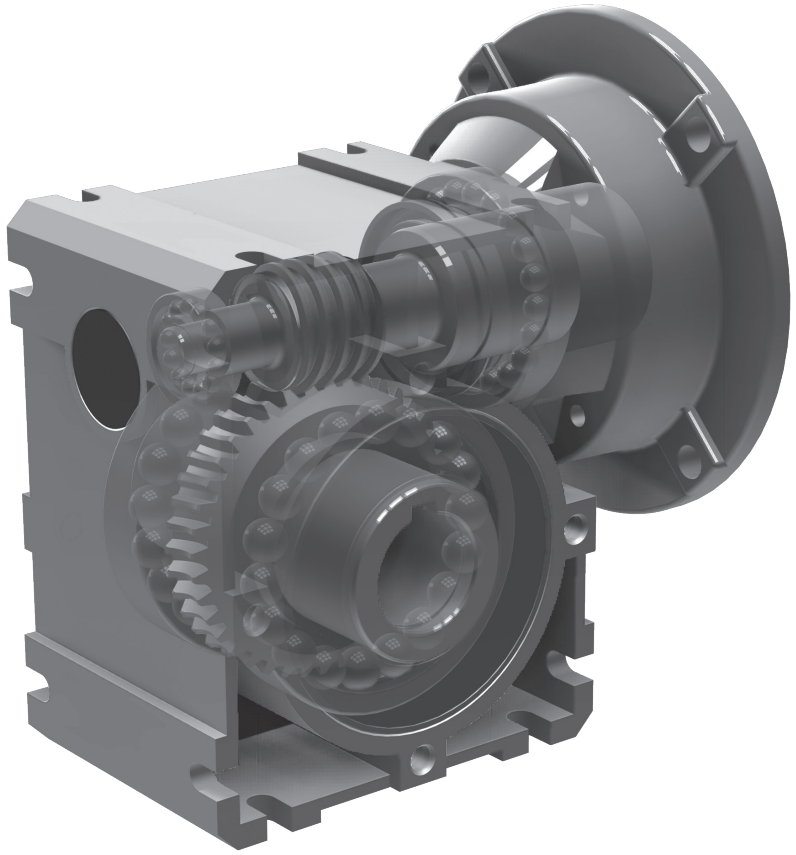

NORD® DRIVESYSTEMS

www.nord.com

UNICASE™

FLEXBLOC™ Ordering Guide

	Gear Unit	Flexbloc Size	
SK	1SI		

Flexbloc Design	Flexbloc Size	
	❍ 31	❒ V -
	❍ 40	❍ VA
	❍ 50	❒ L -
	❍ 63	❒ F -
	❍ 75	❍ FA

SK 1SI50 - N56C - 71S/4
Flexbloc Worm Unit
Hollow Shaft,
One Stage

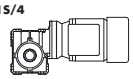

SK 1SI50F - N56C - 71S/4
Flexbloc Worm Unit
Hollow Shaft,
Flange Side A
One Stage

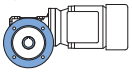

SK 1SI50D - N56C - 71S/4
Flexbloc Worm Unit
Hollow Shaft,
Torque Arm Side A
+180° One Stage

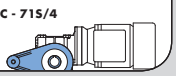

Motor Power P_n [hp]	Output Speed n_2 [rpm]	Output Torque T_a [lb-in]	Service Factor f_B	AGMA Class	Gear Ratio i_{tot}	F_a O [lb
1.0	18	2786	3.3	III	94.19	30
	13	3320	3.3	III	129.00	33
	10	4069	2.9	III	165.50	36
	9.0	4441	2.7	III	183.50	36
	6.8	5567	2.3	III	241.50	36
	3.2	10580	1.2	I	510.00	32
	2.6	12885	1.0	I	645.00	28
	6.4	7027	1.9	II	257.63	36
	5.5	6669	2.0	III	299.28	36
	4.5	7854	1.7	II	365.07	36
	3.5	9716	1.4	II	468.37	34
	3.2	10574	1.3	I	519.31	32
	2.5	13197	1.1	I	660.60	27
	6.1	7565	3.3	III	269.76	

FLEXBLOC™ Ordering Guide

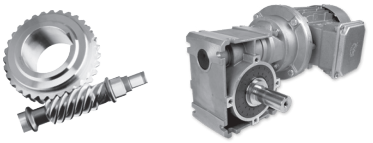

NORD DRIVESYSTEMS

RATINGS

	Gear Unit	FLEXBLOC™ Size	Reducer Options		Input Option	Motor	Motor Options
SK				-			

see pages 222 - 233

FLEXBLOC™ Design
1SI

FLEXBLOC™ Size
❍ 31
❍ 40
❍ 40/31
❍ 50
❍ 50/31
❍ 63
❍ 63/31
❍ 75
❍ 75/40

Shafts
❍ Inch
❍ Metric

Reducer Options
❒ **V -** Plug in Solid Output Shaft 📖 30
❍ VA ❍ VB ❍ Unassembled
❒ **L -** Double Solid Shaft Extension 📖 31
❒ **F -** B5 Output Flange 📖 31
❍ FA ❍ FB ❍ FF ❍ Unassembled
❒ **D -** Torque Arm 📖 31
❍ DA ❍ DB ❍ Unassembled
❒ **H -** Shaft Cover 📖 30
❍ HA ❍ HB ❍ Unassembled
❒ **B -** Fixing Kit
❒ **X -** Foot Plate 📖 31
❒ **J -** Shaft Bushing ____ size 📖 31
❒ **H10 -** Helical Input Stage (10:1) 📖 33

Input Shaft	NEMA Adapter	IEC
W	**N48C** **N56C** **N140TC** **N180TC**	**IEC 63** **IEC 71** **IEC 80** **IEC 90** **IEC 100** **IEC 112**

Motors	Premium Efficient Motors
63S/4 - 0.16hp **63L/4** - 0.25hp **71S/4** - 0.33hp **71L/4** - 0.50hp **80S/4** - 0.75hp	**80LP/4** - 1hp **90SP/4** - 1.5hp **90LP/4** - 2hp **100LP/4** - 3hp **112MP/4** - 5hp

Other Pole & Speed Options available

Product Specifications

Single Worm Ratio	Helical Worm (1SI_/H10) Ratio	Helical Worm (1SI_/H10) Position	Double Worm (1SI_/_) Ratio	Double Worm (1SI_/_) Position
❍ 5	❍ 50	❍ T1	❍ 150	❍ U1
❍ 7.5	❍ 75	❍ T2	❍ 225	❍ U2
❍ 10	❍ 100	❍ T3	❍ 300	❍ U3
❍ 12.5	❍ 125	❍ T4	❍ 375	❍ U4
❍ 15	❍ 150		❍ 450	❍ U5
❍ 20	❍ 200		❍ 600	❍ U6
❍ 25	❍ 250		❍ 750	❍ U7
❍ 30	❍ 300		❍ 900	❍ U8
❍ 40	❍ 400		❍ 1200	
❍ 50	❍ 500		❍ 1500	
❍ 60	❍ 600		❍ 1800	
❍ 80	❍ 800		❍ 2400	
❍ 100	❍ 1000		❍ 3000	

Paint
❍ No Paint (Standard)
❍ Stainless Steel Paint
❍ NSD+ (gray)
❍ NSD+W (white)
❍ NSD-X3 (gray)
❍ NSD-X3W (white)
❍ NSD[tuph]
❍ Special _____

Torque Arm Orientation (If Selected)

❍ 90°
❍ 135°
❍ 180°
❍ 225°
❍ 270°
❍ 315°
❍ Other

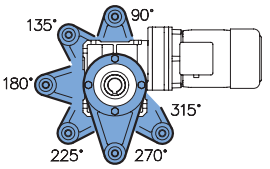

Torque Arm Orientation (If Selected)

❍ Side A
❍ Side B

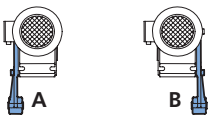

Gearmotor Only Details

Voltage & Frequency
❍ 208V-60Hz
❍ 230/460V-60Hz
❍ 575V-60Hz
❍ 400V-50Hz
❍ Other _____

Terminal Box Position

❍ KK1
❍ KK2
❍ KK3
❍ KK4

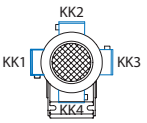

Conduit Entry Location

❍ I *
❍ II
❍ III *
❍ IV

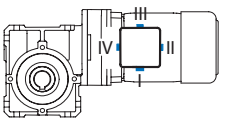

* Brakemotor options

Send Quote Requests to info@automatedpt.com
Call +1(800)985-6929 To Order or Order Online At Nordgearmotors.com

Send Quote Requests to info@automatedpt.com
Call +1(800)985-6929 To Order or Order Online At Nordgearmotors.com

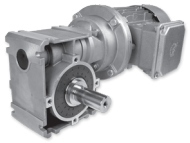

FLEXBLOC™ Examples

Examples of Available FLEXBLOC™ Units with Hollow Shaft Design

SK 1SI50 - N56C - 71S/4
Flexbloc Worm Unit
Hollow Shaft,
One Stage

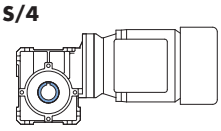

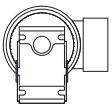

SK 1SI50F - N56C - 71S/4
Flexbloc Worm Unit
Hollow Shaft,
Flange Side A
One Stage

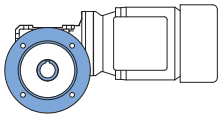

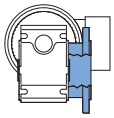

SK 1SI50D - N56C - 71S/4
Flexbloc Worm Unit
Hollow Shaft,
Torque Arm Side A
at 180°, One Stage

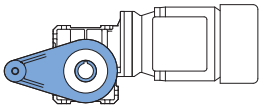

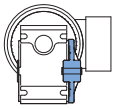

SK 1SI50/H10F - N56C - 71S/4
Flexbloc Worm Unit
Hollow Shaft,
Flange Side A,
Helical Input Stage T1,
Two Stages

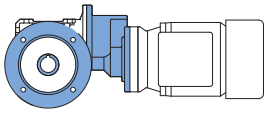

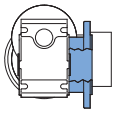

SK 1SI50/31 - N56C - 71S/4
Flexbloc Worm Unit
Hollow Shaft,
Double Worm U1,
Two Stages

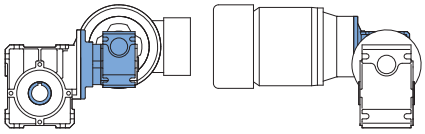

SK 1SI50H - N56C - 71S/4
Flexbloc Worm Unit
Hollow Shaft,
Shaft Cover Side A,
One Stage

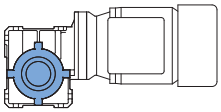

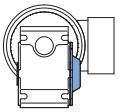

Examples of Available FLEXBLOC™ Units with Solid Shaft Design

SK 1SI50V - N56C - 71S/4
Flexbloc Worm Unit
Solid Shaft Side A,
One Stage

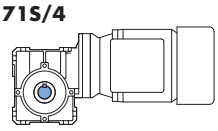

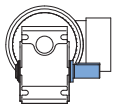

SK 1SI50VF - N56C - 71S/4
Flexbloc Worm Unit
Solid Shaft Side A,
Flange Side A
One Stage

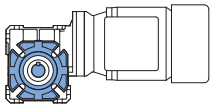

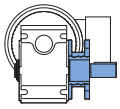

SK 1SI50L - N56C - 71S/4
Flexbloc Worm Unit
Double Solid Shaft,
One Stage

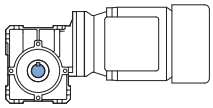

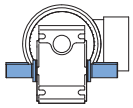

SK 1SI50/H10V - N56C - 71S/4
Flexbloc Worm Unit
Solid Shaft Side B,
Helical Input Stage T1,
Two Stages

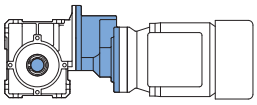

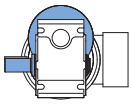

SK 1SI50/31VF - N56C - 71S/4
Flexbloc Worm Unit
Solid Shaft Side A,
Flange Side B,
Double Worm U1,
Two Stages

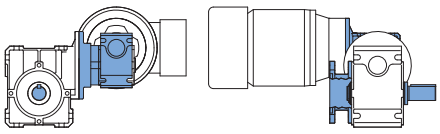

SK 1SI50VH - N56C - 71S/4
Flexbloc Worm Unit
Solid Shaft Side B,
Shaft Cover Side A,
One Stage

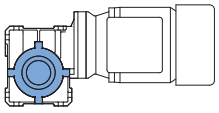

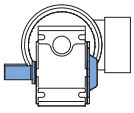

Send Quote Requests to info@automatedpt.com
Call +1(800)985-6929 To Order or Order Online At Nordgearmotors.com

0.16 hp - FLEXBLOC™ Motorized C-Face Reducers

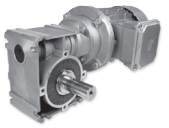

NORD DRIVESYSTEMS

RATINGS

Motor Power P_1 [hp]	Output Speed n_2 [rpm]	Output Torque T_2 [lb-in]	Service Factor f_B	Total Ratio i_{tot}	Worm Ratio i_{worm}	2nd Ratio i_{2nd}	OHL F_R [lb]	OHL Flange Unit F_{RF} [lb]	Model Type	Approx. Weight [lb]	Config. Page	Dim. Page
0.16	340	26	7.8	5	5		259	180	**SK 1SI31 - 56C - 63S/4**	11	79	94
	227	37	6.4	7.5	7.5		295	205				
	170	48	4.8	10	10		322	225				
	136	60	3.6	12.5	12.5		344	234				
	113	64	4.0	15	15		367	234				
	85	81	2.9	20	20		401	234				
	68	97	2.3	25	25		405	234				
	57	100	2.6	30	30		405	234				
	43	122	2.0	40	40		405	234				
	34	140	1.6	50	50		405	234				
	28	154	1.4	60	60		405	232				
	21	177	1.1	80	80		405	232				
	17	196	0.9	100	100		405	232				
	340	27	12.7	5	5		608	416	**SK 1SI40 - 56C - 63S/4**	13	81	98
	227	38	10.2	7.5	7.5		693	416				
	170	50	7.5	10	10		720	414				
	136	60	6.1	12.5	12.5		720	414				
	113	68	6.4	15	15		720	414				
	85	86	4.6	20	20		720	414				
	68	103	3.6	25	25		720	414				
	57	109	4.1	30	30		720	414				
	43	134	3.0	40	40		720	414				
	34	155	2.5	50	50		720	414				
	28	172	2.1	60	60		720	414				
	21	200	1.6	80	80		720	414				
	17	221	1.4	100	100		720	412				
	340	27	21.5	5	5		1080	835	**SK 1SI50 - 56C - 63S/4**	17	83	102
	227	39	17.5	7.5	7.5		1080	844				
	170	51	12.9	10	10		1080	844				
	136	60	10.7	12.5	12.5		1080	844				
	113	72	10.8	15	15		1080	844				
	85	92	7.8	20	20		1080	844				
	68	110	6.1	25	25		1080	844				
	57	118	6.7	30	30		1080	844				
	43	148	5.0	40	40		1080	842				
	34	173	3.9	50	50		1080	842				
	28	193	3.3	60	60		1080	842				
	21	229	2.6	80	80		1080	842				
	17	257	2.1	100	100		1080	842				

(AGMA Class I = f_B 1.0 - 1.39 II = f_B 1.4 - 1.99 III = f_B ≥ 2.0)

Send Quote Requests to info@automatedpt.com
Call +1(800)985-6929 To Order or Order Online At Nordgearmotors.com

NORD DRIVESYSTEMS

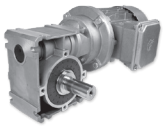

0.16 hp - FLEXBLOC™ Motorized C-Face Reducers

RATINGS

Motor Power P_1 [hp]	Output Speed n_2 [rpm]	Output Torque T_2 [lb-in]	Service Factor f_B	Total Ratio i_{tot}	Worm Ratio i_{worm}	2nd Ratio i_{2nd}	OHL F_R [lb]	OHL Flange Unit F_{RF} [lb]	Model Type	Approx. Weight [lb]	Config. Page	Dim. Page
0.16	340	27	29.7	5	5		1418	779	**SK 1SI63 - 56C - 63S/4**	25	85	106
	227	40	29.7	7.5	7.5		1418	779				
	170	53	22.6	10	10		1418	779				
	136	60	19.1	12.5	12.5		1418	779				
	113	74	18.5	15	15		1418	779				
	85	95	13.4	20	20		1418	779				
	68	115	10.4	25	25		1418	779				
	57	125	11.3	30	30		1418	779				
	43	158	8.3	40	40		1418	779				
	34	185	6.6	50	50		1418	779				
	28	211	5.4	60	60		1418	779				
	21	253	4.1	80	80		1418	779				
	17	292	3.3	100	100		1418	779				
	34	242	2.3	50	5	10	720	412	**SK 1SI40/H10 - 56C - 63S/4**	15	81	114
	23	340	1.9	75	7.5	10	720	410				
	17	436	1.4	100	10	10	720	405				
	14	544	1.1	125	12.5	10	720	401				
	11	573	1.2	150	15	10	720	398				
	8.5	704	0.9	200	20	10	720	389				
	6.8	763	0.8	250	25	10	720	385				
	5.7	823	0.9	300	30	10	720	380				
	4.3	830	0.8	400	40	10	720	378				
	3.4	774	0.8	500	50	10	720	383				
	2.8	730	0.8	600	60	10	720	387				
	2.1	664	0.8	800	80	10	720	392				
	1.7	608	0.8	1000	100	10	720	396				
	34	248	3.7	50	5	10	1080	842	**SK 1SI50/H10 - 56C - 63S/4**	18	83	114
	23	349	3.2	75	7.5	10	1080	842				
	17	447	2.4	100	10	10	1080	839				
	14	544	1.9	125	12.5	10	1080	837				
	11	591	2.1	150	15	10	1080	837				
	8.5	728	1.6	200	20	10	1080	833				
	6.8	865	1.3	250	25	10	1080	830				
	5.7	877	1.5	300	30	10	1080	830				
	4.3	1050	1.1	400	40	10	1080	824				
	3.4	1193	0.9	500	50	10	1080	817				
	2.8	1305	0.8	600	60	10	1080	812				
	2.1	1195	0.8	800	80	10	1080	817				
	1.7	1117	0.8	1000	100	10	1080	821				

(AGMA Class I = f_B 1.0 - 1.39 II = f_B 1.4 - 1.99 III = f_B ≥ 2.0)

Send Quote Requests to info@automatedpt.com
Call +1(800)985-6929 To Order or Order Online At Nordgearmotors.com

0.16 hp - FLEXBLOC™ Motorized C-Face Reducers

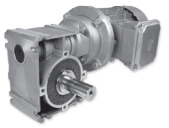

NORD DRIVESYSTEMS

RATINGS

Motor Power P_1 [hp]	Output Speed n_2 [rpm]	Output Torque T_2 [lb-in]	Service Factor f_B	Total Ratio i_{tot}	Worm Ratio i_{worm}	2nd Ratio i_{2nd}	OHL F_R [lb]	OHL Flange Unit F_{RF} [lb]	Model Type	Approx. Weight [lb]	Config. Page	Dim. Page
0.16	34	251	3.7	50	5	10	1418	779	**SK 1SI63/H10 - 56C - 63S/4**	26	85	114
	23	353	3.6	75	7.5	10	1418	779				
	17	453	3.7	100	10	10	1418	776				
	14	544	3.4	125	12.5	10	1418	774				
	11	609	3.7	150	15	10	1418	774				
	8.5	752	2.8	200	20	10	1418	770				
	6.8	880	2.2	250	25	10	1418	767				
	5.7	913	2.5	300	30	10	1418	765				
	4.3	1098	1.9	400	40	10	1418	761				
	3.4	1223	1.6	500	50	10	1418	754				
	2.8	1360	1.4	600	60	10	1418	749				
	2.1	1527	1.1	800	80	10	1418	740				
	1.7	1670	0.9	1000	100	10	1418	734				
	11	376	1.7	150	30	5	720	407	**SK 1SI40/31 - 56C - 63S/4**	16	81	116
	7.6	524	1.3	225	30	7.5	720	401				
	5.7	662	1.1	300	30	10	720	392				
	4.5	716	1.0	375	30	12.5	720	389				
	3.8	859	0.9	450	30	15	720	376				
	2.8	962	0.8	600	30	20	720	365				
	2.3	974	0.8	750	30	25	720	365				
	1.9	996	0.8	900	30	30	720	362				
	1.4	1029	0.8	1200	30	40	720	358				
	1.1	1051	0.8	1500	30	50	720	356				
	0.9	1062	0.8	1800	30	60	720	353				
	0.7	1084	0.8	2400	30	80	720	351				
	0.6	1095	0.8	3000	30	100	720	349				
	11	412	2.9	150	30	5	1080	839	**SK 1SI50/31 - 56C - 63S/4**	20	83	116
	7.6	550	2.3	225	30	7.5	1080	837				
	5.7	698	1.9	300	30	10	1080	835				
	4.5	716	1.8	375	30	12.5	1080	835				
	3.8	913	1.5	450	30	15	1080	828				
	2.8	1110	1.2	600	30	20	1080	821				
	2.3	1298	1.1	750	30	25	1080	812				
	1.9	1342	1.1	900	30	30	1080	810				
	1.4	1647	0.9	1200	30	40	1080	794				
	1.1	1892	0.8	1500	30	50	1080	779				
	0.9	1914	0.8	1800	30	60	1080	776				
	0.7	1947	0.8	2400	30	80	1080	774				
	0.6	1969	0.8	3000	30	100	1080	772				

(AGMA Class I = f_B 1.0 - 1.39 II = f_B 1.4 - 1.99 III = f_B ≥ 2.0)

Send Quote Requests to info@automatedpt.com
Call +1(800)985-6929 To Order or Order Online At Nordgearmotors.com

NORD DRIVESYSTEMS

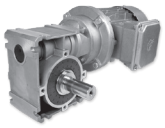

0.16 hp - FLEXBLOC™ Motorized C-Face Reducers

Motor Power P_1 [hp]	Output Speed n_2 [rpm]	Output Torque T_2 [lb-in]	Service Factor f_B	Total Ratio i_{tot}	Worm Ratio i_{worm}	2nd Ratio i_{2nd}	OHL F_R [lb]	OHL Flange Unit F_{RF} [lb]	Model Type	Approx. Weight [lb]	Config. Page	Dim. Page
0.16	11	430	4.9	150	30	5	1418	776	**SK 1SI63/31 - 56C - 63S/4**	28	85	116
	7.6	577	3.8	225	30	7.5	1418	774				
	5.7	734	3.1	300	30	10	1418	772				
	4.5	716	3.3	375	30	12.5	1418	772				
	3.8	940	2.5	450	30	15	1418	765				
	2.8	1145	2.1	600	30	20	1418	758				
	2.3	1342	1.9	750	30	25	1418	749				
	1.9	1396	1.8	900	30	30	1418	747				
	1.4	1647	1.6	1200	30	40	1418	734				
	1.1	1790	1.5	1500	30	50	1418	727				
	0.9	2040	1.3	1800	30	60	1418	709				
	0.7	2291	1.2	2400	30	80	1411	689				
	0.6	2506	1.1	3000	30	100	1373	671				
	11	430	6.6	150	30	5	1800	1800	**SK 1SI75/40 - 56C - 63S/4**	40	87	116
	7.6	591	5.1	225	30	7.5	1800	1800				
	5.7	752	4.1	300	30	10	1800	1800				
	4.5	716	4.4	375	30	12.5	1800	1800				
	3.8	966	3.3	450	30	15	1800	1800				
	2.8	1181	2.8	600	30	20	1800	1800				
	2.3	1387	2.4	750	30	25	1800	1800				
	1.9	1450	2.4	900	30	30	1800	1800				
	1.4	1718	2.1	1200	30	40	1800	1800				
	1.1	1969	1.8	1500	30	50	1800	1800				
	0.9	2148	1.7	1800	30	60	1800	1800				
	0.7	2434	1.5	2400	30	80	1800	1800				
	0.6	2327	1.6	3000	30	100	1800	1800				

(AGMA Class I = f_B 1.0 - 1.39 II = f_B 1.4 - 1.99 III = f_B ≥ 2.0)

Send Quote Requests to info@automatedpt.com
Call +1(800)985-6929 To Order or Order Online At Nordgearmotors.com

0.25 hp - FLEXBLOC™ Motorized C-Face Reducers

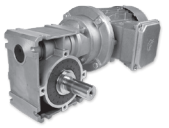

NORD DRIVESYSTEMS

RATINGS

Motor Power P_1 [hp]	Output Speed n_2 [rpm]	Output Torque T_2 [lb-in]	Service Factor f_B	Total Ratio i_{tot}	Worm Ratio i_{worm}	2nd Ratio i_{2nd}	OHL F_R [lb]	OHL Flange Unit F_{RF} [lb]	Model Type	Approx. Weight [lb]	Config. Page	Dim. Page
0.25	336	42	4.9	5	5		254	178	SK 1SI31 - 56C - 63L/4	12	79	94
	224	60	4.0	7.5	7.5		290	203				
	168	76	3.0	10	10		317	221				
	134	96	2.2	12.5	12.5		335	234				
	112	103	2.5	15	15		358	234				
	84	130	1.8	20	20		389	234				
	67	155	1.4	25	25		405	232				
	56	161	1.7	30	30		405	232				
	42	195	1.3	40	40		405	232				
	34	225	1.0	50	50		405	230				
	28	242	0.9	60	60		405	227				
	336	43	7.9	5	5		603	414	SK 1SI40 - 56C - 63L/4	15	81	98
	224	61	6.4	7.5	7.5		691	414				
	168	79	4.7	10	10		720	414				
	134	96	3.8	12.5	12.5		720	414				
	112	109	4.0	15	15		720	414				
	84	138	2.9	20	20		720	414				
	67	165	2.3	25	25		720	414				
	56	175	2.5	30	30		720	414				
	42	214	1.9	40	40		720	412				
	34	249	1.5	50	50		720	412				
	28	275	1.3	60	60		720	412				
	21	321	1.0	80	80		720	410				
	17	354	0.9	100	100		720	410				
	336	43	13.4	5	5		1080	835	SK 1SI50 - 56C - 63L/4	18	83	102
	224	63	10.9	7.5	7.5		1080	844				
	168	82	8.1	10	10		1080	844				
	134	96	6.7	12.5	12.5		1080	844				
	112	115	6.7	15	15		1080	844				
	84	147	4.9	20	20		1080	842				
	67	177	3.8	25	25		1080	842				
	56	189	4.2	30	30		1080	842				
	42	237	3.1	40	40		1080	842				
	34	277	2.5	50	50		1080	842				
	28	310	2.1	60	60		1080	842				
	21	367	1.6	80	80		1080	842				
	17	411	1.3	100	100		1080	839				

(AGMA Class I = f_B 1.0 - 1.39 II = f_B 1.4 - 1.99 III = f_B ≥ 2.0)

Send Quote Requests to info@automatedpt.com
Call +1(800)985-6929 To Order or Order Online At Nordgearmotors.com

NORD DRIVESYSTEMS

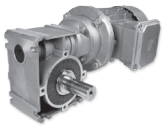

0.25 hp - FLEXBLOC™ Motorized C-Face Reducers

Motor Power P_1 [hp]	Output Speed n_2 [rpm]	Output Torque T_2 [lb-in]	Service Factor f_B	Total Ratio i_{tot}	Worm Ratio i_{worm}	2nd Ratio i_{2nd}	OHL F_R [lb]	OHL Flange Unit F_{RF} [lb]	Model Type	Approx. Weight [lb]	Config. Page	Dim. Page
0.25	336	44	18.5	5	5		1418	779	SK 1SI63 - 56C - 63L/4	26	85	106
	224	65	18.5	7.5	7.5		1418	779				
	168	84	14.1	10	10		1418	779				
	134	96	11.9	12.5	12.5		1418	779				
	112	119	11.5	15	15		1418	779				
	84	153	8.3	20	20		1418	779				
	67	184	6.5	25	25		1418	779				
	56	201	7.1	30	30		1418	779				
	42	252	5.2	40	40		1418	779				
	34	296	4.1	50	50		1418	779				
	28	338	3.4	60	60		1418	779				
	21	405	2.6	80	80		1418	776				
	17	468	2.1	100	100		1418	776				
	34	387	1.4	50	5	10	720	407	SK 1SI40/H10 - 56C - 63L/4	16	81	114
	22	545	1.2	75	7.5	10	720	401				
	17	698	0.9	100	10	10	720	389				
	11	918	0.8	150	15	10	720	369				
	34	397	2.3	50	5	10	1080	839	SK 1SI50/H10 - 56C - 63L/4	20	83	114
	22	559	2.0	75	7.5	10	1080	837				
	17	717	1.5	100	10	10	1080	835				
	13	872	1.2	125	12.5	10	1080	830				
	11	946	1.3	150	15	10	1080	828				
	8.4	1166	1.0	200	20	10	1080	819				
	6.7	1386	0.8	250	25	10	1080	808				
	5.6	1405	0.9	300	30	10	1080	808				
	34	401	2.3	50	5	10	1418	776	SK 1SI63/H10 - 56C - 63L/4	27	85	114
	22	566	2.3	75	7.5	10	1418	774				
	17	726	2.3	100	10	10	1418	772				
	13	872	2.1	125	12.5	10	1418	767				
	11	975	2.3	150	15	10	1418	765				
	8.4	1204	1.7	200	20	10	1418	756				
	6.7	1410	1.4	250	25	10	1418	747				
	5.6	1462	1.6	300	30	10	1418	745				
	4.2	1759	1.2	400	40	10	1418	727				
	3.4	1959	1.0	500	50	10	1418	716				
	2.8	2179	0.9	600	60	10	1418	698				

(AGMA Class I = f_B 1.0 - 1.39 II = f_B 1.4 - 1.99 III = f_B ≥ 2.0)

Send Quote Requests to info@automatedpt.com
Call +1(800)985-6929 To Order or Order Online At Nordgearmotors.com

0.25 hp - FLEXBLOC™ Motorized C-Face Reducers

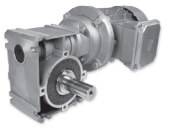

NORD DRIVESYSTEMS

RATINGS

Motor Power P_1 [hp]	Output Speed n_2 [rpm]	Output Torque T_2 [lb-in]	Service Factor f_B	Total Ratio i_{tot}	Worm Ratio i_{worm}	2nd Ratio i_{2nd}	OHL F_R [lb]	OHL Flange Unit F_{RF} [lb]	Model Type	Approx. Weight [lb]	Config. Page	Dim. Page
0.25	11	602	1.1	150	30	5	720	396	SK 1SI40/31 - 56C - 63L/4	17	81	116
	7.5	839	0.8	225	30	7.5	720	378				
	11	660	1.8	150	30	5	1080	835	SK 1SI50/31 - 56C - 63L/4	21	83	116
	7.5	882	1.4	225	30	7.5	1080	830				
	5.6	1118	1.2	300	30	10	1080	821				
	4.5	1147	1.1	375	30	12.5	1080	819				
	3.7	1462	0.9	450	30	15	1080	806				
	2.8	1778	0.8	600	30	20	1080	785				
	11	688	3.0	150	30	5	1418	772	SK 1SI63/31 - 56C - 63L/4	29	85	116
	7.5	925	2.4	225	30	7.5	1418	765				
	5.6	1176	2.0	300	30	10	1418	756				
	4.5	1147	2.0	375	30	12.5	1418	758				
	3.7	1505	1.6	450	30	15	1418	743				
	2.8	1835	1.3	600	30	20	1418	722				
	2.2	2151	1.2	750	30	25	1418	700				
	1.9	2237	1.1	900	30	30	1418	693				
	1.4	2638	1.0	1200	30	40	1346	657				
	1.1	2868	0.9	1500	30	50	1296	632				
	0.9	3269	0.8	1800	30	60	1190	581				
	0.7	3670	0.8	2400	30	80	1060	518				
	11	688	4.1	150	30	5	1800	1800	SK 1SI75/40 - 56C - 63L/4	41	87	116
	7.5	946	3.2	225	30	7.5	1800	1800				
	5.6	1204	2.6	300	30	10	1800	1800				
	4.5	1147	2.8	375	30	12.5	1800	1800				
	3.7	1548	2.1	450	30	15	1800	1800				
	2.8	1893	1.8	600	30	20	1800	1800				
	2.2	2222	1.5	750	30	25	1800	1800				
	1.9	2323	1.5	900	30	30	1800	1800				
	1.4	2753	1.3	1200	30	40	1800	1800				
	1.1	3154	1.2	1500	30	50	1800	1800				
	0.9	3441	1.1	1800	30	60	1800	1800				
	0.7	3900	1.0	2400	30	80	1800	1800				
	0.6	3728	1.0	3000	30	100	1800	1800				

(AGMA Class I = f_B 1.0 - 1.39 II = f_B 1.4 - 1.99 III = f_B ≥ 2.0)

Send Quote Requests to info@automatedpt.com
Call +1(800)985-6929 To Order or Order Online At Nordgearmotors.com

NORD DRIVESYSTEMS

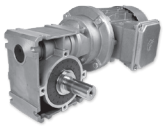

0.33 hp - FLEXBLOC™ Motorized C-Face Reducers

RATINGS

Motor Power P_1 [hp]	Output Speed n_2 [rpm]	Output Torque T_2 [lb-in]	Service Factor f_B	Total Ratio i_{tot}	Worm Ratio i_{worm}	2nd Ratio i_{2nd}	OHL F_R [lb]	OHL Flange Unit F_{RF} [lb]	Model Type	Approx. Weight [lb]	Config. Page	Dim. Page
0.33	342	54	3.8	5	5		248	173	SK 1SI31 - 56C - 71S/4	15	79	94
	228	77	3.1	7.5	7.5		284	196				
	171	99	2.3	10	10		308	214				
	137	124	1.7	12.5	12.5		326	227				
	114	133	1.9	15	15		347	234				
	86	168	1.4	20	20		376	232				
	68	201	1.1	25	25		401	230				
	57	208	1.3	30	30		405	230				
	43	252	1.0	40	40		405	227				
	34	286	0.8	50	50		405	225				
	342	55	6.1	5	5		596	414	SK 1SI40 - 56C - 71S/4	17	81	98
	228	79	4.9	7.5	7.5		682	414				
	171	103	3.6	10	10		720	414				
	137	124	2.9	12.5	12.5		720	414				
	114	141	3.1	15	15		720	414				
	86	178	2.2	20	20		720	414				
	68	213	1.7	25	25		720	414				
	57	226	2.0	30	30		720	412				
	43	277	1.5	40	40		720	412				
	34	321	1.2	50	50		720	410				
	29	356	1.0	60	60		720	410				
	21	415	0.8	80	80		720	407				
	342	56	10.4	5	5		1080	826	SK 1SI50 - 56C - 71S/4	21	83	102
	228	82	8.5	7.5	7.5		1080	844				
	171	106	6.2	10	10		1080	844				
	137	124	5.2	12.5	12.5		1080	844				
	114	148	5.2	15	15		1080	842				
	86	190	3.8	20	20		1080	842				
	68	229	2.9	25	25		1080	842				
	57	245	3.3	30	30		1080	842				
	43	306	2.4	40	40		1080	842				
	34	358	1.9	50	50		1080	842				
	29	400	1.6	60	60		1080	839				
	21	474	1.2	80	80		1080	839				
	17	531	1.0	100	100		1080	837				
	342	57	14.3	5	5		1418	779	SK 1SI63 - 56C - 71S/4	29	85	106
	228	83	14.3	7.5	7.5		1418	779				
	171	109	10.9	10	10		1418	779				
	137	124	9.2	12.5	12.5		1418	779				
	114	154	8.9	15	15		1418	779				
	86	198	6.4	20	20		1418	779				
	68	238	5.0	25	25		1418	779				
	57	259	5.5	30	30		1418	779				
	43	326	4.0	40	40		1418	779				
	34	383	3.2	50	50		1418	776				
	29	437	2.6	60	60		1418	776				
	21	524	2.0	80	80		1418	774				
	17	605	1.6	100	100		1418	774				

(AGMA Class I = f_B 1.0 - 1.39 II = f_B 1.4 - 1.99 III = f_B ≥ 2.0)

Send Quote Requests to info@automatedpt.com
Call +1(800)985-6929 To Order or Order Online At Nordgearmotors.com

0.33 hp - FLEXBLOC™ Motorized C-Face Reducers

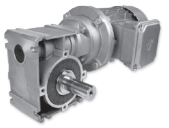

NORD DRIVESYSTEMS

RATINGS

Motor Power P_1 [hp]	Output Speed n_2 [rpm]	Output Torque T_2 [lb-in]	Service Factor f_B	Total Ratio i_{tot}	Worm Ratio i_{worm}	2nd Ratio i_{2nd}	OHL F_R [lb]	OHL Flange Unit F_{RF} [lb]	Model Type	Approx. Weight [lb]	Config. Page	Dim. Page
0.33	342	57	30.2	5	5		1800	1800	SK 1SI75 - 56C - 71S/4	38	87	110
	228	84	24.6	7.5	7.5		1800	1800				
	171	111	18.1	10	10		1800	1800				
	137	124	15.5	12.5	12.5		1800	1800				
	114	158	14.8	15	15		1800	1800				
	86	205	10.6	20	20		1800	1800				
	68	250	8.1	25	25		1800	1800				
	57	259	7.4	30	30		1800	1800				
	43	346	6.4	40	40		1800	1800				
	34	414	5.0	50	50		1800	1800				
	29	474	4.1	60	60		1800	1800				
	21	583	3.1	80	80		1800	1800				
	17	667	2.5	100	100		1800	1800				
	34	500	1.1	50	5	10	720	403	SK 1SI40/H10 - 56C - 71S/4	19	81	114
	23	704	0.9	75	7.5	10	720	389				
	34	513	1.8	50	5	10	1080	839	SK 1SI50/H10 - 56C - 71S/4	22	83	114
	23	723	1.6	75	7.5	10	1080	835				
	17	927	1.2	100	10	10	1080	828				
	14	1128	0.9	125	12.5	10	1080	821				
	11	1223	1.0	150	15	10	1080	817				
	8.6	1507	0.8	200	20	10	1080	803				
	34	519	1.8	50	5	10	1418	774	SK 1SI63/H10 - 56C - 71S/4	30	85	114
	23	732	1.8	75	7.5	10	1418	772				
	17	939	1.8	100	10	10	1418	765				
	14	1128	1.6	125	12.5	10	1418	758				
	11	1260	1.8	150	15	10	1418	754				
	8.6	1557	1.3	200	20	10	1418	740				
	6.8	1823	1.1	250	25	10	1418	725				
	5.7	1891	1.2	300	30	10	1418	720				
	4.3	2274	0.9	400	40	10	1415	691				
	3.4	2533	0.8	500	50	10	1368	668				
	11	778	0.8	150	30	5	720	383	SK 1SI40/31 - 56C - 71S/4	20	81	116
	11	853	1.4	150	30	5	1080	830	SK 1SI50/31 - 56C - 71S/4	24	83	116
	7.6	1140	1.1	225	30	7.5	1080	819				
	5.7	1446	0.9	300	30	10	1080	806				
	4.6	1483	0.9	375	30	12.5	1080	803				

(AGMA Class I = f_B 1.0 - 1.39 II = f_B 1.4 - 1.99 III = f_B ≥ 2.0)

Send Quote Requests to info@automatedpt.com
Call +1(800)985-6929 To Order or Order Online At Nordgearmotors.com

NORD DRIVESYSTEMS

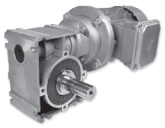

0.33 hp, 0.5 hp - FLEXBLOC™ Motorized C-Face Reducers

Motor Power P_1 [hp]	Output Speed n_2 [rpm]	Output Torque T_2 [lb-in]	Service Factor f_B	Total Ratio i_{tot}	Worm Ratio i_{worm}	2nd Ratio i_{2nd}	OHL F_R [lb]	OHL Flange Unit F_{RF} [lb]	Model Type	Approx. Weight [lb]	Config. Page	Dim. Page
0.33	11	890	2.4	150	30	5	1418	767	SK 1SI63/31 - 56C - 71S/4	32	85	116
	7.6	1195	1.9	225	30	7.5	1418	756				
	5.7	1520	1.5	300	30	10	1418	740				
	4.6	1483	1.6	375	30	12.5	1418	743				
	3.8	1946	1.2	450	30	15	1418	716				
	2.9	2372	1.0	600	30	20	1397	682				
	2.3	2780	0.9	750	30	25	1316	641				
	1.9	2891	0.9	900	30	30	1289	630				
	1.4	3410	0.8	1200	30	40	1148	560				
	11	890	3.2	150	30	5	1800	1800	SK 1SI75/40 - 56C - 71S/4	44	87	116
	7.6	1223	2.5	225	30	7.5	1800	1800				
	5.7	1557	2.0	300	30	10	1800	1800				
	4.6	1483	2.1	375	30	12.5	1800	1800				
	3.8	2002	1.6	450	30	15	1800	1800				
	2.9	2447	1.4	600	30	20	1800	1800				
	2.3	2873	1.2	750	30	25	1800	1800				
	1.9	3003	1.1	900	30	30	1800	1800				
	1.4	3559	1.0	1200	30	40	1800	1800				
	1.1	4078	0.9	1500	30	50	1800	1800				
	0.9	4448	0.8	1800	30	60	1800	1800				
	0.6	4819	0.8	3000	30	100	1800	1800				
0.5	344	79	2.6	5	5		241	167	SK 1SI31 - 56C - 71L/4	17	79	94
	229	113	2.1	7.5	7.5		272	189				
	172	145	1.6	10	10		295	205				
	138	182	1.2	12.5	12.5		311	216				
	115	196	1.3	15	15		329	230				
	86	247	1.0	20	20		356	227				
	57	308	0.9	30	30		398	223				
	344	81	4.2	5	5		590	414	SK 1SI40 - 56C - 71L/4	19	81	98
	229	116	3.4	7.5	7.5		673	414				
	172	151	2.5	10	10		720	414				
	138	182	2.0	12.5	12.5		720	414				
	115	207	2.1	15	15		720	414				
	86	262	1.5	20	20		720	412				
	69	314	1.2	25	25		720	410				
	57	333	1.3	30	30		720	410				
	43	407	1.0	40	40		720	407				
	34	473	0.8	50	50		720	403				

(AGMA Class I = f_B 1.0 - 1.39 II = f_B 1.4 - 1.99 III = f_B ≥ 2.0)

Send Quote Requests to info@automatedpt.com
Call +1(800)985-6929 To Order or Order Online At Nordgearmotors.com

0.5 hp - FLEXBLOC™ Motorized C-Face Reducers

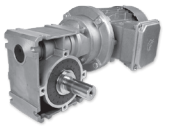

NORD DRIVESYSTEMS

RATINGS

Motor Power P_1 [hp]	Output Speed n_2 [rpm]	Output Torque T_2 [lb-in]	Service Factor f_B	Total Ratio i_{tot}	Worm Ratio i_{worm}	2nd Ratio i_{2nd}	OHL F_R [lb]	OHL Flange Unit F_{RF} [lb]	Model Type	Approx. Weight [lb]	Config. Page	Dim. Page
0.5	344	83	7.1	5	5		1080	821	SK 1SI50 - 56C - 71L/4	23	83	102
	229	120	5.8	7.5	7.5		1080	844				
	172	156	4.2	10	10		1080	842				
	138	182	3.5	12.5	12.5		1080	842				
	115	218	3.5	15	15		1080	842				
	86	280	2.6	20	20		1080	842				
	69	336	2.0	25	25		1080	842				
	57	360	2.2	30	30		1080	842				
	43	451	1.6	40	40		1080	839				
	34	527	1.3	50	50		1080	837				
	29	589	1.1	60	60		1080	837				
	22	698	0.8	80	80		1080	835				
	344	84	9.7	5	5		1418	779	SK 1SI63 - 56C - 71L/4	31	85	106
	229	123	9.7	7.5	7.5		1418	779				
	172	160	7.4	10	10		1418	779				
	138	182	6.3	12.5	12.5		1418	779				
	115	226	6.1	15	15		1418	779				
	86	291	4.4	20	20		1418	779				
	69	350	3.4	25	25		1418	779				
	57	382	3.7	30	30		1418	776				
	43	480	2.7	40	40		1418	776				
	34	564	2.2	50	50		1418	774				
	29	644	1.8	60	60		1418	772				
	22	771	1.4	80	80		1418	770				
	17	891	1.1	100	100		1418	767				
	344	85	20.5	5	5		1800	1800	SK 1SI75 - 56C - 71L/4	40	87	110
	229	124	16.7	7.5	7.5		1800	1800				
	172	164	12.3	10	10		1800	1800				
	138	182	10.5	12.5	12.5		1800	1800				
	115	232	10.1	15	15		1800	1800				
	86	302	7.2	20	20		1800	1800				
	69	368	5.5	25	25		1800	1800				
	57	382	5.1	30	30		1800	1800				
	43	509	4.3	40	40		1800	1800				
	34	609	3.4	50	50		1800	1800				
	29	698	2.8	60	60		1800	1800				
	22	858	2.1	80	80		1800	1800				
	17	982	1.7	100	100		1800	1800				
	34	755	1.2	50	5	10	1080	833	SK 1SI50/H10 - 56C - 71L/4	24	83	114
	23	1064	1.1	75	7.5	10	1080	824				
	17	1364	0.8	100	10	10	1080	810				
	34	764	1.2	50	5	10	1418	770	SK 1SI63/H10 - 56C - 71L/4	32	85	114
	23	1077	1.2	75	7.5	10	1418	761				
	17	1382	1.2	100	10	10	1418	747				
	14	1659	1.1	125	12.5	10	1418	734				
	11	1854	1.2	150	15	10	1418	722				
	8.6	2291	0.9	200	20	10	1411	689				
	5.7	2782	0.8	300	30	10	1316	641				

(AGMA Class I = f_B 1.0 - 1.39 II = f_B 1.4 - 1.99 III = f_B ≥ 2.0)

Send Quote Requests to info@automatedpt.com
Call +1(800)985-6929 To Order or Order Online At Nordgearmotors.com

NORD DRIVESYSTEMS

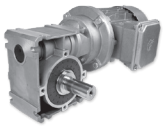

0.5 hp , 0.75 hp - FLEXBLOC™ Motorized C-Face Reducers

RATINGS

Motor Power P_1 [hp]	Output Speed n_2 [rpm]	Output Torque T_2 [lb-in]	Service Factor f_B	Total Ratio i_{tot}	Worm Ratio i_{worm}	2nd Ratio i_{2nd}	OHL F_R [lb]	OHL Flange Unit F_{RF} [lb]	Model Type	Approx. Weight [lb]	Config. Page	Dim. Page
0.5	11	1254	0.9	150	30	5	1080	815	SK 1SI50/31 - 56C - 71L/4	26	83	116
	11	1309	1.6	150	30	5	1418	752	SK 1SI63/31 - 56C - 71L/4	34	85	116
	7.6	1759	1.3	225	30	7.5	1418	727				
	5.7	2236	1.0	300	30	10	1418	693				
	4.6	2182	1.1	375	30	12.5	1418	698				
	3.8	2864	0.8	450	30	15	1296	632				
	11	1309	2.2	150	30	5	1800	1800	SK 1SI75/40 - 56C - 71L/4	46	87	116
	7.6	1800	1.7	225	30	7.5	1800	1800				
	5.7	2291	1.4	300	30	10	1800	1800				
	4.6	2182	1.5	375	30	12.5	1800	1800				
	3.8	2945	1.1	450	30	15	1800	1800				
	2.9	3600	0.9	600	30	20	1800	1800				
	2.3	4227	0.8	750	30	25	1800	1800				
	1.9	4418	0.8	900	30	30	1800	1800				
0.75	342	123	2.7	5	5		583	414	SK 1SI40 - 56C - 80S/4	23	81	98
	228	176	2.2	7.5	7.5		662	414				
	171	230	1.6	10	10		720	412				
	137	277	1.3	12.5	12.5		720	412				
	114	316	1.4	15	15		720	410				
	86	399	1.0	20	20		720	407				
	68	477	0.8	25	25		720	403				
	57	507	0.9	30	30		720	403				
	342	126	4.6	5	5		1080	817	SK 1SI50 - 56C - 80S/4	27	83	102
	228	183	3.8	7.5	7.5		1080	842				
	171	238	2.8	10	10		1080	842				
	137	277	2.3	12.5	12.5		1080	842				
	114	332	2.3	15	15		1080	842				
	86	426	1.7	20	20		1080	839				
	68	512	1.3	25	25		1080	839				
	57	548	1.5	30	30		1080	837				
	43	686	1.1	40	40		1080	835				
	34	803	0.8	50	50		1080	833				
	342	127	6.4	5	5		1418	779	SK 1SI63 - 56C - 80S/4	34	85	106
	228	187	6.4	7.5	7.5		1418	779				
	171	244	4.9	10	10		1418	779				
	137	277	4.1	12.5	12.5		1418	779				
	114	345	4.0	15	15		1418	779				
	86	443	2.9	20	20		1418	776				
	68	533	2.2	25	25		1418	774				
	57	581	2.4	30	30		1418	774				
	43	731	1.8	40	40		1418	772				
	34	858	1.4	50	50		1418	767				
	29	980	1.2	60	60		1418	763				
	21	1174	0.9	80	80		1418	756				

(AGMA Class I = f_B 1.0 - 1.39 II = f_B 1.4 - 1.99 III = f_B ≥ 2.0)

Send Quote Requests to info@automatedpt.com
Call +1(800)985-6929 To Order or Order Online At Nordgearmotors.com

0.75 hp, 1.0 hp - FLEXBLOC™ Motorized C-Face Reducers

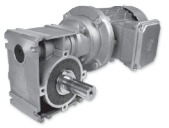

NORD DRIVESYSTEMS

RATINGS

Motor Power P_1 [hp]	Output Speed n_2 [rpm]	Output Torque T_2 [lb-in]	Service Factor f_B	Total Ratio i_{tot}	Worm Ratio i_{worm}	2nd Ratio i_{2nd}	OHL F_R [lb]	OHL Flange Unit F_{RF} [lb]	Model Type	Approx. Weight [lb]	Config. Page	Dim. Page
0.75	342	129	13.5	5	5		1800	1800	SK 1SI75 - 56C - 80S/4	44	87	110
	228	189	11.0	7.5	7.5		1800	1800				
	171	249	8.1	10	10		1800	1800				
	137	277	6.9	12.5	12.5		1800	1800				
	114	353	6.6	15	15		1800	1800				
	86	459	4.7	20	20		1800	1800				
	68	560	3.6	25	25		1800	1800				
	57	581	3.3	30	30		1800	1800				
	43	775	2.9	40	40		1800	1800				
	34	927	2.2	50	50		1800	1800				
	29	1063	1.8	60	60		1800	1800				
	21	1306	1.4	80	80		1800	1800				
	17	1495	1.1	100	100		1800	1800				
	11	1993	1.4	150	30	5	1800	1800	SK 1SI75/40 - 56C - 80S/4	49	87	116
	7.6	2740	1.1	225	30	7.5	1800	1800				
	5.7	3487	0.9	300	30	10	1800	1800				
	4.6	3321	1.0	375	30	12.5	1800	1800				
1.0	330	171	2.0	5	5		576	414	SK 1SI40 - 56C - 80L/4	25	81	98
	220	245	1.6	7.5	7.5		655	412	SK 1SI40 - 56C - 80LH/4			
	165	319	1.2	10	10		713	410	SK 1SI40 - 56C - 80LP/4			
	132	384	0.9	12.5	12.5		720	407				
	110	438	1.0	15	15		720	405				
	350	161	2.1	5	5		576	414	SK 1SI40 - 140TC - 80LH/4	25	81	98
	233	231	1.7	7.5	7.5		655	412	SK 1SI40 - 140TC - 80LP/4			
	175	301	1.2	10	10		713	410				
	140	362	1.0	12.5	12.5		720	407				
	117	412	1.1	15	15		720	405				
	330	175	3.3	5	5		1080	819	SK 1SI50 - 56C - 80L/4	29	83	102
	220	254	2.7	7.5	7.5		1080	842	SK 1SI50 - 56C - 80LH/4			
	165	330	2.0	10	10		1080	842	SK 1SI50 - 56C - 80LP/4			
	132	384	1.7	12.5	12.5		1080	839				
	110	461	1.7	15	15		1080	839				
	83	592	1.2	20	20		1080	837				
	66	711	0.9	25	25		1080	835				
	55	761	1.0	30	30		1080	833				
	41	953	0.8	40	40		1080	828				
	350	165	3.5	5	5		1080	819	SK 1SI50 - 140TC - 80LH/4	29	83	102
	233	240	2.9	7.5	7.5		1080	842	SK 1SI50 - 140TC - 80LP/4			
	175	311	2.1	10	10		1080	842				
	140	362	1.8	12.5	12.5		1080	839				
	117	433	1.8	15	15		1080	839				
	88	555	1.3	20	20		1080	837				
	70	670	1.0	25	25		1080	835				
	58	722	1.1	30	30		1080	833				
	44	888	0.8	40	40		1080	828				

(Model type in blue is an energy efficient motor)
(Model type in light blue is a premium efficient motor)

(AGMA Class I = f_B 1.0 - 1.39 II = f_B 1.4 - 1.99 III = f_B ≥ 2.0)

Send Quote Requests to info@automatedpt.com
Call +1(800)985-6929 To Order or Order Online At Nordgearmotors.com

NORD DRIVESYSTEMS

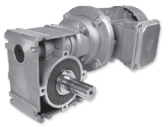

1.0 hp - FLEXBLOC™ Motorized C-Face Reducers

RATINGS

Motor Power P_1 [hp]	Output Speed n_2 [rpm]	Output Torque T_2 [lb-in]	Service Factor f_B	Total Ratio i_{tot}	Worm Ratio i_{worm}	2nd Ratio i_{2nd}	OHL F_R [lb]	OHL Flange Unit F_{RF} [lb]	Model Type	Approx. Weight [lb]	Config. Page	Dim. Page
1.0	330	177	4.6	5	5		1418	779	SK 1SI63 - 56C - 80L/4	37	85	106
	220	259	4.6	7.5	7.5		1418	779	SK 1SI63 - 56C - 80LH/4			
	165	338	3.5	10	10		1418	779	SK 1SI63 - 56C - 80LP/4			
	132	384	3.0	12.5	12.5		1418	776				
	110	478	2.9	15	15		1418	776				
	83	615	2.1	20	20		1418	774				
	66	740	1.6	25	25		1418	770				
	55	807	1.8	30	30		1418	770				
	41	1014	1.3	40	40		1418	763				
	33	1191	1.0	50	50		1418	756				
	28	1360	0.8	60	60		1418	749				
	350	167	6.3	5	5		1418	779	SK 1SI63 - 140TC - 80LH/4	37	85	106
	233	245	5.0	7.5	7.5		1418	779	SK 1SI63 - 140TC - 80LP/4			
	175	319	3.7	10	10		1418	779				
	140	362	3.2	12.5	12.5		1418	776				
	117	449	3.1	15	15		1418	776				
	88	577	2.2	20	20		1418	774				
	70	698	1.7	25	25		1418	770				
	58	765	1.9	30	30		1418	770				
	44	951	1.4	40	40		1418	763				
	35	1123	1.1	50	50		1418	756				
	29	1290	0.9	60	60		1418	749				
	330	179	9.7	5	5		1800	1800	SK 1SI75 - 56C - 80L/4	46	87	110
	220	262	7.9	7.5	7.5		1800	1800	SK 1SI75 - 56C - 80LH/4			
	165	346	5.8	10	10		1800	1800	SK 1SI75 - 56C - 80LP/4			
	132	384	5.0	12.5	12.5		1800	1800				
	110	490	4.8	15	15		1800	1800				
	83	638	3.4	20	20		1800	1800				
	66	778	2.6	25	25		1800	1800				
	55	807	2.4	30	30		1800	1800				
	41	1076	2.1	40	40		1800	1800				
	33	1287	1.6	50	50		1800	1800				
	28	1475	1.3	60	60		1800	1800				
	21	1813	1.0	80	80		1800	1800				
	17	2075	0.8	100	100		1800	1800				
	350	169	10.2	5	5		1800	1800	SK 1SI75 - 140TC - 80LH/4	46	87	110
	233	247	8.3	7.5	7.5		1800	1800	SK 1SI75 - 140TC - 80LP/4			
	175	326	6.1	10	10		1800	1800				
	140	362	5.3	12.5	12.5		1800	1800				
	117	461	5.0	15	15		1800	1800				
	88	598	3.6	20	20		1800	1800				
	70	734	2.8	25	25		1800	1800				
	58	765	2.5	30	30		1800	1800				
	44	1009	2.2	40	40		1800	1800				
	35	1214	1.7	50	50		1800	1800				
	29	1399	1.4	60	60		1800	1800				
	22	1700	1.0	80	80		1800	1800				
	18	1902	0.9	100	100		1800	1800				

(Model type in blue is an energy efficient motor)
(Model type in light blue is a premium efficient motor)

(AGMA Class I = f_B 1.0 - 1.39 II = f_B 1.4 - 1.99 III = f_B ≥ 2.0)

Send Quote Requests to info@automatedpt.com
Call +1(800)985-6929 To Order or Order Online At Nordgearmotors.com

1.0 hp, 1.5 hp, 2.0 hp - FLEXBLOC™ Motorized C-Face Reducers

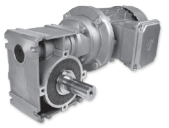

NORD DRIVESYSTEMS

RATINGS

Motor Power P_1 [hp]	Output Speed n_2 [rpm]	Output Torque T_2 [lb-in]	Service Factor f_B	Total Ratio i_{tot}	Worm Ratio i_{worm}	2nd Ratio i_{2nd}	OHL F_R [lb]	OHL Flange Unit F_{RF} [lb]	Model Type	Approx. Weight [lb]	Config. Page	Dim. Page
1.0	11	2766	1.0	150	30	5	1800	1800	SK 1SI75/40 - 56C - 80L/4	52	87	116
	7.3	3803	0.8	225	30	7.5	1800	1800	SK 1SI75/40 - 56C - 80LH/4			
									SK 1SI75/40 - 56C - 80LP/4			
	12	2536	1.1	150	30	5	1800	1800	SK 1SI75/40 - 140TC - 80LH/4	52	87	116
	8	3486	0.9	225	30	7.5	1800	1800	SK 1SI75/40 - 140TC - 80LP/4			
1.5	348	242	1.4	5	5		554	403	SK 1SI40 - 140TC - 90SH/4	32	81	98
	232	347	1.1	7.5	7.5		628	410	SK 1SI40 - 140TC - 90SP/4			
	174	451	0.8	10	10		677	403				
	348	247	2.4	5	5		1078	803	SK 1SI50 - 140TC - 90SH/4	36	83	102
	232	359	1.9	7.5	7.5		1080	842	SK 1SI50 - 140TC - 90SP/4			
	174	468	1.4	10	10		1080	839				
	139	545	1.2	12.5	12.5		1080	837				
	116	655	1.2	15	15		1080	835				
	87	838	0.9	20	20		1080	830				
	348	250	4.2	5	5		1418	779	SK 1SI63 - 140TC - 90SH/4	43	85	106
	232	354	3.5	7.5	7.5		1418	776	SK 1SI63 - 140TC - 90SP/4			
	174	479	2.5	10	10		1418	776				
	139	545	2.1	12.5	12.5		1418	774				
	116	677	2.0	15	15		1418	772				
	87	870	1.5	20	20		1418	765				
	70	1042	1.1	25	25		1418	761				
	58	1143	1.2	30	30		1418	756				
	44	1437	0.9	40	40		1418	743				
	348	253	6.8	5	5		1800	1800	SK 1SI75 - 140TC - 90SH/4	53	87	110
	232	371	5.5	7.5	7.5		1800	1800	SK 1SI75 - 140TC - 90SP/4			
	174	489	4.1	10	10		1800	1800				
	139	545	3.5	12.5	12.5		1800	1800				
	116	694	3.3	15	15		1800	1800				
	87	904	2.4	20	20		1800	1800				
	70	1096	1.8	25	25		1800	1800				
	58	1143	1.7	30	30		1800	1800				
	44	1506	1.5	40	40		1800	1800				
	35	1812	1.1	50	50		1800	1800				
	29	2089	0.9	60	60		1800	1800				
2.0	349	328	1.8	5	5		1060	792	SK 1SI50 - 140TC - 90LH/4	40	83	102
	233	475	1.5	7.5	7.5		1080	839	SK 1SI50 - 140TC - 90LP/4			
	175	619	1.1	10	10		1080	835				
	140	721	0.9	12.5	12.5		1080	833				
	116	871	0.9	15	15		1080	828				

(AGMA Class I = f_B 1.0 - 1.39 II = f_B 1.4 - 1.99 III = f_B ≥ 2.0)

(Model type in blue is an energy efficient motor)
(Model type in light blue is a premium efficient motor)

Send Quote Requests to info@automatedpt.com
Call +1(800)985-6929 To Order or Order Online At Nordgearmotors.com

NORD DRIVESYSTEMS

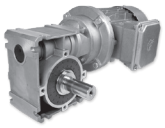

2.0 hp, 3.0 hp, 5.0 hp - FLEXBLOC™ Motorized C-Face Reducers

RATINGS

Motor Power P_1 [hp]	Output Speed n_2 [rpm]	Output Torque T_2 [lb-in]	Service Factor f_B	Total Ratio i_{tot}	Worm Ratio i_{worm}	2nd Ratio i_{2nd}	OHL F_R [lb]	OHL Flange Unit F_{RF} [lb]	Model Type	Approx. Weight [lb]	Config. Page	Dim. Page
2.0	349	332	3.1	5	5		1418	779	SK 1SI63 - 140TC - 90LH/4	48	85	106
	233	486	2.5	7.5	7.5		1418	776	SK 1SI63 - 140TC - 90LP/4			
	175	634	1.9	10	10		1418	772				
	140	720	1.6	12.5	12.5		1418	770				
	116	901	1.5	15	15		1418	765				
	87	1158	1.1	20	20		1418	756				
	70	1385	0.9	25	25		1418	745				
	58	1520	0.9	30	30		1418	738				
	349	336	5.1	5	5		1800	1800	SK 1SI75 - 140TC - 90LH/4	57	87	110
	233	492	4.2	7.5	7.5		1800	1800	SK 1SI75 - 140TC - 90LP/4			
	175	648	3.1	10	10		1800	1800				
	140	720	2.7	12.5	12.5		1800	1800				
	116	923	2.5	15	15		1800	1800				
	87	1201	1.8	20	20		1800	1800				
	70	1448	1.4	25	25		1800	1800				
	58	1520	1.3	30	30		1800	1800				
	44	2003	1.1	40	40		1800	1800				
	35	2410	0.8	50	50		1800	1800				
3.0	353	499	3.4	5	5		1800	1773	SK 1SI75 - 180TC - 100LH/4	66	87	110
	235	733	2.8	7.5	7.5		1800	1800	SK 1SI75 - 180TC - 100LP/4			
	177	962	2.1	10	10		1800	1800				
	141	1074	1.8	12.5	12.5		1800	1800				
	118	1364	1.7	15	15		1800	1800				
	88	1785	1.2	20	20		1800	1800				
	71	2160	0.9	25	25		1800	1800				
	59	2244	0.9	30	30		1800	1800				
5.0	354	828	2.1	5	5		1800	1730	SK 1SI75 - 180TC - 112MH/4	73	87	110
	236	1215	1.7	7.5	7.5		1800	1800	SK 1SI75 - 180TC - 112MP/4			
	177	1603	1.2	10	10		1800	1800				
	142	1777	1.1	12.5	12.5		1800	1800				
	118	2270	1.0	15	15		1800	1800				

(Model type in blue is an energy efficient motor)
(Model type in light blue is a premium efficient motor)

(AGMA Class I = f_B 1.0 - 1.39 II = f_B 1.4 - 1.99 III = f_B ≥ 2.0)

Send Quote Requests to info@automatedpt.com
Call +1(800)985-6929 To Order or Order Online At Nordgearmotors.com

FLEXBLOC™
Single Worm Ratings

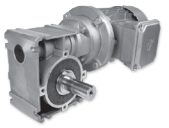

NORD DRIVESYSTEMS

RATINGS

Gearbox Size					SK 1SI31			SK 1SI40			SK 1SI50			SK 1SI63			SK 1SI75		
Total Ratio	Worm Ratio	2nd Ratio	Input	Output	Max Input	Max Output	Torque	Max Input	Max Output	Torque	Max Input	Max Output	Torque	Max Input	Max Output	Torque	Max Input	Max Output	Torque
i	i_{worm}	i_{2nd}	n_1 [rpm]	n_2 [rpm]	P_{1max} [hp]	P_{2max} [hp]	T_{2max} [lb-in]	P_{1max} [hp]	P_{2max} [hp]	T_{2max} [lb-in]	P_{1max} [hp]	P_{2max} [hp]	T_{2max} [lb-in]	P_{1max} [hp]	P_{2max} [hp]	T_{2max} [lb-in]	P_{1max} [hp]	P_{2max} [hp]	T_{2max} [lb-in]
5	5	-	1750	350	1.30	1.13	204	2.10	1.87	336	3.56	3.24	584	6.30	5.80	1044	10.36	9.64	1735
			1150	230	0.94	0.81	221	1.51	1.33	364	2.56	2.30	630	4.52	4.11	1127	7.35	6.77	1854
			850	170	0.77	0.66	243	1.24	1.08	401	2.10	1.87	694	3.72	3.34	1240	5.98	5.51	2041
			100	20	0.13	0.11	341	0.22	0.18	562	0.37	0.31	974	0.66	0.55	1740	1.07	0.91	2864
7.5	7.5	-	1750	233	1.06	0.88	239	1.69	1.44	389	2.90	2.55	690	5.05	4.55	1230	8.41	7.67	2071
			1150	153	0.76	0.62	255	1.22	1.03	423	2.11	1.82	747	3.68	3.24	1332	5.98	5.40	2218
			850	113	0.62	0.51	281	1.01	0.84	466	1.74	1.48	823	3.02	2.64	1466	4.92	4.39	2441
			100	13	0.11	0.08	394	0.18	0.14	653	0.31	0.24	1154	0.54	0.44	2058	0.88	0.72	3426
10	10	-	1750	175	0.80	0.64	230	1.24	1.03	372	2.14	1.84	664	3.74	3.29	1186	6.20	5.58	2009
			1150	115	0.56	0.45	244	0.90	0.74	406	1.57	1.32	721	2.69	2.34	1285	4.40	3.92	2147
			850	85	0.46	0.36	269	0.75	0.60	446	1.29	1.07	794	2.24	1.91	1414	3.66	3.19	2363
			100	10	0.08	0.06	377	0.14	0.10	627	0.24	0.18	1114	0.41	0.31	1984	0.68	0.53	3317
12.5	12.5	-	1750	140	0.61	0.47	212	1.00	0.81	363	1.69	1.41	637	2.91	2.54	1142	4.77	4.25	1912
			1150	92	0.45	0.34	233	0.72	0.57	388	1.23	1.01	693	2.12	1.80	1233	3.46	3.01	2065
			850	68	0.37	0.28	257	0.59	0.46	427	1.02	0.82	762	1.74	1.46	1357	2.85	2.45	2273
			100	8	0.07	0.05	360	0.11	0.08	599	0.19	0.14	1070	0.33	0.24	1904	0.55	0.40	3190
15	15	-	1750	117	0.66	0.48	257	1.06	0.80	434	1.79	1.43	770	3.07	2.54	1372	5.10	4.32	2336
			1150	77	0.49	0.34	280	0.77	0.57	466	1.31	1.02	836	2.24	1.81	1487	3.68	3.04	2498
			850	57	0.40	0.28	308	0.64	0.46	513	1.10	0.83	920	1.87	1.47	1637	3.03	2.47	2750
			100	7	0.07	0.05	433	0.12	0.08	720	0.21	0.14	1292	0.36	0.24	2297	0.60	0.41	3859
20	20	-	1750	88	0.49	0.33	239	0.77	0.55	398	1.30	1.00	717	2.22	1.77	1274	3.65	3.01	2168
			1150	58	0.36	0.24	259	0.57	0.39	432	0.96	0.71	776	1.63	1.26	1380	2.64	2.12	2320
			850	43	0.30	0.19	285	0.47	0.32	475	0.79	0.58	854	1.33	1.02	1518	2.15	1.72	2553
			100	5	0.01	0.03	401	0.09	0.05	667	0.16	0.10	1198	0.27	0.17	2131	0.44	0.28	3583
25	25	-	1750	70	0.38	0.25	221	0.60	0.41	372	1.01	0.75	673	1.72	1.33	1195	2.79	2.26	2036
			1150	46	0.29	0.18	243	0.45	0.30	405	0.75	0.53	729	1.26	0.95	1296	2.04	1.59	2180
			850	34	0.24	0.14	268	0.38	0.24	446	0.63	0.43	802	1.05	0.77	1426	1.70	1.29	2399
			100	4	0.04	0.02	376	0.07	0.04	626	0.13	0.07	1126	0.22	0.13	2001	0.36	0.21	3367
					SK 1SI31 Configurations			SK 1SI40 Configurations			SK 1SI50 Configurations			SK 1SI63 Configurations			SK 1SI75 Configurations		
					📖 79			📖 81			📖 83			📖 85			📖 87		

Actual speeds and torques will vary based on the motor performance data.

Send Quote Requests to info@automatedpt.com
Call +1(800)985-6929 To Order or Order Online At Nordgearmotors.com

NORD DRIVESYSTEMS

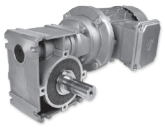

FLEXBLOC™ Single Worm Ratings

RATINGS

Gearbox Size					SK 1SI31			SK 1SI40			SK 1SI50			SK 1SI63			SK 1SI75		
Total Ratio	Worm Ratio	2nd Ratio	Input	Output	Max Input	Max Output	Torque	Max Input	Max Output	Torque	Max Input	Max Output	Torque	Max Input	Max Output	Torque	Max Input	Max Output	Torque
i	i_{worm}	i_{2nd}	n_1 [rpm]	n_2 [rpm]	P_{1max} [hp]	P_{2max} [hp]	T_{2max} [lb-in]	P_{1max} [hp]	P_{2max} [hp]	T_{2max} [lb-in]	P_{1max} [hp]	P_{2max} [hp]	T_{2max} [lb-in]	P_{1max} [hp]	P_{2max} [hp]	T_{2max} [lb-in]	P_{1max} [hp]	P_{2max} [hp]	T_{2max} [lb-in]
30	30	-	1750	58	0.44	0.25	266	0.67	0.41	442	1.11	0.74	796	1.86	1.31	1416	2.25	1.79	1929
			1150	38	0.32	0.17	287	0.50	0.29	478	0.82	0.52	861	1.38	0.93	1531	1.64	1.26	2067
			850	28	0.27	0.14	316	0.42	0.24	527	0.69	0.43	948	1.15	0.76	1685	1.38	1.02	2275
			100	3	0.05	0.02	443	0.08	0.04	739	0.15	0.07	1330	0.25	0.13	2365	0.30	0.17	3192
40	40	-	1750	44	0.34	0.17	248	0.51	0.28	407	0.83	0.51	735	1.38	0.90	1301	2.21	1.54	2212
			1150	29	0.25	0.12	263	0.38	0.20	439	0.63	0.36	790	1.03	0.64	1405	1.63	1.08	2367
			850	21	0.21	0.10	290	0.32	0.16	483	0.52	0.29	870	0.86	0.52	1547	1.36	0.88	2605
			100	3	0.04	0.02	407	0.07	0.03	678	0.11	0.05	1221	0.20	0.09	2170	0.32	0.14	3655
50	50	-	1750	35	0.27	0.13	230	0.41	0.21	381	0.65	0.38	681	1.09	0.67	1212	1.71	1.15	2062
			1150	23	0.20	0.09	246	0.31	0.15	410	0.50	0.27	738	0.81	0.48	1312	1.28	0.81	2210
			850	17	0.17	0.07	271	0.26	0.12	451	0.42	0.22	812	0.70	0.39	1444	1.09	0.66	2432
			100	2	0.03	0.01	380	0.06	0.02	633	0.09	0.04	1140	0.16	0.06	2027	0.26	0.11	3413
60	60	-	1750	29	0.23	0.10	212	0.34	0.16	354	0.55	0.30	646	0.90	0.53	1150	1.41	0.91	1956
			1150	19	0.17	0.07	232	0.26	0.12	387	0.41	0.21	697	0.68	0.38	1239	1.05	0.63	2088
			850	14	0.15	0.06	256	0.22	0.10	426	0.36	0.17	767	0.58	0.31	1364	0.90	0.52	2298
			100	2	0.03	0.01	359	0.05	0.02	598	0.08	0.03	1077	0.14	0.05	1914	0.23	0.09	3225
80	80	-	1750	22	0.18	0.07	195	0.27	0.11	327	0.43	0.21	593	0.69	0.36	1044	1.05	0.62	1779
			1150	14	0.13	0.05	212	0.20	0.08	353	0.31	0.15	636	0.50	0.26	1131	0.77	0.43	1906
			850	11	0.12	0.04	233	0.18	0.07	389	0.29	0.12	700	0.47	0.21	1245	0.72	0.35	2098
			100	1	0.02	0.01	327	0.04	0.01	545	0.06	0.02	983	0.11	0.03	1748	0.17	0.06	2944
100	100	-	1750	18	0.17	0.05	186	0.23	0.08	301	0.36	0.15	549	0.57	0.27	974	0.88	0.46	1655
			1150	12	0.13	0.04	197	0.18	0.06	329	0.28	0.11	592	0.45	0.19	1053	0.68	0.32	1774
			850	9	0.10	0.03	217	0.15	0.05	362	0.24	0.09	652	0.37	0.16	1159	0.57	0.26	1953
			100	1	0.02	0.005	305	0.03	0.01	508	0.06	0.01	915	0.10	0.03	1627	0.16	0.04	2740
					SK 1SI31 Configurations			SK 1SI40 Configurations			SK 1SI50 Configurations			SK 1SI63 Configurations			SK 1SI75 Configurations		
					📖 79			📖 81			📖 83			📖 85			📖 87		

Actual speeds and torques will vary based on the motor performance data.

Send Quote Requests to info@automatedpt.com
Call +1(800)985-6929 To Order or Order Online At Nordgearmotors.com

FLEXBLOC™ 2-Stage Helical Worm Ratings

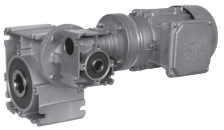

NORD DRIVESYSTEMS

RATINGS

Gearbox Size					SK 1SI40/H10			SK 1SI50/H10			SK 1SI63/H10		
Total Ratio	Worm Ratio	2nd Ratio	Input	Output	Max Input	Max Output	Torque	Max Input	Max Output	Torque	Max Input	Max Output	Torque
i	i_{worm}	i_{2nd}	n_1 [rpm]	n_2 [rpm]	P_{1max} [hp]	P_{2max} [hp]	T_{2max} [lb-in]	P_{1max} [hp]	P_{2max} [hp]	T_{2max} [lb-in]	P_{1max} [hp]	P_{2max} [hp]	T_{2max} [lb-in]
50	5	10	1750	35	0.38	0.30	549	0.50	0.41	742	0.50	0.42	751
			1150	23	0.25	0.20	557	0.43	0.35	964	0.50	0.41	1115
			850	17	0.19	0.15	573	0.33	0.27	993	0.50	0.41	1508
			100	2	0.03	0.02	673	0.05	0.04	1166	0.08	0.07	2084
75	7.5	10	1750	23.3	0.31	0.24	637	0.50	0.39	1061	0.50	0.40	1074
			1150	15.3	0.21	0.16	647	0.35	0.28	1143	0.50	0.40	1626
			850	11.3	0.16	0.12	666	0.27	0.21	1177	0.48	0.38	2098
			100	1.3	0.02	0.02	782	0.04	0.03	1383	0.07	0.05	2464
100	10	10	1750	17.5	0.24	0.17	611	0.41	0.30	1080	0.50	0.37	1320
			1150	11.5	0.16	0.11	620	0.28	0.20	1103	0.50	0.36	1954
			850	8.5	0.12	0.09	639	0.21	0.15	1136	0.37	0.27	2024
			100	1.0	0.02	0.01	750	0.03	0.02	1334	0.05	0.04	2376
125	12.5	10	1750	14.0	0.19	0.13	584	0.32	0.23	1044	0.50	0.36	1631
			1150	9.2	0.13	0.09	593	0.22	0.15	1059	0.38	0.28	1885
			850	6.8	0.10	0.07	611	0.17	0.12	1091	0.30	0.21	1942
			100	0.8	0.01	0.01	718	0.02	0.02	1281	0.04	0.03	2280
150	15	10	1750	11.7	0.21	0.13	699	0.36	0.23	1257	0.50	0.33	1772
			1150	7.7	0.14	0.09	713	0.24	0.16	1278	0.42	0.28	2274
			850	5.7	0.11	0.07	735	0.19	0.12	1317	0.33	0.21	2343
			100	0.7	0.02	0.01	863	0.03	0.02	1547	0.05	0.03	2751
200	20	10	1750	8.8	0.15	0.09	646	0.27	0.16	1168	0.46	0.29	2071
			1150	5.8	0.10	0.06	660	0.18	0.11	1186	0.32	0.19	2109
			850	4.3	0.08	0.05	680	0.14	0.10	1435	0.24	0.15	2173
			100	1	0.01	0.01	799	0.02	0.01	799	0.04	0.02	2552
250	25	10	1750	7	0.12	0.07	611	0.21	0.12	1097	0.37	0.22	1947
			1150	5	0.09	0.05	619	0.15	0.08	1114	0.25	0.14	1981
			850	3	0.06	0.03	638	0.11	0.06	1148	0.20	0.11	2041
			100	0.4	0.01	0.00	749	0.02	0.009	1348	0.03	0.02	2396
					SK1SI40/H10 Configuration			SK1SI50/H10 Configuration			SK1SI63/H10 Configuration		
					📖 81			📖 83			📖 85		

Actual speeds and torques will vary based on the motor performance data.

Send Quote Requests to info@automatedpt.com
Call +1(800)985-6929 To Order or Order Online At Nordgearmotors.com

NORD DRIVESYSTEMS

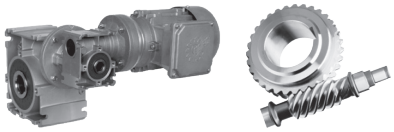

FLEXBLOC™ 2-Stage Helical Worm Ratings

RATINGS

Gearbox Size					SK 1SI40/H10			SK 1SI50/H10			SK 1SI63/H10		
Total Ratio	Worm Ratio	2nd Ratio	Input	Output	Max Input	Max Output	Torque	Max Input	Max Output	Torque	Max Input	Max Output	Torque
i	i_{worm}	i_{2nd}	n_1 [rpm]	n_2 [rpm]	P_{1max} [hp]	P_{2max} [hp]	T_{2max} [lb-in]	P_{1max} [hp]	P_{2max} [hp]	T_{2max} [lb-in]	P_{1max} [hp]	P_{2max} [hp]	T_{2max} [lb-in]
300	30	10	1750	5.8	0.14	0.07	717	0.24	0.12	1292	0.42	0.21	2301
			1150	3.8	0.10	0.04	731	0.17	0.08	1317	0.29	0.14	2341
			850	2.8	0.08	0.03	754	0.13	0.06	1356	0.22	0.11	2411
			100	0.3	0.01	0.005	885	0.02	0.008	1593	0.03	0.01	2832
400	40	10	1750	4.4	0.11	0.05	664	0.19	0.08	1186	0.32	0.15	2115
			1150	2.9	0.08	0.03	671	0.13	0.06	1208	0.22	0.10	2148
			850	2.1	0.06	0.02	691	0.10	0.04	1245	0.18	0.07	2213
			100	0.3	0.01	0.003	812	0.01	0.006	1462	0.03	0.01	2599
500	50	10	1750	4	0.09	0.03	620	0.15	0.06	1106	0.27	0.11	1974
			1150	2	0.06	0.02	626	0.11	0.04	1129	0.19	0.07	2006
			850	2	0.05	0.02	645	0.08	0.03	1163	0.15	0.06	2067
			100	0.2	0.01	0.002	758	0.01	0.004	1365	0.02	0.01	2427
600	60	10	1750	2.9	0.08	0.03	584	0.13	0.05	1044	0.23	0.09	1859
			1150	1.9	0.06	0.02	592	0.09	0.03	1066	0.16	0.06	1895
			850	1.4	0.04	0.01	610	0.07	0.02	1098	0.12	0.04	1952
			100	0.2	0.01	0.002	716	0.01	0.003	1290	0.02	0.01	2293
800	80	10	1750	2.2	0.07	0.02	531	0.11	0.03	956	0.19	0.06	1699
			1150	1.4	0.04	0.01	540	0.07	0.02	973	0.12	0.04	1730
			850	1.1	0.04	0.01	556	0.06	0.02	1002	0.10	0.03	1782
			100	0.1	0.00	0.001	653	0.01	0.002	1177	0.01	0.004	2093
1000	100	10	1750	1.8	0.06	0.01	487	0.09	0.02	894	0.16	0.04	1584
			1150	1.2	0.04	0.01	502	0.07	0.02	905	0.11	0.03	1610
			850	0.9	0.03	0.01	518	0.05	0.01	933	0.09	0.02	1659
			100	0.1	0.00	0.001	608	0.01	0.002	1096	0.01	0.003	1948
					SK1SI40/H10 Configuration			SK1SI50/H10 Configuration			SK1SI63/H10 Configuration		
					81			83			85		

Actual speeds and torques will vary based on the motor performance data.

Send Quote Requests to info@automatedpt.com
Call +1(800)985-6929 To Order or Order Online At Nordgearmotors.com

FLEXBLOC™
Double Worm Ratings

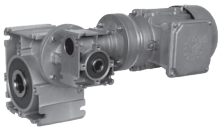

NORD DRIVESYSTEMS

RATINGS

Gearbox Size					SK 1SI40/31			SK 1SI50/31			SK 1SI63/31			SK 1SI75/40		
Total Ratio i	Worm Ratio i_{worm}	2nd Ratio i_{2nd}	Input n_1 [rpm]	Output n_2 [rpm]	Max Input P_{1max} [hp]	Max Output P_{2max} [hp]	Torque T_{2max} [lb-in]	Max Input P_{1max} [hp]	Max Output P_{2max} [hp]	Torque T_{2max} [lb-in]	Max Input P_{1max} [hp]	Max Output P_{2max} [hp]	Torque T_{2max} [lb-in]	Max Input P_{1max} [hp]	Max Output P_{2max} [hp]	Torque T_{2max} [lb-in]
150	5	30	1750	11.7	0.30	0.12	655	0.49	0.22	1177	0.83	0.39	2097	0.96	0.52	2832
			1150	7.7	0.18	0.08	674	0.29	0.15	1213	0.50	0.26	2156	0.59	0.35	2911
			850	5.7	0.14	0.06	704	0.23	0.11	1267	0.40	0.20	2252	0.47	0.27	3041
			100	0.7	0.02	0.01	861	0.04	0.02	1549	0.07	0.03	2754	0.08	0.04	3718
225	7.5	30	1750	7.8	0.22	0.09	699	0.38	0.15	1248	0.64	0.27	2221	0.73	0.37	3009
			1150	5.1	0.13	0.06	712	0.21	0.10	1282	0.37	0.18	2279	0.44	0.25	3077
			850	3.8	0.10	0.04	732	0.17	0.08	1318	0.29	0.14	2343	0.38	0.19	3163
			100	0.4	0.01	0.01	877	0.03	0.01	1578	0.04	0.02	2806	0.05	0.03	3788
300	10	30	1750	5.8	0.18	0.07	717	0.30	0.12	1292	0.52	0.21	2301	0.60	0.29	3106
			1150	3.8	0.10	0.04	731	0.17	0.08	1317	0.29	0.14	2341	0.34	0.19	3160
			850	2.8	0.08	0.03	754	0.13	0.06	1356	0.22	0.11	2411	0.27	0.15	3255
			100	0.3	0.01	0.005	885	0.02	0.01	1593	0.03	0.01	2832	0.04	0.02	3823
375	12.5	30	1750	4.7	0.16	0.05	735	0.27	0.10	1319	0.46	0.17	2345	0.53	0.23	3168
			1150	3.1	0.08	0.04	747	0.14	0.07	1344	0.24	0.12	2390	0.29	0.16	3226
			850	2.3	0.06	0.03	770	0.11	0.05	1386	0.19	0.09	2464	0.23	0.12	3327
			100	0.3	0.01	0.004	929	0.02	0.01	1673	0.03	0.01	2974	0.03	0.02	4014
450	15	30	1750	3.9	0.14	0.05	743	0.24	0.08	1345	0.42	0.15	2390	0.47	0.20	3221
			1150	2.6	0.07	0.03	762	0.12	0.06	1371	0.21	0.10	2437	0.25	0.13	3291
			850	1.9	0.05	0.02	781	0.09	0.04	1406	0.16	0.07	2500	0.19	0.10	3375
			100	0.2	0.01	0.003	959	0.01	0.01	1726	0.02	0.01	3068	0.03	0.01	4142
600	20	30	1750	2.9	0.12	0.04	770	0.20	0.06	1381	0.35	0.11	2460	0.39	0.15	3319
			1150	1.9	0.05	0.02	780	0.09	0.04	1405	0.16	0.08	2497	0.19	0.10	3371
			850	1.4	0.04	0.02	806	0.07	0.03	1451	0.12	0.06	2579	0.15	0.08	3482
			100	0.2	0.01	0.003	996	0.01	0.005	1792	0.02	0.01	3186	0.02	0.01	4301
750	25	30	1750	2.3	0.10	0.03	779	0.18	0.05	1407	0.30	0.09	2505	0.34	0.13	3381
			1150	1.5	0.04	0.02	797	0.07	0.03	1435	0.13	0.06	2552	0.16	0.08	3445
			850	1.1	0.03	0.01	827	0.06	0.03	1488	0.10	0.05	2645	0.12	0.06	3571
			100	0.1	0.00	0.002	1018	0.01	0.004	1832	0.02	0.01	3257	0.02	0.01	4397
900	30	30	1750	1.9	0.10	0.02	797	0.17	0.04	1434	0.30	0.08	2549	0.32	0.11	3434
			1150	1.3	0.04	0.02	816	0.07	0.03	1469	0.12	0.05	2611	0.14	0.07	3525
			850	0.9	0.03	0.01	840	0.05	0.02	1513	0.09	0.04	2689	0.11	0.05	3630
			100	0.1	0.00	0.002	1032	0.01	0.003	1859	0.01	0.01	3304	0.02	0.01	4460
					SK1SI40/31 Configuration			SK1SI50/31 Configuration			SK1SI63/31 Configuration			SK1SI75/40 Configuration		
					📖 81			📖 83			📖 85			📖 87		

Actual speeds and torques will vary based on the motor performance data.

Send Quote Requests to info@automatedpt.com
Call +1(800)985-6929 To Order or Order Online At Nordgearmotors.com

NORD DRIVESYSTEMS

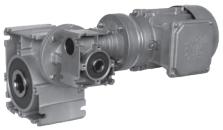

FLEXBLOC™ Double Worm Ratings

RATINGS

Gearbox Size					SK 1SI40/31			SK 1SI50/31			SK 1SI63/31			SK 1SI75/40		
Total Ratio	Worm Ratio	2nd Ratio	Input	Output	Max Input	Max Output	Torque	Max Input	Max Output	Torque	Max Input	Max Output	Torque	Max Input	Max Output	Torque
i	i_{worm}	i_{2nd}	n_1 [rpm]	n_2 [rpm]	P_{1max} [hp]	P_{2max} [hp]	T_{2max} [lb-in]	P_{1max} [hp]	P_{2max} [hp]	T_{2max} [lb-in]	P_{1max} [hp]	P_{2max} [hp]	T_{2max} [lb-in]	P_{1max} [hp]	P_{2max} [hp]	T_{2max} [lb-in]
1200	40	30	1750	1.5	0.09	0.02	823	0.15	0.03	1487	0.27	0.06	2637	0.30	0.08	3558
			1150	1.0	0.03	0.01	839	0.05	0.02	1511	0.09	0.04	2686	0.12	0.06	3626
			850	0.7	0.02	0.01	858	0.04	0.02	1544	0.07	0.03	2744	0.08	0.04	3705
			100	0.08	0.00	0.001	1051	0.01	0.003	1892	0.01	0.004	3363	0.01	0.01	4540
1500	50	30	1750	1.2	0.08	0.02	841	0.14	0.03	1513	0.26	0.05	2690	0.27	0.07	3637
			1150	0.8	0.02	0.01	853	0.04	0.02	1536	0.07	0.03	2731	0.09	0.04	3687
			850	0.6	0.02	0.01	868	0.03	0.01	1562	0.06	0.02	2777	0.07	0.03	3750
			100	0.07	0.00	0.001	1062	0.00	0.002	1912	0.01	0.004	3398	0.01	0.00	4588
1800	60	30	1750	1.0	0.07	0.01	850	0.12	0.02	1531	0.22	0.04	2726	0.24	0.06	3682
			1150	0.6	0.02	0.01	863	0.04	0.02	1553	0.06	0.03	2761	0.07	0.04	3727
			850	0.5	0.02	0.01	875	0.03	0.01	1575	0.05	0.02	2800	0.06	0.03	3779
			100	0.06	0.00	0.001	1069	0.00	0.002	1925	0.01	0.003	3422	0.01	0.00	4620
2400	80	30	1750	0.7	0.07	0.01	867	0.11	0.02	1558	0.20	0.03	2770	0.21	0.04	3744
			1150	0.5	0.02	0.01	874	0.03	0.01	1574	0.05	0.02	2798	0.06	0.03	3777
			850	0.4	0.01	0.005	883	0.02	0.01	1590	0.04	0.02	2827	0.04	0.02	3817
			100	0.04	0.00	0.001	1079	0.00	0.001	1941	0.00	0.002	3451	0.01	0.00	4660
3000	100	30	1750	0.6	0.06	0.01	876	0.11	0.01	1575	0.20	0.03	2797	0.19	0.03	3779
			1150	0.4	0.01	0.01	881	0.02	0.01	1586	0.04	0.02	2820	0.05	0.02	3807
			850	0.3	0.01	0.004	918	0.02	0.01	1653	0.03	0.01	2938	0.04	0.02	3967
			100	0.03	0.00	0.001	1084	0.00	0.001	1951	0.00	0.002	3469	0.00	0.00	4683
					SK1SI40/31 Configuration			SK1SI50/31 Configuration			SK1SI63/31 Configuration			SK1SI75/40 Configuration		
					📖 81			📖 83			📖 85			📖 87		

Actual speeds and torques will vary based on the motor performance data.

Send Quote Requests to info@automatedpt.com
Call +1(800)985-6929 To Order or Order Online At Nordgearmotors.com

FLEXBLOC™
Single Worm Selection

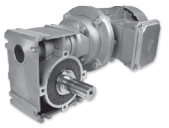

NORD DRIVESYSTEMS

RATINGS

Output Speed n_2 [rpm]	Total Ratio i	Worm Ratio i_{worm}	2nd Ratio i_{2nd}	Motor Power ~ Based on 1750 rpm: 0.16 hp Output Torque (T_2) [lb-in]	0.25 hp [lb-in]	0.33 hp [lb-in]	0.50 hp [lb-in]	0.75 hp [lb-in]	1.0 hp [lb-in]	1.5 hp [lb-in]	2.0 hp [lb-in]	3.0 hp [lb-in]	5.0 hp [lb-in]	Gear Max Torque T_{2max} [lb-in]	Max Input Power P_{1max} [hp]	Gear Unit	NEMA Adapter	Config. Page
350	5	5	-	26	42	54	79	120						204	1.30	SK 1SI31	48C	79
				26	42	54	79	120	166					204	1.30	SK 1SI31	56C	79
				27	43	55	81	123	171					336	2.10	SK 1SI40	56C	81
									171	254				336	2.10	SK 1SI40	140TC	81
				27	43	56	83	126	175					584	3.56	SK 1SI50	56C	83
									175	259	345			584	3.56	SK 1SI50	140TC	83
				27	44	57	84	127	177					1044	6.30	SK 1SI63	56C	85
									177	262	349			1044	6.30	SK 1SI63	140TC	85
												510	840	1044	6.30	SK 1SI63	180TC	85
				28	44	57	85	129	179					1735	10.36	SK 1SI75	56C	87
									179	265	353			1735	10.36	SK 1SI75	140TC	87
												516	850	1735	10.36	SK 1SI75	180TC	87
233	7.5	7.5	-	37	60	77	113	172						239	1.06	SK 1SI31	48C	79
				37	60	77	113	172	236					239	1.06	SK 1SI31	56C	79
				38	61	79	116	176	245					389	1.69	SK 1SI40	56C	81
										364				389	1.69	SK 1SI40	140TC	81
				39	43	82	120	183	254					690	2.90	SK 1SI50	56C	83
										376	501			690	2.90	SK 1SI50	140TC	83
				40	65	83	123	187	259					1230	5.05	SK 1SI63	56C	85
										385	512			1230	5.05	SK 1SI63	140TC	85
												740	1219	1230	5.05	SK 1SI63	180TC	85
				41	65	84	124	189	262					2071	8.41	SK 1SI75	56C	87
										389	518			2071	8.41	SK 1SI75	140TC	87
												758	1247	2071	8.41	SK 1SI75	180TC	87
175	10	10	-	48	76	99	145	221						230	0.80	SK 1SI31	48C	79
				48	76	99	145	221						230	0.80	SK 1SI31	56C	79
				50	79	103	151	230	319					372	1.24	SK 1SI40	56C	81
										473				372	1.24	SK 1SI40	140TC	81
				51	82	106	156	238	330					664	2.14	SK 1SI50	56C	83
										490	652			664	2.14	SK 1SI50	140TC	83
				53	84	109	160	244	338					1186	3.74	SK 1SI63	56C	85
										502	668			1186	3.74	SK 1SI63	140TC	85
												965		1186	3.74	SK 1SI63	180TC	85
				53	84	111	164	249	346					2009	6.20	SK 1SI75	56C	87
										513	683			2009	6.20	SK 1SI75	140TC	87
												999	1645	2009	6.20	SK 1SI75	180TC	87

63S/4 | 63L/4 | 71S/4 | 71L/4 | 80S/4 | 80L/4 80LH/4 80LP/4 | 90SP/4 90SH/4 | 90LP/4 90LH/4 | 100LP/4 100LH/4 | 112MP/4 112MH/4

NORD Motors - Model type in blue is an energy efficient motor

NORD Motors - Model type in light blue is a premium efficient motor

	Service Factor < 1.0
Class I	Service Factor 1.0-1.39
Class II	Service Factor 1.4-1.99
Class III	Service Factor 2.0 min.

Actual speeds and torques will vary based on the motor performance data.

Send Quote Requests to info@automatedpt.com
Call +1(800)985-6929 To Order or Order Online At Nordgearmotors.com

NORD DRIVESYSTEMS

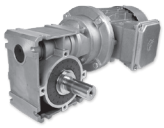

FLEXBLOC™ Single Worm Selection

RATINGS

Output Speed n_2 [rpm]	Total Ratio i	Worm Ratio i_{worm}	2nd Ratio i_{2nd}	Motor Power ~ Based on 1750 rpm: 0.16 hp Output Torque (T_2) [lb-in]	0.25 hp [lb-in]	0.33 hp [lb-in]	0.50 hp [lb-in]	0.75 hp [lb-in]	1.0 hp [lb-in]	1.5 hp [lb-in]	2.0 hp [lb-in]	3.0 hp [lb-in]	5.0 hp [lb-in]	Gear Max Torque T_{2max} [lb-in]	Max Input Power P_{1max} [hp]	Gear Unit	NEMA Adapter	Config. Page
140	12.5	12.5	-	60	96	124	182							212	0.61	SK 1SI31	48C	79
				60	96	124	182							212	0.61	SK 1SI31	56C	79
				60	96	124	182	277	384					363	1.00	SK 1SI40	56C	81
				60	96	124	182	277	384					637	1.00	SK 1SI50	56C	83
										570	759			637	1.69	SK 1SI50	140TC	83
				60	96	124	182	277	384					1142	1.69	SK 1SI63	56C	85
										570	759			1142	2.91	SK 1SI63	140TC	85
				66	104									1142	2.91	SK 1SI63	180TC	85
						124	182	277	384					1912	4.77	SK 1SI75	56C	87
										570	759			1912	4.77	SK 1SI75	140TC	87
												1110	1828	1912	4.77	SK 1SI75	180TC	87
117	15	15	-	64	103	133	196							257	0.66	SK 1SI31	48C	79
				64	103	133	196							257	0.66	SK 1SI31	56C	79
				68	109	141	207	316	438					434	1.06	SK 1SI40	56C	81
				72	115	148	218	332	461					770	1.79	SK 1SI50	56C	83
										684	910			770	1.79	SK 1SI50	140TC	83
				74	119	154	226	345	478					1372	3.07	SK 1SI63	56C	85
										710	944			1372	3.07	SK 1SI63	140TC	85
												1380		1372	3.07	SK 1SI63	180TC	85
				76	120	158	232	353	490					2336	5.10	SK 1SI75	56C	87
										727	967			2336	5.10	SK 1SI75	140TC	87
												1416	2329	2336	5.10	SK 1SI75	180TC	87
88	20	20	-	81	130	168	247							239	0.49	SK 1SI31	48C	79
				81	130	168	247							239	0.49	SK 1SI31	56C	79
				86	138	178	262	399						398	0.77	SK 1SI40	56C	81
				92	147	190	280	426	592					717	1.30	SK 1SI50	56C	83
										878				717	1.30	SK 1SI50	140TC	83
				95	153	198	291	443	615					1274	2.22	SK 1SI63	56C	85
										912	1214			1274	2.22	SK 1SI63	140TC	85
				99	156	205	302	459	638					2168	3.65	SK 1SI75	56C	85
										947	1259			2168	3.65	SK 1SI75	140TC	87
												1843		2168	3.65	SK 1SI75	180TC	87

63S/4	63L/4	71S/4	71L/4	80S/4	80L/4 80LH/4 80LP/4	90SP/4	90SH/4 90LP/4	90LH/4	100LP/4	100LH/4 112MP/4	112MH/4

NORD Motors - Model type in blue is an energy efficient motor

NORD Motors - Model type in light blue is a premium efficient motor

	Service Factor < 1.0
Class I	Service Factor 1.0-1.39
Class II	Service Factor 1.4-1.99
Class III	Service Factor 2.0 min.

Actual speeds and torques will vary based on the motor performance data.

Send Quote Requests to info@automatedpt.com
Call +1(800)985-6929 To Order or Order Online At Nordgearmotors.com

FLEXBLOC™
Single Worm Selection

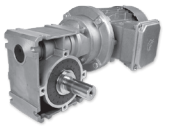

NORD DRIVESYSTEMS

RATINGS

Output Speed n_2 [rpm]	Total Ratio i	Worm Ratio i_{worm}	2nd Ratio i_{2nd}	Motor Power ~ Based on 1750 rpm: 0.16 hp	0.25 hp	0.33 hp	0.50 hp	0.75 hp	1.0 hp	1.5 hp	2.0 hp	3.0 hp	5.0 hp	Gear Max Torque T_{2max} [lb-in]	Max Input Power P_{1max} [hp]	Gear Unit	NEMA Adapter	Config. Page
				Output Torque (T_2) [lb-in]	[lb-in]	[lb-in]	[lb-in]	[lb-in]	[lb-in]	[lb-in]	[lb-in]	[lb-in]	[lb-in]					
70	25	25	-	97	155	201	308							221	0.38	SK 1SI31	48C	79
				97	155	201	308							221	0.38	SK 1SI31	56C	79
				103	165	213	314	477						372	0.60	SK 1SI40	56C	81
				110	177	229	336	512	711					673	1.01	SK 1SI50	56C	83
				115	184	238	350	533	740					1195	1.72	SK 1SI63	56C	85
										1098	1460			1195	1.72	SK 1SI63	140TC	85
				120	190	250	368	560	778					2036	2.79	SK 1SI75	56C	87
										1155	1536			2036	2.79	SK 1SI75	140TC	87
												2249		2036	2.79	SK 1SI75	180TC	87
58	30	30	-	100	161	208								266	0.44	SK 1SI31	48C	79
				100	161	208								266	0.44	SK 1SI31	56C	79
				109	175	226	333	507						442	0.67	SK 1SI40	56C	81
				118	189	245	360	548	761					796	1.11	SK 1SI50	56C	83
				125	201	259	382	581	807					1416	1.86	SK 1SI63	56C	85
										1198	1593			1416	1.86	SK 1SI63	140TC	85
				139	220	259	382	581	807					1929	2.25	SK 1SI75	56C	87
										1198	1593			1929	2.25	SK 1SI75	140TC	87
												2329		1929	2.25	SK 1SI75	180TC	87
44	40	40	-	122	195	252								248	0.34	SK 1SI31	48C	79
				122	195	252								248	0.34	SK 1SI31	56C	79
				134	214	277	407							407	0.51	SK 1SI40	56C	81
				148	237	306	451	686	953					735	0.83	SK 1SI50	56C	83
				158	252	326	480	731	1014					1301	1.38	SK 1SI63	56C	85
										1505				1301	1.38	SK 1SI63	140TC	85
				166	262	346	509	775	1076					2212	2.21	SK 1SI75	56C	87
										1597	2124			2212	2.21	SK 1SI75	140TC	87
35	50	50	-	140	225	286								230	0.27	SK 1SI31	48C	79
				140	225	286								230	0.27	SK 1SI31	56C	79
				155	249	321	473							381	0.41	SK 1SI40	56C	81
				173	277	358	527	803						681	0.65	SK 1SI50	56C	83
				185	296	383	564	858	1191					1212	1.09	SK 1SI63	56C	85
				199	314	414	609	927	1287					2062	1.71	SK 1SI75	56C	87
										1910	2541			2062	1.71	SK 1SI75	140TC	87

63S/4	63L/4	71S/4	71L/4	80S/4	80LH/4 80LP/4	80LL/4	90SP/4	90SH/4	90LP/4	90LH/4	100LP/4	100LH/4	112MP/4	112MH/4

NORD Motors - Model type in blue is an energy efficient motor

NORD Motors - Model type in light blue is a premium efficient motor

	Service Factor < 1.0
Class I	Service Factor 1.0-1.39
Class II	Service Factor 1.4-1.99
Class III	Service Factor 2.0 min.

Actual speeds and torques will vary based on the motor performance data.

Send Quote Requests to info@automatedpt.com
Call +1(800)985-6929 To Order or Order Online At Nordgearmotors.com

NORD DRIVESYSTEMS

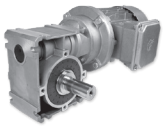

FLEXBLOC™ Single Worm Selection

RATINGS

Output Speed n_2 [rpm]	Total Ratio i	Worm Ratio i_{worm}	2nd Ratio i_{2nd}	Motor Power ~ Based on 1750 rpm: 0.16 hp	0.25 hp	0.33 hp	0.50 hp	0.75 hp	1.0 hp	1.5 hp	2.0 hp	3.0 hp	5.0 hp	Gear Max Torque T_{2max} [lb-in]	Max Input Power P_{1max} [hp]	Gear Unit	NEMA Adapter	Config. Page
				Output Torque (T_2) [lb-in]	[lb-in]	[lb-in]	[lb-in]	[lb-in]	[lb-in]	[lb-in]	[lb-in]	[lb-in]	[lb-in]					
29	60	60	-	154	242									212	0.23	SK 1SI31	48C	79
				154	242									212	0.23	SK 1SI31	56C	79
				172	275	356								354	0.34	SK 1SI40	56C	81
				193	310	400	589							646	0.55	SK 1SI50	56C	83
				211	338	437	644	980	1360					1150	0.90	SK 1SI63	56C	85
				228	360	474	698	1063	1475					1956	1.41	SK 1SI75	56C	87
										2190				1956	1.41	SK 1SI75	140TC	87
22	80	80	-	177										195	0.18	SK 1SI31	48C	79
				177										195	0.18	SK 1SI31	56C	79
				200	321	415								327	0.27	SK 1SI40	56C	81
				229	367	474	698							593	0.43	SK 1SI50	56C	83
				253	405	524	771	1174						1044	0.69	SK 1SI63	56C	85
				275	435	583	858	1306	1813					1779	1.05	SK 1SI75	56C	87
18	100	100	-	196										186	0.17	SK 1SI31	48C	79
				196										186	0.17	SK 1SI31	56C	79
				221	354									301	0.23	SK 1SI40	56C	81
				257	411	531								549	0.36	SK 1SI50	56C	83
				292	468	605	891							974	0.57	SK 1SI63	56C	85
				320	506	667	982	1495	2075					1655	0.88	SK 1SI75	56C	87

63S/4	63L/4	71S/4	71L/4	80S/4	80L/4 80LH/4 80LP/4	90SP/4	90SH/4	90LP/4	90LH/4	100LP/4	100LH/4	112NP/4	112MH/4

NORD Motors - Model type in blue is an energy efficient motor
NORD Motors - Model type in light blue is a premium efficient motor

	Service Factor < 1.0
Class I	Service Factor 1.0-1.39
Class II	Service Factor 1.4-1.99
Class III	Service Factor 2.0 min.

Actual speeds and torques will vary based on the motor performance data.

Send Quote Requests to info@automatedpt.com
Call +1(800)985-6929 To Order or Order Online At Nordgearmotors.com

FLEXBLOC™ 2-Stage Helical Worm Selection

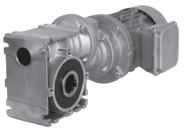

NORD DRIVESYSTEMS

RATINGS

Output Speed n_2 [rpm]	Total Ratio i	Worm Ratio i_{worm}	2nd Ratio i_{2nd}	Motor Power ~ Based on 1750 rpm: 0.16 hp	0.25 hp	0.33 hp	0.50 hp	0.75 hp	1.0 hp	1.5 hp	2.0 hp	3.0 hp	5.0 hp	Gear Max Torque T_{2max} [lb-in]	Max Input Power P_{1max} [hp]	Gear Unit	NEMA Adapter	Config. Page
				Output Torque (T_2) [lb-in]	[lb-in]	[lb-in]	[lb-in]	[lb-in]	[lb-in]	[lb-in]	[lb-in]	[lb-in]	[lb-in]					
35	50	5	10	242	387	500								549	0.38	SK 1SI40/H10	56C	81
				248	397	513	755							742	0.50	SK 1SI50/H10	56C	83
				251	401	519	764							751	0.50	SK 1SI63/H10	56C	85
23	75	7.5	10	340	545	704								637	0.31	SK 1SI40/H10	56C	81
				349	559	723	1064							1061	0.50	SK 1SI50/H10	56C	83
				353	566	732	1077							1074	0.50	SK 1SI63/H10	56C	85
18	100	10	10	436	698									611	0.24	SK 1SI40/H10	56C	81
				447	717	927	1364							1080	0.41	SK 1SI50/H10	56C	83
				453	726	939	1382							1320	0.50	SK 1SI63/H10	56C	85
14	125	12.5	10	544	918									584	0.19	SK 1SI40/H10	56C	81
				544	872	1128								1044	0.32	SK 1SI50/H10	56C	83
				544	872	1128	1659							1631	0.50	SK 1SI63/H10	56C	85
12	150	15	10	573										699	0.21	SK 1SI40/H10	56C	81
				591	946	1223								1257	0.36	SK 1SI50/H10	56C	83
				609	975	1260	1854							1772	0.50	SK 1SI63/H10	56C	85
8.8	200	20	10	704										646	0.15	SK 1SI40/H10	56C	81
				728	1166	1507								1168	0.27	SK 1SI50/H10	56C	83
				752	1204	1557	2291							2071	0.46	SK 1SI63/H10	56C	85
7	250	25	10	763										611	0.12	SK 1SI40/H10	56C	81
				865	1386									1097	0.21	SK 1SI50/H10	56C	83
				880	1410	1823	2782							1947	0.37	SK 1SI63/H10	56C	85
5.8	300	30	10	823										717	0.14	SK 1SI40/H10	56C	81
				877	1405									1292	0.24	SK 1SI50/H10	56C	83
				913	1462	1891								2301	0.42	SK 1SI63/H10	56C	85
4.4	400	40	10	830										664	0.11	SK 1SI40/H10	56C	81
				1050										1186	0.19	SK 1SI50/H10	56C	83
				1098	1759	2274								2115	0.32	SK 1SI63/H10	56C	85
3.5	500	50	10	774										620	0.09	SK 1SI40/H10	56C	81
				1193										1106	0.15	SK 1SI50/H10	56C	83
				1223	1959	2533								1974	0.27	SK 1SI63/H10	56C	85

63S/4	63L/4	71S/4	71L/4	80S/4	80L/4 80LH/4 80LP/4	90S/4 90SP/4	90SH/4 90LP/4	90LH/4 100LP/4	100LH/4 112MP/4	112MH/4

NORD Motors - Model type in blue is an energy efficient motor
NORD Motors - Model type in light blue is a premium efficient motor

	Service Factor < 1.0
Class I	Service Factor 1.0-1.39
Class II	Service Factor 1.4-1.99
Class III	Service Factor 2.0 min.

Actual speeds and torques will vary based on the motor performance data.

Send Quote Requests to info@automatedpt.com
Call +1(800)985-6929 To Order or Order Online At Nordgearmotors.com

DRIVESYSTEMS

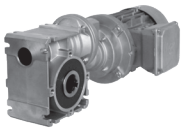

FLEXBLOC™ 2-Stage Helical Worm Selection

RATINGS

Output Speed n_2 [rpm]	Total Ratio i	Worm Ratio i_{worm}	2nd Ratio i_{2nd}	Motor Power ~ Based on 1750 rpm: 0.16 hp	0.25 hp	0.33 hp	0.50 hp	0.75 hp	1.0 hp	1.5 hp	2.0 hp	3.0 hp	5.0 hp	Gear Max Torque T_{2max} [lb-in]	Max Input Power P_{1max} [hp]	Gear Unit	NEMA Adapter	Config. Page
				Output Torque (T_2) [lb-in]	[lb-in]	[lb-in]	[lb-in]	[lb-in]	[lb-in]	[lb-in]	[lb-in]	[lb-in]	[lb-in]					
2.9	600	60	10	730										584	0.08	SK 1SI40/H10	56C	81
				1305										1044	0.13	SK 1SI50/H10	56C	83
				1360	2179									1858	0.23	SK 1SI63/H10	56C	85
2.2	800	80	10	664										531	0.07	SK 1SI40/H10	56C	81
				1195										956	0.11	SK 1SI50/H10	56C	83
				1527										1699	0.19	SK 1SI63/H10	56C	85
1.8	1000	100	10	608										487	0.06	SK 1SI40/H10	56C	81
				1117										894	0.09	SK 1SI50/H10	56C	83
				1670										1584	0.16	SK 1SI63/H10	56C	85

63S/4	63L/4	71S/4	71L/4	80S/4	80L/4 80LH/4 80LP/4	90SP/4 90SH/4	90LP/4 90LH/4	100LP/4 100LH/4	112MP/4 112MH/4

NORD Motors - Model type in blue is an energy efficient motor

NORD Motors - Model type in light blue is a premium efficient motor

	Service Factor < 1.0
Class I	Service Factor 1.0-1.39
Class II	Service Factor 1.4-1.99
Class III	Service Factor 2.0 min.

Actual speeds and torques will vary based on the motor performance data.

Send Quote Requests to info@automatedpt.com
Call +1(800)985-6929 To Order or Order Online At Nordgearmotors.com

FLEXBLOC™
Double Worm Selection

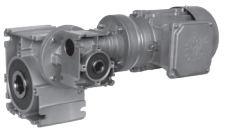

NORD DRIVESYSTEMS

RATINGS

Output Speed n_2 [rpm]	Total Ratio i	Worm Ratio i_{worm}	2nd Ratio i_{2nd}	Motor Power ~ Based on 1750 rpm: 0.16 hp	0.25 hp	0.33 hp	0.50 hp	0.75 hp	1.0 hp	1.5 hp	2.0 hp	3.0 hp	5.0 hp	Gear Max Torque T_{2max} [lb-in]	Max Input Power P_{1max} [hp]	Gear Unit	NEMA Adapter	Config. Page
				Output Torque (T_2) [lb-in]	[lb-in]	[lb-in]	[lb-in]	[lb-in]	[lb-in]	[lb-in]	[lb-in]	[lb-in]	[lb-in]					
12	150	5	30	376	602	778								655	0.30	SK 1SI40/31	56C	81
				412	660	853	1254							1177	0.49	SK 1SI50/31	56C	83
				430	688	890	1309							2097	0.83	SK 1SI63/31	56C	85
				430	688	890	1309	1993	2766					2832	0.96	SK 1SI75/40	56C	87
7.8	225	7.5	30	524	839									699	0.22	SK 1SI40/31	56C	81
				550	882	1140								1248	0.38	SK 1SI50/31	56C	83
				577	925	1195	1759							2221	0.64	SK 1SI63/31	56C	85
				591	946	1223	1800	2740	3803					3009	0.73	SK 1SI75/40	56C	87
5.8	300	10	30	662										717	0.18	SK 1SI40/31	56C	81
				698	1118	1446								1292	0.30	SK 1SI50/31	56C	83
				734	1176	1520	2236							2301	0.52	SK 1SI63/31	56C	85
				752	1204	1557	2291	3487						3106	0.60	SK 1SI75/40	56C	87
4.7	375	12.5	30	716										735	0.16	SK 1SI40/31	56C	81
				716	1147	1483								1319	0.27	SK 1SI50/31	56C	83
				716	1147	1483	2182							2345	0.46	SK 1SI63/31	56C	85
				716	1147	1483	2182	3321						3168	0.53	SK 1SI75/40	56C	87
3.9	450	15	30	859										743	0.14	SK 1SI40/31	56C	81
				913	1462									1345	0.24	SK 1SI50/31	56C	83
				940	1505	1946	2864							2390	0.42	SK 1SI63/31	56C	85
				966	1548	2002	2945							3221	0.47	SK 1SI75/40	56C	87
2.9	600	20	30	962										770	0.12	SK 1SI40/31	56C	81
				1110	1778									1381	0.20	SK 1SI50/31	56C	83
				1145	1835	2372								2460	0.35	SK 1SI63/31	56C	85
				1181	1893	2447	3600							3319	0.39	SK 1SI75/40	56C	87
2.3	750	25	30	974										779	0.10	SK 1SI40/31	56C	81
				1298										1407	0.18	SK 1SI50/31	56C	83
				1342	2151	2780								2505	0.30	SK 1SI63/31	56C	85
				1387	2222	2873	4227							3381	0.34	SK 1SI75/40	56C	87
1.9	900	30	30	996										796	0.10	SK 1SI40/31	56C	81
				1342										1434	0.17	SK 1SI50/31	56C	83
				1396	2237	2891								2549	0.30	SK 1SI63/31	56C	85
				1450	2323	3003	4418							3434	0.32	SK 1SI75/40	56C	87

63S/4 | 63L/4 | 71S/4 | 71L/4 | 80S/4 | 80L/4 80LH/4 80LP/4 | 90S/4 90SP/4 | 90SH/4 90LP/4 | 90LH/4 100LP/4 | 100LH/4 112NP/4 | 112NMH/4

NORD Motors - Model type in blue is an energy efficient motor
NORD Motors - Model type in light blue is a premium efficient motor

	Service Factor < 1.0
Class I	Service Factor 1.0-1.39
Class II	Service Factor 1.4-1.99
Class III	Service Factor 2.0 min.

Actual speeds and torques will vary based on the motor performance data.

Send Quote Requests to info@automatedpt.com
Call +1(800)985-6929 To Order or Order Online At Nordgearmotors.com

NORD DRIVESYSTEMS

FLEXBLOC™ Double Worm Selection

RATINGS

Output Speed n_2 [rpm]	Total Ratio i	Worm Ratio i_{worm}	2nd Ratio i_{2nd}	Motor Power ~ Based on 1750 rpm: 0.16 hp	0.25 hp	0.33 hp	0.50 hp	0.75 hp	1.0 hp	1.5 hp	2.0 hp	3.0 hp	5.0 hp	Gear Max Torque T_{2max} [lb-in]	Max Input Power P_{1max} [hp]	Gear Unit	NEMA Adapter	Config. Page
				Output Torque (T_2) [lb-in]	[lb-in]	[lb-in]	[lb-in]	[lb-in]	[lb-in]	[lb-in]	[lb-in]	[lb-in]	[lb-in]					
1.5	1200	40	30	1029										823	0.09	SK 1SI40/31	56C	81
				1647										1487	0.15	SK 1SI50/31	56C	83
				1647	2638	3410								2637	0.27	SK 1SI63/31	56C	85
				1718	2753	3559								3558	0.30	SK 1SI75/40	56C	87
1.2	1500	50	30	1051										841	0.08	SK 1SI40/31	56C	81
				1892										1513	0.14	SK 1SI50/31	56C	83
				1790	2868									2690	0.26	SK 1SI63/31	56C	85
				1969	3154	4078								3637	0.27	SK 1SI75/40	56C	87
0.97	1800	60	30	1062										850	0.07	SK 1SI40/31	56C	81
				1914										1531	0.12	SK 1SI50/31	56C	83
				2040	3269									2726	0.22	SK 1SI63/31	56C	85
				2148	3441	4448								3682	0.24	SK 1SI75/40	56C	87
0.73	2400	80	30	1084										867	0.07	SK 1SI40/31	56C	81
				1947										1558	0.11	SK 1SI50/31	56C	83
				2291	3670									2770	0.20	SK 1SI63/31	56C	85
				2434	3900	4819								3744	0.21	SK 1SI75/40	56C	87
0.58	3000	100	30	1095										876	0.06	SK 1SI40/31	56C	81
				1969										1575	0.11	SK 1SI50/31	56C	83
				2506										2797	0.20	SK 1SI63/31	56C	85
				2327	3728									3779	0.19	SK 1SI75/40	56C	87

63S/4	63L/4	71S/4	71L/4	80S/4	80L/4 80LH/4 80LP/4	90SP/4 90SH/4	90LP/4 90LH/4	100LP/4 100LH/4	112MP/4 112MH/4

NORD Motors - Model type in blue is an energy efficient motor
NORD Motors - Model type in light blue is a premium efficient motor

	Service Factor < 1.0
Class I	Service Factor 1.0-1.39
Class II	Service Factor 1.4-1.99
Class III	Service Factor 2.0 min.

Actual speeds and torques will vary based on the motor performance data.

Send Quote Requests to info@automatedpt.com
Call +1(800)985-6929 To Order or Order Online At Nordgearmotors.com

Send Quote Requests to info@automatedpt.com
Call +1(800)985-6929 To Order or Order Online At Nordgearmotors.com

Notes

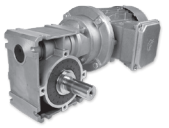

Send Quote Requests to info@automatedpt.com
Call +1(800)985-6929 To Order or Order Online At Nordgearmotors.com

FLEXBLOC™ Component Selection and Ordering

Selection

- SK 1SI31
- SK 1SI40
- SK 1SI50
- SK 1SI63
- SK 1SI75
- Flexbloc Component Kit Overview
- Motor Part Numbers
- Brakemotor Part Numbers

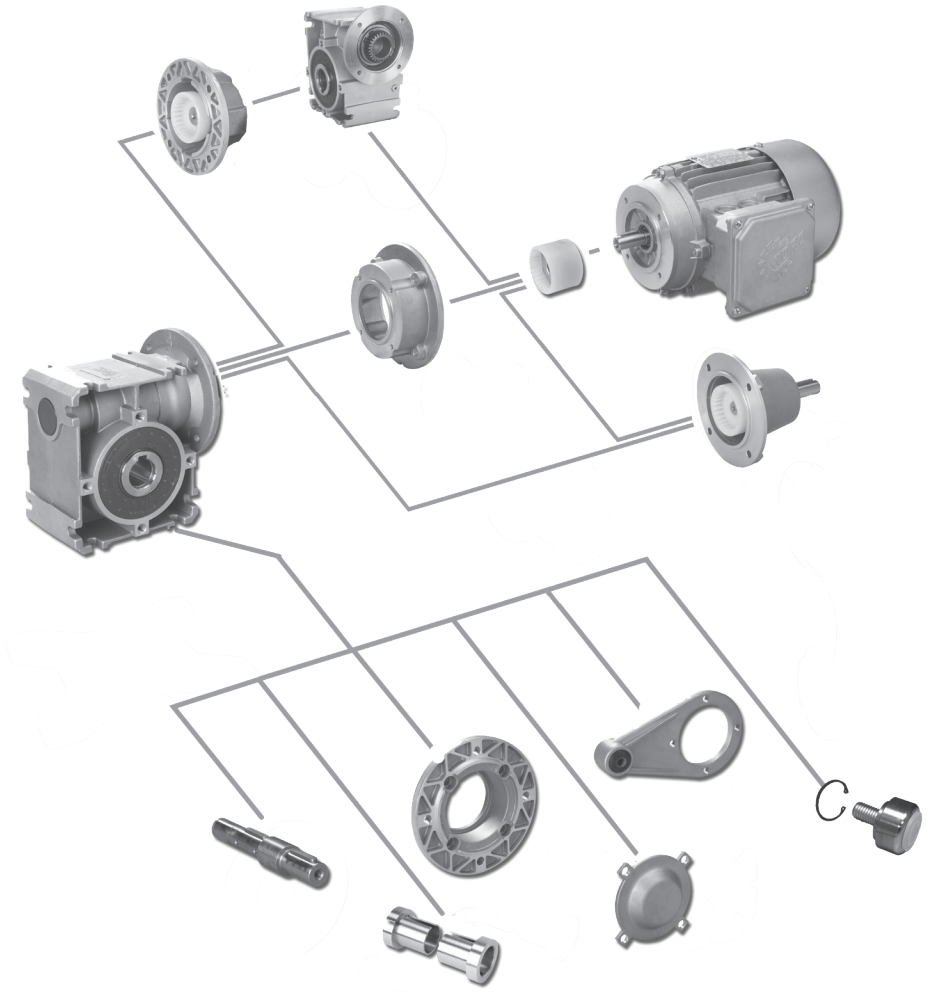

NORD® DRIVESYSTEMS

www.nord.com

UNICASE™

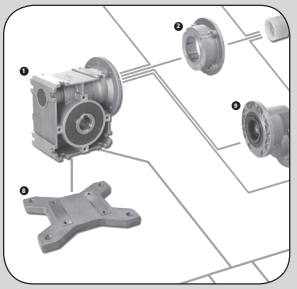

1 Gearbox	1.000 hollow shaft
i=5	60492050
i=7.5	60492080
i=10	60492100
i=12.5	60492130
i=15	60492150
i=20	60492200
i=25	60492250
i=30	60492300
i=40	60492400
i=50	60492500
i=60	60492600
i=80	60492800
i=100	60492000

Inch Flexbloc Component Kits		
	SK 1SI31, Ø 0.625	SK 1SI40,
Worm Modules	60392050, i=5	6049205
	60392080, i=7.5	6049208
	60392100, i=10	6049210
	60392130, i=12.5	6049213
	60392150, i=15	6049215
	60392200, i=20	6049220
	60392250, i=25	6049225
	60392300, i=30	6049230
	60392400, i=40	6049240
	60392500, i=50	6049250
	60392600, i=60	6049260
	60392800, i=80	6049280
	60392000, i=100	6049200
NEMA 48C	60395500	N/A
NEMA 56C	60395510	6049
NEMA 140TC	N/A	605

Send Quote Requests to info@automatedpt.com
Call +1(800)985-6929 To Order or Order Online At Nordgearmotors.com

FLEXBLOC™ SK 1SI31
Part Numbers

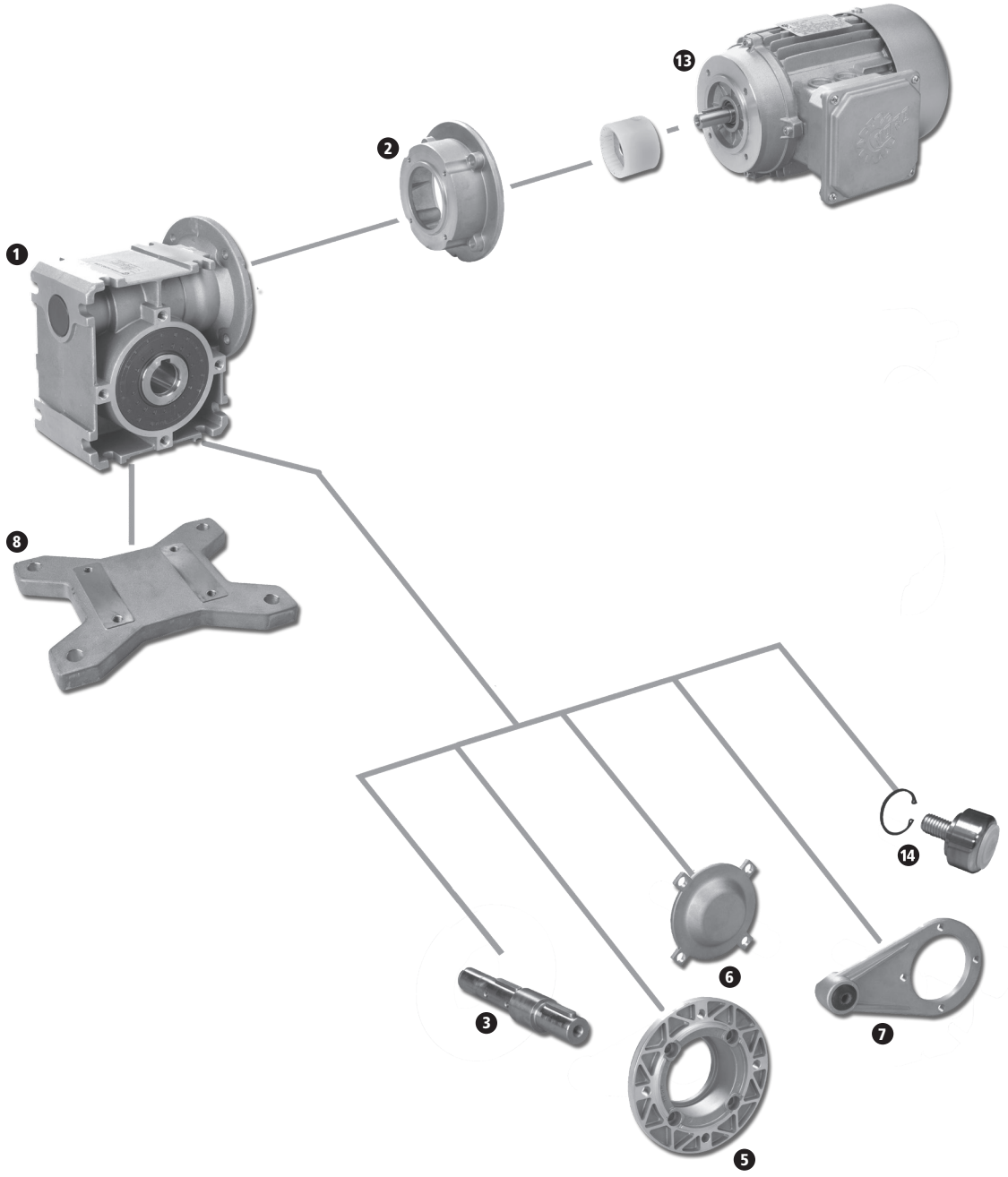

Send Quote Requests to info@automatedpt.com
Call +1(800)985-6929 To Order or Order Online At Nordgearmotors.com

Send Quote Requests to info@automatedpt.com
Call +1(800)985-6929 To Order or Order Online At Nordgearmotors.com

FLEXBLOC™ SK 1SI31 Part Numbers

❶ Wormgearbox	0.625 Hollow Shaft	14 mm Hollow Shaft
i=5	60392050	60391050
i=7.5	60392080	60391080
i=10	60392100	60391100
i=12.5	60392130	60391130
i=15	60392150	60391150
i=20	60392200	60391200
i=25	60392250	60391250
i=30	60392300	60391300
i=40	60392400	60391400
i=50	60392500	60391500
i=60	60392600	60391600
i=80	60392800	60391800
i=100	60392000	60391000

❷ NEMA and IEC Adapter 📖 94 & 118	Part Number
NEMA 48C	60395500
NEMA 56C	60395510
IEC 56 B14 C105	60395100
IEC 56 B5 A120	60395200
IEC 63 B14 C90	60395010
IEC 63 B14 C120	60395110
IEC 63 B5 A140	60395210
IEC 71 B14 C105	60395020
IEC 71 B14 C140	60395120

❸ Plug in Shaft - Inch 📖 122		Part Number
Shaft	0.625″ x 30mm	60393010
Double Shaft	0.625″ x 30mm	60393110
Shaft for Output Flange B5	0.625″ x 30mm	60393210
Plug in Shaft - Metric 📖 122		**Part Number**
Shaft	14mm x 30mm	60393000
Double Shaft	14mm x 30mm	60393100
Shaft for Output Flange B5	14mm x 30mm	60393200

❺ Output Flange B5 📖 95	Part Number
I Flange - 105mm	60393800
II Flange - 80mm, Square Flange, Female Pilot	60393810
III Flange - 80mm, Square Flange, Male Pilot	60393820

❻ Shaft Cover 📖 95	Part Number
Shaft Cover	60393950

❼ Torque Arm 📖 95	Part Number
Torque Arm	60393900

❽ Foot Plate 📖 95	Foot Hole Dimensions	Part Number
Foot Plate	0.68″ / 3.31″ x 4.38″	60394600

Open Vent (Not shown in image)	Part Number
Open Vent	60693500
AUTOVENT™	22008056

⓮ Fixing Kit	Part Number
Fixing Kit (Inch)	60382910
Fixing Kit (metric)	60382330

⓭ C-face 230/460V-60Hz Standard Efficiency Motor		Part Number
63S/4-56C	230/460V-60Hz, 1/6 hp	31110012
63L/4-56C	230/460V-60Hz, 1/4 hp	31610012
71S/4-56C	230/460V-60Hz, 1/3 hp	32110012
71L/4-56C	230/460V-60Hz, 1/2 hp	32610012
80S/4-56C	230/460V-60Hz, 3/4 hp	33110012
80L/4-56C	230/460V-60Hz, 1 hp	33610022
C-face 575V-60Hz Standard Efficiency Motor		**Part Number**
63S/4-56C	575V-60Hz, 1/6 hp	31110013
63L/4-56C	575V-60Hz, 1/4 hp	31610013
71S/4-56C	575V-60Hz, 1/3 hp	32110013
71L/4-56C	575V-60Hz, 1/2 hp	32610013
80S/4-56C	575V-60Hz, 3/4 hp	33110013
C-face 230/460V-60Hz Energy Efficient Motor		**Part Number**
80LH/4-56C	230/460V-60Hz, 1 hp	33610094
C-face 575V-60Hz Energy Efficient Motor		**Part Number**
80LH/4-56C	575V-60Hz, 1 hp	33610095
C-face 230/460V-60Hz Premium Efficient Motor		**Part Number**
80LP/4-56C	230/460V-60Hz, 1 hp	33610294
C-face 575V-60Hz Premium Efficient Motor		**Part Number**
80LP/4-56C	575V-60Hz, 1 hp	33610295

Send Quote Requests to info@automatedpt.com
Call +1(800)985-6929 To Order or Order Online At Nordgearmotors.com

Send Quote Requests to info@automatedpt.com
Call +1(800)985-6929 To Order or Order Online At Nordgearmotors.com

FLEXBLOC™ SK 1SI40
Part Numbers

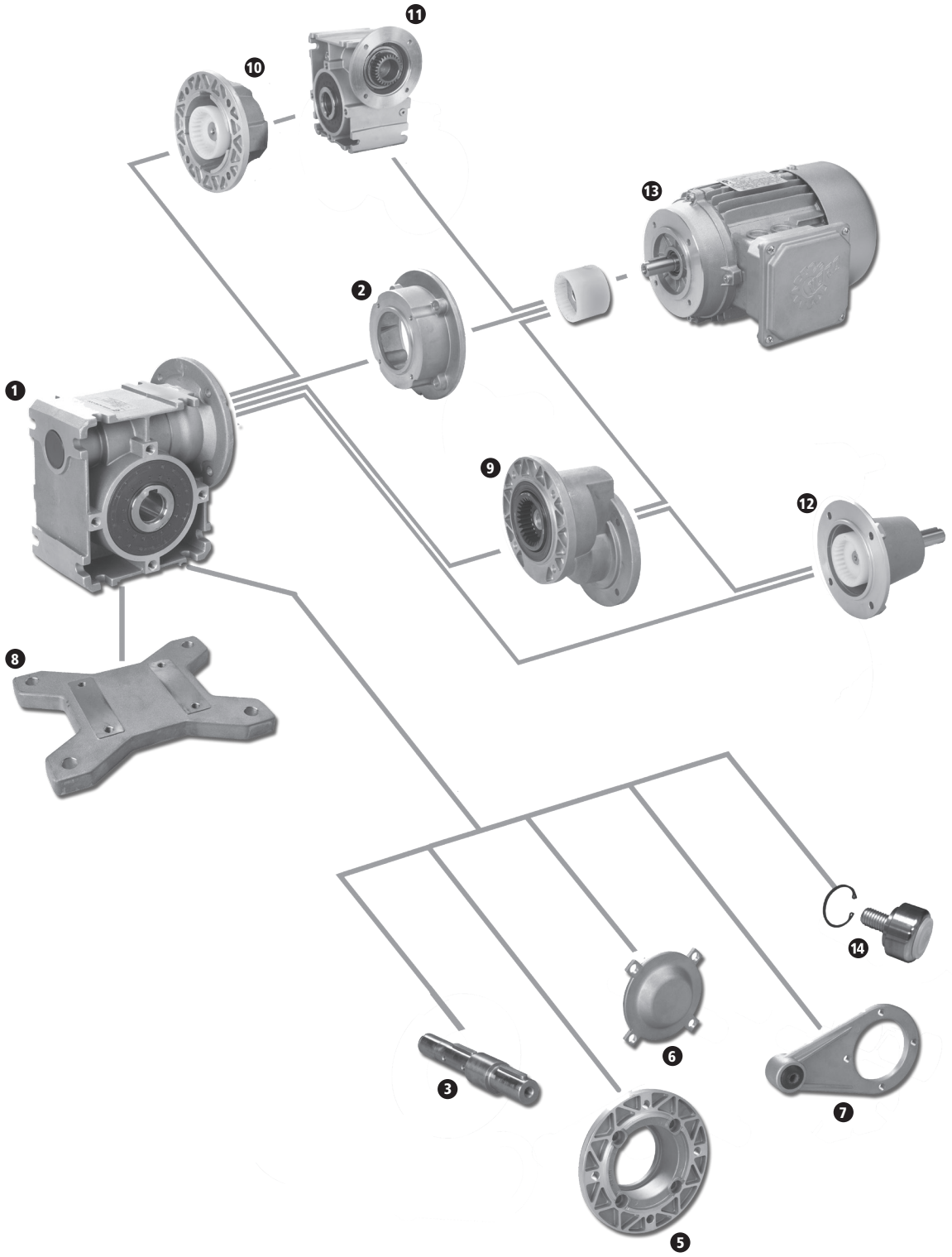

Send Quote Requests to info@automatedpt.com
Call +1(800)985-6929 To Order or Order Online At Nordgearmotors.com

NORD DRIVESYSTEMS

FLEXBLOC™ SK 1SI40 Part Numbers

CONFIGURATION

❶ Gearbox	1.000 hollow shaft	18mm hollow shaft
i=5	60492050	60491050
i=7.5	60492080	60491080
i=10	60492100	60491100
i=12.5	60492130	60491130
i=15	60492150	60491150
i=20	60492200	60491200
i=25	60492250	60491250
i=30	60492300	60491300
i=40	60492400	60491400
i=50	60492500	60491500
i=60	60492600	60491600
i=80	60492800	60491800
i=100	60492000	60491000

❷ NEMA and IEC Adapters 📖 98 & 118	Part Number
NEMA 56C	60495500
NEMA 140TC	60595500
IEC 56 B14 C105	60495100
IEC 56 B5 A120	60495200
IEC 63 B14 C90	60495010
IEC 63 B14 C120	60495110
IEC 63 B5 A140	60495210
IEC 71 B14 C105	60495020
IEC 71 B14 C140	60495120
IEC 71 B5 A160	60495220
IEC 80 B14 C120	60495030
IEC 80 B14 C160	60495130
IEC 80 B5 A200	60495230
IEC 90 B14 C140	60495040
IEC 90 B14 C160	60495140
IEC 90 B5 A200	60495240

❸ Plug in Shaft - Inch 📖 122		Part Number
Shaft	0.750″ x 40mm	60493010
Double Shaft	0.750″ x 40mm	60493110
Shaft for Output Flange B5	0.750″ x 40mm	60493210
Plug in Shaft - Metric 📖 122		**Part Number**
Shaft	18mm x 40mm	60493000
Double Shaft	18mm x 40mm	60493100
Shaft for Output Flange B5	18mm x 40mm	60493200

❺ Output Flange B5 📖 99	Part Number
I Flange - 120mm	60493800
II Flange - 110mm, Sqare Flange, Female Pilot	60493810

❻ Shaft Cover 📖 99	Part Number
Shaft Cover	60493950

❼ Torque Arm 📖 99		Part Number
130mm Torque Arm	I	60493900
100mm Torque Arm	III	60490770

❽ Foot Plate 📖 99	Foot Hole Dimensions	Part Number
Foot Plate	0.53″ / 4.31″x 5.25″	60494600

Open Vent (Not shown in image)	Part Number
Open Vent	60693500
AUTOVENT™	22008056

❾ Helical Input Stage 📖 114	Part Number
Helical Input Stage H10	60494000

❿ Double Worm Adapter 📖 116		Part Number
Inch	0.625″ (requires ⓫)	60494110
Metric	14mm (requires ⓫)	60494100

⓫ Double Worm Unit			Part Number
Inch	SK1SI31	0.625″ bore	Ratio Specific*
Metric	SK1SI31	14mm bore	Ratio Specific*

*For module ratio and Adapter combination see page 79
If ❿ is an inch adapter ⓫ must be selected as an inch bore.

⓬ Solid Input Shaft 📖 119		Part Number
Solid Input Shaft	0.625″ x 1.57″	60494210
Solid Input Shaft	16mm x 40mm	60494200

⓮ Fixing Kit	Part Number
Fixing Kit (Inch)	60282930
Fixing (Metric)	60482340

⓭ C-face 230/460V-60Hz Standard Efficiency Motor		Part Number
63S/4-56C	230/460V-60Hz, 1/6 hp	31110012
63L/4-56C	230/460V-60Hz, 1/4 hp	31610012
71S/4-56C	230/460V-60Hz, 1/3 hp	32110012
71L/4-56C	230/460V-60Hz, 1/2 hp	32610012
80S/4-56C	230/460V-60Hz, 3/4 hp	33110012
80L/4-56C	230/460V-60Hz, 1 hp	33610022
C-face 575V-60Hz Standard Efficiency Motor		**Part Number**
63S/4-56C	575V-60Hz, 1/6 hp	31110013
63L/4-56C	575V-60Hz, 1/4 hp	31610013
71S/4-56C	575V-60Hz, 1/3 hp	32110013
71L/4-56C	575V-60Hz, 1/2 hp	32610013
C-face 230/460V-60Hz Energy Efficient Motor		**Part Number**
80LH/4-56C	230/460V-60Hz, 1 hp	33610094
80LH/4-143TC	230/460V-60Hz, 1 hp	33610092
90SH/4-145TC	230/460V-60Hz, 1-1/2 hp	34110092
90LH/4-145TC	230/460V-60Hz, 2 hp	34610092
C-face 575V-60Hz Energy Efficient Motor		**Part Number**
80LH/4-56C	575V-60Hz, 1 hp	33610095
80LH/4-143TC	575V-60Hz, 1 hp	33610093
90SH/4-145TC	575V-60Hz, 1-1/2 hp	34110093
90LH/4-145TC	575V-60Hz, 2 hp	34610093
C-face 230/460V-60Hz Premium Efficient Motor		**Part Number**
80LP/4-56C	230/460V-60Hz, 1 hp	33610294
80LP/4-143TC	230/460V-60Hz, 1 hp	33610292
90SP/4-145TC	230/460V-60Hz, 1-1/2 hp	34110292
90LP/4-145TC	230/460V-60Hz, 2 hp	34610292
C-face 575V-60Hz Premium Efficient Motor		**Part Number**
80LP/4-56C	575V-60Hz, 1 hp	33610295
80LP/4-143TC	575V-60Hz, 1 hp	33610293
90SP/4-145TC	575V-60Hz, 1-1/2 hp	34110293
90LP/4-145TC	575V-60Hz, 2 hp	34610293

Send Quote Requests to info@automatedpt.com
Call +1(800)985-6929 To Order or Order Online At Nordgearmotors.com

Send Quote Requests to info@automatedpt.com
Call +1(800)985-6929 To Order or Order Online At Nordgearmotors.com

FLEXBLOC™ SK 1SI50
Part Numbers

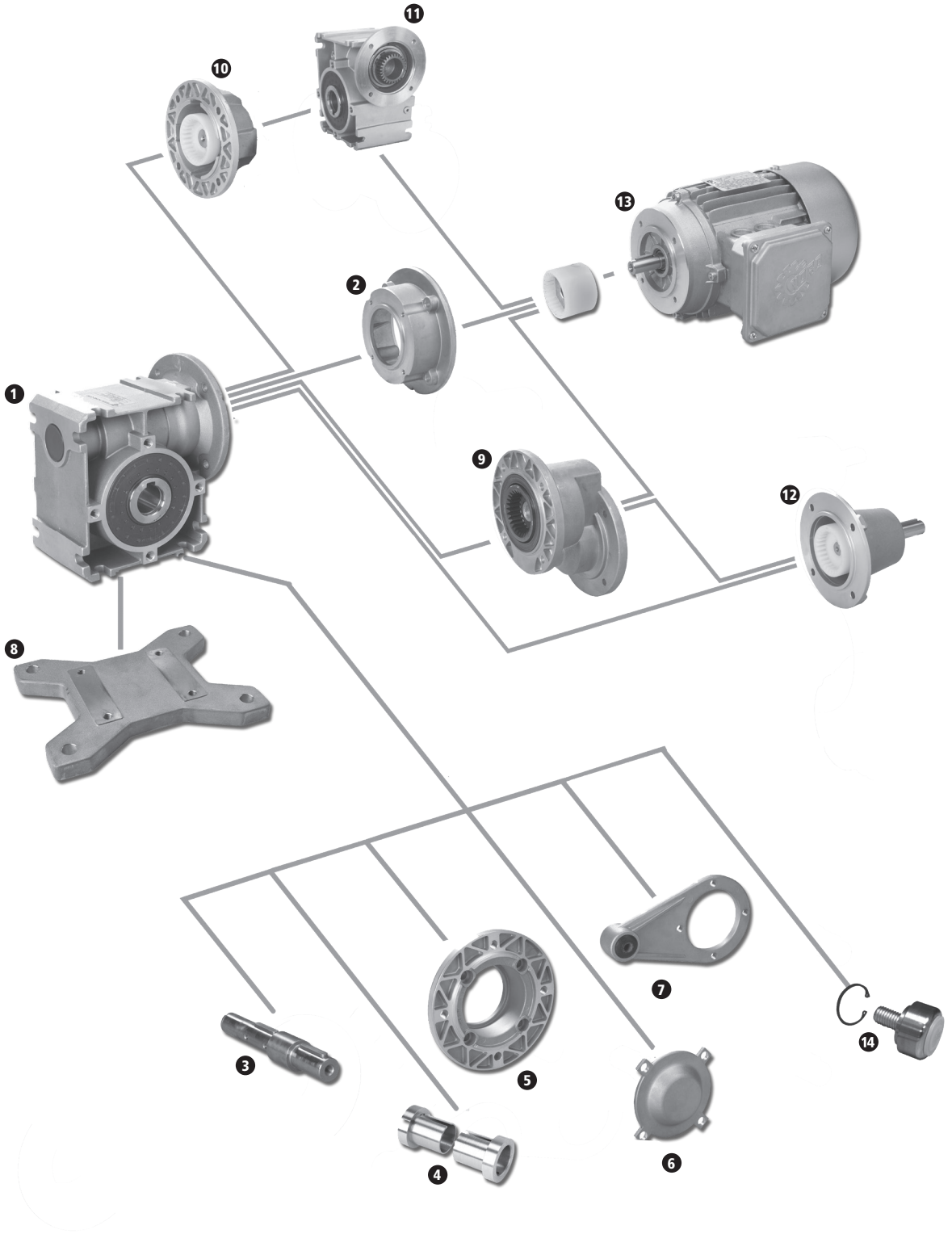

Send Quote Requests to info@automatedpt.com
Call +1(800)985-6929 To Order or Order Online At Nordgearmotors.com

Send Quote Requests to info@automatedpt.com
Call +1(800)985-6929 To Order or Order Online At Nordgearmotors.com

NORD DRIVESYSTEMS

FLEXBLOC™ SK 1SI50 Part Numbers

CONFIGURATION

❶ Wormgearbox	1.125 hollow shaft	25mm hollow shaft
i=5	60592050	60591050
i=7.5	60592080	60591080
i=10	60592100	60591100
i=12.5	60592130	60591130
i=15	60592150	60591150
i=20	60592200	60591200
i=25	60592250	60591250
i=30	60592300	60591300
i=40	60592400	60591400
i=50	60592500	60591500
i=60	60592600	60591600
i=80	60592800	60591800
i=100	60592000	60591000

❷ NEMA and IEC Adapter 📖 102 & 118	Part Number
NEMA 56C	60495500
NEMA 140TC	60595500
IEC 56 B14 C105	60495100
IEC 56 B5 A120	60495200
IEC 63 B14 C90	60495010
IEC 63 B14 C120	60495110
IEC 63 B5 A140	60495210
IEC 71 B14 C105	60495020
IEC 71 B14 C140	60495120
IEC 71 B5 A160	60495220
IEC 80 B14 C120	60495030
IEC 80 B14 C160	60495130
IEC 80 B5 A200	60495230
IEC 90 B14 C140	60495040
IEC 90 B14 C160	60495140
IEC 90 B5 A200	60495240

❸ Plug in Shaft - Inch 📖 122		Part Number
Shaft	1.000″ x 50mm	60593010
Double Shaft	1.000″ x 50mm	60593110
Shaft for Output Flange B5	1.000″ x 50mm	60593210
Plug in Shaft - Metric 📖 122		**Part Number**
Shaft	25mm x 50mm	60593000
Double Shaft	25mm x 50mm	60593100
Shaft for Output Flange B5	25mm x 50mm	60593200

❹ Hollow Shaft Bushing 📖 103		Part Number
Hollow Shaft Bushing	1.00″	60593400

❺ Output Flange B5 📖 103	Part Number
I Flange - 160mm	60593800
II Flange - 125mm, Square Flange, Female Pilot	60593810
III Flange - 125mm, Square Flange, Male Pilot	60593820

❻ Shaft Cover 📖 103	Part Number
Shaft Cover	60593950

❼ Torque Arm 📖 103		Part Number
130 mm Torque Arm	I	60593900
110 mm Torque Arm	II	60593920
100 mm Torque Arm	III	60593910

❽ Foot Plate 📖 103	Foot Hole Dimensions	Part Number
Foot Plate	0.64″ / 4.69″x 6.38″	60594600

Open Vent (Not shown in image)	Part Number
Open Vent	60693500
AUTOVENT™	22008056

❾ Helical Input Stage 📖 114	Part Number
Helical Input Stage H10	60494000

❿ Double Worm Adapter 📖 116		Part Number
Inch	0.625″ (requires ⓫)	60494110
Metric	14mm (requires ⓫)	60494100

⓫ Double Worm Unit			Part Number
Inch	SK1SI31	0.625″ bore	Ratio Specific*
Metric	SK1SI31	14mm bore	Ratio Specific*

*For module ratio and Adapter combination see page 79
If ⓫ is an inch adapter ⓫ must be selected as an inch bore.

⓬ Solid Input Shaft 📖 119		Part Number
Solid Input Shaft	0.625″ x 1.57″	60494210
Solid Input Shaft	16mm x 40mm	60494200

⓮ Fixing Kit	Part Number
Fixing Kit (Inch)	60282930
Fixing (Metric)	60282310

⓭ C-face 230/460V-60Hz Standard Efficiency Motor		Part Number
63S/4-56C	230/460V-60Hz, 1/6 hp	31110012
63L/4-56C	230/460V-60Hz, 1/4 hp	31610012
71S/4-56C	230/460V-60Hz, 1/3 hp	32110012
71L/4-56C	230/460V-60Hz, 1/2 hp	32610012
80S/4-56C	230/460V-60Hz, 3/4 hp	33110012
80L/4-56C	230/460V-60Hz, 1 hp	33610022
C-face 575V-60Hz Standard Efficiency Motor		**Part Number**
63S/4-56C	575V-60Hz, 1/6 hp	31110013
63L/4-56C	575V-60Hz, 1/4 hp	31610013
71S/4-56C	575V-60Hz, 1/3 hp	32110013
71L/4-56C	575V-60Hz, 1/2 hp	32610013
C-face 230/460V-60Hz Energy Efficient Motor		**Part Number**
80LH/4-56C	230/460V-60Hz, 1 hp	33610094
80LH/4-143TC	230/460V-60Hz, 1 hp	33610092
90SH/4-145TC	230/460V-60Hz, 1-1/2 hp	34110092
90LH/4-145TC	230/460V-60Hz, 2 hp	34610092
C-face 575V-60Hz Energy Efficient Motor		**Part Number**
80LH/4-56C	575V-60Hz, 1 hp	33610095
80LH/4-143TC	575V-60Hz, 1 hp	33610093
90SH/4-145TC	575V-60Hz, 1-1/2 hp	34110093
90LH/4-145TC	575V-60Hz, 2 hp	34610093
C-face 230/460V-60Hz Energy Efficient Motor		**Part Number**
80LP/4-56C	230/460V-60Hz, 1 hp	33610294
80LP/4-143TC	230/460V-60Hz, 1 hp	33610292
90SP/4-145TC	230/460V-60Hz, 1-1/2 hp	34110292
90LP/4-145TC	230/460V-60Hz, 2 hp	34610292
C-face 575V-60Hz Energy Efficient Motor		**Part Number**
80LP/4-56C	575V-60Hz, 1 hp	33610295
80LP/4-143TC	575V-60Hz, 1 hp	33610293
90SP/4-145TC	575V-60Hz, 1-1/2 hp	34110293
90LP/4-145TC	575V-60Hz, 2 hp	34610293

Send Quote Requests to info@automatedpt.com
Call +1(800)985-6929 To Order or Order Online At Nordgearmotors.com

Send Quote Requests to info@automatedpt.com
Call +1(800)985-6929 To Order or Order Online At Nordgearmotors.com

FLEXBLOC™ SK 1SI63
Part Numbers

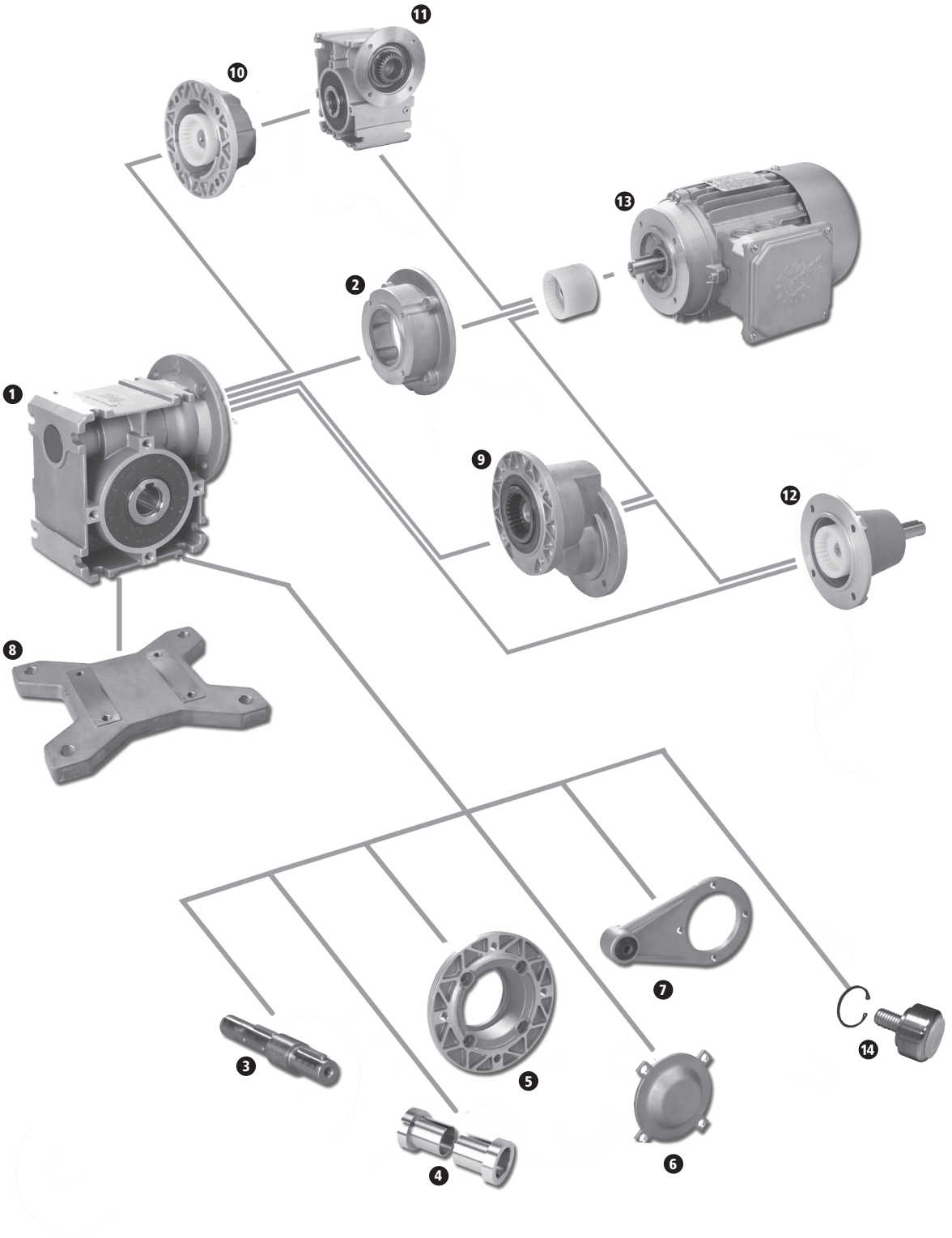

Send Quote Requests to info@automatedpt.com
Call +1(800)985-6929 To Order or Order Online At Nordgearmotors.com

NORD DRIVESYSTEMS

FLEXBLOC™ SK 1SI63 Part Numbers

CONFIGURATION

❶ Wormgearbox	1.4375 Hollow Shaft	25mm Hollow Shaft
i=5	60692050	60691050
i=7.5	60692080	60691080
i=12.5	60692130	60691130
i=10	60692100	60691100
i=15	60692150	60691150
i=20	60692200	60691200
i=25	60692250	60691250
i=30	60692300	60691300
i=40	60692400	60691400
i=50	60692500	60691500
i=60	60692600	60691600
i=80	60692800	60691800
i=100	60692000	60691000

❷ NEMA and IEC Adapter 106 & 118	Part Number
NEMA 56C	60495500
NEMA 140TC	60595500
NEMA 180TC	60695500
IEC 56 B14 C105	60495100
IEC 56 B5 A120	60495200
IEC 63 B14 C90	60495010
IEC 63 B14 C120	60495110
IEC 63 B5 A140	60495210
IEC 71 B14 C105	60495020
IEC 71 B14 C140	60495120
IEC 71 B5 A160	60495220
IEC 80 B14 C120	60495030
IEC 80 B14 C160	60495130
IEC 80 B5 A200	60495230
IEC 90 B14 C140	60695040
IEC 90 B14 C160	60695140
IEC 90 B5 A200	60695240

❸ Plug in Shaft - Inch 122		Part Number
Shaft	1.125″ x 60mm	60693010
Double Shaft	1.125″ x 60mm	60693110
Shaft for Output Flange B5	1.125″ x 60mm	60693210
Plug in Shaft - Metric 122		**Part Number**
Plug-in Shaft	25mm x 50mm	60693000
Double Plug-in Shaft	25mm x 50mm	60693100
Shaft for Output Flange B5	25mm x 50mm	60693200

❹ Hollow Shaft Bushing 107		Part Number
Hollow Shaft Bushing	1.00″	60693400
Hollow Shaft Bushing	1.1875″	60693410
Hollow Shaft Bushing	1.25″	60693420

❺ Output Flange B5 107	Part Number
I Flange - 200mm	60693800
II Flange - 180mm, Square Flange, Female Pilot	60693810
IV Flange, 160mm	60693820

❻ Shaft Cover 107	Part Number
Shaft Cover	60693950

❼ Torque Arm 107	Part Number
Torque Arm	60693900

❽ Foot Plate 109	Foot Hole Dimensions	Part Number
Foot Plate	0.86″ / 5.25″x 8.00″	60694600

Open Vent (Not shown in image)	Part Number
Open Vent	60693500
AUTOVENT™	22008056

❾ Helical Input Stage 114	Part Number
Helical Input Stage H10	60494000

❿ Double Worm Adapter 116		Part Number
Inch	0.625″ (requires ⓫)	60494110
Metric	14mm (requires ⓫)	60494100

⓫ Double Worm Unit			Part Number
Inch	SK1SI31	0.625″ bore	Ratio Specific*
Metric	SK1SI31	14mm bore	Ratio Specific*

*For module ratio and Adapter combination see page 79
If ❿ is an inch adapter ⓫ must be selected as an inch bore.

⓬ Solid Input Shaft 119		Part Number
Solid Input Shaft	0.625″ x 1.57″	60494210
Solid Input Shaft	16mm x 40mm	60494200

⓮ Fixing Kit	Part Number
Fixing Kit (Inch)	82282920
Fixing (Metric)	60282310

⓭ C-face 230/460V-60Hz Standard Efficiency Motor		Part Number
63S/4-56C	230/460V-60Hz, 1/6 hp	31110012
63L/4-56C	230/460V-60Hz, 1/4 hp	31610012
71S/4-56C	230/460V-60Hz, 1/3 hp	32110012
71L/4-56C	230/460V-60Hz, 1/2 hp	32610012
80S/4-56C	230/460V-60Hz, 3/4 hp	33110012
80L/4-56C	230/460V-60Hz, 1 hp	33610022
C-face 575V-60Hz Standard Efficiency Motor		**Part Number**
63S/4-56C	575V-60Hz, 1/6 hp	31110013
63L/4-56C	575V-60Hz, 1/4 hp	31610013
71S/4-56C	575V-60Hz, 1/3 hp	32110013
71L/4-56C	575V-60Hz, 1/2 hp	32610013
80S/4-56C	575V-60Hz, 3/4 hp	33110013
C-face 230/460V-60Hz Energy Efficient Motor		**Part Number**
80LH/4-56C	230/460V-60Hz, 1 hp	33610094
80LH/4-143TC	230/460V-60Hz, 1 hp	33610092
90SH/4-145TC	230/460V-60Hz, 1-1/2 hp	34110092
90LH/4-145TC	230/460V-60Hz, 2 hp	34610092
100LH/4-182TC	230/460V-60Hz, 3 hp	35110092
112MH/4-184TC	230/460V-60Hz, 5 hp	36110092
C-face 575V-60Hz Energy Efficient Motor		**Part Number**
80LH/4-56C	575V-60Hz, 1 hp	33610095
80LH/4-143TC	575V-60Hz, 1 hp	33610093
90SH/4-145TC	575V-60Hz, 1-1/2 hp	34110093
90LH/4-145TC	575V-60Hz, 2 hp	34610093
100LH/4-182TC	575V-60Hz, 3 hp	35110093
112MH/4-184TC	575V-60Hz, 5 hp	36110093
C-face 230/460V-60Hz Energy Efficient Motor		**Part Number**
80LP/4-56C	230/460V-60Hz, 1 hp	33610294
80LP/4-143TC	230/460V-60Hz, 1 hp	33610292
90SP/4-145TC	230/460V-60Hz, 1-1/2 hp	34110292
90LP/4-145TC	230/460V-60Hz, 2 hp	34610292
100LP/4-182TC	230/460V-60Hz, 3 hp	35110292
112MP/4-184TC	230/460V-60Hz, 5 hp	36110292
C-face 575V-60Hz Energy Efficient Motor		**Part Number**
80LP/4-56C	575V-60Hz, 1 hp	33610295
80LP/4-143TC	575V-60Hz, 1 hp	33610293
90SP/4-145TC	575V-60Hz, 1-1/2 hp	34110293
90LP/4-145TC	575V-60Hz, 2 hp	34610293
100LP/4-182TC	575V-60Hz, 3 hp	35110293
112MP/4-184TC	575V-60Hz, 5 hp	36110293

Send Quote Requests to info@automatedpt.com
Call +1(800)985-6929 To Order or Order Online At Nordgearmotors.com

Send Quote Requests to info@automatedpt.com
Call +1(800)985-6929 To Order or Order Online At Nordgearmotors.com

FLEXBLOC™ SK 1SI75
Part Numbers

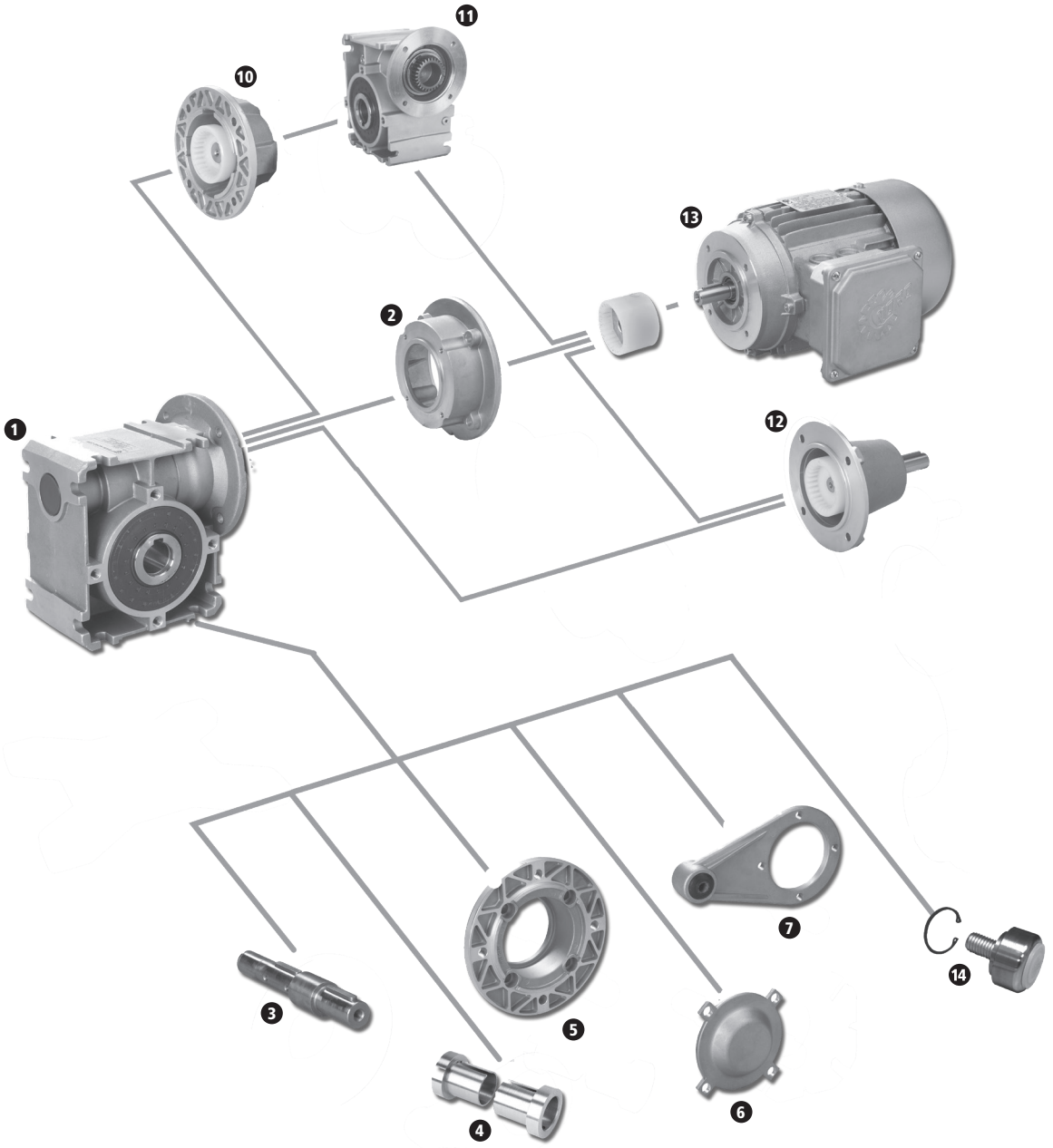

Send Quote Requests to info@automatedpt.com
Call +1(800)985-6929 To Order or Order Online At Nordgearmotors.com

NORD DRIVESYSTEMS

FLEXBLOC™ SK 1SI75 Part Numbers

CONFIGURATION

❶ Wormgearbox	1.9375 Hollow Shaft	35mm Hollow Shaft
Ratio i=5	60792050	60791050
Ratio i=7.5	60792080	60791080
Ratio i=10	60792100	60791100
Ratio i=12.5	60792130	60791130
Ratio i=15	60792150	60791150
Ratio i=20	60792200	60791200
Ratio i=25	60792250	60791250
Ratio i=30	60792300	60791300
Ratio i=40	60792400	60791400
Ratio i=50	60792500	60791500
Ratio i=60	60792600	60791600
Ratio i=80	60792800	60791800
Ratio i=100	60792000	60791000

❷ NEMA & IEC Adapter 110 & 118	Part Number
NEMA 56C	60795500
NEMA 140C	60795510
NEMA 180C	60795520
IEC 71 B14 C105	60795020
IEC 71 B14 C140	60795120
IEC 71 B5 A160	60795220
IEC 80 B14 C120	60795030
IEC 80 B14 C160	60795130
IEC 80 B5 A200	60795230
IEC 90 B14 C140	60795040
IEC 90 B14 C160	60795140
IEC 90 B5 A200	60795240
IEC 100 B14 C160	60795050
IEC 100 B14 C200	60795150
IEC 100 B5 A250	60795250
IEC 112 B14 C160	60795050
IEC 112 B14 C200	60795150
IEC 112 B5 A250	60795250

❸ Plug in Output Shaft - Inch 122		Part Number
Shaft	1.375″ x 70mm	60793010
Double Shaft	1.375″ x 70mm	60793110
Shaft for Output Flange B5	1.375″ x 70mm	60793210
Plug in Output Shaft - Metric 122		**Part Number**
Plug-in Shaft	35mm x 70mm	60793000
Double Plug-in Shaft	35mm x 70mm	60793100
Shaft for Output Flange B5	35mm x 70mm	60793200

❹ Hollow Shaft Bushing 111		Part Number
Hollow Shaft Bushing	1.1875″	60793430
Hollow Shaft Bushing	1.250″	60793400
Hollow Shaft Bushing	1.4375″	60793420
Hollow Shaft Bushing	1.500″	60793410

❺ Output Flange B5 111	Part Number
II Flange - 200mm	60793800

❻ Shaft Cover 107	Part Number
Shaft Cover	60793950

❼ Torque Arm 107	Part Number
Torque Arm	60793900

Open Vent (Not shown in image)	Part Number
Open Vent	60693500
AUTOVENT™	22008056

❿ Double Worm Adapter 116		Part Number
Inch	1.000″ (requires ⓫)	60794100
Metric	14mm (requires ⓫)	60794000

⓫ Double Worm Unit			
Inch	SK1SI40	1.000″ bore	Ratio Specific*
Metric	SK1SI40	18mm bore	Ratio Specific*

⓬ Solid Input Shaft 119		Part Number
Solid Input Shaft	0.875″ x 1.97″	60794210
Solid Input Shaft	24mm x 50mm	60794200

⓮ Fixing Kit	Part Number
Fixing Kit (Inch)	61282910
Fixing Kit (Metric)	82282310

⓭ C-face 230/460V-60Hz Standard Efficiency Motor		Part Number
63S/4-56C	230/460V-60Hz, 1/6 hp	31110012
63L/4-56C	230/460V-60Hz, 1/4 hp	31610012
71S/4-56C	230/460V-60Hz, 1/3 hp	32110012
71L/4-56C	230/460V-60Hz, 1/2 hp	32610012
80S/4-56C	230/460V-60Hz, 3/4 hp	33110012
80L/4-56C	230/460V-60Hz, 1 hp	33610022
C-face 575V-60Hz Standard Efficiency Motor		**Part Number**
63S/4-56C	575V-60Hz, 1/6 hp	31110013
63L/4-56C	575V-60Hz, 1/4 hp	31610013
71S/4-56C	575V-60Hz, 1/3 hp	32110013
71L/4-56C	575V-60Hz, 1/2 hp	32610013
80S/4-56C	575V-60Hz, 3/4 hp	33110013
C-face 230/460V-60Hz Energy Efficient Motor		**Part Number**
80LH/4-56C	230/460V-60Hz, 1 hp	33610094
80LH/4-143TC	230/460V-60Hz, 1 hp	33610092
90SH/4-145TC	230/460V-60Hz, 1-1/2 hp	34110092
90LH/4-145TC	230/460V-60Hz, 2 hp	34610092
100LH/4-182TC	230/460V-60Hz, 3 hp	35110092
112MH/4-184TC	230/460V-60Hz, 5 hp	36110092
C-face 575V-60Hz Energy Efficient Motor		**Part Number**
80LH/4-56C	575V-60Hz, 1 hp	33610095
80LH/4-143TC	575V-60Hz, 1 hp	33610093
90SH/4-145TC	575V-60Hz, 1-1/2 hp	34110093
90LH/4-145TC	575V-60Hz, 2 hp	34610093
100LH/4-182TC	575V-60Hz, 3 hp	35110093
112MH/4-184TC	575V-60Hz, 5 hp	36110093
C-face 230/460V-60Hz Energy Efficient Motor		**Part Number**
80LP/4-56C	230/460V-60Hz, 1 hp	33610294
80LP/4-143TC	230/460V-60Hz, 1 hp	33610292
90SP/4-145TC	230/460V-60Hz, 1-1/2 hp	34110292
90LP/4-145TC	230/460V-60Hz, 2 hp	34610292
100LP/4-182TC	230/460V-60Hz, 3 hp	35110292
112MP/4-184TC	230/460V-60Hz, 5 hp	36110292
C-face 575V-60Hz Energy Efficient Motor		**Part Number**
80LP/4-56C	575V-60Hz, 1 hp	33610295
80LP/4-143TC	575V-60Hz, 1 hp	33610293
90SP/4-145TC	575V-60Hz, 1-1/2 hp	34110293
90LP/4-145TC	575V-60Hz, 2 hp	34610293
100LP/4-182TC	575V-60Hz, 3 hp	35110293
112MP/4-184TC	575V-60Hz, 5 hp	36110293

Send Quote Requests to info@automatedpt.com
Call +1(800)985-6929 To Order or Order Online At Nordgearmotors.com

Send Quote Requests to info@automatedpt.com Call +1(800)985-6929 To Order or Order Online At Nordgearmotors.com

Inch FLEXBLOC™ Component Kits

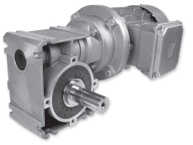

NORD DRIVESYSTEMS

CONFIGURATION

Inch Flexbloc Component Kits

	SK 1SI31, Ø 0.625	SK 1SI40, Ø 1.000	SK 1SI50, Ø 1.125	SK 1SI63, Ø 1.4375	SK 1SI75, Ø 1.9375
Worm Modules	60392050, i=5	60492050, i=5	60592050, i=5	60692050, i=5	60792050, i=5
	60392080, i=7.5	60492080, i=7.5	60592080, i=7.5	60692080, i=7.5	60792080, i=7.5
	60392100, i=10	60492100, i=10	60592100, i=10	60692100, i=10	60792100, i=10
	60392130, i=12.5	60492130, i=12.5	60592130, i=12.5	60692130, i=12.5	60792130, i=12.5
	60392150, i=15	60492150, i=15	60592150, i=15	60692150, i=15	60792150, i=15
	60392200, i=20	60492200, i=20	60592200, i=20	60692200, i=20	60792200, i=20
	60392250, i=25	60492250, i=25	60592250, i=25	60692250, i=25	60792250, i=25
	60392300, i=30	60492300, i=30	60592300, i=30	60692300, i=30	60792300, i=30
	60392400, i=40	60492400, i=40	60592400, i=40	60692400, i=40	60792400, i=40
	60392500, i=50	60492500, i=50	60592500, i=50	60692500, i=50	60792500, i=50
	60392600, i=60	60492600, i=60	60592600, i=60	60692600, i=60	60792600, i=60
	60392800, i=80	60492800, i=80	60592800, i=80	60362800, i=80	60792800, i=80
	60392000, i=100	60492000, i=100	60592000, i=100	60692000, i=100	60792000, i=100
NEMA 48C	60395500	N/A	N/A	N/A	N/A
NEMA 56C	60395510	60495500	60495500	60495500	60795500
NEMA 140TC	N/A	60595500	60595500	60595500	60795510
NEMA 180TC	N/A	N/A	N/A	60695500	60795520
Solid Input Shaft (W)	N/A	60494210, Ø 0.625	60494210, Ø 0.625	60494210, Ø 0.625	60794210, Ø 0.875
Helical Input Stage (H10)	N/A	60494000	60494000	60494000	N/A
Double Worm Adapter (/31, /40)	N/A	60494110, Ø 0.625	60494110, Ø 0.625	60494110, Ø 0.625	60794100, Ø 0.750
Plug-in Solid Shaft (V)	60393010, Ø 0.625	60493010, Ø 0.750	60593010, Ø 1.000	60693010, Ø 1.125	60793010, Ø 1.375
Double Solid Shaft (L)	60393110, Ø 0.625	60493110, Ø 0.750	60593110, Ø 1.000	60693110, Ø 1.125	60793110, Ø 1.375
Plug-in Shaft with Flange (VF)	60393210, Ø 0.625	60493210, Ø 0.750	60593210, Ø 1.000	60693210, Ø 1.125	60793210, Ø 1.375
Flange I (F)	60393800, Ø 4.13	60493800, Ø 4.72	60593800, Ø 6.30	60693800, Ø 7.87	N/A
Flange II (female pilot) (F)	60393810, Ø 3.15	60493810, Ø 4.33	60593810, Ø 4.92	60693810, Ø 7.09	60793800, Ø 7.87
Flange III (male pilot) (F)	60393820, Ø 3.15	N/A	60593820, Ø 4.92	N/A	N/A
Flange IV (F)	N/A	N/A	N/A	60693820, Ø 6.30	N/A
Torque Arm (D)	60393900, 3.54	60493900, 5.12	60593900, 5.12	60693900, 5.91	60793900, 7.87
	N/A	60493910, 3.94	60593920, 4.33	N/A	N/A
	N/A	N/A	60593910, 3.94	N/A	N/A
Shaft Cover (H)	60393950	60493950	60593950	60693950	60793950
Hollow Shaft Bushing (J)	N/A	N/A	60593400, Ø 1.000	60693400, Ø 1.000	60793430, Ø 1.1875
	N/A	N/A	N/A	60693410, Ø 1.1875	60793400, Ø 1.250
	N/A	N/A	N/A	60693420, Ø 1.250	60793420, Ø 1.4375
	N/A	N/A	N/A	N/A	60793410, Ø 1.500
Footplate (X)	60394600	60494600	60594600	60694600	N/A
Open vent (OV)	60693500	60693500	60693500	60693500	60693500
Fixing Kit (B)	60382910	60282930	60282930	82282920	61282910

Send Quote Requests to info@automatedpt.com
Call +1(800)985-6929 To Order or Order Online At Nordgearmotors.com

NORD DRIVESYSTEMS

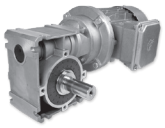

Metric FLEXBLOC™ Component Kits

Metric Flexbloc Component Kits

	SK 1SI31, Ø 14	SK 1SI40, Ø 18	SK 1SI50, Ø 25	SK 1SI63, Ø 25	SK 1SI75, Ø 35
Worm Modules	60391050, i=5	60491050, i=5	60591050, i=5	60691050, i=5	60791050, i=5
	60391050, i=7.5	60491080, i=7.5	60591080, i=7.5	60691080, i=7.5	60791080, i=7.5
	60391100, i=10	60491100, i=10	60591100, i=10	60691100, i=10	60791100, i=10
	60391130, i=12.5	60491130, i=12.5	60591130, i=12.5	60691130, i=12.5	60791130, i=12.5
	60392150, i=15	60491150, i=15	60591150, i=15	60691150, i=15	60791150, i=15
	60391200, i=20	60491200, i=20	60591200, i=20	60691200, i=20	60791200, i=20
	60391250, i=25	60491250, i=25	60591250, i=25	60691250, i=25	60791250, i=25
	60391300, i=30	60491300, i=30	60591300, i=30	60691300, i=30	60791300, i=30
	60391400, i=40	60491400, i=40	60591400, i=40	60691400, i=40	60791400, i=40
	60391500, i=50	60491500, i=50	60591500, i=50	60691500, i=50	60791500, i=50
	60391600, i=60	60491600, i=60	60591600, i=60	60691600, i=60	60791600, i=60
	60391800, i=80	60491800, i=80	60591800, i=80	60691800, i=80	60791800, i=80
	60391000, i=100	60491000, i=100	60591000, i=100	60691000, i=100	60791000, i=100
IEC 56 B14 C105	60395100	60495100	60495100	60495100	N/A
IEC 56 B5 A120	60395200	60495200	60495200	60495200	N/A
IEC 63 B14 C90	60395010*	60495010*	60495010*	60495010*	N/A
IEC 63 B14 C120	60395110	60495110	60495110	60495110	N/A
IEC 63 B5 A140	60395210	60495210	60495210	60495210	N/A
IEC 71 B14 C105	60395020*	60495020*	60495020*	60495020*	60795020*
IEC 71 B14 C140	60395120	60495120	60495120	60495120	60795120
IEC 71 B5 A160	N/A	60495220	60495220	60495220	60795220
IEC 80 B14 C120	N/A	60495030*	60495030*	60495030*	60795030*
IEC 80 B14 C160	N/A	60495130	60495130	60495130	60795130
IEC 80 B5 A200	N/A	60495230	60495230	60495230	60795230
IEC 90 B14 C140	N/A	60495040*	60495040*	60695040*	60795040*
IEC 90 B14 C160	N/A	60495140	60495140	60695140	60795140
IEC 90 B5 A200	N/A	N/A	N/A	60695240	60795240
IEC 100 B14 C160	N/A	N/A	N/A	N/A	60795050
IEC 100 B14 C200	N/A	N/A	N/A	N/A	60795150
IEC 100 B5 A250	N/A	N/A	N/A	N/A	60795250*
IEC 112 B14 C160	N/A	N/A	N/A	N/A	60795050
IEC 112 B14 C200	N/A	N/A	N/A	N/A	60795150
IEC 112 B5 A250	N/A	N/A	N/A	N/A	60795250*
Solid Input Shaft (W)	N/A	60494200, Ø 16	60494200, Ø 16	60494200, Ø 16	60794200, Ø 24
Helical Input Stage (H10)	N/A	60494000	60494000	60494000	N/A
Double Worm Adapter (/31, /40)	N/A	60494100, Ø 14	60494100, Ø 14	60494100, Ø 14	60794000, Ø 18
Plug-in Solid Shaft (V)	60393000, Ø 14	60493000, Ø 18	60593000, Ø 25	60693000, Ø 25	60793000, Ø 35
Double Solid Shaft (L)	60393100, Ø 14	60493100, Ø 18	60593100, Ø 25	60693100, Ø 25	60793100, Ø 35
Plug-in Solid Shaft with Flange (VF)	60393200, Ø 14	60493200, Ø 18	60593200, Ø 25	60693200, Ø 25	60793200, Ø 35
Flange I (F)	60393800, Ø 105	60493800, Ø 120	60593800, Ø 160	60693800, Ø 200	N/A
Flange II (female pilot) (F)	60393810, Ø 80	60493810, Ø 110	60593810, Ø 125	60693810, Ø 180	60793800, Ø 200
Flange III (male pilot) (F)	60393820, Ø 80	N/A	60593820, Ø 125	N/A	N/A
Flange IV (F)	N/A	N/A	N/A	60693820, Ø 160	N/A
Torque Arm (D)	60393900, 90mm	60493900, 130mm	60593900, 130mm	60693900, 150mm	60793900, 200mm
	N/A	60493910, 100mm	60593920, 110mm	N/A	N/A
	N/A	N/A	60593910, 100mm	N/A	N/A
Shaft Cover (H)	60393950	60493950	60593950	60693950	60793950
Footplate (X)	60394600	60494600	60594600	60694600	N/A
Open vent (OV)	60693500	60693500	60693500	60693500	60693500
Fixing Kit	60382330	60482340	60282310	60282310	82282310

*standard

Send Quote Requests to info@automatedpt.com
Call +1(800)985-6929 To Order or Order Online At Nordgearmotors.com

Part Numbers
C-Face Motors

DRIVESYSTEMS

C-FACE MOTORS

C-face 230/460V-60Hz Standard Efficiency		Part Number
63S/4-56C	230/460V-60Hz, 1/6 hp	31110012
63L/4-56C	230/460V-60Hz, 1/4 hp	31610012
71S/4-56C	230/460V-60Hz, 1/3 hp	32110012
71L/4-56C	230/460V-60Hz, 1/2 hp	32610012
80S/4-56C	230/460V-60Hz, 3/4 hp	33110012
80L/4-56C	230/460V-60Hz, 1 hp	33610022

C-face 230/460V-60Hz Energy Efficient ee		Part Number
80LH/4-56C	230/460V-60Hz, 1 hp	33610094
80LH/4-143TC	230/460V-60Hz, 1 hp	33610092
90SH/4-145TC	230/460V-60Hz, 1-1/2 hp	34110092
90LH/4-145TC	230/460V-60Hz, 2 hp	34610092
100LH/4-182TC	230/460V-60Hz, 3 hp	35110092
112MH/4-184TC	230/460V-60Hz, 5 hp	36110082

C-face 230/460V-60Hz Premium Efficient pe		Part Number
80LP/4-56C	230/460V-60Hz, 1 hp	33610294
80LP/4-143TC	230/460V-60Hz, 1 hp	33610292
90SP/4-145TC	230/460V-60Hz, 1-1/2 hp	34110292
90LP/4-145TC	230/460V-60Hz, 2 hp	34610292
100LP/4-182TC	230/460V-60Hz, 3 hp	35110292
112MP/4-184TC	230/460V-60Hz, 5 hp	36110292

C-face 575V-60Hz Standard Efficiency		Part Number
63S/4-56C	575V-60Hz, 1/6 hp	31110013
63L/4-56C	575V-60Hz, 1/4 hp	31610013
71S/4-56C	575V-60Hz, 1/3 hp	32110013
71L/4-56C	575V-60Hz, 1/2 hp	32610013
80S/4-56C	575V-60Hz, 3/4 hp	33110013
80L/4-56C	575V-60Hz, 1 hp	33610023

C-face 575V-60Hz Energy Efficient ee		Part Number
80LH/4-56C	575V-60Hz, 1 hp	33610095
80LH/4-143TC	575V-60Hz, 1 hp	33610093
90SH/4-145TC	575V-60Hz, 1-1/2 hp	34110093
90LH/4-145TC	575V-60Hz, 2 hp	34610093
100LH/4-182TC	575V-60Hz, 3 hp	35110093
112MH/4-184TC	575V-60Hz, 5 hp	36110083

C-face 575V-60Hz Premium Efficient pe		Part Number
80LP/4-56C	575V-60Hz, 1 hp	33610295
80LP/4-143TC	575V-60Hz, 1 hp	33610293
90SP/4-145TC	575V-60Hz, 1-1/2 hp	34110293
90LP/4-145TC	575V-60Hz, 2 hp	34610293
100LP/4-182TC	575V-60Hz, 3 hp	35110293
112MP/4-184TC	575V-60Hz, 5 hp	36110293

Send Quote Requests to info@automatedpt.com
Call +1(800)985-6929 To Order or Order Online At Nordgearmotors.com

Send Quote Requests to info@automatedpt.com Call +1(800)985-6929 To Order or Order Online At Nordgearmotors.com

Part Numbers
C-Face Brakemotors

C-face 230/460V-60Hz Standard Efficiency - Brakemotor		Part Number
63S/4-56C BRE5 HL	230/460V-60Hz, 1/6 hp, 230VAC brake with hand release lever	31110034
63L/4-56C BRE5 HL	230/460V-60Hz, 1/4 hp, 230VAC brake with hand release lever	31610034
71S/4-56C BRE5 HL	230/460V-60Hz, 1/3 hp, 230VAC brake with hand release lever	32110034
71L/4-56C BRE5 HL	230/460V-60Hz, 1/2 hp, 230VAC brake with hand release lever	32610034
80S/4-56C BRE10 HL	230/460V-60Hz, 3/4 hp, 230VAC brake with hand release lever	33110034
80L/4-56C BRE10 HL	230/460V-60Hz, 1 hp, 230VAC brake with hand release lever	33610024

C-face 230/460V-60Hz Energy Efficient - Brakemotor ee		Part Number
80LH/4-56C BRE10 HL	230/460V-60Hz, 1 hp, 230VAC brake with hand release lever	33610082
80LH/4-143TC BRE 10 HL	230/460V-60Hz, 1 hp, 230VAC brake with hand release lever	33610084
90SH/4-145TC BRE 20 HL	230/460V-60Hz, 1-1/2 hp, 230VAC brake with hand release lever	34110084
90LH/4-145TC BRE 20 HL	230/460V-60Hz, 2 hp, 230VAC brake with hand release lever	34610084
100LH/4-182TC BRE 40 HL	230/460V-60Hz, 3 hp, 230VAC brake with hand release lever	35110084
112MH/4-184TC BRE 40 HL	230/460V-60Hz, 5 hp, 230VAC brake with hand release lever	36110084

C-face 230/460V-60Hz Premium Efficient - Brakemotor pe		Part Number
80LP/4-56C BRE10 HL	230/460V-60Hz, 1 hp, 230VAC brake with hand release lever	33610282
80LP/4-143TC BRE 10 HL	230/460V-60Hz, 1 hp, 230VAC brake with hand release lever	33610284
90SP/4-145TC BRE 20 HL	230/460V-60Hz, 1-1/2 hp, 230VAC brake with hand release lever	33610286
90LP/4-145TC BRE 20 HL	230/460V-60Hz, 2 hp, 230VAC brake with hand release lever	33610288
100LP/4-182TC BRE 40 HL	230/460V-60Hz, 3 hp, 230VAC brake with hand release lever	33610290
112MP/4-184TC BRE 40 HL	230/460V-60Hz, 5 hp, 230VAC brake with hand release lever	33610292

C-face 575V-60Hz Standard Efficiency - Brakemotor		Part Number
63S/4-56C BRE5 HL	575V-60Hz, 1/6 hp, 575VAC brake with hand release lever	31110035
63L/4-56C BRE5 HL	575V-60Hz, 1/4 hp, 575VAC brake with hand release lever	31610035
71S/4-56C BRE5 HL	575V-60Hz, 1/3 hp, 575VAC brake with hand release lever	32110035
71L/4-56C BRE5 HL	575V-60Hz, 1/2 hp, 575VAC brake with hand release lever	32610035
80S/4-56C BRE10 HL	575V-60Hz, 3/4 hp, 575VAC brake with hand release lever	33110035
80L/4-56C BRE10 HL	575V-60Hz, 1 hp, 575VAC brake with hand release lever	33610025

C-face 575V-60Hz Energy Efficient - Brakemotor ee		Part Number
80LH/4-56C BRE10 HL	230/460V-60Hz, 1 hp, 230VAC brake with hand release lever	33610083
80LH/4-143TC BRE 10 HL	575V-60Hz, 1 hp, 230VAC brake with hand release lever	33610085
90SH/4-145TC BRE 20 HL	575V-60Hz, 1-1/2 hp, 230VAC brake with hand release lever	34110085
90LH/4-145TC BRE 20 HL	575V-60Hz, 2 hp, 230VAC brake with hand release lever	34610085
100LH/4-182TC BRE 40 HL	575V-60Hz, 3 hp, 230VAC brake with hand release lever	35110085
112MH/4-184TC BRE 40 HL	575V-60Hz, 5 hp, 230VAC brake with hand release lever	36110085

C-face 575V-60Hz Premium Efficient - Brakemotor pe		Part Number
80LP/4-56C BRE10 HL	230/460V-60Hz, 1 hp, 230VAC brake with hand release lever	33610283
80LP/4-143TC BRE 10 HL	575V-60Hz, 1 hp, 230VAC brake with hand release lever	33610285
90SP/4-145TC BRE 20 HL	575V-60Hz, 1-1/2 hp, 230VAC brake with hand release lever	34110285
90LP/4-145TC BRE 20 HL	575V-60Hz, 2 hp, 230VAC brake with hand release lever	34610285
100LP/4-182TC BRE 40 HL	575V-60Hz, 3 hp, 230VAC brake with hand release lever	35110285
112MP/4-184TC BRE 40 HL	575V-60Hz, 5 hp, 230VAC brake with hand release lever	36110285

Send Quote Requests to info@automatedpt.com
Call +1(800)985-6929 To Order or Order Online At Nordgearmotors.com

Send Quote Requests to info@automatedpt.com
Call +1(800)985-6929 To Order or Order Online At Nordgearmotors.com

Notes

NOTES

Send Quote Requests to info@automatedpt.com
Call +1(800)985-6929 To Order or Order Online At Nordgearmotors.com

FLEXBLOC™ Dimensions

Dimensions

- SK 1SI31
- SK 1SI40
- SK 1SI50
- SK 1SI63
- SK 1SI75
- SK 1SI Options

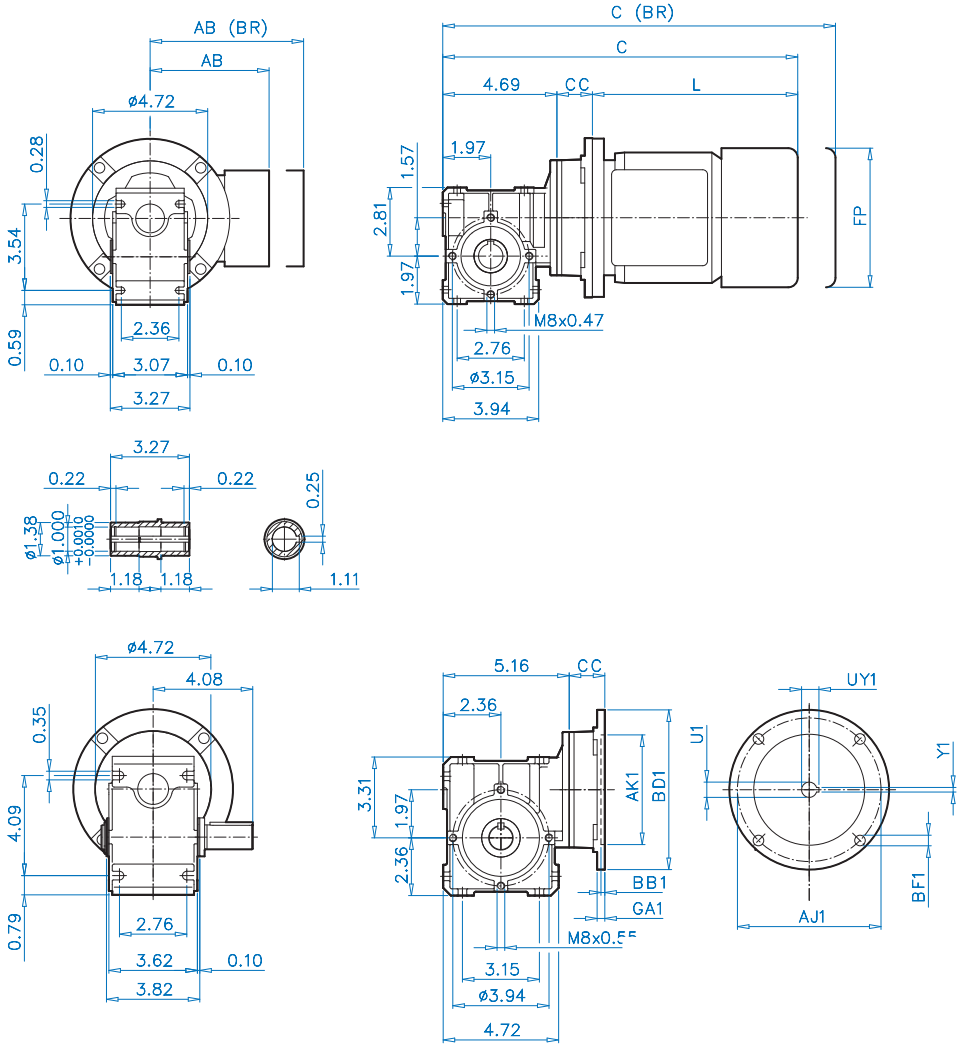

NORD® DRIVESYSTEMS

www.nord.com

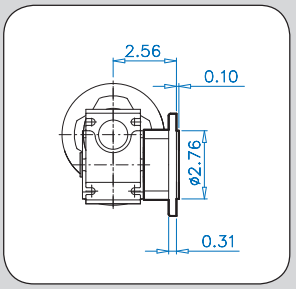

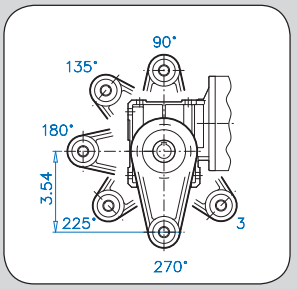

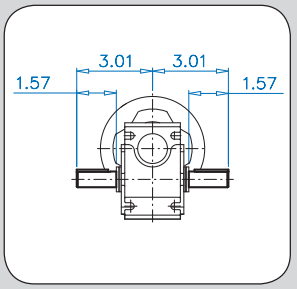

SK 1SI31

DRIVESYSTEMS

SK 1SI31 + Motor

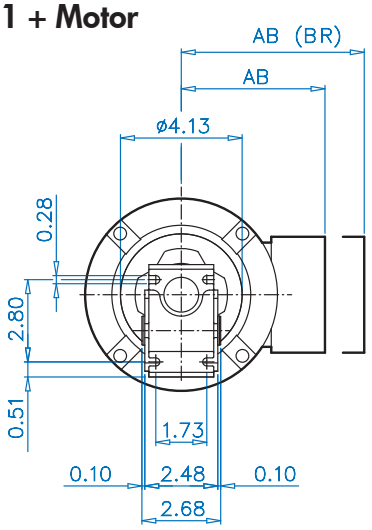

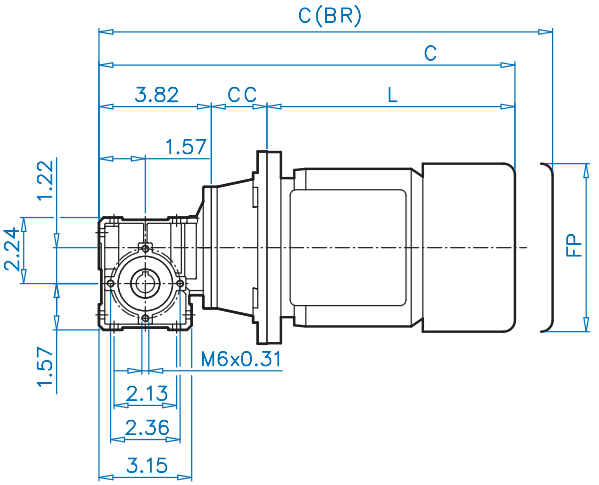

SK 1SI31 A (Hollow Shaft Detail)

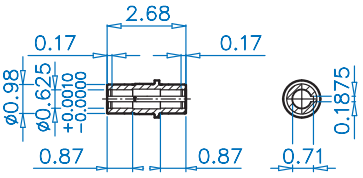

CUSTOMER SUPPLIED KEY – 3/16 x 3/16

Motor dimensions

Standard eff.	56C-63S/L	56C-71S/L	56C-80S/L
Energy eff.			56C-80LH
Premium eff.			56C-80LP
AB	4.53	4.88	5.59
AB (BR)	4.84	5.24	5.63
C	13.27	14.13	15.16
C (BR)	15.47	16.42	17.68
CC	1.89	1.89	1.89
FP	5.12	5.71	6.50
L	7.56	8.43	9.45
L (BR)	9.76	10.71	11.97

(BR) denotes Brakemotor

SK 1SI31 + NEMA

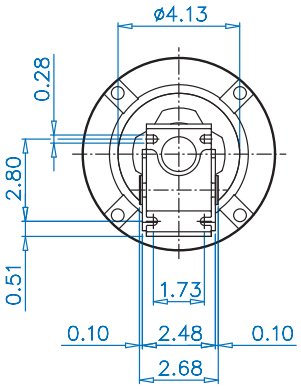

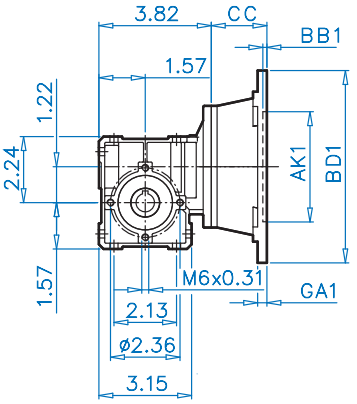

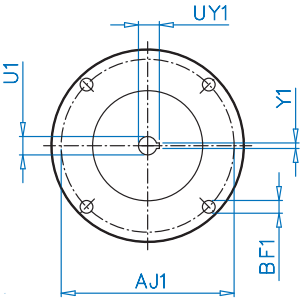

CONFIGURATIONS SEE PAGE 79

NEMA Dimensions

Type	AJ1	AK1	BB1	BD1	BF1	CC	GA1	U1	UY1	V1	Y1
48C	3.75	3.00	0.16	4.33	0.29	1.50	0.25	0.500	flat	1.69	flat
56C	5.875	4.50	0.16	6.54	0.43	1.89	0.50	0.625	0.71	2.06	0.1875

Send Quote Requests to info@automatedpt.com
Call +1(800)985-6929 To Order or Order Online At Nordgearmotors.com

NORD DRIVESYSTEMS

SK 1SI 31
Hollow Shaft Options

SK 1SI31 F (I Flange)

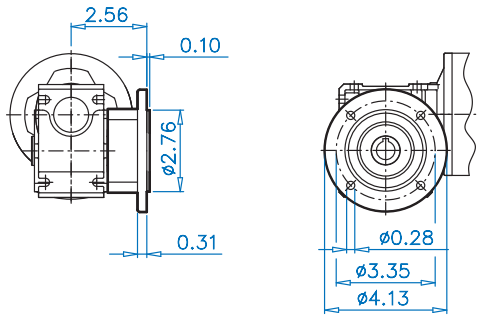

SK 1SI31 F (II Flange)

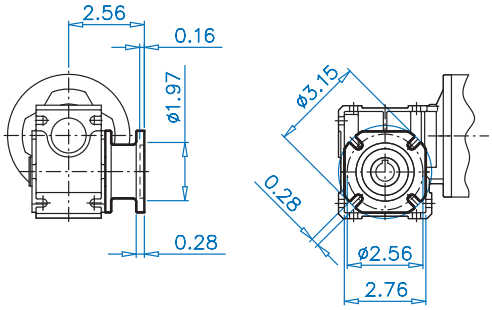

SK 1SI31 F (III Flange)

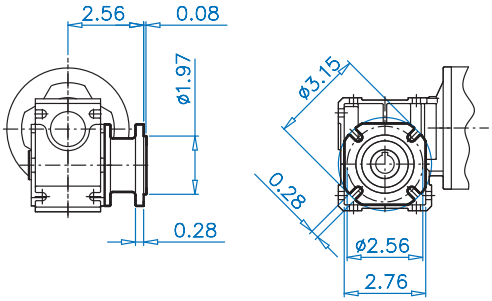

SK 1SI31 X (Footplate)

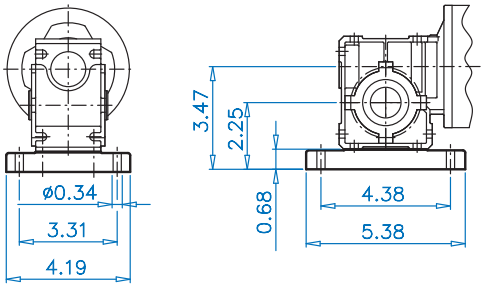

SK 1SI31 D (Torque Arm)

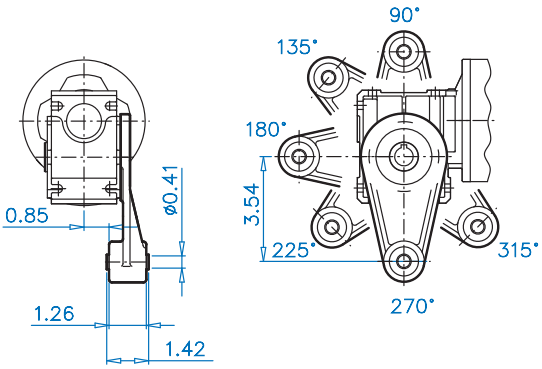

SK 1SI31 H (Shaft Cover)

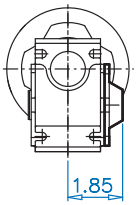

CONFIGURATIONS SEE PAGE 79

Send Quote Requests to info@automatedpt.com
Call +1(800)985-6929 To Order or Order Online At Nordgearmotors.com

SK 1SI31

DRIVESYSTEMS

SK 1SI31 V (Plug-In Shaft) + Motor

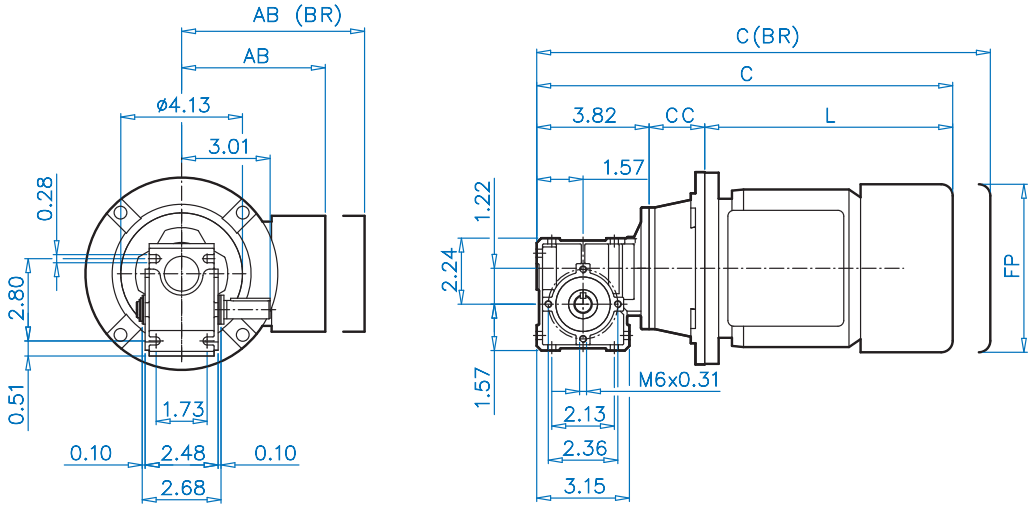

Motor dimensions

Standard eff.	56C-63S/L	56C-71S/L	56C-80S/L
Energy eff.			56C-80LH
Premium eff.			56C-80LP
AB	4.53	4.88	5.59
AB (BR)	4.84	5.24	5.63
C	13.27	14.13	15.16
C (BR)	15.47	16.42	17.68
CC	1.89	1.89	1.89
FP	5.12	5.71	6.50
L	7.56	8.43	9.45
L (BR)	9.76	10.71	11.97

(BR) denotes Brakemotor

SK 1SI31 V (Solid Shaft Detail)

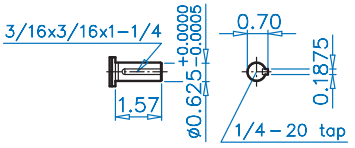

SK 1SI31 V (Plug-In Shaft) + NEMA

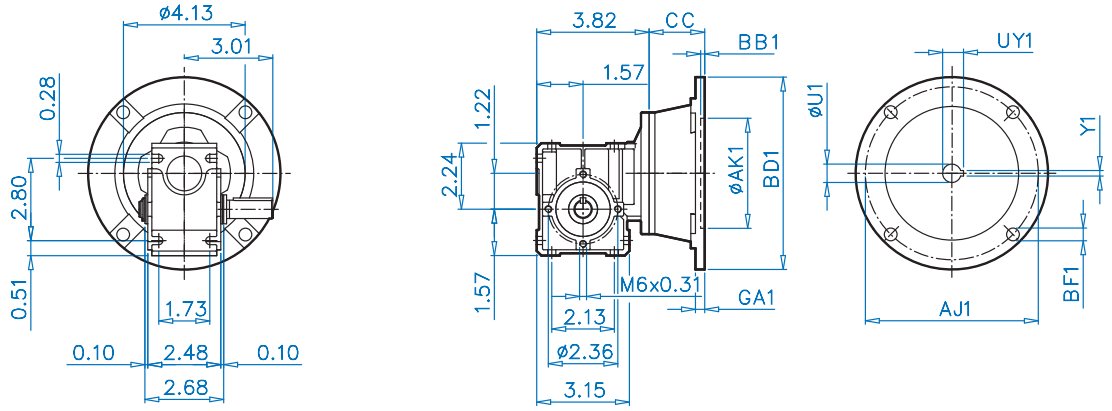

NEMA Dimensions

Type	AJ1	AK1	BB1	BD1	BF1	CC	GA1	U1	UY1	V1	Y1
48C	3.75	3.00	0.16	4.33	0.29	1.50	0.25	0.500	flat	1.69	flat
56C	5.875	4.50	0.16	6.54	0.43	1.89	0.50	0.625	0.71	2.06	0.1875

CONFIGURATIONS SEE PAGE 79

Send Quote Requests to info@automatedpt.com
Call +1(800)985-6929 To Order or Order Online At Nordgearmotors.com

NORD DRIVESYSTEMS

SK 1SI 31
Solid Shaft Options

SK 1SI31 VF (Plug-In Shaft, I Flange)

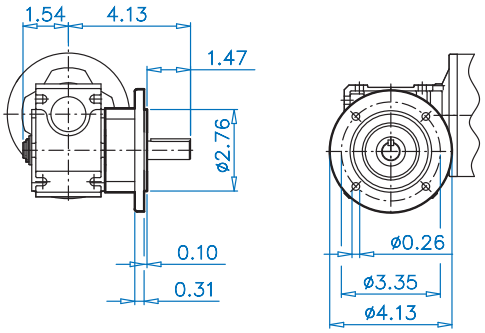

SK 1SI31 VF (Plug-In Shaft, II Flange)

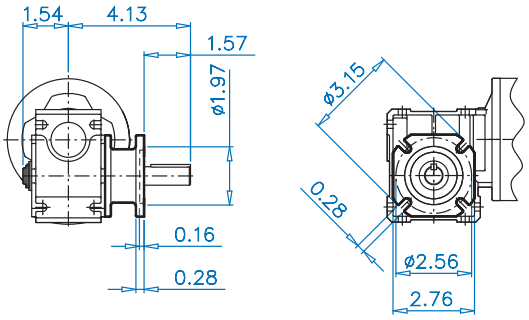

SK 1SI31 VF (Plug-In Shaft, III Flange)

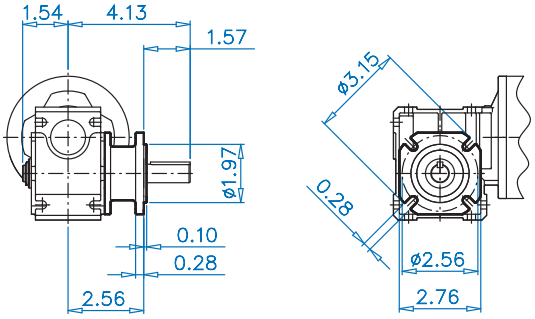

SK 1SI31 VX (Footplate)

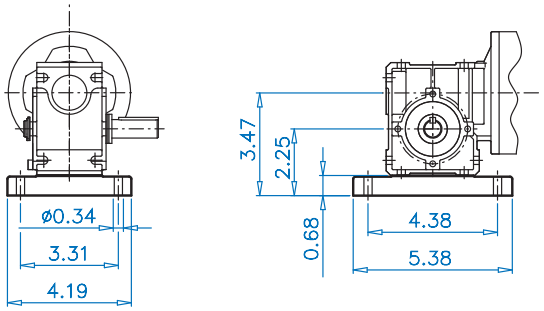

SK 1SI31 VH (Plug-In Shaft, Shaft Cover)

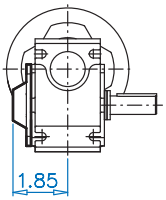

SK 1SI31 L (Double Solid Shaft)

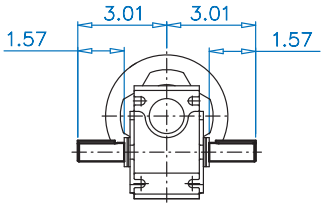

CONFIGURATIONS SEE PAGE 79

Send Quote Requests to info@automatedpt.com
Call +1(800)985-6929 To Order or Order Online At Nordgearmotors.com

SK 1SI40

DRIVESYSTEMS

SK 1SI40 + Motor

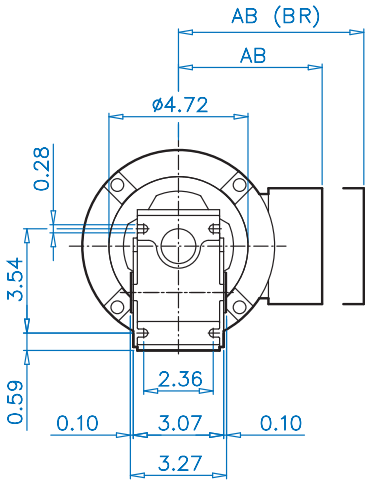

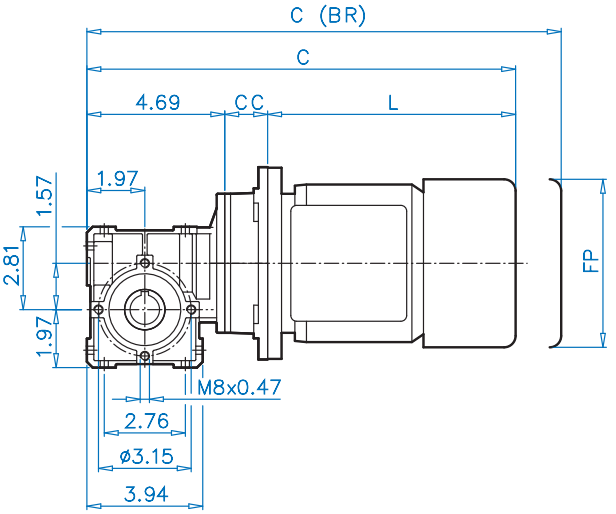

SK 1SI40 A (Hollow Shaft Detail)

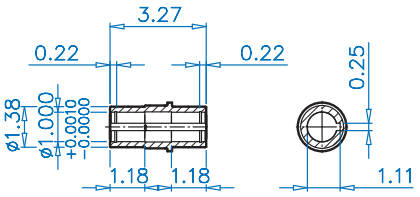

CUSTOMER SUPPLIED KEY – 1/4 x 1/4

Motor dimensions

Standard eff.	56C-63S/L	56C-71S/L	56C-80S/L		
Energy eff.			56C-80LH	140TC-80LH	140TC-90SH/LH
Premium eff.			56C-80LP	140TC-80LP	140TC-90SP/LP
AB	4.53	4.88	5.59	5.59	5.79
AB (BR)	4.84	5.24	5.63	5.63	5.83
C	13.70	14.57	15.59	16.06	17.64
C (BR)	15.91	16.85	18.11	18.58	20.59
CC	1.46	1.46	1.46	1.93	1.93
FP	5.12	5.71	6.50	6.50	7.20
L	7.56	8.43	9.45	9.45	11.02
L (BR)	9.76	10.71	11.97	11.97	13.98

(BR) denotes Brakemotor

SK 1SI40 + NEMA

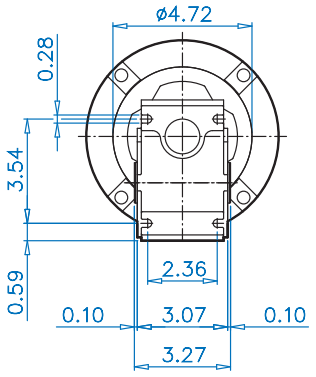

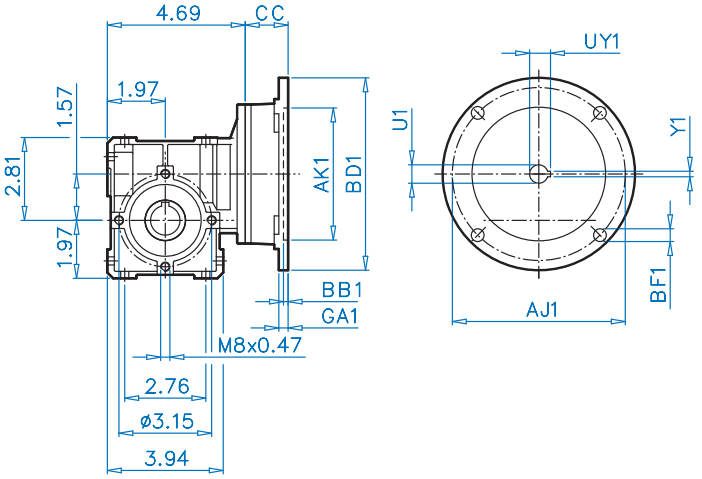

NEMA Dimensions

Type	AJ1	AK1	BB1	BD1	BF1	CC	GA1	U1	UY1	V1	Y1
56C	5.875	4.50	0.16	6.54	0.43	1.46	0.50	0.625	0.71	2.06	0.1875
140TC	5.875	4.50	0.16	6.54	0.43	1.93	0.50	0.875	0.96	2.12	0.1875

CONFIGURATIONS SEE PAGE 81

Send Quote Requests to info@automatedpt.com
Call +1(800)985-6929 To Order or Order Online At Nordgearmotors.com

NORD DRIVESYSTEMS

SK 1SI40 Hollow Shaft Options

SK 1SI40 F (I Flange)

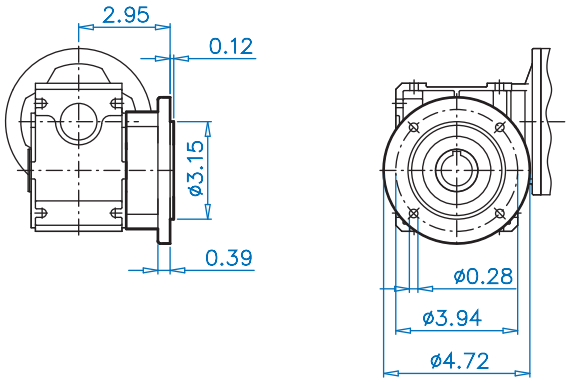

SK 1SI40 F (II Flange)

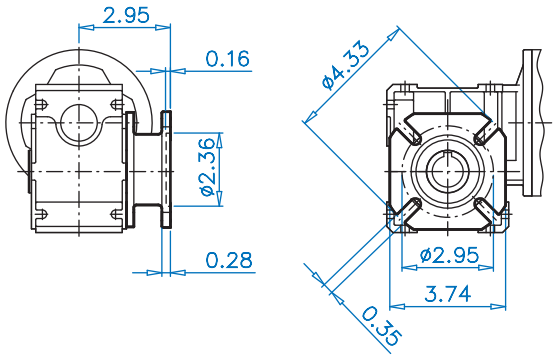

SK 1SI40 D (Torque Arm)

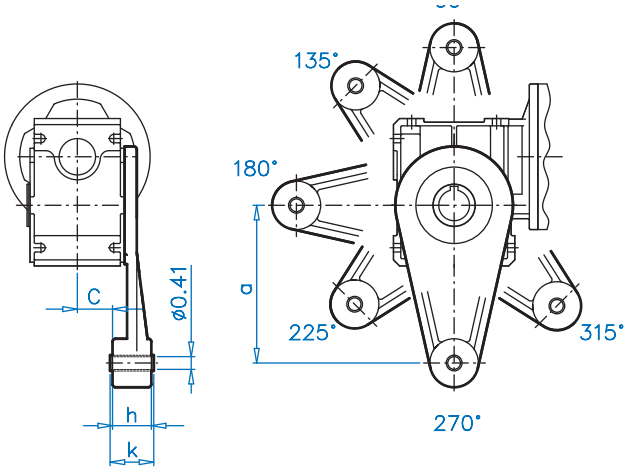

SK 1SI40 X (Footplate)

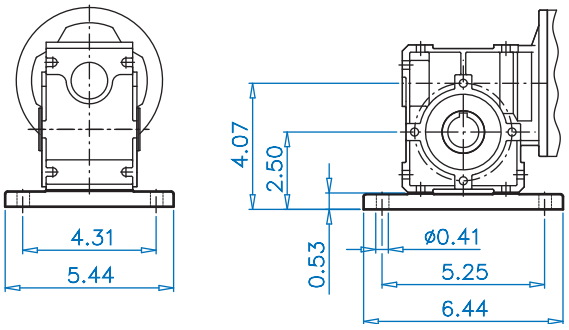

Torque Arm Dimensions

	a	c	h	k	Part number
I*	5.12	1.14	1.26	1.42	60493900
III	3.94	1.34	0.55	0.55	60490770

* Standard torque arm offering, other options must be requested

SK 1SI40 H (Shaft Cover)

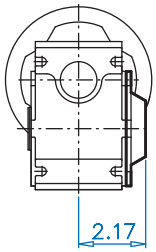

CONFIGURATIONS SEE PAGE 81

Send Quote Requests to info@automatedpt.com
Call +1(800)985-6929 To Order or Order Online At Nordgearmotors.com

SK 1SI40

DRIVESYSTEMS

DIMENSIONS — Dimensions in Inches

SK 1SI40 V (Plug-In Shaft) + Motor

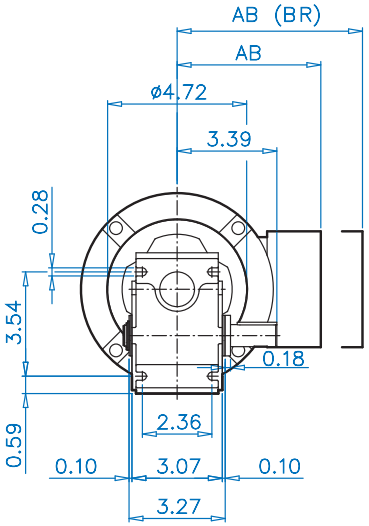

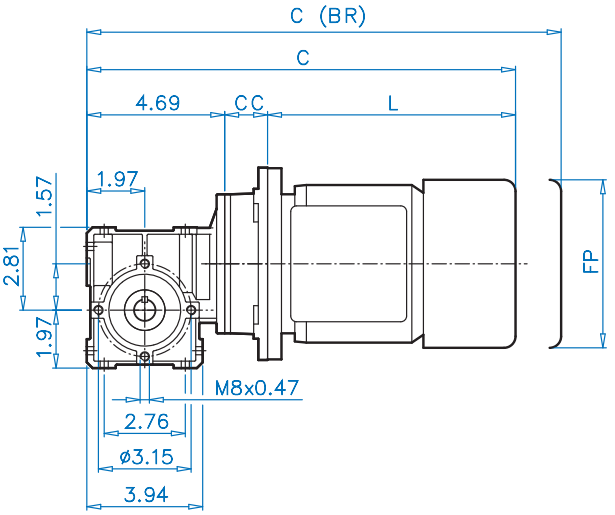

Motor dimensions

Standard eff.	56C-63S/L	56-C71S/L	56C-80S/L		
Energy eff.			56C-80LH	140TC-80LH	140TC-90SH/LH
Premium eff.			56C-80LP	140TC-80LP	140TC-90SP/LP
AB	4.53	4.88	5.59	5.59	5.79
AB (BR)	4.84	5.24	5.63	5.63	5.83
C	13.70	14.57	15.59	16.06	17.64
C (BR)	15.91	16.85	18.11	18.58	20.59
CC	1.46	1.46	1.46	1.93	1.93
FP	5.12	5.71	6.50	6.50	7.20
L	7.56	8.43	9.45	9.45	11.02
L (BR)	9.76	10.71	11.97	11.97	13.98

(BR) denotes Brakemotor

SK 1SI40 V (Solid Shaft Detail)

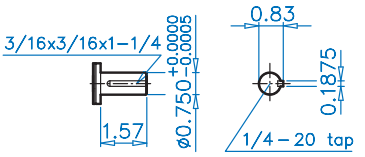

SK 1SI40 V (Plug-In Shaft) + NEMA

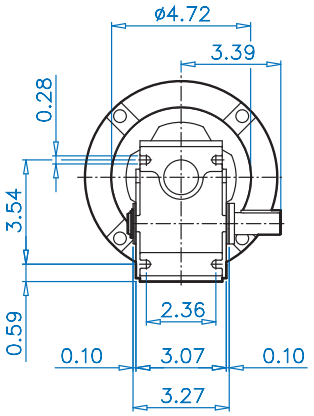

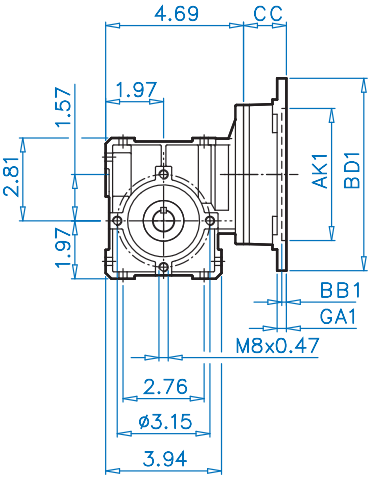

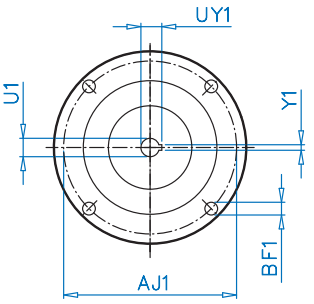

NEMA Dimensions

Type	AJ1	AK1	BB1	BD1	BF1	CC	GA1	U1	UY1	V1	Y1
56C	5.875	4.50	0.16	6.54	0.43	1.46	0.50	0.625	0.71	2.06	0.1875
140TC	5.875	4.50	0.16	6.54	0.43	1.93	0.50	0.875	0.96	2.12	0.1875

CONFIGURATIONS SEE PAGE 81

Send Quote Requests to info@automatedpt.com
Call +1(800)985-6929 To Order or Order Online At Nordgearmotors.com

NORD DRIVESYSTEMS

SK 1SI40
Solid Shaft Options

SK 1SI40 VF (Plug-In Shaft, I Flange)

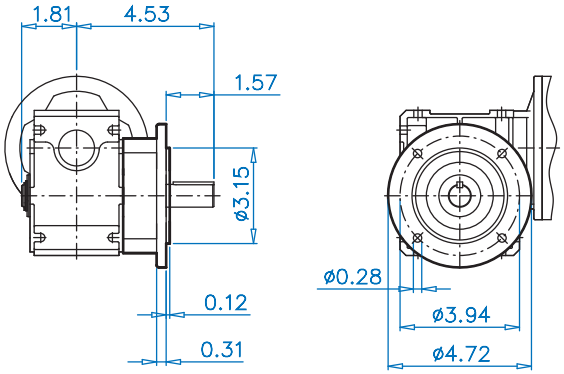

SK 1SI40 VF (Plug-In Shaft, II Flange)

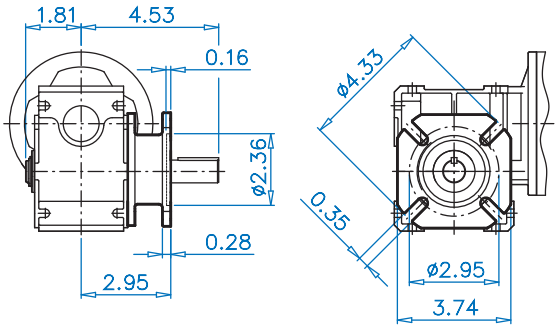

SK 1SI40 L (Double Solid Shaft)

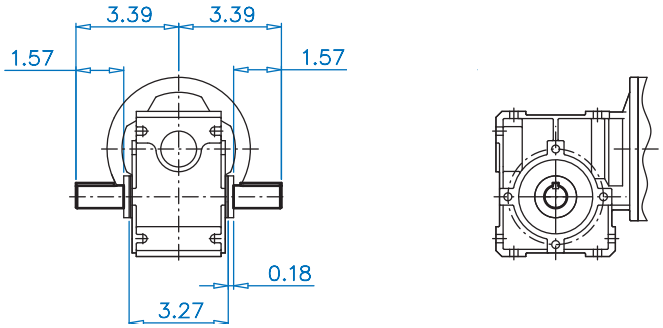

SK 1SI40 VX (Plug-In Shaft, Footplate)

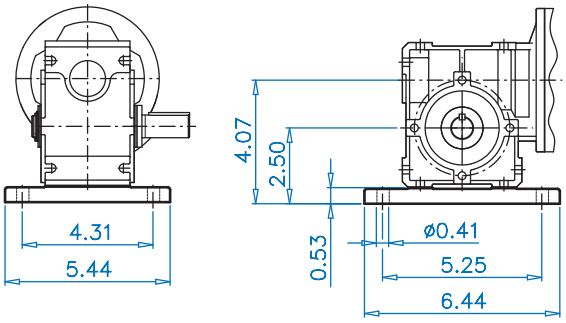

SK 1SI40 VH (Plug-In Shaft, Cover)

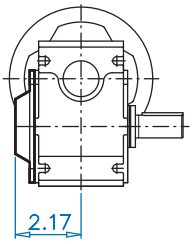

CONFIGURATIONS SEE PAGE 81

Send Quote Requests to info@automatedpt.com
Call +1(800)985-6929 To Order or Order Online At Nordgearmotors.com

SK 1SI50

DRIVESYSTEMS

SK 1SI50 + Motor

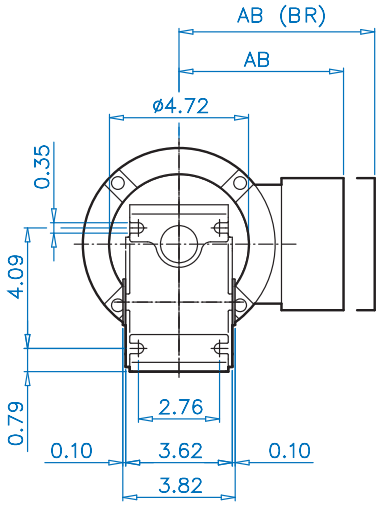

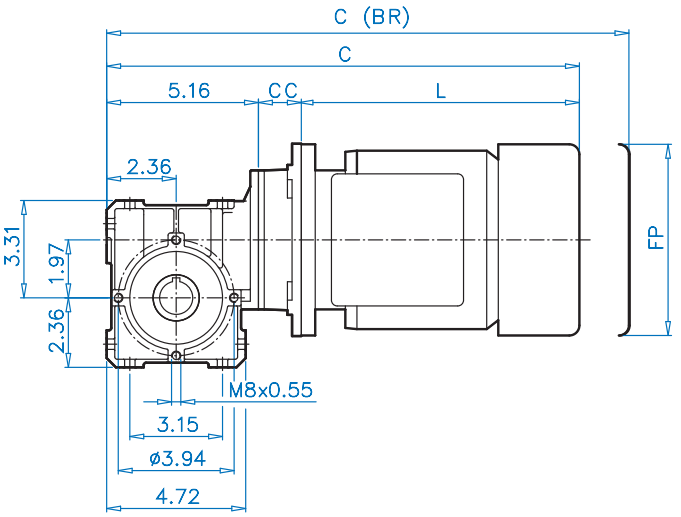

SK 1SI50 A (Hollow Shaft Detail)

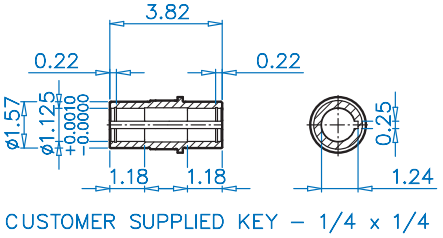

Motor dimensions

Standard eff.	56C-63S/L	56C-71S/L	56C-80S/L		
Energy eff.			56C-80LH	140TC-80LH	140TC-90SH/LH
Premium eff.			56C-80LP	140TC-80LP	140TC-90SP/LP
AB	4.53	4.88	5.59	5.59	5.79
AB(BR)	4.84	5.24	5.63	5.63	5.83
C	14.17	15.04	16.06	16.54	18.11
C(BR)	16.38	17.32	18.58	19.06	21.06
CC	1.46	1.46	1.46	1.93	1.93
FP	5.12	5.71	6.50	6.50	7.20
L	7.56	8.43	9.45	9.45	11.02
L(BR)	9.76	10.71	11.97	11.97	13.98

(BR) denotes Brakemotor

SK 1SI50 + NEMA

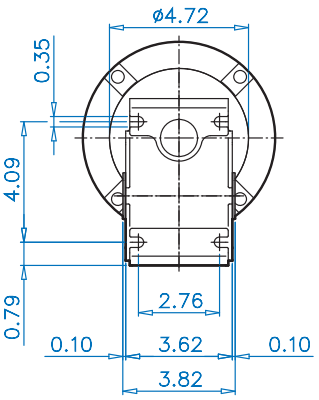

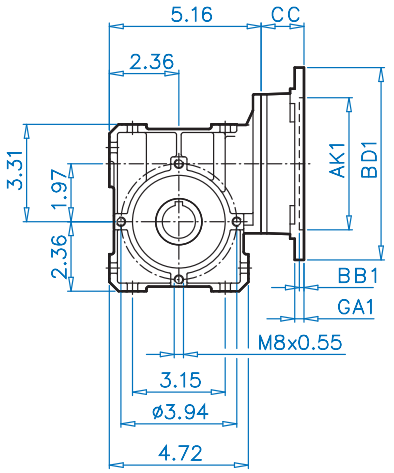

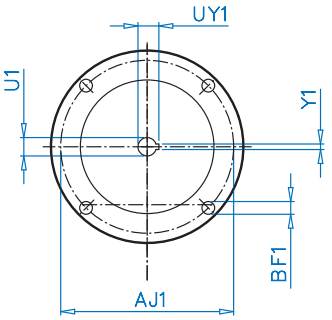

NEMA Dimensions

Type	AJ1	AK1	BB1	BD1	BF1	CC	GA1	U1	UY1	V1	Y1
56C	5.875	4.50	0.16	6.54	0.43	1.46	0.50	0.625	0.71	2.06	0.1875
140TC	5.875	4.50	0.16	6.54	0.43	1.93	0.50	0.875	0.96	2.12	0.1875

CONFIGURATIONS SEE PAGE 83

Send Quote Requests to info@automatedpt.com
Call +1(800)985-6929 To Order or Order Online At Nordgearmotors.com

NORD DRIVESYSTEMS

SK 1SI50 Hollow Shaft Options

SK 1SI50 F (I Flange)

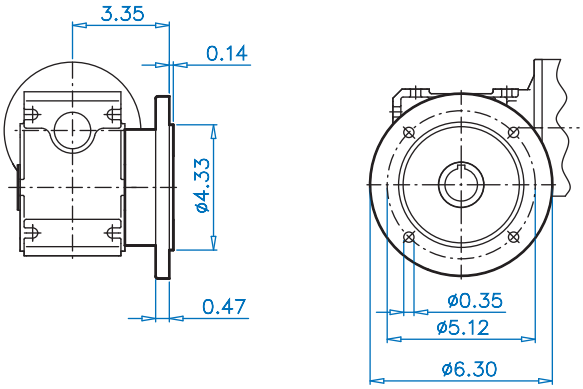

SK 1SI50 F (II Flange)

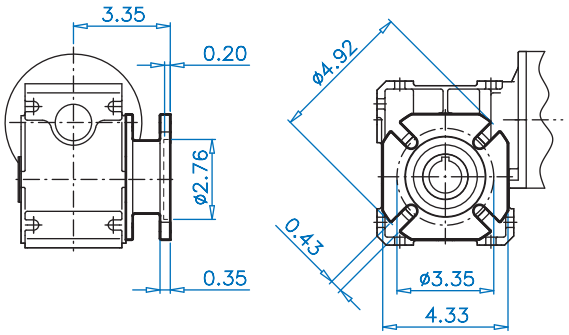

SK 1SI50 F (III Flange)

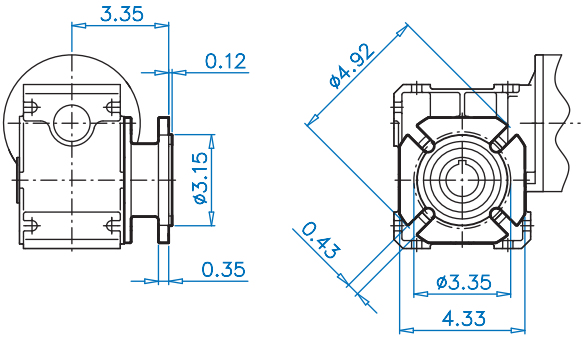

SK 1SI50 X (Footplate)

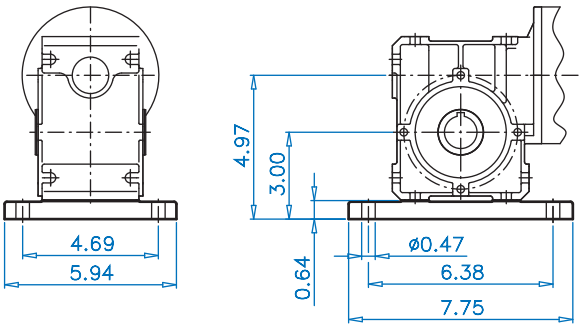

SK 1SI50 D (Torque Arm)

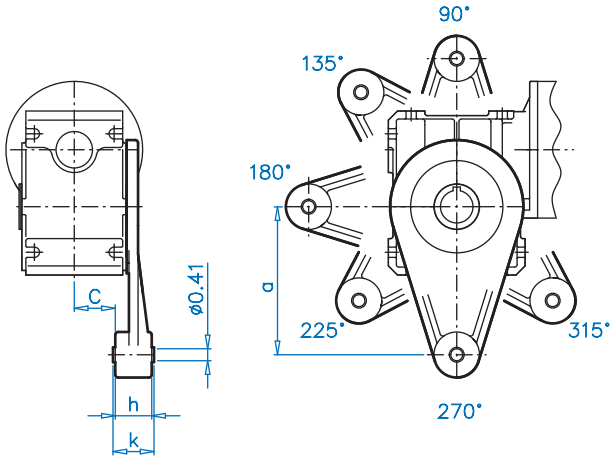

SK 1SI50 H (Shaft Cover)

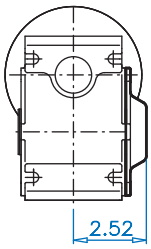

SK 1SI50 J (1.00" Bushing Kit)

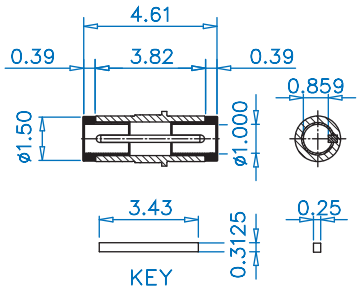

CONFIGURATIONS SEE PAGE 83

Torque Arm Dimensions

	a	c	h	k	Part number
I*	5.12	1.42	1.26	1.42	60593900
II	4.33	1.61	0.55	0.55	60593920
III	3.94	1.61	0.55	0.55	60593910

* Standard torque arm offering, other options must be requested

Send Quote Requests to info@automatedpt.com
Call +1(800)985-6929 To Order or Order Online At Nordgearmotors.com

SK 1SI50

DRIVESYSTEMS

SK 1SI50 V (Plug-In Shaft) + Motor

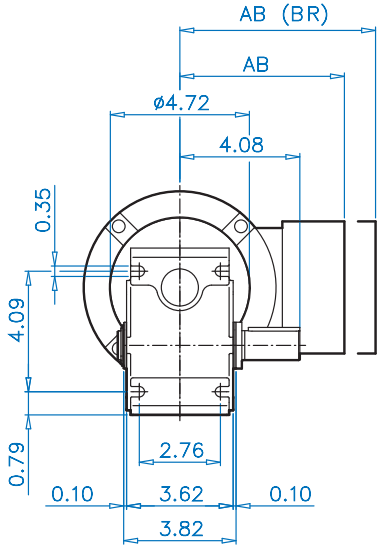

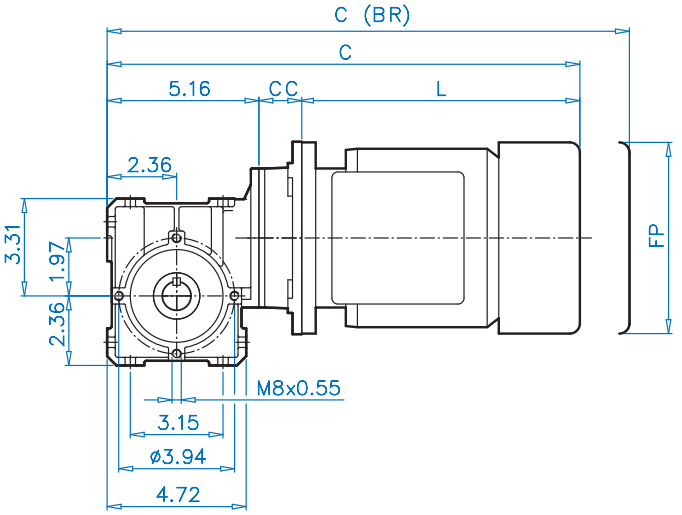

Motor dimensions

Standard eff.	56C-63S/L	56C-71S/L	56C-80S/L		
Energy eff.			56C-80LH	140TC-80LH	140TC-90SH/LH
Premium eff.			56C-80LP	140TC-80LP	140TC-90SP/LP
AB	4.53	4.88	5.59	5.59	5.79
AB (BR)	4.84	5.24	5.63	5.63	5.83
C	14.17	15.04	16.06	16.54	18.11
C (BR)	16.38	17.32	18.58	19.06	21.06
CC	1.46	1.46	1.46	1.93	1.93
FP	5.12	5.71	6.50	6.50	7.20
L	7.56	8.43	9.45	9.45	11.02
L (BR)	9.76	10.71	11.97	11.97	13.98

(BR) denotes Brakemotor

SK 1SI50 V (Solid Shaft Detail)

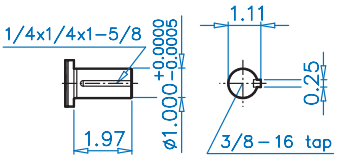

SK 1SI50 V (Plug-In Shaft) + NEMA

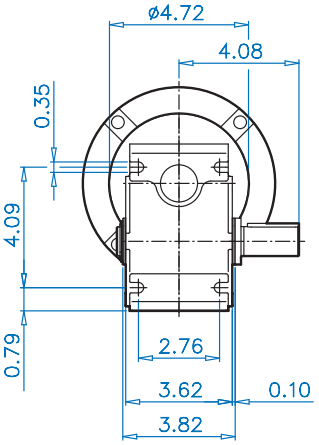

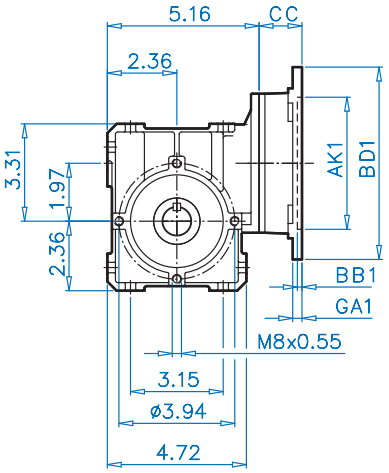

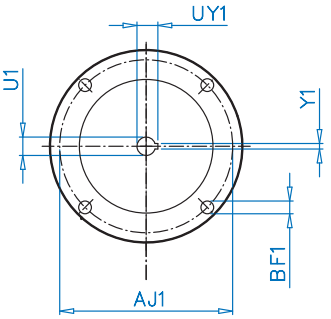

NEMA Dimensions

Type	AJ1	AK1	BB1	BD1	BF1	CC	GA1	U1	UY1	V1	Y1
56C	5.875	4.50	0.16	6.54	0.43	1.46	0.50	0.625	0.71	2.06	0.1875
140TC	5.875	4.50	0.16	6.54	0.43	1.93	0.50	0.875	0.96	2.12	0.1875

CONFIGURATIONS SEE PAGE 83

Send Quote Requests to info@automatedpt.com
Call +1(800)985-6929 To Order or Order Online At Nordgearmotors.com

NORD DRIVESYSTEMS

SK 1SI50 Solid Shaft Options

SK 1SI 50 VF (Plug-In Shaft, I Flange)

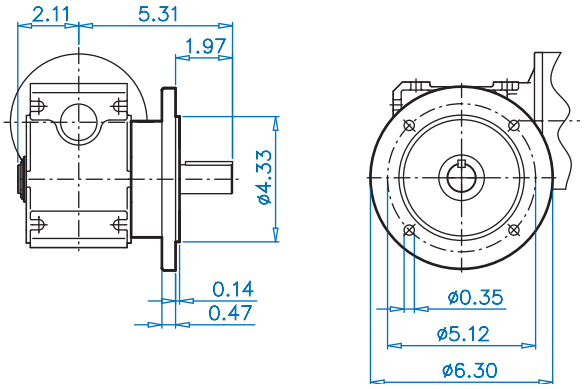

SK 1SI50 VF (Plug-In Shaft , II Flange)

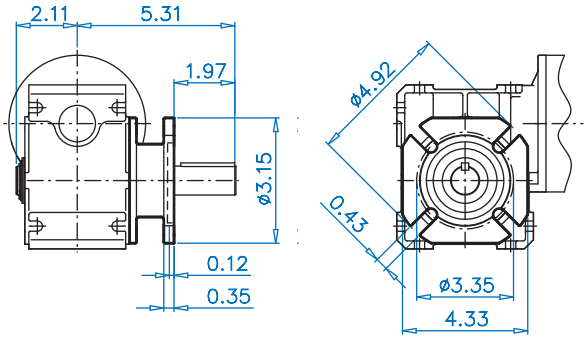

SK 1SI50 VF (Plug-In Shaft, III Flange)

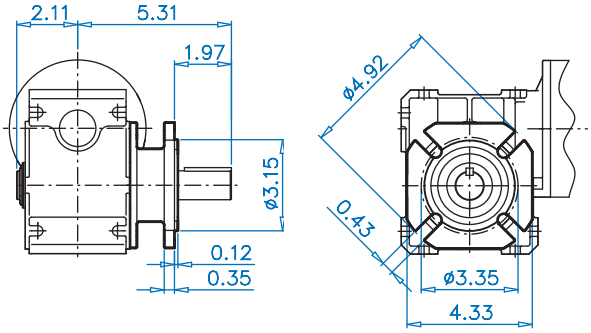

SK 1SI50 VX (Plug-In Shaft, Footplate)

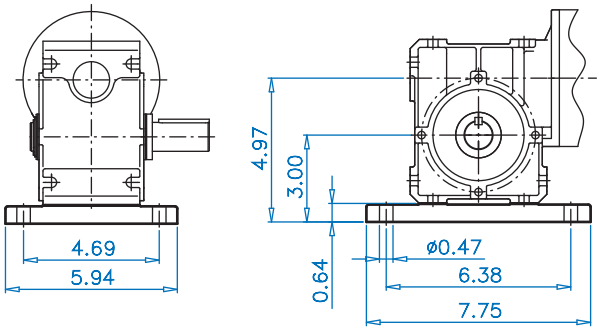

SK 1SI50 VH (Plug-In Shaft, Cover)

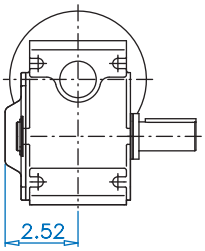

SK 1SI50 L (Double Solid Shaft)

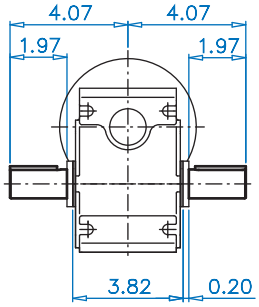

CONFIGURATIONS SEE PAGE 83

Send Quote Requests to info@automatedpt.com
Call +1(800)985-6929 To Order or Order Online At Nordgearmotors.com

SK 1SI63

DRIVESYSTEMS

SK 1SI63 + Motor

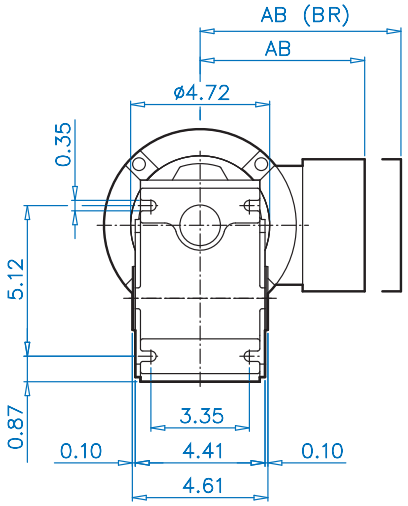

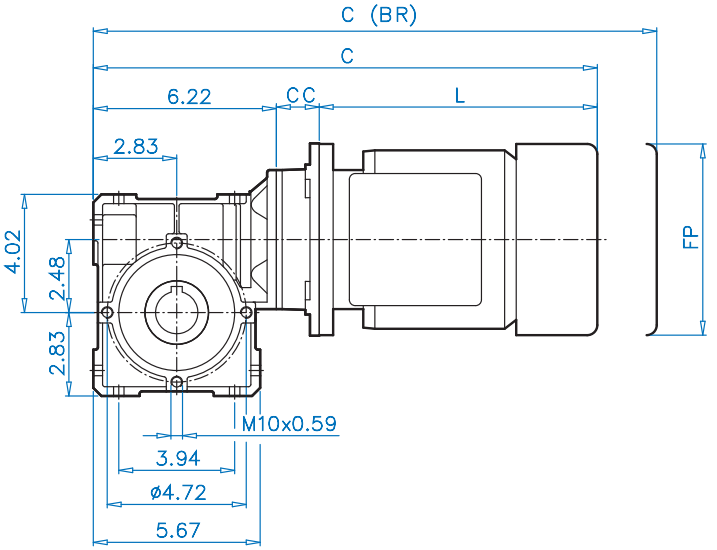

SK 1SI63 A (Hollow Shaft Detail)

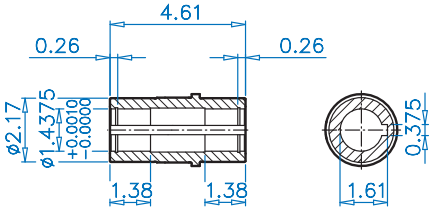

CUSTOMER SUPPLIED KEY – 3/8 x 3/8

Motor dimensions

Standard eff.	56C-63S/L	56C-71S/L	56C-80S/L			
Energy eff.			56C-80LH	140TC-80LH	140TC-90SH/LH	180TC-100LH
Premium eff.			56C-80LP	140TC-80LP	140TC-90SP/LP	180TC-100LP
AB	4.53	4.88	5.59	5.59	5.79	6.65
AB (BR)	4.84	5.24	5.63	5.63	5.83	6.26
C	15.24	16.10	17.16	17.60	19.17	21.33
C (BR)	17.44	18.39	19.68	20.12	22.13	24.91
CC	1.46	1.46	1.46	1.93	1.93	3.06
FP	5.12	5.71	6.50	6.50	7.20	7.91
L	7.56	8.43	9.45	9.45	11.02	12.05
L (BR)	9.76	10.71	11.97	11.97	13.98	15.63

(BR) denotes Brakemotor

SK 1SI63 + NEMA

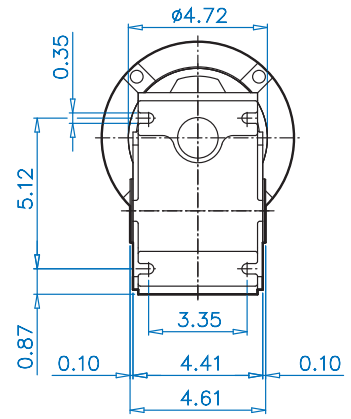

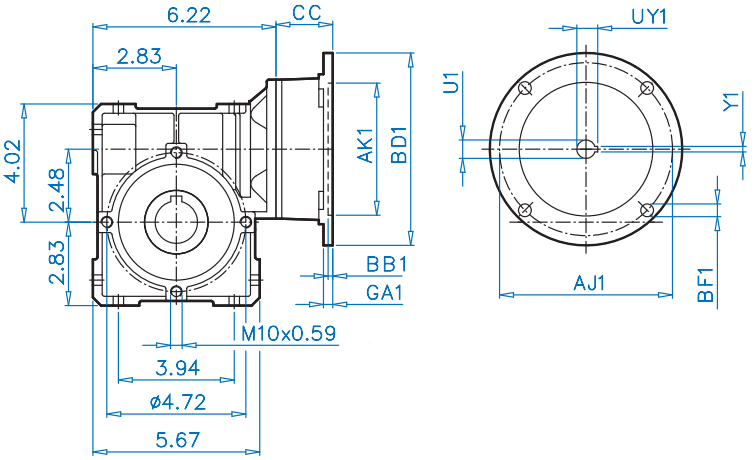

NEMA Dimensions

Type	AJ1	AK1	BB1	BD1	BF1	CC	GA1	U1	UY1	V1	Y1
56C	5.875	4.50	0.16	6.54	0.43	1.46	0.50	0.625	0.71	2.06	0.1875
140TC	5.875	4.50	0.16	6.54	0.43	1.93	0.50	0.875	0.96	2.12	0.1875
180TC	7.25	8.50	0.25	9.17	0.59	3.06	0.63	1.125	1.24	2.62	0.25

CONFIGURATIONS SEE PAGE 85

Send Quote Requests to info@automatedpt.com
Call +1(800)985-6929 To Order or Order Online At Nordgearmotors.com

NORD DRIVESYSTEMS

SK 1SI63 Hollow Shaft Options

SK 1SI63 F (I Flange)

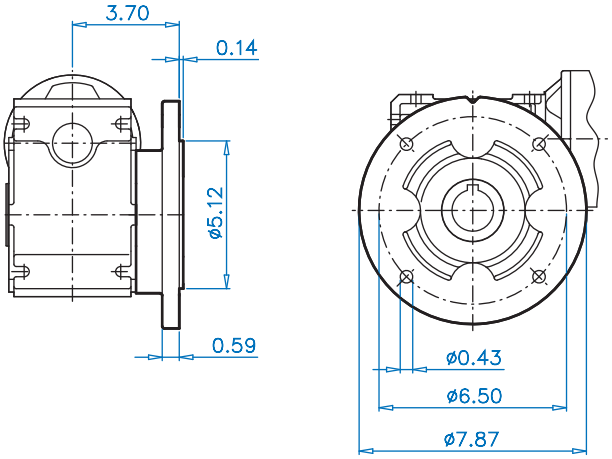

SK 1SI63 F (II Flange)

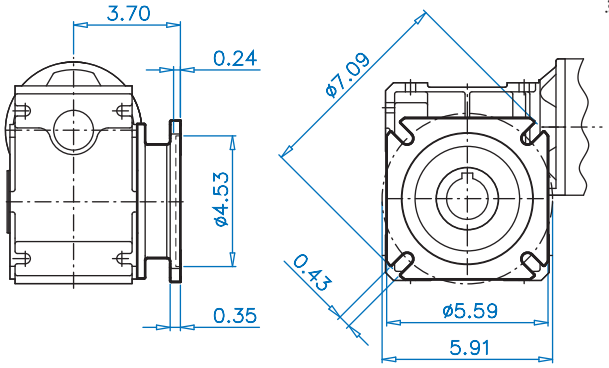

SK 1SI63 F (IV Flange)

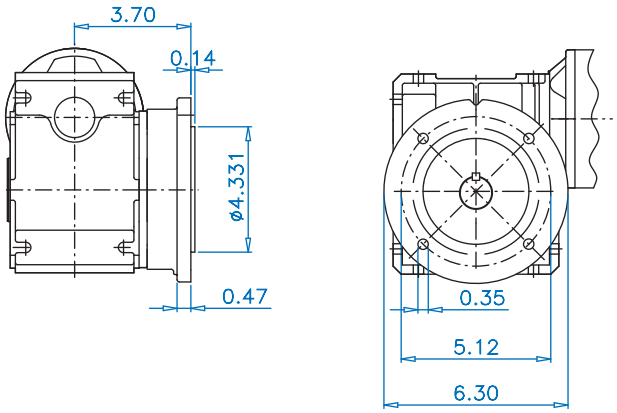

SK 1SI63 D (Torque Arm)

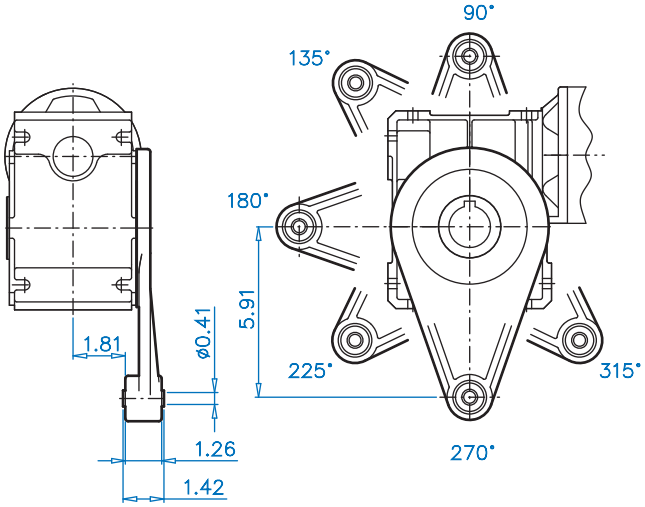

SK 1SI63 H (Cover)

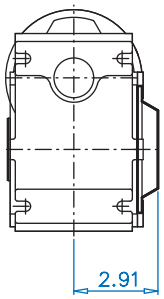

SK 1SI63 J (Bushing Kits)

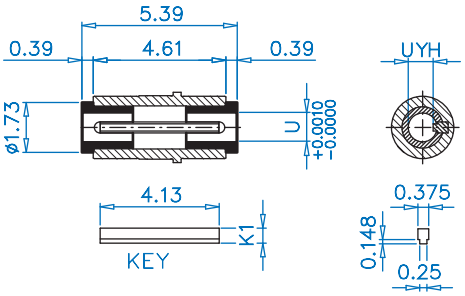

Bushing Kit Dimensions Table

U	UYH	K1
1.000	0.859	0.522
1.1875	0.986	0.425
1.250	1.112	0.394

CONFIGURATIONS SEE PAGE 85

Send Quote Requests to info@automatedpt.com
Call +1(800)985-6929 To Order or Order Online At Nordgearmotors.com

SK 1SI63

DRIVESYSTEMS

DIMENSIONS — Dimensions in Inches

SK 1SI63 V (Plug-In Shaft) + Motor

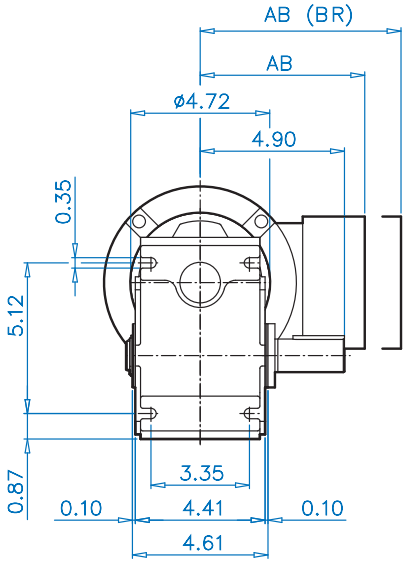

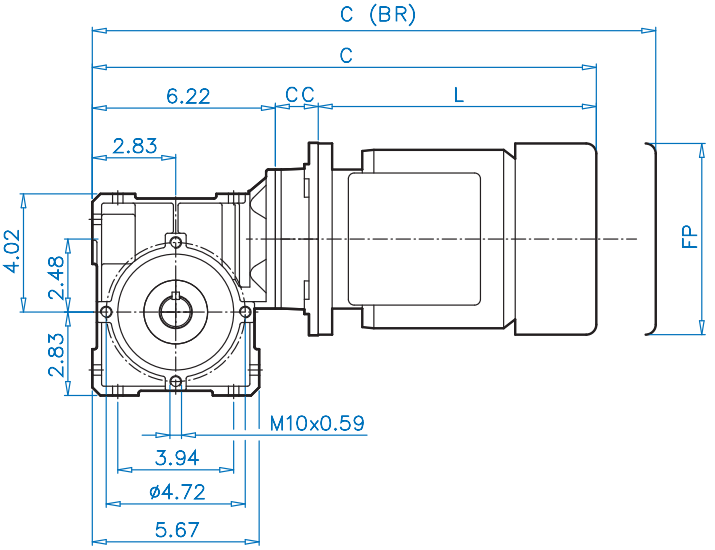

Motor dimensions

Standard eff.	56C-63S/L	56C-71S/L	56C-80S/L			
Energy eff.			56C-80LH	140TC-80LH	140TC-90SH/LH	180TC-100LH
Premium eff.			56C-80LP	140TC-80LP	140TC-90SP/LP	180TC-100LP
AB	4.53	4.88	5.59	5.59	5.79	6.65
AB (BR)	4.84	5.24	5.63	5.63	5.83	6.26
C	15.24	16.10	17.16	17.60	19.17	21.33
C (BR)	17.44	18.39	19.68	20.12	22.13	24.91
CC	1.46	1.46	1.46	1.93	1.93	3.06
FP	5.12	5.71	6.50	6.50	7.20	7.91
L	7.56	8.43	9.45	9.45	11.02	12.05
L (BR)	9.76	10.71	11.97	11.97	13.98	15.63

(BR) denotes Brakemotor

SK 1SI63 V (Solid Shaft Detail)

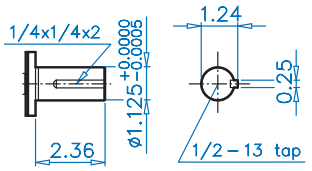

CONFIGURATIONS SEE PAGE 85

SK 1SI 63 + NEMA

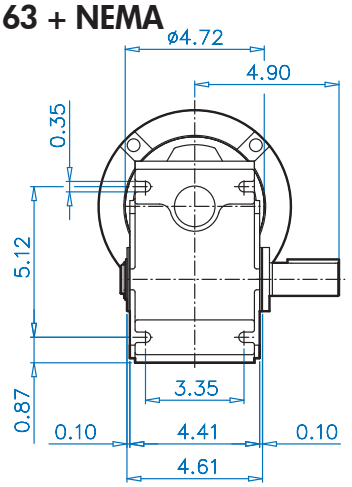

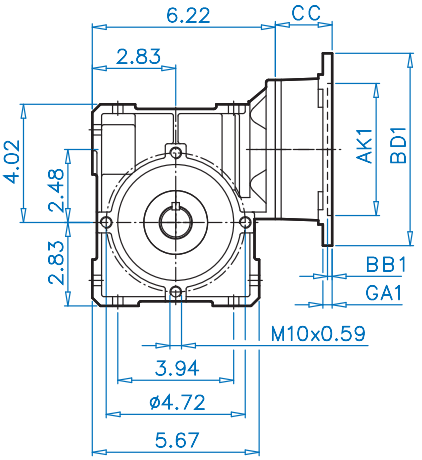

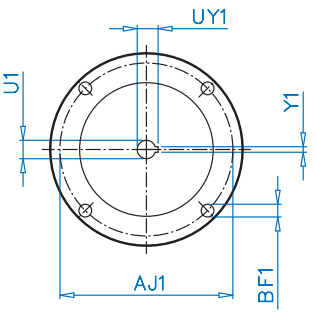

NEMA Dimensions

Type	AJ1	AK1	BB1	BD1	BF1	CC	GA1	U1	UY1	V1	Y1
56C	5.875	4.50	0.16	6.54	0.43	1.46	0.50	0.625	0.71	2.06	0.1875
140TC	5.875	4.50	0.16	6.54	0.43	1.93	0.50	0.875	0.96	2.12	0.1875
180TC	7.25	8.50	0.25	9.17	0.59	3.06	0.63	1.125	1.24	2.62	0.25

Send Quote Requests to info@automatedpt.com
Call +1(800)985-6929 To Order or Order Online At Nordgearmotors.com

Send Quote Requests to info@automatedpt.com
Call +1(800)985-6929 To Order or Order Online At Nordgearmotors.com

SK 1SI63
Solid Shaft Options

SK 1SI63 VF (Plug-In Shaft, I Flange)

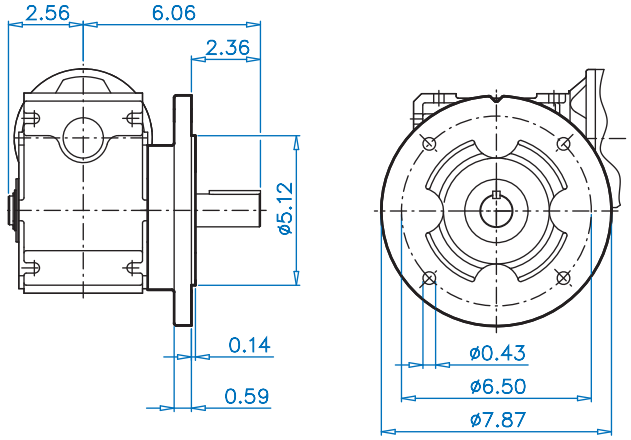

SK 1SI63 VF (Plug-In Shaft, II Flange)

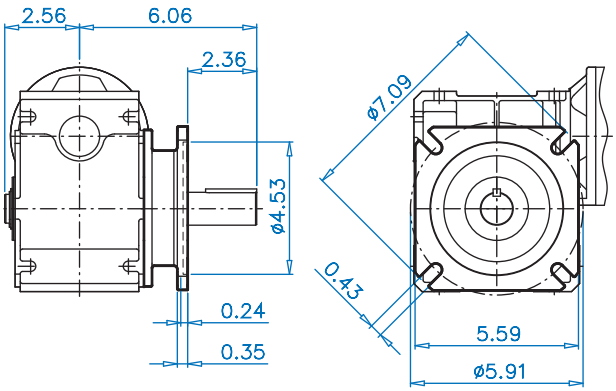

SK 1SI63 VF (Plug-In Shaft, IV Flange)

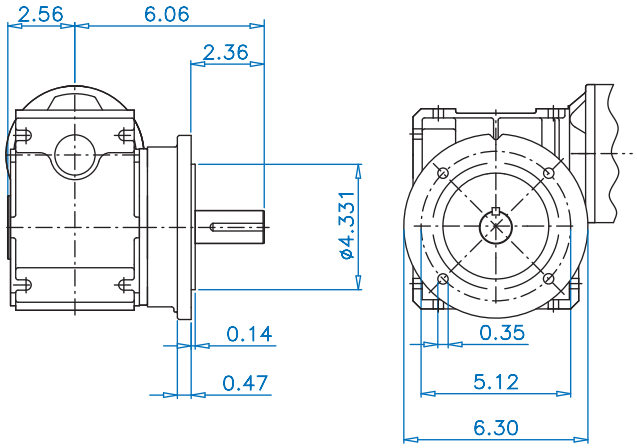

SK 1SI63 X (Plug-In Shaft, Footplate)

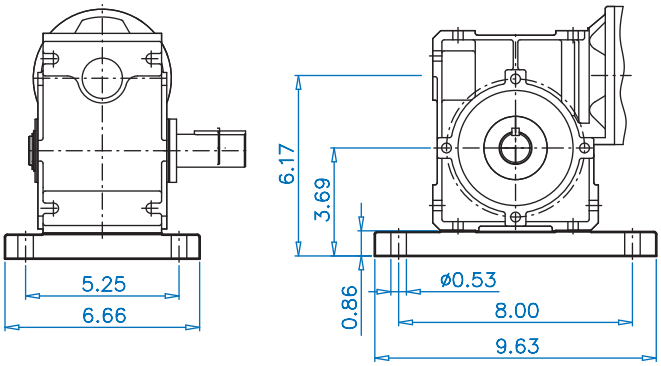

SK 1SI63 VH (Plug-In Shaft, Cover)

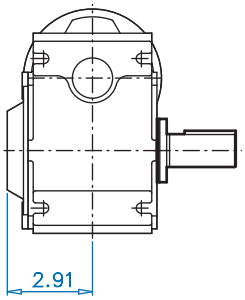

SK 1SI63 L (Double Solid Shaft)

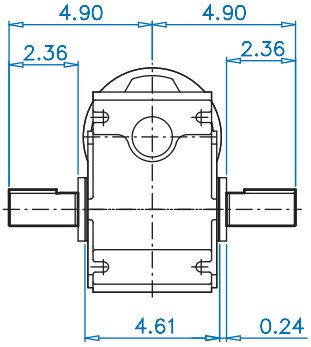

CONFIGURATIONS SEE PAGE 85

G1035 - Subject to Change Without Notice
Send Quote Requests to info@automatedpt.com
Call +1(800)985-6929 To Order or Order Online At Nordgearmotors.com

SK 1SI75

NORD DRIVESYSTEMS

SK 1SI75 + Motor

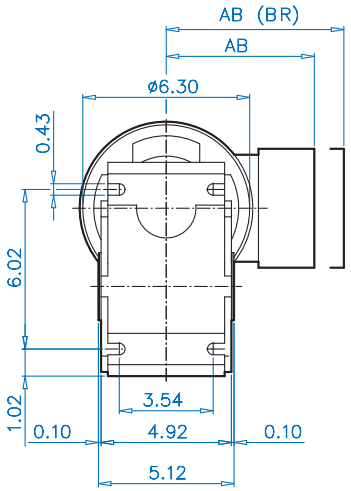

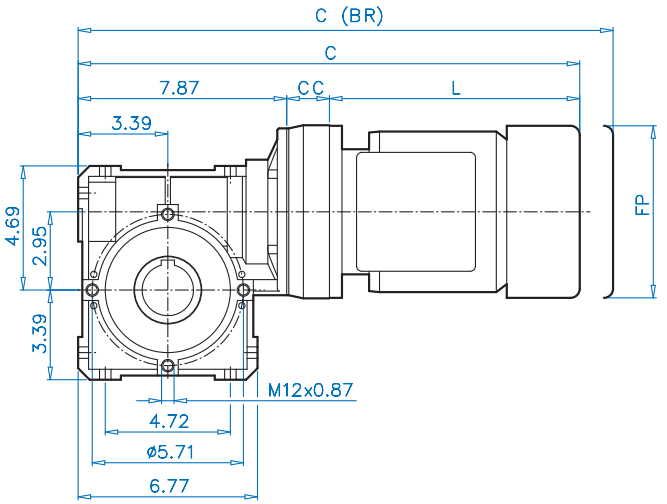

SK 1SI75 A (Hollow Shaft Detail)

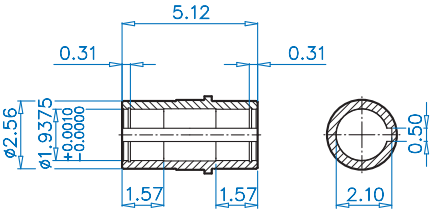

CUSTOMER SUPPLIED KEY 1/2 x 3/8

Motor dimensions

Standard eff.	56C-71S/L	56C-80S/L				
Energy eff.		56C-80LH	140TC-80LH	140TC-90SH/LH	180TC-100LH	180TC-112MH
Premium eff.		56C-80LP	140TC-80LP	140TC-90SP/LP	180TC-100LP	180TC-112MP
AB	4.88	5.59	5.59	5.79	6.65	7.05
AB (BR)	5.24	5.63	5.63	5.83	6.26	6.69
C	17.91	18.94	18.94	20.51	22.08	23.84
C (BR)	20.19	21.46	21.46	23.47	25.66	-
CC	1.61	1.61	1.61	1.61	2.16	2.16
FP	5.71	6.50	6.50	7.20	7.91	8.98
L	8.43	9.45	9.45	11.02	12.05	13.81
L (BR)	10.71	11.97	11.97	13.98	15.63	-

(BR) denotes Brakemotor

SK 1SI75 + NEMA

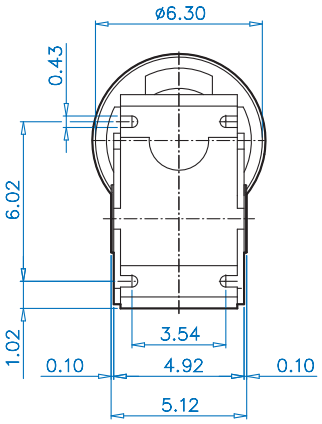

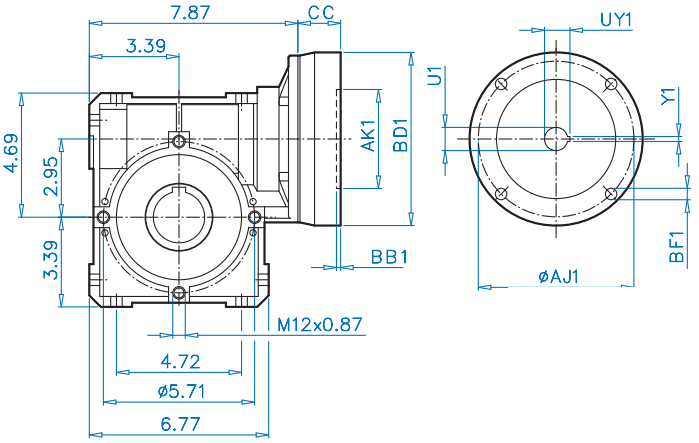

NEMA Dimensions

Type	AJ1	AK1	BB1	BD1	BF1	CC	GA1	U1	UY1	V1	Y1
56C	5.875	4.50	0.16	6.54	0.43	1.61	0.50	0.625	0.71	2.06	0.1875
140TC	5.875	4.50	0.16	6.54	0.43	1.61	0.50	0.875	0.96	2.12	0.1875
180TC	7.25	8.50	0.25	9.17	0.59	2.16	0.63	1.125	1.24	2.62	0.25

CONFIGURATIONS SEE PAGE 87

Send Quote Requests to info@automatedpt.com
Call +1(800)985-6929 To Order or Order Online At Nordgearmotors.com

NORD DRIVESYSTEMS

SK 1SI75 Hollow Shaft Options

SK 1SI75 F (II Flange)

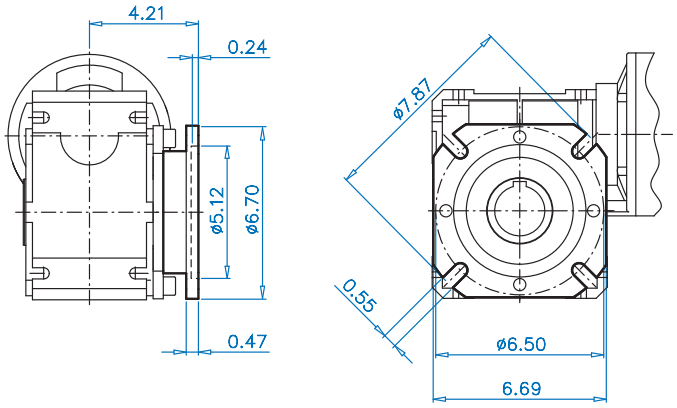

SK 1SI75 H (Cover)

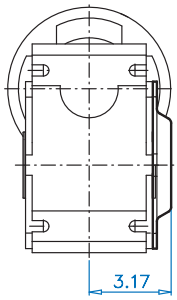

SK 1SI75 D (Torque Arm)

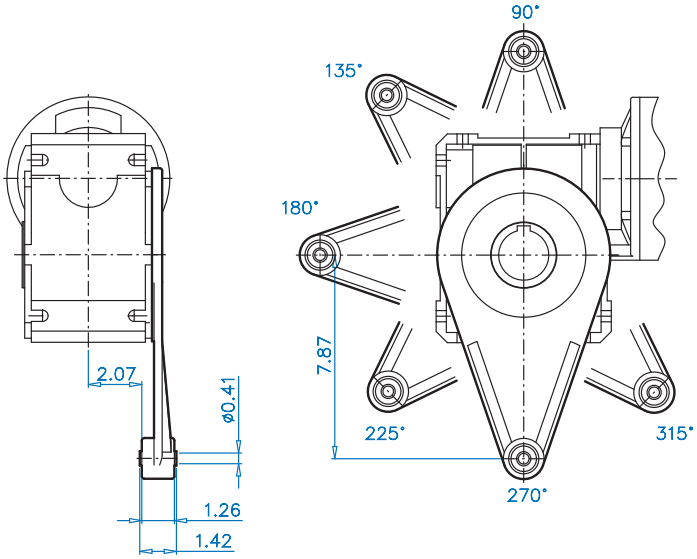

SK 1SI75 J (1.1875" Bushing Kit)

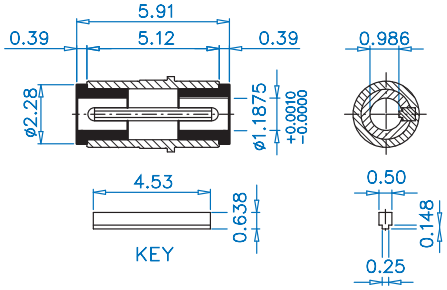

SK 1SI75 J (1.25" Bushing Kit)

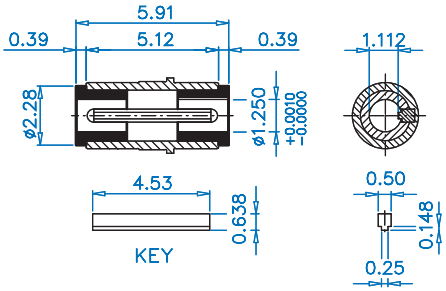

SK 1SMI75 J (1.4375" Bushing Kit)

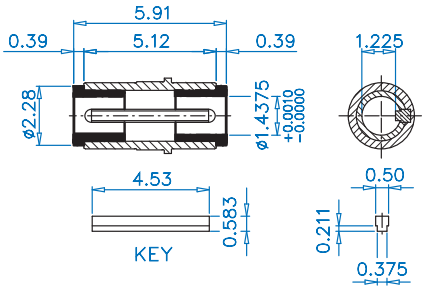

SK 1SI75 J (1.50" Bushing Kit)

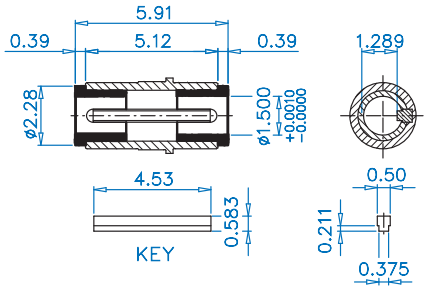

CONFIGURATIONS SEE PAGE 87

Send Quote Requests to info@automatedpt.com
Call +1(800)985-6929 To Order or Order Online At Nordgearmotors.com

SK 1SI75

DRIVESYSTEMS

SK 1SI75 V (Plug-In Shaft) + Motor

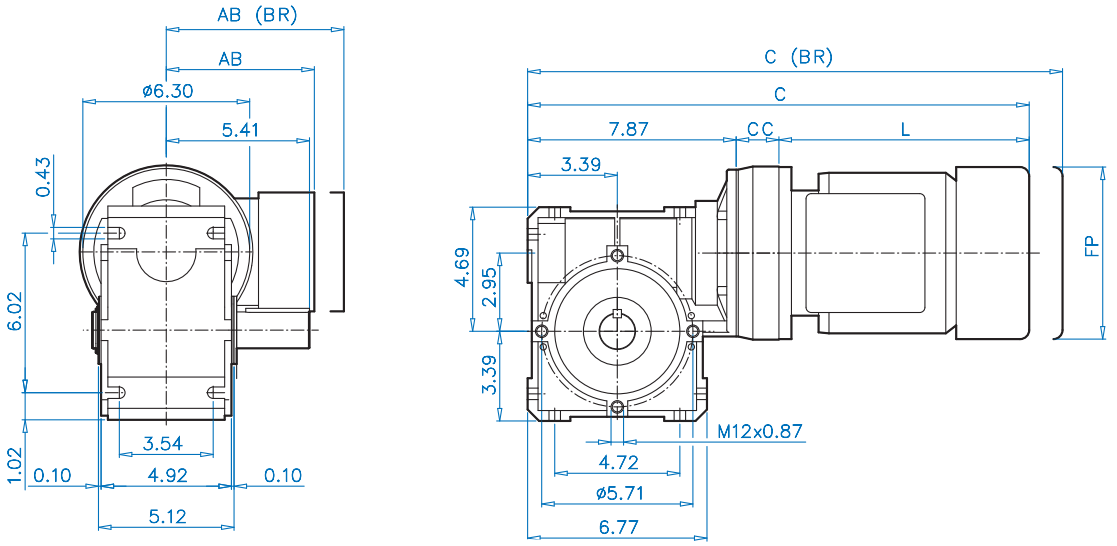

Motor dimensions

Standard eff.	56C-71S/L	56C-80S/L				
Energy eff.		56C-80LH	140TC-80LH	140TC-90SH/LH	180TC-100LH	180TC-112MH
Premium eff.		56C-80LP	140TC-80LP	140TC-90SP/LP	180TC-100LP	180TC-112MP
AB	4.88	5.59	5.59	5.79	6.65	7.05
AB (BR)	5.24	5.63	5.63	5.83	6.26	6.69
C	17.91	18.94	18.94	20.51	22.08	23.84
C (BR)	20.19	21.46	21.46	23.47	25.66	-
CC	1.61	1.61	1.61	1.61	2.16	2.16
FP	5.71	6.50	6.50	7.20	7.91	8.98
L	8.43	9.45	9.45	11.02	12.05	13.81
L (BR)	10.71	11.97	11.97	13.98	15.63	-

(BR) denotes Brakemotor

SK 1SI75 V (Solid Shaft Detail)

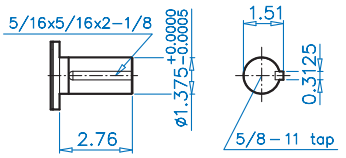

CONFIGURATIONS SEE PAGE 87

SK 1SI75 V (Plug-In Shaft) + NEMA

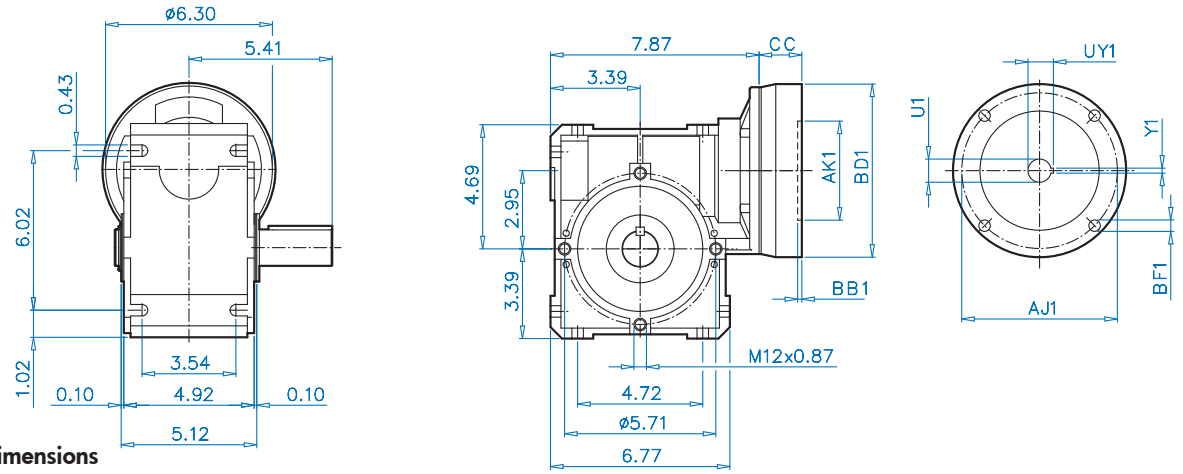

NEMA Dimensions

Type	AJ1	AK1	BB1	BD1	BF1	CC	GA1	U1	UY1	V1	Y1
56C	5.875	4.50	0.16	6.54	0.43	1.61	0.50	0.625	0.71	2.06	0.1875
140TC	5.875	4.50	0.16	6.54	0.43	1.61	0.50	0.875	0.96	2.12	0.1875
180TC	7.25	8.50	0.25	9.17	0.59	2.16	0.63	1.125	1.24	2.62	0.25

Send Quote Requests to info@automatedpt.com
Call +1(800)985-6929 To Order or Order Online At Nordgearmotors.com

Send Quote Requests to info@automatedpt.com
Call +1(800)985-6929 To Order or Order Online At Nordgearmotors.com

SK 1SI75
Solid Shaft Options

SK 1SI75 VF (Plug-in Shaft, II Flange)

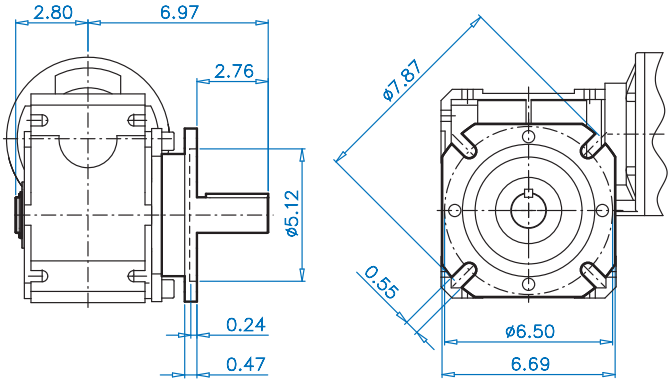

SK 1SI75 L (Double Solid Shaft)

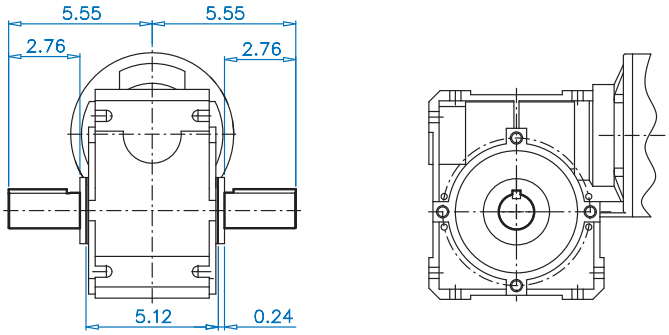

SK 1SI75 VH (Plug-In Shaft, Cover)

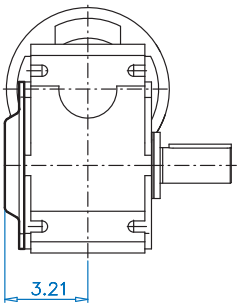

CONFIGURATIONS SEE PAGE 87

Send Quote Requests to info@automatedpt.com
Call +1(800)985-6929 To Order or Order Online At Nordgearmotors.com

Helical Input Stage H10
SK 1SI40 - SK 1SI63 (NEMA)

NORD DRIVESYSTEMS

Helical Input Stage (H10)

The helical input stage has a ratio of 10:1. This input stage can be attached to the wormgear modules SK1SI40, SK1SI50, and SK1SI63. Using the module helical input enables the building of 2-stage helical-worm drives.

Helical-worm gearmotor

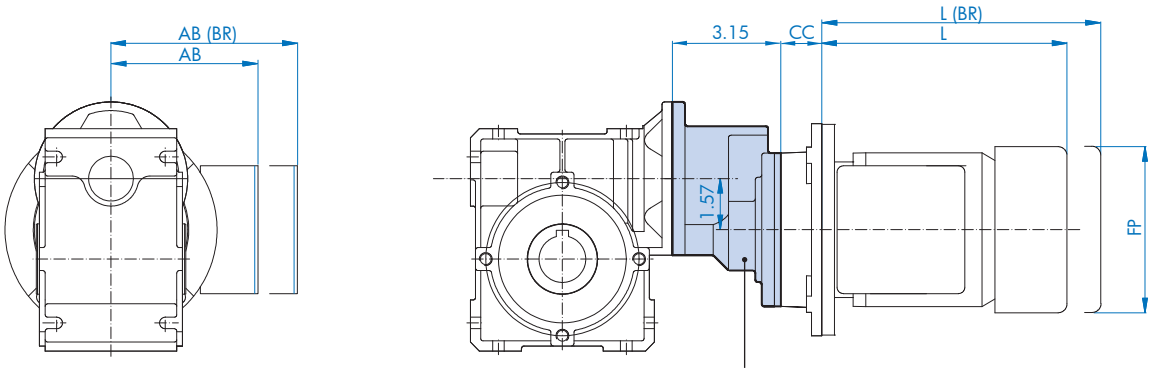

Std. eff.	/H10-56C - 63 S/L	/H10-56C - 71 S/L	/H10-56C - 80 S/L	/H10-140TC - 80 L	/H10-140TC - 90 S/L
Energy eff.			/H10-56C - 80 LH	/H10-140TC - 80 LH	/H10-140TC - 90 SH/LH
Prem. eff.			/H10-56C - 80 LP	/H10-140TC - 80 LP	/H10-140TC - 90 SP/LP
AB	4.53	4.88	5.59	5.59	5.79
AB (BR)	4.84	5.24	5.63	5.63	5.83
CC	1.46	1.46	1.46	1.93	1.93
FP	5.12	5.71	6.50	6.50	7.20
L	7.56	8.43	9.45	9.45	11.02
L (BR)	9.76	10.71	11.97	11.97	13.98

Helical-worm speed reducer with NEMA C-face motor adapter

CONFIGURATIONS SEE PAGE 81 - 85

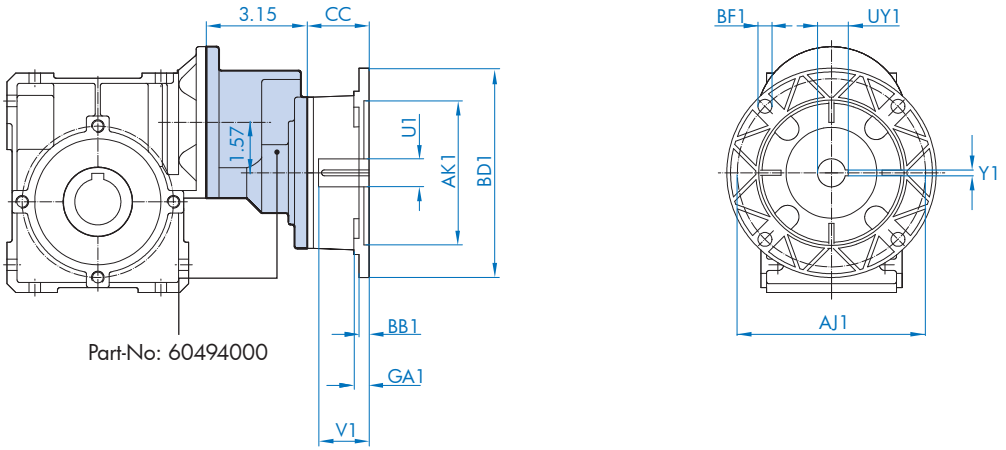

	AJ1	AK1	BB1	BD1	BF1	CC	GA1	U1	UY1	V1	Y1	Part-No
NEMA 56C	5.875	4.50	0.16	6.54	0.43	1.46	0.50	0.625	0.71	2.06	0.1875	60495500
NEMA 140TC	5.875	4.50	0.16	6.54	0.43	1.93	0.50	0.875	0.96	2.12	0.1875	60595500

Send Quote Requests to info@automatedpt.com
Call +1(800)985-6929 To Order or Order Online At Nordgearmotors.com

NORD DRIVESYSTEMS

Helical Input Stage H10
SK 1SI40 - SK 1SI63 (IEC)

Helical Input Stage (H10)

The helical input stage has a ratio of 10:1. This input stage can be attached to the wormgear modules SK1SI40, SK1SI50, and SK1SI63. Using the module helical input enables the building of 2-stage helical-worm drives.

Helical-worm gearmotor

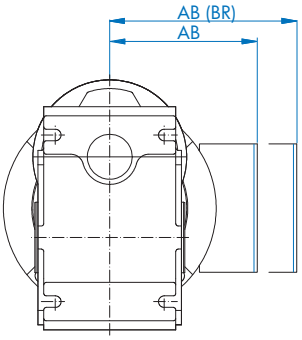

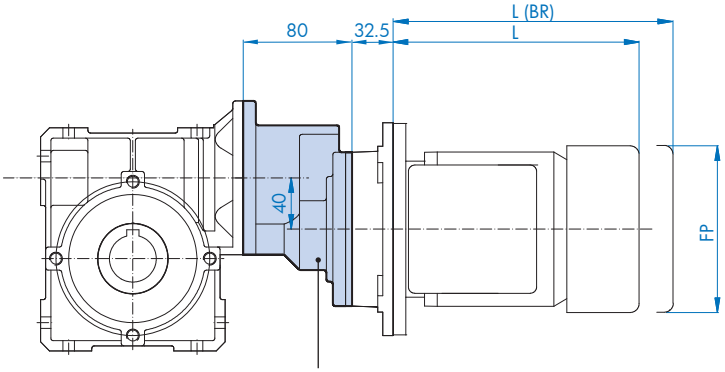

Part-No: 60494000

	/H10-63 S/L	/H10-71 S/L
AB	115	124
AB (BR)	123	133
L	192	214
L (BR)	248	272
FP	130	145

Helical - worm gearbox with IEC motor adapter

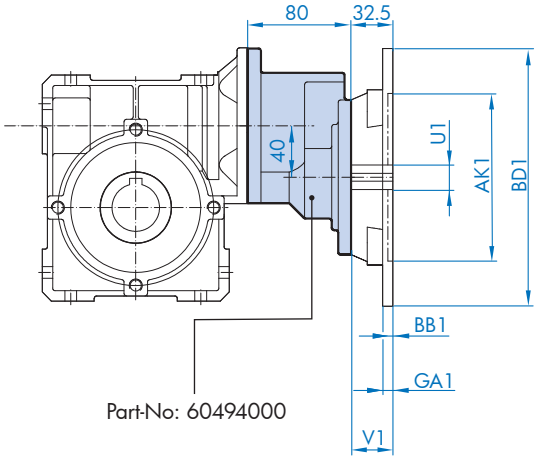

Part-No: 60494000

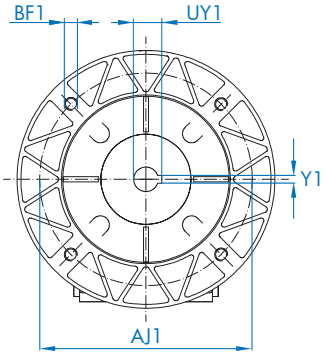

	IEC 56 B14 C105	IEC 56 B5 A120	IEC 63 B14 C90	IEC 63 B14 C120	IEC 63 B5 A140	IEC 71 B14 C105	IEC 71 B14 C140	IEC 71 B5 A160	IEC 80 B14 C120	IEC 80 B14 C160	IEC 80 B5 A200
AJ1	85	100	75	100	115	85	115	130	100	130	165
AK1	70	80	60	80	95	70	95	110	80	110	130
BB1	3	3.5	3	3.5	3.5	3	3.5	4	3.5	4	4
BD1	105	120	90	120	140	105	140	160	120	160	200
BF1	7	7	6	7	9	7	9	9	7	9	M10
GA1	8	8	8	8	8	8	8	8	8	8	20
U1	9	9	11	11	11	14	14	14	19	19	19
UY1	11.4	11.4	12.8	12.8	12.8	16.3	16.3	16.3	21.8	21.8	21.8
V1	20	20	23	23	23	30	30	30	40	40	40
Y1	3	3	4	4	4	5	5	5	6	6	6

CONFIGURATIONS SEE PAGE 81 - 85

Send Quote Requests to info@automatedpt.com
Call +1(800)985-6929 To Order or Order Online At Nordgearmotors.com

Double Worm
SK 1SI40 - SK 1SI75 NEMA

NORD DRIVESYSTEMS

Double Wormgear

The double wormgear is an adapter that enables the fitting of two FLEXBLOC™ worm modules together.

Double-worm gearmotor

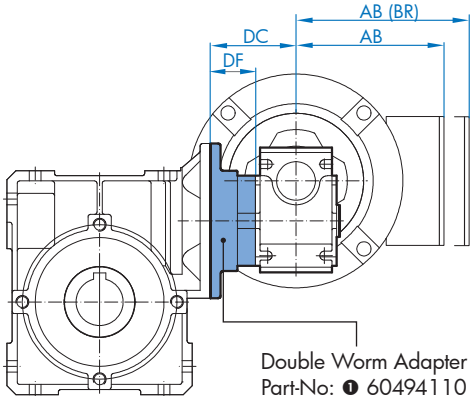

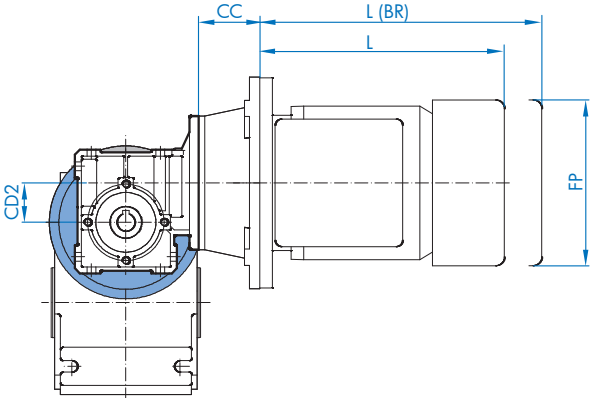

	❶ SK 1SI40/31, SK 1SI50/31, or SK 1SI63/31			❷ SK 1SI75/40				
Standard eff.	-56C-63 S/L	-56C-71 S/L	-56C-80 S/L	-56C-63 S/L	-56C-71 S/L	-56C-80 S/L	-140TC-80 L	-140TC-90 S/L
Energy eff.			-56C-80LH			-56C-80LH	-140TC-80LH	-140TC-90SH/LH
Premium eff.			-56C-80LP			-56C-80LP	-140TC-80LP	-140TC-90SP/LP
AB	4.53	4.88	5.59	4.53	4.88	5.59	5.59	5.79
AB (BR)	4.84	5.24	5.63	4.84	5.24	5.63	5.63	5.83
CC	1.89	1.89	1.89	1.46	1.46	1.46	1.93	1.93
CD2	1.18	1.18	1.18	1.57	1.57	1.57	1.57	1.57
DC	2.62	2.62	2.62	3.05	3.05	3.05	3.05	3.05
DF	1.38	1.38	1.38	1.52	1.52	1.52	1.52	1.52
FP	5.12	5.71	6.50	5.12	5.71	6.50	6.50	7.20
L	7.56	8.43	9.45	7.56	8.43	9.45	9.45	11.02
L (BR)	9.76	10.71	11.97	9.76	10.71	11.97	11.97	13.98

Double-worm speed reducer with NEMA C-face motor adapter

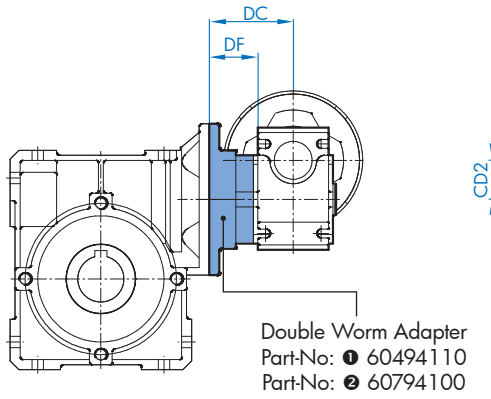

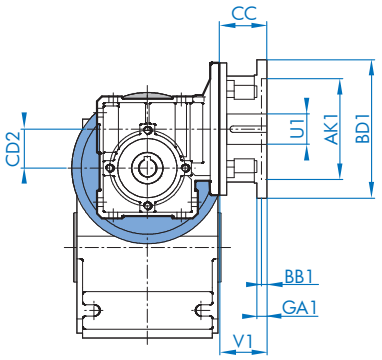

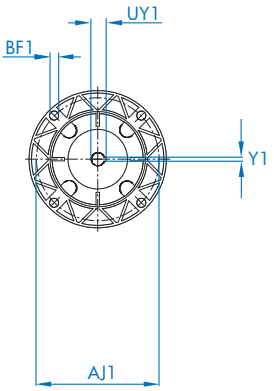

CONFIGURATIONS SEE PAGE 81 - 87

SK ... /31 ❶	AJ1	AK1	BB1	BD1	BF1	CC	CD2	DC	DF	GA1	U1	UY1	V1	Y1	Part-No
NEMA 48C	3.75	3.00	0.16	4.33	0.29	1.50	1.18	2.62	1.38	0.25	0.500	flat	1.69	flat	60395500
NEMA 56C	5.875	4.50	0.16	6.54	0.43	1.89	1.18	2.62	1.38	0.50	0.625	0.71	2.06	0.1875	60395510

SK 1SI75/40 ❷	AJ1	AK1	BB1	BD1	BF1	CC	CD2	DC	DF	GA1	U1	UY1	V1	Y1	Part-No
NEMA 56C	5.875	4.50	0.16	6.54	0.43	1.46	1.57	3.05	1.52	0.50	0.625	0.71	2.06	0.1875	60495500
NEMA 140TC	5.875	4.50	0.16	6.54	0.43	1.93	1.57	3.05	1.52	0.50	0.875	0.96	2.12	0.18	60595500

Send Quote Requests to info@automatedpt.com
Call +1(800)985-6929 To Order or Order Online At Nordgearmotors.com

NORD DRIVESYSTEMS

Double Worm
SK 1SI40 - SK 1SI75 IEC

Double Wormgear

The double wormgear is an adapter that enables the fitting of two worm modules together.

Double-worm gearmotor

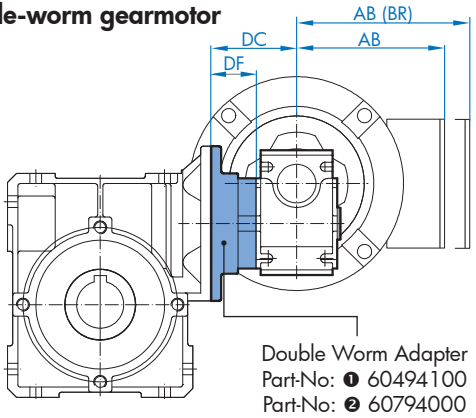

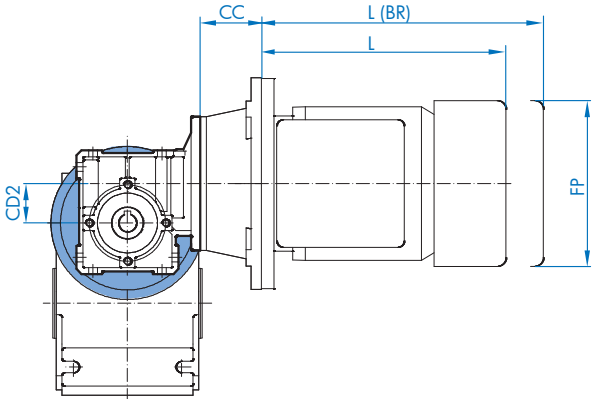

	SK ... /31 ❶		SK 1SI75/40 ❷		
Standard eff.	63 S/L	71 S/L	63 S/L	71 S/L	80 S/L
Energy eff.					80 SH/LH
Premium eff.					80 SP/LP
AB	115	124	115	124	142
AB (BR)	123	133	123	133	143
L	192	214	192	214	236
L (BR)	248	272	248	272	300
FP	130	145	130	145	165

	Double Worm Kit	
	SK ... /31 ❶	SK 1SI75/40 ❷
CD2	31	40
DC	66.5	77.5
DF	35	38.5
Part-No:	60494100	60794000

Double-worm speed reducer with IEC motor adapter

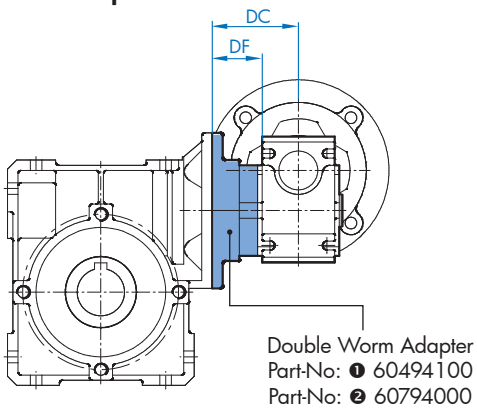

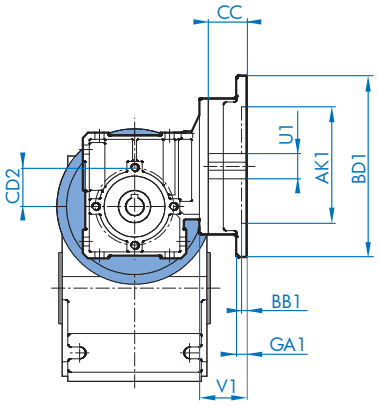

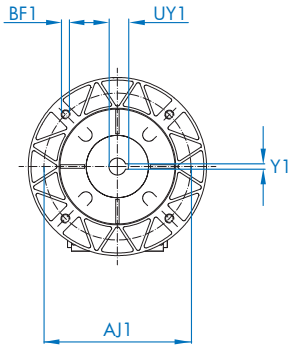

	SK ... /31 ❶					SK1SI75/40 ❷									
	IEC 63 B14 C90	IEC 63 B14 C120	IEC 63 B5 A140	IEC 71 B14 C105	IEC 71 B14 C140	IEC 63 B14 C120	IEC 63 B5 A140	IEC 71 B14 C105	IEC 71 B14 C140	IEC 71 B5 A160	IEC 80 B14 C120	IEC 80 B14 C160	IEC 80 B5 A200	IEC 90 B14 C140	IEC 90 B14 C160
AJ1	75	100	115	85	115	100	115	85	115	130	100	130	165	115	130
AK1	60	80	95	70	95	80	95	70	95	110	80	110	130	95	110
BB1	3	3.5	3.5	3	3.5	3.5	3.5	3	3.5	4	3.5	4	4	3.5	4
BD1	90	120	140	105	140	120	140	105	140	160	120	160	200	140	160
BF1	6	7	9	7	9	7	9	7	9	9	7	9	M10	9	9
CD2	31	31	31	31	31	40	40	40	40	40	40	40	40	40	40
DC	66.5	66.5	66.5	66.5	66.5	77.5	77.5	77.5	77.5	77.5	77.5	77.5	77.5	77.5	77.5
DF	35	35	35	35	35	38.5	38.5	38.5	38.5	38.5	38.5	38.5	38.5	38.5	38.5
GA1	8	8	8	8	8	8	8	8	8	8	8	8	20	8	8
U1	11	11	11	14	14	11	11	14	14	14	19	19	19	24	24
UY1	12.8	12.8	12.8	16.3	16.3	12.8	12.8	16.3	16.3	16.3	21.8	21.8	21.8	27.3	27.3
V1	23	23	23	30	30	23	23	30	30	30	40	40	40	50	50
Y1	4	4	4	5	5	4	4	5	5	5	6	6	6	8	8

CONFIGURATIONS SEE PAGE 81 - 87

Send Quote Requests to info@automatedpt.com
Call +1(800)985-6929 To Order or Order Online At Nordgearmotors.com

IEC Adapters
SK 1SI31 - SK 1SI75

NORD DRIVESYSTEMS

IEC Adapters

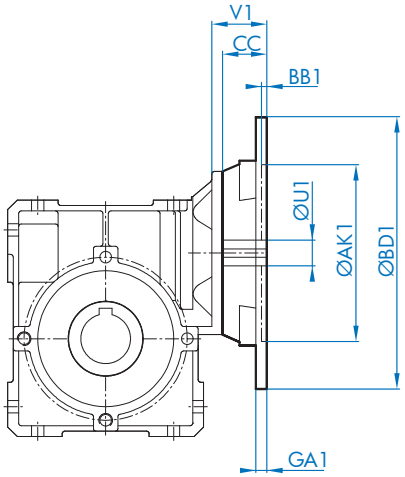

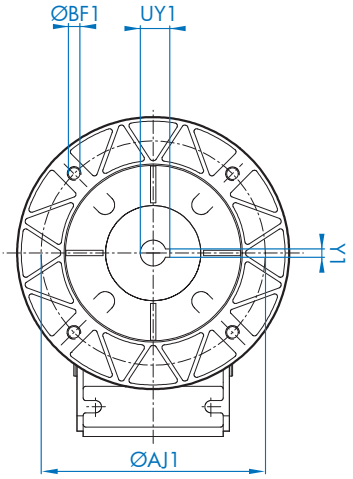

Dimensions in (mm)

	AJ1	AK1	BB1	BD1	BF1	GA1	U1	UY1	V1	Y1	CC SI 31	CC SI 40	CC SI 50	CC SI 63	CC SI 75	CC H10
IEC 56 B14 C105	85	70	3	105	7	8	9	11.4	20	3	29.5	32.5	32.5	32.5	-	32.5
IEC 56 B5 A120	100	80	3.5	120	7	8	9	11.4	20	3	29.5	32.5	32.5	32.5	-	32.5
IEC 63 B14 C90 *	75	60	3	90	6	8	11	12.8	23	4	29.5	32.5	32.5	32.5	-	32.5
IEC 63 B14 C120	100	80	3.5	120	7	8	11	12.8	23	4	29.5	32.5	32.5	32.5	-	32.5
IEC 63 B5 A140	115	95	3.5	140	9	8	11	12.8	23	4	29.5	32.5	32.5	32.5	-	32.5
IEC 71 B14 C105 *	85	70	3	105	7	8	14	16.3	30	5	29.5	32.5	32.5	32.5	36	32.5
IEC 71 B14 C140	115	95	3.5	140	9	8	14	16.3	30	5	29.5	32.5	32.5	32.5	36	32.5
IEC 71 B5 A160	130	110	4	160	9	8	14	16.3	30	5	-	32.5	32.5	32.5	36	32.5
IEC 80 B14 C120 *	100	80	3.5	120	7	8	19	21.8	40	6	-	32.5	32.5	32.5	36	32.5
IEC 80 B14 C160	130	110	4	160	9	8	19	21.8	40	6	-	32.5	32.5	32.5	36	32.5
IEC 80 B5 A200	165	130	4	200	M10	10	19	21.8	40	6	-	32.5	32.5	32.5	36	32.5
IEC 90 B14 C140 *	115	95	3.5	140	9	8	24	27.3	50	8	-	32.5	32.5	32.5	36	-
IEC 90 B14 C160	130	110	4	160	9	8	24	27.3	50	8	-	45.5	45.5	32.5	36	-
IEC 90 B5 A200	165	130	4	200	M10	10	24	27.3	50	8	-	45.5	45.5	32.5	36	-
IEC 100 B14 C160	130	110	4	160	9		28	31.3	60	8	-	-	-	-	36	-
IEC 100 B14 C200	165	130	4	200	11		28	31.3	60	8	-	-	-	-	36	-
IEC 100 B5 A250 *	215	165	5	250	M12	12	28	31.3	60	8	-	-	-	-	36	-
IEC 112 B14 C160	130	110	5	160	9		28	31.3	60	8	-	-	-	-	36	-
IEC 112 B14 C200	165	130	5	200	11		28	31.3	60	8	-	-	-	-	36	-
IEC 112 B5 A250 *	215	165	5	250	M12	12	28	31.3	60	8	-	-	-	-	36	-

	Kit Part Numbers					
IEC Inputs	SK 1SI31	SK1SI40	SK1SI50	SK1SI63	SK1SI75	SK...H10
IEC 56 B14 C105	60395100	60495100	60495100	60495100	–	60495100
IEC 56 B5 A120	60395200	60495200	60495200	60495200	–	60495200
IEC 63 B14 C90 *	60395010 *	60495010 *	60495010 *	60495010 *	–	60495010 *
IEC 63 B14 C120	60395110	60495110	60495110	60495110	–	60495110
IEC 63 B5 A140	60395210	60495210	60495210	60495210	–	60495210
IEC 71 B14 C105 *	60395020 *	60495020 *	60495020 *	60495020 *	–	60495020 *
IEC 71 B14 C140	60395120	60495120	60495120	60495120	60795120	60495120
IEC 71 B5 A160	–	60495220	60495220	60495220	60795220	60495220
IEC 80 B14 C120 *	–	60495030 *	60495030 *	60495030 *	–	60495030 *
IEC 80 B14 C160	–	60495130	60495130	60495130	60795130	60495130
IEC 80 B5 A200	–	60495230	60495230	60495230	60795230	60495230
IEC 90 B14 C140 *	–	60495040 *	60495040 *	60695040 *	60795040 *	–
IEC 90 B14 C160	–	60495140	60495140	60695140	60795140	–
IEC 90 B5 A200	–	60459240	60459240	60695240	60795240	–
IEC 100 B14 C160	–	–	–	–	60795050	–
IEC 100 B14 C200	–	–	–	–	60795150	–
IEC 100 B5 A250 *	–	–	–	–	60795250 *	–
IEC 112 B14 C160	–	–	–	–	60795050	–
IEC 112 B14 C200	–	–	–	–	60795150	–
IEC 112 B5 A250 *	–	–	–	–	60795250 *	–

* Standard for use with NORD motor

CONFIGURATIONS SEE PAGE 79 - 87

Send Quote Requests to info@automatedpt.com
Call +1(800)985-6929 To Order or Order Online At Nordgearmotors.com

DRIVESYSTEMS

Solid Input Shaft - W
SK 1SI40 - SK 1SI75

Solid Input Shaft Module INCH

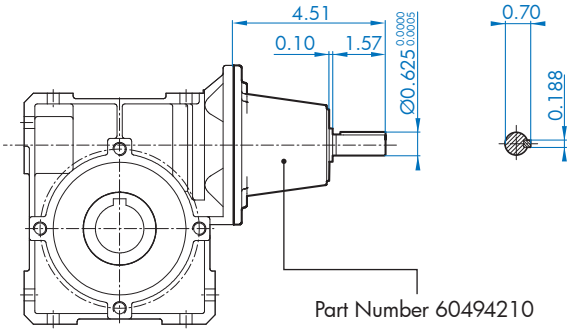

SK1SI40-SK1SI63

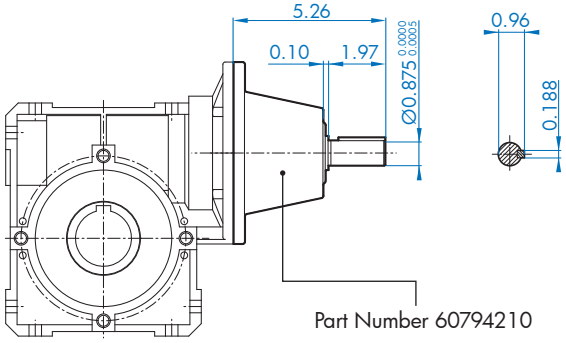

SK1SI75

Solid Input Shaft Module METRIC

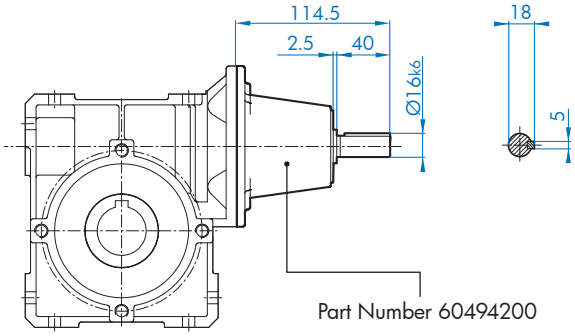

SK1SI40-SK1SI63

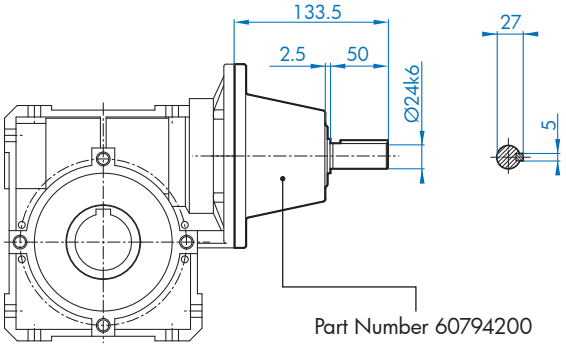

SK1SI75

CONFIGURATIONS SEE PAGE 81 - 87

Send Quote Requests to info@automatedpt.com
Call +1(800)985-6929 To Order or Order Online At Nordgearmotors.com

Hollow Shaft Detail
SK 1SI31 - SK 1SI75

DRIVESYSTEMS

DIMENSIONS

Dimensions in Inches

Hollow Shaft Dimensions

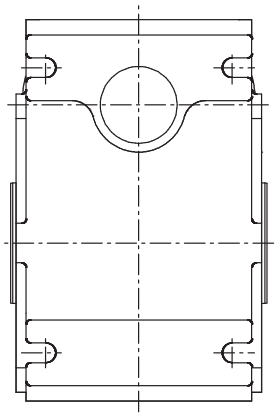

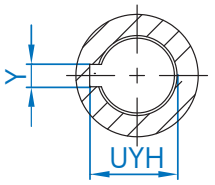

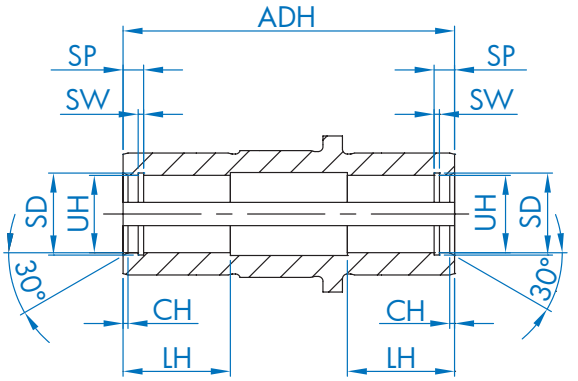

Inch	UH		ADH	CH	LH	SP	SW	SD	UYH	Y	Customer Supplied Key
SK 1SI31	0.625	+ 0.0010 - 0.0000	2.68	0.039	0.87	0.165	0.043	0.661	0.709	0.187	3/16 x 3/16
SK 1SI40 SK 1SI40/31 SK 1SI40/H10	1.000	+ 0.0010 - 0.0000	3.27	0.039	1.18	0.224	0.063	1.047	1.114	0.250	1/4 x 1/4
SK 1SI50 SK 1SI50/31 SK 1SI40/H10	1.125	+ 0.0010 - 0.0000	3.82	0.039	1.18	0.224	0.063	1.181	1.241	0.250	1/4 x 1/4
SK 1SI63 SK 1SI63/31 SK 1SI63/H10	1.4375	+ 0.0010 - 0.0000	4.61	0.039	1.38	0.264	0.073	1.516	1.605	0.375	3/8 x 3/8
SK 1SI75 SK 1SI75/40	1.9375	+ 0.0012 - 0.0000	5.12	0.059	1.57	0.315	0.085	2.036	2.097	0.500	1/2 x 3/8

Metric	UH		ADH	CH	LH	SP	SW	SD	UYH	Y	Customer Supplied Key
SK 1SI31	14	+ 0.018 - 0.000	68	1	22	4.2	1.1	14.6	16.3	5	5 x 5
SK 1SI40 SK 1SI40/31 SK 1SI40/H10	18	+ 0.018 - 0.000	83	1	30	5.7	1.6	19.0	20.8	6	6 x 6
SK 1SI50 SK 1SI50/31 SK 1SI40/H10	25	+ 0.021 - 0.000	97	1	30	5.7	1.6	26.2	28.3	8	8 x 7
SK 1SI63 SK 1SI63/31 SK 1SI63/H10	25	+ 0.021 - 0.000	117	1	35	6.7	1.6	26.2	28.3	8	8 x 7
SK 1SI75 SK 1SI75/40	35	+ 0.025 - 0.000	130	1.5	40	8.0	1.6	37.0	38.3	10	10 x 8

Send Quote Requests to info@automatedpt.com
Call +1(800)985-6929 To Order or Order Online At Nordgearmotors.com

NORD DRIVESYSTEMS

Hollow Shaft Bushing Kit (J)

Inch Hollow Shaft Bushing Kit

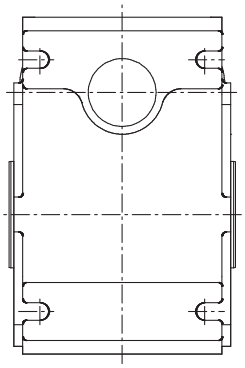

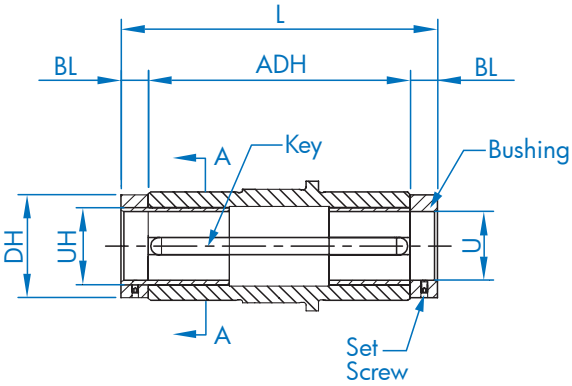

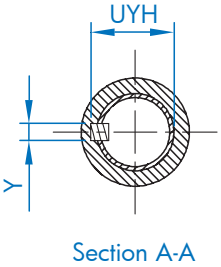

Customer Solid Shaft

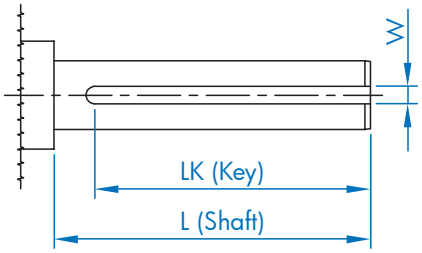

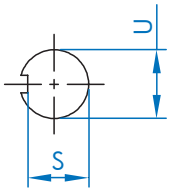

Type	Hollow shaft				Bushing Kit				Customer Solid Shaft					Bushing
	UH	ADH	UYH	Y	BL	DH	U	KEY	L	U	S	W	LK	KIT P/N
SK 1SI50 SK 1SI50/31	1.125	3.82	1.241	0.25	0.39	1.50	1.000	0.25x0.3125x3.43	4.61	1.000	0.859	0.25	4.05	60593400
SK 1SI63 SK 1SI63/31 SK 1SI63/H10	1.4375	4.61	1.605	0.375	0.39	1.73	1.000	0.25x0.375x0.522x4.13	5.39	1.000	0.859	0.25	4.77	60693400
SK 1SI63 SK 1SI63/31 SK 1SI63/H10	1.4375	4.61	1.605	0.375	0.39	1.73	1.250	0.25x0.375x0.394x4.13	5.39	1.250	1.112	0.25	4.77	60693420
SK 1SI75 SK 1SI75/40	1.9375	5.12	2.160	0.500	0.39	2.28	1.250	0.25x0.5x0.638x4.53	5.91	1.250	1.112	0.25	5.22	60793400
SK 1SI75 SK 1SI75/40	1.9375	5.12	2.160	0.500	0.39	2.28	1.4375	0.375x0.5x0.583x4.53	5.91	1.4375	1.225	0.375	5.22	60793420
SK 1SI75 SK 1SI75/40	1.9375	5.12	2.160	0.500	0.39	2.28	1.500	0.375x0.5x0.583x4.53	5.91	1.500	1.289	0.375	5.22	60793410

Send Quote Requests to info@automatedpt.com
Call +1(800)985-6929 To Order or Order Online At Nordgearmotors.com

Send Quote Requests to info@automatedpt.com Call +1(800)985-6929 To Order or Order Online At Nordgearmotors.com

FLEXBLOC™ Plug-In Solid Shaft Dimensions (V)

DRIVESYSTEMS

Plug-In Solid Shaft Dimensions

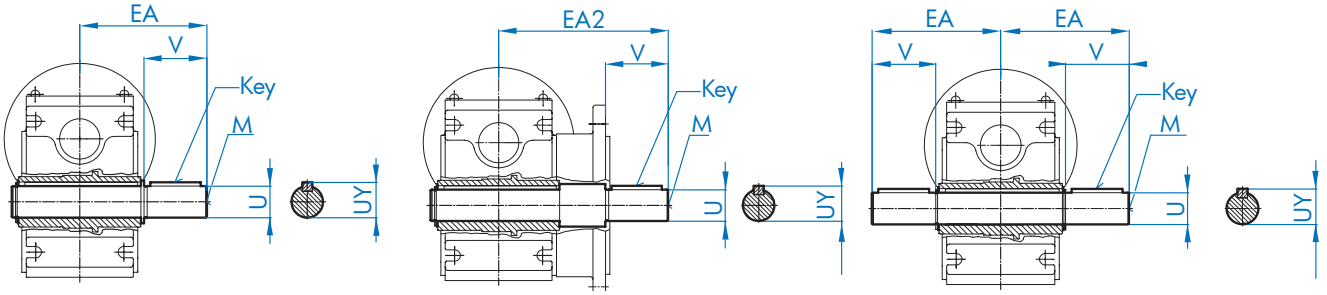

Inch	U		V	EA	EA2	UY	M	Key
SK 1SI31	0.625	+ 0.0000 - 0.0005	1.57	3.02	4.13	0.70	1/4-20 x 0.59	3/16 x 3/16 x 1-1/4
SK 1SI40 SK 1SI40/31 SK 1SI40/H10	0.750	+ 0.0000 - 0.0005	1.57	3.39	4.52	0.83	1/4-20 x 0.59	3/16 x 3/16 x 1-1/4
SK 1SI50 SK 1SI50/31 SK 1SI40/H10	1.000	+ 0.0000 - 0.0005	1.97	4.07	5.32	1.11	3/8-16 x 0.87	1/4 x 1/4 x 1-5/8
SK 1SI63 SK 1SI63/31 SK 1SI63/H10	1.125	+ 0.0000 - 0.0005	2.36	4.90	6.06	1.24	1/2-13 x 1.10	1/4 x 1/4 x 2
SK 1SI75 SK 1SI75/40	1.375	+ 0.0000 - 0.0005	2.75	5.41	6.96	1.51	5/8 -11 x 1.42	5/16 x 5/16 x 2-1/8

Metric	U		V	EA	EA2	UY	M	Key
SK 1SI31	14	+ 0.012 + 0.001	30	66.5	95	16	M5 x 12.5 mm	5 x 5 x 25
SK 1SI40 SK 1SI40/31 SK 1SI40/H10	18	+ 0.012 + 0.001	40	84	115	20.5	M6 x 16 mm	6 x 6 x 32
SK 1SI50 SK 1SI50/31 SK 1SI40/H10	25	+ 0.018 + 0.002	50	101	135	28	M10 x 22 mm	8 x 7 x 40
SK 1SI63 SK 1SI63/31 SK 1SI63/H10	25	+ 0.018 + 0.002	50	111	144	28	M10 x 22 mm	8 x 7 x 40
SK 1SI75 SK 1SI75/40	35	+ 0.018 + 0.002	70	137.5	177	38	M12 x 28 mm	10 x 8 x 50

Send Quote Requests to info@automatedpt.com
Call +1(800)985-6929 To Order or Order Online At Nordgearmotors.com

NORD DRIVESYSTEMS

Fixing Element Kit (B)

Fixing Element Kit

Not available in combination with H (shaft cover) option

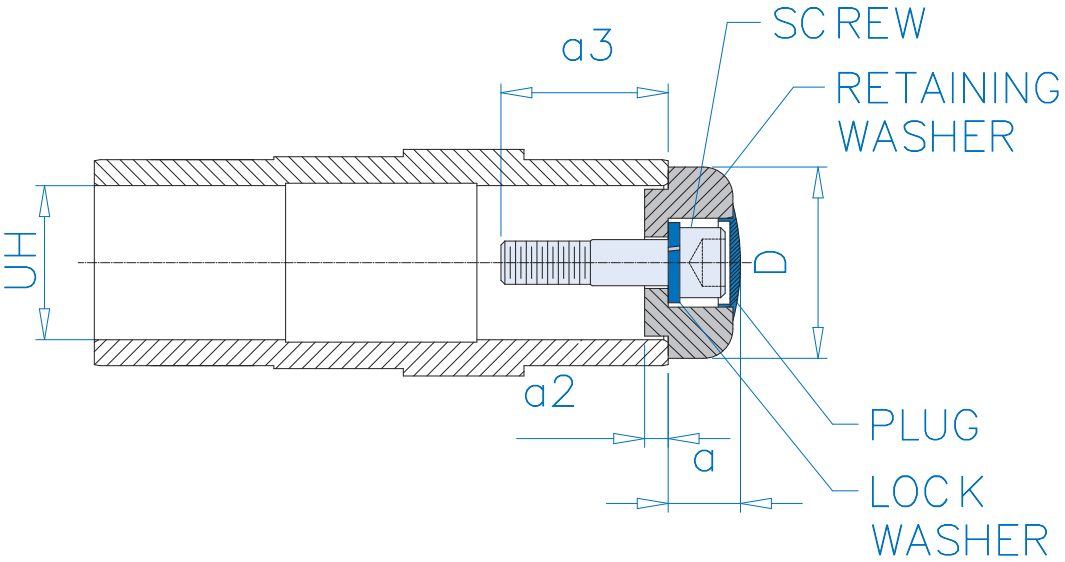

UH	D	a	a2	Screw ❶	a3 ❶	Screw ❷	a3 ❷	Screw ❸	a3 ❸
0.500	0.984	0.563	0.110	10 - 32 x 0.625	0.452	-	-	-	-
0.625	0.984	0.563	0.110	10 - 32 x 0.625	0.452	-	-	-	-
0.750	1.181	0.551	0.118	1/4 - 20 x 3/4	0.629	1/4 - 20 x 1	0.879	-	-
1.000	1.496	0.756	0.150	3/8 - 16 x 3/4	0.530	3/8 - 16 x 1-1/4	1.030	-	-
1.125	1.496	0.756	0.150	3/8 - 16 x 3/4	0.530	3/8 - 16 x 1-1/4	1.030	-	-
1.1875	1.575	0.756	0.150	7/16 - 14 x 2-1/16	1.906	-	-	-	-
1.250	1.575	0.756	0.150	7/16 - 14 x 2-1/16	1.906	-	-	-	-
1.4375	1.772	0.906	0.197	5/8 - 11 x 1-1/2	1.303	5/8 - 11 - 2-1/4	2.053	5/8 - 11 x 1	0.803
1.9375	2.362	0.966	0.315	5/8 - 11 x 2-1/4	2.250	-	-	-	-

UH	D	a	a2	Screw ❶	a3 ❶	Screw ❷	a3 ❷	-	-
16	25	14.3	2.8	M5 x 20	15.6	-	-	-	-
20	30	14	3	M6 x 30	26.9	M6 x 22	18.9	-	-
25	38	19.2	3.8	M10 x 45	39.6	M10 x 30	24.6	-	-
30	40	16.28	5	M10 x 45	42.8	M10 x 30	27.8	-	-
35	45	23.5	3.8	M12 x 55	54	M12 x 35	34	-	-

❶, ❷, ❸ - Each fixing element kit may contain up to 3 different kinds of screws

Send Quote Requests to info@automatedpt.com
Call +1(800)985-6929 To Order or Order Online At Nordgearmotors.com

Send Quote Requests to info@automatedpt.com
Call +1(800)985-6929 To Order or Order Online At Nordgearmotors.com

Notes

NORD DRIVESYSTEMS

NOTES

C1035 - Subject to Change Without Notice
Send Quote Requests to info@automatedpt.com
Call +1(800)985-6929 To Order or Order Online At Nordgearmotors.com

MINICASE® Ratings

Selection

- Order Form
- Unit Examples
- Motorized C-Face Reducers
- Ratings
- Reducer Selection

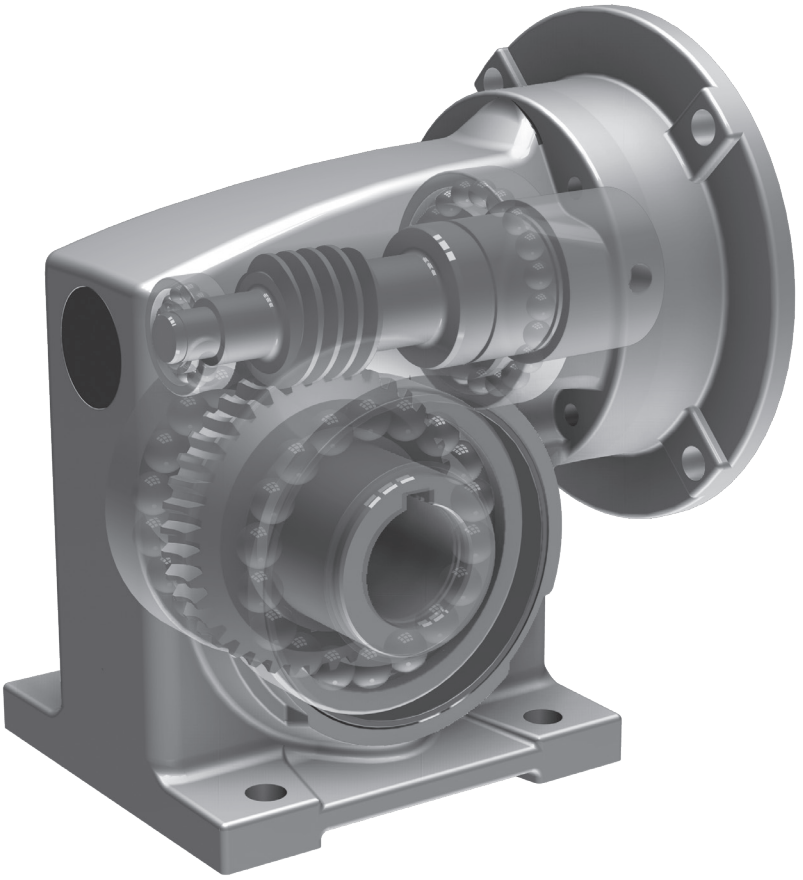

NORD® DRIVESYSTEMS

www.nord.com

UNICASE™

MINICASE® Ordering Guide

	Gear Unit	Flexbloc Size	
SK	1SMI		

Minicase Design	Minicase Size	
	❍ 31	❒ V -
	❍ 40	❍ VA
	❍ 50	❒ L -
	❍ 63	❒ F -
	❍ 75	❍ FA

SK 1SMID50VX - 80 S/4
Minicase Worm Unit
Solid Shaft Side A,
Foot Mounted
One Stage

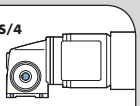

SK 1SMID50VF - 80 S/4
Minicase Worm Unit
Solid Shaft Side A,
B5 Flange Side A,
One Stage

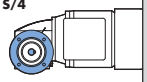

SK 1SMID50VZ - 80 S/4
Minicase Worm Unit
Solid Shaft Side A,

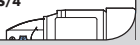

Motor Power P_n [hp]	Output Speed n_2 [rpm]	Output Torque T_a [lb-in]	Service Factor f_B	AGMA Class	Gear Ratio i_{tot}	F_a O [lb
1.0	18	2786	3.3	III	94.19	30
	13	3320	3.3	III	129.00	33
	10	4069	2.9	III	165.50	36
	9.0	4441	2.7	III	183.50	36
	6.8	5567	2.3	III	241.50	36
	3.2	10580	1.2	I	510.00	32
	2.6	12885	1.0	I	645.00	28
	6.4	7027	1.9	II	257.63	36
	5.5	6669	2.0	III	299.28	36
	4.5	7854	1.7	II	365.07	36
	3.5	9716	1.4	II	468.37	34
	3.2	10574	1.3	I	519.31	32
	2.5	13197	1.1	I	660.60	27
	6.1	7565	3.3	III	269.76	

MINICASE®
Ordering Guide

NORD DRIVESYSTEMS

	Gear Unit	MINICASE® Size	Reducer Options		Input	Motor	Motor Options
SK				-			

see pages 222 - 233

MINICASE® Design
1SMI
1SMID
2SMID

MINICASE® Size
❍ 31
❍ 40
❍ 40/31
❍ 50
❍ 50/31
❍ 63
❍ 63/31
❍ 75
❍ 75/40

Shafts
❍ Inch
❍ Metric

Reducer Options
❒ **A -** Hollow Output Shaft 📖 30
❒ **V -** Solid Output Shaft 📖 30
❍ VA ❍ VB ❍ Unassembled
❒ **L -** Double Solid Shaft Extension 📖 31
❒ **X -** Footed Housing 📖 31
❒ **Z -** B14 Flanged Housing 📖 31
❒ **F -** B5 Output Flange 📖 31
❍ FA ❍ FB ❍ FF ❍ Unassembled
❒ **D -** Torque Arm 📖 31
❍ DA ❍ DB ❍ Unassembled
❒ **H -** Shaft Cover 📖 30
❍ HA ❍ HB ❍ Unassembled
❒ **B -** Fixing Kit
❒ **J -** Shaft Bushing _____ size 📖 31
❒ **H10 -** Helical Input Stage 📖 33

Input Shaft	NEMA Adapter	IEC
W	**N48C** **N56C** **N140TC** **N180TC**	**IEC 63** **IEC 71** **IEC 80** **IEC 90** **IEC 100** **IEC 112**

Motors	Premium Efficient
63S/4 - 0.16hp **63L/4** - 0.25hp **71S/4** - 0.33hp **71L/4** - 0.50hp **80S/4** - 0.75hp	**80LP/4** - 1hp **90SP/4** - 1.5hp **90LP/4** - 2hp **100LP/4** - 3hp **112MP/4** - 5hp
Other Pole & Speeds Available	

Product Specifications

Mounting Position

- ❍ M1
- ❍ M2
- ❍ M3
- ❍ M4
- ❍ M5
- ❍ M6
- ❍ Special _____

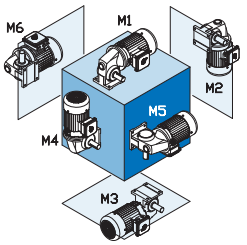

Paint

- ❍ No Paint (Standard)
- ❍ Stainless Steel Paint
- ❍ NSD+ (gray)
- ❍ NSD+W (white)
- ❍ NSD-X3 (gray)
- ❍ NSD^{tuph}
- ❍ Special _____

Single Worm Ratio	Helical Worm (2SMID)	Helical Worm (1SMI_/H10) Ratio	Helical Worm (1SMI_/H10) Position	Double Worm (1SMIxx/xx) Ratio	Double Worm (1SMIxx/xx) Position
❍ 5	❍ 25	❍ 50	❍ T1	❍ 150	❍ U1
❍ 7.5	❍ 37.5	❍ 75	❍ T2	❍ 225	❍ U2
❍ 10	❍ 50	❍ 100	❍ T3	❍ 300	❍ U3
❍ 12.5	❍ 62.5	❍ 125	❍ T4	❍ 375	❍ U4
❍ 15	❍ 75	❍ 150		❍ 450	❍ U5
❍ 20	❍ 100	❍ 200		❍ 600	❍ U6
❍ 25	❍ 125	❍ 250		❍ 750	❍ U7
❍ 30	❍ 150	❍ 300		❍ 900	❍ U8
❍ 40	❍ 200	❍ 400		❍ 1200	
❍ 50	❍ 250	❍ 500		❍ 1500	
❍ 60	❍ 300	❍ 600		❍ 1800	
❍ 80	❍ 400	❍ 800		❍ 2400	
❍ 100	❍ 500	❍ 1000		❍ 3000	

Torque Arm Orientation (If Selected)

- ❍ 90°
- ❍ 135°
- ❍ 180°
- ❍ 225°
- ❍ 270°
- ❍ 315°
- ❍ Other

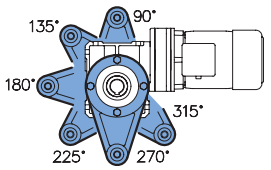

Torque Arm Orientation (If Selected)

- ❍ Side A
- ❍ Side B

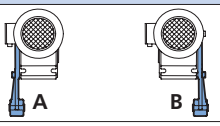

Gearmotor Only Details

Voltage & Frequency

- ❍ 230/460V-60Hz
- ❍ 575V-60Hz
- ❍ 400V-50Hz
- ❍ Other _____

Terminal Box Position

- ❍ KK1
- ❍ KK2
- ❍ KK3
- ❍ KK4

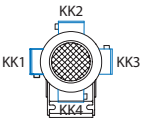

Conduit Entry Location

- ❍ I *
- ❍ II
- ❍ III *
- ❍ IV

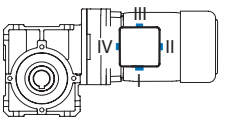

* Brakemotor options

Send Quote Requests to info@automatedpt.com
Call +1(800)985-6929 To Order or Order Online At Nordgearmotors.com

Send Quote Requests to info@automatedpt.com
Call +1(800)985-6929 To Order or Order Online At Nordgearmotors.com

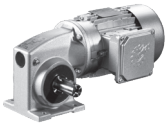

MINICASE® Examples

Examples of Available Helical-worm Units with Solid Shaft Design

SK 1SMID50VX - 80 S/4
Minicase Worm Unit
Solid Shaft Side A,
Foot Mounted
One Stage

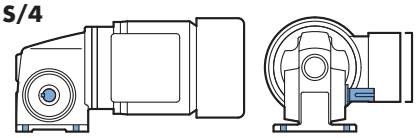

SK 1SMID50VF - 80 S/4
Minicase Worm Unit
Solid Shaft Side A,
B5 Flange Side A,
One Stage

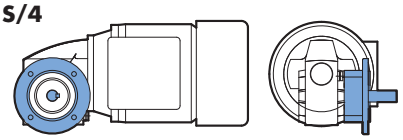

SK 1SMID50VZ - 80 S/4
Minicase Worm Unit
Solid Shaft Side A,
B14 Flange Side A,
One Stage

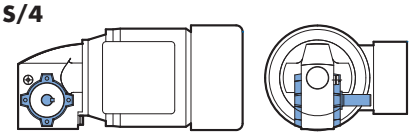

SK 1SMID50LX - 80 S/4
Minicase Worm Unit
Double Solid Shaft,
Foot Mounted
One Stage

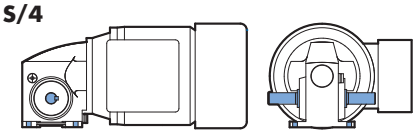

SK 2SMID50VX - 71 S/4
Minicase Worm Unit
Solid Shaft Side A,
Foot Mounted
5:1 Helical Input
Integral Motor Only

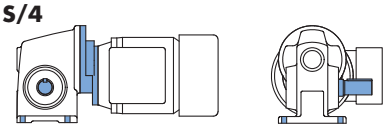

SK 1SMI50 - H10VX - 56C
Minicase Worm Unit
Solid Shaft Side A,
Foot Mounted
10:1 Helical Input
56C Nema Input

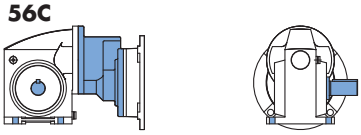

Examples of Available Helical-worm Units with Hollow Shaft Design

SK 1SMID50AX - 80 S/4
Minicase Worm Unit
Hollow Shaft,
Foot Mounted
One Stage

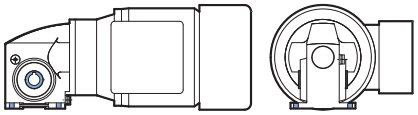

SK 1SMID50AZ - 80 S/4
Minicase Worm Unit
Hollow Shaft,
B14 Flange Side A,
One Stage

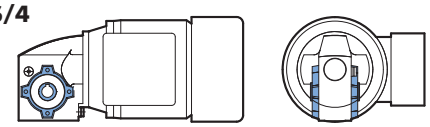

SK 1SMID50AF - 80 S/4
Minicase Worm Unit
Hollow Shaft,
B5 Flange Side A,
One Stage

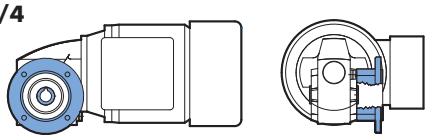

SK 1SMID50AZD - 80 S/4
Minicase Worm Unit
Hollow Shaft,
B14 Flange Side A,
Torque Arm Side A
at 180°, One Stage

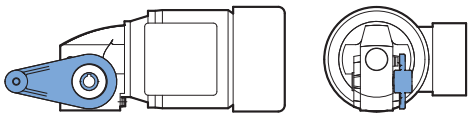

SK 2SMID50AX - 71 S/4
Minicase Worm Unit
Hollow Shaft,
Foot Mounted,
5:1 Helical Input
Integral Motor Only

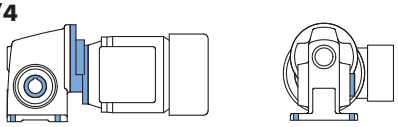

SK 1SMI50 - H10AF - 56C
Minicase Worm Unit
Hollow Shaft,
B5 Flange Side A
10:1 Helical Input
56C Nema Input

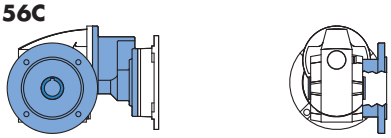

Send Quote Requests to info@automatedpt.com
Call +1(800)985-6929 To Order or Order Online At Nordgearmotors.com

0.16 hp - MINICASE® Integral Gearmotors

NORD DRIVESYSTEMS

RATINGS

Motor Power P_1 [hp]	Output Speed n_2 [rpm]	Output Torque T_2 [lb-in]	Service Factor f_B	Total Ratio i_{tot}	Worm Ratio i_{worm}	2nd Ratio i_{2nd}	OHL F_R [lb]	OHL Flange Unit F_{RF} [lb]	Model Type	Approx. Weight [lb]	Dim. Page
0.16	340	26	7.8	5	5		259	180	**SK 1SMID31 - 63S/4**	11	172
	227	37	6.4	7.5	7.5		295	205			
	170	48	4.8	10	10		322	225			
	136	60	3.6	12.5	12.5		344	234			
	113	64	4.0	15	15		367	234			
	85	81	2.9	20	20		401	234			
	68	97	2.3	25	25		405	234			
	57	100	2.6	30	30		405	234			
	43	122	2.0	40	40		405	234			
	34	140	1.6	50	50		405	234			
	28	154	1.4	60	60		405	232			
	21	177	1.1	80	80		405	232			
	17	196	0.9	100	100		405	232			
	340	27	12.7	5	5		608	416	**SK 1SMID40 - 63S/4**	13	178
	227	38	10.2	7.5	7.5		693	416			
	170	50	7.5	10	10		720	414			
	136	60	6.1	12.5	12.5		720	414			
	113	68	6.4	15	15		720	414			
	85	86	4.6	20	20		720	414			
	68	103	3.6	25	25		720	414			
	57	109	4.1	30	30		720	414			
	43	134	3.0	40	40		720	414			
	34	155	2.5	50	50		720	414			
	28	172	2.1	60	60		720	414			
	21	200	1.6	80	80		720	414			
	17	221	1.4	100	100		720	412			
	11	376	1.7	150	30	5	720	407	**SK 1SMID40/31 - 63S/4**	17	204
	7.6	524	1.3	225	30	7.5	720	401			
	5.7	662	1.1	300	30	10	720	392			
	4.5	716	1.0	375	30	12.5	720	389			
	3.8	859	0.9	450	30	15	720	376			
	2.8	962	0.8	600	30	20	720	365			
	2.3	974	0.8	750	30	25	720	365			
	1.9	996	0.8	900	30	30	720	362			
	1.4	1029	0.8	1200	30	40	720	358			
	1.1	1051	0.8	1500	30	50	720	356			
	0.9	1062	0.8	1800	30	60	720	353			
	0.7	1084	0.8	2400	30	80	720	351			
	0.6	1095	0.8	3000	30	100	720	349			

(AGMA Class I = f_B 1.0 - 1.39 II = f_B 1.4 - 1.99 III = f_B ≥ 2.0)

Send Quote Requests to info@automatedpt.com
Call +1(800)985-6929 To Order or Order Online At Nordgearmotors.com

NORD DRIVESYSTEMS

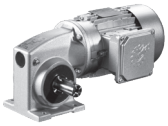

0.16 hp - MINICASE® Integral Gearmotors

Motor Power P_1 [hp]	Output Speed n_2 [rpm]	Output Torque T_2 [lb-in]	Service Factor f_B	Total Ratio i_{tot}	Worm Ratio i_{worm}	2nd Ratio i_{2nd}	OHL F_R [lb]	OHL Flange Unit F_{RF} [lb]	Model Type	Approx. Weight [lb]	Dim. Page
0.16	11	412	2.9	150	30	5	1080	839	**SK 1SMID50/31 - 63S/4**	22	204
	7.6	550	2.3	225	30	7.5	1080	837			
	5.7	698	1.9	300	30	10	1080	835			
	4.5	716	1.8	375	30	12.5	1080	835			
	3.8	913	1.5	450	30	15	1080	828			
	2.8	1110	1.2	600	30	20	1080	821			
	2.3	1298	1.1	750	30	25	1080	812			
	1.9	1342	1.1	900	30	30	1080	810			
	1.4	1647	0.9	1200	30	40	1080	794			
	1.1	1892	0.8	1500	30	50	1080	779			
	0.9	1914	0.8	1800	30	60	1080	776			
	0.7	1947	0.8	2400	30	80	1080	774			
	0.6	1969	0.8	3000	30	100	1080	772			
	11	430	4.9	150	30	5	1418	776	**SK 1SMID63/31 - 63S/4**	24	204
	7.6	577	3.8	225	30	7.5	1418	774			
	5.7	734	3.1	300	30	10	1418	772			
	4.5	716	3.3	375	30	12.5	1418	772			
	3.8	940	2.5	450	30	15	1418	765			
	2.8	1145	2.1	600	30	20	1418	758			
	2.3	1342	1.9	750	30	25	1418	749			
	1.9	1396	1.8	900	30	30	1418	747			
	1.4	1647	1.6	1200	30	40	1418	734			
	1.1	1790	1.5	1500	30	50	1418	727			
	0.9	2040	1.3	1800	30	60	1418	709			
	0.7	2291	1.2	2400	30	80	1411	689			
	0.6	2506	1.1	3000	30	100	1373	671			
	11	430	6.6	150	30	5	1800	1800	**SK 1SMID75/40 - 63S/4**	44	204
	7.6	591	5.1	225	30	7.5	1800	1800			
	5.7	752	4.1	300	30	10	1800	1800			
	4.5	716	4.4	375	30	12.5	1800	1800			
	3.8	966	3.3	450	30	15	1800	1800			
	2.8	1181	2.8	600	30	20	1800	1800			
	2.3	1387	2.4	750	30	25	1800	1800			
	1.9	1450	2.4	900	30	30	1800	1800			
	1.4	1718	2.1	1200	30	40	1800	1800			
	1.1	1969	1.8	1500	30	50	1800	1800			
	0.9	2148	1.7	1800	30	60	1800	1800			
	0.7	2434	1.5	2400	30	80	1800	1800			
	0.6	2327	1.6	3000	30	100	1800	1800			

(AGMA Class I = f_B 1.0 - 1.39 II = f_B 1.4 - 1.99 III = f_B ≥ 2.0)

Send Quote Requests to info@automatedpt.com
Call +1(800)985-6929 To Order or Order Online At Nordgearmotors.com

0.25 hp - MINICASE® Integral Gearmotors

NORD® DRIVESYSTEMS

RATINGS

Motor Power P_1 [hp]	Output Speed n_2 [rpm]	Output Torque T_2 [lb-in]	Service Factor f_B	Total Ratio i_{tot}	Worm Ratio i_{worm}	2nd Ratio i_{2nd}	OHL F_R [lb]	OHL Flange Unit F_{RF} [lb]	Model Type	Approx. Weight [lb]	Dim. Page
0.25	336	42	4.9	5	5		254	178	SK 1SMID31 - 63L/4	13	172
	224	60	4.0	7.5	7.5		290	203			
	168	76	3.0	10	10		317	221			
	134	96	2.2	12.5	12.5		335	234			
	112	103	2.5	15	15		358	234			
	84	130	1.8	20	20		389	234			
	67	155	1.4	25	25		405	232			
	56	161	1.7	30	30		405	232			
	42	195	1.3	40	40		405	232			
	34	225	1.0	50	50		405	230			
	28	242	0.9	60	60		405	227			
	336	43	7.9	5	5		603	414	SK 1SMID40 -63L/4	15	178
	224	61	6.4	7.5	7.5		691	414			
	168	79	4.7	10	10		720	414			
	134	96	3.8	12.5	12.5		720	414			
	112	109	4.0	15	15		720	414			
	84	138	2.9	20	20		720	414			
	67	165	2.3	25	25		720	414			
	56	175	2.5	30	30		720	414			
	42	214	1.9	40	40		720	412			
	34	249	1.5	50	50		720	412			
	28	275	1.3	60	60		720	412			
	21	321	1.0	80	80		720	410			
	17	354	0.9	100	100		720	410			
	11	602	1.1	150	30	5	720	396	SK 1SMID40/31 - 63L/4	17	204
	7.5	839	0.8	225	30	7.5	720	378			
	11	660	1.8	150	30	5	1080	835	SK 1SMID50/31 - 63L/4	22	204
	7.5	882	1.4	225	30	7.5	1080	830			
	5.6	1118	1.2	300	30	10	1080	821			
	4.5	1147	1.1	375	30	12.5	1080	819			
	3.7	1462	0.9	450	30	15	1080	806			
	2.8	1778	0.8	600	30	20	1080	785			
	11	688	3.0	150	30	5	1418	772	SK 1SMID63/31 - 63L/4	26	204
	7.5	925	2.4	225	30	7.5	1418	765			
	5.6	1176	2.0	300	30	10	1418	756			
	4.5	1147	2.0	375	30	12.5	1418	758			
	3.7	1505	1.6	450	30	15	1418	743			
	2.8	1835	1.3	600	30	20	1418	722			
	2.2	2151	1.2	750	30	25	1418	700			
	1.9	2237	1.1	900	30	30	1418	693			
	1.4	2638	1.0	1200	30	40	1346	657			
	1.1	2868	0.9	1500	30	50	1296	632			
	0.9	3269	0.8	1800	30	60	1190	581			
	0.7	3670	0.8	2400	30	80	1060	518			

(AGMA Class I = f_B 1.0 - 1.39 II = f_B 1.4 - 1.99 III = f_B ≥ 2.0)

Send Quote Requests to info@automatedpt.com
Call +1(800)985-6929 To Order or Order Online At Nordgearmotors.com

NORD DRIVESYSTEMS

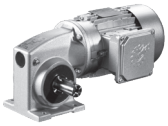

0.25 hp, 0.33 hp - MINICASE® Integral Gearmotors

Motor Power P_1 [hp]	Output Speed n_2 [rpm]	Output Torque T_2 [lb-in]	Service Factor f_B	Total Ratio i_{tot}	Worm Ratio i_{worm}	2nd Ratio i_{2nd}	OHL F_R [lb]	OHL Flange Unit F_{RF} [lb]	Model Type	Approx. Weight [lb]	Dim. Page
0.25	11	688	4.1	150	30	5	1800	1800	SK 1SMI75/40 - 63L/4	46	204
	7.5	946	3.2	225	30	7.5	1800	1800			
	5.6	1204	2.6	300	30	10	1800	1800			
	4.5	1147	2.8	375	30	12.5	1800	1800			
	3.7	1548	2.1	450	30	15	1800	1800			
	2.8	1893	1.8	600	30	20	1800	1800			
	2.2	2222	1.5	750	30	25	1800	1800			
	1.9	2323	1.5	900	30	30	1800	1800			
	1.4	2753	1.3	1200	30	40	1800	1800			
	1.1	3154	1.2	1500	30	50	1800	1800			
	0.9	3441	1.1	1800	30	60	1800	1800			
	0.7	3900	1.0	2400	30	80	1800	1800			
	0.6	3728	1.0	3000	30	100	1800	1800			
0.33	342	54	3.8	5	5		248	173	SK 1SMID31 - 71S/4	15	172
	228	77	3.1	7.5	7.5		284	196			
	171	99	2.3	10	10		308	214			
	137	124	1.7	12.5	12.5		326	227			
	114	133	1.9	15	15		347	234			
	86	168	1.4	20	20		376	232			
	68	201	1.1	25	25		401	230			
	57	208	1.3	30	30		405	230			
	43	252	1.0	40	40		405	227			
	34	286	0.8	50	50		405	225			
	342	55	6.1	5	5		596	414	SK 1SMID40 - 71S/4	17	178
	228	79	4.9	7.5	7.5		682	414			
	171	103	3.6	10	10		720	414			
	137	124	2.9	12.5	12.5		720	414			
	114	141	3.1	15	15		720	414			
	86	178	2.2	20	20		720	414			
	68	213	1.7	25	25		720	414			
	57	226	2.0	30	30		720	412			
	43	277	1.5	40	40		720	412			
	34	321	1.2	50	50		720	410			
	29	356	1.0	60	60		720	410			
	21	415	0.8	80	80		720	407			
	342	56	10.4	5	5		1080	826	SK 1SMID50 - 71S/4	22	184
	228	82	8.5	7.5	7.5		1080	844			
	171	106	6.2	10	10		1080	844			
	137	124	5.2	12.5	12.5		1080	844			
	114	148	5.2	15	15		1080	842			
	86	190	3.8	20	20		1080	842			
	68	229	2.9	25	25		1080	842			
	57	245	3.3	30	30		1080	842			
	43	306	2.4	40	40		1080	842			
	34	358	1.9	50	50		1080	842			
	29	400	1.6	60	60		1080	839			
	21	474	1.2	80	80		1080	839			
	17	531	1.0	100	100		1080	837			

(AGMA Class I = f_B 1.0 - 1.39 II = f_B 1.4 - 1.99 III = f_B ≥ 2.0)

RATINGS

Send Quote Requests to info@automatedpt.com
Call +1(800)985-6929 To Order or Order Online At Nordgearmotors.com

0.33 hp, 0.5 hp - MINICASE® Integral Gearmotors

NORD DRIVESYSTEMS

RATINGS

Motor Power P_1 [hp]	Output Speed n_2 [rpm]	Output Torque T_2 [lb-in]	Service Factor f_B	Total Ratio i_{tot}	Worm Ratio i_{worm}	2nd Ratio i_{2nd}	OHL F_R [lb]	OHL Flange Unit F_{RF} [lb]	Model Type	Approx. Weight [lb]	Dim. Page
0.33	11	778	0.8	150	30	5	720	383	**SK 1SMID40/31 - 71S/4**	22	204
	11	853	1.4	150	30	5	1080	830	**SK 1SMID50/31 - 71S/4**	26	204
	7.6	1140	1.1	225	30	7.5	1080	819			
	5.7	1446	0.9	300	30	10	1080	806			
	4.6	1483	0.9	375	30	12.5	1080	803			
	11	890	2.4	150	30	5	1418	767	**SK 1SMID63/31 - 71S/4**	30	204
	7.6	1195	1.9	225	30	7.5	1418	756			
	5.7	1520	1.5	300	30	10	1418	740			
	4.6	1483	1.6	375	30	12.5	1418	743			
	3.8	1946	1.2	450	30	15	1418	716			
	2.9	2372	1.0	600	30	20	1397	682			
	2.3	2780	0.9	750	30	25	1316	641			
	1.9	2891	0.9	900	30	30	1289	630			
	1.4	3410	0.8	1200	30	40	1148	560			
	11	890	3.2	150	30	5	1800	1800	**SK 1SMID75/40 - 71S/4**	48	204
	7.6	1223	2.5	225	30	7.5	1800	1800			
	5.7	1557	2.0	300	30	10	1800	1800			
	4.6	1483	2.1	375	30	12.5	1800	1800			
	3.8	2002	1.6	450	30	15	1800	1800			
	2.9	2447	1.4	600	30	20	1800	1800			
	2.3	2873	1.2	750	30	25	1800	1800			
	1.9	3003	1.1	900	30	30	1800	1800			
	1.4	3559	1.0	1200	30	40	1800	1800			
	1.1	4078	0.9	1500	30	50	1800	1800			
	0.9	4448	0.8	1800	30	60	1800	1800			
	0.6	4819	0.8	3000	30	100	1800	1800			
0.5	344	79	2.6	5	5		241	167	**SK 1SMID31 - 71L/4**	17	172
	229	113	2.1	7.5	7.5		272	189			
	172	145	1.6	10	10		295	205			
	138	182	1.2	12.5	12.5		311	216			
	115	196	1.3	15	15		329	230			
	86	247	1.0	20	20		356	227			
	57	308	0.9	30	30		398	223			
	344	81	4.2	5	5		590	414	**SK 1SMID40 - 71L/4**	19	178
	229	116	3.4	7.5	7.5		673	414			
	172	151	2.5	10	10		720	414			
	138	182	2.0	12.5	12.5		720	414			
	115	207	2.1	15	15		720	414			
	86	262	1.5	20	20		720	412			
	69	314	1.2	25	25		720	410			
	57	333	1.3	30	30		720	410			
	43	407	1.0	40	40		720	407			
	34	473	0.8	50	50		720	403			

(AGMA Class I = f_B 1.0 - 1.39 II = f_B 1.4 - 1.99 III = f_B ≥ 2.0)

Send Quote Requests to info@automatedpt.com
Call +1(800)985-6929 To Order or Order Online At Nordgearmotors.com

NORD DRIVESYSTEMS

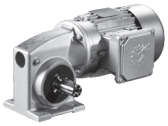

0.5 hp, 0.75 hp - MINICASE® Integral Gearmotors

Motor Power P_1 [hp]	Output Speed n_2 [rpm]	Output Torque T_2 [lb-in]	Service Factor f_B	Total Ratio i_{tot}	Worm Ratio i_{worm}	2nd Ratio i_{2nd}	OHL F_R [lb]	OHL Flange Unit F_{RF} [lb]	Model Type	Approx. Weight [lb]	Dim. Page
0.5	344	83	7.1	5	5		1080	821	SK 1SMID50 - 71L/4	24	184
	229	120	5.8	7.5	7.5		1080	844			
	172	156	4.2	10	10		1080	842			
	138	182	3.5	12.5	12.5		1080	842			
	115	218	3.5	15	15		1080	842			
	86	280	2.6	20	20		1080	842			
	69	336	2.0	25	25		1080	842			
	57	360	2.2	30	30		1080	842			
	43	451	1.6	40	40		1080	839			
	34	527	1.3	50	50		1080	837			
	29	589	1.1	60	60		1080	837			
	22	698	0.8	80	80		1080	835			
	11	1254	0.9	150	30	5	1080	815	SK 1SMID50/31 - 71L/4	26	204
	11	1309	1.6	150	30	5	1418	752	SK 1SMID63/31 - 71L/4	30	204
	7.6	1759	1.3	225	30	7.5	1418	727			
	5.7	2236	1.0	300	30	10	1418	693			
	4.6	2182	1.1	375	30	12.5	1418	698			
	3.8	2864	0.8	450	30	15	1296	632			
	11	1309	2.2	150	30	5	1800	1800	SK 1SMID75/40 - 71L/4	48	204
	7.6	1800	1.7	225	30	7.5	1800	1800			
	5.7	2291	1.4	300	30	10	1800	1800			
	4.6	2182	1.5	375	30	12.5	1800	1800			
	3.8	2945	1.1	450	30	15	1800	1800			
	2.9	3600	0.9	600	30	20	1800	1800			
	2.3	4227	0.8	750	30	25	1800	1800			
	1.9	4418	0.8	900	30	30	1800	1800			
0.75	342	123	2.7	5	5		583	414	SK 1SMID40 - 80S/4	26	178
	228	176	2.2	7.5	7.5		662	414			
	171	230	1.6	10	10		720	412			
	137	277	1.3	12.5	12.5		720	412			
	114	316	1.4	15	15		720	410			
	86	399	1.0	20	20		720	407			
	68	477	0.8	25	25		720	403			
	57	507	0.9	30	30		720	403			
	342	126	4.6	5	5		1080	817	SK 1SMID50 - 80S/4	30	184
	228	183	3.8	7.5	7.5		1080	842			
	171	238	2.8	10	10		1080	842			
	137	277	2.3	12.5	12.5		1080	842			
	114	332	2.3	15	15		1080	842			
	86	426	1.7	20	20		1080	839			
	68	512	1.3	25	25		1080	839			
	57	548	1.5	30	30		1080	837			
	43	686	1.1	40	40		1080	835			
	34	803	0.8	50	50		1080	833			

(AGMA Class I = f_B 1.0 - 1.39 II = f_B 1.4 - 1.99 III = f_B ≥ 2.0)

RATINGS

Send Quote Requests to info@automatedpt.com
Call +1(800)985-6929 To Order or Order Online At Nordgearmotors.com

0.75 hp, 1.0 hp - MINICASE® Integral Gearmotors

NORD® DRIVESYSTEMS

RATINGS

Motor Power P_1 [hp]	Output Speed n_2 [rpm]	Output Torque T_2 [lb-in]	Service Factor f_B	Total Ratio i_{tot}	Worm Ratio i_{worm}	2nd Ratio i_{2nd}	OHL F_R [lb]	OHL Flange Unit F_{RF} [lb]	Model Type	Approx. Weight [lb]	Dim. Page
0.75	342	127	6.4	5	5		1418	779	SK 1SMID63 - 80S/4	32	190
	228	187	6.4	7.5	7.5		1418	779			
	171	244	4.9	10	10		1418	779			
	137	277	4.1	12.5	12.5		1418	779			
	114	345	4.0	15	15		1418	779			
	86	443	2.9	20	20		1418	776			
	68	533	2.2	25	25		1418	774			
	57	581	2.4	30	30		1418	774			
	43	731	1.8	40	40		1418	772			
	34	858	1.4	50	50		1418	767			
	29	980	1.2	60	60		1418	763			
	21	1174	0.9	80	80		1418	756			
	11	1993	1.4	150	30	5	1800	1800	SK 1SMID75/40 - 80S/4	56	204
	7.6	2740	1.1	225	30	7.5	1800	1800			
	5.7	3487	0.9	300	30	10	1800	1800			
	4.6	3321	1.0	375	30	12.5	1800	1800			
1.0	350	161	2.1	5	5		576	414	SK 1SMID40 - 80L/4	28	178
	233	231	1.7	7.5	7.5		655	412	SK 1SMID40 - 80LH/4		
	175	301	1.2	10	10		713	410	SK 1SMID40 - 80LP/4		
	140	362	1.0	12.5	12.5		720	407			
	117	412	1.1	15	15		720	405			
	350	165	3.5	5	5		1080	819	SK 1SMID50 - 80L/4	32	184
	233	240	2.9	7.5	7.5		1080	842	SK 1SMID50 - 80LH/4		
	175	311	2.1	10	10		1080	842	SK 1SMID50 - 80LP/4		
	140	362	1.8	12.5	12.5		1080	839			
	117	433	1.8	15	15		1080	839			
	88	555	1.3	20	20		1080	837			
	70	670	1.0	25	25		1080	835			
	58	722	1.1	30	30		1080	833			
	44	888	0.8	40	40		1080	828			
	350	167	6.3	5	5		1418	779	SK 1SMID63 - 80L/4	35	190
	233	245	5.0	7.5	7.5		1418	779	SK 1SMID63 - 80LH/4		
	175	319	3.7	10	10		1418	779	SK 1SMID63 - 80LP/4		
	140	362	3.2	12.5	12.5		1418	776			
	117	449	3.1	15	15		1418	776			
	88	577	2.2	20	20		1418	774			
	70	698	1.7	25	25		1418	770			
	58	765	1.9	30	30		1418	770			
	44	951	1.4	40	40		1418	763			
	35	1123	1.1	50	50		1418	756			
	29	1290	0.9	60	60		1418	749			
	12	2536	1.1	150	30	5	1800	1800	SK 1SMID75/40 - 80L/4	61	202
	8	3486	0.9	225	30	7.5	1800	1800	SK 1SMID75/40 - 80LH/4		
									SK 1SMID75/40 - 80LP/4		

(Model type in blue is an energy efficient motor)

(Model type in light blue is a premium efficient motor)

(AGMA Class I = f_B 1.0 - 1.39 II = f_B 1.4 - 1.99 III = f_B ≥ 2.0)

Send Quote Requests to info@automatedpt.com
Call +1(800)985-6929 To Order or Order Online At Nordgearmotors.com

NORD DRIVESYSTEMS

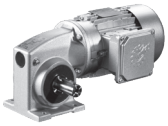

1.5 hp, 2.0 hp - MINICASE® Integral Gearmotors

Motor Power P_1 [hp]	Output Speed n_2 [rpm]	Output Torque T_2 [lb-in]	Service Factor f_B	Total Ratio i_{tot}	Worm Ratio i_{worm}	2nd Ratio i_{2nd}	OHL F_R [lb]	OHL Flange Unit F_{RF} [lb]	Model Type	Approx. Weight [lb]	Dim. Page
1.5	348	247	2.4	5	5		1078	803	SK 1SMID50 - 90S/4	42	184
	232	359	1.9	7.5	7.5		1080	842	SK 1SMID50 - 90SH/4		
	174	468	1.4	10	10		1080	839	SK 1SMID50 - 90SP/4		
	139	545	1.2	12.5	12.5		1080	837			
	116	655	1.2	15	15		1080	835			
	87	838	0.9	20	20		1080	830			
	348	250	4.2	5	5		1418	779	SK 1SMID63 - 90S/4	45	184
	232	354	3.5	7.5	7.5		1418	776	SK 1SMID63 - 90SH/4		
	174	479	2.5	10	10		1418	776	SK 1SMID63 - 90SP/4		
	139	545	2.1	12.5	12.5		1418	774			
	116	677	2.0	15	15		1418	772			
	87	870	1.5	20	20		1418	765			
	70	1042	1.1	25	25		1418	761			
	58	1143	1.2	30	30		1418	756			
	44	1437	0.9	40	40		1418	743			
2.0	349	328	1.8	5	5		1060	792	SK 1SMID50 - 90L/4	45	184
	233	475	1.5	7.5	7.5		1080	839	SK 1SMID50 - 90LH/4		
	175	619	1.1	10	10		1080	835	SK 1SMID50 - 90LP/4		
	140	721	0.9	12.5	12.5		1080	833			
	116	871	0.9	15	15		1080	828			
	349	332	3.1	5	5		1418	779	SK 1SMID63 - 90L/4	49	190
	233	486	2.5	7.5	7.5		1418	776	SK 1SMID63 - 90LH/4		
	175	634	1.9	10	10		1418	772	SK 1SMID63 - 90LP/4		
	140	720	1.6	12.5	12.5		1418	770			
	116	901	1.5	15	15		1418	765			
	87	1158	1.1	20	20		1418	756			
	70	1385	0.9	25	25		1418	745			
	58	1520	0.9	30	30		1418	738			

(Model type in blue is an energy efficient motor)
(Model type in light blue is a premium efficient motor)

(AGMA Class I = f_B 1.0 - 1.39 II = f_B 1.4 - 1.99 III = f_B ≥ 2.0)

RATINGS

Send Quote Requests to info@automatedpt.com
Call +1(800)985-6929 To Order or Order Online At Nordgearmotors.com

Send Quote Requests to info@automatedpt.com
Call +1(800)985-6929 To Order or Order Online At Nordgearmotors.com

Notes

Send Quote Requests to info@automatedpt.com
Call +1(800)985-6929 To Order or Order Online At Nordgearmotors.com

Send Quote Requests to info@automatedpt.com
Call +1(800)985-6929 To Order or Order Online At Nordgearmotors.com

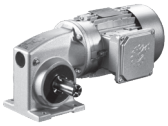

Notes

Send Quote Requests to info@automatedpt.com
Call +1(800)985-6929 To Order or Order Online At Nordgearmotors.com

0.16 hp - MINICASE® Motorized C-Face Reducers

DRIVESYSTEMS

RATINGS

Motor Power P_1 [hp]	Output Speed n_2 [rpm]	Output Torque T_2 [lb-in]	Service Factor f_B	Total Ratio i_{tot}	Worm Ratio i_{worm}	2nd Ratio i_{2nd}	OHL F_R [lb]	OHL Flange Unit F_{RF} [lb]	Model Type	Approx. Weight [lb]	Dim. Page
0.16	340	26	7.8	5	5		259	180	**SK 1SMI31 - 56C - 63S/4**	12	176
	227	37	6.4	7.5	7.5		295	205			
	170	48	4.8	10	10		322	225			
	136	60	3.6	12.5	12.5		344	234			
	113	64	4.0	15	15		367	234			
	85	81	2.9	20	20		401	234			
	68	97	2.3	25	25		405	234			
	57	100	2.6	30	30		405	234			
	43	122	2.0	40	40		405	234			
	34	140	1.6	50	50		405	234			
	28	154	1.4	60	60		405	232			
	21	177	1.1	80	80		405	232			
	17	196	0.9	100	100		405	232			
	340	27	12.7	5	5		608	416	**SK 1SMI40 - 56C - 63S/4**	14	182
	227	38	10.2	7.5	7.5		693	416			
	170	50	7.5	10	10		720	414			
	136	60	6.1	12.5	12.5		720	414			
	113	68	6.4	15	15		720	414			
	85	86	4.6	20	20		720	414			
	68	103	3.6	25	25		720	414			
	57	109	4.1	30	30		720	414			
	43	134	3.0	40	40		720	414			
	34	155	2.5	50	50		720	414			
	28	172	2.1	60	60		720	414			
	21	200	1.6	80	80		720	414			
	17	221	1.4	100	100		720	412			
	340	27	21.5	5	5		1080	835	**SK 1SMI50 - 56C - 63S/4**	19	188
	227	39	17.5	7.5	7.5		1080	844			
	170	51	12.9	10	10		1080	844			
	136	60	10.7	12.5	12.5		1080	844			
	113	72	10.8	15	15		1080	844			
	85	92	7.8	20	20		1080	844			
	68	110	6.1	25	25		1080	844			
	57	118	6.7	30	30		1080	844			
	43	148	5.0	40	40		1080	842			
	34	173	3.9	50	50		1080	842			
	28	193	3.3	60	60		1080	842			
	21	229	2.6	80	80		1080	842			
	17	257	2.1	100	100		1080	842			

(AGMA Class I = f_B 1.0 - 1.39 II = f_B 1.4 - 1.99 III = f_B ≥ 2.0)

Send Quote Requests to info@automatedpt.com
Call +1(800)985-6929 To Order or Order Online At Nordgearmotors.com

NORD DRIVESYSTEMS

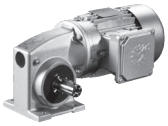

0.16 hp - MINICASE® Motorized C-Face Reducers

Motor Power P_1 [hp]	Output Speed n_2 [rpm]	Output Torque T_2 [lb-in]	Service Factor f_B	Total Ratio i_{tot}	Worm Ratio i_{worm}	2nd Ratio i_{2nd}	OHL F_R [lb]	OHL Flange Unit F_{RF} [lb]	Model Type	Approx. Weight [lb]	Dim. Page
0.16	340	27	29.7	5	5		1418	779	SK 1SMI63 - 56C - 63S/4	23	194
	227	40	29.7	7.5	7.5		1418	779			
	170	53	22.6	10	10		1418	779			
	136	60	19.1	12.5	12.5		1418	779			
	113	74	18.5	15	15		1418	779			
	85	95	13.4	20	20		1418	779			
	68	115	10.4	25	25		1418	779			
	57	125	11.3	30	30		1418	779			
	43	158	8.3	40	40		1418	779			
	34	185	6.6	50	50		1418	779			
	28	211	5.4	60	60		1418	779			
	21	253	4.1	80	80		1418	779			
	17	292	3.3	100	100		1418	779			
	34	242	2.3	50	5	10	720	412	SK 1SMI40/H10 - 56C - 63S/4	19	202
	23	340	1.9	75	7.5	10	720	410			
	17	436	1.4	100	10	10	720	405			
	14	544	1.1	125	12.5	10	720	401			
	11	573	1.2	150	15	10	720	398			
	8.5	704	0.9	200	20	10	720	389			
	6.8	763	0.8	250	25	10	720	385			
	5.7	823	0.9	300	30	10	720	380			
	4.3	830	0.8	400	40	10	720	378			
	3.4	774	0.8	500	50	10	720	383			
	2.8	730	0.8	600	60	10	720	387			
	2.1	664	0.8	800	80	10	720	392			
	1.7	608	0.8	1000	100	10	720	396			
	34	248	3.7	50	5	10	1080	842	SK 1SMI50/H10 - 56C - 63S/4	23	202
	23	349	3.2	75	7.5	10	1080	842			
	17	447	2.4	100	10	10	1080	839			
	14	544	1.9	125	12.5	10	1080	837			
	11	591	2.1	150	15	10	1080	837			
	8.5	728	1.6	200	20	10	1080	833			
	6.8	865	1.3	250	25	10	1080	830			
	5.7	877	1.5	300	30	10	1080	830			
	4.3	1050	1.1	400	40	10	1080	824			
	3.4	1193	0.9	500	50	10	1080	817			
	2.8	1305	0.8	600	60	10	1080	812			
	2.1	1195	0.8	800	80	10	1080	817			
	1.7	1117	0.8	1000	100	10	1080	821			

RATINGS

(AGMA Class I = f_B 1.0 - 1.39 II = f_B 1.4 - 1.99 III = f_B ≥ 2.0)

Send Quote Requests to info@automatedpt.com
Call +1(800)985-6929 To Order or Order Online At Nordgearmotors.com

0.16 hp - MINICASE® Motorized C-Face Reducers

DRIVESYSTEMS

RATINGS

Motor Power P_1 [hp]	Output Speed n_2 [rpm]	Output Torque T_2 [lb-in]	Service Factor f_B	Total Ratio i_{tot}	Worm Ratio i_{worm}	2nd Ratio i_{2nd}	OHL F_R [lb]	OHL Flange Unit F_{RF} [lb]	Model Type	Approx. Weight [lb]	Dim. Page
0.16	34	251	3.7	50	5	10	1418	779	**SK 1SMI63/H10 - 56C - 63S/4**	25	202
	23	353	3.6	75	7.5	10	1418	779			
	17	453	3.7	100	10	10	1418	776			
	14	544	3.4	125	12.5	10	1418	774			
	11	609	3.7	150	15	10	1418	774			
	8.5	752	2.8	200	20	10	1418	770			
	6.8	880	2.2	250	25	10	1418	767			
	5.7	913	2.5	300	30	10	1418	765			
	4.3	1098	1.9	400	40	10	1418	761			
	3.4	1223	1.6	500	50	10	1418	754			
	2.8	1360	1.4	600	60	10	1418	749			
	2.1	1527	1.1	800	80	10	1418	740			
	1.7	1670	0.9	1000	100	10	1418	734			
	11	376	1.7	150	30	5	720	407	**SK 1SMI40/31 - 56C - 63S/4**	18	204
	7.6	524	1.3	225	30	7.5	720	401			
	5.7	662	1.1	300	30	10	720	392			
	4.5	716	1.0	375	30	12.5	720	389			
	3.8	859	0.9	450	30	15	720	376			
	2.8	962	0.8	600	30	20	720	365			
	2.3	974	0.8	750	30	25	720	365			
	1.9	996	0.8	900	30	30	720	362			
	1.4	1029	0.8	1200	30	40	720	358			
	1.1	1051	0.8	1500	30	50	720	356			
	0.9	1062	0.8	1800	30	60	720	353			
	0.7	1084	0.8	2400	30	80	720	351			
	0.6	1095	0.8	3000	30	100	720	349			
	11	412	2.9	150	30	5	1080	839	**SK 1SMI50/31 - 56C - 63S/4**	23	204
	7.6	550	2.3	225	30	7.5	1080	837			
	5.7	698	1.9	300	30	10	1080	835			
	4.5	716	1.8	375	30	12.5	1080	835			
	3.8	913	1.5	450	30	15	1080	828			
	2.8	1110	1.2	600	30	20	1080	821			
	2.3	1298	1.1	750	30	25	1080	812			
	1.9	1342	1.1	900	30	30	1080	810			
	1.4	1647	0.9	1200	30	40	1080	794			
	1.1	1892	0.8	1500	30	50	1080	779			
	0.9	1914	0.8	1800	30	60	1080	776			
	0.7	1947	0.8	2400	30	80	1080	774			
	0.6	1969	0.8	3000	30	100	1080	772			

(AGMA Class I = f_B 1.0 - 1.39 II = f_B 1.4 - 1.99 III = f_B ≥ 2.0)

Send Quote Requests to info@automatedpt.com
Call +1(800)985-6929 To Order or Order Online At Nordgearmotors.com

NORD DRIVESYSTEMS

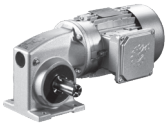

0.16 hp - MINICASE® Motorized C-Face Reducers

Motor Power P_1 [hp]	Output Speed n_2 [rpm]	Output Torque T_2 [lb-in]	Service Factor f_B	Total Ratio i_{tot}	Worm Ratio i_{worm}	2nd Ratio i_{2nd}	OHL F_R [lb]	OHL Flange Unit F_{RF} [lb]	Model Type	Approx. Weight [lb]	Dim. Page
0.16	11	430	4.9	150	30	5	1418	776	**SK 1SMI63/31 - 56C - 63S/4**	25	204
	7.6	577	3.8	225	30	7.5	1418	774			
	5.7	734	3.1	300	30	10	1418	772			
	4.5	716	3.3	375	30	12.5	1418	772			
	3.8	940	2.5	450	30	15	1418	765			
	2.8	1145	2.1	600	30	20	1418	758			
	2.3	1342	1.9	750	30	25	1418	749			
	1.9	1396	1.8	900	30	30	1418	747			
	1.4	1647	1.6	1200	30	40	1418	734			
	1.1	1790	1.5	1500	30	50	1418	727			
	0.9	2040	1.3	1800	30	60	1418	709			
	0.7	2291	1.2	2400	30	80	1411	689			
	0.6	2506	1.1	3000	30	100	1373	671			
	11	430	6.6	150	30	5	1800	1800	**SK 1SMI75/40 - 56C - 63S/4**	47	204
	7.6	591	5.1	225	30	7.5	1800	1800			
	5.7	752	4.1	300	30	10	1800	1800			
	4.5	716	4.4	375	30	12.5	1800	1800			
	3.8	966	3.3	450	30	15	1800	1800			
	2.8	1181	2.8	600	30	20	1800	1800			
	2.3	1387	2.4	750	30	25	1800	1800			
	1.9	1450	2.4	900	30	30	1800	1800			
	1.4	1718	2.1	1200	30	40	1800	1800			
	1.1	1969	1.8	1500	30	50	1800	1800			
	0.9	2148	1.7	1800	30	60	1800	1800			
	0.7	2434	1.5	2400	30	80	1800	1800			
	0.6	2327	1.6	3000	30	100	1800	1800			

RATINGS

(AGMA Class I = f_B 1.0 - 1.39 II = f_B 1.4 - 1.99 III = f_B ≥ 2.0)

Send Quote Requests to info@automatedpt.com
Call +1(800)985-6929 To Order or Order Online At Nordgearmotors.com

0.25 hp - MINICASE® Motorized C-Face Reducers

NORD DRIVESYSTEMS

RATINGS

Motor Power P_1 [hp]	Output Speed n_2 [rpm]	Output Torque T_2 [lb-in]	Service Factor f_B	Total Ratio i_{tot}	Worm Ratio i_{worm}	2nd Ratio i_{2nd}	OHL F_R [lb]	OHL Flange Unit F_{RF} [lb]	Model Type	Approx. Weight [lb]	Dim. Page
0.25	336	42	4.9	5	5		254	178	SK 1SMI31 - 56C - 63L/4	14	176
	224	60	4.0	7.5	7.5		290	203			
	168	76	3.0	10	10		317	221			
	134	96	2.2	12.5	12.5		335	234			
	112	103	2.5	15	15		358	234			
	84	130	1.8	20	20		389	234			
	67	155	1.4	25	25		405	232			
	56	161	1.7	30	30		405	232			
	42	195	1.3	40	40		405	232			
	34	225	1.0	50	50		405	230			
	28	242	0.9	60	60		405	227			
	336	43	7.9	5	5		603	414	SK 1SMI40 - 56C - 63L/4	17	182
	224	61	6.4	7.5	7.5		691	414			
	168	79	4.7	10	10		720	414			
	134	96	3.8	12.5	12.5		720	414			
	112	109	4.0	15	15		720	414			
	84	138	2.9	20	20		720	414			
	67	165	2.3	25	25		720	414			
	56	175	2.5	30	30		720	414			
	42	214	1.9	40	40		720	412			
	34	249	1.5	50	50		720	412			
	28	275	1.3	60	60		720	412			
	21	321	1.0	80	80		720	410			
	17	354	0.9	100	100		720	410			
	336	43	13.4	5	5		1080	835	SK 1SMI50 - 56C - 63L/4	21	188
	224	63	10.9	7.5	7.5		1080	844			
	168	82	8.1	10	10		1080	844			
	134	96	6.7	12.5	12.5		1080	844			
	112	115	6.7	15	15		1080	844			
	84	147	4.9	20	20		1080	842			
	67	177	3.8	25	25		1080	842			
	56	189	4.2	30	30		1080	842			
	42	237	3.1	40	40		1080	842			
	34	277	2.5	50	50		1080	842			
	28	310	2.1	60	60		1080	842			
	21	367	1.6	80	80		1080	842			
	17	411	1.3	100	100		1080	839			

(AGMA Class I = f_B 1.0 - 1.39 II = f_B 1.4 - 1.99 III = f_B ≥ 2.0)

Send Quote Requests to info@automatedpt.com
Call +1(800)985-6929 To Order or Order Online At Nordgearmotors.com

NORD DRIVESYSTEMS

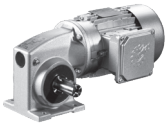

0.25 hp - MINICASE® Motorized C-Face Reducers

Motor Power P_1 [hp]	Output Speed n_2 [rpm]	Output Torque T_2 [lb-in]	Service Factor f_B	Total Ratio i_{tot}	Worm Ratio i_{worm}	2nd Ratio i_{2nd}	OHL F_R [lb]	OHL Flange Unit F_{RF} [lb]	Model Type	Approx. Weight [lb]	Dim. Page
0.25	336	44	18.5	5	5		1418	779	SK 1SMI63 - 56C - 63L/4	23	194
	224	65	18.5	7.5	7.5		1418	779			
	168	84	14.1	10	10		1418	779			
	134	96	11.9	12.5	12.5		1418	779			
	112	119	11.5	15	15		1418	779			
	84	153	8.3	20	20		1418	779			
	67	184	6.5	25	25		1418	779			
	56	201	7.1	30	30		1418	779			
	42	252	5.2	40	40		1418	779			
	34	296	4.1	50	50		1418	779			
	28	338	3.4	60	60		1418	779			
	21	405	2.6	80	80		1418	776			
	17	468	2.1	100	100		1418	776			
	34	387	1.4	50	5	10	720	407	SK 1SMI40/H10 - 56C - 63L/4	19	202
	22	545	1.2	75	7.5	10	720	401			
	17	698	0.9	100	10	10	720	389			
	11	918	0.8	150	15	10	720	369			
	34	397	2.3	50	5	10	1080	839	SK 1SMI50/H10 - 56C - 63L/4	23	202
	22	559	2.0	75	7.5	10	1080	837			
	17	717	1.5	100	10	10	1080	835			
	13	872	1.2	125	12.5	10	1080	830			
	11	946	1.3	150	15	10	1080	828			
	8.4	1166	1.0	200	20	10	1080	819			
	6.7	1386	0.8	250	25	10	1080	808			
	5.6	1405	0.9	300	30	10	1080	808			
	34	401	2.3	50	5	10	1418	776	SK 1SMI63/H10 - 56C - 63L/4	28	202
	22	566	2.3	75	7.5	10	1418	774			
	17	726	2.3	100	10	10	1418	772			
	13	872	2.1	125	12.5	10	1418	767			
	11	975	2.3	150	15	10	1418	765			
	8.4	1204	1.7	200	20	10	1418	756			
	6.7	1410	1.4	250	25	10	1418	747			
	5.6	1462	1.6	300	30	10	1418	745			
	4.2	1759	1.2	400	40	10	1418	727			
	3.4	1959	1.0	500	50	10	1418	716			
	2.8	2179	0.9	600	60	10	1418	698			

RATINGS

(AGMA Class I = f_B 1.0 - 1.39 II = f_B 1.4 - 1.99 III = f_B ≥ 2.0)

Send Quote Requests to info@automatedpt.com
Call +1(800)985-6929 To Order or Order Online At Nordgearmotors.com

0.25 hp - MINICASE® Motorized C-Face Reducers

DRIVESYSTEMS

RATINGS

Motor Power P_1 [hp]	Output Speed n_2 [rpm]	Output Torque T_2 [lb-in]	Service Factor f_B	Total Ratio i_{tot}	Worm Ratio i_{worm}	2nd Ratio i_{2nd}	OHL F_R [lb]	OHL Flange Unit F_{RF} [lb]	Model Type	Approx. Weight [lb]	Dim. Page
0.25	11	602	1.1	150	30	5	720	396	SK 1SMI40/31 - 56C - 63L/4	19	204
	7.5	839	0.8	225	30	7.5	720	378			
	11	660	1.8	150	30	5	1080	835	SK 1SMI50/31 - 56C - 63L/4	23	204
	7.5	882	1.4	225	30	7.5	1080	830			
	5.6	1118	1.2	300	30	10	1080	821			
	4.5	1147	1.1	375	30	12.5	1080	819			
	3.7	1462	0.9	450	30	15	1080	806			
	2.8	1778	0.8	600	30	20	1080	785			
	11	688	3.0	150	30	5	1418	772	SK 1SMI63/31 - 56C - 63L/4	27	204
	7.5	925	2.4	225	30	7.5	1418	765			
	5.6	1176	2.0	300	30	10	1418	756			
	4.5	1147	2.0	375	30	12.5	1418	758			
	3.7	1505	1.6	450	30	15	1418	743			
	2.8	1835	1.3	600	30	20	1418	722			
	2.2	2151	1.2	750	30	25	1418	700			
	1.9	2237	1.1	900	30	30	1418	693			
	1.4	2638	1.0	1200	30	40	1346	657			
	1.1	2868	0.9	1500	30	50	1296	632			
	0.9	3269	0.8	1800	30	60	1190	581			
	0.7	3670	0.8	2400	30	80	1060	518			
	11	688	4.1	150	30	5	1800	1800	SK 1SMI75/40 - 56C - 63L/4	48	204
	7.5	946	3.2	225	30	7.5	1800	1800			
	5.6	1204	2.6	300	30	10	1800	1800			
	4.5	1147	2.8	375	30	12.5	1800	1800			
	3.7	1548	2.1	450	30	15	1800	1800			
	2.8	1893	1.8	600	30	20	1800	1800			
	2.2	2222	1.5	750	30	25	1800	1800			
	1.9	2323	1.5	900	30	30	1800	1800			
	1.4	2753	1.3	1200	30	40	1800	1800			
	1.1	3154	1.2	1500	30	50	1800	1800			
	0.9	3441	1.1	1800	30	60	1800	1800			
	0.7	3900	1.0	2400	30	80	1800	1800			
	0.6	3728	1.0	3000	30	100	1800	1800			

(AGMA Class I = f_B 1.0 - 1.39 II = f_B 1.4 - 1.99 III = f_B ≥ 2.0)

Send Quote Requests to info@automatedpt.com
Call +1(800)985-6929 To Order or Order Online At Nordgearmotors.com

NORD DRIVESYSTEMS

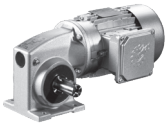

0.33 hp - MINICASE® Motorized C-Face Reducers

Motor Power P_1 [hp]	Output Speed n_2 [rpm]	Output Torque T_2 [lb-in]	Service Factor f_B	Total Ratio i_{tot}	Worm Ratio i_{worm}	2nd Ratio i_{2nd}	OHL F_R [lb]	OHL Flange Unit F_{RF} [lb]	Model Type	Approx. Weight [lb]	Dim. Page
0.33	342	54	3.8	5	5		248	173	SK 1SMI31 - 56C - 71S/4	16	176
	228	77	3.1	7.5	7.5		284	196			
	171	99	2.3	10	10		308	214			
	137	124	1.7	12.5	12.5		326	227			
	114	133	1.9	15	15		347	234			
	86	168	1.4	20	20		376	232			
	68	201	1.1	25	25		401	230			
	57	208	1.3	30	30		405	230			
	43	252	1.0	40	40		405	227			
	34	286	0.8	50	50		405	225			
	342	55	6.1	5	5		596	414	SK 1SMI40 - 56C - 71S/4	18	182
	228	79	4.9	7.5	7.5		682	414			
	171	103	3.6	10	10		720	414			
	137	124	2.9	12.5	12.5		720	414			
	114	141	3.1	15	15		720	414			
	86	178	2.2	20	20		720	414			
	68	213	1.7	25	25		720	414			
	57	226	2.0	30	30		720	412			
	43	277	1.5	40	40		720	412			
	34	321	1.2	50	50		720	410			
	29	356	1.0	60	60		720	410			
	21	415	0.8	80	80		720	407			
	342	56	10.4	5	5		1080	826	SK 1SMI50 - 56C - 71S/4	23	188
	228	82	8.5	7.5	7.5		1080	844			
	171	106	6.2	10	10		1080	844			
	137	124	5.2	12.5	12.5		1080	844			
	114	148	5.2	15	15		1080	842			
	86	190	3.8	20	20		1080	842			
	68	229	2.9	25	25		1080	842			
	57	245	3.3	30	30		1080	842			
	43	306	2.4	40	40		1080	842			
	34	358	1.9	50	50		1080	842			
	29	400	1.6	60	60		1080	839			
	21	474	1.2	80	80		1080	839			
	17	531	1.0	100	100		1080	837			
	342	57	14.3	5	5		1418	779	SK 1SMI63 - 56C - 71S/4	27	194
	228	83	14.3	7.5	7.5		1418	779			
	171	109	10.9	10	10		1418	779			
	137	124	9.2	12.5	12.5		1418	779			
	114	154	8.9	15	15		1418	779			
	86	198	6.4	20	20		1418	779			
	68	238	5.0	25	25		1418	779			
	57	259	5.5	30	30		1418	779			
	43	326	4.0	40	40		1418	779			
	34	383	3.2	50	50		1418	776			
	29	437	2.6	60	60		1418	776			
	21	524	2.0	80	80		1418	774			
	17	605	1.6	100	100		1418	774			

(AGMA Class I = f_B 1.0 - 1.39 II = f_B 1.4 - 1.99 III = f_B ≥ 2.0)

RATINGS

Send Quote Requests to info@automatedpt.com
Call +1(800)985-6929 To Order or Order Online At Nordgearmotors.com

0.33 hp - MINICASE® Motorized C-Face Reducers

DRIVESYSTEMS

RATINGS

Motor Power P_1 [hp]	Output Speed n_2 [rpm]	Output Torque T_2 [lb-in]	Service Factor f_B	Total Ratio i_{tot}	Worm Ratio i_{worm}	2nd Ratio i_{2nd}	OHL F_R [lb]	OHL Flange Unit F_{RF} [lb]	Model Type	Approx. Weight [lb]	Dim. Page
0.33	342	57	30.2	5	5		1800	1800	SK 1SMI75 - 56C - 71S/4	45	196
	228	84	24.6	7.5	7.5		1800	1800			
	171	111	18.1	10	10		1800	1800			
	137	124	15.5	12.5	12.5		1800	1800			
	114	158	14.8	15	15		1800	1800			
	86	205	10.6	20	20		1800	1800			
	68	250	8.1	25	25		1800	1800			
	57	259	7.4	30	30		1800	1800			
	43	346	6.4	40	40		1800	1800			
	34	414	5.0	50	50		1800	1800			
	29	474	4.1	60	60		1800	1800			
	21	583	3.1	80	80		1800	1800			
	17	667	2.5	100	100		1800	1800			
	34	500	1.1	50	5	10	720	403	SK 1SMI40/H10 - 56C - 71S/4	23	202
	23	704	0.9	75	7.5	10	720	389			
	34	513	1.8	50	5	10	1080	839	SK 1SMI50/H10 - 56C - 71S/4	27	202
	23	723	1.6	75	7.5	10	1080	835			
	17	927	1.2	100	10	10	1080	828			
	14	1128	0.9	125	12.5	10	1080	821			
	11	1223	1.0	150	15	10	1080	817			
	8.6	1507	0.8	200	20	10	1080	803			
	34	519	1.8	50	5	10	1418	774	SK 1SMI63/H10 - 56C - 71S/4	29	202
	23	732	1.8	75	7.5	10	1418	772			
	17	939	1.8	100	10	10	1418	765			
	14	1128	1.6	125	12.5	10	1418	758			
	11	1260	1.8	150	15	10	1418	754			
	8.6	1557	1.3	200	20	10	1418	740			
	6.8	1823	1.1	250	25	10	1418	725			
	5.7	1891	1.2	300	30	10	1418	720			
	4.3	2274	0.9	400	40	10	1415	691			
	3.4	2533	0.8	500	50	10	1368	668			
	11	778	0.8	150	30	5	720	383	SK 1SMI40/31 - 56C - 71S/4	23	204
	11	853	1.4	150	30	5	1080	830	SK 1SMI50/31 - 56C - 71S/4	27	204
	7.6	1140	1.1	225	30	7.5	1080	819			
	5.7	1446	0.9	300	30	10	1080	806			
	4.6	1483	0.9	375	30	12.5	1080	803			

(AGMA Class I = f_B 1.0 - 1.39 II = f_B 1.4 - 1.99 III = f_B ≥ 2.0)

Send Quote Requests to info@automatedpt.com
Call +1(800)985-6929 To Order or Order Online At Nordgearmotors.com

NORD DRIVESYSTEMS

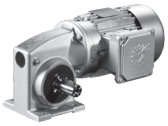

0.33 hp, 0.5 hp - MINICASE® Motorized C-Face Reducers

Motor Power P_1 [hp]	Output Speed n_2 [rpm]	Output Torque T_2 [lb-in]	Service Factor f_B	Total Ratio i_{tot}	Worm Ratio i_{worm}	2nd Ratio i_{2nd}	OHL F_R [lb]	OHL Flange Unit F_{RF} [lb]	Model Type	Approx. Weight [lb]	Dim. Page
0.33	11	890	2.4	150	30	5	1418	767	SK 1SMI63/31 - 56C - 71S/4	29	204
	7.6	1195	1.9	225	30	7.5	1418	756			
	5.7	1520	1.5	300	30	10	1418	740			
	4.6	1483	1.6	375	30	12.5	1418	743			
	3.8	1946	1.2	450	30	15	1418	716			
	2.9	2372	1.0	600	30	20	1397	682			
	2.3	2780	0.9	750	30	25	1316	641			
	1.9	2891	0.9	900	30	30	1289	630			
	1.4	3410	0.8	1200	30	40	1148	560			
	11	890	3.2	150	30	5	1800	1800	SK 1SMI75/40 - 56C - 71S/4	51	204
	7.6	1223	2.5	225	30	7.5	1800	1800			
	5.7	1557	2.0	300	30	10	1800	1800			
	4.6	1483	2.1	375	30	12.5	1800	1800			
	3.8	2002	1.6	450	30	15	1800	1800			
	2.9	2447	1.4	600	30	20	1800	1800			
	2.3	2873	1.2	750	30	25	1800	1800			
	1.9	3003	1.1	900	30	30	1800	1800			
	1.4	3559	1.0	1200	30	40	1800	1800			
	1.1	4078	0.9	1500	30	50	1800	1800			
	0.9	4448	0.8	1800	30	60	1800	1800			
	0.6	4819	0.8	3000	30	100	1800	1800			
0.5	344	79	2.6	5	5		241	167	SK 1SMI31 - 56C - 71L/4	18	176
	229	113	2.1	7.5	7.5		272	189			
	172	145	1.6	10	10		295	205			
	138	182	1.2	12.5	12.5		311	216			
	115	196	1.3	15	15		329	230			
	86	247	1.0	20	20		356	227			
	57	308	0.9	30	30		398	223			
	344	81	4.2	5	5		590	414	SK 1SMI40 - 56C - 71L/4	21	182
	229	116	3.4	7.5	7.5		673	414			
	172	151	2.5	10	10		720	414			
	138	182	2.0	12.5	12.5		720	414			
	115	207	2.1	15	15		720	414			
	86	262	1.5	20	20		720	412			
	69	314	1.2	25	25		720	410			
	57	333	1.3	30	30		720	410			
	43	407	1.0	40	40		720	407			
	34	473	0.8	50	50		720	403			

(AGMA Class I = f_B 1.0 - 1.39 II = f_B 1.4 - 1.99 III = f_B ≥ 2.0)

Send Quote Requests to info@automatedpt.com
Call +1(800)985-6929 To Order or Order Online At Nordgearmotors.com

0.5 hp - MINICASE® Motorized C-Face Reducers

NORD® DRIVESYSTEMS

RATINGS

Motor Power P_1 [hp]	Output Speed n_2 [rpm]	Output Torque T_2 [lb-in]	Service Factor f_B	Total Ratio i_{tot}	Worm Ratio i_{worm}	2nd Ratio i_{2nd}	OHL F_R [lb]	OHL Flange Unit F_{RF} [lb]	Model Type	Approx. Weight [lb]	Dim. Page
0.5	344	83	7.1	5	5		1080	821	SK 1SMI50 - 56C - 71L/4	25	188
	229	120	5.8	7.5	7.5		1080	844			
	172	156	4.2	10	10		1080	842			
	138	182	3.5	12.5	12.5		1080	842			
	115	218	3.5	15	15		1080	842			
	86	280	2.6	20	20		1080	842			
	69	336	2.0	25	25		1080	842			
	57	360	2.2	30	30		1080	842			
	43	451	1.6	40	40		1080	839			
	34	527	1.3	50	50		1080	837			
	29	589	1.1	60	60		1080	837			
	22	698	0.8	80	80		1080	835			
	344	84	9.7	5	5		1418	779	SK 1SMI63 - 56C - 71L/4	27	194
	229	123	9.7	7.5	7.5		1418	779			
	172	160	7.4	10	10		1418	779			
	138	182	6.3	12.5	12.5		1418	779			
	115	226	6.1	15	15		1418	779			
	86	291	4.4	20	20		1418	779			
	69	350	3.4	25	25		1418	779			
	57	382	3.7	30	30		1418	776			
	43	480	2.7	40	40		1418	776			
	34	564	2.2	50	50		1418	774			
	29	644	1.8	60	60		1418	772			
	22	771	1.4	80	80		1418	770			
	17	891	1.1	100	100		1418	767			
	344	85	20.5	5	5		1800	1800	SK 1SMI75 - 56C - 71L/4	47	196
	229	124	16.7	7.5	7.5		1800	1800			
	172	164	12.3	10	10		1800	1800			
	138	182	10.5	12.5	12.5		1800	1800			
	115	232	10.1	15	15		1800	1800			
	86	302	7.2	20	20		1800	1800			
	69	368	5.5	25	25		1800	1800			
	57	382	5.1	30	30		1800	1800			
	43	509	4.3	40	40		1800	1800			
	34	609	3.4	50	50		1800	1800			
	29	698	2.8	60	60		1800	1800			
	22	858	2.1	80	80		1800	1800			
	17	982	1.7	100	100		1800	1800			
	34	755	1.2	50	5	10	1080	833	SK 1SMI50/H10 - 56C - 71L/4	27	202
	23	1064	1.1	75	7.5	10	1080	824			
	17	1364	0.8	100	10	10	1080	810			
	34	764	1.2	50	5	10	1418	770	SK 1SMI63/H10 - 56C - 71L/4	32	202
	23	1077	1.2	75	7.5	10	1418	761			
	17	1382	1.2	100	10	10	1418	747			
	14	1659	1.1	125	12.5	10	1418	734			
	11	1854	1.2	150	15	10	1418	722			
	8.6	2291	0.9	200	20	10	1411	689			
	5.7	2782	0.8	300	30	10	1316	641			

(AGMA Class I = f_B 1.0 - 1.39 II = f_B 1.4 - 1.99 III = f_B ≥ 2.0)

Send Quote Requests to info@automatedpt.com
Call +1(800)985-6929 To Order or Order Online At Nordgearmotors.com

NORD DRIVESYSTEMS

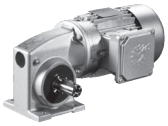

0.5 hp , 0.75 hp - MINICASE® Motorized C-Face Reducers

Motor Power P_1 [hp]	Output Speed n_2 [rpm]	Output Torque T_2 [lb-in]	Service Factor f_B	Total Ratio i_{tot}	Worm Ratio i_{worm}	2nd Ratio i_{2nd}	OHL F_R [lb]	OHL Flange Unit F_{RF} [lb]	Model Type	Approx. Weight [lb]	Dim. Page
0.5	11	1254	0.9	150	30	5	1080	815	SK 1SMI50/31 - 56C - 71L/4	27	204
	11	1309	1.6	150	30	5	1418	752	SK 1SMI63/31 - 56C - 71L/4	31	204
	7.6	1759	1.3	225	30	7.5	1418	727			
	5.7	2236	1.0	300	30	10	1418	693			
	4.6	2182	1.1	375	30	12.5	1418	698			
	3.8	2864	0.8	450	30	15	1296	632			
	11	1309	2.2	150	30	5	1800	1800	SK 1SMI75/40 - 56C - 71L/4	49	204
	7.6	1800	1.7	225	30	7.5	1800	1800			
	5.7	2291	1.4	300	30	10	1800	1800			
	4.6	2182	1.5	375	30	12.5	1800	1800			
	3.8	2945	1.1	450	30	15	1800	1800			
	2.9	3600	0.9	600	30	20	1800	1800			
	2.3	4227	0.8	750	30	25	1800	1800			
	1.9	4418	0.8	900	30	30	1800	1800			
0.75	342	123	2.7	5	5		583	414	SK 1SMI40 - 56C - 80S/4	27	182
	228	176	2.2	7.5	7.5		662	414			
	171	230	1.6	10	10		720	412			
	137	277	1.3	12.5	12.5		720	412			
	114	316	1.4	15	15		720	410			
	86	399	1.0	20	20		720	407			
	68	477	0.8	25	25		720	403			
	57	507	0.9	30	30		720	403			
	342	126	4.6	5	5		1080	817	SK 1SMI50 - 56C - 80S/4	32	188
	228	183	3.8	7.5	7.5		1080	842			
	171	238	2.8	10	10		1080	842			
	137	277	2.3	12.5	12.5		1080	842			
	114	332	2.3	15	15		1080	842			
	86	426	1.7	20	20		1080	839			
	68	512	1.3	25	25		1080	839			
	57	548	1.5	30	30		1080	837			
	43	686	1.1	40	40		1080	835			
	34	803	0.8	50	50		1080	833			
	342	127	6.4	5	5		1418	779	SK 1SMI63 - 56C - 80S/4	34	194
	228	187	6.4	7.5	7.5		1418	779			
	171	244	4.9	10	10		1418	779			
	137	277	4.1	12.5	12.5		1418	779			
	114	345	4.0	15	15		1418	779			
	86	443	2.9	20	20		1418	776			
	68	533	2.2	25	25		1418	774			
	57	581	2.4	30	30		1418	774			
	43	731	1.8	40	40		1418	772			
	34	858	1.4	50	50		1418	767			
	29	980	1.2	60	60		1418	763			
	21	1174	0.9	80	80		1418	756			

(AGMA Class I = f_B 1.0 - 1.39 II = f_B 1.4 - 1.99 III = f_B ≥ 2.0)

RATINGS

Send Quote Requests to info@automatedpt.com
Call +1(800)985-6929 To Order or Order Online At Nordgearmotors.com

0.75 hp, 1.0 hp - MINICASE® Motorized C-Face Reducers

NORD® DRIVESYSTEMS

RATINGS

Motor Power P_1 [hp]	Output Speed n_2 [rpm]	Output Torque T_2 [lb-in]	Service Factor f_B	Total Ratio i_{tot}	Worm Ratio i_{worm}	2nd Ratio i_{2nd}	OHL F_R [lb]	OHL Flange Unit F_{RF} [lb]	Model Type	Approx. Weight [lb]	Dim. Page
0.75	342	129	13.5	5	5		1800	1800	SK 1SMI75 - 56C - 80S/4	54	196
	228	189	11.0	7.5	7.5		1800	1800			
	171	249	8.1	10	10		1800	1800			
	137	277	6.9	12.5	12.5		1800	1800			
	114	353	6.6	15	15		1800	1800			
	86	459	4.7	20	20		1800	1800			
	68	560	3.6	25	25		1800	1800			
	57	581	3.3	30	30		1800	1800			
	43	775	2.9	40	40		1800	1800			
	34	927	2.2	50	50		1800	1800			
	29	1063	1.8	60	60		1800	1800			
	21	1306	1.4	80	80		1800	1800			
	17	1495	1.1	100	100		1800	1800			
	11	1993	1.4	150	30	5	1800	1800	SK 1SMI75/40 - 56C - 80S/4	56	204
	7.6	2740	1.1	225	30	7.5	1800	1800			
	5.7	3487	0.9	300	30	10	1800	1800			
	4.6	3321	1.0	375	30	12.5	1800	1800			
1.0	330	171	2.0	5	5		576	414	SK 1SMI40 - 56C - 80L/4	30	182
	220	245	1.6	7.5	7.5		655	412	SK 1SMI40 - 56C - 80LH/4		
	165	319	1.2	10	10		713	410	SK 1SMI40 - 56C - 80LP/4		
	132	384	0.9	12.5	12.5		720	407			
	110	438	1.0	15	15		720	405			
	350	161	2.1	5	5		576	414	SK 1SMI40 - 140TC - 80LH/4	30	182
	233	231	1.7	7.5	7.5		655	412	SK 1SMI40 - 140TC - 80LP/4		
	175	301	1.2	10	10		713	410			
	140	362	1.0	12.5	12.5		720	407			
	117	412	1.1	15	15		720	405			
	330	175	3.3	5	5		1080	819	SK 1SMI50 - 56C - 80L/4	34	188
	220	254	2.7	7.5	7.5		1080	842	SK 1SMI50 - 56C - 80LH/4		
	165	330	2.0	10	10		1080	842	SK 1SMI50 - 56C - 80LP/4		
	132	384	1.7	12.5	12.5		1080	839			
	110	461	1.7	15	15		1080	839			
	83	592	1.2	20	20		1080	837			
	66	711	0.9	25	25		1080	835			
	55	761	1.0	30	30		1080	833			
	41	953	0.8	40	40		1080	828			
	350	165	3.5	5	5		1080	819	SK 1SMI50 - 140TC - 80LH/4	34	188
	233	240	2.9	7.5	7.5		1080	842	SK 1SMI50 - 140TC - 80LP/4		
	175	311	2.1	10	10		1080	842			
	140	362	1.8	12.5	12.5		1080	839			
	117	433	1.8	15	15		1080	839			
	88	555	1.3	20	20		1080	837			
	70	670	1.0	25	25		1080	835			
	58	722	1.1	30	30		1080	833			
	44	888	0.8	40	40		1080	828			

(Model type in blue is an energy efficient motor)
(Model type in light blue is a premium efficient motor)

(AGMA Class I = f_B 1.0 - 1.39 II = f_B 1.4 - 1.99 III = f_B ≥ 2.0)

Send Quote Requests to info@automatedpt.com
Call +1(800)985-6929 To Order or Order Online At Nordgearmotors.com

NORD DRIVESYSTEMS

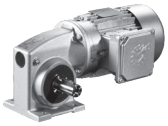

1.0 hp - MINICASE® Motorized C-Face Reducers

Motor Power P_1 [hp]	Output Speed n_2 [rpm]	Output Torque T_2 [lb-in]	Service Factor f_B	Total Ratio i_{tot}	Worm Ratio i_{worm}	2nd Ratio i_{2nd}	OHL F_R [lb]	OHL Flange Unit F_{RF} [lb]	Model Type	Approx. Weight [lb]	Dim. Page
1.0	330	177	4.6	5	5		1418	779	SK 1SMI63 - 56C - 80L/4	36	194
	220	259	4.6	7.5	7.5		1418	779	SK 1SMI63 - 56C - 80LH/4		
	165	338	3.5	10	10		1418	779	SK 1SMI63 - 56C - 80LP/4		
	132	384	3.0	12.5	12.5		1418	776			
	110	478	2.9	15	15		1418	776			
	83	615	2.1	20	20		1418	774			
	66	740	1.6	25	25		1418	770			
	55	807	1.8	30	30		1418	770			
	41	1014	1.3	40	40		1418	763			
	33	1191	1.0	50	50		1418	756			
	28	1360	0.8	60	60		1418	749			
	350	167	6.3	5	5		1418	779	SK 1SMI63 - 140TC - 80LH/4	36	194
	233	245	5.0	7.5	7.5		1418	779	SK 1SMI63 - 140TC - 80LP/4		
	175	319	3.7	10	10		1418	779			
	140	362	3.2	12.5	12.5		1418	776			
	117	449	3.1	15	15		1418	776			
	88	577	2.2	20	20		1418	774			
	70	698	1.7	25	25		1418	770			
	58	765	1.9	30	30		1418	770			
	44	951	1.4	40	40		1418	763			
	35	1123	1.1	50	50		1418	756			
	29	1290	0.9	60	60		1418	749			
	330	179	9.7	5	5		1800	1800	SK 1SMI75 - 56C - 80L/4	56	196
	220	262	7.9	7.5	7.5		1800	1800	SK 1SMI75 - 56C - 80LH/4		
	165	346	5.8	10	10		1800	1800	SK 1SMI75 - 56C - 80LP/4		
	132	384	5.0	12.5	12.5		1800	1800			
	110	490	4.8	15	15		1800	1800			
	83	638	3.4	20	20		1800	1800			
	66	778	2.6	25	25		1800	1800			
	55	807	2.4	30	30		1800	1800			
	41	1076	2.1	40	40		1800	1800			
	33	1287	1.6	50	50		1800	1800			
	28	1475	1.3	60	60		1800	1800			
	21	1813	1.0	80	80		1800	1800			
	17	2075	0.8	100	100		1800	1800			
	350	169	10.2	5	5		1800	1800	SK 1SMI75 - 140TC - 80LH/4	56	196
	233	247	8.3	7.5	7.5		1800	1800	SK 1SMI75 - 140TC - 80LP/4		
	175	326	6.1	10	10		1800	1800			
	140	362	5.3	12.5	12.5		1800	1800			
	117	461	5.0	15	15		1800	1800			
	88	598	3.6	20	20		1800	1800			
	70	734	2.8	25	25		1800	1800			
	58	765	2.5	30	30		1800	1800			
	44	1009	2.2	40	40		1800	1800			
	35	1214	1.7	50	50		1800	1800			
	29	1399	1.4	60	60		1800	1800			
	22	1700	1.0	80	80		1800	1800			
	18	1902	0.9	100	100		1800	1800			

(Model type in blue is an energy efficient motor)
(Model type in light blue is a premium efficient motor)

(AGMA Class I = f_B 1.0 - 1.39 II = f_B 1.4 - 1.99 III = f_B ≥ 2.0)

RATINGS

Send Quote Requests to info@automatedpt.com
Call +1(800)985-6929 To Order or Order Online At Nordgearmotors.com

1.0 hp, 1.5 hp, 2.0 hp - MINICASE® Motorized C-Face Reducers

NORD DRIVESYSTEMS

RATINGS

Motor Power P_1 [hp]	Output Speed n_2 [rpm]	Output Torque T_2 [lb-in]	Service Factor f_B	Total Ratio i_{tot}	Worm Ratio i_{worm}	2nd Ratio i_{2nd}	OHL F_R [lb]	OHL Flange Unit F_{RF} [lb]	Model Type	Approx. Weight [lb]	Dim. Page
1.0	11	2766	1.0	150	30	5	1800	1800	SK 1SMI75/40 - 56C - 80L/4	58	202
	7.3	3803	0.8	225	30	7.5	1800	1800	SK 1SMI75/40 - 56C - 80LH/4		
									SK 1SMI75/40 - 56C - 80LP/4		
	12	2536	1.1	150	30	5	1800	1800	SK 1SMI75/40 - 140TC - 80LH/4	61	202
	8	3486	0.9	225	30	7.5	1800	1800	SK 1SMI75/40 - 140TC - 80LP/4		
1.5	348	242	1.4	5	5		554	403	SK 1SMI40 - 140TC - 90SH/4	42	182
	232	347	1.1	7.5	7.5		628	410	SK 1SMI40 - 140TC - 90SP/4		
	174	451	0.8	10	10		677	403			
	348	247	2.4	5	5		1078	803	SK 1SMI50 - 140TC - 90SH/4	49	188
	232	359	1.9	7.5	7.5		1080	842	SK 1SMI50 - 140TC - 90SP/4		
	174	468	1.4	10	10		1080	839			
	139	545	1.2	12.5	12.5		1080	837			
	116	655	1.2	15	15		1080	835			
	87	838	0.9	20	20		1080	830			
	348	250	4.2	5	5		1418	779	SK 1SMI63 - 140TC - 90SH/4	51	194
	232	354	3.5	7.5	7.5		1418	776	SK 1SMI63 - 140TC - 90SP/4		
	174	479	2.5	10	10		1418	776			
	139	545	2.1	12.5	12.5		1418	774			
	116	677	2.0	15	15		1418	772			
	87	870	1.5	20	20		1418	765			
	70	1042	1.1	25	25		1418	761			
	58	1143	1.2	30	30		1418	756			
	44	1437	0.9	40	40		1418	743			
	348	253	6.8	5	5		1800	1800	SK 1SMI75 - 140TC - 90SH/4	71	196
	232	371	5.5	7.5	7.5		1800	1800	SK 1SMI75 - 140TC - 90SP/4		
	174	489	4.1	10	10		1800	1800			
	139	545	3.5	12.5	12.5		1800	1800			
	116	694	3.3	15	15		1800	1800			
	87	904	2.4	20	20		1800	1800			
	70	1096	1.8	25	25		1800	1800			
	58	1143	1.7	30	30		1800	1800			
	44	1506	1.5	40	40		1800	1800			
	35	1812	1.1	50	50		1800	1800			
	29	2089	0.9	60	60		1800	1800			
2.0	349	328	1.8	5	5		1060	792	SK 1SMI50 - 140TC - 90LH/4	49	188
	233	475	1.5	7.5	7.5		1080	839	SK 1SMI50 - 140TC - 90LP/4		
	175	619	1.1	10	10		1080	835			
	140	721	0.9	12.5	12.5		1080	833			
	116	871	0.9	15	15		1080	828			

(Model type in blue is an energy efficient motor)
(Model type in light blue is a premium efficient motor)

(AGMA Class I = f_B 1.0 - 1.39 II = f_B 1.4 - 1.99 III = f_B ≥ 2.0)

Send Quote Requests to info@automatedpt.com
Call +1(800)985-6929 To Order or Order Online At Nordgearmotors.com

NORD DRIVESYSTEMS

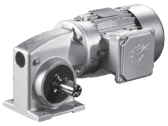

2.0 hp, 3.0 hp, 5.0 hp - MINICASE® Motorized C-Face Reducers

Motor Power P_1 [hp]	Output Speed n_2 [rpm]	Output Torque T_2 [lb-in]	Service Factor f_B	Total Ratio i_{tot}	Worm Ratio i_{worm}	2nd Ratio i_{2nd}	OHL F_R [lb]	OHL Flange Unit F_{RF} [lb]	Model Type	Approx. Weight [lb]	Dim. Page
2.0	349	332	3.1	5	5		1418	779	SK 1SMI63 - 140TC - 90LH/4	51	194
	233	486	2.5	7.5	7.5		1418	776	SK 1SMI63 - 140TC - 90LP/4		
	175	634	1.9	10	10		1418	772			
	140	720	1.6	12.5	12.5		1418	770			
	116	901	1.5	15	15		1418	765			
	87	1158	1.1	20	20		1418	756			
	70	1385	0.9	25	25		1418	745			
	58	1520	0.9	30	30		1418	738			
	349	336	5.1	5	5		1800	1800	SK 1SMI75 - 140TC - 90LH/4	71	196
	233	492	4.2	7.5	7.5		1800	1800	SK 1SMI75 - 140TC - 90LP/4		
	175	648	3.1	10	10		1800	1800			
	140	720	2.7	12.5	12.5		1800	1800			
	116	923	2.5	15	15		1800	1800			
	87	1201	1.8	20	20		1800	1800			
	70	1448	1.4	25	25		1800	1800			
	58	1520	1.3	30	30		1800	1800			
	44	2003	1.1	40	40		1800	1800			
	35	2410	0.8	50	50		1800	1800			
3.0	353	499	3.4	5	5		1800	1773	SK 1SMI75 - 180TC - 100LH/4	101	196
	235	733	2.8	7.5	7.5		1800	1800	SK 1SMI75 - 180TC - 100LP/4		
	177	962	2.1	10	10		1800	1800			
	141	1074	1.8	12.5	12.5		1800	1800			
	118	1364	1.7	15	15		1800	1800			
	88	1785	1.2	20	20		1800	1800			
	71	2160	0.9	25	25		1800	1800			
	59	2244	0.9	30	30		1800	1800			
5.0	354	828	2.1	5	5		1800	1730	SK 1SMI75 - 180TC - 112MH/4	109	196
	236	1215	1.7	7.5	7.5		1800	1800	SK 1SMI75 - 180TC - 112MP/4		
	177	1603	1.2	10	10		1800	1800			
	142	1777	1.1	12.5	12.5		1800	1800			
	118	2270	1.0	15	15		1800	1800			

(Model type in blue is an energy efficient motor)
(Model type in light blue is a premium efficient motor)

(AGMA Class I = f_B 1.0 - 1.39 II = f_B 1.4 - 1.99 III = f_B ≥ 2.0)

RATINGS

Send Quote Requests to info@automatedpt.com
Call +1(800)985-6929 To Order or Order Online At Nordgearmotors.com

MINICASE®
Single Worm Ratings

NORD® DRIVESYSTEMS

RATINGS

Gearbox Size					SK 1SMI31			SK 1SMI40			SK 1SMI50			SK 1SMI63			SK 1SMI75		
Total Ratio	Worm Ratio	2nd Ratio	Input	Output	Max Input	Max Output	Torque	Max Input	Max Output	Torque	Max Input	Max Output	Torque	Max Input	Max Output	Torque	Max Input	Max Output	Torque
i	i_{worm}	i_{2nd}	n_1 [rpm]	n_2 [rpm]	P_{1max} [hp]	P_{2max} [hp]	T_{2max} [lb-in]	P_{1max} [hp]	P_{2max} [hp]	T_{2max} [lb-in]	P_{1max} [hp]	P_{2max} [hp]	T_{2max} [lb-in]	P_{1max} [hp]	P_{2max} [hp]	T_{2max} [lb-in]	P_{1max} [hp]	P_{2max} [hp]	T_{2max} [lb-in]
5	5	-	1750	350	1.30	1.13	204	2.10	1.87	336	3.56	3.24	584	6.30	5.80	1044	10.36	9.64	1735
			1150	230	0.94	0.81	221	1.51	1.33	364	2.56	2.30	630	4.52	4.11	1127	7.35	6.77	1854
			850	170	0.77	0.66	243	1.24	1.08	401	2.10	1.87	694	3.72	3.34	1240	5.98	5.51	2041
			100	20	0.13	0.11	341	0.22	0.18	562	0.37	0.31	974	0.66	0.55	1740	1.07	0.91	2864
7.5	7.5	-	1750	233	1.06	0.88	239	1.69	1.44	389	2.90	2.55	690	5.05	4.55	1230	8.41	7.67	2071
			1150	153	0.76	0.62	255	1.22	1.03	423	2.11	1.82	747	3.68	3.24	1332	5.98	5.40	2218
			850	113	0.62	0.51	281	1.01	0.84	466	1.74	1.48	823	3.02	2.64	1466	4.92	4.39	2441
			100	13	0.11	0.08	394	0.18	0.14	653	0.31	0.24	1154	0.54	0.44	2058	0.88	0.72	3426
10	10	-	1750	175	0.80	0.64	230	1.24	1.03	372	2.14	1.84	664	3.74	3.29	1186	6.20	5.58	2009
			1150	115	0.56	0.45	244	0.90	0.74	406	1.57	1.32	721	2.69	2.34	1285	4.40	3.92	2147
			850	85	0.46	0.36	269	0.75	0.60	446	1.29	1.07	794	2.24	1.91	1414	3.66	3.19	2363
			100	10	0.08	0.06	377	0.14	0.10	627	0.24	0.18	1114	0.41	0.31	1984	0.68	0.53	3317
12.5	12.5	-	1750	140	0.61	0.47	212	1.00	0.81	363	1.69	1.41	637	2.91	2.54	1142	4.77	4.25	1912
			1150	92	0.45	0.34	233	0.72	0.57	388	1.23	1.01	693	2.12	1.80	1233	3.46	3.01	2065
			850	68	0.37	0.28	257	0.59	0.46	427	1.02	0.82	762	1.74	1.46	1357	2.85	2.45	2273
			100	8	0.07	0.05	360	0.11	0.08	599	0.19	0.14	1070	0.33	0.24	1904	0.55	0.40	3190
15	15	-	1750	117	0.66	0.48	257	1.06	0.80	434	1.79	1.43	770	3.07	2.54	1372	5.10	4.32	2336
			1150	77	0.49	0.34	280	0.77	0.57	466	1.31	1.02	836	2.24	1.81	1487	3.68	3.04	2498
			850	57	0.40	0.28	308	0.64	0.46	513	1.10	0.83	920	1.87	1.47	1637	3.03	2.47	2750
			100	7	0.07	0.05	433	0.12	0.08	720	0.21	0.14	1292	0.36	0.24	2297	0.60	0.41	3859
20	20	-	1750	88	0.49	0.33	239	0.77	0.55	398	1.30	1.00	717	2.22	1.77	1274	3.65	3.01	2168
			1150	58	0.36	0.24	259	0.57	0.39	432	0.96	0.71	776	1.63	1.26	1380	2.64	2.12	2320
			850	43	0.30	0.19	285	0.47	0.32	475	0.79	0.58	854	1.33	1.02	1518	2.15	1.72	2553
			100	5	0.01	0.03	401	0.09	0.05	667	0.16	0.10	1198	0.27	0.17	2131	0.44	0.28	3583
25	25	-	1750	70	0.38	0.25	221	0.60	0.41	372	1.01	0.75	673	1.72	1.33	1195	2.79	2.26	2036
			1150	46	0.29	0.18	243	0.45	0.30	405	0.75	0.53	729	1.26	0.95	1296	2.04	1.59	2180
			850	34	0.24	0.14	268	0.38	0.24	446	0.63	0.43	802	1.05	0.77	1426	1.70	1.29	2399
			100	4	0.04	0.02	376	0.07	0.04	626	0.13	0.07	1126	0.22	0.13	2001	0.36	0.21	3367
					SK 1SMI31 Dimensions			SK 1SMI40 Dimensions			SK 1SMI50 Dimensions			SK 1SMI63 Dimensions			SK 1SMI75 Dimensions		
					172			178			184			190			196		

Actual speeds and torques will vary based on the motor performance data.

Send Quote Requests to info@automatedpt.com
Call +1(800)985-6929 To Order or Order Online At Nordgearmotors.com

NORD DRIVESYSTEMS

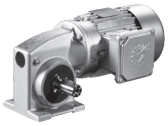

MINICASE®
Single Worm Ratings

Gearbox Size					SK 1SMI31			SK 1SMI40			SK 1SMI50			SK 1SMI63			SK 1SMI75		
Total Ratio	Worm Ratio	2nd Ratio	Input	Output	Max Input	Max Output	Torque	Max Input	Max Output	Torque	Max Input	Max Output	Torque	Max Input	Max Output	Torque	Max Input	Max Output	Torque
i	i_{worm}	i_{2nd}	n_1 [rpm]	n_2 [rpm]	P_{1max} [hp]	P_{2max} [hp]	T_{2max} [lb-in]	P_{1max} [hp]	P_{2max} [hp]	T_{2max} [lb-in]	P_{1max} [hp]	P_{2max} [hp]	T_{2max} [lb-in]	P_{1max} [hp]	P_{2max} [hp]	T_{2max} [lb-in]	P_{1max} [hp]	P_{2max} [hp]	T_{2max} [lb-in]
30	30	-	1750	58	0.44	0.25	266	0.67	0.41	442	1.11	0.74	796	1.86	1.31	1416	2.25	1.79	1929
			1150	38	0.32	0.17	287	0.50	0.29	478	0.82	0.52	861	1.38	0.93	1531	1.64	1.26	2067
			850	28	0.27	0.14	316	0.42	0.24	527	0.69	0.43	948	1.15	0.76	1685	1.38	1.02	2275
			100	3	0.05	0.02	443	0.08	0.04	739	0.15	0.07	1330	0.25	0.13	2365	0.30	0.17	3192
40	40	-	1750	44	0.34	0.17	248	0.51	0.28	407	0.83	0.51	735	1.38	0.90	1301	2.21	1.54	2212
			1150	29	0.25	0.12	263	0.38	0.20	439	0.63	0.36	790	1.03	0.64	1405	1.63	1.08	2367
			850	21	0.21	0.10	290	0.32	0.16	483	0.52	0.29	870	0.86	0.52	1547	1.36	0.88	2605
			100	3	0.04	0.02	407	0.07	0.03	678	0.11	0.05	1221	0.20	0.09	2170	0.32	0.14	3655
50	50	-	1750	35	0.27	0.13	230	0.41	0.21	381	0.65	0.38	681	1.09	0.67	1212	1.71	1.15	2062
			1150	23	0.20	0.09	246	0.31	0.15	410	0.50	0.27	738	0.81	0.48	1312	1.28	0.81	2210
			850	17	0.17	0.07	271	0.26	0.12	451	0.42	0.22	812	0.70	0.39	1444	1.09	0.66	2432
			100	2	0.03	0.01	380	0.06	0.02	633	0.09	0.04	1140	0.16	0.06	2027	0.26	0.11	3413
60	60	-	1750	29	0.23	0.10	212	0.34	0.16	354	0.55	0.30	646	0.90	0.53	1150	1.41	0.91	1956
			1150	19	0.17	0.07	232	0.26	0.12	387	0.41	0.21	697	0.68	0.38	1239	1.05	0.63	2088
			850	14	0.15	0.06	256	0.22	0.10	426	0.36	0.17	767	0.58	0.31	1364	0.90	0.52	2298
			100	2	0.03	0.01	359	0.05	0.02	598	0.08	0.03	1077	0.14	0.05	1914	0.23	0.09	3225
80	80	-	1750	22	0.18	0.07	195	0.27	0.11	327	0.43	0.21	593	0.69	0.36	1044	1.05	0.62	1779
			1150	14	0.13	0.05	212	0.20	0.08	353	0.31	0.15	636	0.50	0.26	1131	0.77	0.43	1906
			850	11	0.12	0.04	233	0.18	0.07	389	0.29	0.12	700	0.47	0.21	1245	0.72	0.35	2098
			100	1	0.02	0.01	327	0.04	0.01	545	0.06	0.02	983	0.11	0.03	1748	0.17	0.06	2944
100	100	-	1750	18	0.17	0.05	186	0.23	0.08	301	0.36	0.15	549	0.57	0.27	974	0.88	0.46	1655
			1150	12	0.13	0.04	197	0.18	0.06	329	0.28	0.11	592	0.45	0.19	1053	0.68	0.32	1774
			850	9	0.10	0.03	217	0.15	0.05	362	0.24	0.09	652	0.37	0.16	1159	0.57	0.26	1953
			100	1	0.02	0.005	305	0.03	0.01	508	0.06	0.01	915	0.10	0.03	1627	0.16	0.04	2740
					SK 1SMI31 Dimensions			SK 1SMI40 Dimensions			SK 1SMI50 Dimensions			SK 1SMI63 Dimensions			SK 1SMI75 Dimensions		
					📖 172			📖 178			📖 184			📖 190			📖 196		

RATINGS

Actual speeds and torques will vary based on the motor performance data.

Send Quote Requests to info@automatedpt.com
Call +1(800)985-6929 To Order or Order Online At Nordgearmotors.com

MINICASE® 2-Stage Helical Worm Ratings

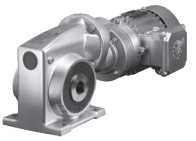

NORD® DRIVESYSTEMS

RATINGS

Gearbox Size					SK 1SMI40/H10			SK 1SMI50/H10			SK 1SMI63/H10		
Total Ratio	Worm Ratio	2nd Ratio	Input	Output	Max Input	Max Output	Torque	Max Input	Max Output	Torque	Max Input	Max Output	Torque
i	i_{worm}	i_{2nd}	n_1 [rpm]	n_2 [rpm]	P_{1max} [hp]	P_{2max} [hp]	T_{2max} [lb-in]	P_{1max} [hp]	P_{2max} [hp]	T_{2max} [lb-in]	P_{1max} [hp]	P_{2max} [hp]	T_{2max} [lb-in]
50	5	10	1750	35	0.38	0.30	549	0.50	0.41	742	0.50	0.42	751
			1150	23	0.25	0.20	557	0.43	0.35	964	0.50	0.41	1115
			850	17	0.19	0.15	573	0.33	0.27	993	0.50	0.41	1508
			100	2	0.03	0.02	673	0.05	0.04	1166	0.08	0.07	2084
75	7.5	10	1750	23.3	0.31	0.24	637	0.50	0.39	1061	0.50	0.40	1074
			1150	15.3	0.21	0.16	647	0.35	0.28	1143	0.50	0.40	1626
			850	11.3	0.16	0.12	666	0.27	0.21	1177	0.48	0.38	2098
			100	1.3	0.02	0.02	782	0.04	0.03	1383	0.07	0.05	2464
100	10	10	1750	17.5	0.24	0.17	611	0.41	0.30	1080	0.50	0.37	1320
			1150	11.5	0.16	0.11	620	0.28	0.20	1103	0.50	0.36	1954
			850	8.5	0.12	0.09	639	0.21	0.15	1136	0.37	0.27	2024
			100	1.0	0.02	0.01	750	0.03	0.02	1334	0.05	0.04	2376
125	12.5	10	1750	14.0	0.19	0.13	584	0.32	0.23	1044	0.50	0.36	1631
			1150	9.2	0.13	0.09	593	0.22	0.15	1059	0.38	0.28	1885
			850	6.8	0.10	0.07	611	0.17	0.12	1091	0.30	0.21	1942
			100	0.8	0.01	0.01	718	0.02	0.02	1281	0.04	0.03	2280
150	15	10	1750	11.7	0.21	0.13	699	0.36	0.23	1257	0.50	0.33	1772
			1150	7.7	0.14	0.09	713	0.24	0.16	1278	0.42	0.28	2274
			850	5.7	0.11	0.07	735	0.19	0.12	1317	0.33	0.21	2343
			100	0.7	0.02	0.01	863	0.03	0.02	1547	0.05	0.03	2751
200	20	10	1750	8.8	0.15	0.09	646	0.27	0.16	1168	0.46	0.29	2071
			1150	5.8	0.10	0.06	660	0.18	0.11	1186	0.32	0.19	2109
			850	4.3	0.08	0.05	680	0.14	0.10	1435	0.24	0.15	2173
			100	1	0.01	0.01	799	0.02	0.01	799	0.04	0.02	2552
250	25	10	1750	7	0.12	0.07	611	0.21	0.12	1097	0.37	0.22	1947
			1150	5	0.09	0.05	619	0.15	0.08	1114	0.25	0.14	1981
			850	3	0.06	0.03	638	0.11	0.06	1148	0.20	0.11	2041
			100	0.4	0.01	0.00	749	0.02	0.009	1348	0.03	0.02	2396
					SK1SMI40/H10 Dimensions			SK1SMI50/H10 Dimensions			SK1SMI63/H10 Dimensions		
					📖 202			📖 202			📖 202		

Actual speeds and torques will vary based on the motor performance data.

Send Quote Requests to info@automatedpt.com
Call +1(800)985-6929 To Order or Order Online At Nordgearmotors.com

NORD DRIVESYSTEMS

MINICASE® 2-Stage Helical Worm Ratings

Gearbox Size					SK 1SMI40/H10			SK 1SMI50/H10			SK 1SMI63/H10		
Total Ratio	Worm Ratio	2nd Ratio	Input	Output	Max Input	Max Output	Torque	Max Input	Max Output	Torque	Max Input	Max Output	Torque
i	i_{worm}	i_{2nd}	n_1 [rpm]	n_2 [rpm]	P_{1max} [hp]	P_{2max} [hp]	T_{2max} [lb-in]	P_{1max} [hp]	P_{2max} [hp]	T_{2max} [lb-in]	P_{1max} [hp]	P_{2max} [hp]	T_{2max} [lb-in]
300	30	10	1750	5.8	0.14	0.07	717	0.24	0.12	1292	0.42	0.21	2301
			1150	3.8	0.10	0.04	731	0.17	0.08	1317	0.29	0.14	2341
			850	2.8	0.08	0.03	754	0.13	0.06	1356	0.22	0.11	2411
			100	0.3	0.01	0.005	885	0.02	0.008	1593	0.03	0.01	2832
400	40	10	1750	4.4	0.11	0.05	664	0.19	0.08	1186	0.32	0.15	2115
			1150	2.9	0.08	0.03	671	0.13	0.06	1208	0.22	0.10	2148
			850	2.1	0.06	0.02	691	0.10	0.04	1245	0.18	0.07	2213
			100	0.3	0.01	0.003	812	0.01	0.006	1462	0.03	0.01	2599
500	50	10	1750	4	0.09	0.03	620	0.15	0.06	1106	0.27	0.11	1974
			1150	2	0.06	0.02	626	0.11	0.04	1129	0.19	0.07	2006
			850	2	0.05	0.02	645	0.08	0.03	1163	0.15	0.06	2067
			100	0.2	0.01	0.002	758	0.01	0.004	1365	0.02	0.01	2427
600	60	10	1750	2.9	0.08	0.03	584	0.13	0.05	1044	0.23	0.09	1859
			1150	1.9	0.06	0.02	592	0.09	0.03	1066	0.16	0.06	1895
			850	1.4	0.04	0.01	610	0.07	0.02	1098	0.12	0.04	1952
			100	0.2	0.01	0.002	716	0.01	0.003	1290	0.02	0.01	2293
800	80	10	1750	2.2	0.07	0.02	531	0.11	0.03	956	0.19	0.06	1699
			1150	1.4	0.04	0.01	540	0.07	0.02	973	0.12	0.04	1730
			850	1.1	0.04	0.01	556	0.06	0.02	1002	0.10	0.03	1782
			100	0.1	0.00	0.001	653	0.01	0.002	1177	0.01	0.004	2093
1000	100	10	1750	1.8	0.06	0.01	487	0.09	0.02	894	0.16	0.04	1584
			1150	1.2	0.04	0.01	502	0.07	0.02	905	0.11	0.03	1610
			850	0.9	0.03	0.01	518	0.05	0.01	933	0.09	0.02	1659
			100	0.1	0.00	0.001	608	0.01	0.002	1096	0.01	0.003	1948
					SK1SMI40/H10 Dimensions			SK1SMI50/H10 Dimensions			SK1SMI63/H10 Dimensions		
					📖 202			📖 202			📖 202		

RATINGS

Actual speeds and torques will vary based on the motor performance data.

Send Quote Requests to info@automatedpt.com
Call +1(800)985-6929 To Order or Order Online At Nordgearmotors.com

MINICASE®
Double Worm Ratings

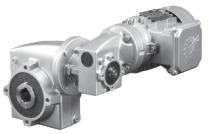

NORD® DRIVESYSTEMS

RATINGS

Gearbox Size					SK 1SMI40/31			SK 1SMI50/31			SK 1SMI63/31			SK 1SMI75/40		
Total Ratio	Worm Ratio	2nd Ratio	Input	Output	Max Input	Max Output	Torque	Max Input	Max Output	Torque	Max Input	Max Output	Torque	Max Input	Max Output	Torque
i	i_{worm}	i_{2nd}	n_1 [rpm]	n_2 [rpm]	P_{1max} [hp]	P_{2max} [hp]	T_{2max} [lb-in]	P_{1max} [hp]	P_{2max} [hp]	T_{2max} [lb-in]	P_{1max} [hp]	P_{2max} [hp]	T_{2max} [lb-in]	P_{1max} [hp]	P_{2max} [hp]	T_{2max} [lb-in]
150	5	30	1750	11.7	0.30	0.12	655	0.49	0.22	1177	0.83	0.39	2097	0.96	0.52	2832
			1150	7.7	0.18	0.08	674	0.29	0.15	1213	0.50	0.26	2156	0.59	0.35	2911
			850	5.7	0.14	0.06	704	0.23	0.11	1267	0.40	0.20	2252	0.47	0.27	3041
			100	0.7	0.02	0.01	861	0.04	0.02	1549	0.07	0.03	2754	0.08	0.04	3718
225	7.5	30	1750	7.8	0.22	0.09	699	0.38	0.15	1248	0.64	0.27	2221	0.73	0.37	3009
			1150	5.1	0.13	0.06	712	0.21	0.10	1282	0.37	0.18	2279	0.44	0.25	3077
			850	3.8	0.10	0.04	732	0.17	0.08	1318	0.29	0.14	2343	0.38	0.19	3163
			100	0.4	0.01	0.01	877	0.03	0.01	1578	0.04	0.02	2806	0.05	0.03	3788
300	10	30	1750	5.8	0.18	0.07	717	0.30	0.12	1292	0.52	0.21	2301	0.60	0.29	3106
			1150	3.8	0.10	0.04	731	0.17	0.08	1317	0.29	0.14	2341	0.34	0.19	3160
			850	2.8	0.08	0.03	754	0.13	0.06	1356	0.22	0.11	2411	0.27	0.15	3255
			100	0.3	0.01	0.005	885	0.02	0.01	1593	0.03	0.01	2832	0.04	0.02	3823
375	12.5	30	1750	4.7	0.16	0.05	735	0.27	0.10	1319	0.46	0.17	2345	0.53	0.23	3168
			1150	3.1	0.08	0.04	747	0.14	0.07	1344	0.24	0.12	2390	0.29	0.16	3226
			850	2.3	0.06	0.03	770	0.11	0.05	1386	0.19	0.09	2464	0.23	0.12	3327
			100	0.3	0.01	0.004	929	0.02	0.01	1673	0.03	0.01	2974	0.03	0.02	4014
450	15	30	1750	3.9	0.14	0.05	743	0.24	0.08	1345	0.42	0.15	2390	0.47	0.20	3221
			1150	2.6	0.07	0.03	762	0.12	0.06	1371	0.21	0.10	2437	0.25	0.13	3291
			850	1.9	0.05	0.02	781	0.09	0.04	1406	0.16	0.07	2500	0.19	0.10	3375
			100	0.2	0.01	0.003	959	0.01	0.01	1726	0.02	0.01	3068	0.03	0.01	4142
600	20	30	1750	2.9	0.12	0.04	770	0.20	0.06	1381	0.35	0.11	2460	0.39	0.15	3319
			1150	1.9	0.05	0.02	780	0.09	0.04	1405	0.16	0.08	2497	0.19	0.10	3371
			850	1.4	0.04	0.02	806	0.07	0.03	1451	0.12	0.06	2579	0.15	0.08	3482
			100	0.2	0.01	0.003	996	0.01	0.005	1792	0.02	0.01	3186	0.02	0.01	4301
750	25	30	1750	2.3	0.10	0.03	779	0.18	0.05	1407	0.30	0.09	2505	0.34	0.13	3381
			1150	1.5	0.04	0.02	797	0.07	0.03	1435	0.13	0.06	2552	0.16	0.08	3445
			850	1.1	0.03	0.01	827	0.06	0.03	1488	0.10	0.05	2645	0.12	0.06	3571
			100	0.1	0.00	0.002	1018	0.01	0.004	1832	0.02	0.01	3257	0.02	0.01	4397
900	30	30	1750	1.9	0.10	0.02	797	0.17	0.04	1434	0.30	0.08	2549	0.32	0.11	3434
			1150	1.3	0.04	0.02	816	0.07	0.03	1469	0.12	0.05	2611	0.14	0.07	3525
			850	0.9	0.03	0.01	840	0.05	0.02	1513	0.09	0.04	2689	0.11	0.05	3630
			100	0.1	0.00	0.002	1032	0.01	0.003	1859	0.01	0.01	3304	0.02	0.01	4460
					SK1SMI40/31 Dimensions			SK1SMI50/31 Dimensions			SK1SMI63/31 Dimensions			SK1SMI75/40 Dimensions		
					202			202			202			202		

Actual speeds and torques will vary based on the motor performance data.

Send Quote Requests to info@automatedpt.com
Call +1(800)985-6929 To Order or Order Online At Nordgearmotors.com

NORD DRIVESYSTEMS

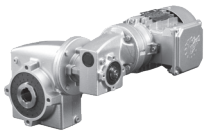

MINICASE® Double Worm Ratings

Gearbox Size					SK 1SMI40/31			SK 1SMI50/31			SK 1SMI63/31			SK 1SMI75/40		
Total Ratio	Worm Ratio	2nd Ratio	Input	Output	Max Input	Max Output	Torque	Max Input	Max Output	Torque	Max Input	Max Output	Torque	Max Input	Max Output	Torque
i	i_{worm}	i_{2nd}	n_1 [rpm]	n_2 [rpm]	P_{1max} [hp]	P_{2max} [hp]	T_{2max} [lb-in]	P_{1max} [hp]	P_{2max} [hp]	T_{2max} [lb-in]	P_{1max} [hp]	P_{2max} [hp]	T_{2max} [lb-in]	P_{1max} [hp]	P_{2max} [hp]	T_{2max} [lb-in]
1200	40	30	1750	1.5	0.09	0.02	823	0.15	0.03	1487	0.27	0.06	2637	0.30	0.08	3558
			1150	1.0	0.03	0.01	839	0.05	0.02	1511	0.09	0.04	2686	0.12	0.06	3626
			850	0.7	0.02	0.01	858	0.04	0.02	1544	0.07	0.03	2744	0.08	0.04	3705
			100	0.08	0.00	0.001	1051	0.01	0.003	1892	0.01	0.004	3363	0.01	0.01	4540
1500	50	30	1750	1.2	0.08	0.02	841	0.14	0.03	1513	0.26	0.05	2690	0.27	0.07	3637
			1150	0.8	0.02	0.01	853	0.04	0.02	1536	0.07	0.03	2731	0.09	0.04	3687
			850	0.6	0.02	0.01	868	0.03	0.01	1562	0.06	0.02	2777	0.07	0.03	3750
			100	0.07	0.00	0.001	1062	0.00	0.002	1912	0.01	0.004	3398	0.01	0.00	4588
1800	60	30	1750	1.0	0.07	0.01	850	0.12	0.02	1531	0.22	0.04	2726	0.24	0.06	3682
			1150	0.6	0.02	0.01	863	0.04	0.02	1553	0.06	0.03	2761	0.07	0.04	3727
			850	0.5	0.02	0.01	875	0.03	0.01	1575	0.05	0.02	2800	0.06	0.03	3779
			100	0.06	0.00	0.001	1069	0.00	0.002	1925	0.01	0.003	3422	0.01	0.00	4620
2400	80	30	1750	0.7	0.07	0.01	867	0.11	0.02	1558	0.20	0.03	2770	0.21	0.04	3744
			1150	0.5	0.02	0.01	874	0.03	0.01	1574	0.05	0.02	2798	0.06	0.03	3777
			850	0.4	0.01	0.005	883	0.02	0.01	1590	0.04	0.02	2827	0.04	0.02	3817
			100	0.04	0.00	0.001	1079	0.00	0.001	1941	0.00	0.002	3451	0.01	0.00	4660
3000	100	30	1750	0.6	0.06	0.01	876	0.11	0.01	1575	0.20	0.03	2797	0.19	0.03	3779
			1150	0.4	0.01	0.01	881	0.02	0.01	1586	0.04	0.02	2820	0.05	0.02	3807
			850	0.3	0.01	0.004	918	0.02	0.01	1653	0.03	0.01	2938	0.04	0.02	3967
			100	0.03	0.00	0.001	1084	0.00	0.001	1951	0.00	0.002	3469	0.00	0.00	4683
					SK1SMI40/31 Dimensions			SK1SMI50/31 Dimensions			SK1SMI63/31 Dimensions			SK1SMI75/40 Dimensions		
					📖 202			📖 202			📖 202			📖 202		

RATINGS

Actual speeds and torques will vary based on the motor performance data.

Send Quote Requests to info@automatedpt.com
Call +1(800)985-6929 To Order or Order Online At Nordgearmotors.com

MINICASE®
Single Worm Selection

NORD® DRIVESYSTEMS

RATINGS

Output Speed n_2 [rpm]	Total Ratio i	Worm Ratio i_{worm}	2nd Ratio i_{2nd}	Motor Power ~ Based on 1800 rpm Syncronous: 0.16 hp [lb-in]	0.25 hp [lb-in]	0.33 hp [lb-in]	0.50 hp [lb-in]	0.75 hp [lb-in]	1.0 hp [lb-in]	1.5 hp [lb-in]	2.0 hp [lb-in]	3.0 hp [lb-in]	5.0 hp [lb-in]	Gear Max Torque T_{2max} [lb-in]	Max Input Power P_{1max} [hp]	Gear Unit	NEMA Adapter	Dim. Page
				Output Torque (T_2)														
350	5	5	-	26	42	54	79	120						204	1.30	SK 1SMI31	48C	172
				26	42	54	79	120	166					204	1.30	SK 1SMI31	56C	172
				27	43	55	81	123	171					336	2.10	SK 1SMI40	56C	178
									171	254				336	2.10	SK 1SMI40	140TC	178
				27	43	56	83	126	175					584	3.56	SK 1SMI50	56C	184
									175	259	345			584	3.56	SK 1SMI50	140TC	184
				27	44	57	84	127	177					1044	6.30	SK 1SMI63	56C	190
									177	262	349			1044	6.30	SK 1SMI63	140TC	190
												510	840	1044	6.30	SK 1SMI63	180TC	190
				28	44	57	85	129	179					1735	10.36	SK 1SMI75	56C	196
									179	265	353			1735	10.36	SK 1SMI75	140TC	196
												516	850	1735	10.36	SK 1SMI75	180TC	196
233	7.5	7.5	-	37	60	77	113	172						239	1.06	SK 1SMI31	48C	172
				37	60	77	113	172	236					239	1.06	SK 1SMI31	56C	172
				38	61	79	116	176	245					389	1.69	SK 1SMI40	56C	178
										364				389	1.69	SK 1SMI40	140TC	178
				39	43	82	120	183	254					690	2.90	SK 1SMI50	56C	184
										376	501			690	2.90	SK 1SMI50	140TC	184
				40	65	83	123	187	259					1230	5.05	SK 1SMI63	56C	190
										385	512			1230	5.05	SK 1SMI63	140TC	190
												740	1219	1230	5.05	SK 1SMI63	180TC	190
				41	65	84	124	189	262					2071	8.41	SK 1SMI75	56C	196
										389	518			2071	8.41	SK 1SMI75	140TC	196
												758	1247	2071	8.41	SK 1SMI75	180TC	196
175	10	10	-	48	76	99	145	221						230	0.80	SK 1SMI31	48C	172
				48	76	99	145	221						230	0.80	SK 1SMI31	56C	172
				50	79	103	151	230	319					372	1.24	SK 1SMI40	56C	178
										473				372	1.24	SK 1SMI40	140TC	178
				51	82	106	156	238	330					664	2.14	SK 1SMI50	56C	184
										490	652			664	2.14	SK 1SMI50	140TC	184
				53	84	109	160	244	338					1186	3.74	SK 1SMI63	56C	190
										502	668			1186	3.74	SK 1SMI63	140TC	190
												965		1186	3.74	SK 1SMI63	180TC	190
				53	84	111	164	249	346					2009	6.20	SK 1SMI75	56C	196
										513	683			2009	6.20	SK 1SMI75	140TC	196
												999	1645	2009	6.20	SK 1SMI75	180TC	196

63S/4 | 63L/4 | 71S/4 | 71L/4 | 80S/4 | 80L/4 80LH/4 80LP/4 | 90SP/4 | 90SH/4 90LP/4 | 90LH/4 | 100LP/4 | 100LH/4 112MP/4 | 112MH/4

NORD Motors - Model type in blue is an energy efficient motor
NORD Motors - Model type in light blue is a premium efficient motor

	Service Factor < 1.0
Class I	Service Factor 1.0-1.39
Class II	Service Factor 1.4-1.99
Class III	Service Factor 2.0 min.

Actual speeds and torques will vary based on the motor performance data.

Send Quote Requests to info@automatedpt.com
Call +1(800)985-6929 To Order or Order Online At Nordgearmotors.com

NORD DRIVESYSTEMS

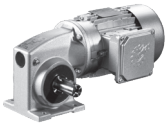

MINICASE®
Single Worm Selection

Output Speed n_2 [rpm]	Total Ratio i	Worm Ratio i_{worm}	2nd Ratio i_{2nd}	Motor Power ~ Based on 1800 rpm Syncronous Output Torque (T_2) 0.16 hp [lb-in]	0.25 hp [lb-in]	0.33 hp [lb-in]	0.50 hp [lb-in]	0.75 hp [lb-in]	1.0 hp [lb-in]	1.5 hp [lb-in]	2.0 hp [lb-in]	3.0 hp [lb-in]	5.0 hp [lb-in]	Gear Max Torque T_{2max} [lb-in]	Max Input Power P_{1max} [hp]	Gear Unit	NEMA Adapter	Dim. Page
140	12.5	12.5	-	60	96	124	182							212	0.61	SK 1SMI31	48C	172
				60	96	124	182							212	0.61	SK 1SMI31	56C	172
				60	96	124	182	277	384					363	1.00	SK 1SMI40	56C	178
				60	96	124	182	277	384					637	1.00	SK 1SMI50	56C	184
										570	759			637	1.69	SK 1SMI50	140TC	184
				60	96	124	182	277	384					1142	1.69	SK 1SMI63	56C	190
										570	759			1142	2.91	SK 1SMI63	140TC	190
				66	104									1142	2.91	SK 1SMI63	180TC	190
						124	182	277	384					1912	4.77	SK 1SMI75	56C	196
										570	759			1912	4.77	SK 1SMI75	140TC	196
												1110	1828	1912	4.77	SK 1SMI75	180TC	196
117	15	15	-	64	103	133	196							257	0.66	SK 1SMI31	48C	172
				64	103	133	196							257	0.66	SK 1SMI31	56C	172
				68	109	141	207	316	438					434	1.06	SK 1SMI40	56C	178
				72	115	148	218	332	461					770	1.79	SK 1SMI50	56C	184
										684	910			770	1.79	SK 1SMI50	140TC	184
				74	119	154	226	345	478					1372	3.07	SK 1SMI63	56C	190
										710	944			1372	3.07	SK 1SMI63	140TC	190
												1380		1372	3.07	SK 1SMI63	180TC	190
				76	120	158	232	353	490					2336	5.10	SK 1SMI75	56C	196
										727	967			2336	5.10	SK 1SMI75	140TC	196
												1416	2329	2336	5.10	SK 1SMI75	180TC	196
88	20	20	-	81	130	168	247							239	0.49	SK 1SMI31	48C	172
				81	130	168	247							239	0.49	SK 1SMI31	56C	172
				86	138	178	262	399						398	0.77	SK 1SMI40	56C	178
				92	147	190	280	426	592					717	1.30	SK 1SMI50	56C	184
										878				717	1.30	SK 1SMI50	140TC	184
				95	153	198	291	443	615					1274	2.22	SK 1SMI63	56C	190
										912	1214			1274	2.22	SK 1SMI63	140TC	190
				99	156	205	302	459	638					2168	3.65	SK 1SMI75	56C	196
										947	1259			2168	3.65	SK 1SMI75	140TC	196
												1843		2168	3.65	SK 1SMI75	180TC	196

63S/4	63L/4	71S/4	71L/4	80S/4	80L/4 80LH/4 80LP/4	90SP/4 90SH/4	90LP/4 90LH/4	100LP/4 100LH/4	112MP/4 112MH/4

NORD Motors - Model type in blue is an energy efficient motor

NORD Motors - Model type in light blue is a premium efficient motor

	Service Factor < 1.0
Class I	Service Factor 1.0-1.39
Class II	Service Factor 1.4-1.99
Class III	Service Factor 2.0 min.

Actual speeds and torques will vary based on the motor performance data.

Send Quote Requests to info@automatedpt.com
Call +1(800)985-6929 To Order or Order Online At Nordgearmotors.com

RATINGS

MINICASE®
Single Worm Selection

NORD DRIVESYSTEMS

RATINGS

Output Speed n_2 [rpm]	Total Ratio i	Worm Ratio i_{worm}	2nd Ratio i_{2nd}	Motor Power ~ Based on 1800 rpm Syncronous: 0.16 hp	0.25 hp	0.33 hp	0.50 hp	0.75 hp	1.0 hp	1.5 hp	2.0 hp	3.0 hp	5.0 hp	Gear Max Torque T_{2max} [lb-in]	Max Input Power P_{1max} [hp]	Gear Unit	NEMA Adapter	Dim. Page
				Output Torque (T_2) [lb-in]	[lb-in]	[lb-in]	[lb-in]	[lb-in]	[lb-in]	[lb-in]	[lb-in]	[lb-in]	[lb-in]					
70	25	25	-	97	155	201	308							221	0.38	SK 1SMI31	48C	172
				97	155	201	308							221	0.38	SK 1SMI31	56C	172
				103	165	213	314	477						372	0.60	SK 1SMI40	56C	178
				110	177	229	336	512	711					673	1.01	SK 1SMI50	56C	184
				115	184	238	350	533	740					1195	1.72	SK 1SMI63	56C	190
										1098	1460			1195	1.72	SK 1SMI63	140TC	190
				120	190	250	368	560	778					2036	2.79	SK 1SMI75	56C	196
										1155	1536			2036	2.79	SK 1SMI75	140TC	196
												2249		2036	2.79	SK 1SMI75	180TC	196
58	30	30	-	100	161	208								266	0.44	SK 1SMI31	48C	172
				100	161	208								266	0.44	SK 1SMI31	56C	172
				109	175	226	333	507						442	0.67	SK 1SMI40	56C	178
				118	189	245	360	548	761					796	1.11	SK 1SMI50	56C	184
				125	201	259	382	581	807					1416	1.86	SK 1SMI63	56C	190
										1198	1593			1416	1.86	SK 1SMI63	140TC	190
				139	220	259	382	581	807					1929	2.25	SK 1SMI75	56C	196
										1198	1593			1929	2.25	SK 1SMI75	140TC	196
												2329		1929	2.25	SK 1SMI75	180TC	196
44	40	40	-	122	195	252								248	0.34	SK 1SMI31	48C	172
				122	195	252								248	0.34	SK 1SMI31	56C	172
				134	214	277	407							407	0.51	SK 1SMI40	56C	178
				148	237	306	451	686	953					735	0.83	SK 1SMI50	56C	184
				158	252	326	480	731	1014					1301	1.38	SK 1SMI63	56C	190
										1505				1301	1.38	SK 1SMI63	140TC	190
				166	262	346	509	775	1076					2212	2.21	SK 1SMI75	56C	196
										1597	2124			2212	2.21	SK 1SMI75	140TC	196
35	50	50	-	140	225	286								230	0.27	SK 1SMI31	48C	172
				140	225	286								230	0.27	SK 1SMI31	56C	172
				155	249	321	473							381	0.41	SK 1SMI40	56C	178
				173	277	358	527	803						681	0.65	SK 1SMI50	56C	184
				185	296	383	564	858	1191					1212	1.09	SK 1SMI63	56C	190
				199	314	414	609	927	1287					2062	1.71	SK 1SMI75	56C	196
										1910	2541			2062	1.71	SK 1SMI75	140TC	196

63S/4	63L/4	71S/4	71L/4	80S/4	80LH/4 80LP/4	80L/4	90SP/4	90SH/4	90LP/4	90LH/4	100LP/4	100LH/4	112MP/4	112MH/4

NORD Motors - Model type in blue is an energy efficient motor

NORD Motors - Model type in light blue is a premium efficient motor

	Service Factor < 1.0
Class I	Service Factor 1.0-1.39
Class II	Service Factor 1.4-1.99
Class III	Service Factor 2.0 min.

Actual speeds and torques will vary based on the motor performance data.

Send Quote Requests to info@automatedpt.com
Call +1(800)985-6929 To Order or Order Online At Nordgearmotors.com

NORD DRIVESYSTEMS

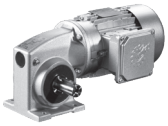

MINICASE®
Single Worm Selection

Output Speed n_2 [rpm]	Total Ratio i	Worm Ratio i_{worm}	2nd Ratio i_{2nd}	Motor Power ~ Based on 1800 rpm Syncronous: 0.16 hp	0.25 hp	0.33 hp	0.50 hp	0.75 hp	1.0 hp	1.5 hp	2.0 hp	3.0 hp	5.0 hp	Gear Max Torque T_{2max} [lb-in]	Max Input Power P_{1max} [hp]	Gear Unit	NEMA Adapter	Dim. Page
				Output Torque (T_2) [lb-in]	[lb-in]	[lb-in]	[lb-in]	[lb-in]	[lb-in]	[lb-in]	[lb-in]	[lb-in]	[lb-in]					
29	60	60	-	154	242									212	0.23	SK 1SMI31	48C	172
				154	242									212	0.23	SK 1SMI31	56C	172
				172	275	356								354	0.34	SK 1SMI40	56C	178
				193	310	400	589							646	0.55	SK 1SMI50	56C	184
				211	338	437	644	980	1360					1150	0.90	SK 1SMI63	56C	190
				228	360	474	698	1063	1475					1956	1.41	SK 1SMI75	56C	196
										2190				1956	1.41	SK 1SMI75	140TC	196
22	80	80	-	177										195	0.18	SK 1SMI31	48C	172
				177										195	0.18	SK 1SMI31	56C	172
				200	321	415								327	0.27	SK 1SMI40	56C	178
				229	367	474	698							593	0.43	SK 1SMI50	56C	184
				253	405	524	771	1174						1044	0.69	SK 1SMI63	56C	190
				275	435	583	858	1306	1813					1779	1.05	SK 1SMI75	56C	196
18	100	100	-	196										186	0.17	SK 1SMI31	48C	172
				196										186	0.17	SK 1SMI31	56C	172
				221	354									301	0.23	SK 1SMI40	56C	178
				257	411	531								549	0.36	SK 1SMI50	56C	184
				292	468	605	891							974	0.57	SK 1SMI63	56C	190
				320	506	667	982	1495	2075					1655	0.88	SK 1SMI75	56C	196

63S/4	63L/4	71S/4	71L/4	80S/4	80L/4 80LH/4 80LP/4	90SP/4 90SH/4	90LP/4 90LH/4	100LP/4 100LH/4	112MP/4 112MH/4

NORD Motors - Model type in blue is an energy efficient motor

NORD Motors - Model type in light blue is a premium efficient motor

	Service Factor < 1.0
Class I	Service Factor 1.0-1.39
Class II	Service Factor 1.4-1.99
Class III	Service Factor 2.0 min.

RATINGS

Actual speeds and torques will vary based on the motor performance data.

Send Quote Requests to info@automatedpt.com
Call +1(800)985-6929 To Order or Order Online At Nordgearmotors.com

MINICASE® 2-Stage Helical Worm Selection

NORD DRIVESYSTEMS

RATINGS

Output Speed n_2 [rpm]	Total Ratio i	Worm Ratio i_{worm}	2nd Ratio i_{2nd}	Motor Power ~ Based on 1800 rpm Syncronous: 0.16 hp	0.25 hp	0.33 hp	0.50 hp	0.75 hp	1.0 hp	1.5 hp	2.0 hp	3.0 hp	5.0 hp	Gear Max Torque T_{2max} [lb-in]	Max Input Power P_{1max} [hp]	Gear Unit	NEMA Adapter	Dim. Page
				Output Torque (T_2) [lb-in]	[lb-in]	[lb-in]	[lb-in]	[lb-in]	[lb-in]	[lb-in]	[lb-in]	[lb-in]	[lb-in]					
35	50	5	10	242	387	500								549	0.38	SK 1SMI40/H10	56C	202
				248	397	513	755							742	0.50	SK 1SMI50/H10	56C	202
				251	401	519	764							751	0.50	SK 1SMI63/H10	56C	202
23	75	7.5	10	340	545	704								637	0.31	SK 1SMI40/H10	56C	202
				349	559	723	1064							1061	0.50	SK 1SMI50/H10	56C	202
				353	566	732	1077							1074	0.50	SK 1SMI63/H10	56C	202
18	100	10	10	436	698									611	0.24	SK 1SMI40/H10	56C	202
				447	717	927	1364							1080	0.41	SK 1SMI50/H10	56C	202
				453	726	939	1382							1320	0.50	SK 1SMI63/H10	56C	202
14	125	12.5	10	544	918									584	0.19	SK 1SMI40/H10	56C	202
				544	872	1128								1044	0.32	SK 1SMI50/H10	56C	202
				544	872	1128	1659							1631	0.50	SK 1SMI63/H10	56C	202
12	150	15	10	573										699	0.21	SK 1SMI40/H10	56C	202
				591	946	1223								1257	0.36	SK 1SMI50/H10	56C	202
				609	975	1260	1854							1772	0.50	SK 1SMI63/H10	56C	202
8.8	200	20	10	704										646	0.15	SK 1SMI40/H10	56C	202
				728	1166	1507								1168	0.27	SK 1SMI50/H10	56C	202
				752	1204	1557	2291							2071	0.46	SK 1SMI63/H10	56C	202
7	250	25	10	763										611	0.12	SK 1SMI40/H10	56C	202
				865	1386									1097	0.21	SK 1SMI50/H10	56C	202
				880	1410	1823	2782							1947	0.37	SK 1SMI63/H10	56C	202
5.8	300	30	10	823										717	0.14	SK 1SMI40/H10	56C	202
				877	1405									1292	0.24	SK 1SMI50/H10	56C	202
				913	1462	1891								2301	0.42	SK 1SMI63/H10	56C	202
4.4	400	40	10	830										664	0.11	SK 1SMI40/H10	56C	202
				1050										1186	0.19	SK 1SMI50/H10	56C	202
				1098	1759	2274								2115	0.32	SK 1SMI63/H10	56C	202
3.5	500	50	10	774										620	0.09	SK 1SMI40/H10	56C	202
				1193										1106	0.15	SK 1SMI50/H10	56C	202
				1223	1959	2533								1974	0.27	SK 1SMI63/H10	56C	202

63S/4	63L/4	71S/4	71L/4	80S/4	80L/4 80LH/4 80LP/4	90S/4	90SH/4 90SP/4	90L/4 90LP/4	100L/4 100LP/4	100LH/4	112MH/4 112MP/4

NORD Motors - Model type in blue is an energy efficient motor

NORD Motors - Model type in light blue is a premium efficient motor

	Service Factor < 1.0
Class I	Service Factor 1.0-1.39
Class II	Service Factor 1.4-1.99
Class III	Service Factor 2.0 min.

Actual speeds and torques will vary based on the motor performance data.

Send Quote Requests to info@automatedpt.com
Call +1(800)985-6929 To Order or Order Online At Nordgearmotors.com

NORD DRIVESYSTEMS

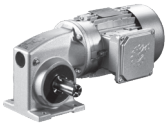

MINICASE® 2-Stage Helical Worm Selection

Output Speed n_2 [rpm]	Total Ratio i	Worm Ratio i_{worm}	2nd Ratio i_{2nd}	Motor Power ~ Based on 1800 rpm Syncronous: 0.16 hp	0.25 hp	0.33 hp	0.50 hp	0.75 hp	1.0 hp	1.5 hp	2.0 hp	3.0 hp	5.0 hp	Gear Max Torque T_{2max} [lb-in]	Max Input Power P_{1max} [hp]	Gear Unit	NEMA Adapter	Dim. Page
				Output Torque (T_2) [lb-in]	[lb-in]	[lb-in]	[lb-in]	[lb-in]	[lb-in]	[lb-in]	[lb-in]	[lb-in]	[lb-in]					
2.9	600	60	10	730										584	0.08	SK 1SMI40/H10	56C	202
				1305										1044	0.13	SK 1SMI50/H10	56C	202
				1360	2179									1858	0.23	SK 1SMI63/H10	56C	202
2.2	800	80	10	664										531	0.07	SK 1SMI40/H10	56C	202
				1195										956	0.11	SK 1SMI50/H10	56C	202
				1527										1699	0.19	SK 1SMI63/H10	56C	202
1.8	1000	100	10	608										487	0.06	SK 1SMI40/H10	56C	202
				1117										894	0.09	SK 1SMI50/H10	56C	202
				1670										1584	0.16	SK 1SMI63/H10	56C	202

63S/4	63L/4	71S/4	71L/4	80S/4	80L/4 80LH/4 80LP/4	90SP/4 90SH/4	90LP/4 90LH/4	100LP/4 100LH/4	112MP/4 112MH/4

NORD Motors - Model type in blue is an energy efficient motor

NORD Motors - Model type in light blue is a premium efficient motor

	Service Factor < 1.0
Class I	Service Factor 1.0-1.39
Class II	Service Factor 1.4-1.99
Class III	Service Factor 2.0 min.

RATINGS

Actual speeds and torques will vary based on the motor performance data.

Send Quote Requests to info@automatedpt.com
Call +1(800)985-6929 To Order or Order Online At Nordgearmotors.com

MINICASE®
Double Worm Selection

NORD® DRIVESYSTEMS

RATINGS

Output Speed n_2 [rpm]	Total Ratio i	Worm Ratio i_{worm}	2nd Ratio i_{2nd}	Motor Power ~ Based on 1800 rpm Syncronous: 0.16 hp	0.25 hp	0.33 hp	0.50 hp	0.75 hp	1.0 hp	1.5 hp	2.0 hp	3.0 hp	5.0 hp	Gear Max Torque T_{2max} [lb-in]	Max Input Power P_{1max} [hp]	Gear Unit	NEMA Adapter	Dim. Page
				Output Torque (T_2) [lb-in]	[lb-in]	[lb-in]	[lb-in]	[lb-in]	[lb-in]	[lb-in]	[lb-in]	[lb-in]	[lb-in]					
12	150	5	30	376	602	778								655	0.30	SK 1SMI40/31	56C	202
				412	660	853	1254							1177	0.49	SK 1SMI50/31	56C	202
				430	688	890	1309							2097	0.83	SK 1SMI63/31	56C	202
				430	688	890	1309	1993	2766					2832	0.96	SK 1SMI75/40	56C	202
7.8	225	7.5	30	524	839									699	0.22	SK 1SMI40/31	56C	202
				550	882	1140								1248	0.38	SK 1SMI50/31	56C	202
				577	925	1195	1759							2221	0.64	SK 1SMI63/31	56C	202
				591	946	1223	1800	2740	3803					3009	0.73	SK 1SMI75/40	56C	202
5.8	300	10	30	662										717	0.18	SK 1SMI40/31	56C	202
				698	1118	1446								1292	0.30	SK 1SMI50/31	56C	202
				734	1176	1520	2236							2301	0.52	SK 1SMI63/31	56C	202
				752	1204	1557	2291	3487						3106	0.60	SK 1SMI75/40	56C	202
4.7	375	12.5	30	716										735	0.16	SK 1SMI40/31	56C	202
				716	1147	1483								1319	0.27	SK 1SMI50/31	56C	202
				716	1147	1483	2182							2345	0.46	SK 1SMI63/31	56C	202
				716	1147	1483	2182	3321						3168	0.53	SK 1SMI75/40	56C	202
3.9	450	15	30	859										743	0.14	SK 1SMI40/31	56C	202
				913	1462									1345	0.24	SK 1SMI50/31	56C	202
				940	1505	1946	2864							2390	0.42	SK 1SMI63/31	56C	202
				966	1548	2002	2945							3221	0.47	SK 1SMI75/40	56C	202
2.9	600	20	30	962										770	0.12	SK 1SMI40/31	56C	202
				1110	1778									1381	0.20	SK 1SMI50/31	56C	202
				1145	1835	2372								2460	0.35	SK 1SMI63/31	56C	202
				1181	1893	2447	3600							3319	0.39	SK 1SMI75/40	56C	202
2.3	750	25	30	974										779	0.10	SK 1SMI40/31	56C	202
				1298										1407	0.18	SK 1SMI50/31	56C	202
				1342	2151	2780								2505	0.30	SK 1SMI63/31	56C	202
				1387	2222	2873	4227							3381	0.34	SK 1SMI75/40	56C	202
1.9	900	30	30	996										796	0.10	SK 1SMI40/31	56C	202
				1342										1434	0.17	SK 1SMI50/31	56C	202
				1396	2237	2891								2549	0.30	SK 1SMI63/31	56C	202
				1450	2323	3003	4418							3434	0.32	SK 1SMI75/40	56C	202

63S/4 | 63L/4 | 71S/4 | 71L/4 | 80S/4 | 80L/4 80LH/4 80LP/4 | 90S/4 90SP/4 | 90SH/4 | 90LH/4 90LP/4 | 100LH/4 100LP/4 | 112MH/4 112MP/4

NORD Motors - Model type in blue is an energy efficient motor

NORD Motors - Model type in light blue is a premium efficient motor

	Service Factor < 1.0
Class I	Service Factor 1.0-1.39
Class II	Service Factor 1.4-1.99
Class III	Service Factor 2.0 min.

Actual speeds and torques will vary based on the motor performance data.

Send Quote Requests to info@automatedpt.com
Call +1(800)985-6929 To Order or Order Online At Nordgearmotors.com

NORD DRIVESYSTEMS

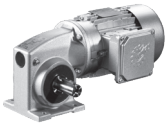

MINICASE®
Double Worm Selection

Output Speed n_2 [rpm]	Total Ratio i	Worm Ratio i_{worm}	2nd Ratio i_{2nd}	Motor Power ~ Based on 1800 rpm Syncronous: 0.16 hp	0.25 hp	0.33 hp	0.50 hp	0.75 hp	1.0 hp	1.5 hp	2.0 hp	3.0 hp	5.0 hp	Gear Max Torque T_{2max} [lb-in]	Max Input Power P_{1max} [hp]	Gear Unit	NEMA Adapter	Dim. Page
				Output Torque (T_2) [lb-in]	[lb-in]	[lb-in]	[lb-in]	[lb-in]	[lb-in]	[lb-in]	[lb-in]	[lb-in]	[lb-in]					
1.5	1200	40	30	1029										823	0.09	SK 1SMI40/31	56C	202
				1647										1487	0.15	SK 1SMI50/31	56C	202
				1647	2638	3410								2637	0.27	SK 1SMI63/31	56C	202
				1718	2753	3559								3558	0.30	SK 1SMI75/40	56C	202
1.2	1500	50	30	1051										841	0.08	SK 1SMI40/31	56C	202
				1892										1513	0.14	SK 1SMI50/31	56C	202
				1790	2868									2690	0.26	SK 1SMI63/31	56C	202
				1969	3154	4078								3637	0.27	SK 1SMI75/40	56C	202
0.97	1800	60	30	1062										850	0.07	SK 1SMI40/31	56C	202
				1914										1531	0.12	SK 1SMI50/31	56C	202
				2040	3269									2726	0.22	SK 1SMI63/31	56C	202
				2148	3441	4448								3682	0.24	SK 1SMI75/40	56C	202
0.73	2400	80	30	1084										867	0.07	SK 1SMI40/31	56C	202
				1947										1558	0.11	SK 1SMI50/31	56C	202
				2291	3670									2770	0.20	SK 1SMI63/31	56C	202
				2434	3900	4819								3744	0.21	SK 1SMI75/40	56C	202
0.58	3000	100	30	1095										876	0.06	SK 1SMI40/31	56C	202
				1969										1575	0.11	SK 1SMI50/31	56C	202
				2506										2797	0.20	SK 1SMI63/31	56C	202
				2327	3728									3779	0.19	SK 1SMI75/40	56C	202

63S/4	63L/4	71S/4	71L/4	80S/4	80L/4 80LH/4 80LP/4	90SP/4 90SH/4	90LP/4 90LH/4	100LP/4 100LH/4	112MP/4 112MH/4

NORD Motors - Model type in blue is an energy efficient motor
NORD Motors - Model type in light blue is a premium efficient motor

	Service Factor < 1.0
Class I	Service Factor 1.0-1.39
Class II	Service Factor 1.4-1.99
Class III	Service Factor 2.0 min.

Actual speeds and torques will vary based on the motor performance data.

Send Quote Requests to info@automatedpt.com
Call +1(800)985-6929 To Order or Order Online At Nordgearmotors.com

RATINGS

Part Numbers
C-Face Motors

NORD DRIVESYSTEMS

C-FACE MOTORS

C-face 230/460V-60Hz Standard Efficiency		Part Number
63S/4-56C	230/460V-60Hz, 1/6 hp	31110012
63L/4-56C	230/460V-60Hz, 1/4 hp	31610012
71S/4-56C	230/460V-60Hz, 1/3 hp	32110012
71L/4-56C	230/460V-60Hz, 1/2 hp	32610012
80S/4-56C	230/460V-60Hz, 3/4 hp	33110012
80L/4-56C	230/460V-60Hz, 1 hp	33610022

C-face 230/460V-60Hz Energy Efficient ee		Part Number
80LH/4-56C	230/460V-60Hz, 1 hp	33610094
80LH/4-143TC	230/460V-60Hz, 1 hp	33610092
90SH/4-145TC	230/460V-60Hz, 1-1/2 hp	34110092
90LH/4-145TC	230/460V-60Hz, 2 hp	34610092
100LH/4-182TC	230/460V-60Hz, 3 hp	35610092
112MH/4-184TC	230/460V-60Hz, 5 hp	36110082

C-face 230/460V-60Hz Premium Efficient pe		Part Number
80LP/4-56C	230/460V-60Hz, 1 hp	33610294
80LP/4-143TC	230/460V-60Hz, 1 hp	33610292
90SP/4-145TC	230/460V-60Hz, 1-1/2 hp	34110292
90LP/4-145TC	230/460V-60Hz, 2 hp	34610292
100LP/4-182TC	230/460V-60Hz, 3 hp	35110292
112MP/4-184TC	230/460V-60Hz, 5 hp	36110292

C-face 575V-60Hz Standard Efficiency		Part Number
63S/4-56C	575V-60Hz, 1/6 hp	31110013
63L/4-56C	575V-60Hz, 1/4 hp	31610013
71S/4-56C	575V-60Hz, 1/3 hp	32110013
71L/4-56C	575V-60Hz, 1/2 hp	32610013
80S/4-56C	575V-60Hz, 3/4 hp	33110013
80L/4-56C	575V-60Hz, 1 hp	33610023

C-face 575V-60Hz Energy Efficient ee		Part Number
80LH/4-56C	575V-60Hz, 1 hp	33610095
80LH/4-143TC	575V-60Hz, 1 hp	33610093
90SH/4-145TC	575V-60Hz, 1-1/2 hp	34110093
90LH/4-145TC	575V-60Hz, 2 hp	34610093
100LH/4-182TC	575V-60Hz, 3 hp	35610093
112MH/4-184TC	575V-60Hz, 5 hp	36110083

C-face 575V-60Hz Premium Efficient pe		Part Number
80LP/4-56C	575V-60Hz, 1 hp	33610295
80LP/4-143TC	575V-60Hz, 1 hp	33610293
90SP/4-145TC	575V-60Hz, 1-1/2 hp	34110293
90LP/4-145TC	575V-60Hz, 2 hp	34610293
100LP/4-182TC	575V-60Hz, 3 hp	35110293
112MP/4-184TC	575V-60Hz, 5 hp	36110293

Send Quote Requests to info@automatedpt.com
Call +1(800)985-6929 To Order or Order Online At Nordgearmotors.com

DRIVESYSTEMS

Part Numbers
C-Face Brakemotors

C-face 230/460V-60Hz Standard Efficiency - Brakemotor		Part Number
63S/4-56C BRE5 HL	230/460V-60Hz, 1/6 hp, 230VAC brake with hand release lever	31110034
63L/4-56C BRE5 HL	230/460V-60Hz, 1/4 hp, 230VAC brake with hand release lever	31610034
71S/4-56C BRE5 HL	230/460V-60Hz, 1/3 hp, 230VAC brake with hand release lever	32110034
71L/4-56C BRE5 HL	230/460V-60Hz, 1/2 hp, 230VAC brake with hand release lever	32610034
80S/4-56C BRE10 HL	230/460V-60Hz, 3/4 hp, 230VAC brake with hand release lever	33110034
80L/4-56C BRE10 HL	230/460V-60Hz, 1 hp, 230VAC brake with hand release lever	33610024

C-face 230/460V-60Hz Energy Efficient - Brakemotor ee		Part Number
80LH/4-56C BRE10 HL	230/460V-60Hz, 1 hp, 230VAC brake with hand release lever	33610082
80LH/4-143TC BRE 10 HL	230/460V-60Hz, 1 hp, 230VAC brake with hand release lever	33610084
90SH/4-145TC BRE 20 HL	230/460V-60Hz, 1-1/2 hp, 230VAC brake with hand release lever	34110084
90LH/4-145TC BRE 20 HL	230/460V-60Hz, 2 hp, 230VAC brake with hand release lever	34610084
100LH/4-182TC BRE 40 HL	230/460V-60Hz, 3 hp, 230VAC brake with hand release lever	35110084
112MH/4-184TC BRE 40 HL	230/460V-60Hz, 5 hp, 230VAC brake with hand release lever	36110084

C-face 230/460V-60Hz Premium Efficient - Brakemotor pe		Part Number
80LP/4-56C BRE10 HL	230/460V-60Hz, 1 hp, 230VAC brake with hand release lever	33610282
80LP/4-143TC BRE 10 HL	230/460V-60Hz, 1 hp, 230VAC brake with hand release lever	33610284
90SP/4-145TC BRE 20 HL	230/460V-60Hz, 1-1/2 hp, 230VAC brake with hand release lever	33610286
90LP/4-145TC BRE 20 HL	230/460V-60Hz, 2 hp, 230VAC brake with hand release lever	33610288
100LP/4-182TC BRE 40 HL	230/460V-60Hz, 3 hp, 230VAC brake with hand release lever	33610290
112MP/4-184TC BRE 40 HL	230/460V-60Hz, 5 hp, 230VAC brake with hand release lever	33610292

C-face 575V-60Hz Standard Efficiency - Brakemotor		Part Number
63S/4-56C BRE5 HL	575V-60Hz, 1/6 hp, 575VAC brake with hand release lever	31110035
63L/4-56C BRE5 HL	575V-60Hz, 1/4 hp, 575VAC brake with hand release lever	31610035
71S/4-56C BRE5 HL	575V-60Hz, 1/3 hp, 575VAC brake with hand release lever	32110035
71L/4-56C BRE5 HL	575V-60Hz, 1/2 hp, 575VAC brake with hand release lever	32610035
80S/4-56C BRE10 HL	575V-60Hz, 3/4 hp, 575VAC brake with hand release lever	33110035
80L/4-56C BRE10 HL	575V-60Hz, 1 hp, 575VAC brake with hand release lever	33610025

C-face 575V-60Hz Energy Efficient - Brakemotor ee		Part Number
80LH/4-56C BRE10 HL	230/460V-60Hz, 1 hp, 230VAC brake with hand release lever	33610083
80LH/4-143TC BRE 10 HL	575V-60Hz, 1 hp, 230VAC brake with hand release lever	33610085
90SH/4-145TC BRE 20 HL	575V-60Hz, 1-1/2 hp, 230VAC brake with hand release lever	34110085
90LH/4-145TC BRE 20 HL	575V-60Hz, 2 hp, 230VAC brake with hand release lever	34610085
100LH/4-182TC BRE 40 HL	575V-60Hz, 3 hp, 230VAC brake with hand release lever	35110085
112MH/4-184TC BRE 40 HL	575V-60Hz, 5 hp, 230VAC brake with hand release lever	36110085

C-face 575V-60Hz Premium Efficient - Brakemotor pe		Part Number
80LP/4-56C BRE10 HL	230/460V-60Hz, 1 hp, 230VAC brake with hand release lever	33610283
80LP/4-143TC BRE 10 HL	575V-60Hz, 1 hp, 230VAC brake with hand release lever	33610285
90SP/4-145TC BRE 20 HL	575V-60Hz, 1-1/2 hp, 230VAC brake with hand release lever	34110285
90LP/4-145TC BRE 20 HL	575V-60Hz, 2 hp, 230VAC brake with hand release lever	34610285
100LP/4-182TC BRE 40 HL	575V-60Hz, 3 hp, 230VAC brake with hand release lever	35110285
112MP/4-184TC BRE 40 HL	575V-60Hz, 5 hp, 230VAC brake with hand release lever	36110285

Send Quote Requests to info@automatedpt.com
Call +1(800)985-6929 To Order or Order Online At Nordgearmotors.com

Send Quote Requests to info@automatedpt.com
Call +1(800)985-6929 To Order or Order Online At Nordgearmotors.com

Notes

NOTES

Send Quote Requests to info@automatedpt.com
Call +1(800)985-6929 To Order or Order Online At Nordgearmotors.com

MINICASE® Dimensions

Dimensions

- SK 1SMI31
- SK 1SMI40
- SK 1SMI50
- SK 1SMI63
- SK 1SMI75
- SK 1SMI Options

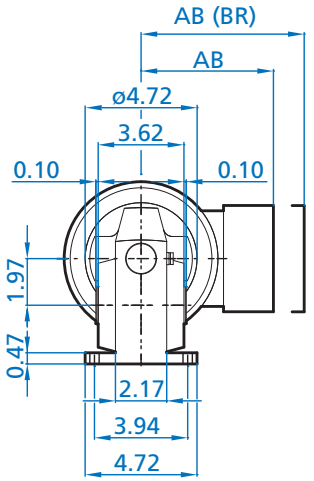

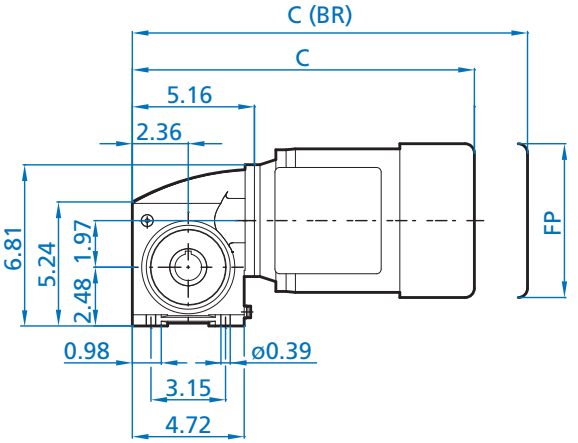

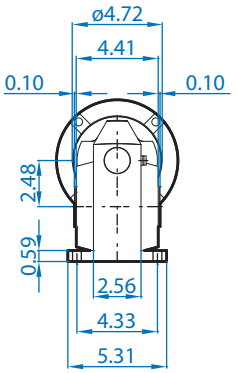

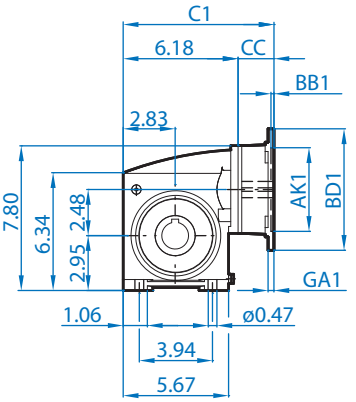

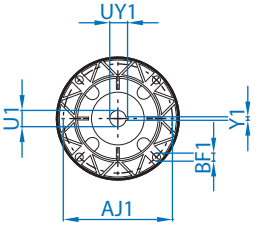

DRIVESYSTEMS

www.nord.com

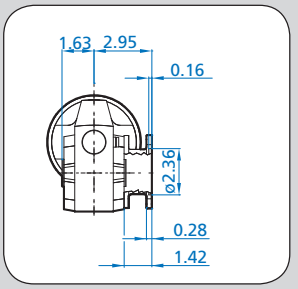

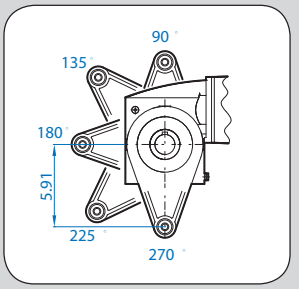

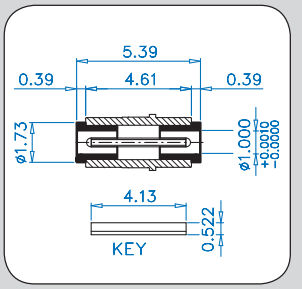

SK 1SMI31

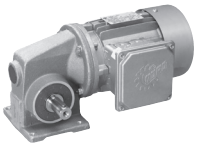

NORD DRIVESYSTEMS

SK 1SMID31 VX + Motor

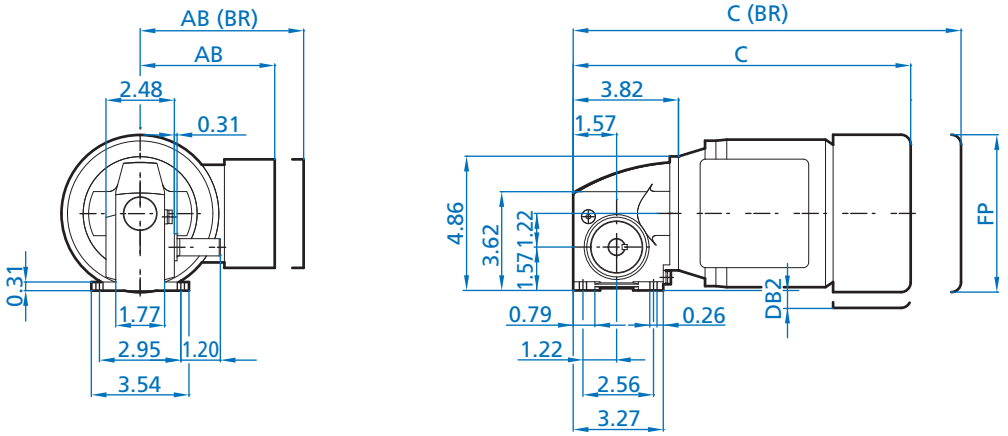

Motor Dimensions

Standard efficiency	63S/L	71S/L
Energy efficiency		
Premium efficiency		
AB	4.51	4.86
AB (BR)	4.84	5.24
C	11.41	12.26
C (BR)	13.61	14.54
FP	5.09	5.72
DB2	N/A	0.07

(BR) Denotes Brakemotor

SK 1SMI31 V (Solid Shaft Detail)

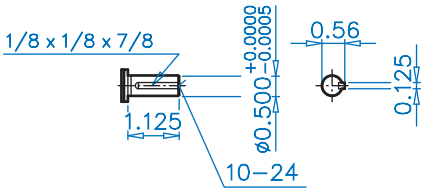

SK 1SMI31 VX + NEMA

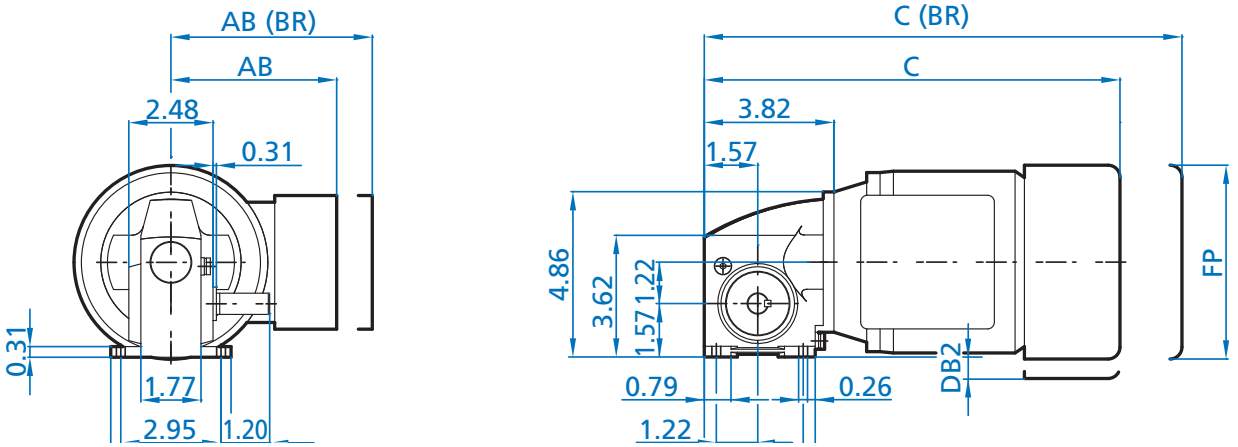

NEMA Dimensions

Type	AJ1	AK1	BB1	BD1	BF1	GA1	U1	UY1	Y1	C1	CC	DB2
48C	3.75	3.00	0.19	4.33	0.28	0.39	0.50	0.56	0.13	5.28	1.46	N/A
56C	5.875	4.50	0.18	6.54	0.43	0.47	0.625	0.71	0.188	5.43	1.61	0.48

DIMENSIONS
Dimensions in Inches
ALTERNATE SHAFTS SEE PAGES 207 - 211

Send Quote Requests to info@automatedpt.com
Call +1(800)985-6929 To Order or Order Online At Nordgearmotors.com

NORD DRIVESYSTEMS

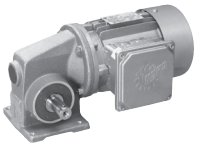

SK 1SMI31 VZ/VF & Solid Shaft Options

SK 1SMI31 VZ

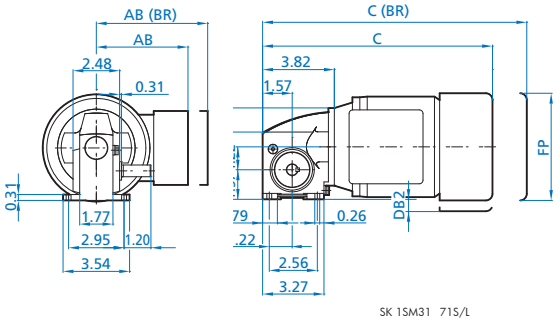

SK 1SMI31 VF - F/I

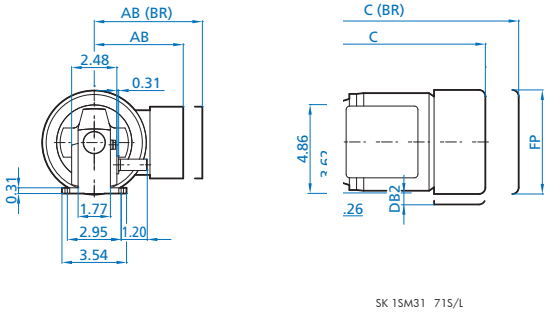

SK 1SMI31 VF - F/II

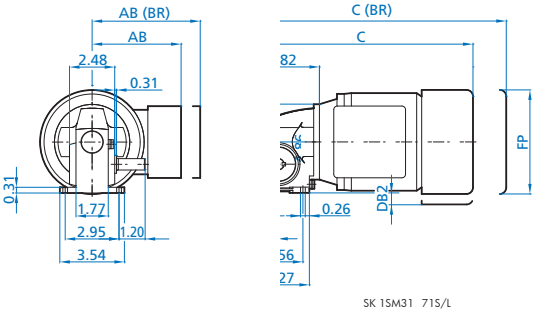

SK 1SMI31 VF - F/III

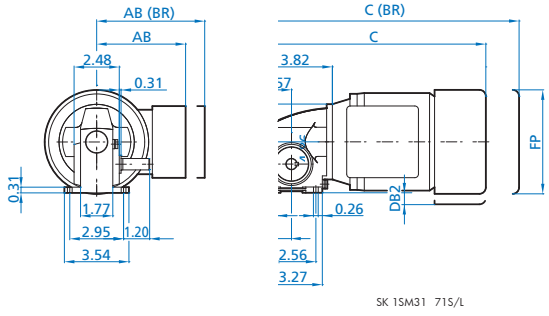

SK 1SMI31 VZH - Solid Shaft + Shaft Cover

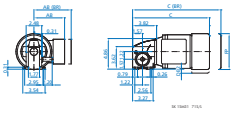

SK 1SMI31 LX - Double Solid Shaft

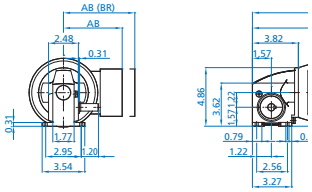

Dimensions in Inches
DIMENSIONS
ALTERNATE SHAFTS SEE PAGES 207 - 211

Send Quote Requests to info@automatedpt.com
Call +1(800)985-6929 To Order or Order Online At Nordgearmotors.com

SK 1SMI31 AX

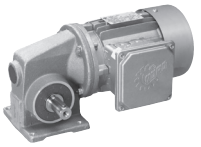

NORD DRIVESYSTEMS

SK 1SMID31 AX + Motor

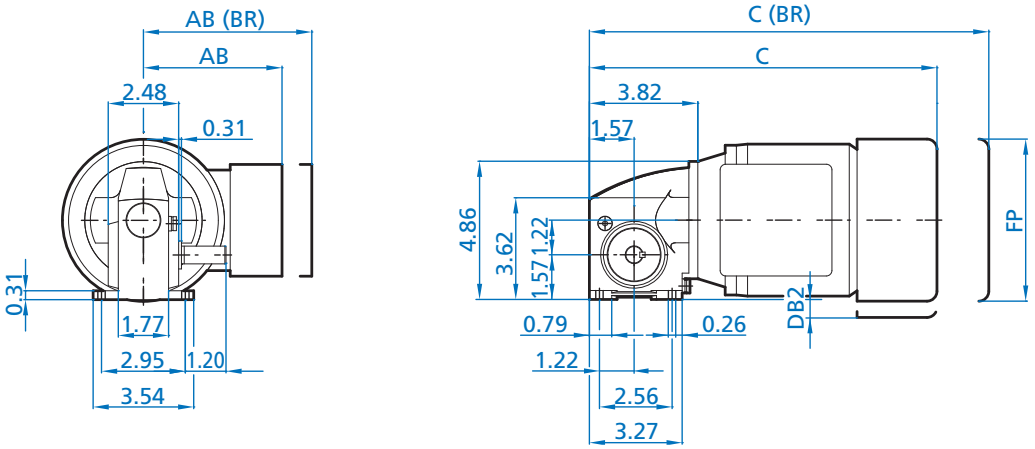

Motor Dimensions

Standard efficiency	63S/L	71S/L
Energy efficiency		
Premium efficiency		
AB	4.51	4.86
AB (BR)	4.84	5.24
C	11.41	12.26
C (BR)	13.61	14.54
FP	5.09	5.72
DB2	N/A	0.07

(BR) Denotes Brakemotor

SK 1SMI31 A (Hollow Shaft Detail)

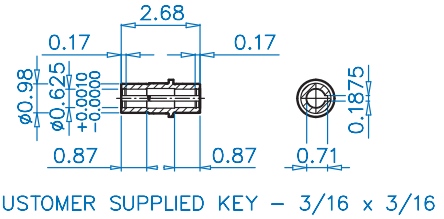

ALTERNATE SHAFTS SEE PAGES 207 - 211

SK 1SMI31 AX + NEMA

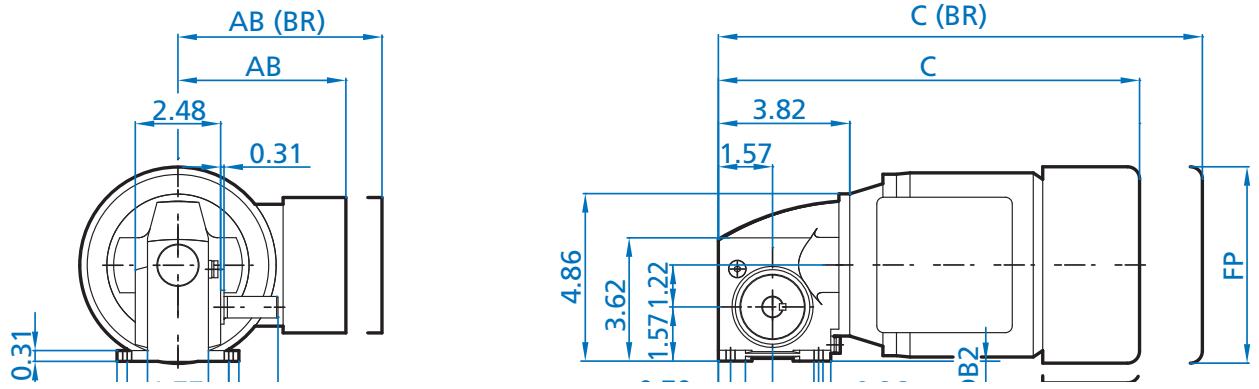

NEMA Dimensions

Type	AJ1	AK1	BB1	BD1	BF1	GA1	U1	UY1	Y1	C1	CC	DB2
48C	3.75	3.00	0.19	4.33	0.28	0.39	0.50	0.56	0.13	5.28	1.46	N/A
56C	5.875	4.50	0.18	6.54	0.43	0.47	0.625	0.71	0.188	5.43	1.61	0.48

Send Quote Requests to info@automatedpt.com
Call +1(800)985-6929 To Order or Order Online At Nordgearmotors.com

DRIVESYSTEMS

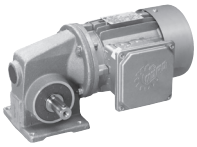

SK 1SMI31 AZ/AF & Hollow Shaft Options

SK 1SMI31 AZ

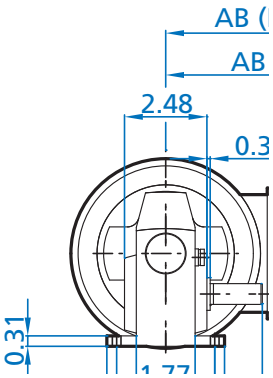

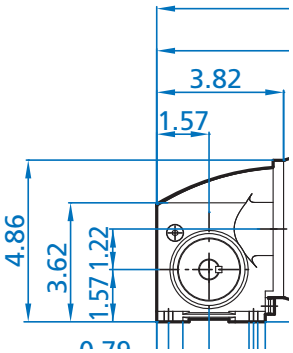

SK 1SMI31 AF - F/I

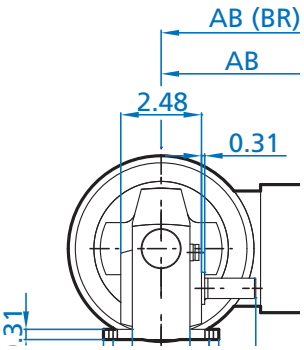

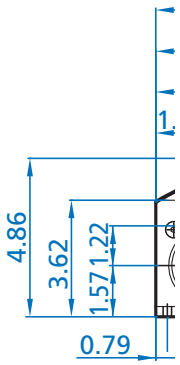

SK 1SMI31 AF - F/II

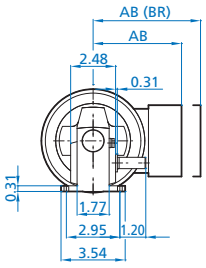

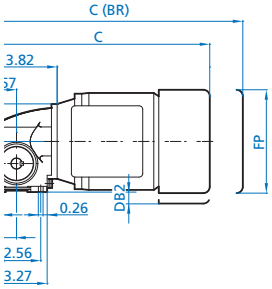

SK 1SM31 71S/L

SK 1SMI31 AF - F/III

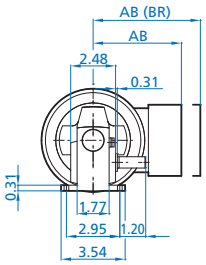

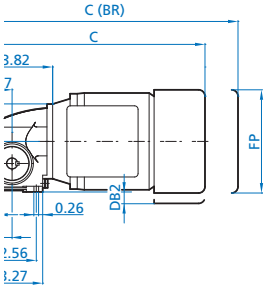

SK 1SM31 71S/L

SK 1SMI31 AZD (Torque Arm)

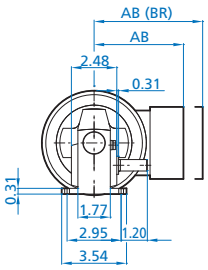

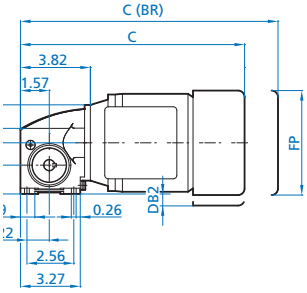

SK 1SM31 71S/L

SK 1SMI31 AZH (Shaft Cover)

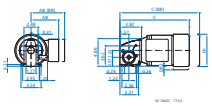

Dimensions in Inches

DIMENSIONS

ALTERNATE SHAFTS SEE PAGES 207 - 211

Send Quote Requests to info@automatedpt.com
Call +1(800)985-6929 To Order or Order Online At Nordgearmotors.com

SK 1SMI31

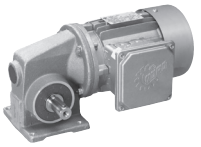

NORD DRIVESYSTEMS

SK 1SMI31 VX + NEMA + Motor

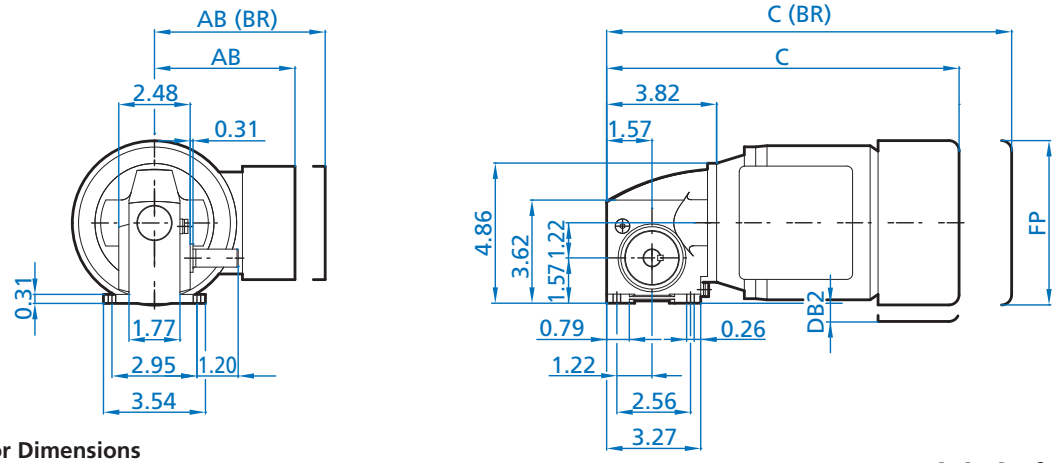

Motor Dimensions

Standard efficiency	56C-63S/L	56C-71S/L	56C-80S/L
Energy efficiency			56C-80LH
Premium efficiency			56C-80LP
AB	4.51	4.86	5.59
AB (BR)	4.84	5.24	5.59
C	13.02	13.87	14.58
C (BR)	15.21	16.16	17.10
CC	1.61	1.61	1.61
FP	5.09	5.72	6.43
DB2	0.48	0.48	0.48

(BR) Denotes Brakemotor

SK 1SMI31 V (Solid Shaft Detail)

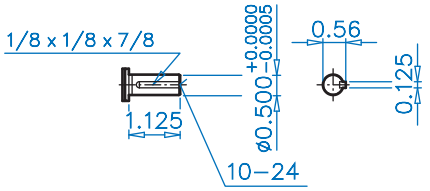

SK 1SMI31 AX + NEMA + Motor

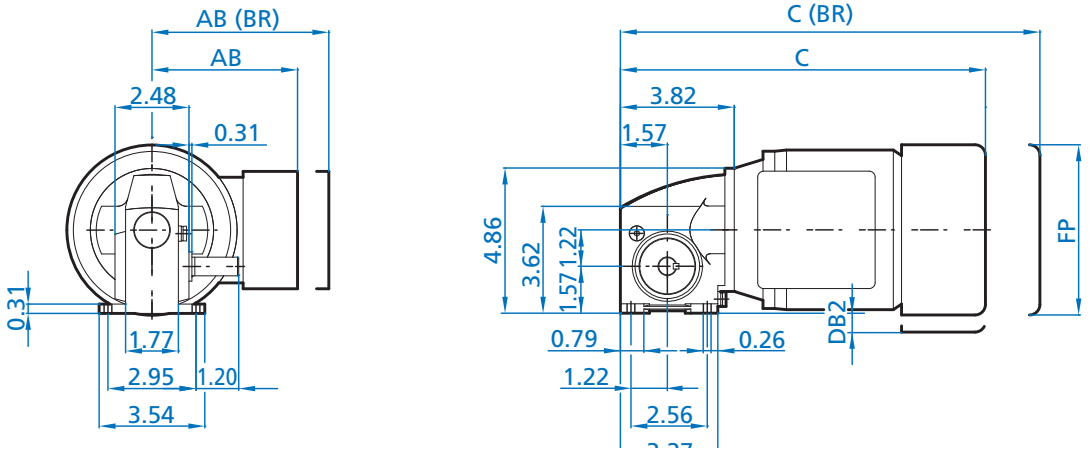

Motor Dimensions

Standard efficiency	56C-63S/L	56C-71S/L	56C-80S/L
Energy efficiency			56C-80LH
Premium efficiency			56C-80LP
AB	4.51	4.86	5.59
AB (BR)	4.84	5.24	5.59
C	13.02	13.87	14.58
C (BR)	15.21	16.16	17.10
CC	1.61	1.61	1.61
FP	5.09	5.72	6.43
DB2	0.48	0.48	0.48

(BR) Denotes Brakemotor

SK 1SMI31 A (Hollow Shaft Detail)

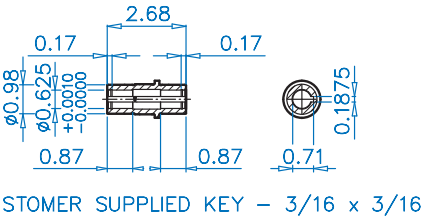

ALTERNATE SHAFTS SEE PAGES 207 - 211

Send Quote Requests to info@automatedpt.com
Call +1(800)985-6929 To Order or Order Online At Nordgearmotors.com

NORD DRIVESYSTEMS

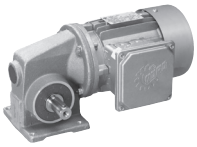

SK 1SMI31

SK 1SMI31 VX + IEC + Motor

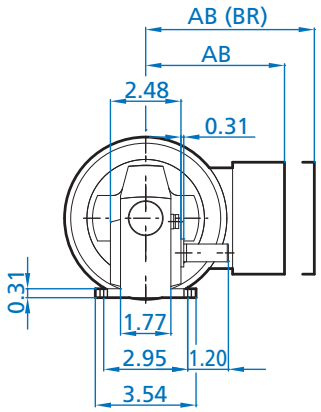

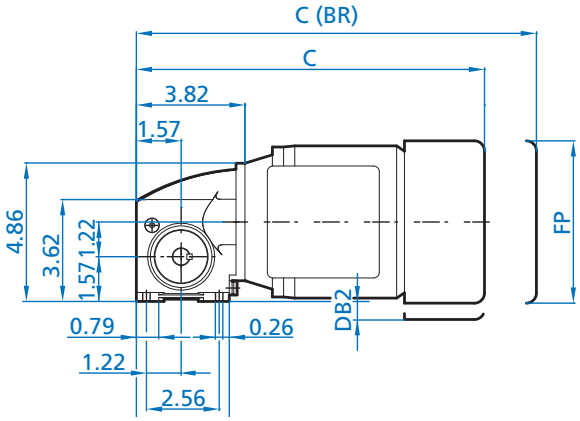

Motor Dimensions

Standard efficiency	63S/L	71S/L
Energy efficiency		
Premium efficiency		
AB	4.51	4.86
AB (BR)	4.84	5.24
C	12.57	13.42
C (BR)	14.77	15.70
O	1.16	1.16
FP	5.09	5.72
DB2	N/A	0.07

(BR) Denotes Brakemotor

SK 1SMI31 V (Solid Shaft Detail)

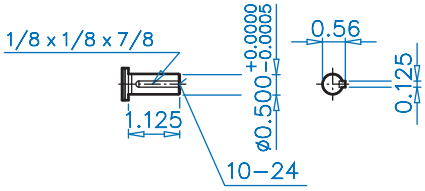

SK 1SM31 AX + IEC + Motor

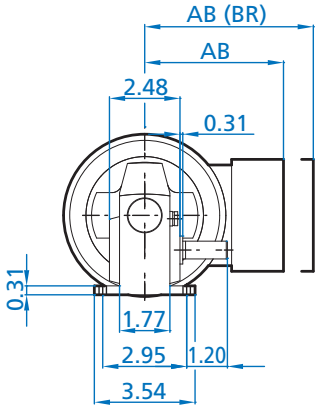

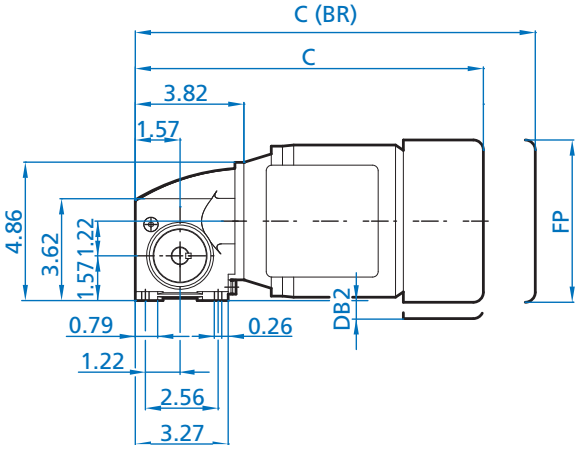

Motor Dimensions

Standard efficiency	63S/L	71S/L
Energy efficiency		
Premium efficiency		
AB	4.51	4.86
AB (BR)	4.84	5.24
C	12.57	13.42
C (BR)	14.77	15.70
O	1.16	1.16
FP	5.09	5.72
DB2	N/A	0.07

(BR) Denotes Brakemotor

SK 1SMI31 A (Hollow Shaft Detail)

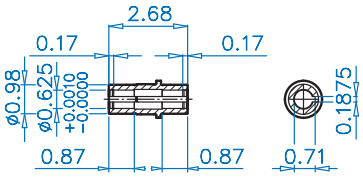

CUSTOMER SUPPLIED KEY – 3/16 x 3/16

ALTERNATE SHAFTS SEE PAGES 207 - 211

Send Quote Requests to info@automatedpt.com
Call +1(800)985-6929 To Order or Order Online At Nordgearmotors.com

SK 1SMI40

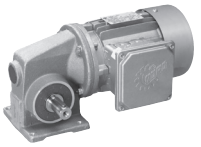

NORD DRIVESYSTEMS

SK 1SMID40 VX + Motor

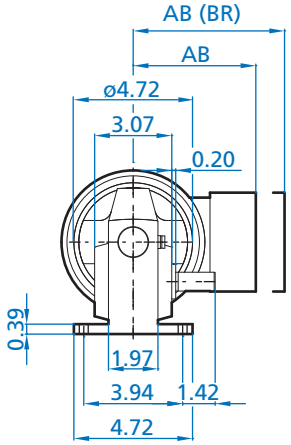

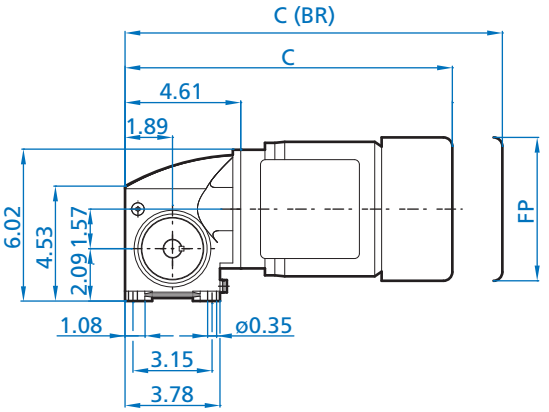

Motor Dimensions

Standard efficiency	63S/L	71S/L	80S/L
Energy efficiency			80LH
Premium efficiency			80LP
AB	4.51	4.86	5.59
AB (BR)	4.84	5.24	5.59
C	12.27	13.13	13.99
C (BR)	14.48	15.41	16.51
FP	5.09	5.72	6.43

(BR) Denotes Brakemotor

SK 1SMI40 V (Solid Shaft Detail)

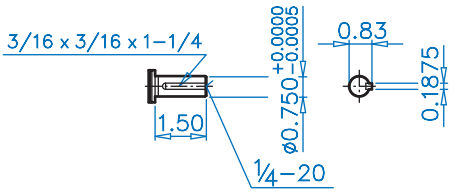

SK 1SMI40 VX + NEMA

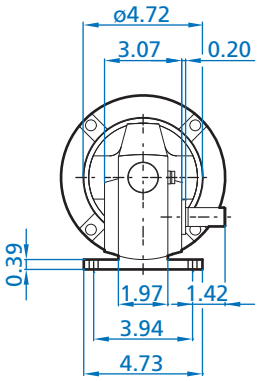

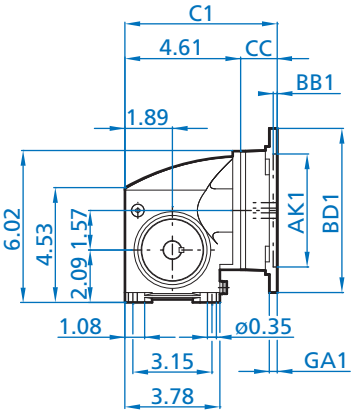

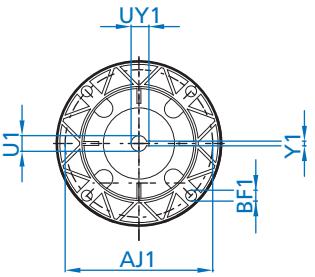

NEMA Dimensions

Type	AJ1	AK1	BB1	BD1	BF1	GA1	U1	UY1	Y1	C1	CC
56C	5.875	4.50	0.18	6.54	0.43	0.47	0.625	0.71	0.188	6.14	1.46
140TC	5.875	4.50	0.18	6.54	0.43	0.47	0.875	0.96	0.188	6.61	1.93

DIMENSIONS
Dimensions in Inches
ALTERNATE SHAFTS SEE PAGES 207 - 211

Send Quote Requests to info@automatedpt.com
Call +1(800)985-6929 To Order or Order Online At Nordgearmotors.com

DRIVESYSTEMS

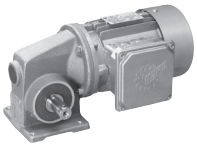

SK 1SMI40 VZ/VF & Solid Shaft Options

SK 1SMI40 VZ

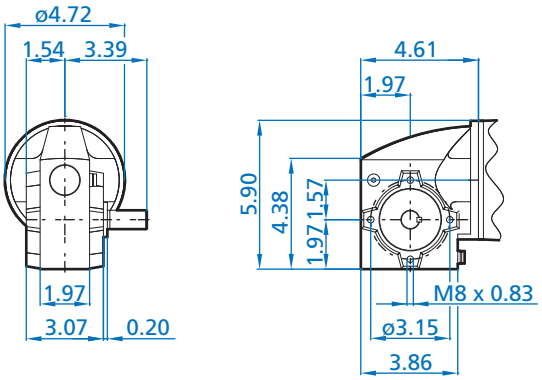

SK 1SMI40 VF - F/I

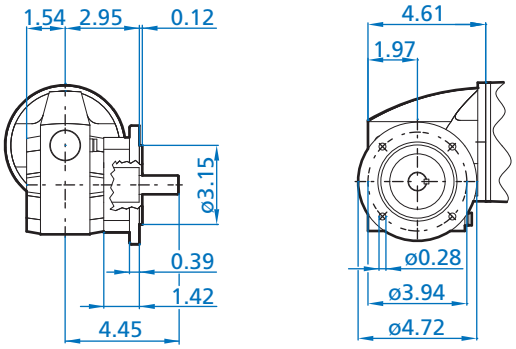

SK 1SMI40 VF - F/II

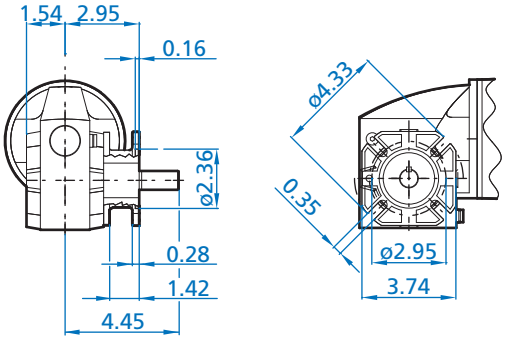

SK 1SMI40 VZH - Plug-In Shaft + Shaft Cover

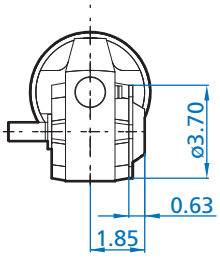

SK 1SMI40 LX - Double Solid Shaft

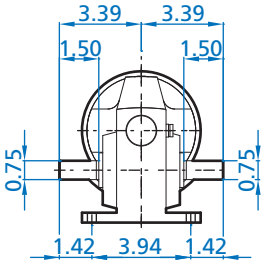

ALTERNATE SHAFTS SEE PAGES 207 - 211

Send Quote Requests to info@automatedpt.com
Call +1(800)985-6929 To Order or Order Online At Nordgearmotors.com

SK 1SMI40 AX

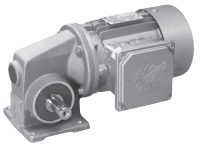

NORD DRIVESYSTEMS

SK 1SMID40 AX + Motor

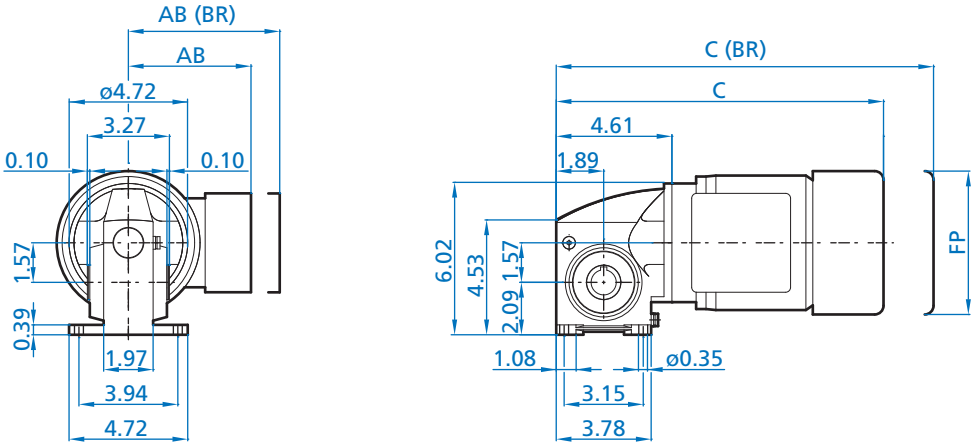

Motor Dimensions

Standard efficiency	63S/L	71S/L	80S/L
Energy efficiency			80LH
Premium efficiency			80LP
AB	4.51	4.86	5.59
AB (BR)	4.84	5.24	5.59
C	12.27	13.13	13.99
C (BR)	14.48	15.41	16.51
FP	5.09	5.72	6.43

(BR) Denotes Brakemotor

SK 1SMI40 A (Hollow Shaft Detail)

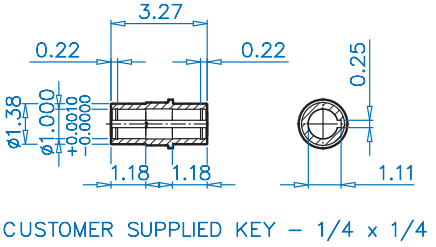

ALTERNATE SHAFTS SEE PAGES 207 - 211

SK 1SMI40 AX + NEMA Input

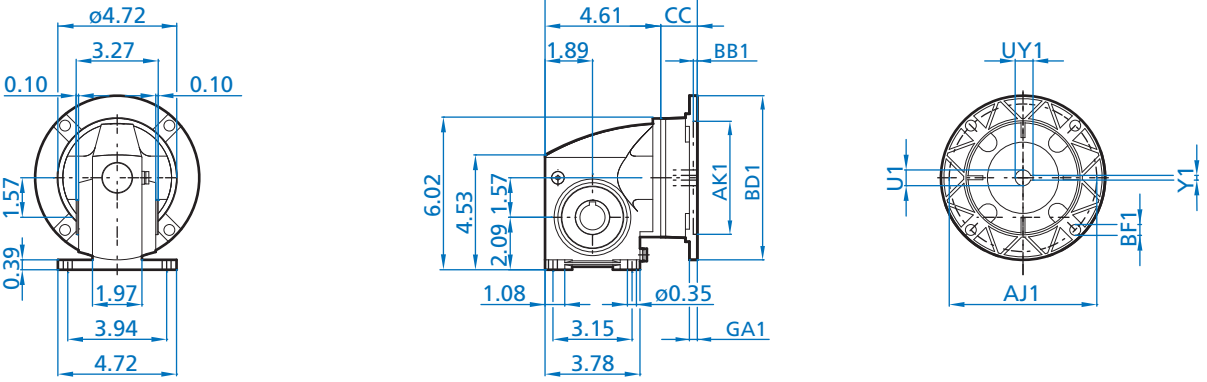

NEMA Dimensions

Type	AJ1	AK1	BB1	BD1	BF1	GA1	U1	UY1	Y1	C1	CC
56C	5.875	4.50	0.18	6.54	0.43	0.47	0.625	0.71	0.188	6.14	1.46
140TC	5.875	4.50	0.18	6.54	0.43	0.47	0.875	0.96	0.188	6.61	1.93

Send Quote Requests to info@automatedpt.com
Call +1(800)985-6929 To Order or Order Online At Nordgearmotors.com

DRIVESYSTEMS

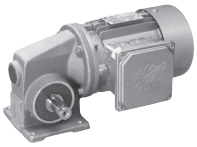

SK 1SMI40 AZ/AF & Hollow Shaft Options

SK 1SMI40 AZ

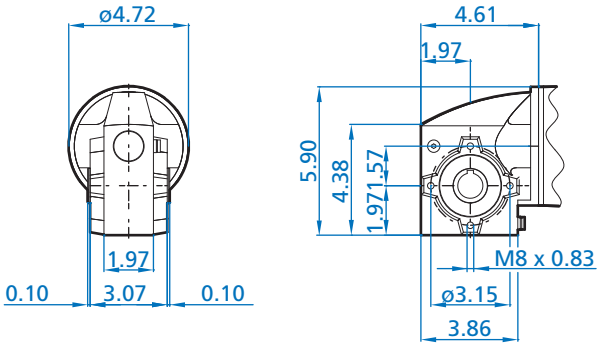

SK 1SMI40 AF - F/I

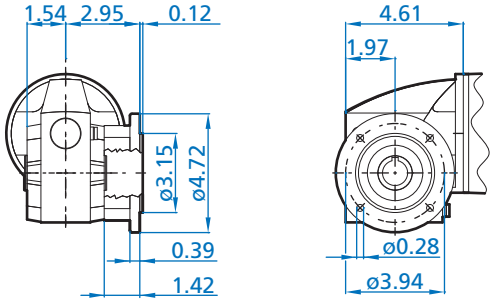

SK 1SMI40 AF - F/II

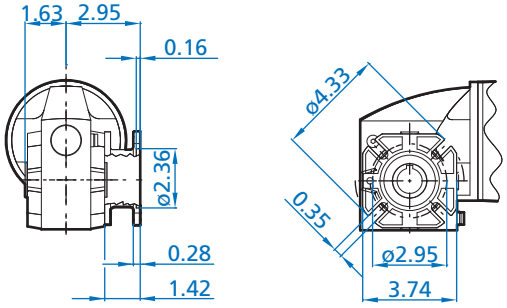

SK 1SMI40 AZD/I, III (Torque Arm)

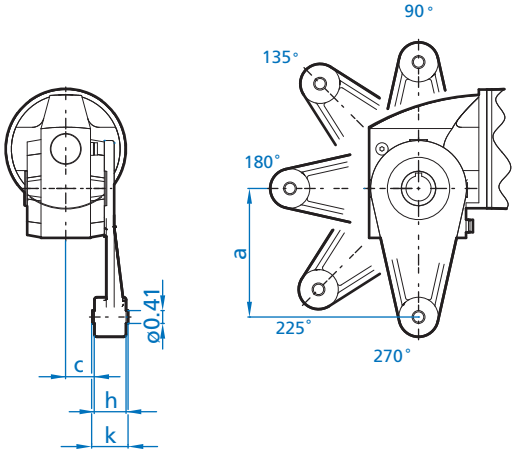

Torque Arm Dimensions

	a	c	h	k	Part number
I*	5.12	1.14	1.26	1.42	60493900
III	3.94	1.34	0.55	0.55	60490770

* Standard torque arm offering, other options must be requested

SK 1SMI40 AZH (Shaft Cover)

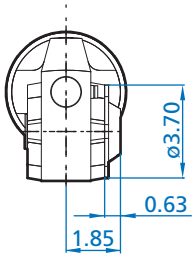

Dimensions in Inches
DIMENSIONS
ALTERNATE SHAFTS SEE PAGES 207 - 211

Send Quote Requests to info@automatedpt.com
Call +1(800)985-6929 To Order or Order Online At Nordgearmotors.com

SK 1SMI40

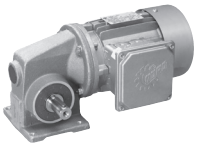

NORD DRIVESYSTEMS

SK 1SMI40 VX + NEMA + Motor

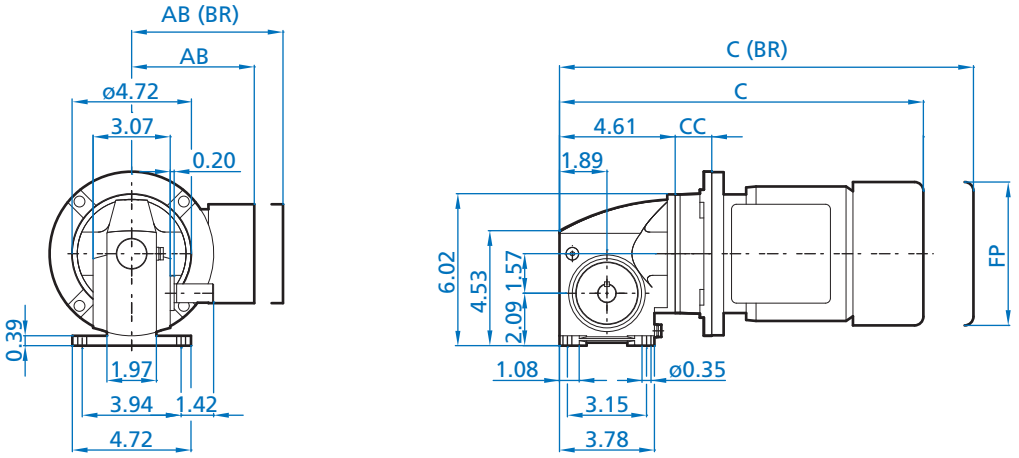

Motor Dimensions

Standard eff.	56C-63S/L	56C-71S/L	56C-80S/L	140TC-80L	140TC-90S/L
Energy eff.			56C-80LH	140TC-80LH	140TC-90SH/LH
Premium eff.			56C-80LP	140TC-80LP	140TC-90SP/LP
AB	4.51	4.86	5.59	5.59	5.79
AB (BR)	4.84	5.24	5.59	5.59	5.79
C	13.73	14.58	15.45	15.92	17.46
C (BR)	15.93	16.87	17.97	18.44	20.41
CC	1.46	1.46	1.46	1.93	1.93
FP	5.09	5.72	6.43	6.43	7.19
DB2	N/A	N/A	N/A	N/A	0.33

(BR) Denotes Brakemotor

SK 1SMI40 V (Solid Shaft Detail)

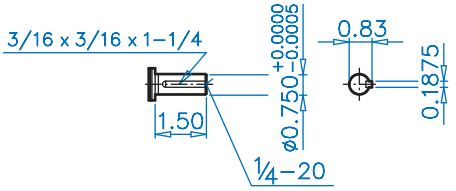

SK 1SMI40 AX + NEMA + Motor

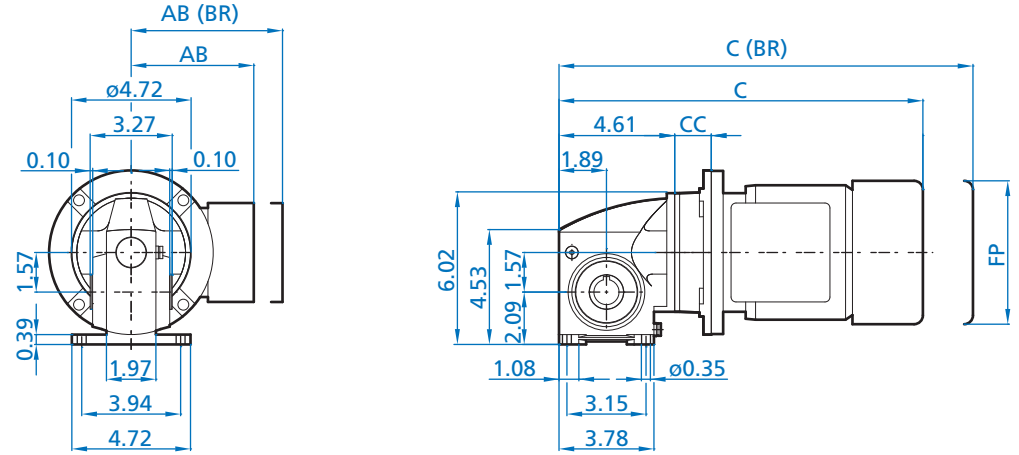

Motor Dimensions

Standard eff.	56C-63S/L	56C-71S/L	56C-80S/L	140TC-80L	140TC-90S/L
Energy eff.			56C-80LH	140TC-80LH	140TC-90SH/LH
Premium eff.			56C-80LP	140TC-80LP	140TC-90SP/LP
AB	4.51	4.86	5.59	5.59	5.79
AB (BR)	4.84	5.24	5.59	5.59	5.79
C	13.73	14.58	15.45	15.92	17.46
C (BR)	15.93	16.87	17.97	18.44	20.41
CC	1.46	1.46	1.46	1.93	1.93
FP	5.09	5.72	6.43	6.43	7.19
DB2	N/A	N/A	N/A	N/A	0.33

(BR) Denotes Brakemotor

SK 1SMI40 A (Hollow Shaft Detail)

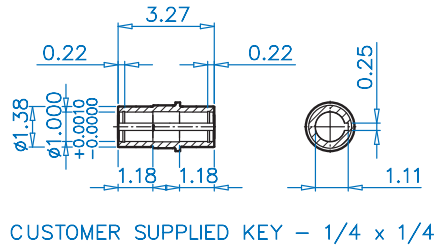

ALTERNATE SHAFTS SEE PAGES 207 - 211

Send Quote Requests to info@automatedpt.com
Call +1(800)985-6929 To Order or Order Online At Nordgearmotors.com

DRIVESYSTEMS

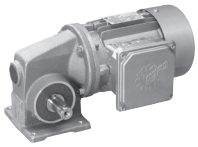

SK 1SMI40

SK 1SMI40 VX + IEC + Motor

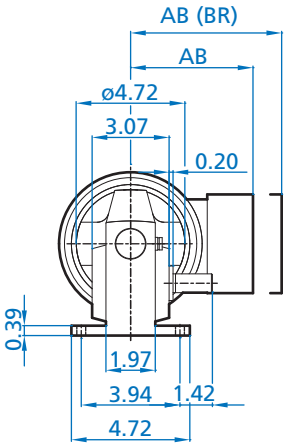

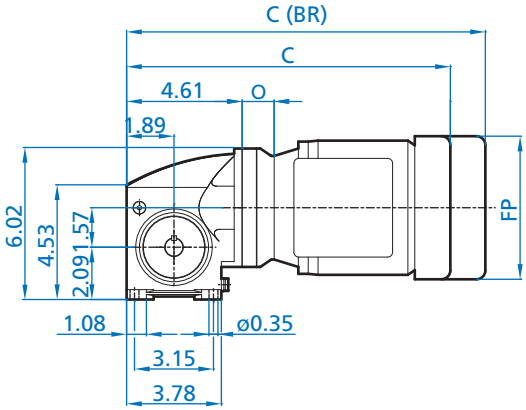

Motor Dimensions

Standard efficiency	63S/L	71S/L	80S/L
Energy efficiency			80SH/LH
Premium efficiency			80LP
AB	4.51	4.86	5.59
AB (BR)	4.84	5.24	5.59
C	13.55	14.41	15.27
C (BR)	15.76	16.69	17.79
O	1.28	1.28	1.28
FP	5.09	5.72	6.43

(BR) Denotes Brakemotor

SK 1SMI40 V (Solid Shaft Detail)

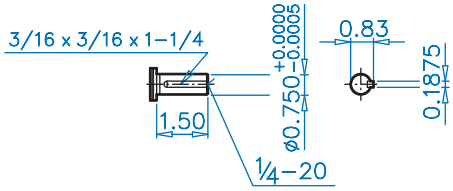

SK 1SMI40 AX + IEC + Motor

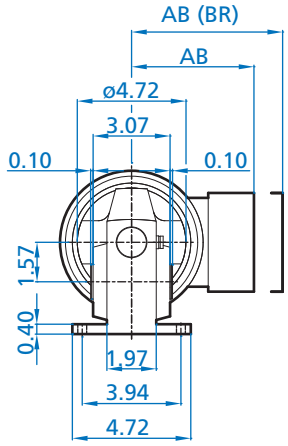

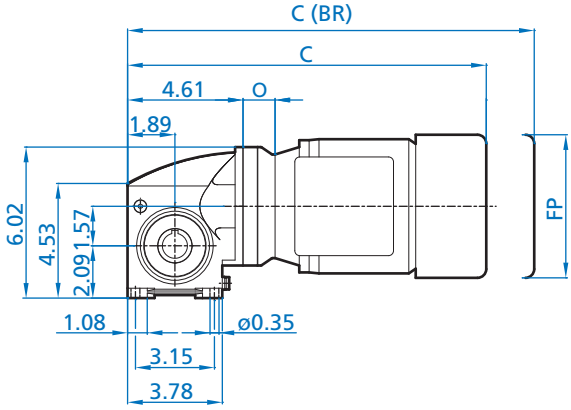

Motor Dimensions

Standard efficiency	63S/L	71S/L	80S/L
Energy efficiency			80SH/LH
Premium efficiency			80LP
AB	4.51	4.86	5.59
AB (BR)	4.84	5.24	5.59
C	13.55	14.41	15.27
C (BR)	15.76	16.69	17.79
O	1.28	1.28	1.28
FP	5.09	5.72	6.43

(BR) Denotes Brakemotor

SK 1SMI40 A (Hollow Shaft Detail)

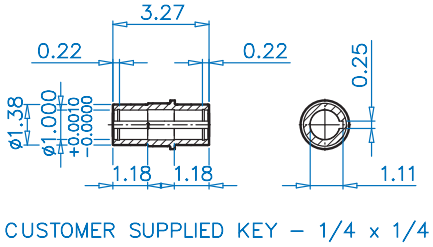

ALTERNATE SHAFTS SEE PAGES 207 - 211

Send Quote Requests to info@automatedpt.com
Call +1(800)985-6929 To Order or Order Online At Nordgearmotors.com

SK 1SMI 50

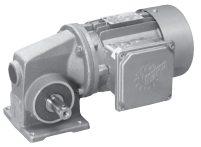

NORD DRIVESYSTEMS

SK 1SMID50 VX + Motor

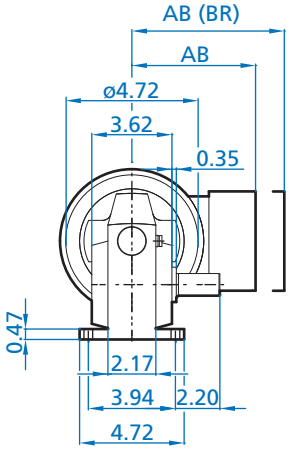

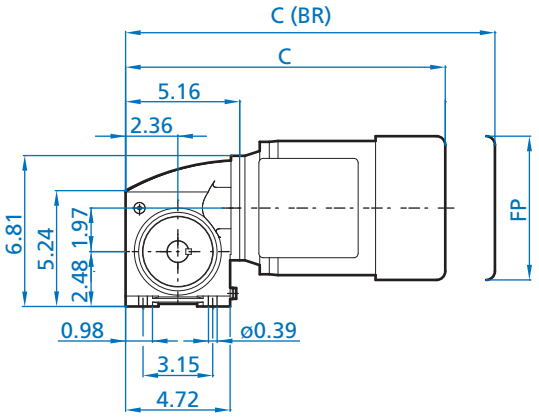

Motor Dimensions

Standard efficiency	71S/L	80S/L	90S/L
Energy efficiency		80LH	90SH/LH
Premium efficiency		80LP	90SP/LP
AB	4.86	5.59	5.79
AB (BR)	5.24	5.59	5.79
C	13.60	14.46	16.00
C (BR)	15.88	16.98	18.95
FP	5.72	6.43	7.19

(BR) Denotes Brakemotor

SK 1SMI50 V (Solid Shaft Detail)

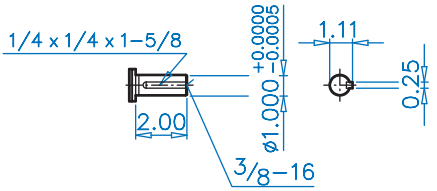

ALTERNATE SHAFTS SEE PAGES 207 - 211

SK 1SMI50 VX + NEMA

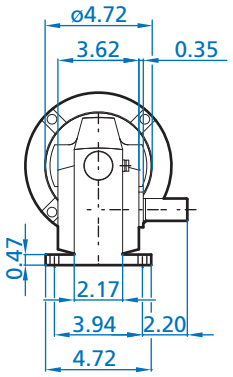

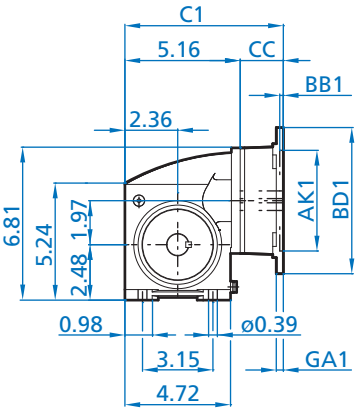

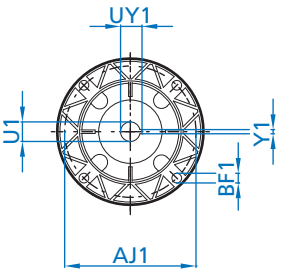

NEMA Dimensions

Type	AJ1	AK1	BB1	BD1	BF1	GA1	U1	UY1	Y1	C1	CC
56C	5.875	4.50	0.18	6.54	0.43	0.47	0.625	0.71	0.188	6.61	1.46
140TC	5.875	4.50	0.18	6.54	0.43	0.47	0.875	0.96	0.188	7.09	1.93

Send Quote Requests to info@automatedpt.com
Call +1(800)985-6929 To Order or Order Online At Nordgearmotors.com

DRIVESYSTEMS

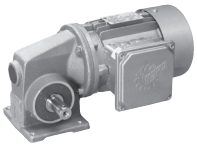

SK 1SMI50 VZ/VF & Solid Shaft Options

SK 1SMI50 VZ

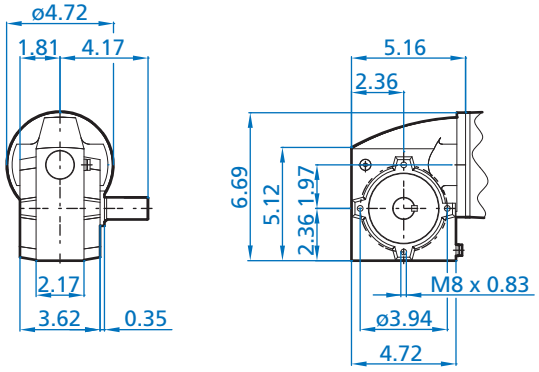

SK 1SMI50 VF - F/I

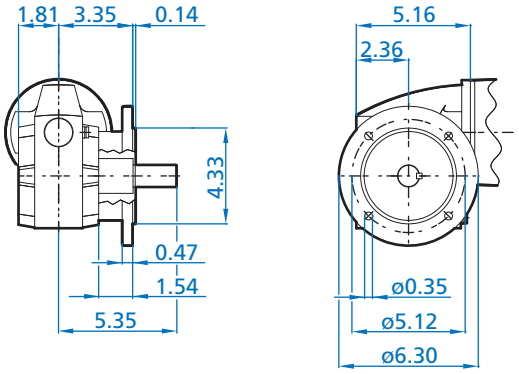

SK 1SMI50 VF - F/II

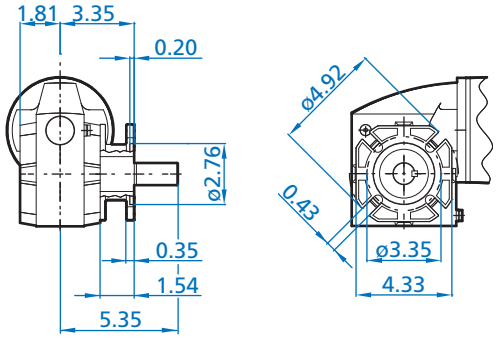

SK 1SMI50 VF - F/III

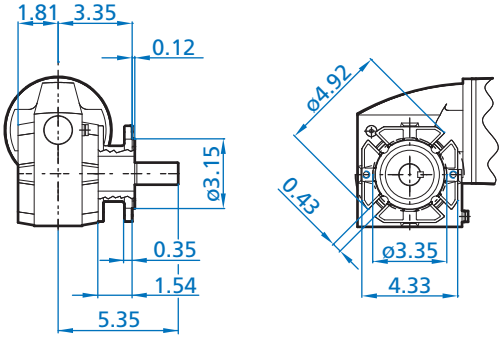

SK 1SMI50 VZH - Solid Shaft + Shaft Cover

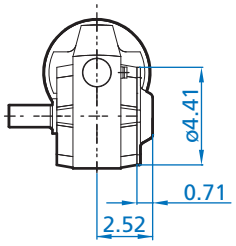

SK 1SMI50 LX - Double Solid Shaft

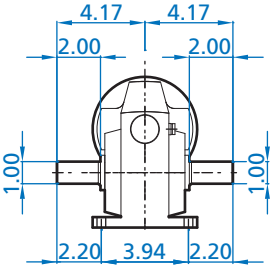

ALTERNATE SHAFTS SEE PAGES 207 - 211

Send Quote Requests to info@automatedpt.com
Call +1(800)985-6929 To Order or Order Online At Nordgearmotors.com

SK 1SMI50 AX

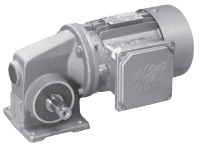

NORD DRIVESYSTEMS

SK 1SMID50 AX + Motor

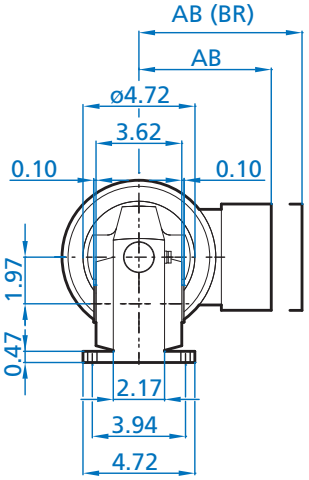

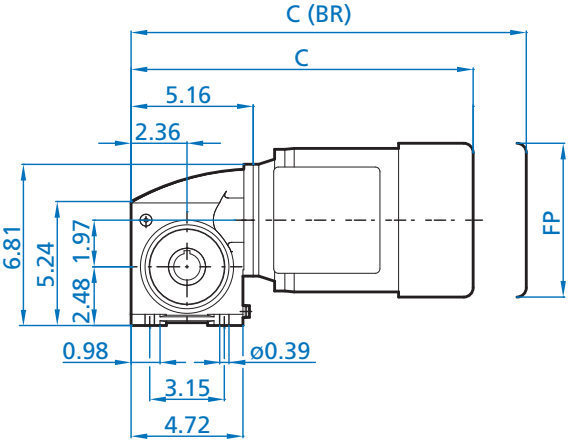

Motor Dimensions

Standard efficiency	71S/L	80S/L	90S/L
Energy efficiency		80LH	90SH/LH
Premium efficiency		80LP	90SP/LP
AB	4.86	5.59	5.79
AB (BR)	5.24	5.59	5.79
C	13.60	14.46	16.00
C (BR)	15.88	16.98	18.95
FP	5.72	6.43	7.19

(BR) Denotes Brakemotor

SK 1SMI50 A (Hollow Shaft Detail)

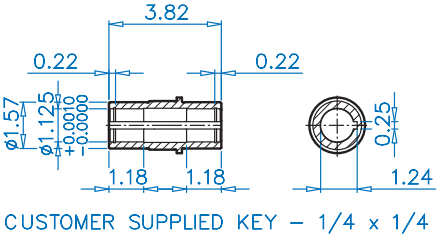

ALTERNATE SHAFTS SEE PAGES 207 - 211

SK 1SMI50 AX + NEMA

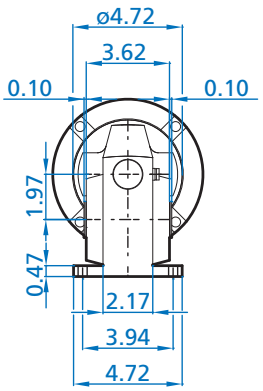

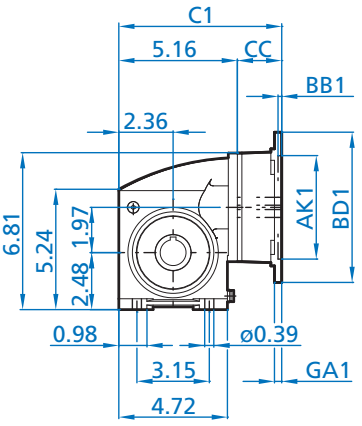

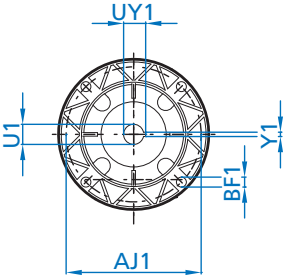

NEMA Dimensions

Type	AJ1	AK1	BB1	BD1	BF1	GA1	U1	UY1	Y1	C1	CC
56C	5.875	4.50	0.18	6.54	0.43	0.47	0.625	0.71	0.188	6.61	1.46
140TC	5.875	4.50	0.18	6.54	0.43	0.47	0.875	0.96	0.188	7.09	1.93

Send Quote Requests to info@automatedpt.com
Call +1(800)985-6929 To Order or Order Online At Nordgearmotors.com

NORD DRIVESYSTEMS

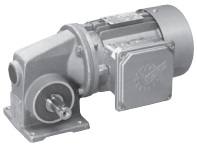

SK 1SMI50 AZ/AF & Hollow Shaft Options

SK 1SMI50 AZ

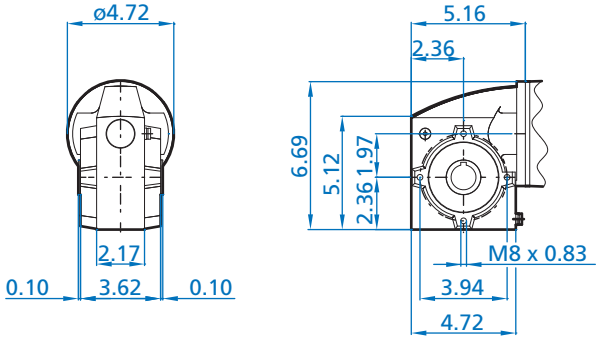

SK 1SMI50 AF - F/I

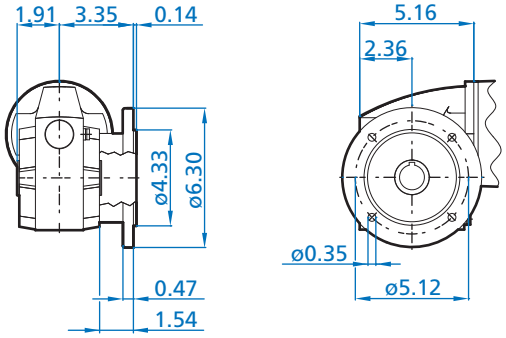

SK 1SMI50 AF - F/II

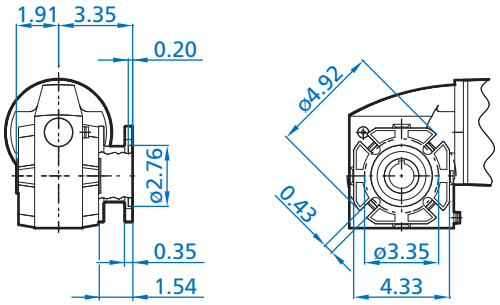

SK 1SMI50 AF - F/III

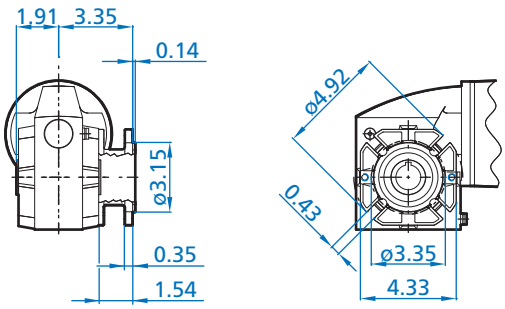

SK 1SMI50 AZH (Shaft Cover)

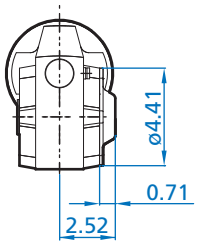

SK 1SMI50 AZD/I, II, II

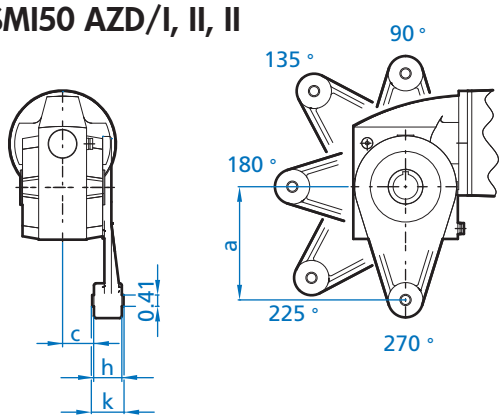

SK 1SMI50 J (1.00" Bushing Kit)

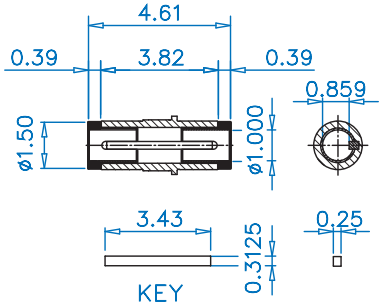

Torque Arm Dimensions

	a	c	h	k	Part number
I*	5.12	1.14	1.26	1.42	60593900
II	4.33	1.61	0.55	0.55	60593920
III	3.94	1.34	0.55	0.55	60593910

* Standard torque arm offering, other options must be requested

Dimensions in Inches
DIMENSIONS
ALTERNATE SHAFTS SEE PAGES 207 - 211

Send Quote Requests to info@automatedpt.com
Call +1(800)985-6929 To Order or Order Online At Nordgearmotors.com

SK 1SMI50

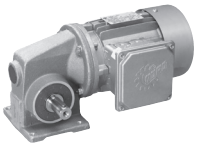

NORD DRIVESYSTEMS

SK 1SMI50 VX + NEMA + Motor

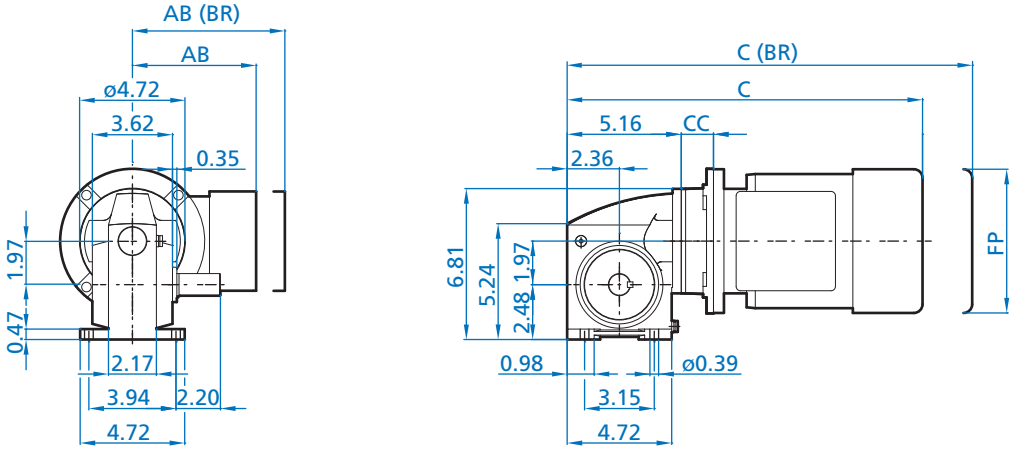

Motor Dimensions

Standard eff.	56C-63S/L	56C-71S/L	56C-80S/L	140TC-80L	140TC-90S/L
Energy eff.			56C-80LH	140TC-80LH	140TC-90SH/LH
Premium eff.			56C-80LP	140TC-80LP	140TC-90SP/LP
AB	4.51	4.86	5.59	5.59	5.79
AB (BR)	4.84	5.24	5.59	5.59	5.79
C	14.20	15.06	15.92	16.39	17.93
C (BR)	16.41	17.34	18.44	18.91	20.88
CC	1.46	1.46	1.46	1.93	1.93
FP	5.09	5.72	6.43	6.43	7.19

(BR) Denotes Brakemotor

SK 1SMI50 V (Solid Shaft Detail)

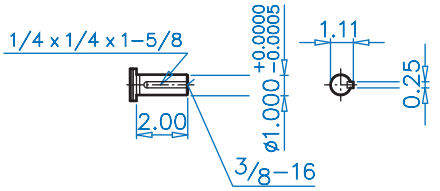

ALTERNATE SHAFTS SEE PAGES 207 - 211

SK 1SMI50 AX + NEMA + Motor

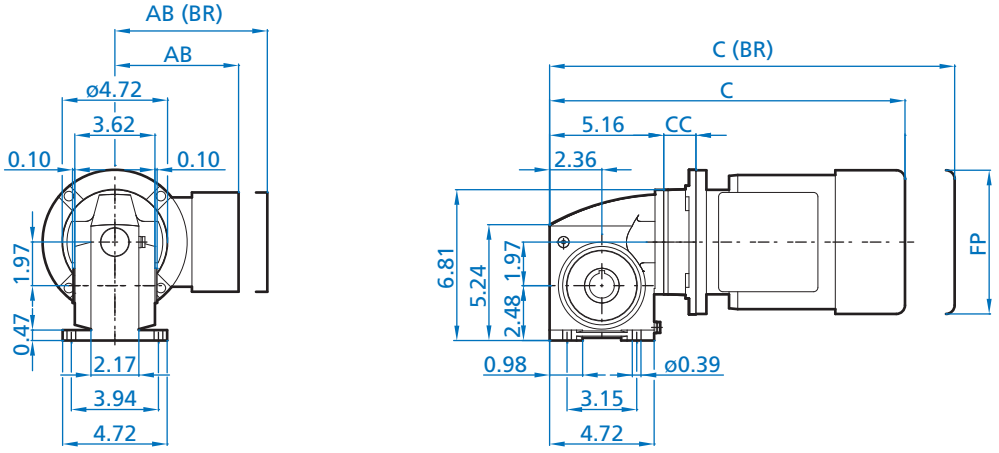

Motor Dimensions

Standard eff.	56C-63S/L	56C-71S/L	56C-80S/L	140TC-80L	140TC-90S/L
Energy eff.			56C-80LH	140TC-80LH	140TC-90SH/LH
Premium eff.			56C-80LP	140TC-80LP	140TC-90SP/LP
AB	4.51	4.86	5.59	5.59	5.79
AB (BR)	4.84	5.24	5.59	5.59	5.79
C	14.20	15.06	15.92	16.39	17.93
C (BR)	16.41	17.34	18.44	18.91	20.88
CC	1.46	1.46	1.46	1.93	1.93
FP	5.09	5.72	6.43	6.43	7.19

(BR) Denotes Brakemotor

SK 1SMI50 A (Hollow Shaft Detail)

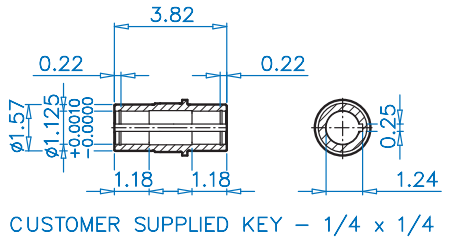

Send Quote Requests to info@automatedpt.com
Call +1(800)985-6929 To Order or Order Online At Nordgearmotors.com

DRIVESYSTEMS

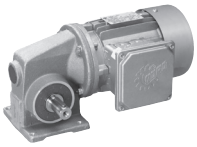

SK 1SMI50

SK 1SMI50 VX + IEC + Motor

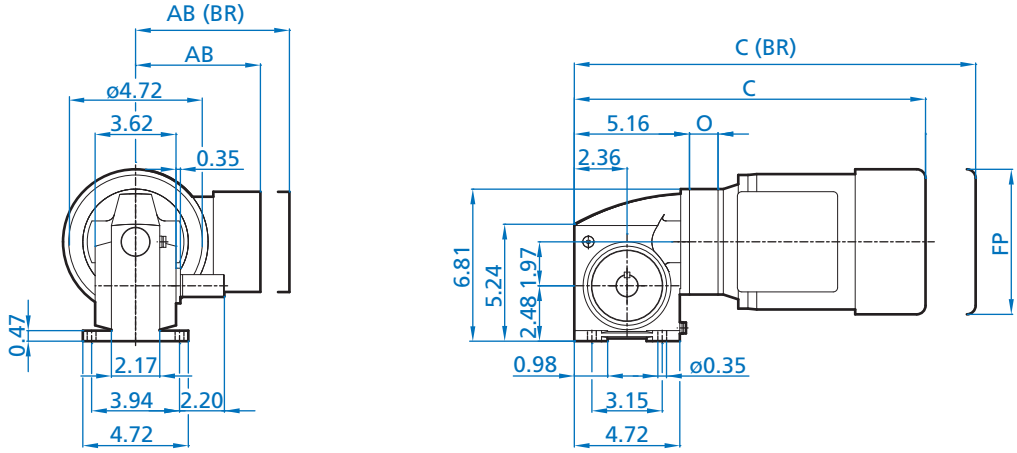

Motor Dimensions

Standard efficiency	63S/L	71S/L	80S/L	90S/L
Energy efficiency			80SH/LH	90SH/LH
Premium efficiency			80LP	90SP/LP
AB	4.51	4.86	5.59	5.79
AB (BR)	4.84	5.24	5.59	5.79
C	14.02	14.88	15.74	17.79
C (BR)	16.23	17.16	18.26	20.74
O	1.28	1.28	1.28	1.79
FP	5.09	5.72	6.43	7.19

(BR) Denotes Brakemotor

SK 1SMI50 V (Solid Shaft Detail)

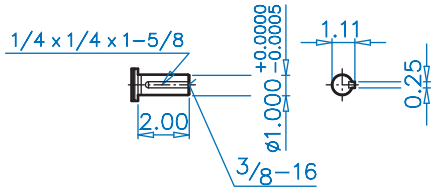

SK 1SMI50 AX + IEC + Motor

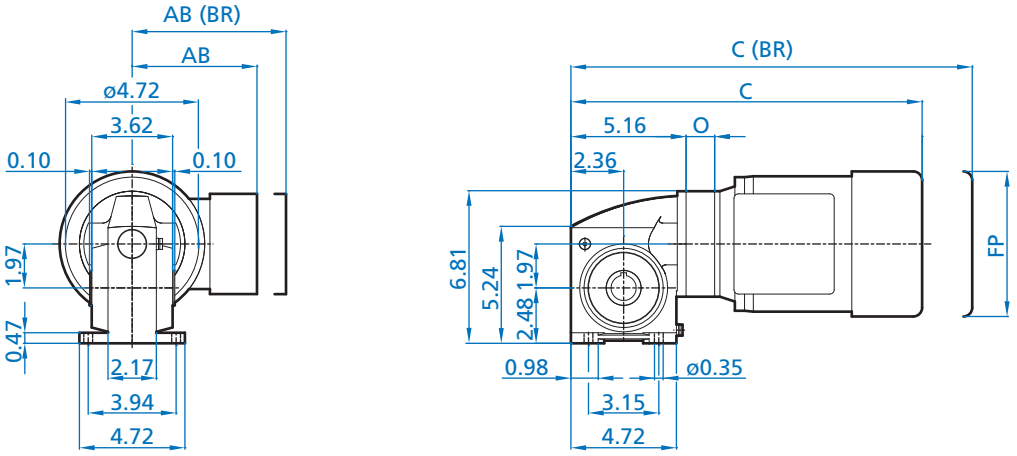

Motor Dimensions

Standard efficiency	63S/L	71S/L	80S/L	90S/L
Energy efficiency			80SH/LH	90SH/LH
Premium efficiency			80LP	90SP/LP
AB	4.51	4.86	5.59	5.79
AB (BR)	4.84	5.24	5.59	5.79
C	14.02	14.88	15.74	17.79
C (BR)	16.23	17.16	18.26	20.74
O	1.28	1.28	1.28	1.79
FP	5.09	5.72	6.43	7.19

(BR) Denotes Brakemotor

SK 1SMI50 A (Hollow Shaft Detail)

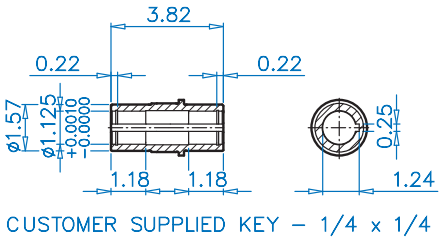

ALTERNATE SHAFTS SEE PAGES 207 - 211

Send Quote Requests to info@automatedpt.com
Call +1(800)985-6929 To Order or Order Online At Nordgearmotors.com

SK 1SMI 63

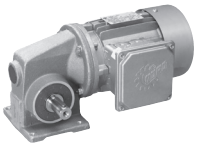

DRIVESYSTEMS

SK 1SMID63 VX + Motor

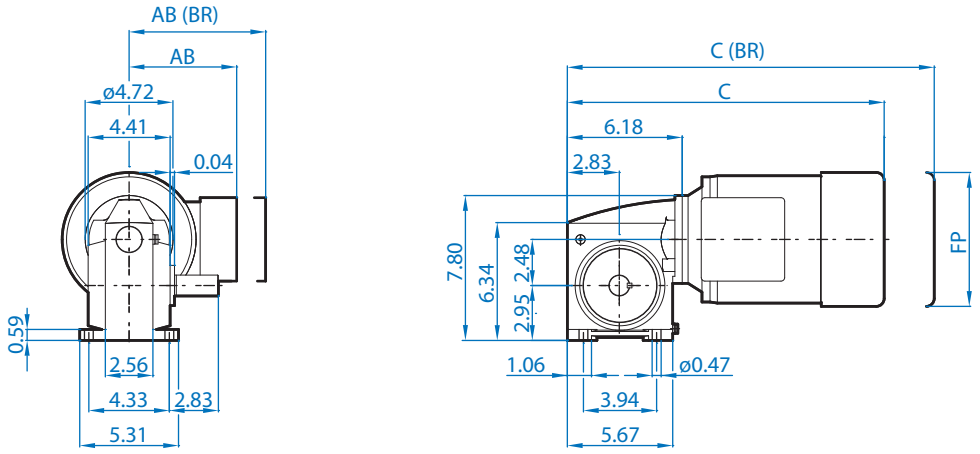

Motor Dimensions

Standard efficiency	80S/L	90S/L
Energy efficiency	80LH	90SH/LH
Premium efficiency	80LP	90SP/LP
AB	5.59	5.79
AB (BR)	5.59	5.79
C	15.49	17.02
C (BR)	18.01	19.98
FP	6.43	7.19

(BR) Denotes Brakemotor

SK 1SI63 V (Solid Shaft Detail)

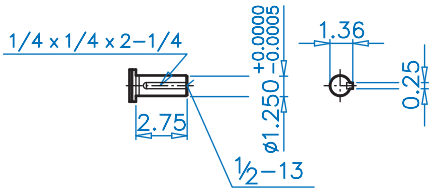

ALTERNATE SHAFTS SEE PAGES 207 - 211

SK 1SMI63 VX + NEMA

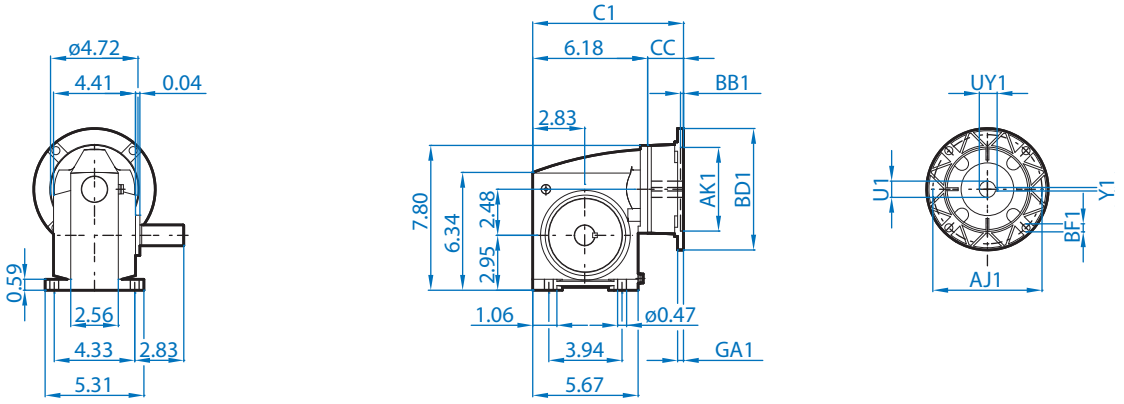

NEMA Dimensions

Type	AJ1	AK1	BB1	BD1	BF1	GA1	U1	UY1	Y1	C1	CC
56C	5.875	4.50	0.18	6.54	0.43	0.47	0.625	0.71	0.188	7.64	1.46
140TC	5.875	4.50	0.18	6.54	0.43	0.47	0.875	0.96	0.188	8.11	1.93
180TC	7.250	8.50	0.23	9.17	0.59	0.71	1.125	1.24	0.250	8.34	2.16

Send Quote Requests to info@automatedpt.com
Call +1(800)985-6929 To Order or Order Online At Nordgearmotors.com

DRIVESYSTEMS

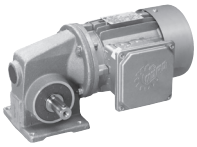

SK 1SMI63 VZ/VF & Solid Shaft Options

SK 1SMI63 VZ

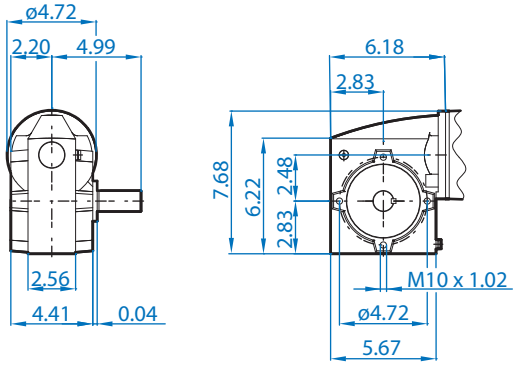

SK 1SMI63 VF - F/I

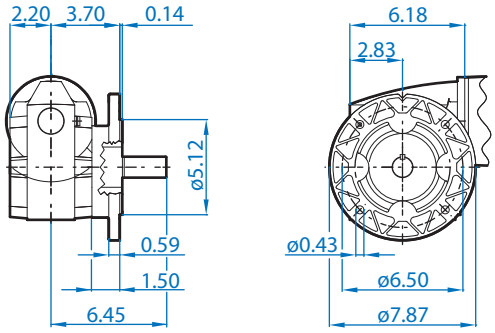

SK 1SMI63 VF - F/II

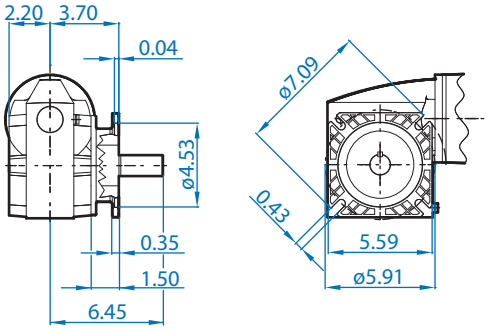

SK 1SMI63 VF - F/IV

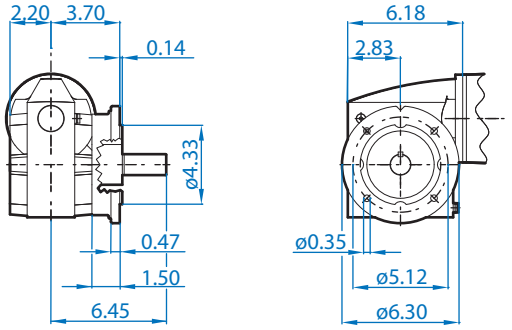

SK 1SMI63 VZH - Plug-In Shaft + Shaft Cover

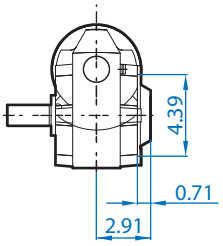

SK 1SMI63 LX - Double Solid Shaft

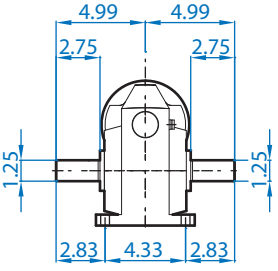

ALTERNATE SHAFTS SEE PAGES 207 - 211

Send Quote Requests to info@automatedpt.com
Call +1(800)985-6929 To Order or Order Online At Nordgearmotors.com

SK 1SMI63 AX

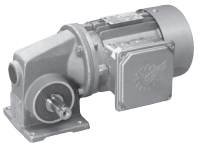

NORD DRIVESYSTEMS

SK 1SMID63 AX + Integral Motor

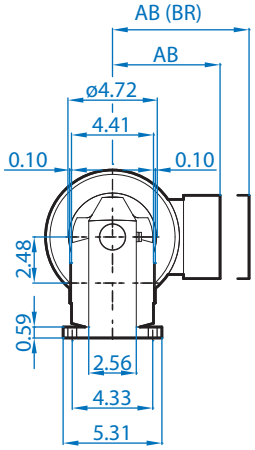

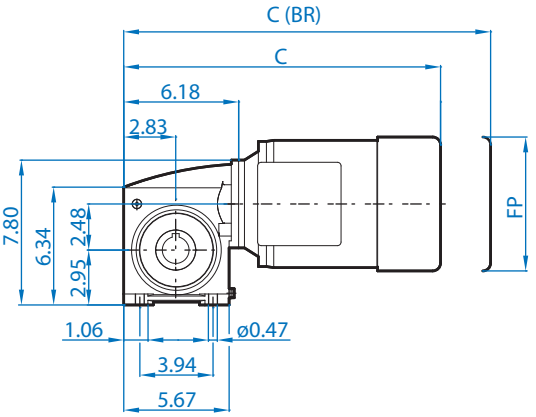

Motor Dimensions

Standard efficiency	80S/L	90S/L
Energy efficiency	80LH	90SH/LH
Premium efficiency	80LP	90SP/LP
AB	5.59	5.79
AB (BR)	5.59	5.79
C	15.49	17.02
C (BR)	18.01	19.98
FP	6.43	7.19

(BR) Denotes Brakemotor

SK 1SMI 63 A (Hollow Shaft Detail)

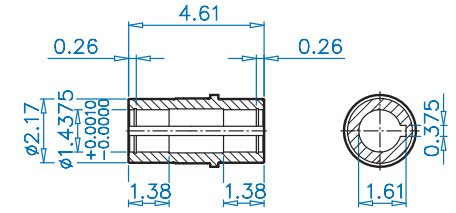

CUSTOMER SUPPLIED KEY – 3/8 x 3/8

SK 1SMI63 AX + NEMA

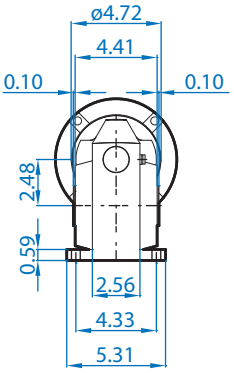

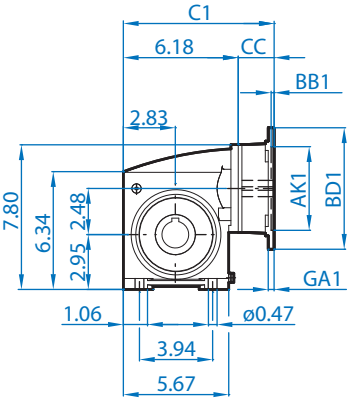

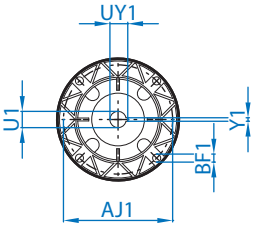

NEMA Dimensions

Type	AJ1	AK1	BB1	BD1	BF1	GA1	U1	UY1	Y1	C1	CC
56C	5.875	4.50	0.18	6.54	0.43	0.47	0.625	0.71	0.188	7.64	1.46
140TC	5.875	4.50	0.18	6.54	0.43	0.47	0.875	0.96	0.188	8.11	1.93
180TC	7.250	8.50	0.23	9.17	0.59	0.71	1.125	1.24	0.250	8.34	2.16

DIMENSIONS
Dimensions in Inches
ALTERNATE SHAFTS SEE PAGES 207 - 211

Send Quote Requests to info@automatedpt.com
Call +1(800)985-6929 To Order or Order Online At Nordgearmotors.com

NORD DRIVESYSTEMS

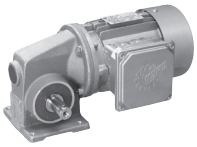

SK 1SMI 63 AZ/AF & Hollow Shaft Options

SK 1SMI63 AZ

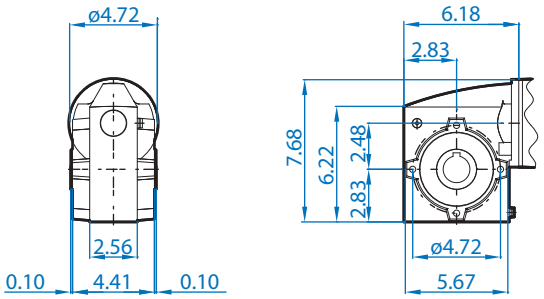

SK 1SMI63 AF - F/I

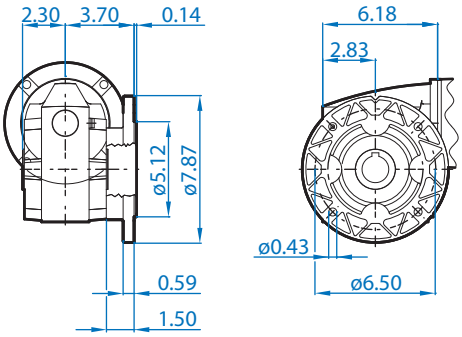

SK 1SMI63 AF - F/II

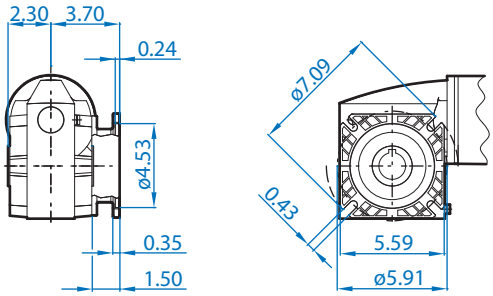

SK 1SMI63 AF - F/IV

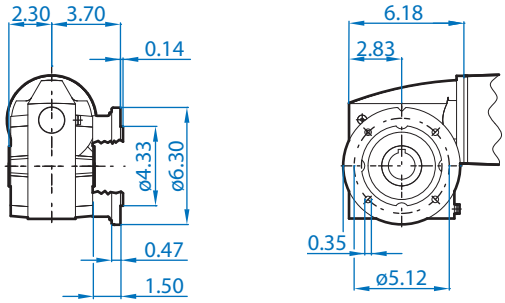

SK 1SMI63 AZD - Torque Arm

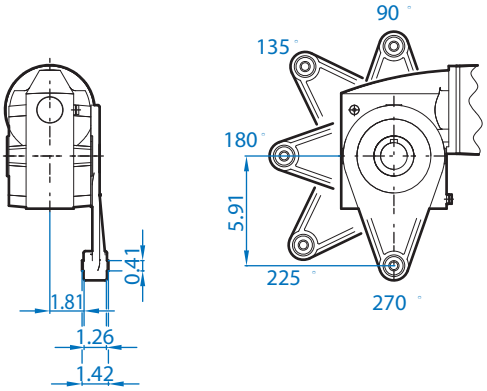

SK 1SMI63 AZH - Hollow Shaft + Shaft Cover

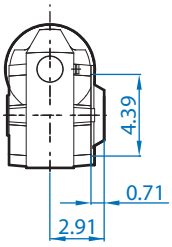

SK 1SMI63 J (1.00" Bushing Kit)

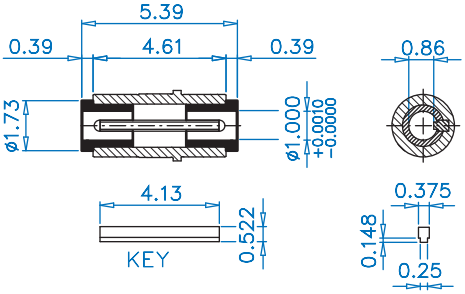

SK 1SMI63 J (1.250" Bushing Kit)

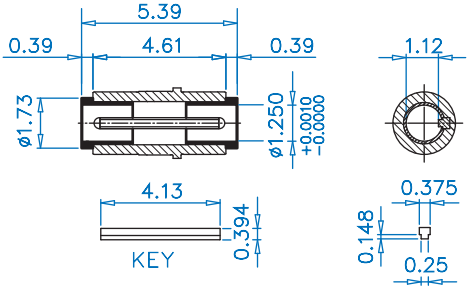

DIMENSIONS
Dimensions in Inches

ALTERNATE SHAFTS SEE PAGES 207 - 211

Send Quote Requests to info@automatedpt.com
Call +1(800)985-6929 To Order or Order Online At Nordgearmotors.com

SK 1SMI63

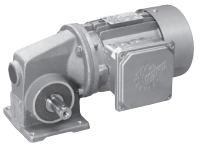

NORD DRIVESYSTEMS

SK 1SMI63 VX + NEMA + Motor

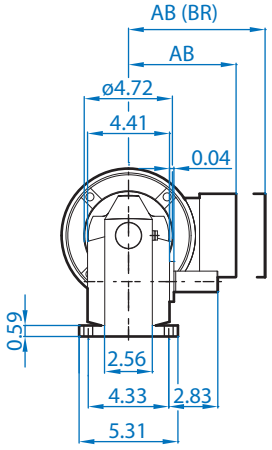

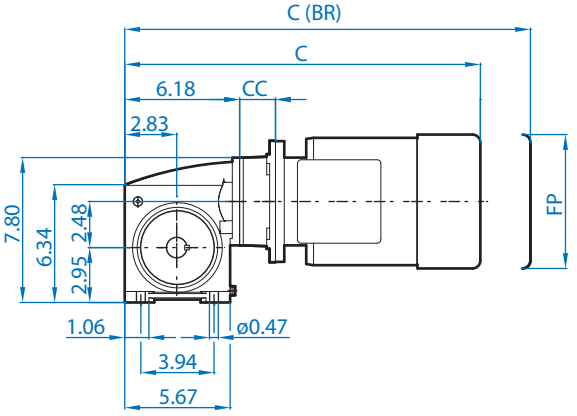

Motor Dimensions

Standard eff.	56C-63S/L	56C-71S/L	56C-80S/L	140TC-80L	140TC-90S/L	180TC-100L
Energy eff.			56C-80LH	140TC-80LH	140TC-90SH/LH	180TC-100LH
Premium eff.			56C-80LP	140TC-80LP	140TC-90SP/LP	180TC-100LP
AB	4.51	4.86	5.59	5.59	5.79	6.65
AB (BR)	4.84	5.24	5.59	5.59	5.79	6.77
C	15.22	16.08	16.94	17.42	18.95	20.17
C (BR)	17.43	18.36	19.46	19.94	21.91	23.78
CC	1.46	1.46	1.46	1.93	1.93	1.93
FP	5.09	5.72	6.43	6.43	7.19	7.90

(BR) Denotes Brakemotor

SK 1SMI63 V (Solid Shaft Detail)

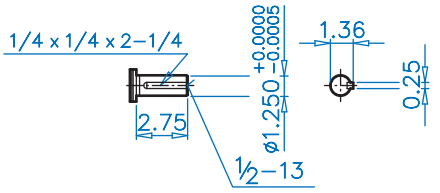

SK 1SMI63 AX + NEMA + Motor

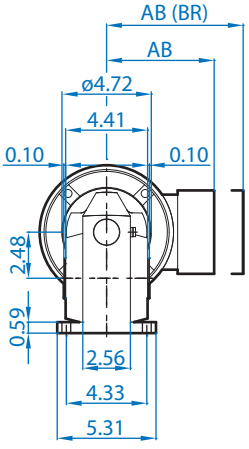

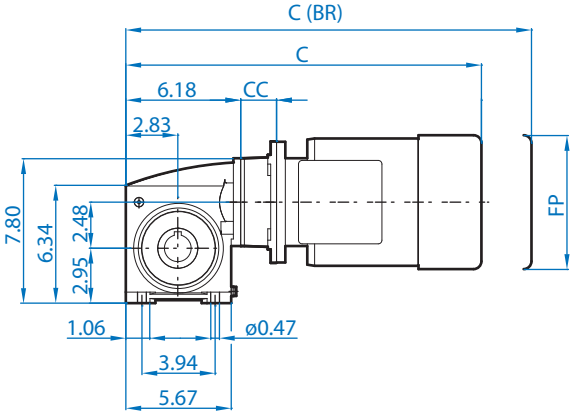

Motor Dimensions

Standard eff.	56C-63S/L	56C-71S/L	56C-80S/L	140TC-80L	140TC-90S/L	180TC-100L
Energy eff.			56C-80LH	140TC-80LH	140TC-90SH/LH	180TC-100LH
Premium eff.			56C-80LP	140TC-80LP	140TC-90SP/LP	180TC-100LP
AB	4.51	4.86	5.59	5.59	5.79	6.65
AB (BR)	4.84	5.24	5.59	5.59	5.79	6.77
C	15.22	16.08	16.94	17.42	18.95	20.17
C (BR)	17.43	18.36	19.46	19.94	21.91	23.78
CC	1.46	1.46	1.46	1.93	1.93	1.93
FP	5.09	5.72	6.43	6.43	7.19	7.90

(BR) Denotes Brakemotor

SK 1SMI63 A (Hollow Shaft Detail)

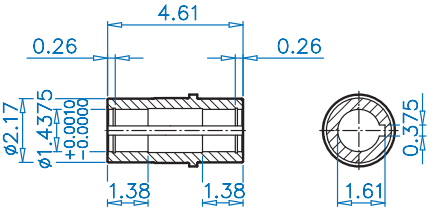

CUSTOMER SUPPLIED KEY – 3/8 x 3/8

ALTERNATE SHAFTS SEE PAGES 207 - 211

Send Quote Requests to info@automatedpt.com
Call +1(800)985-6929 To Order or Order Online At Nordgearmotors.com

DRIVESYSTEMS

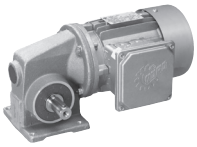

SK 1SMI63

SK 1SMI63 VX + IEC + Motor

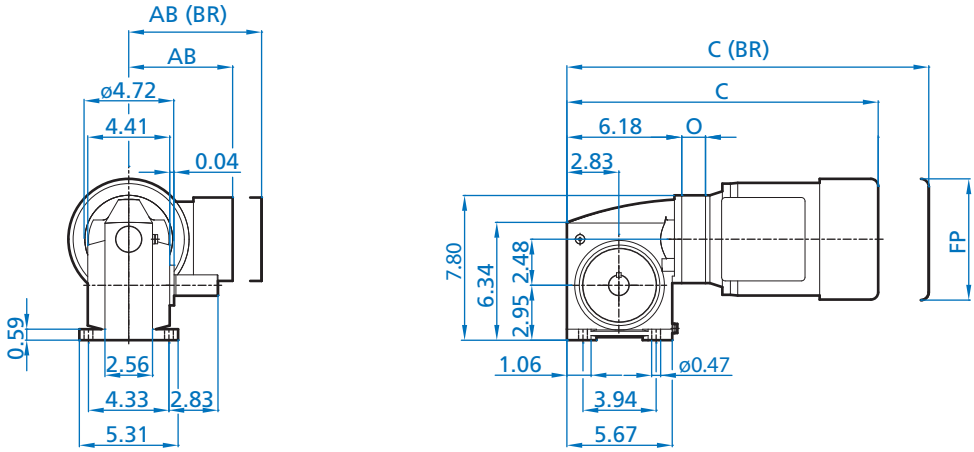

Motor Dimensions

Standard efficiency	63S/L	71S/L	80S/L	90S/L
Energy efficiency			80SH/LH	90SH/LH
Premium efficiency			80LP	90SP/LP
AB	4.51	4.86	5.59	5.79
AB (BR)	4.84	5.24	5.59	5.79
C	15.05	15.90	16.77	18.81
C (BR)	17.25	18.19	19.29	21.77
O	1.28	1.28	1.28	1.28
FP	5.09	5.72	6.43	7.19

(BR) Denotes Brakemotor

SK 1SMI63 V (Solid Shaft Detail)

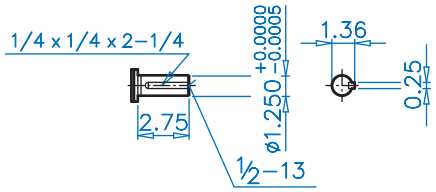

SK 1SMI63 AX + IEC + Motor

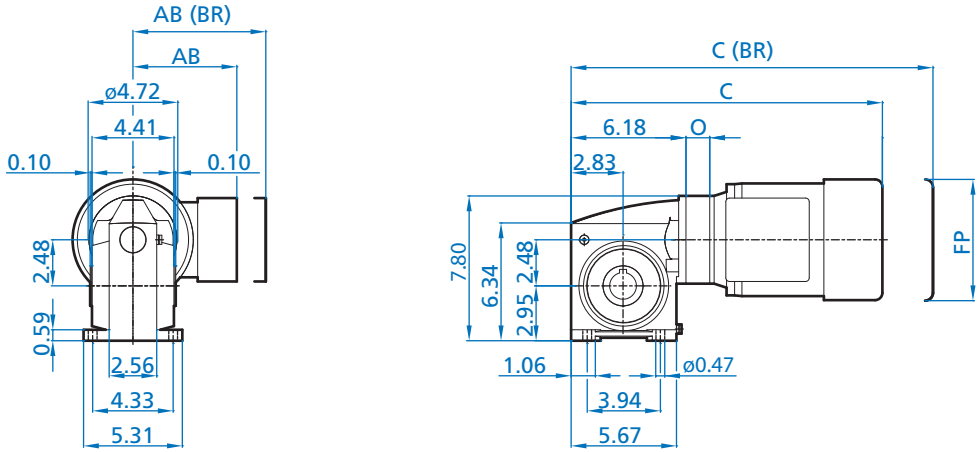

Motor Dimensions

Standard efficiency	63S/L	71S/L	80S/L	90S/L
Energy efficiency			80SH/LH	90SH/LH
Premium efficiency			80LP	90SP/LP
AB	4.51	4.86	5.59	5.79
AB (BR)	4.84	5.24	5.59	5.79
C	15.05	15.90	16.77	18.81
C (BR)	17.25	18.19	19.29	21.77
O	1.28	1.28	1.28	1.28
FP	5.09	5.72	6.43	7.19

(BR) Denotes Brakemotor

SK 1SMI63 A (Hollow Shaft Detail)

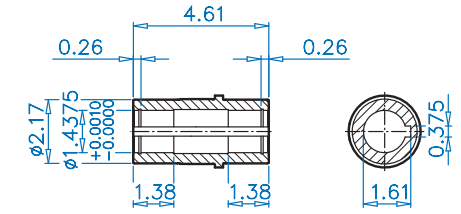

CUSTOMER SUPPLIED KEY – 3/8 x 3/8

Dimensions in Inches
DIMENSIONS
ALTERNATE SHAFTS SEE PAGES 207 - 211

Send Quote Requests to info@automatedpt.com
Call +1(800)985-6929 To Order or Order Online At Nordgearmotors.com

SK 1SMI 75

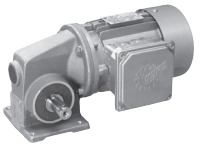

NORD DRIVESYSTEMS

SK 1SMI75 VX + NEMA + Motor

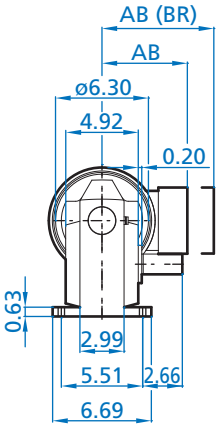

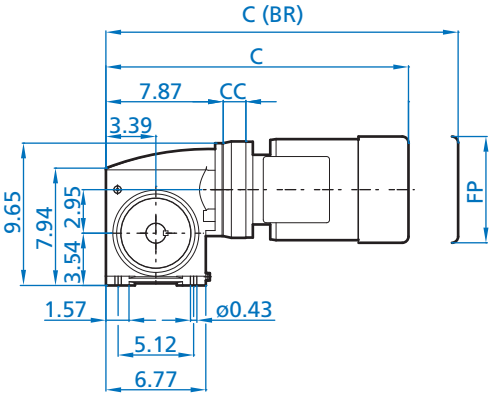

Motor Dimensions

Standard eff.	56C-71S/L	56C-80S/L	140TC-80L	140TC-90S/L	180TC-100L	180TC-112M
Energy eff.		56C-80LH	140TC-80LH	140TC-90SH/LH	180TC-100LH	180TC-112MH
Premium eff.		56C-80LP	140TC-80LP	140TC-90SP/LP	180TC-100LP	180TC-112MP
AB	4.86	5.59	5.59	5.79	6.65	7.05
AB (BR)	5.24	5.59	5.59	5.79	6.77	7.05
C	17.93	18.80	19.11	20.65	22.09	22.85
C (BR)	20.21	21.31	21.63	23.60	25.70	26.55
CC	1.61	1.61	1.93	1.93	25.70	25.70
FP	5.72	6.43	6.43	7.19	7.90	8.87

(BR) Denotes Brakemotor

SK 1SMI 75 V (Solid Shaft Detail)

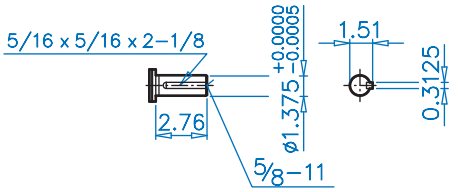

SK 1SMI75 VX + NEMA

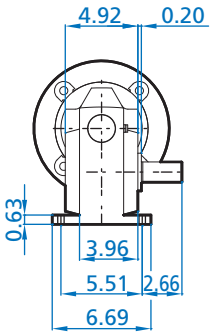

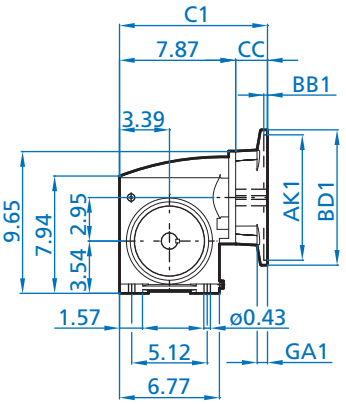

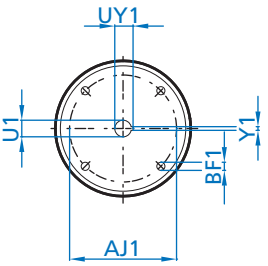

NEMA Dimensions

Type	AJ1	AK1	BB1	BD1	BF1	GA1	U1	UY1	Y1	C1	CC
56C	5.875	4.50	0.18	6.54	0.43	0.47	0.625	0.71	0.188	9.49	1.61
140TC	5.875	4.50	0.18	6.54	0.43	0.47	0.875	0.96	0.188	9.80	1.93
180TC	7.250	8.50	0.23	9.17	0.59	0.71	1.125	1.24	0.250	10.03	2.16

Send Quote Requests to info@automatedpt.com
Call +1(800)985-6929 To Order or Order Online At Nordgearmotors.com

DRIVESYSTEMS

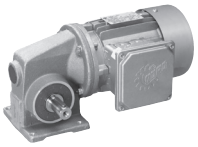

SK 1SMI 75 VZ/VF & Solid Shaft Options

SK 1SMI75 VZ

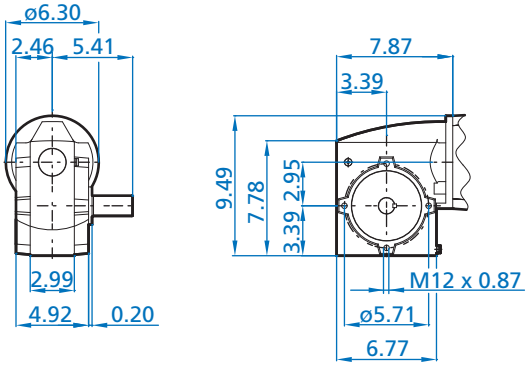

SK 1SMI75 VF - F/II

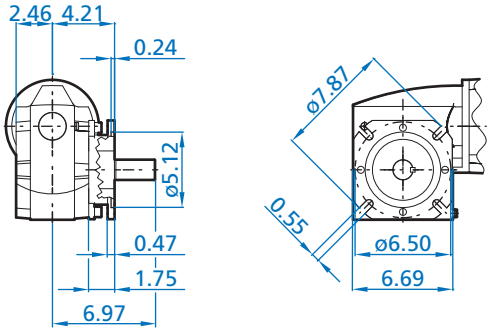

Dimensions in Inches
DIMENSIONS

SK 1SMI75 VZH - Solid Shaft + Cover

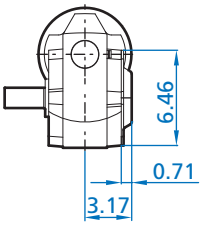

SK 1SMI75 LX - Double Solid Shaft

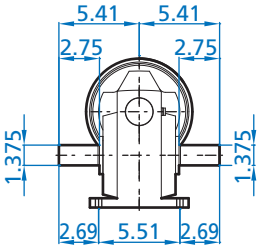

ALTERNATE SHAFTS SEE PAGES 207 - 211

Send Quote Requests to info@automatedpt.com
Call +1(800)985-6929 To Order or Order Online At Nordgearmotors.com

SK 1SMI 75 AX

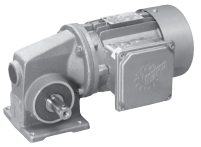

NORD DRIVESYSTEMS

SK 1SMI 75 AX + NEMA + Motor

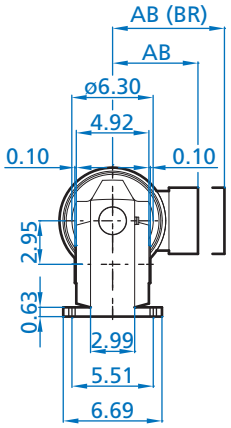

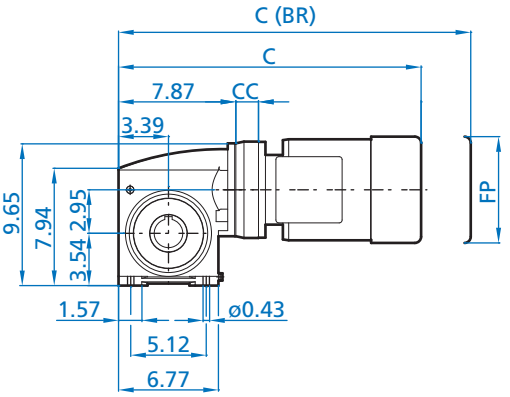

Motor Dimensions

Standard eff.	56C-71S/L	56C-80S/L	140TC-80L	140TC-90S/L	180TC-100L	180TC-112M
Energy eff.		56C-80LH	140TC-80LH	140TC-90SH/LH	180TC-100LH	180TC-112MH
Premium eff.		56C-80LP	140TC-80LP	140TC-90SP/LP	180TC-100LP	180TC-112MP
AB	4.86	5.59	5.59	5.79	6.65	7.05
AB (BR)	5.24	5.59	5.59	5.79	6.77	7.05
C	17.93	18.80	19.11	20.65	22.09	22.85
C (BR)	20.21	21.31	21.63	23.60	25.70	26.55
CC	1.61	1.61	1.93	1.93	25.70	25.70
FP	5.72	6.43	6.43	7.19	7.90	8.87

(BR) Denotes Brakemotor

SK 1SMI 75 A (Hollow Shaft Detail)

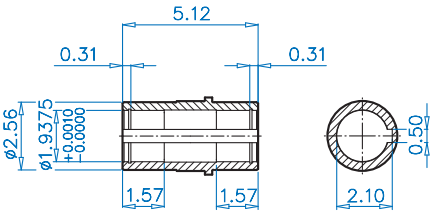

CUSTOMER SUPPLIED KEY 1/2 x 3/8

SK 1SMI 75 AX + NEMA

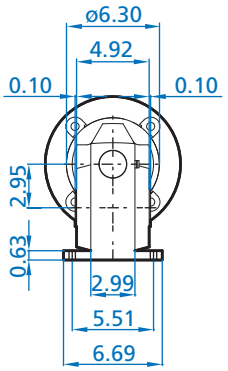

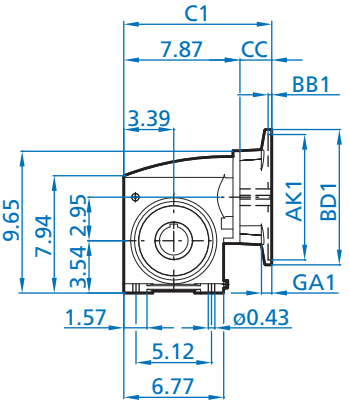

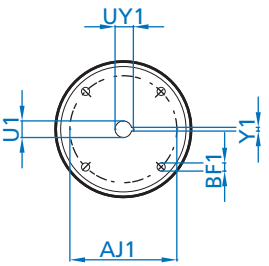

NEMA Dimensions

Type	AJ1	AK1	BB1	BD1	BF1	GA1	U1	UY1	Y1	C1	CC
56C	5.875	4.50	0.18	6.54	0.43	0.47	0.625	0.71	0.188	9.49	1.61
140TC	5.875	4.50	0.18	6.54	0.43	0.47	0.875	0.96	0.188	9.80	1.93
180TC	7.250	8.50	0.23	9.17	0.59	0.71	1.125	1.24	0.250	10.03	2.16

Send Quote Requests to info@automatedpt.com
Call +1(800)985-6929 To Order or Order Online At Nordgearmotors.com

DRIVESYSTEMS

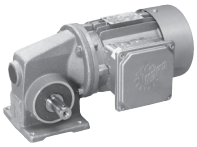

SK 1SMI 75 AZ/AF & Hollow Shaft Options

SK 1SMI 75 AZ

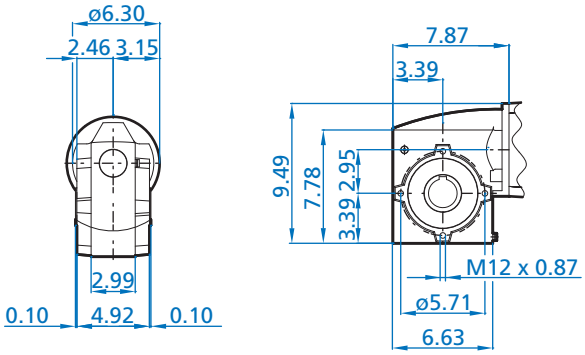

SK 1SMI 75 AF - F/II

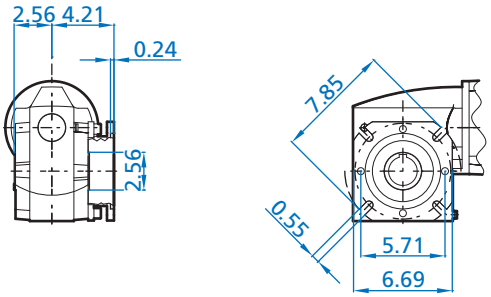

SK 1SMI 75 AZD - Torque Arm

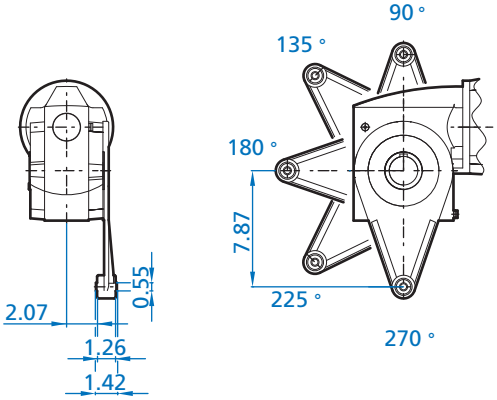

SK 1SMI 75 AZH - Hollow Shaft + Cover

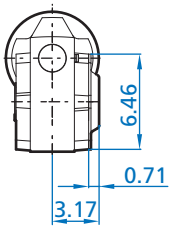

SK 1SMI75 J (1.25" Bushing Kit)

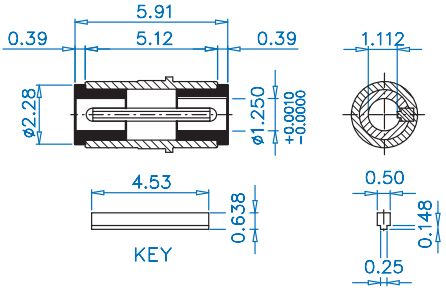

SK 1SMI75 J (1.4375" Bushing Kit)

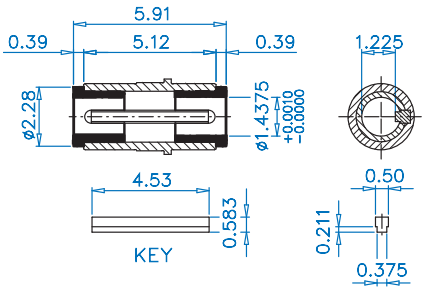

SK 1SMI75 J (1.50" Bushing Kit)

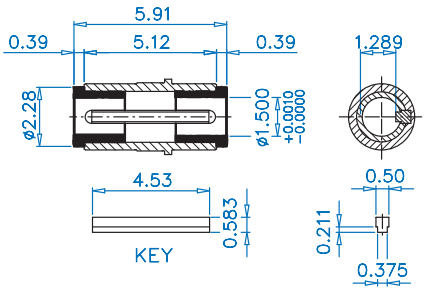

Dimensions in Inches
DIMENSIONS
ALTERNATE SHAFTS SEE PAGES 207 - 211

Send Quote Requests to info@automatedpt.com
Call +1(800)985-6929 To Order or Order Online At Nordgearmotors.com

SK 1SMI75

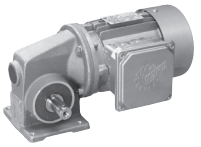

NORD DRIVESYSTEMS

SK 1SMI75 VX + IEC + Motor

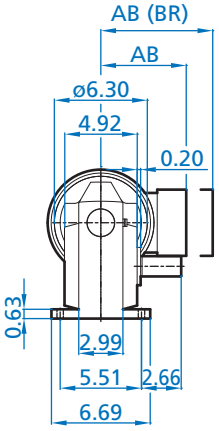

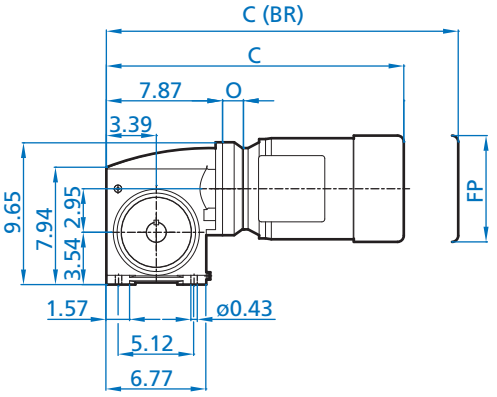

Motor Dimensions

Standard eff.	71S/L	80S/L	90S/L	100L	112M
Energy eff.		80SH/LH	90SH/LH	100LH	112MH
Premium eff.		80LP	90SP/LP	100LP	112MP
AB	4.86	5.59	5.79	6.65	7.05
AB (BR)	5.24	5.59	5.79	6.77	7.05
C	17.73	18.60	20.13	21.35	22.11
C (BR)	20.02	21.12	23.09	24.96	25.81
O	1.42	1.42	1.42	1.42	1.42
FP	5.72	6.43	7.19	7.90	8.87

(BR) Denotes Brakemotor

SK 1SMI 75 V (Solid Shaft Detail)

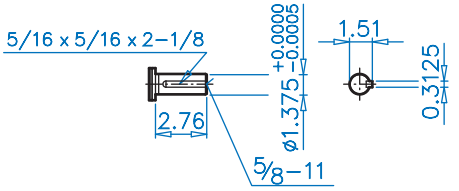

SK 1SMI75 AX + IEC + Motor

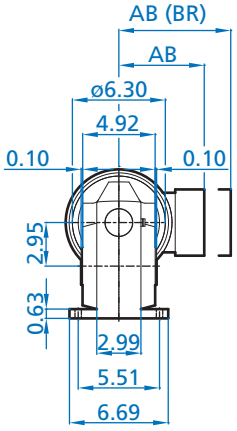

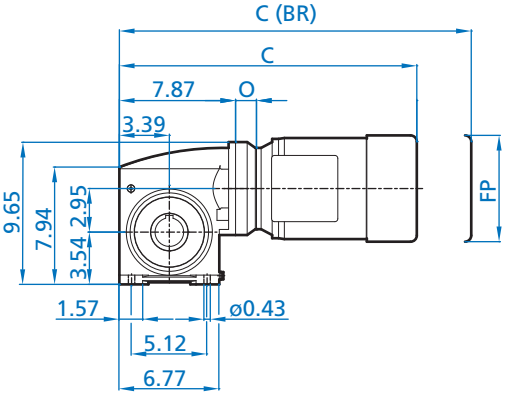

Motor Dimensions

Standard eff.	71S/L	80S/L	90S/L	100L	112M
Energy eff.		80SH/LH	90SH/LH	100LH	112MH
Premium eff.		80LP	90SP/LP	100LP	112MP
AB	4.86	5.59	5.79	6.65	7.05
AB (BR)	5.24	5.59	5.79	6.77	7.05
C	17.73	18.60	20.13	21.35	22.11
C (BR)	20.02	21.12	23.09	24.96	25.81
O	1.42	1.42	1.42	1.42	1.42
FP	5.72	6.43	7.19	7.90	8.87

(BR) Denotes Brakemotor

SK 1SMI 75 A (Hollow Shaft Detail)

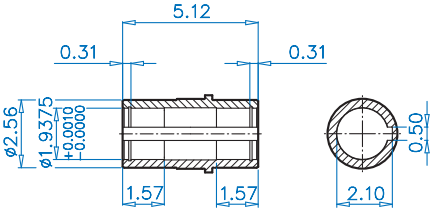

CUSTOMER SUPPLIED KEY 1/2 x 3/8

DIMENSIONS
Dimensions in Inches
ALTERNATE SHAFTS SEE PAGES 207 - 211

Send Quote Requests to info@automatedpt.com
Call +1(800)985-6929 To Order or Order Online At Nordgearmotors.com

DRIVESYSTEMS

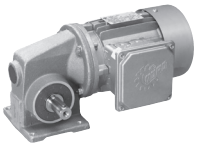

Solid Input Shaft - W
SK 1SMI40 - SK 1SMI75

Solid Input Shaft Module INCH

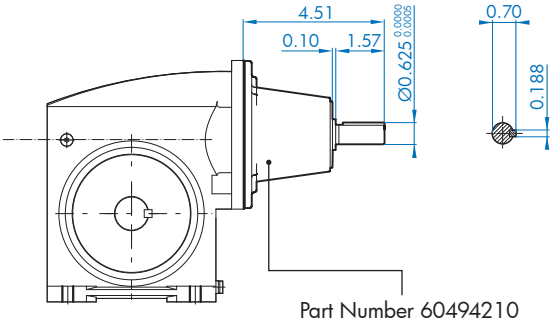

SK1SMI40-SK1SI63

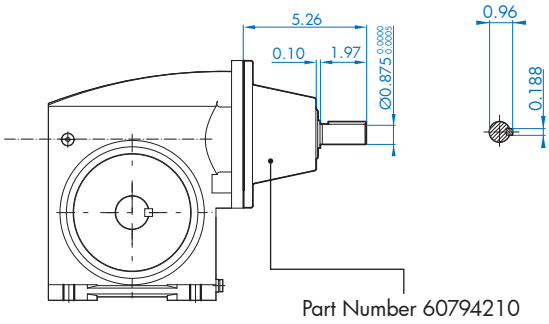

SK1SMI75

Solid Input Shaft Module METRIC

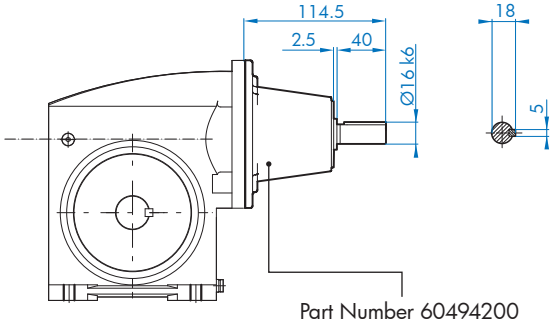

SK1SMI40-SK1SMI63

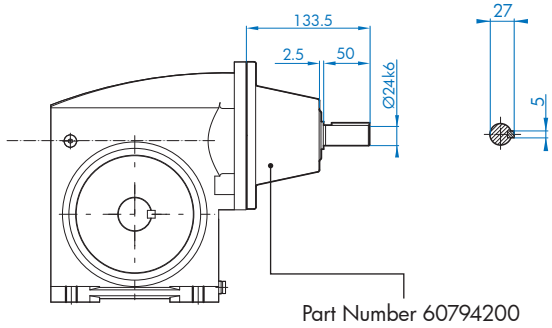

SK1SMI75

Send Quote Requests to info@automatedpt.com
Call +1(800)985-6929 To Order or Order Online At Nordgearmotors.com

Helical Input Stage H10
SK 1SMI40 - SK 1SMI63 (NEMA)

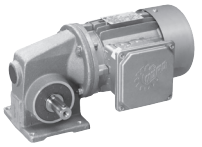

DRIVESYSTEMS

Helical Input Stage (H10)

The helical input stage has a ratio of 10:1. This input stage can be attached to the wormgear modules SK1SMI40, SK1SMI50, and SK1SMI63. Using the module helical input enables the building of 2-stage helical-worm drives.

Helical-worm gearmotor

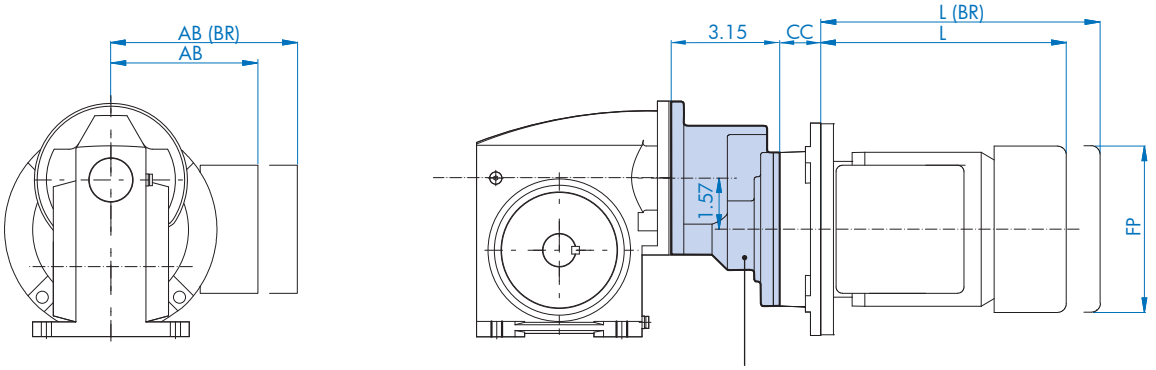

Std. eff.	/H10-56C - 63 S/L	/H10-56C - 71S/L	/H10-56C - 80 S/L	/H10-140TC - 80 L	/H10-140TC - 90 S/L
Energy eff.			/H10-56C - 80 LH	/H10-140TC - 80 LH	/H10-140TC - 90 SH/LH
Prem. eff.			/H10-56C - 80 LP	/H10-140TC - 80 LP	/H10-140TC - 90 SP/LP
AB	4.53	4.88	5.59	5.59	5.79
AB (BR)	4.84	5.24	5.63	5.63	5.83
CC	1.46	1.46	1.46	1.93	1.93
FP	5.12	5.71	6.50	6.50	7.20
L	7.56	8.43	9.45	9.45	11.02
L (BR)	9.76	10.71	11.97	11.97	13.98

Helical-worm speed reducer with NEMA C-face motor adapter

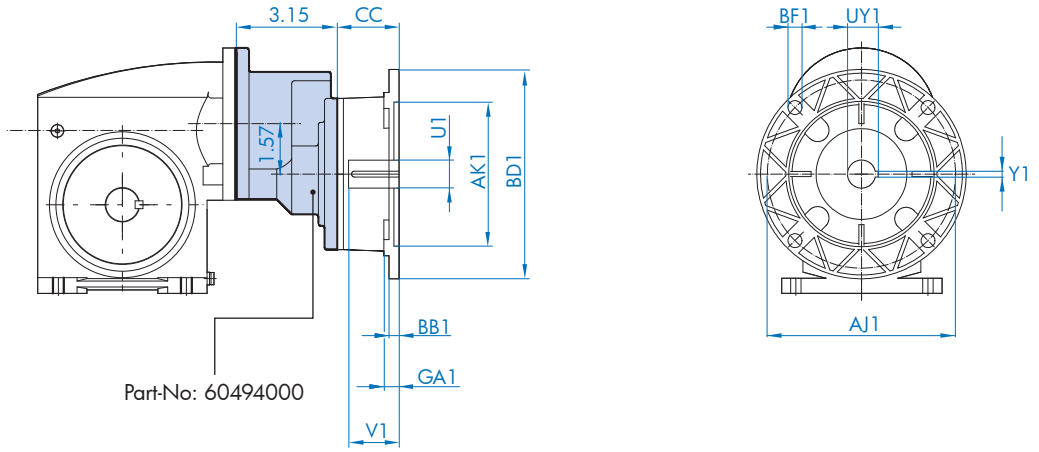

	AJ1	AK1	BB1	BD1	BF1	CC	GA1	U1	UY1	V1	Y1	Part-No
NEMA 56C	5.875	4.50	0.16	6.54	0.43	1.46	0.50	0.625	0.71	2.06	0.1875	60495500
NEMA 140TC	5.875	4.50	0.16	6.54	0.43	1.93	0.50	0.875	0.96	2.12	0.1875	60595500

Send Quote Requests to info@automatedpt.com
Call +1(800)985-6929 To Order or Order Online At Nordgearmotors.com

NORD DRIVESYSTEMS

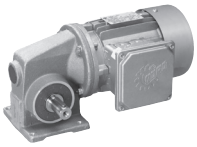

Helical Input Stage H10
SK 1SMI40 - SK 1SMI63 (IEC)

Helical Input Stage (H10)

The helical input stage has a ratio of 10:1. This input stage can be attached to the wormgear modules SK1SI40, SK1SI50, and SK1SI63. Using the module helical input enables the building of 2-stage helical-worm drives.

Helical-worm gearmotor

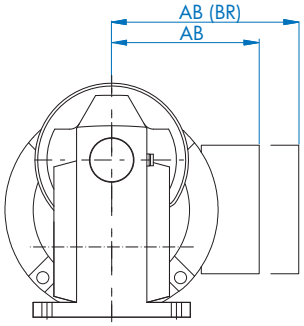

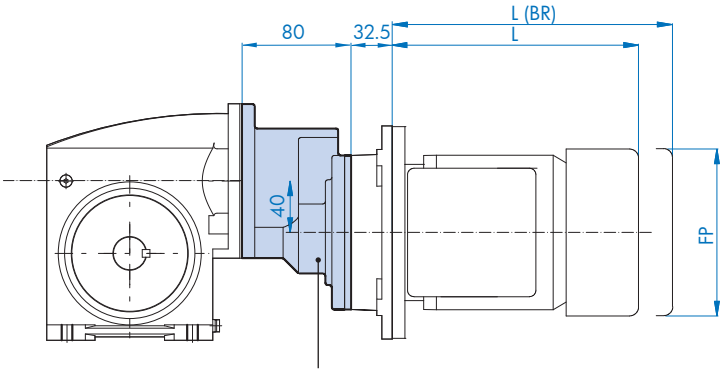

Part-No: 60494000

	/H10-63 S/L	/H10-71 S/L
AB	115	124
AB (BR)	123	133
L	192	214
L (BR)	248	272
FP	130	145

Helical - worm gearbox with IEC motor adapter

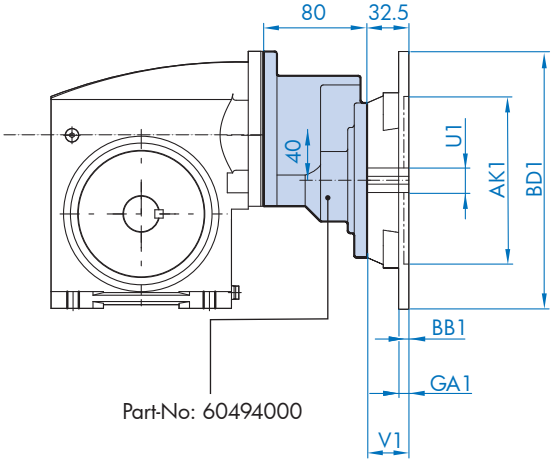

Part-No: 60494000

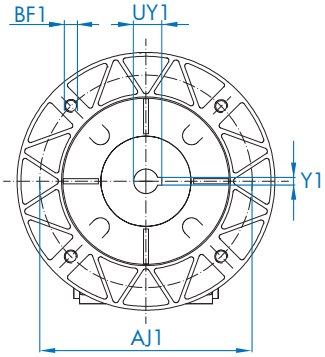

	IEC 56 B14 C105	IEC 56 B5 A120	IEC 63 B14 C90	IEC 63 B14 C120	IEC 63 B5 A140	IEC 71 B14 C105	IEC 71 B14 C140	IEC 71 B5 A160	IEC 80 B14 C120	IEC 80 B14 C160	IEC 80 B5 A200
AJ1	85	100	75	100	115	85	115	130	100	130	165
AK1	70	80	60	80	95	70	95	110	80	110	130
BB1	3	3.5	3	3.5	3.5	3	3.5	4	3.5	4	4
BD1	105	120	90	120	140	105	140	160	120	160	200
BF1	7	7	6	7	9	7	9	9	7	9	M10
GA1	8	8	8	8	8	8	8	8	8	8	20
U1	9	9	11	11	11	14	14	14	19	19	19
UY1	11.4	11.4	12.8	12.8	12.8	16.3	16.3	16.3	21.8	21.8	21.8
V1	20	20	23	23	23	30	30	30	40	40	40
Y1	3	3	4	4	4	5	5	5	6	6	6

Send Quote Requests to info@automatedpt.com
Call +1(800)985-6929 To Order or Order Online At Nordgearmotors.com

Double Worm
SK 1SMI40 - SK 1SMI75 NEMA

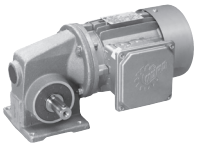

NORD DRIVESYSTEMS

Double Wormgear

The double wormgear is an adapter that enables the fitting of two MINICASE® worm modules together.

Double-worm gearmotor

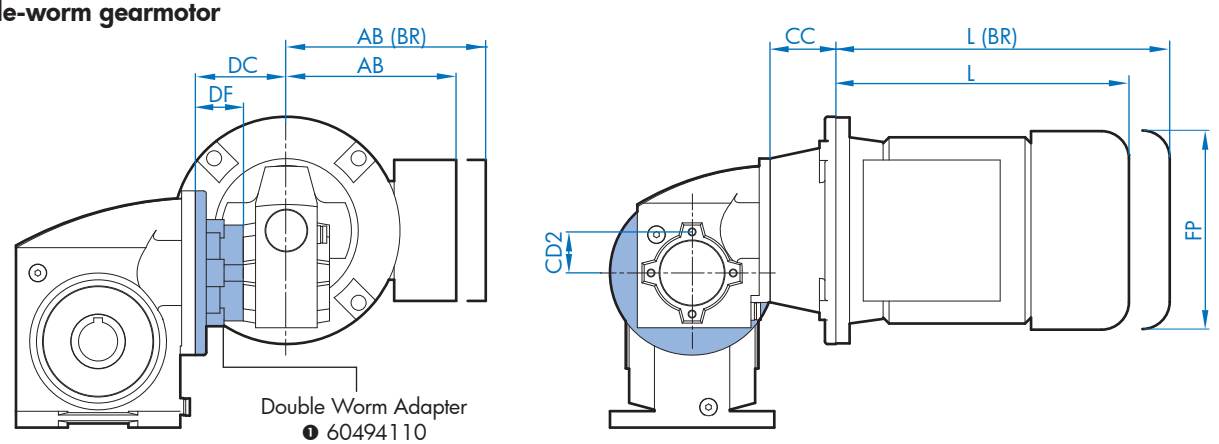

Double Worm Adapter
❶ 60494110
❷ 60794110

	❶ SK 1SMI40/31, SK 1SMI50/31, or SK 1SMI63/31			❷ SK 1SMI75/40				
Standard eff.	-56C-63 S/L	-56C-71 S/L	-56C-80 S/L	-56C-63 S/L	-56C-71 S/L	-56C-80 S/L	-140TC-80 L	-140TC-90 S/L
Energy eff.			-56C-80LH			-56C-80LH	-140TC-80LH	-140TC-90SH/LH
Premium eff.			-56C-80LP			-56C-80LP	-140TC-80LP	-140TC-90SP/LP
AB	4.53	4.88	5.59	4.53	4.88	5.59	5.59	5.79
AB (BR)	4.84	5.24	5.63	4.84	5.24	5.63	5.63	5.83
CC	1.89	1.89	1.89	1.46	1.46	1.46	1.93	1.93
CD2	1.18	1.18	1.18	1.57	1.57	1.57	1.57	1.57
DC	2.62	2.62	2.62	3.05	3.05	3.05	3.05	3.05
DF	1.38	1.38	1.38	1.52	1.52	1.52	1.52	1.52
FP	5.12	5.71	6.50	5.12	5.71	6.50	6.50	7.20
L	7.56	8.43	9.45	7.56	8.43	9.45	9.45	11.02
L (BR)	9.76	10.71	11.97	9.76	10.71	11.97	11.97	13.98

Double-worm speed reducer with NEMA C-face motor adapter

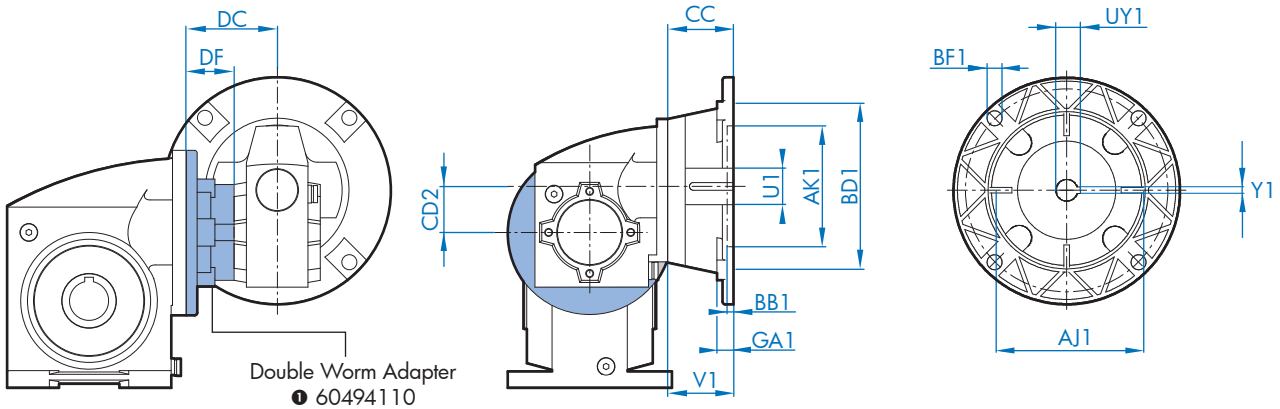

Double Worm Adapter
❶ 60494110
❷ 60794110

SK ... /31	AJ1	AK1	BB1	BD1	BF1	CC	CD2	DC	DF	GA1	U1	UY1	V1	Y1	Part-No
NEMA 48C	3.75	3.00	0.16	4.33	0.29	1.50	1.18	2.62	1.38	0.25	0.500	flat	1.69	flat	60395500
NEMA 56C	5.875	4.50	0.16	6.54	0.43	1.89	1.18	2.62	1.38	0.50	0.625	0.71	2.06	0.1875	60395510

SK 1SI75/40	AJ1	AK1	BB1	BD1	BF1	CC	CD2	DC	DF	GA1	U1	UY1	V1	Y1	Part-No
NEMA 56C	5.875	4.50	0.16	6.54	0.43	1.46	1.57	3.05	1.52	0.50	0.625	0.71	2.06	0.1875	60495500
NEMA 140TC	5.875	4.50	0.16	6.54	0.43	1.93	1.57	3.05	1.52	0.50	0.875	0.96	2.12	0.18	60595500

Send Quote Requests to info@automatedpt.com
Call +1(800)985-6929 To Order or Order Online At Nordgearmotors.com

NORD DRIVESYSTEMS

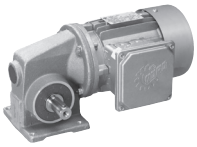

Double Worm
SK 1SMI40 - SK 1SMI75 IEC

Double Wormgear

The double wormgear is an adapter that enables the fitting of two MINICASE® worm modules together.

Double-worm gearmotor

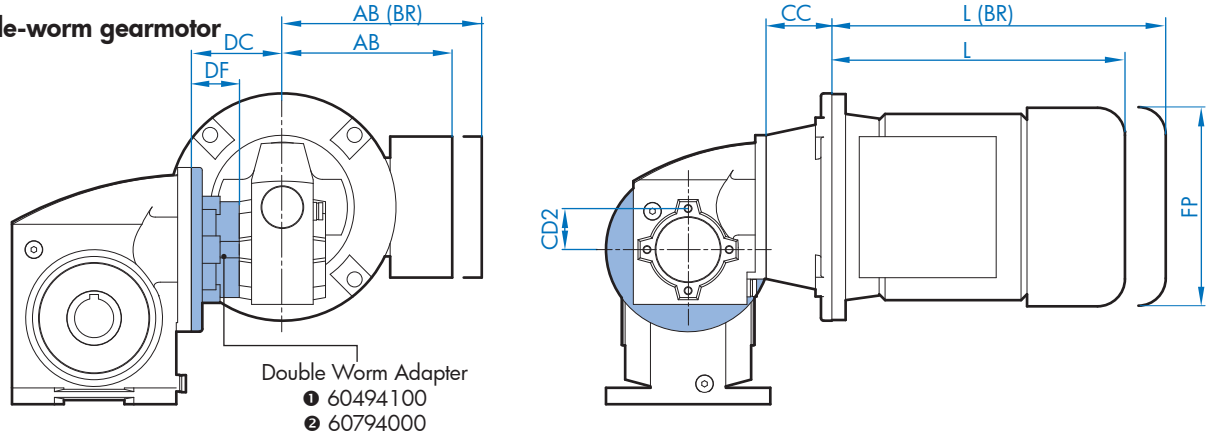

	❶ SK ... /31		❷ SK 1SMI75/40		
Standard eff.	63 S/L	71 S/L	63 S/L	71 S/L	80 S/L
Energy eff.					80 SH/LH
Premium eff.					80 SP/LP
AB	115	124	115	124	142
AB (BR)	123	133	123	133	143
L	192	214	192	214	236
L (BR)	248	272	248	272	300
FP	130	145	130	145	165

	Double Worm Kit	
	SK ... /31	SK 1SI75/40
CD2	31	40
DC	66.5	77.5
DF	35	38.5
Part-No:	60494100	60794000

Double-worm speed reducer with IEC motor adapter

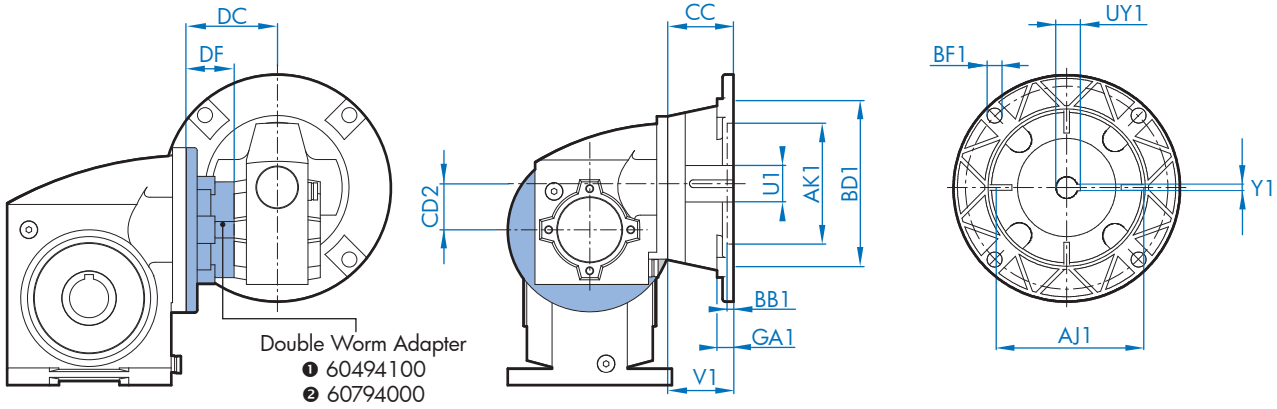

	SK ... /31					SK1SMI75/40									
	IEC 63 B14 C90	IEC 63 B14 C120	IEC 63 B5 A140	IEC 71 B14 C105	IEC 71 B14 C140	IEC 63 B14 C120	IEC 63 B5 A140	IEC 71 B14 C105	IEC 71 B14 C140	IEC 71 B5 A160	IEC 80 B14 C120	IEC 80 B14 C160	IEC 80 B5 A200	IEC 90 B14 C140	IEC 90 B14 C160
AJ1	75	100	115	85	115	100	115	85	115	130	100	130	165	115	130
AK1	60	80	95	70	95	80	95	70	95	110	80	110	130	95	110
BB1	3	3.5	3.5	3	3.5	3.5	3.5	3	3.5	4	3.5	4	4	3.5	4
BD1	90	120	140	105	140	120	140	105	140	160	120	160	200	140	160
BF1	6	7	9	7	9	7	9	7	9	9	7	9	M10	9	9
CD2	31	31	31	31	31	40	40	40	40	40	40	40	40	40	40
DC	66.5	66.5	66.5	66.5	66.5	77.5	77.5	77.5	77.5	77.5	77.5	77.5	77.5	77.5	77.5
DF	35	35	35	35	35	38.5	38.5	38.5	38.5	38.5	38.5	38.5	38.5	38.5	38.5
GA1	8	8	8	8	8	8	8	8	8	8	8	8	20	8	8
U1	11	11	11	14	14	11	11	14	14	14	19	19	19	24	24
UY1	12.8	12.8	12.8	16.3	16.3	12.8	12.8	16.3	16.3	16.3	21.8	21.8	21.8	27.3	27.3
V1	23	23	23	30	30	23	23	30	30	30	40	40	40	50	50
Y1	4	4	4	5	5	4	4	5	5	5	6	6	6	8	8

Send Quote Requests to info@automatedpt.com
Call +1(800)985-6929 To Order or Order Online At Nordgearmotors.com

IEC Adapters
SK 1SMI31 - SK 1SMI75

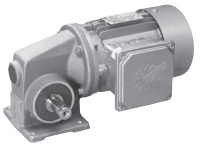

NORD DRIVESYSTEMS

IEC Adapters

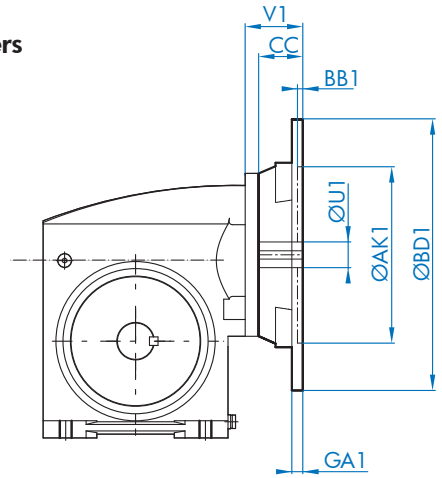

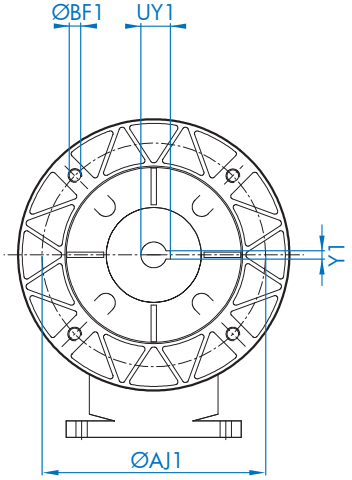

Dimensions in (mm)

	AJ1	AK1	BB1	BD1	BF1	GA1	U1	UY1	V1	Y1	CC SI 31	CC SI 40	CC SI 50	CC SI 63	CC SI 75	CC H10
IEC 56 B14 C105	85	70	3	105	7	8	9	11.4	20	3	29.5	32.5	32.5	32.5		32.5
IEC 56 B5 A120	100	80	3.5	120	7	8	9	11.4	20	3	29.5	32.5	32.5	32.5		32.5
IEC 63 B14 C90 *	75	60	3	90	6	8	11	12.8	23	4	29.5	32.5	32.5	32.5		32.5
IEC 63 B14 C120	100	80	3.5	120	7	8	11	12.8	23	4	29.5	32.5	32.5	32.5		32.5
IEC 63 B5 A140	115	95	3.5	140	9	8	11	12.8	23	4	29.5	32.5	32.5	32.5		32.5
IEC 71 B14 C105 *	85	70	3	105	7	8	14	16.3	30	5	29.5	32.5	32.5	32.5		32.5
IEC 71 B14 C140	115	95	3.5	140	9	8	14	16.3	30	5	29.5	32.5	32.5	32.5	36	32.5
IEC 71 B5 A160	130	110	4	160	9	8	14	16.3	30	5	-	32.5	32.5	32.5	36	32.5
IEC 80 B14 C120 *	100	80	3.5	120	7	8	19	21.8	40	6	-	32.5	32.5	32.5		32.5
IEC 80 B14 C160	130	110	4	160	9	8	19	21.8	40	6	-	32.5	32.5	32.5	36	32.5
IEC 80 B5 A200	165	130	4	200	M10	10	19	21.8	40	6	-	32.5	32.5	32.5	36	32.5
IEC 90 B14 C140 *	115	95	3.5	140	9	8	24	27.3	50	8	-	32.5	32.5	32.5	36	-
IEC 90 B14 C160	130	110	4	160	9	8	24	27.3	50	8	-	45.5	45.5	32.5	36	-
IEC 90 B5 A200	165	130	4	200	M10	10	24	27.3	50	8	-	-	-	32.5	36	-
IEC 100 B14 C160	130	110	4	160	9		28	31.3	60	8					36	
IEC 100 B14 C200	165	130	4	200	11		28	31.3	60	8					36	
IEC 100 B5 A250 *	215	165	5	250	M12	12	28	31.3	60	8					36	
IEC 112 B14 C160	130	110	5	160	9		28	31.3	60	8					36	
IEC 112 B14 C200	165	130	5	200	11		28	31.3	60	8					36	
IEC 112 B5 A250 *	215	165	5	250	M12	12	28	31.3	60	8					36	

	Kit Part Numbers					
IEC Inputs	SK 1SI31	SK1SI40	SK1SI50	SK1SI63	SK1SI75	SK...H10
IEC 56 B14 C105	60395100	60495100	60495100	60495100	–	60495100
IEC 56 B5 A120	60395200	60495200	60495200	60495200	–	60495200
IEC 63 B14 C90 *	60395010 *	60495010 *	60495010 *	60495010 *	–	60495010 *
IEC 63 B14 C120	60395110	60495110	60495110	60495110	–	60495110
IEC 63 B5 A140	60395210	60495210	60495210	60495210	–	60495210
IEC 71 B14 C105 *	60395020 *	60495020 *	60495020 *	60495020 *	–	60495020 *
IEC 71 B14 C140	60395120	60495120	60495120	60495120	60795120	60495120
IEC 71 B5 A160	–	60495220	60495220	60495220	60795220	60495220
IEC 80 B14 C120 *	–	60495030 *	60495030 *	60495030 *	–	60495030 *
IEC 80 B14 C160	–	60495130	60495130	60495130	60795130	60495130
IEC 80 B5 A200	–	60495230	60495230	60495230	60795230	60495230
IEC 90 B14 C140 *	–	60495040 *	60495040 *	60695040 *	60795040 *	–
IEC 90 B14 C160	–	60495140	60495140	60695140	60795140	–
IEC 90 B5 A200	–	60459240	60459240	60695240	60795240	–
IEC 100 B14 C160	–	–	–	–	60795050	–
IEC 100 B14 C200	–	–	–	–	60795150	–
IEC 100 B5 A250 *	–	–	–	–	60795250 *	–
IEC 112 B14 C160	–	–	–	–	60795050	–
IEC 112 B14 C200	–	–	–	–	60795150	–
IEC 112 B5 A250 *	–	–	–	–	60795250 *	–

* Standard

Send Quote Requests to info@automatedpt.com
Call +1(800)985-6929 To Order or Order Online At Nordgearmotors.com

NORD DRIVESYSTEMS

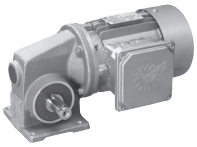

Hollow Shaft Detail SK 1SMI31 - SK 1SMI75

Hollow Shaft Dimensions

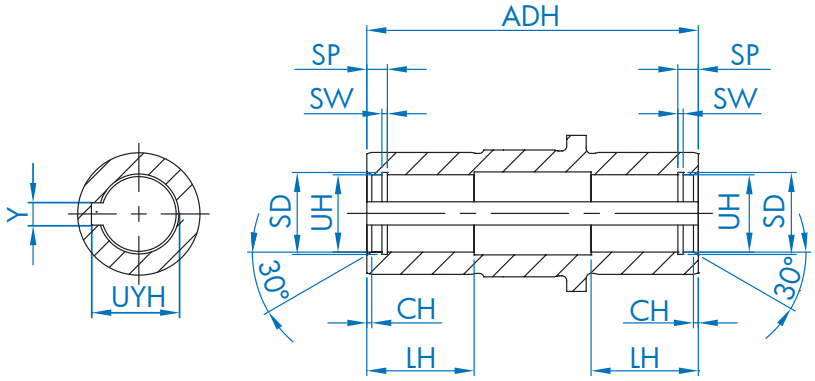

Inch Type	UH		ADH	CH	LH	SP	SW	SD	UYH	Y	Customer Supplied Key
SK 1SMI31	0.500	+ 0.0010 - 0.0000	2.68	0.039	0.87	0.165	0.043	0.524	0.56	0.125	1/8 x 1/8
	0.625*	+ 0.0010 - 0.0000	2.68	0.039	0.87	0.165	0.043	0.661	0.71	0.1875	3/16 x 3/16
SK 1SMI40 SK 1SMI40/31 SK 1SMI40/H10	0.750	+ 0.0010 - 0.0000	3.27	0.039	1.18	0.224	0.063	0.789	0.84	0.1875	3/16 x 3/16
	1.000*	+ 0.0010 - 0.0000	3.27	0.039	1.18	0.224	0.063	1.047	1.114	0.250	1/4 x 1/4
SK 1SMI50 SK 1SMI50/31 SK 1SMI50/H10	1.000	+ 0.0010 - 0.0000	3.82	0.039	1.18	0.224	0.063	1.047	1.114	0.250	1/4 x 1/4
	1.125*	+ 0.0010 - 0.0000	3.82	0.039	1.18	0.224	0.063	1.181	1.241	0.250	1/4 x 1/4
SK 1SMI63 SK 1SMI63/31 SK 1SMI63/H10	1.1875	+ 0.0010 - 0.0000	4.61	0.039	1.18	0.264	0.063	1.254	1.27	0.375	3/8 x 1/4
	1.250	+ 0.0010 - 0.0000	4.61	0.039	1.18	0.264	0.063	1.317	1.37	0.250	1/4 x 1/4
	1.4375*	+ 0.0010 - 0.0000	4.61	0.039	1.38	0.264	0.073	1.516	1.605	0.375	3/8 x 3/8
SK 1SMI75 SK 1SMI75/40	1.9375*	+ 0.0012 - 0.0000	5.12	0.059	1.57	0.315	0.085	2.036	2.097	0.500	1/2 x 3/8

*** Standard (inch) Hollow bores will accomodate available inch plug-in shaft kits and inch bushing kits.**

Metric Type	UH		ADH	CH	LH	SP	SW	SD	UYH	Y	Customer Supplied Key
SK 1SMI31	14◆	+ 0.018 - 0.000	68	1	22	4.2	1.1	14.6	16.3	5	5 x 5
	16	+ 0.018 - 0.000	68	1	22	4.2	1.1	16.8	18.3	5	5 x 5
SK 1SMI40 SK 1SMI40/31 SK 1SMI40/H10	18 ◆	+ 0.018 - 0.000	83	1	30	5.7	1.6	19.0	20.8	6	6 x 6
	20	+ 0.018 - 0.000	83	1	30	5.7	1.6	21.0	22.8	6	6 x 6
SK 1SMI50 SK 1SMI50/31 SK 1SMI50/H10	20	+ 0.021 - 0.000	97	1	30	5.7	1.6	21.0	22.8	6	6 x 6
	25 ◆	+ 0.021 - 0.000	97	1	30	5.7	1.6	26.2	28.3	8	8 x 7
SK 1SMI63 SK 1SMI63/31 SK 1SMI63/H10	25 ◆	+ 0.021 - 0.000	117	1	35	6.7	1.6	26.2	28.3	8	8 x 7
	30	+ 0.021 - 0.000	117	1	35	6.7	1.6	37	33.3	8	8 x 7
SK 1SMI75 SK 1SMI75/40	35 ◆	+ 0.025 - 0.000	130	1.5	40	8.0	1.6	37.0	38.3	10	10 x 8

◆ Standard (metric) Hollow bores will accomodate available metric plug-in shaft kits.

Send Quote Requests to info@automatedpt.com
Call +1(800)985-6929 To Order or Order Online At Nordgearmotors.com

MINICASE® Solid Shaft Dimensions (V)

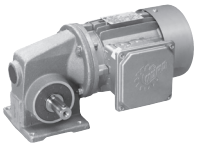

NORD DRIVESYSTEMS

Solid Shaft Dimensions

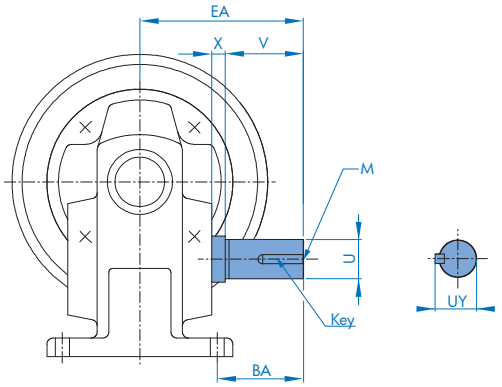

In/mm Footed (VX) & B14 (VZ)

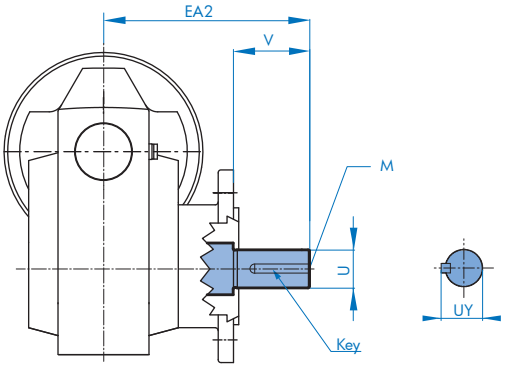

In/mm B5 Flange (VF)

Inch Type	U		V	X	UY	BA	EA	EA2	M (Drill x Tap)	Key (w x h x l)
SK 1SMI31	0.500	+0.0000 - 0.0005	1.12	0.315	0.56	1.204	2.68	3.69	1/4 - 20 x 0.43	1/8 x 1/8 x 7/8
	0.625	+0.0000 -0.0005	1.57	0.197	0.70	1.535	3.02	4.13	1/4 - 20 x 0.43	3/16 x 3/16 x 1-1/4
SK 1SMI40 SK 2SMI40	0.750	+0.0000 - 0.0005	1.50	0.354	0.83	1.421	3.39	4.45	1/4 - 20 x 0.59	3/16 x 3/16 x 1
	0.750	+0.0000 -0.0005	1.57	0.197	0.83	1.417	3.39	4.53	1/4 - 20 x 0.43	3/16 x 3/16 x 1-1/4
SK 1SMI50 SK 2SMI50	1.000	+0.0000 -0.0005	1.97	0.197	1.11	2.106	4.07	5.32	3/8 x 16 x 0.87	1/4 x 1/4 x 1-5/8
	1.000	+0.0000 - 0.0005	2.00	0.354	1.11	2.197	4.17	5.35	3/8 x 16 x 0.87	1/4 x 1/4 x 1-5/8
SK 1SMI63 SK 2SMI63	1.125	+0.0000 -0.0005	2.36	0.197	1.24	2.738	4.90	6.06	1/2 x 13 x 1.10	1/4 x 1/4 x 2
	1.250	+0.0000 - 0.0005	2.75	0.039	1.36	2.830	4.99	6.45	1/2 x 13 x 1.10	1/4 x 1/4 x 1-5/8
SK 1SMI75 SK 2SMI75	1.375	+0.0000 - 0.0005	2.76	0.197	1.51	2.657	5.41	6.97	5/8 x 11 x 1.42	5/16 x 5/16 x 2-1/8

Metric Type	U		V	X	UY	BA	EA	EA2	M (Drill x Tap)	Key (w x h x l)
SK 1SMI31	14 mm	+0.012 +0.001	30 mm	5	16 mm	29	66.5 mm	95 mm	M5 x 12.5 mm	5 x 5 x 25 mm
SK 1SMI40 SK 2SMI40	18 mm	+0.012 +0.001	40 mm	5	20.5 mm	34	84 mm	115 mm	M6 x 16 mm	6 x 6 x 32 mm
	20 mm	+0.000 -0.013	40 mm	5	22.5 mm	34	84 mm	115 mm	M6 x 16 mm	6 x 6 x 32 mm
SK 1SMI50 SK 2SMI50	20 mm	+0.012 +0.001	40 mm	5	22.5 mm	41	91 mm	125 mm	M6 x 16 mm	6 x 6 x 32 mm
	25 mm	+0.015 +0.002	50 mm	5	28 mm	51	101 mm	135 mm	M10 x 22 mm	8 x 7 x 40 mm
SK 1SMI63 SK 2SMI63	25 mm	+0.015 +0.002	50 mm	5	28 mm	56	111 mm	144 mm	M10 x 22 mm	8 x 7 x 40 mm
SK 1SMI75 SK 2SMI75	35 mm	+0.018 +0.002	70 mm	5	38 mm	67.5	137.5 mm	177 mm	M12 x 28 mm	10 x 8 x 50 mm

Send Quote Requests to info@automatedpt.com
Call +1(800)985-6929 To Order or Order Online At Nordgearmotors.com

NORD DRIVESYSTEMS

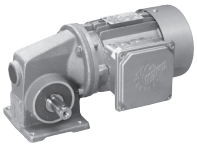

MINICASE® Plug-In Solid Shaft Dimensions (V)

Plug-In Solid Shaft Dimensions

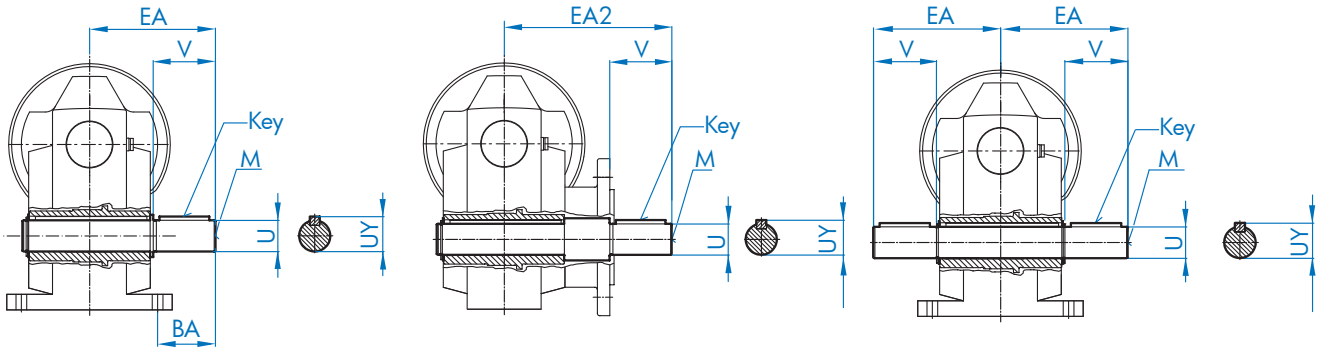

Inch	U		V	BA	EA	EA2	UY	M	Key
SK 1SMI31	0.625	+ 0.0000 - 0.0005	1.57	1.54	3.02	4.13	0.70	1/4-20 x 0.59	3/16 x 3/16 x 1-1/4
SK 1SMI40 SK 1SMI40/31 SK 1SMI40/H10	0.750	+ 0.0000 - 0.0005	1.57	1.42	3.39	4.52	0.83	1/4-20 x 0.59	3/16 x 3/16 x 1-1/4
SK 1SMI50 SK 1SMI50/31 SK 1SMI40/H10	1.000	+ 0.0000 - 0.0005	1.97	2.11	4.07	5.32	1.11	3/8-16 x 0.87	1/4 x 1/4 x 1-5/8
SK 1SMI63 SK 1SMI63/31 SK 1SMI63/H10	1.125	+ 0.0000 - 0.0005	2.36	2.74	4.90	6.06	1.24	1/2-13 x 1.10	1/4 x 1/4 x 2
SK 1SMI75 SK 1SMI75/40	1.375	+ 0.0000 - 0.0005	2.75	2.66	5.41	6.96	1.51	5/8 -11 x 1.42	5/16 x 5/16 x 2-1/8

Metric	U		V	BA	EA	EA2	UY	M	Key
SK 1SMI31	14	+ 0.012 + 0.001	30	29	66.5	95	16	M5 x 12.5 mm	5 x 5 x 25
SK 1SMI40 SK 1SMI40/31 SK 1SMI40/H10	18	+ 0.012 + 0.001	40	34	84	115	20.5	M6 x 16 mm	6 x 6 x 32
SK 1SMI50 SK 1SMI50/31 SK 1SMI40/H10	25	+ 0.018 + 0.002	50	51	101	135	28	M10 x 22 mm	8 x 7 x 40
SK 1SMI63 SK 1SMI63/31 SK 1SMI63/H10	25	+ 0.018 + 0.002	50	56	111	144	28	M10 x 22 mm	8 x 7 x 40
SK 1SMI75 SK 1SMI75/40	35	+ 0.018 + 0.002	70	67.5	137.5	177	38	M12 x 28 mm	10 x 8 x 50

Send Quote Requests to info@automatedpt.com
Call +1(800)985-6929 To Order or Order Online At Nordgearmotors.com

Hollow Shaft Bushing Kit (J)

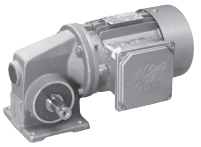

NORD DRIVESYSTEMS

Inch Hollow Shaft Bushing Kit

DIMENSIONS

Dimensions in Inches

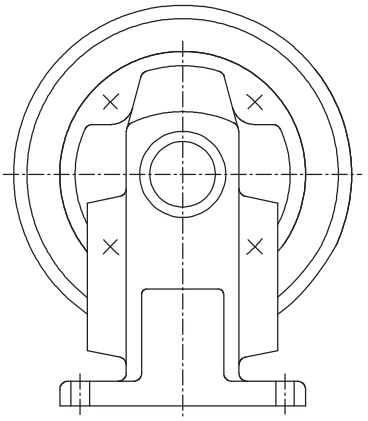

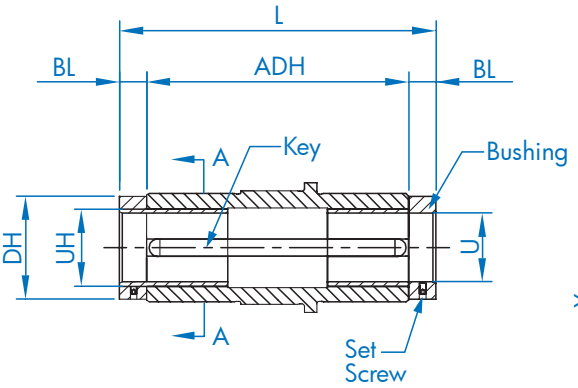

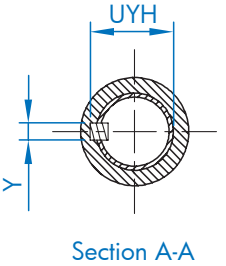

Customer Solid Shaft

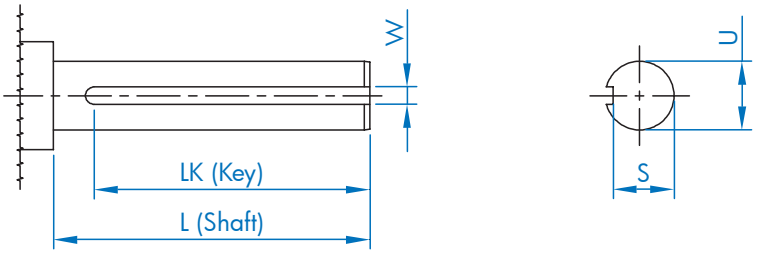

Type	Hollow shaft				Bushing Kit				Customer Solid Shaft					Bushing
	UH	ADH	UYH	Y	BL	DH	U	KEY	L	U	S	W	LK	KIT P/N
SK 1SMI50 SK 1SMI50/31 SK 1SMI40/H10	1.125	3.82	1.241	0.25	0.39	1.50	1.000	0.25x0.3125x3.43	4.61	1.000	0.859	0.25	4.05	60593400
SK 1SMI63 SK 1SMI63/31 SK 1SMI63/H10	1.4375	4.61	1.605	0.375	0.39	1.73	1.000	0.25x0.375x0.522x4.13	5.39	1.000	0.859	0.25	4.77	60693400
SK 1SMI63 SK 1SMI63/31 SK 1SMI63/H10	1.4375	4.61	1.605	0.375	0.39	1.73	1.250	0.25x0.375x0.394x4.13	5.39	1.250	1.112	0.25	4.77	60693420
SK 1SMI75 SK 1SMI75/40	1.9375	5.12	2.160	0.500	0.39	2.28	1.250	0.25x0.5x0.638x4.53	5.91	1.250	1.112	0.25	5.22	60793400
SK 1SMI75 SK 1SMI75/40	1.9375	5.12	2.160	0.500	0.39	2.28	1.4375	0.375x0.5x0.583x4.53	5.91	1.4375	1.225	0.375	5.22	60793420
SK 1SMI75 SK 1SMI75/40	1.9375	5.12	2.160	0.500	0.39	2.28	1.500	0.375x0.5x0.583x4.53	5.91	1.500	1.289	0.375	5.22	60793410

Send Quote Requests to info@automatedpt.com
Call +1(800)985-6929 To Order or Order Online At Nordgearmotors.com

DRIVESYSTEMS

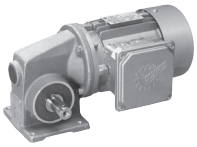

Fixing Kit [B]

Fixing Kit

Not available in combination with H (shaft cover) option

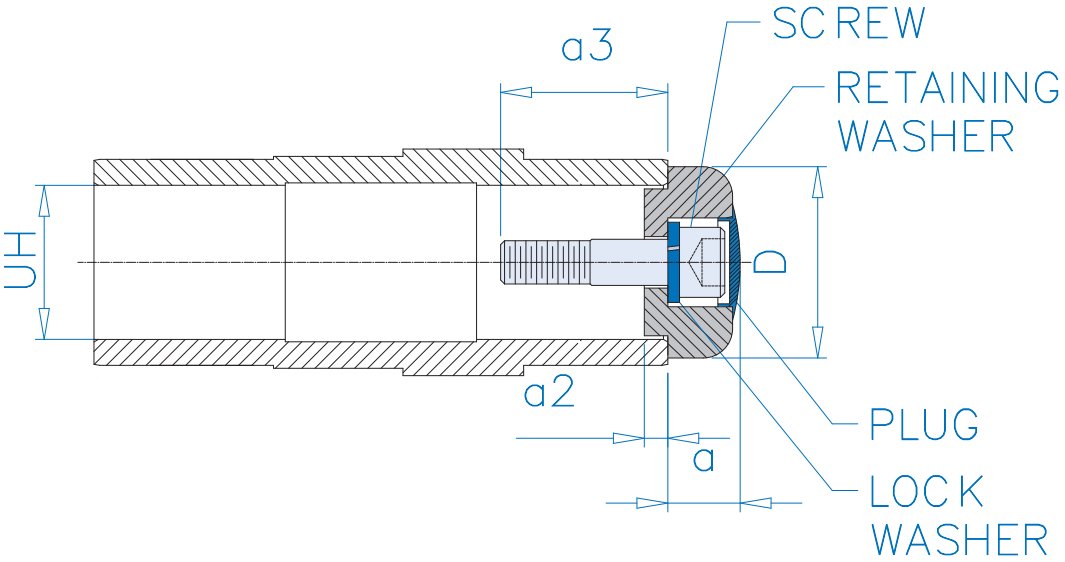

UH	D	a	a2	Screw ❶	a3 ❶	Screw ❷	a3 ❷	Screw ❸	a3 ❸
0.500	0.984	0.563	0.110	10 - 32 x 0.625	0.452	-	-	-	-
0.625	0.984	0.563	0.110	10 - 32 x 0.625	0.452	-	-	-	-
0.750	1.181	0.551	0.118	1/4 - 20 x 3/4	0.629	1/4 - 20 x 1	0.879	-	-
1.000	1.496	0.756	0.150	3/8 - 16 x 3/4	0.530	3/8 - 16 x 1-1/4	1.030	-	-
1.125	1.496	0.756	0.150	3/8 - 16 x 3/4	0.530	3/8 - 16 x 1-1/4	1.030	-	-
1.1875	1.575	0.756	0.150	7/16 - 14 x 2-1/16	1.906	-	-	-	-
1.250	1.575	0.756	0.150	7/16 - 14 x 2-1/16	1.906	-	-	-	-
1.4375	1.772	0.906	0.197	5/8 - 11 x 1-1/2	1.303	5/8 - 11 - 2-1/4	2.053	5/8 - 11 x 1	0.803
1.9375	2.362	0.966	0.315	5/8 - 11 x 2-1/4	2.250	-	-	-	-

UH	D	a	a2	Screw ❶	a3 ❶	Screw ❷	a3 ❷	-	-
16	25	14.3	2.8	M5 x 20	15.6	-	-	-	-
20	30	14	3	M6 x 30	26.9	M6 x 22	18.9	-	-
25	38	19.2	3.8	M10 x 45	39.6	M10 x 30	24.6	-	-
30	40	16.28	5	M10 x 45	42.8	M10 x 30	27.8	-	-
35	45	23.5	3.8	M12 x 55	54	M12 x 35	34		

❶, ❷, ❸ - Each fixing element kit may contain up to 3 different kinds of screws

Send Quote Requests to info@automatedpt.com
Call +1(800)985-6929 To Order or Order Online At Nordgearmotors.com

Send Quote Requests to info@automatedpt.com
Call +1(800)985-6929 To Order or Order Online At Nordgearmotors.com

Notes

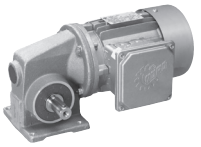

NOTES

Send Quote Requests to info@automatedpt.com
Call +1(800)985-6929 To Order or Order Online At Nordgearmotors.com

Send Quote Requests to info@automatedpt.com
Call +1(800)985-6929 To Order or Order Online At Nordgearmotors.com

Motors

- Order Form
- NEMA C-Face Motors
- Engineering Information
- Options
- Environmental Options
- AC Vector Drive Options
- Additional Options
- Ratings Tables
- Dimensions
- Connection Diagrams

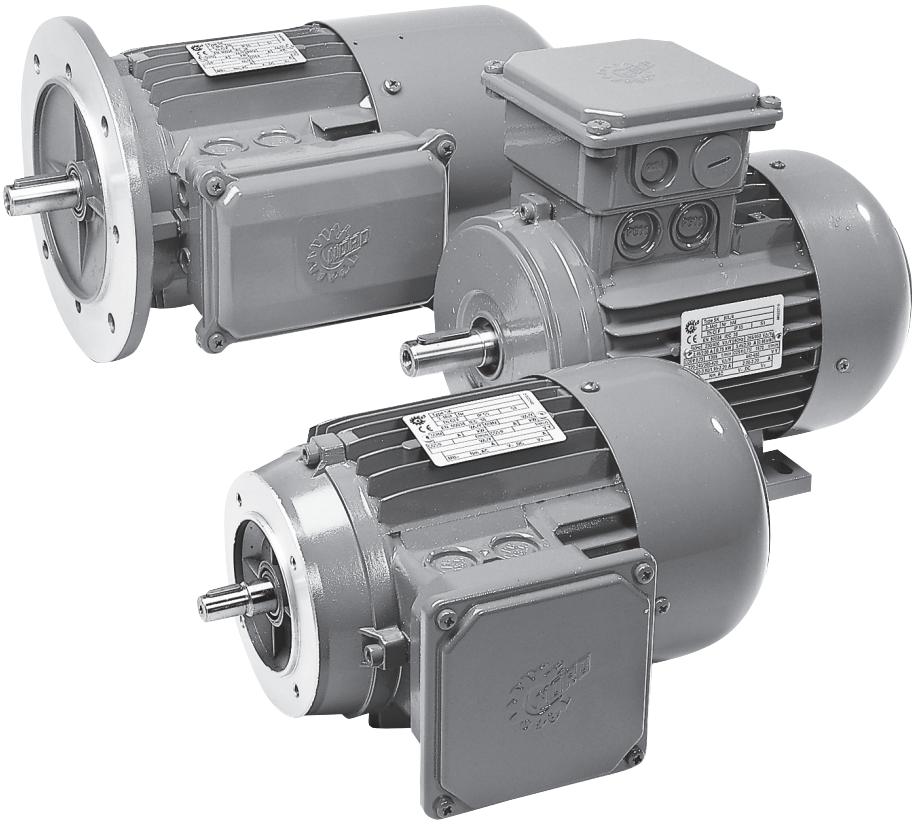

NORD® DRIVESYSTEMS

www.nord.com

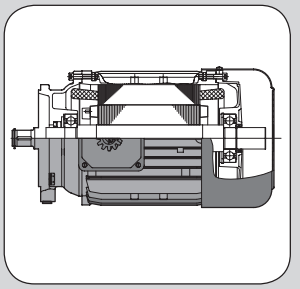

INVERTER DUTY MOTOR

Send Quote Requests to info@automatedpt.com
Call +1(800)985-6929 To Order or Order Online At Nordgearmotors.com

Motor Order Form

NORD DRIVESYSTEMS

	Frame	Size	Poles	Motor Options	Brake Size	Brake Options
SK						

Frame	Size	Poles
63	S	4
71	SH	2
80	SP	6
90	M	4-2
100	MH	8-2
112	MP	8-4
	MX	12-2
	L	Other
	LA	
	LH	
	LP	
	LX	

Paint

- ❍ Unpainted Aluminum Alloy
- ❍ Stainless Steel Paint
- ❍ NSD+ (gray)
- ❍ NSD+W (white)
- ❍ NSD-X3 (gray)
- ❍ NSD-X3W (white)
- ❍ Special _____

Electrical Motor Options

- ❒ **H** - Energy Efficient Motor
- ❒ **P** - Premium Efficient Motor
- ❒ **TW** - Thermostat
- ❒ **TF** - Thermistor
- ❒ **SH** - Space Heater (select voltage)
  - ❍ 110 Volt ❍ 230 Volt ❍ 460 Volt
- ❒ **ISO** H - Class H insulation
- ❒ **WU** - High Resistance Rotor
- ❒ **4-2** - 2-Speed, 4/2 Pole, 1800/3600rpm
- ❒ **8-2** - 2-Speed, 8/2 Pole, 900/3600rpm
- ❒ **ECR** - Single Phase Motor

Environmental Options

- ❒ **NSD+** - Nord Severe Duty Paint
- ❒ **NSDx3** - Nord Extreme Duty Paint
- ❒ **RD** - Canopy Drip Cover
- ❒ **RDD** - Double Fan Cover
- ❒ **KB** - Condensation Drain Holes (plugged)
- ❒ **KBO** - Condensation Drain Holes (open)
- ❒ **IP66** - IP66 Enclosure Protection
- ❒ **KKV** - Terminal Box Sealed with Resin
- ❒ **AICM** - Additional Insulation
- ❒ **EP** - Epoxy Dipped Windings

AC Vector Drive Related Options

- ❒ **F** - Blower Fan (200-575V 1 & 3 Phase)
- ❒ **FC** - Blower Cooling Fan (115V, 1 Phase)
- ❒ **IG__** - Incremental Encoder
- ❒ **IG__P** - Incremental Encoder with Plug
- ❒ **AG** - Absolute Encoder
- ❒ **MG** - Magnetic Encoder

Additional Motor Options

- ❒ **OL** - Totally Enclosed Non-Ventilated (TENV)
- ❒ **OL/H** - (TENV) Without Fan Cover
- ❒ **WE** - Second Shaft Extension (Fan Side)
- ❒ **HR** - Hand Wheel
- ❒ **Z** - High Inertia Cast Iron Fan
- ❒ **RLS** - Motor Backstop (rotation viewing fan)
  - ❍ Clockwise ❍ Counter-Clockwise
- ❒ **EKK** - Small Terminal Box (not UL approved)
- ❒ **MS** - Quick Power Plug Connector

Brake Size
BRE 5
BRE 10
BRE 20
BRE 40
BRE 60

Brake Options

- ❒ **HL** - Hand Release Lever
- ❒ **FHL** - Locking Hand Release Lever
- ❒ **HLH** - Hand Release Lever with Hole
- ❒ **RG** - Corrosion Protected Brake
- ❒ **SR** - Dust and Corrosion Protected Brake
- ❒ **ADJ_____Nm** - Adjust Brake Torque
- ❒ **BIP66** - IP66 Brake Enclosure
- ❒ **MIK** - Micro-switch
- ❒ **BSH** - Brake Heating/Bifilar Coil
- ❒ **NRB1** - Quiet Brake Release
- ❒ **NRB2** - Quiet Brake Motor Operation
- ❒ **FBR** - Brass Foil
- ❒ **DBR** - Double Brake
- ❒ **G...P** - High Performance Rectifier
- ❒ **G...V** - Sealed Rectifier
- ❒ **IR** - Current Sensing Relay

Rectifier Selection

Rectifier Wiring

- ❍ Across the line (from motor terminal box)
- ❍ Separate power source (frequency AC vector drive, soft starter)

Brake Supply Voltage

- ❍ 24 VDC
- ❍ 115 VAC
- ❍ 200 VAC
- ❍ 230 VAC
- ❍ 400 VAC
- ❍ 460 VAC
- ❍ 500 VAC
- ❍ 575 VAC
- ❍ Other _____

Braking Method*

- ❍ Method 10
- ❍ Method 15
- ❍ Method 20
- ❍ Method 25
- ❍ Method 30
- ❍ Method 35
- ❍ Method 40
- ❍ Method 45
- ❍ Method 50
- ❍ Method 55

* More info on page 273

Hand Release Position

- ❍ HL1
- ❍ HL2
- ❍ HL3
- ❍ HL4

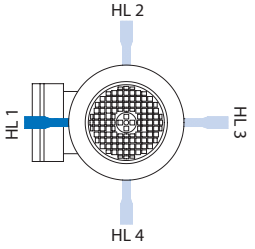

Mounting

- ❍ Integral to gearbox
- ❍ NEMA C-Face
- ❍ NEMA T-Footed
- ❍ IEC B5 Mount
- ❍ IEC B14 Mount
- ❍ IEC B3-Footed

Voltage & Frequency

- ❍ 230/460V-60Hz
- ❍ 575V-60Hz
- ❍ 208V-60Hz
- ❍ 400V-50Hz
- ❍ 115/230V, 60Hz-1-ph.
- ❍ Other

Terminal Box Pos.

- ❍ TB1
- ❍ TB2
- ❍ TB3
- ❍ TB4

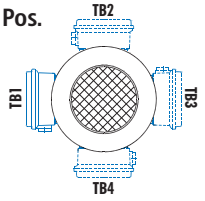

Mtg. Pos. M1 Shown

Conduit Entry Loc.

- ❍ CE I *
- ❍ CE II
- ❍ CE III *
- ❍ CE IV

*Brakemotor

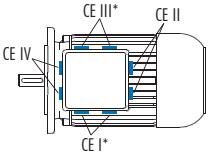

Mtg. Pos. M1 Shown

Send Quote Requests to info@automatedpt.com
Call +1(800)985-6929 To Order or Order Online At Nordgearmotors.com

DRIVESYSTEMS

Stocked NEMA C-Face Motors

NEMA C-Face Motors

The National Electrical Manufacturers Association (NEMA) provides standardization of electrical equipment, enabling customers to select from a range of safe, effective and compatible products. A NEMA C-face motor has a machined face with a pilot and threaded holes for direct mounting onto a NORD reducer or other industrial equipment. NORD offers NEMA C-face motors stocked as finished goods and will also assemble NEMA C-face motors to your specifications. For ratings, see page 236.

Stocked NEMA C-Face Motors

Stocked NEMA C-face motors are offered in standard efficiency, energy efficient and in a brakemotor design. They are available in 230/460V-60Hz and 575V-60Hz up to 10 hp. Part numbers for stocked NEMA C-face motors are in the table below.

Assembled per Order NEMA C-Face Motors

NORD will assemble a NEMA C-face motor to your specifications based upon the available motor options from this catalog.

Motor Type	Power	Part Number 230/460V-60Hz	Part Number 575V-60Hz	Weight [lb]
High Performance Motors				
63S/4-56C	1/6 hp	31110012	31110013	7.9
63L/4-56C	1/4 hp	31610012	31610013	9.3
71S/4-56C	1/3 hp	32110012	32110013	11.9
71L/4-56C	1/2 hp	32610012	32610013	13.9
80S/4-56C	3/4 hp	33110012	33110013	17.6
80L/4-56C	1 hp	33610022	n/a	19.8
Energy Efficient Motors ee				
80LH/4-56C	1 hp	33610094	33610095	19.8
80LH/4-143TC	1 hp	33610092	33610093	19.8
90SH/4-145TC	1.5 hp	34110092	34110093	26.5
90LH/4-145TC	2 hp	34610092	34610093	30.9
100LH/4-182TC	3 hp	35610092	35610093	39.7
112MH/4-184TC	5 hp	36110082	36110083	83.6
Premium Efficient Motors pe				
80 LP/4-56C TW	1 hp	33610294	33610295	
80 LP/4-143TC TW	1 hp	33610292	33610293	22.5
90 SP/4-145TC TW	1.5 hp	34110292	34110293	33.3
90 LP/4-145TC TW	2 hp	34610292	34610293	36.8
100 LP/4-182TC TW	3 hp	35110292	35110293	55.6
112MP/4-184TC TW	5 hp	36110292	36110293	78.3
Brakemotors				
63S/4-56C BRE5 HL	1/6 hp	31110034 ◈	31110035 ∗	12.4
63L/4-56C BRE5 HL	1/4 hp	31610034 ◈	31610035 ∗	13.7
71S/4-56C BRE5 HL	1/3 hp	32110034 ◈	32110035 ∗	16.3
71L/4-56C BRE5 HL	1/2 hp	32610034 ◈	32610035 ∗	18.3
80S/4-56C BRE10 HL	3/4 hp	33110034 ◈	33110035 ∗	24.3
80L/4-56C BRE10 HL	1 hp	33610024 ◈	33610025 ∗	26.5
80L/4-143TC BRE10 HL	1 hp	33610034 ◈	33610035 ∗	26.5
Energy Efficient Brakemotors ee				
80LH/4-56C BRE10 HL	1 hp	33610082 ◈	33610083 ∗	19.8
80LH/4-143TC BRE10 HL	1 hp	33610084 ◈	33610085 ∗	19.8
90SH/4-145TC BRE20 HL	1.5 hp	34110084 ◈	34110085 ∗	26.5
90LH/4-145TC BRE20 HL	2 hp	34610084 ◈	34610085 ∗	30.9
100LH/4-182TC BRE40 HL	3 hp	35110084 ◈	35110085 ∗	39.7
112MH/4-184TC BRE40 HL	5 hp	36110084 ◈	36110085 ∗	83.6
Premium Efficient Brakemotors pe				
80LP/4-56C BRE10 HL	1 hp	33610282 ◈	33610283 ∗	19.8
80LP/4-143TC BRE10 HL	1 hp	33610284 ◈	33610285 ∗	19.8
90SP/4-145TC BRE20 HL	1.5 hp	34110284 ◈	34110285 ∗	26.5
90LP/4-145TC BRE20 HL	2 hp	34610284 ◈	34610285 ∗	30.9
100LP/4-182TC BRE40 HL	3 hp	35110284 ◈	35110285 ∗	39.7
112MP/4-184TC BRE40 HL	5 hp	36110284 ◈	36110285 ∗	83.6

◈230/460V motors have brake systems supplied with 230VAC to a GVE20L rectifier that outputs 205VDC to the brake coil

∗ 575V motors have brake systems supplied with 575VAC to a GHE50L rectifier that outputs 250VDC to the brake coil

MOTORS

Send Quote Requests to info@automatedpt.com
Call +1(800)985-6929 To Order or Order Online At Nordgearmotors.com

Send Quote Requests to info@automatedpt.com Call +1(800)985-6929 To Order or Order Online At Nordgearmotors.com

Global Standards

Standards

All motors are in accordance with existing standards and regulations:

NEMA MG 1 - Motors and Generators:

- Electrical performance
- Motors for operation on variable AC vector drive

UL 1004 – Electric Motors

CSA C22.2 No. 100-04 - Motors and Generators:

Industrial Products IEC 60034 parts 1, 5, 6, 8, 9, 11, 12 and 14.

- Part 1 – General rules
- Part 5 – Types of enclosures
- Part 6 – Types of cooling
- Part 8 – Terminal lead designations and sense of rotation
- Part 9 – Noise limits
- Part 11 – Integrated thermal protection
- Part 12 – Starting Performance
- Part 14 – Mechanical vibration

INVERTER DUTY MOTOR

Inverter/Vector Duty

NORD single–speed motors are Inverter/Vector Duty. The construction of the NORD motors insulating system takes into account the non-sinusoidal wave forms produced by variable frequency drives. NORD uses high grade insulating components and extra first turn protection as well as double coated wire to ensure long service life when connected to AC vector drives. NORD motors can produce full torque at zero speed if properly sized, selected and controlled.

IEC 60038 – Standard voltages

CE	NORD motors carry the CE mark in accordance with the Low Voltage Directive and, if installed properly, the Electromagnetic Compatibility Directive (EMC). The CE mark is required for installation in European Union (EU) states.
	Many NORD motors from frame size 63 to 315 are an Underwriters Laboratories Recognized component per UL standard 1004. Frames 63-180 File number E191510 Frames 200+ File number E227215
C US	The Canadian Standards Association CUS mark indicates that CSA has tested and approved NORD motors according to both US and Canadian standards. It is equivalent to the Underwriters Laboratories RU recognition mark (UL standard 1004) and the CSA mark according to CSA Standard C22.2 No. 100-04 Frames 63-180 File number LR112560 Frame 200+ File number LR13494
ee	NORD Energy Efficient motors up to frame 180 have been evaluated by the United States Department of Energy and recieved a Certificate of Compliance to certify the efficiency ratings. The certificate of compliance is CC 092B.
pe	NORD Premium Efficient motors up to frame 180 have been evaluated by the United States Department of Energy and recieved a Certificate of Compliance to certify the efficiency ratings. The certificate of compliance is CC 092B.
energy verified	NORD energy efficient motors carry the CSA energy efficiency verification mark. This mark ensures that CSA has verified that NORD motors are designed and manufactured to meet energy efficiency requirements number EEV112560.
	China Compulsory Certification Nr.: 200 701 040 125 842 9
	GOST® certificate for the import of motors into Russia.

For more information on current motor efficiency regulations please see page 246.

Send Quote Requests to info@automatedpt.com
Call +1(800)985-6929 To Order or Order Online At Nordgearmotors.com

Send Quote Requests to info@automatedpt.com Call +1(800)985-6929 To Order or Order Online At Nordgearmotors.com

Standard Design & Construction

Standard Motor Construction

Our motors are an important part of our ability to provide a high quality, competitive, and complete drive system. NORD motors are designed for across the-line or inverter/vector duty operation. NORD motors are constructed with superior insulating methods to provide excellent moisture protection, low temperature rise, and voltage spike resistance in accordance with NEMA MG1. Low rotor inertia and high starting torque allow peak performance in difficult applications involving high start/stop cycling rates or rapid acceleration/deceleration. Standard motors offer protection from the elements with many standard and optional design features.

Some of the standard design bernefits include:

- Shaft lip seals on both ends of the motor shafts.
- Stator to endbell connections sealed to exclude moisture.
- Double coated magnetic wire insulation.
- Inverter/vector duty insulation system conforms to NEMA MG1-2009, section 31.4.4.2 voltage spikes.
- Moisture resistant varnish dipped windings with improved varnish materials.
- Inorganic insulating components for tropical protection.
- Conduit box sealed with gaskets.
- Corrosion resistant alloy materials.
- Threaded cable entry holes.

Terminal Block

Each NORD motor uses a terminal block, which is a superior method of wire termination when compared to pigtail leads. A terminal block ensures long-term reliability of the power connections.

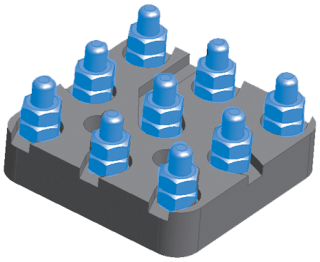

Non-Sparking Fan

The standard NORD motor fan is a non-sparking design. The fan will also provide proper airflow in either direction of rotation.

Inverter/Vector Duty – Voltage Spikes

All NORD motors are constructed with an insulating system designed to withstand the repeated voltage spikes generated by modern AC vector drives. The insulation system withstands the ratings in conformance with NEMA MG 1-2009 Section 31.4.4.2 Voltage Spikes.

$V_{peak} = 3.1 \times V_{rated}$ with a Rise time $\leq 0.1\mu s$.

Insulation System

The NORD motor insulation system is designed to provide a superior degree of protection. NORD utilizes the following insulation components:

- Magnet wire – double coated insulation
- Varnish dip impregnation
- Slot liners
- Phase paper & separators
- Top sticks
- Wire sleeve connectors

Other motor manufacturers eliminate some of these insulating components for cost reduction which leads to less reliability.

Tropical Protection (Anti-fungal)

As a standard the NORD motor insulation system is tropically protected. The insulating and construction components are made of inorganic materials that resist fungal growth.

Low Inertia

The motor inertia in all NORD motors is extremely low which allows for an increased dynamic motor control capability. Low motor inertia is a significant advantage when using NORD motors with AC vector drives or controllers. NORD motors have the ability to cycle more frequently and require less mechanical energy to start than the standard NEMA frame motors. This leaves more energy to start the load.

High Torque

NORD motors produce a higher starting torque than what is required by NEMA standards. This is achieved through improved motor winding, rotor design and construction.

Service Factor

NORD motor's with ratings of either 230/460V-60Hz and 332/575V-60Hz have a service factor of 1.15. Almost all other motors have a service factor of 1.1 or 1.0.

Send Quote Requests to info@automatedpt.com
Call +1(800)985-6929 To Order or Order Online At Nordgearmotors.com

Standard Design & Construction

NORD DRIVESYSTEMS

Poles / speeds

NORD offers a variety of single and two speed motors in addition to the standard 4 pole motor. NORD single speed motors are inverter/vector duty rated, however, it is not recommended to run a NORD two speed motor with an AC vector drive.

Number of Poles	Synchronous Speed at 60Hz	Synchronous Speed at 50Hz	Notes:
Single Speed Motors			
4	1800 rpm	1500 rpm	–
2	3600 rpm	3000 rpm	–
6	1200 rpm	1000 rpm	–
Two Speed Motors			
4-2	1800/3600 rpm	1500/3000 rpm	Single winding
8-2	900/3600 rpm	750/3000 rpm	Two winding
8-4	900/1800 rpm	750/1500 rpm	Single winding

Other speeds available upon request.

MOTORS

Voltage and Frequency

NORD motors are available in a number of voltage and frequency options. All standard voltages are commonly available. Optional voltages may be provided, but may include an increase in price and an extended lead time. It also may be possible to provide motors with special voltages and frequency operation points.

Standard Voltages

Single speed motors	Two speed motors
230/460V-60Hz (up to 30 hp)	460V-60Hz
460V-60Hz (40 hp and larger)	230V-60Hz
575V-60Hz	575V-60Hz
400V-50Hz	400V-50Hz

Optional Voltages

Single speed motors	Two speed motors
208V-60Hz (up to 10 hp, not available in energy efficient design)	Other voltages & frequencies available upon request
380V-50Hz	
415V-50Hz	
380V-60Hz	
Other voltages & frequencies available upon request	

Voltage and Frequency Variation

Voltage and frequency variations are based upon the assumption that the nameplate horsepower will not be exceeded and that the motor temperature may increase. Standard allowable deviations are based upon the type of motor labeling.

NEMA and CSA Labeled Motors

Variations are based upon the nominal utilization voltage, and not the service (supply) voltage as per ANSI C84.1. Voltage and frequency tolerances follow the guidelines set forth in NEMA MG-1.

Service Voltages	Utilization Voltages
120V	115V
208V	200V
240V	230V
480V	460V
600V	575V

- Approved voltage variation at rated frequency is ±10%.
- Approved frequency variations at rated voltage is ±5%.
- Approved combined voltage/frequency variation = ±5%.

US and Canadian Standard (CUS)

CUS motor construction defines that NORD motors are constructed in accordance to UL 1004 (electric motors) and CSA C22.2 No. 100-04 (motors and generators) guidelines. This option is standard for 208, 230, 460, and 575 Volt operation at 60 Hz.

Motors nameplated with the CUS option will be marked and indicating that the Underwriters Laboratories and CSA have tested and approved NORD motors according to both US and Canadian standards.

CE Labeled Motors

Per IEC 60038, allowable service voltage variations on in the current system, compared to the previous system, are as indicated.

Previous Service Voltages	Current Service Voltages
220V, 380V, 660V	230V, 400V, 690V +6/-10%
240V, 415V	230V, 400V +10/-6%

- Per EN 60034-1, a ±5% voltage variation and a ±2% frequency variation can be tolerated.
- The allowed variations are based upon the voltage (or voltage range) indicated on the motor nameplate.

Send Quote Requests to info@automatedpt.com
Call +1(800)985-6929 To Order or Order Online At Nordgearmotors.com

Standard Design & Construction

Insulation Class

NORD motors are constructed with a thermal class F insulating system. Theses motors are also designed for a class B temperature rise of up to 80°C. The use of class F insulation with a class B temperature rise provides increased operating life. Motors constructed with class H insulation are also available as an option.

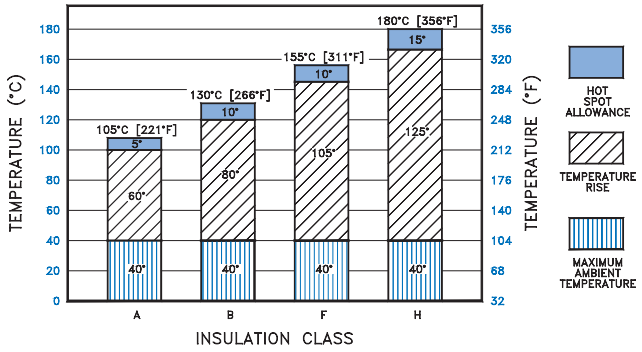

Ambient Temperature

NORD motors are designed to operate with a maximum ambient temperature of 40°C (104°F). If the motor's operating environment exceeds 40°C, the motor's nominal power P_n either needs to be de-rated (see table below) or use upgraded insulation.

Ambient temp [°F]	113	122	131	140
Ambient temp [°C]	45	50	55	60
De-rate factor	0.96	0.92	0.87	0.82

Motor Rated Power = [P_n x De-rate factor]

Elevation

NORD motors are designed to operate at an elevation of up to 3300 ft (1000 m) above sea level. At higher elevations the air is thinner resulting in less cooling capacity. If the motor's nominal power (P_n) installation elevation exceeds 3300 ft (1000 m), the motor's nominal power either needs to be de-rated (see table below) or requires upgraded insulation.

Altitude [ft]	5000	6500	8200	10000	11500	13000
Altitude [m]	1500	2000	2500	3000	3500	4000
De-rate Factor	0.97	0.94	0.90	0.86	0.83	0.80

Motor Rated Power = [P_n x De-rate factor]

Enclosure

The NORD standard motors are provided with Totally Enclosed Fan-Cooled (TEFC) with an IP55 enclosure rating. Other enclosures are available, including Totally Enclosed Non-Ventilated (TENV), Totally Enclosed Blower-Cooled (TEBC), and IP66.

The motor integral cooling fan provides proper air flow in either direction of rotation. The IEC cooling classification is IC 411 according to IEC 60034-6.

IP Enclosures per IEC 60034-5 - Simplified

	1st digit Foreign body protection		2nd digit Water protection
0	No protection	0	No Protection
1	Protected against solid objects 50mm (2 in) in diameter and larger	1	Protected against dripping water
2	Protected against solid objects 12 mm (1/2 in) in diameter and larger	2	Protected against dripping water up to a 15 degree angle
3	Protected against solid objects 2.5 mm (0.1 in) in diameter and larger	3	Protection against sprayed water
4	Protected against solid objects 1 mm (0.04 in) in diameter and larger	4	Protection against splashed water
5	Protected against dust	5	Protection against water jets
6	Dust tight	6	Protection against high pressure water jets
7	--	7	Protection against intermittent submersion in water
8	--	8	Protection against continuous submersion in water

MOTORS

Send Quote Requests to info@automatedpt.com
Call +1(800)985-6929 To Order or Order Online At Nordgearmotors.com

Standard Design & Construction

NORD DRIVESYSTEMS

MOTORS

Duty Classes

The following duty types are defined in IEC 60034-1.

Duty Type	Explanation Excerpts
S1	Continuous operation at a constant load, the motor reaches thermal equilibrium
S2	Short-time operation at a constant load for a given time followed by a time of rest until the motor is completely cooled down to ambient temperature. Example: S2-10 minutes Recommended values for determination: 10, 30 min.
S3	Sequential intermittent operation, identical run and rest cycles with a constant load. Temperature equilibrium is never reached. Starting current has little effect on temperature rise. The cyclic duration factor (cdf) indicates the portion of operation time in relation to a complete duty cycle. The typical duty cycle time is 10 minutes, unless otherwise specified. Example: S3-40% Recommended values for determination: 25, 40, 60%
S6	Continuous operation with intermittent load sequential, identical cycles of running with constant load and running with no load. No rest periods. Example: S6-40% Recommended values for determination: 25, 40, 60%

Power Increasing Factor for Short-term & Intermittent Operation

Motor ratings in this catalog are based on continuous duty operation (S1). If a motor is designed for S1 duty, but is to be operated for short-time or intermittent operation it can be subjected to higher loads. The available motor power can be raised above the motor rated power by the "increasing factor" in the table below.

Duty Type			Increasing factor
S2	Operating time	10 min	1.40
		30 min	1.15
S3	Cyclic duration factor (cdf)	25%	1.33
		40%	1.18
		60%	1.08
S6	Cyclic duration factor (cdf)	25%	1.45
		40%	1.35
		60%	1.15

Motor Rated Power = [P_n x Increasing factor]

Protective Features

All NORD Motors and Speed Reducers are constructed to provide a high degree of protection against wet and severe environments. NORD motors and speed reducers are sealed against moisture ingress and use corrosion and moisture resistant components. NORD has recently made many enhancements in the motor and gear units standard construction to provide improved environmental protection. Many of the standard protection features of the NORD units are only available at an additional cost from other motor and gear drive suppliers. NORD designs all gearmotors, speed reducers and motors for installation in harsh industrial, commercial and municipal installation environments.

Motors for Indoor Operation - Option Codes

	Dry Conditions	Wet or Humid Conditions
Ambient Temperature Fluctuation	–	KB, SH
Paint	–	NSD+
Vertical Motor Mount	RD	RDD

Motors for Outdoor Operation - Option Codes

	Sheltered from the Elements	Exposed to the Elements
Ambient Temperature Fluctuation	KB, SH	KB, SH, KKV
Paint	NSD+	NSDx3
Vertical Motor Mount	RD	RDD

Option Code Key

KB	Condensation Drain Holes - Plugged	Page 224
SH	Space Heater	Page 223
KKV	Terminal Box Sealed with Resin	Page 224
NSD+	NORD Severe Duty Paint	Page 34
NSDx3	NORD Severe Extreme Duty X3 Paint	Page 34
NSD^{tuph}	Tuph Sealed Surface Conversion	Page 35
RD	Canopy Drip Cover	Page 224
RDD	Double Fan Cover	Page 224

Send Quote Requests to info@automatedpt.com
Call +1(800)985-6929 To Order or Order Online At Nordgearmotors.com

General Options

Motor Options & Construction

NORD motors are stocked in one of two ways. The first method is to stock a complete motor that is ready to be assembled to a gear reducer or shipped as a stand alone motor. The second method, the motor is assembled from component parts. The Mod next to a motor option designates that the option can be added to a complete motor by simple modification. The Build next to a motor option indicates that the motor will need to be built from component parts in order to incorporate the motor option.

Motor Options

Abbreviation	Description	Mod	Build	Page
AG	Absolute Encoder		✓	232
AICM	Additional Insulation		✓	224
ECR	Single Phase Motors, 60Hz		✓	223
EKK	Small Terminal Box	✓		228
EP	Epoxy Dipped Windings		✓	224
F	Blower Cooling Fan	✓		225
FC	Blower Cooling Fan	✓		225
HR	Hand Wheel		✓	226
IG...P	Incremental Encoder		✓	231
ISO H	Class H Insulation		✓	223
KB	Plugged Condensation Drain Holes		✓	224
KBO	Open Condensation Drain Holes		✓	224
KKV	Terminal Box Sealed with Resin	✓		224
MG	Magnetic Encoder			230
MS	Quick Power Plug Connector	✓		228
OL	Totally Enclosed Non-Ventilated	✓		226
OL/H	Totally Enclosed Non Ventilated without Fan Cover		✓	226
RD	Canopy Drip Cover	✓		224
RDD	Double Fan Cover	✓		224
RLS	Motor Backstop		✓	227
SH	Space Heater		✓	223
TF	Thermistor		✓	222
TW	Thermostat		✓	222
WE	2nd Shaft Extension on Fan Side		✓	226
WU	High Resistance Rotor		✓	223
Z	High Inertia Cast Iron Fan		✓	227
-	IP65 Enclosure Protection	✓		224
-	IP66 Enclosure Protection	✓		224
-	Paint Coatings	✓		34

Send Quote Requests to info@automatedpt.com
Call +1(800)985-6929 To Order or Order Online At Nordgearmotors.com

Send Quote Requests to info@automatedpt.com
Call +1(800)985-6929 To Order or Order Online At Nordgearmotors.com

General Options

NORD DRIVESYSTEMS

Motor Protection

Selecting appropriate motor protection is a key factor in reliable motor operation. There are two common classes of motor protection; current based and temperature based. Electrical installation codes require at least two types of protection in the motor circuit, both of which are normally current based. First is short-circuit protection, normally accomplished by fuses or circuit breakers. The Second is "motor overload protection" and is normally a device called a "motor overload" or a "heater." Current based protection is effective in some conditions. NORD can provide two different types of motor temperature based protection, a PTC thermistor (TF) or a bi-metallic thermostat (TW). Temperature based protection is more effective motor protection in many situations, this is explained in the table below.

⬆ = Good protection ⟷ = Limited protection ⬇ = No protection	Fuses	Motor Overloads	PTC Thermistor (TF)	Bi-metallic Switch (TW)
Over current up to 200%	⬇	⬆	⬆	⬆
High inertia starting	⬇	⟷	⬆	⟷
Frequent motor starts	⬇	⟷	⬆	⬆
Stalling	⟷	⟷	⟷	⟷
Single phasing	⬇	⟷	⬆	⬆
Supply voltage deviations	⬇	⬆	⬆	⬆
Supply frequency deviations	⬇	⬆	⬆	⬆
Inadequate motor cooling	⬇	⬇	⬆	⬆
Bearing Damage	⬇	⬇	⬆	⬆

MOTORS

Thermostats (TW & 2TW)

Build

Motor thermostats or bi-metallic switches can be wired directly into the control circuit without a separate control module or tripping device. Thermostats operate on a relatively high control voltage so they are much less sensitive to voltage interference from the main power supply. One may often run thermostat leads and motor power leads next to each other when using the appropriate shielded cable. The installer is responsible for wiring the thermostats onto the motor control circuit. The leads may be labeled in a variety of ways as indicated.

Standard connection	Series connected, one per phase
Contact	NC (Normally Closed)/ Auto Re-setting
Response Temperature (Option TW)	311 °F (155 °C) Shut-Off Device
Response Temperature (Option 2TW)	311 °F (155 °C) Shut-Off Device + 266°F (130 °C) Alarm Device
Nominal Current	1.6 Amp at 250 V
Resistance	< 50 mΩ
Switch Rebound	< 1ms
Insulation Rating	2000 VAC
Cycles	10,000 max
Lead Identification (inside terminal box)	P1 and P2 or TB1 and TB2 / 2TB1 and 2TB2

Thermistors (TF)

Build

With a separate control module or tripping device (ex. Kirwan INT69) thermistors are used to sense overload and temperature conditions by converting the critical operating temperature limit into internal resistance changes. Due to their small size, heat sink construction, and high change in resistance value, minor resistance variations caused by relatively long lead runs may be tolerated. This feature also allows for one controller to be used for several temperature sensing locations. Many variable frequency drives come with on-board thermistor inputs. NORD does not supply the thermistor control module.

Standard Connection	Three devices, series connected, one per phase
Type	Positive temperature coefficient (PTC)
Transition Temperature	150°C±5 °C
Resistance	20… 500Ω (below transition) > 4 kΩ (above transition)
Reed Current	< 1mA
Max Voltage	30V
Lead Identification (inside terminal box)	P1 and P2 or TP1 and TP2

WARNING

- Thermostats and Thermistors will automatically reset.
- All wiring must be completed by qualified personal and adhere to all local installation codes.

Send Quote Requests to info@automatedpt.com
Call +1(800)985-6929 To Order or Order Online At Nordgearmotors.com

Send Quote Requests to info@automatedpt.com Call +1(800)985-6929 To Order or Order Online At Nordgearmotors.com

General Options

Space Heater (SH)

Build

Motors subjected to extreme temperature fluctuations or severe climatic conditions can be damaged by the formation of condensation. NORD can provide anti-condensation space heaters inside the motor to heat up the windings when the motor is not operating. This will prevent moisture from forming inside the motor. The space heaters must not be switched on while the motor is running.

Space Heater Voltage Must be specified

Voltages available
❍ 115V – 50/60Hz
❍ 230V – 50/60Hz
❍ 460V – 50/60Hz
❍ other voltages available on request

Class H Insulation (ISO H)

Build

NORD motors can be manufactured with a class H insulation system. Standard NORD motors include double coated magnetic wire windings. When these windings are paired with a class H insulation it provides extra temperature capacity for the motor and will increase the motor's life. Class H insulation rated motors are also an advantage in some severe applications such as:

- Increased ambient temperature installations above 40°C (104°F)
- Increased elevation installations – above 3300 ft (1000 m)
- Applications with a high number of starts per hour.
- A lower operating frequency such as when used with an AC vector drive
- For additional information on insulation class see page 219.

High Resistance Rotor (WU)

Build

Using Silumin rotor material, NORD offers a high resistance rotor to soften the motors operation and allow higher overload torques.

Single Phase Motors, 60Hz (ECR)

Build

The ECR series of single phase motors is intended for demanding operation at 60Hz with a supply voltage of 115V or 230V. The permissible voltage range is 115/230V +/- 10%. The ECR motors have a 1.15 service factor and are available from 0.16 - 2 hp.

MOTORS

Send Quote Requests to info@automatedpt.com
Call +1(800)985-6929 To Order or Order Online At Nordgearmotors.com

Environmental Options

NORD DRIVESYSTEMS

Paint Coatings

Mod

NORD's standard paint coating is a two component, aliphatic polyurethane finish contaning 316 stainless steel material. This gray stainless steel paint has excellent appearance and outstanding physical properties. It is suitable for both indoor and outdoor applications. For more information and an explanation of all of our paint options please see page 34.

Condensation Drain Holes

NORD motors can be equipped with condensation drain holes. These drain holes are placed in the motor endbells at the lowest possible point. The drain holes are closed at the factory with plastic snap in plugs. They allow for condensation accumulation in the motor to drain after the closing plugs are removed.

The motor drain holes can be provided by NORD either open (KBO) or sealed with a closing plug (KB).

IMPORTANT NOTE

The motor must be installed in the mounting orientation specified on the nameplate or the drain holes will not function properly and may result with the motor filling with water.

Condensation Drain Holes, Plugged (KB)

Build

KB drain holes are plugged for shipment. In order for the holes to effectively drain moisture, the plugs must be removed before using the motor.

Condensation Drain Holes, Open (KBO)

Build

KBO drain holes are shipped open (not plugged).

IP65 Enclosure Protection

Mod

NORD motors can be provided with an IP65 enclosure protection. IP65 protection is suitable for wet, low-pressure wash down and extremely dusty environments.

IP	1st digit Foreign body protection	IP	2nd digit Water protection
6	Dust tight	5	Protection against water jets

IP66 Enclosure Protection

Mod

NORD motors can be provided with an IP66 enclosure protection. IP66 protection is suitable for wet, high-pressure wash down and extremely dusty environments, and includes all requirements included in IP65 enclosure protection.

IP	1st digit Foreign body protection	IP	2nd digit Water protection
6	Dust tight	6	Protection against high pressure water jets

Terminal Box Sealed with Resin (KKV)

Mod

Terminal boxes may be sealed with a flexible, electrically safe resin to ensure that contaminants, water, and moisture cannot pass through the terminal box into the stator body. This option is helpful in extremely dusty, wet and humid environments. Another environment where this option is helpful is in installations that have frequent large temperature swings where condensation may form.

Additional Insulation (AICM)

Build

NORD can provide additional insulation inside the motor to provide additional electrical protection in extremely wet or corrosive environments. An electrically safe insulating material is coated internally in the stator windings and on the rotor body.

Epoxy Dipped Windings (EP)

Build

In extremely wet environments, the motor windings are dipped in epoxy for improved moisture protection. The motor can also be treated with the standard NORD Severe Duty + (NSD+) package for an even higher degree of protection.

Canopy Drip Cover (RD)

Mod

For wet or dirty installations where the fan end of the motor is mounted up, NORD offers a canopy drip cover to block this falling water or debris, thus forcing water or debris to repel from the motor's fan guard, .

Double Fan Cover (RDD)

Mod

For wet or dirty installations where the fan end of the motor is mounted up, the NORD Double Fan Cover provides protection against falling or wind blown water, snow, dirt or debris from entering the back of the motor.

MOTORS

Send Quote Requests to info@automatedpt.com
Call +1(800)985-6929 To Order or Order Online At Nordgearmotors.com

AC Vector Drive Related Options

Blower Cooling Fan (F & FC)

Mod

NORD offers continuous running motor mounted cooling fans that provide motor cooling at low motor speeds. When a motor is operated on an AC vector drive at low frequency, standard rotor fans do not provide adequate airflow for cooling. NORD's separate powered motor cooling fans provide that necessary airflow. These separately powered fans replace the standard motor fan and its cover.

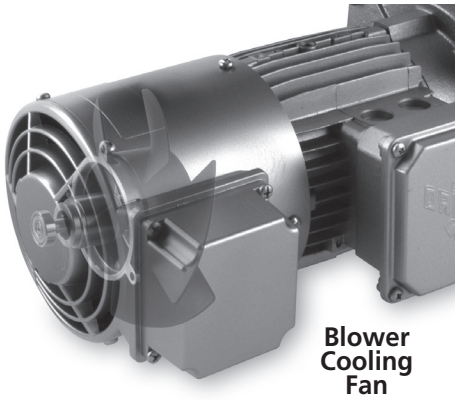

Blower Cooling Fan

Option F – 3ph & 1ph 220-575V 50/60Hz

Motor Frame	60Hz Ratings			50Hz Ratings		
	Voltage [V]	Current [A]	Power [W]	Voltage [V]	Current [A]	Power [W]
Single phase connection - ⊥ (Delta)						
63	230 – 277	0.11	38	230 – 277	0.10	27
71	230 – 277	0.12	41	230 – 277	0.10	28
80	230 – 277	0.13	44	230 – 277	0.11	29
90	230 – 277	0.25	88	230 – 277	0.26	72
100	230 – 277	0.28	88	230 – 277	0.26	70
112	230 – 277	0.31	107	230 – 277	0.26	73
132	230 – 277	0.27	89	230 – 277	0.29	82
160 - 225	230 – 277	0.41	140	230 – 277	0.45	128
Three phase low-voltage connection - ⊥ (Delta)						
63	220 – 332	0.08	23	220 – 290	0.10	27
71	220 – 332	0.08	24	220 – 290	0.10	30
80	220 – 332	0.08	25	220 – 290	0.10	29
90	220 – 332	0.21	64	220 – 290	0.28	86
100	220 – 332	0.21	66	220 – 290	0.27	86
112	220 – 332	0.23	70	220 – 290	0.27	85
132	220 – 332	0.25	74	220 – 290	0.32	96
160 - 225	220 – 322	0.49	165	220 – 290	0.52	155
Three phase high-voltage connection - (Y)						
63	380 – 575	0.04	23	380 – 500	0.05	29
71	380 – 575	0.04	25	380 – 500	0.05	30
80	380 – 575	0.04	26	380 – 500	0.05	29
90	380 – 575	0.12	62	380 – 500	0.16	82
100	380 – 575	0.12	66	380 – 500	0.16	83
112	380 – 575	0.13	70	380 – 500	0.16	82
132	380 – 575	0.14	75	380 – 500	0.18	96
160 - 225	380 – 575	0.28	165	380 – 500	0.29	155

Option FC – 115V 50/60Hz 1ph

Motor Frame	60Hz Ratings			50Hz Ratings		
	Voltage [V]	Current [A]	Power [W]	Voltage [V]	Current [A]	Power [W]
Single Phase Connection - ⊥ (Delta)						
63	100 – 135	0.23	42	100 – 135	0.30	42
71	100 – 135	0.23	47	100 – 135	0.30	44
80	100 – 135	0.27	57	100 – 135	0.30	43
90	100 – 135	0.46	102	100 – 135	0.57	78
100	100 – 135	0.53	105	100 – 135	0.54	78
112	100 – 135	0.60	115	100 – 135	0.55	80

Send Quote Requests to info@automatedpt.com
Call +1(800)985-6929 To Order or Order Online At Nordgearmotors.com

Send Quote Requests to info@automatedpt.com
Call +1(800)985-6929 To Order or Order Online At Nordgearmotors.com

Additional Options

Totally Enclosed Non-Ventilated (OL) Mod

NORD can provide totally enclosed non-ventilated (TENV) motor enclosure. TENV motors provide benefits in certain operating environments; such as extremely dusty or dirty applications, where cooling fans may have material accumulation, which can be detrimental to the motor and the application. The OL series of motors are the standard fan cooled motor construction including the fan cover, but provided without the fan. TENV motors can also be used to reduce cooling fan noise on a standard motor.

A TENV motor's frame size is larger then a totally enclosed fan cooled (TEFC) motor. For intermittent operation, a TENV motor can be operated at a 50% duty cycle at full rated power.

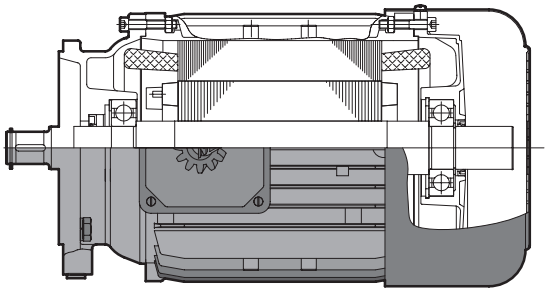

Totally Enclosed Non-Ventilated, without Fan Cover (OL/H) Build

The OL/H series of TENV motors are more compact in space than the OL series. They do not include the rotor shaft extension through the back bearing end bell or the fan cover.

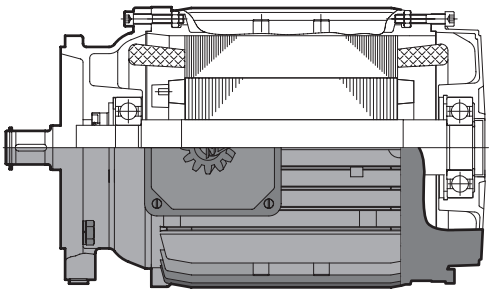

2nd Shaft Extension on Fan Side (WE) Build

NORD can provide a second shaft extension on the fan side of the motor that protrudes through the fan cover. This extension can be used as a power take-off or to mount customer supplied devices such as encoders and tachometers.

The shaft extension can be provided on motors with and without brakes. The shaft extension can not be used on motors with blower fans (F) or (FC). For dimensions see pages 260 - 266.

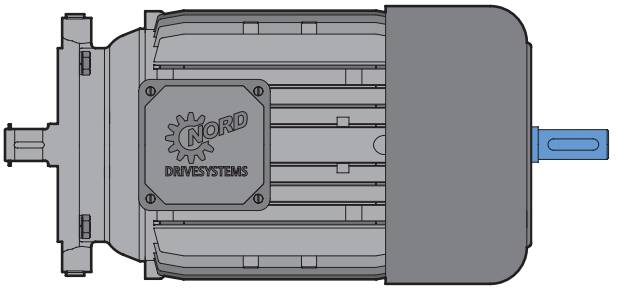

Hand Wheel (HR) Build

Motors can be supplied with a hand wheel that is located on the second shaft extension. The hand wheel can be used for manual operation during power outages, or for machine positioning setup. This option is not available on NEMA dimensioned motors. For dimensions see pages 260 - 266.

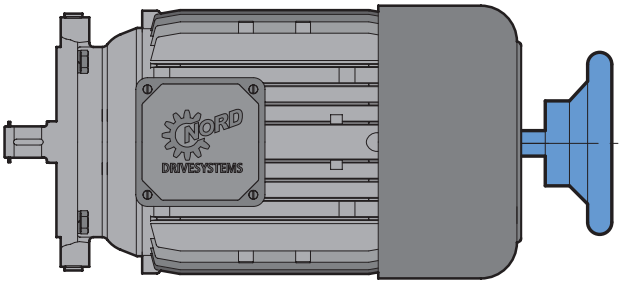

WARNING

The customer is required to provide appropriate safety guarding for the rotating hand wheel.

Send Quote Requests to info@automatedpt.com
Call +1(800)985-6929 To Order or Order Online At Nordgearmotors.com

Additional Options

High Inertia Cast Iron Fan (Z)

Build

An optional cast iron motor cooling fan is available. This fan is used as a mechanical soft start and/or soft stop. This fan adds inertia to the motor. The high inertia fan can also be used for a flywheel effect to store mechanical energy. This can be helpful in smoothing rapid load changes. The cast iron fan replaces the standard plastic motor fan. The motor length is the same as a brakemotor.

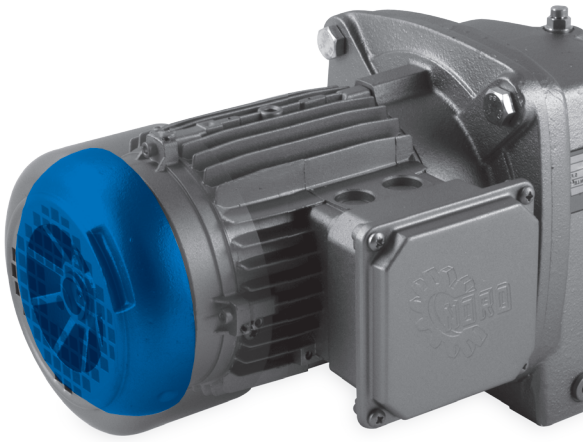

Motor Frame	Fan Inertia J_z[lb-ft²]
71	0.0475
80	0.1140
90	0.2375
100	0.2684
112	0.5653

MOTORS

Motor Backstop (RLS)

Build

NORD can provide backstops on many motor frames. A backstop will prevent the motor from rotating in one direction. A common use is to prevent a motor from allowing a load to move backwards when power is removed. A motor brake is an alternative that may be used for this same purpose. A backstop adds additional length to the motor. For the motor length extension, see the table below.

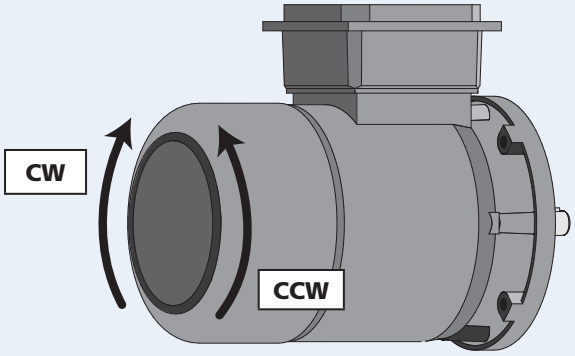

The allowable direction of rotation must be specified in the order.

Allowable Shaft Rotation
❍ Clockwise - Back of Motor
❍ Counter Clockwise - Back of Motor

Motor Size	Backstop Torque [lb-in]	Minimum Speed [rpm]	Motor Extension [in]
80S/L	1150	860	2.52
90S/L	1150	860	2.95
100L	1150	860	3.58
112M	3270	750	3.66
132S/M	3270	750	4.21
160M/L	7880	670	6.57
180MX/LX	7880	670	6.73
200L	9120	630	6.57
225S/M	9120	630	6.57
250M	22130	400	9.84
280S/M	51330	320	11.02

For all motor dimensions please see pages 260 - 266.

Send Quote Requests to info@automatedpt.com
Call +1(800)985-6929 To Order or Order Online At Nordgearmotors.com

Send Quote Requests to info@automatedpt.com
Call +1(800)985-6929 To Order or Order Online At Nordgearmotors.com

Additional Options

NORD DRIVESYSTEMS

Quick Power Plug Connector (MS)

Mod

The quick power plug connector (MS) is a simple and fast way to connect and disconnect a motor or brake motor. The MS connector is available on NORD three-phase motors from frame size 63 to 132. The motor connections are made by a modular power plug manfacturer by Harting. After the first installation, the motor can be quickly changed by simply plugging and unplugging the electrical connections. This will ensure the new motor is properly wired. This is a significant advantage to equipment builders who fabricate machinery on site and then ship to another location. The motor with the MS connector can simply be plugged in during final installation.

NORD supplies the male connector half mounted on the motor conduit box. The customer must supply the female connector half mounted on the power wiring. NORD supplies a protective plastic cover on the motor male connector half to protect from dirt and damage prior to installation.

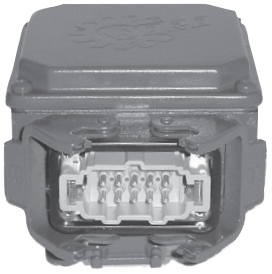

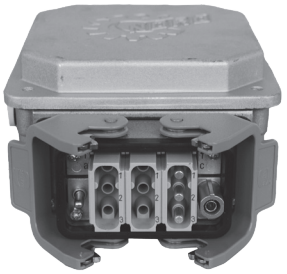

Advantages:

- Simple motor wiring
- Accurate wiring of motor at final job site
- Fast motor replacement
- Accurate wiring of replacement motor
- Ideal for portable equipment
- Reduces the required personnel for motor replacement
- Faster motor changes reduce down time

Plug ratings:

Manufacturer	Harting	
Connector	HAN 10 ES/HAN 10ESS	HAN 10 C-Modular
	Cage Clamp Connectors	
Number of Pins	10-Male	9-Male
Voltage	600VAC per UL/CSA	690VAC per UL/CSA
Current	16A - Continuous	40A - Continuous

Quick Power Plug Kits:

Includes conduit box, mounting hardware & Male Harting Motor Plug

P/N	Motor size
11035350	63 + 71
13035350	80 + 90 + 100
16035350	112

Power Plug Positions

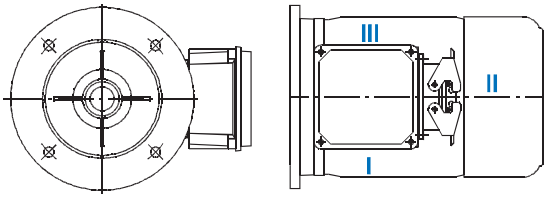

Power plug position must be specified

Power Plug Position
❍ I ❍ II ❍ III

Small Terminal Box (EKK)

Mod

The motor terminal box can be provided as a smaller, one-piece terminal design. This option is valid for standard motors 0.16 - 10 hp (frame size 63-132) and is not available for Brakemotors.

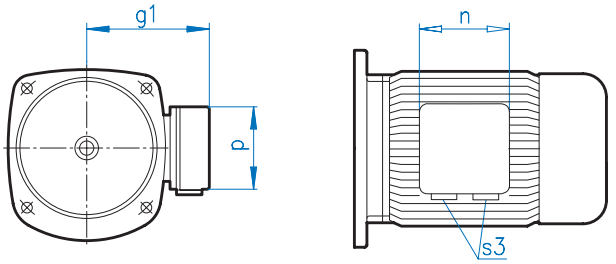

EKK Dimensions				
Motor Frame	g1	n	p	S3
63	3.94	2.95	2.95	2x M16 x 1.5
71	4.29	2.95	2.95	2x M16 x 1.5
80	4.88	3.62	3.62	2x M20 x 1.5
90	5.08	3.62	3.62	2x M20 x 1.5
100	5.51	3.62	3.62	2x M20 x 1.5
112	5.91	3.62	3.62	2x M20 x 1.5

Send Quote Requests to info@automatedpt.com
Call +1(800)985-6929 To Order or Order Online At Nordgearmotors.com

Send Quote Requests to info@automatedpt.com
Call +1(800)985-6929 To Order or Order Online At Nordgearmotors.com

Encoder Options

Encoder Overview

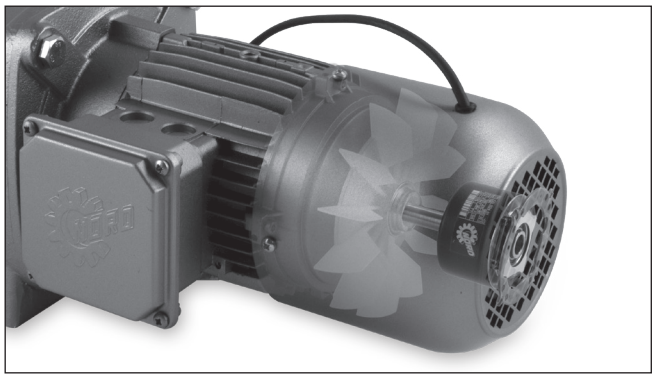

In many of today's drive applications encoders are needed when it necessary to monitor travel distance, position, or speed. Encoders use integrated electronics to convert sensor detected signals into a digital output format that is easily interfaced with programmable logic controllers (PLC's) and computers.

NORD offers a variety of encoder solutions that will satisfy almost any application. NORD will also work closely with our customers to satisfy many specific encoder requirements or meet specifications for a variety of protocols.

Incremental Encoders

Incremental encoders can be used to monitor position or speed. Position is determined by counting pulses from a zero mark or home position. Speed or velocity data is generated by looking at the time interval between pulses or the number of pulses within a given time period

With incremental encoders it is necessary to re-initialize the system and return the system to the home position in the event of a power loss.

The following pages are an explanation of the types of incremental encoders that NORD offers.

Magnetic Encoders vs. Optical Encoders

Magnetic Encoders use a magnetized wheel spinning in relationship to a fixed magneto-resistive sensor. The wheel causes predictable responses in the sensor, based on the strength of the magnetic field.

Optical Encoders use a spinning disk and a mask. The mask lets light pass through in predictable patterns for interpretation by a photo-electric sensor. In both cases the sensor produces a digital output format that is easily interfaced by the PLC or computer.

- Magnetic Incremental Encoder (Page 230)
- Optical Incremental Encoders (Page 231).

Types of Common Pulse Signals

Incremental encoders can provide different pulse signals for each full rotation of the encoder.

Quadrature pulse signals are represented by two encoder output signals (A & B channel) phased 90° electrically apart; these signals help determine direction of rotation by monitoring the phase relationship between the two channels.

Differential signals are complimentary or mirror image [high (A & B) and low (A & B)] output signals that are generated in order to greatly reduce the encoder's susceptibility to electrical interference or noise. When noise occurs during a given pulse, a mirror image does not result and that small portion of the total signal can be ignored.

A Marker Pulse or Index signal (Z channel) can be provided as one pulse per revolution signal for pulse count verification on the A and/or B channels. This pulse is sometimes used for error detection or re-homing the system after a power failure or fault condition.

Absolute Encoders

Absolute encoders use a disc system with digital coding on concentric tracks. A unique pattern is assigned to every position. True position verification and reference to home is maintained offering optimal recovery from system and/or power failures. Absolute encoder's also come in a variety of output protocols or interfaces. Additional incremental tracks are often specified to provide speed control along with accurate position monitoring.

- Absolute Encoders (Page 232).
- Absolute Encoders for NORD Vector Drives (Page 233).

Send Quote Requests to info@automatedpt.com
Call +1(800)985-6929 To Order or Order Online At Nordgearmotors.com

Send Quote Requests to info@automatedpt.com Call +1(800)985-6929 To Order or Order Online At Nordgearmotors.com

Encoder Options

NORD DRIVESYSTEMS

Magnetic-Incremental Encoder (MG)

NORD offers a competitively priced magnetic encoder that is easily adaptable to the 63 to 180 frame NORD motors. The magnetic encoder utilizes a special screw installed to the motor's rotor shaft in order to create a permanent rotating magnetic field.

A small 0.78 inch (20 mm) sensor pick-up is mounted to the back of the motor fan shroud. The sensor converts the changing magnetic fields into HTL, push-pull output signals that can be read by a PLC or computer. Quadrature (2 channels, A and B) output signals are phased electrically apart by 90° in order to help determine the direction of rotation by monitoring the phase relationship between the two channels. Our design enables the encoder's implementation near the vicinity of our electric brakes.

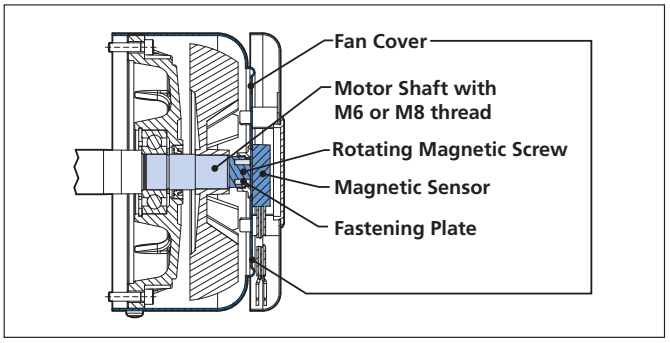

Advantages

- Cost effective, compact, and easy to mount (63– 180 frame motors).
- Minimal dimensional change to back of motor (page 192).
- Non-contacting measuring method using magnetics.
- Accurate resolution, vibration and shock resistancy in order to increase durability.

Technical Data	
Interface	HTL (push-pull) / Quadrature
Supply Voltage	10-30 VDC
Current	40 mA Max / < 30 mA (no load)
Pulse Count	1 PPR, 32 PPR or 512 PPR
Speed Range	0-5000 rpm
Protection Class	IP 68
Temp.	-4 to 212°F (-20 to 100°C)

Wire Color	Designation
Red	(+) Supply Voltage
Black	(-) Supply Voltage
Brown	Channel A
Orange	Channel B
Cable Size	ø0.19 in x 39 in Lg
Wires	4 x ø0.013 in^2
Gauge	22 AWG

Pulse Count	Connection Options (Supplier)
01 = 1 PPR	**O** = Open-end cable
20 = 32 PPR	**M** = M12 motor terminal box plug (Lumberg Automation P/N RSFM4/0.5M)
50 = 512 PPR	**N** = M12 male plug connector (Lumberg Automation P/N RSC4/9)
	V = Coupling connector (Phoenix Contact, Quickon P/N 1641879)

Connector Wiring				
M12 Connectors (Option M or N)		Coupling Connector (Option V)		
Pin	Wire Color	Pin	Wire Color	Designation
1	Brown	1	Red	(+) Supply Voltage
2	White	2	Brown	Channel A
3	Blue	3	Orange	Channel B
4	Black	4	Black	(-) Supply Voltage

Ordering Example

Encoder Type: MG - Pulse Count - Option

MG – 50 – M

- **M12 Connector Plug**
- **512 PPR (pulses per revolution)**
- **Magnetic Encoder**

A Magnetic HTL encoder, with a 256 pulse count that is connected by a M12 connector

MOTORS

Send Quote Requests to info@automatedpt.com
Call +1(800)985-6929 To Order or Order Online At Nordgearmotors.com

NORD DRIVESYSTEMS

Encoder Options

Optical-Incremental Encoder (IG..P)

Build

NORD offers optical incremental encoders to monitor position or speed. These encoders are typically mounted to the back side of the electric motor shaft. Common interface logic types include: TTL, HTL and Line Driver. NORD will also work closely with our customers to provide specified encoder pulse counts or control logic.

Optical incremental encoders pass light from a light emitting diode (LED) through a partially masked rotating code disc onto a photo-electric receiver. The receiver converts light pulse signals into a square wave digital output format that is easily interfaced by programmable logic controllers (PLC's) and computers.

With optical incremental encoders it is necessary to re-initialize the system and return the system to the home position in the event of power loss.

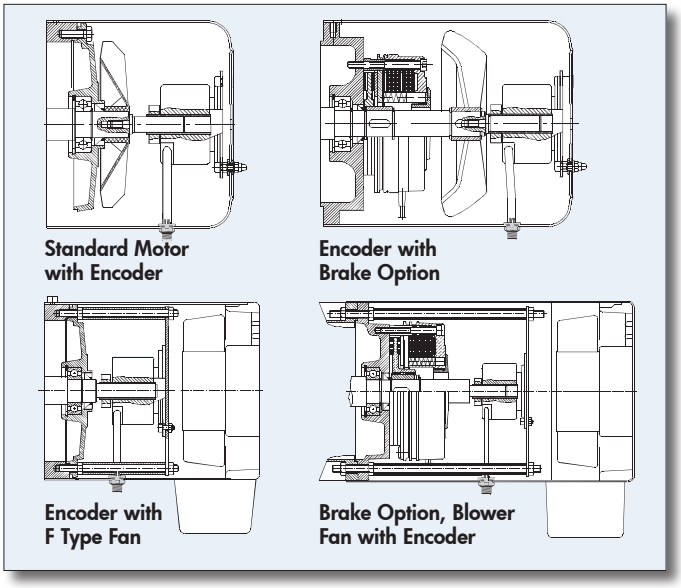

Advantages

- Quadrature, differential and marker pulse output signals
- Accurate resolution up to 5000 ppr.
- Sturdy double bearing design offers high tolerance to shock and vibration.
- Short-circuit proof outputs and reverse connection protection.
- M12 (8-pin) male plug fixed to motor fan cover for easy wiring and adaptability.

M12 Connecter	Pin	Color	Signal
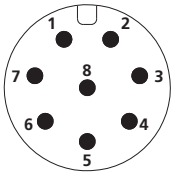	1	0V	WH
	2	+V	BN
	3	A	GN
	4	A\	YE
	5	B	GY
	6	B\	PK
	7	Z	BU
	8	Z\	RD

NORD Type	IG1 P	IG2 P	IG4 P	IG11 P	IG21 P	IG41 P	IG12 P	IG22 P	IG42 P	IG13 P	IG23 P	IG43 P
Part Number	19551500	19551510	19551520	19551502	19551512	19551522	19551501	19551511	19551521	19551503	19551513	19551523
Interface	TTL/RS422 (26C31)			TTL/RS422 (26C31)			HTL/Push-pull (IC-WE)			Line Driver (7272)		
Logic [VDC]	5			5			10-30			5-30		
Pulse Count [PPR]	1024	2048	4096	1024	2048	4096	1024	2048	4096	1024	2048	4096
Power Supply [VDC]	4-6	4-6	4-6	10-30	10-30	10-30	10-30	10-30	10-30	5-30	5-30	5-30
Max Current Draw [mA]	100						150					
Max Frequency [kHz]	300											
Temperature Range	-4°F to176°F (-20°C to 80°C)											
IP Rating	IP66											
Cable	M12 8-pin male plug											

Pre-fabricated Encoder Cables

NORD can provide Turck pre-fabricated encoder molded cordsets (M12, 8-pin, shielded, twisted pair)

Length	In-line		Right-angle	
	NORD P/N	Turck P/N	NORD P/N	Turck P/N
2m	19551580	E-RKC 8T-264-2	19551584	E-WKC 8T-264-2
5m	19551581	E-RKC 8T-264-5	19551585	E-WKC 8T-264-5
10m	19551582	E-RKC 8T-264-10	19551586	E-WKC 8T-264-10
15m	19551583	E-RKC 8T-264-15	19551587	E-WKC 8T-264-15
Field Wireable Connector	19551588	CMB 8181-0	-	-
Custom	order from Turck	E-RKC 8T-264-*	order from Turck	E-WKC 8T-264-*

- The above encoder cables are provided with the shielding NOT connected thru the plug nut
- Providing a conducting path thru the cable nut and attaching the shield to ground on both ends of the cable is a possible source of electrical noise

Send Quote Requests to info@automatedpt.com
Call +1(800)985-6929 To Order or Order Online At Nordgearmotors.com

Encoder Options

NORD DRIVESYSTEMS

Absolute Encoder (AG)

Absolute encoders do not lose position or home-position reference when power is removed. Absolute encoders provide a higher degree of safety than when using incremental encoders in applications where a loss of position could result in damage to the machinery or injury to the operator.

NORD absolute encoders are available with different data protocols or interfaces and many cases they can also be supplied with optional incremental tracks to provide accurate position and speed sensing feedback. We will also work closely with our customers to meet the specifications of the equipment builder or systems integrator.

NORD typically provides multi-turn absolute encoders mounted to the back side of the electric motor shaft. Multi-turn encoders provide turns counting in applications involving more than one revolution of the encoder shaft. Single-turn encoders can also be supplied and they are best suited for short travel, motion control applications where position verification is required within a single turn of the encoder shaft.

MOTORS

Turck Absolute Encoders (AG)

Turck Type	T8.F3683	T8.F3668	T8.5860	T8.5883
Interface	SSI or BiSS-C® ❷	CANopen® ❷	DeviceNet™ ❶	SSI or BiSS-C®
Supply Voltage	5 VDC or 10-30 VDC	10-30 VDC	10-30 VDC	5 VDC or 10-30 VDC
Single-turn Resolution	10, 12-14 & 17 bit	13 bit (default) 16 bit (max.)	13 bit	10-14 & 17 bit
Multi-turn Resolution	12, 16 or 24 bit	12 bit	12 bit	12 bit
Incremental Options	TTL/RS 422 (2048 PPR) or SinCos (2048 PPR)	None	None	TTL/RS 422 (2048 PPR) or SinCos (2048 PPR)
Shaft Version	Ø 8 mm hollow shaft	Ø 8 x 14.5 mm blind hollow shaft	Ø 12 x 30 mm blind hollow shaft	Ø 12 mm hollow shaft
Temperature Range	-40 to +194 °F (-40 to +90 °C)	-40 to +185 °F (-40 to +85 °C)	-4 to +176 °F (-20 to +80 °C)	-22 to +167 °F (-30 to +75 °C)
IP Rating	IP 67	IP 67	IP 67	IP 67

Turck Type	T8.5888	T8.5888	T8.5888	T8.5888
Interface	CANopen® ❷ & ❸	EtherCAT®	PROFIBUS® ❹	PROFINET®
Supply Voltage	10-30 VDC	10-30 VDC	10-30 VDC	10-30 VDC
Single-turn Resolution	13 bit (default) 16 bit (max.)	13 bit (default) 16 bit (max.)	13 bit (default) 16 bit (max.)	13 bit (default) 16 bit (max.)
Multi-turn Resolution	12 bit	12 bit	12 bit	12 bit
Incremental Options	TTL/RS 422 (2048 PPR)	None	None	None
Shaft Version	Ø 12 mm hollow shaft	Ø 12 x 30 mm blind hollow shaft	Ø 12 x 30 mm blind hollow shaft	Ø 12 x 30 mm blind hollow shaft
Temperature Range	-22 to +167 °F (-30 to +75 °C)	-40 to +176 °F (-40 to +80 °C)	-40 to +176 °F (-40 to +80 °C)	-40 to +185 °F (-40 to +85 °C)
IP Rating	IP 67	IP67	IP67	IP67

❶ *DeviceNet™ encoders are subject to magnet interference due to the hall-effect sensors used.*
❷ *Device specific CANopen® profile DS406 V3.2 is also available.*
❸ *CANopen® Lift© profile DS417 V1.1 is also available.*
❹ *Linedriver / RS485 is functionally integrated.*

BiSS® is a registered trademark of iC-Haus GmbH.
CANopen® is a registered trademark of the Controller Area Network (CAN) automation user's group.
CANopen® Lift© is copyright protected by the CAN in Automation (CiA) users group that specified the CANopen® application profile.
DeviceNet™ is a trademark of the Open DeviceNet Vendor Association, Inc. (ODVA).
EtherCAT® is a registered trademark of the EtherCat Technolgy Group (donated by Beckhoff Automation GmbH).
EtherNET was a trademark of Xerox Corporation, which relinquished the trademark when it was standardized by 95 IEEE 802.3.
PROFIBUS-DP® is a registered trademark of PROFIBUS User Organization and PROFIBUS International.
PROFINET® is a registered trademark of PROFIBUS and PROFINET International (PI).

Send Quote Requests to info@automatedpt.com
Call +1(800)985-6929 To Order or Order Online At Nordgearmotors.com

Send Quote Requests to info@automatedpt.com Call +1(800)985-6929 To Order or Order Online At Nordgearmotors.com

Encoder Options

Absolute Encoder (AG) - For AC Vector Drives

Many NORD AC variable frequency drives have an on-board CANopen® interface allowing the user to implement vector-drive position control.

The encoders listed in the table below communicate using CANopen® profile DS406 V3.2; device specific add-ons allow parameterization of the absolute encoder directly from the NORD frequency inverter.

The table indicates which encoder options contain incremental tracks so that speed control can also be monitored, which is necessary when speed control is required in addition to positive control.

Consult the appropriate NORD user manuals for frequency drive and encoder wiring. Also consult the encoder manufacture's documentation for the encoder terminal assignments.

Absolute Encoders (AG) - For NORD AC Variable Frequency Inverters

Turck Type (NORD P/N)	T8.5888 (19551883)	T8.5888 (19551891)	T8.5888 (19551881)	T8.5888 (19551886)
NORD AC VFD Type	SK2xxE, SK53xE	SK53xE	SK53xE	SK2xxE
Interface	CANopen® profile DS406 V3.2 ❶	CANopen® profile DS406 V3.2 ❶	CANopen® profile DS406 V3.2 ❶	CANopen® profile DS406 V3.2 ❶
Supply Voltage	10-30 VDC	10-30 VDC	10-30 VDC	10-30 VDC
Single-turn Resolution	13 bit (8192)	13 bit (8192)	13 bit (8192)	13 bit (8192)
Multi-turn Resolution	12 bit (4096)	12 bit (4096)	12 bit (4096)	12 bit (4096)
Node address/Baud rate (kbits/s)	51 / 125 ❷ (fixed/fixed)	51 / 125 ❸ (fixed/fixed)	51 / 125 ❷ (fixed/fixed)	51 / 125 ❷ (fixed/fixed)
Incremental Output	None	None	TTL/RS 422 (2048 PPR)	HTL/Push-Pull (2048 PPR)
Shaft Version	Ø 12 x 30 mm blind hollow shaft	Ø 12 x 30 mm blind hollow shaft	Ø 12 x 30 mm blind hollow shaft	Ø 12 x 30 mm blind hollow shaft
Temperature Range	-40 to +176 °F (-40 to +80 °C)	-22 to +167 °F (-30 to +75 °C)	-40 to +176 °F (-40 to +80 °C)	-40 to +176 °F (-40 to +80 °C)
IP Rating	IP 67	IP 67	IP 67	IP 67
Electrical Connection	Removable Bus Cover with Cable Glands	Fixed Connection - (2m) Radial Cable	3 x M12 Connectors (Bus-in, TTL, Bus-out)	3 x M12 Connectors (Bus-in, HTL, Bus-out)

NORD AC Vector Drive Encoder Compatability

NORD AC Vector Drive	Turck Encoder Type (NORD P/N)			
	T8.5888 (19551883)	T8.5888 (19551891)	T8.5888 (19551881)	T8.5888 (19551886)
SK530E	✓	✓	✓	
SK200E	✓ ❹			✓
SK210E	✓ ❹			✓
SK220E	✓ ❹			✓
SK230E	✓ ❹			✓
SK205E	✓			✓
SK215E	✓			✓
SK225E	✓			✓
SK235E	✓			✓

❶ *CANopen® profile DS406 V3.2 contains device specific add-ons to work with NORD AC Variable Frequency Drives*
❷ *Device specific CANopen® profile DS406 V3.2 is also available.*
❸ *CANopen® Lift© profile DS417 V1.1 is also available.*
❹ *Linedriver / RS485 is functionally integrated.*

CANopen® is a registered trademark of the Controller Area Network (CAN) automation user's group

Send Quote Requests to info@automatedpt.com
Call +1(800)985-6929 To Order or Order Online At Nordgearmotors.com

Notes

NOTES

Send Quote Requests to info@automatedpt.com
Call +1(800)985-6929 To Order or Order Online At Nordgearmotors.com

Motor Ratings

Motor Ratings

- 60Hz 230/460V Standard Eff.
- 60Hz 230/460V Energy Eff.
- 60Hz 230/460V Premium Eff.
- 60Hz 575V Standard Eff.
- 60Hz 575V Energy Eff.
- 60Hz 575V Premium Eff.
- 60Hz 200/208V Standard Eff.
- 50Hz 400 Standard Eff.
- 50Hz 230/400V & 400/690V Energy Eff.
- 50Hz 230/400V & 400/690V Premium Eff.
- Energy Efficiency Regulations
- Motor Efficiency Ratings

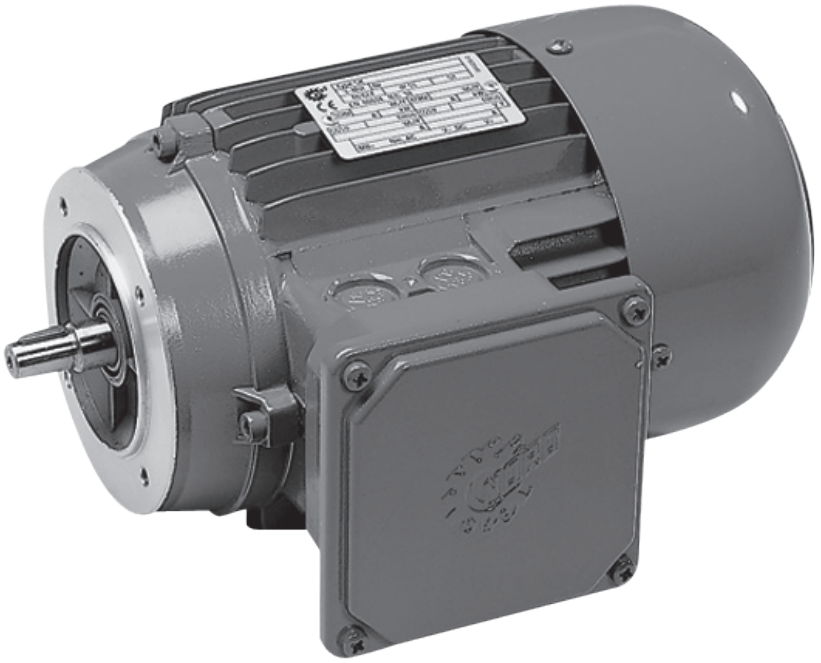

NORD® DRIVESYSTEMS

www.nord.com

INVERTER DUTY MOTOR

ee

Motor Type	Power Pn		Nn Full-load	In Full-Load Current 230V[a]	In Full-Load Current 460V[a]
	[hp]	[kW]	[rpm]	[A]	[A]
63S/4	0.16	0.12	1700	0.88	0.44
63L/4	0.25	0.18	1680	1.12	0.56
71S/4	0.33	0.25	1710	1.56	0.78
71L/4	0.5	0.37	1720	1.90	0.95
80S/4	0.75	0.55	1710	2.70	1.35
80L/4	1	0.75	1650	3.66	1.83
90S/4	1.5	1.1	1660	4.84	2.42
90L/4	2	1.5	1660	6.34	3.17
100L/4	3	2.2	1705	9.0	4.50
100LA/4	5	3.7	1725	15.2	7.62
132S/4	7.5	5.5	1735	19.8	9.9
132M/4	10	7.5	1735	25.8	12.9
160M/4	15	11	1770	38.4	19.2

pe

Performance Data

NORD DRIVESYSTEMS

Standard Efficiency

230/460V – 60Hz

Inverter duty • TEFC
Synchronous speed 1800rpm @ 60Hz • 4-pole • Three-phase
Voltages: 230/460V – 60Hz • 1.15 Service Factor
Continuous Duty • 40°C Ambient • up to 3300ft Elevation
Class B temperature rise • Class F insulation

Motor Type	Power P_n		N_n Full-load	I_n Full-Load Current 230V	460V	I_a/I_n	Code Letter	Torque T_n	T_a/T_n	T_k/T_n	pf	Eff.	J_m Inertia
	[hp]	[kW]	[rpm]	[A]	[A]	[%]		[lb-in]				[%]	[lb-ft²]
63 S/4	0.16	0.12	1700	0.88	0.44	250	F	5.9	2.7	3.5	0.66	52.0	0.0050
63 L/4	0.25	0.18	1680	1.12	0.56	270	E	9.4	2.3	2.5	0.71	57.0	0.0066
71 S/4	0.33	0.25	1710	1.56	0.78	310	G	12.2	2.4	2.7	0.64	63.0	0.015
71 L/4	0.5	0.37	1720	1.90	0.95	350	F	18.3	2.3	2.7	0.69	71.0	0.018
80 S/4	0.75	0.55	1710	2.70	1.35	350	F	27.6	2.2	2.3	0.71	72.0	0.030
80 L/4	1	0.75	1650	3.66	1.83	390	G	38.2	2.2	2.3	0.74	70.0	0.039
90 S/4	1.5	1.1	1660	4.84	2.42	490	G	57.0	2.5	2.8	0.78	73.0	0.056
90 L/4	2	1.5	1660	6.34	3.17	510	G	75.9	2.5	2.8	0.80	74.0	0.074
100 L/4	3	2.2	1705	9.00	4.50	490	G	111	2.3	2.6	0.81	76.0	0.107
100 LA/4	5	3.7	1725	15.2	7.62	510	G	183	2.7	3.1	0.75	81.0	0.178

P_n - Full load power
N_n - Full load speed
I_n - Full load current
I_a - Locked-rotor current
I_a/I_n - Locked-rotor current ratio (%)
T_n - Full-load torque
T_a - Locked-rotor torque
T_a/T_n - Locked-rotor torque ratio
T_k - Break-down torque
T_k/T_n - Break-down torque ratio
pf - Power factor
Eff - Normal efficiency
J_m - Motor inertia

MOTORS

Send Quote Requests to info@automatedpt.com
Call +1(800)985-6929 To Order or Order Online At Nordgearmotors.com

NORD DRIVESYSTEMS

Performance Data

Energy Efficient (EPAct)

230/460V – 60Hz / EE

Inverter duty • TEFC
Synchronous speed 1800rpm @ 60Hz • 4-pole • Three-phase
Voltages: 230/460V – 60Hz • 1.15 Service Factor
Continuous Duty • 40°C Ambient • up to 3300ft Elevation
Class B temperature rise • Class F insulation

CC092B energy verified

Motor Type	Power Pn		N_n Full-load	I_n Full-Load Current 230V	460V	I_a/I_n	Code Letter	Torque T_n	T_a/T_n	T_k/T_n	pf	Eff.	J_m Inertia
	[hp]	[kW]	[rpm]	[A]	[A]	[%]		[lb-in]				[%]	[lb-ft²]
80 LH/4	1	0.75	1750	3.88	1.94	600	K	36.0	4.6	4.3	0.59	82.5	0.045
90 SH/4	1.5	1.1	1740	4.30	2.15	630	L	54.3	3.5	3.8	0.76	84.0	0.081
90 LH/4	2	1.5	1745	6.30	3.15	670	K	72.2	4.3	4.5	0.71	84.0	0.093
100 LH/4	3	2.2	1765	8.60	4.30	790	L	107	3.6	4.7	0.73	87.5	0.178
112 MH/4	5	3.7	1770	14.4	7.20	810	L	178	4.0	4.8	0.74	87.5	0.304

P_n - **Full load power**
N_n - **Full load speed**
I_n - **Full load current**
I_a - **Locked-rotor current**
I_a/I_n - **Locked-rotor current ratio (%)**
T_n - **Full-load torque**
T_a - **Locked-rotor torque**
T_a/T_n - **Locked-rotor torque ratio**
T_k - **Break-down torque**
T_k/T_n - **Break-down torque ratio**
pf - **Power factor**
Eff - **Normal efficiency**
J_m - **Motor inertia**

MOTORS

Send Quote Requests to info@automatedpt.com
Call +1(800)985-6929 To Order or Order Online At Nordgearmotors.com

Performance Data

NORD DRIVESYSTEMS

Premium Efficient (EISA)

230/460V – 60Hz / PE

Inverter duty • TEFC
Synchronous speed 1800rpm @ 60Hz • 4-pole • Three-phase
Voltages: 230/460V – 60Hz • 1.15 Service Factor
Continuous Duty • 40°C Ambient • up to 3300ft Elevation
Class B temperature rise • Class F insulation

CC092B energy verified

Motor Type	Power P_n		N_n Full-load	I_n Full-Load Current		I_a/I_n	Code Letter	Torque T_n	T_a/T_n	T_k/T_n	pf	Eff.	J_m Inertia
				230V	460V								
	[hp]	[kW]	[rpm]	[A]	[A]	[%]		[lb-in]				[%]	[lb-ft²]
80 LP/4	1	0.75	1730	3.14	1.57	650	L	36.4	3.4	3.8	0.70	86.1	0.045
90 SP/4	1.5	1.1	1740	4.20	2.10	840	J	54.3	4.1	4.9	0.76	86.9	0.081
90 LP/4	2	1.5	1730	5.60	2.80	760	K	72.9	3.8	4.2	0.78	87.0	0.093
100 LP/4	3	2.2	1770	7.70	3.84	920	L	107	3.0	4.5	0.79	90.0	0.192
112 MP/4	5	3.7	1755	13.0	6.50	910	L	180	3.8	4.3	0.80	90.3	0.332

P_n - **Full load power**
N_n - **Full load speed**
I_n - **Full load current**
I_a - **Locked-rotor current**
I_a/I_n - **Locked-rotor current ratio (%)**
T_n - **Full-load torque**
T_a - **Locked-rotor torque**
T_a/T_n - **Locked-rotor torque ratio**
T_k - **Break-down torque**
T_k/T_n - **Break-down torque ratio**
pf - **Power factor**
Eff - **Normal efficiency**
J_m - **Motor inertia**

MOTORS

Send Quote Requests to info@automatedpt.com
Call +1(800)985-6929 To Order or Order Online At Nordgearmotors.com

Performance Data

Standard Efficiency

575V – 60Hz

Inverter duty • TEFC
Synchronous speed 1800rpm @ 60Hz • 4-pole • Three-phase
Voltages: 332/575V – 60Hz • 1.15 Service Factor
Continuous Duty • 40°C Ambient • up to 3300ft Elevation
Class B temperature rise • Class F insulation

Motor Type	Power P_n		N_n Full-load	I_n Full-Load Current 575V	I_a/I_n	Code Letter	Torque T_n	T_a/T_n	T_k/T_n	pf	Eff.	J_m Inertia
	[hp]	[kW]	[rpm]	[A]	[%]		[lb-in]				[%]	[lb-ft²]
63 S/4	0.16	0.12	1700	0.37	250	F	5.9	2.7	3.5	0.66	52.0	0.0050
63 L/4	0.25	0.18	1680	0.46	270	E	9.4	2.3	2.5	0.71	57.0	0.0066
71 S/4	0.33	0.25	1710	0.66	310	G	12.2	2.4	2.7	0.64	63.0	0.015
71 L/4	0.5	0.37	1720	0.80	350	F	18.3	2.3	2.7	0.69	71.0	0.018
80 S/4	0.75	0.55	1710	1.12	350	F	27.6	2.2	2.3	0.71	72.0	0.030
80 L/4	1	0.75	1650	1.46	390	G	38.2	2.2	2.3	0.74	70.0	0.039
90 S/4	1.5	1.1	1660	1.94	490	G	57.0	2.5	2.8	0.78	73.0	0.056
90 L/4	2	1.5	1660	2.54	510	G	75.9	2.5	2.8	0.80	74.0	0.074
100 L/4	3	2.2	1705	3.63	490	G	111	2.3	2.6	0.81	76.0	0.107
100 LA/4	5	3.7	1725	6.10	510	G	183	2.7	3.1	0.75	81.0	0.178

P_n - **Full load power**
N_n - **Full load speed**
I_n - **Full load current**
I_a - **Locked-rotor current**
I_a/I_n - **Locked-rotor current ratio (%)**
T_n - **Full-load torque**
T_a - **Locked-rotor torque**
T_a/T_n - **Locked-rotor torque ratio**
T_k - **Break-down torque**
T_k/T_n - **Break-down torque ratio**
pf - **Power factor**
Eff - **Normal efficiency**
J_m - **Motor inertia**

MOTORS

Send Quote Requests to info@automatedpt.com
Call +1(800)985-6929 To Order or Order Online At Nordgearmotors.com

Performance Data

NORD DRIVESYSTEMS

Energy Efficient (EPAct)

575V – 60Hz / EE

Inverter duty • TEFC
Synchronous speed 1800rpm @ 60Hz • 4-pole • Three-phase
Voltages: 332/575V – 60Hz • 1.15 Service Factor
Continuous Duty • 40°C Ambient • up to 3300ft Elevation
Class B temperature rise • Class F insulation

CC092B energy verified

Motor Type	Power P_n		N_n Full-load	I_n Full-Load Current 575V	I_a/I_n	Code Letter	Torque T_n	T_a/T_n	T_k/T_n	pf	Eff.	J_m Inertia
	[hp]	[kW]	[rpm]	[A]	[%]		[lb-in]				[%]	[lb-ft²]
80 LH/4	1	0.75	1750	1.50	600	K	36.0	4.6	4.3	0.59	82.5	0.045
90 SH/4	1.5	1.1	1740	1.75	630	L	54.3	3.5	3.8	0.76	84.0	0.081
90 LH/4	2	1.5	1745	2.45	670	K	72.2	4.3	4.5	0.71	84.0	0.093
100 LH/4	3	2.2	1765	3.40	790	L	107	3.6	4.7	0.73	87.5	0.178
112 MH/4	5	3	1770	5.60	810	L	178	4.0	4.8	0.74	87.5	0.304

P_n - Full load power
N_n - Full load speed
I_n - Full load current
I_a - Locked-rotor current
I_a/I_n - Locked-rotor current ratio (%)
T_n - Full-load torque
T_a - Locked-rotor torque
T_a/T_n - Locked-rotor torque ratio
T_k - Break-down torque
T_k/T_n - Break-down torque ratio
pf - Power factor
Eff - Normal efficiency
J_m - Motor inertia

MOTORS

Send Quote Requests to info@automatedpt.com
Call +1(800)985-6929 To Order or Order Online At Nordgearmotors.com

NORD DRIVESYSTEMS

Performance Data

Premium Efficient (EISA)

575V – 60Hz / PE

Inverter duty • TEFC
Synchronous speed 1800rpm @ 60Hz • 4-pole • Three-phase
Voltages: 332/575V – 60Hz • 1.15 Service Factor
Continuous Duty • 40°C Ambient • up to 3300ft Elevation
Class B temperature rise • Class F insulation

CC092B energy verified

Motor Type	Power P_n [hp]	Power P_n [kW]	N_n Full Load [rpm]	I_n Full-Load Current 575V [A]	I_a/I_n [%]	Code Letter	Torque T_n [lb-in]	T_a/T_n	T_k/T_n	pf	Eff. [%]	J_m Inertia [lb-ft²]
80 LP/4	1	0.75	1730	1.30	650	L	36.4	3.4	3.8	0.70	86.1	0.045
90 SP/4	1.5	1.1	1740	1.68	840	J	54.3	4.1	4.9	0.76	86.9	0.081
90 LP/4	2	1.5	1730	2.24	760	K	72.9	3.8	4.2	0.78	87.0	0.093
100 LP/4	3	2.2	1770	3.07	920	L	107	3.0	4.5	0.79	90.0	0.192
112 MP/4	5	3.7	1755	5.20	910	L	180	3.8	4.3	0.80	90.3	0.332

P_n - Full load power
N_n - Full load speed
I_n - Full load current
I_a - Locked-rotor current
I_a/I_n - Locked-rotor current ratio (%)
T_n - Full-load torque
T_a - Locked-rotor torque
T_a/T_n - Locked-rotor torque ratio
T_k - Break-down torque
T_k/T_n - Break-down torque ratio
pf - Power factor
Eff - Normal efficiency
J_m - Motor inertia

MOTORS

Send Quote Requests to info@automatedpt.com
Call +1(800)985-6929 To Order or Order Online At Nordgearmotors.com

Send Quote Requests to info@automatedpt.com Call +1(800)985-6929 To Order or Order Online At Nordgearmotors.com

Performance Data

NORD DRIVESYSTEMS

Standard Efficiency

200-208V – 60Hz

Inverter duty • Induction motor • TEFC
Synchronous speed 1800rpm @ 60Hz • 4-pole • Three-phase
Voltages: 208V – 60Hz • 1.15 Service Factor
Continuous Duty • 40°C Ambient • up to 3300ft Elevation
Class B temperature rise • Class F insulation

Motor Type	Power P_n		N_n Full-load	I_n 208V	I_a/I_n	Code Letter	Torque T_n	T_a/T_n	T_k/T_n	pf	Eff.	J_m Inertia
	[hp]	[kW]	[rpm]	[A]	[%]		[lb-in]				[%]	[lb-ft²]
63S/4	0.16	0.12	1700	0.97	245	F	5.93	2.1	2.2	0.66	52	0.005
63L/4	0.25	0.18	1680	1.24	275	E	9.38	2.1	2.2	0.71	57	0.0067
71S/4	0.33	0.25	1710	1.73	310	G	12.2	2.5	2.4	0.64	63	0.015
71L/4	0.5	0.37	1720	2.10	355	F	18.3	2.45	2.6	0.69	71	0.0181
80S/4	0.75	0.55	1710	2.99	355	F	27.6	2.2	2.2	0.71	72	0.0304
80L/4	1	0.75	1650	4.05	390	G	38.2	2.2	2.3	0.74	70	0.0392
90S/4	1.5	1.1	1660	5.35	445	G	57.0	2.7	2.6	0.78	73	0.0670
90L/4	2	1.5	1660	7.01	465	G	75.9	2.55	2.5	0.80	74	0.0855
100L/4	3	2.2	1705	9.95	490	G	111	2.3	2.6	0.81	82	0.107
100LA/4	5	3.7	1725	16.8	510	G	183	2.7	3.1	0.75	81	0.162

P_n - **Full load power**
N_n - **Full load speed**
I_n - **Full load current**
I_a - **Locked-rotor current**
I_a/I_n - **Locked-rotor current ratio (%)**
T_n - **Full-load torque**
T_a - **Locked-rotor torque**
T_a/T_n - **Locked-rotor torque ratio**
T_k - **Break-down torque**
T_k/T_n - **Break-down torque ratio**
pf - **Power factor**
Eff - **Normal efficiency**
J_m - **Motor inertia**

MOTORS

Send Quote Requests to info@automatedpt.com
Call +1(800)985-6929 To Order or Order Online At Nordgearmotors.com

NORD DRIVESYSTEMS

Performance Data

Standard Efficiency

400V – 50Hz

Inverter duty • Induction motor • TEFC
Synchronous speed 1500rpm @ 50Hz • 4-pole • Three-phase
Voltages: 400V – 50Hz • 1.0 Service Factor
Continuous Duty • 40°C Ambient • up to 3300ft Elevation
Class B temperature rise • Class F insulation

CE

Motor Type	Power P_n		N_n Full-Load	I_n 400 V (380-420V)	I_a/I_n	Code Letter	Torque T_n	T_a/T_n	T_k/T_n	pf	Eff.	J_m Inertia
	[hp]	[kW]	[rpm]	[A]	[%]		[lb-in				[%]	[lb-ft²]
63 S/4	0.16	0.12	1335	0.55	290	H	7.59	2.7	2.7	0.64	49.9	0.0050
63 L/4	0.25	0.18	1360	0.68	330	G	11.2	2.5	2.6	0.64	56.2	0.0066
71 S/4	0.33	0.25	1380	0.76	330	F	15.3	2.2	2.1	0.77	61.3	0.017
71 L/4	0.5	0.37	1380	1.09	360	F	22.7	2.0	2.4	0.71	64.4	0.020
80 S/4	0.75	0.55	1375	1.52	330	E	33.8	1.9	2.0	0.73	75.1	0.026
80 L/4	1	0.75	1375	2.10	350	F	46.1	2.0	2.1	0.74	75.5	0.034
90 S/4	1.5	1.1	1395	2.81	440	G	66.6	2.3	2.6	0.74	77.6	0.056
90 L/4	2	1.5	1395	3.55	480	G	90.8	2.3	2.6	0.78	77.5	0.074
100 L/4	3	2.2	1440	5.22	510	G	129	2.3	3.0	0.74	80.8	0.107
100 LA/4	4	3	1415	6.54	540	G	179	2.5	2.9	0.80	83.3	0.142
112 M/4	5.4	4	1445	8.30	530	G	234	2.3	2.8	0.80	85.1	0.261

a) Motors 10hp (7.5kw) and below are rated 230/400Y - volts, motors above 10hp (7.5kw) are rated 400/690Y-volts

P_n - **Full load power**
N_n - **Full load speed**
I_n - **Full load current**
I_a - **Locked-rotor current**
I_a/I_n - **Locked-rotor current ratio (%)**
T_n - **Full-load torque**
T_a - **Locked-rotor torque**
T_a/T_n - **Locked-rotor torque ratio**
T_k - **Break-down torque**
T_k/T_n - **Break-down torque ratio**
pf - **Power factor**
Eff - **Normal efficiency**
J_m - **Motor inertia**

MOTORS

Send Quote Requests to info@automatedpt.com
Call +1(800)985-6929 To Order or Order Online At Nordgearmotors.com

Performance Data

NORD DRIVESYSTEMS

Energy Efficient (EPAct)

400V (380-420V) – 50Hz

Inverter duty • Induction motor • TEFC
Synchronous speed 1500rpm @ 50Hz • 4-pole • Three-phase
Voltages: 400V (380-420V) – 50Hz • 1.0 Service Factor
Continuous Duty • 40°C Ambient • up to 3300ft Elevation
Class B temperature rise • Class F insulation

IE2 CE

Motor Type	Power P_n		N_n Full-Load	I_n 400V (380-420V)	I_a/I_n	Code Letter	Torque T_n	T_a/T_n	T_k/T_n	pf	Eff.	J_m Inertia
	[hp]	[kW]	[rpm]	[A]	[%]		[lb-in]				[%]	[lb-ft²]
80 SH/4	0.75	0.55	1,420	1.41	510	H	32.7	3.1	3.2	0.70	80.8	0.033
80 LH/4	1	0.75	1,415	1.76	520	H	44.8	3.0	3.1	0.75	82.4	0.045
90 SH/4	1.5	1.1	1,435	2.42	610	H	64.8	3.1	3.5	0.80	81.8	0.081
90 LH/4	2	1.5	1,415	3.34	580	H	89.6	3.3	3.5	0.79	82.8	0.093
100 LH/4	3	2.2	1,445	4.65	730	J	129	3.7	4.3	0.79	86.6	0.178
100 AH/4	4	3	1,425	6.59	630	J	178	3.1	3.5	0.77	85.6	0.178
112 MH/4	5.4	4	1,440	8.02	750	J	235	3.1	3.6	0.83	86.7	0.332

a) Motors 10hp (7.5kw) and below are rated 230/400Y - volts, motors above 10hp (7.5kw) are rated 400/690Y-volts

P_n - **Full load power**
N_n - **Full load speed**
I_n - **Full load current**
I_a - **Locked-rotor current**
I_a/I_n - **Locked-rotor current ratio (%)**
T_n - **Full-load torque**
T_a - **Locked-rotor torque**
T_a/T_n - **Locked-rotor torque ratio**
T_k - **Break-down torque**
T_k/T_n - **Break-down torque ratio**
pf - **Power factor**
Eff - **Normal efficiency**
J_m - **Motor inertia**

MOTORS

Send Quote Requests to info@automatedpt.com
Call +1(800)985-6929 To Order or Order Online At Nordgearmotors.com

NORD DRIVESYSTEMS

Performance Data

Premium Efficienct

400V (380-420V) – 50Hz

Inverter duty • Induction motor • TEFC
Synchronous speed 1500rpm @ 50Hz • 4-pole • Three-phase
Voltages: 400V (380-420V) – 50Hz • 1.10 Service Factor
Continuous Duty • 40°C Ambient • up to 3300ft Elevation
Class B temperature rise • Class F insulation

IE3 CE

Motor Type	Power P_n		N_n Full-Load	I_n 400V (380-420V)	I_a/I_n	Code Letter	Torque T_n	T_a/T_n	T_k/T_n	pf	Eff.	J_m Inertia
	[hp]	[kW]	[rpm]	[A]	[%]		[lb-in]				[%]	[lb-ft²]
80 LP/4	1	0.75	1,415	1.79	540	H	44.8	3.0	3.1	0.72	83.7	0.045
90 SP/4	1.5	1.1	1,430	2.38	700	J	65.0	3.6	4.0	0.78	85.3	0.081
90 LP/4	2	1.5	1,415	3.23	590	H	89.6	3.3	3.5	0.79	85.3	0.093
100 LP/4	3	2.2	1,465	4.27	820	K	127	2.6	3.9	0.83	88.1	0.192
100 AP/4	4	3	1,460	6.05	730	J	174	2.4	3.6	0.81	88.1	0.192
112 MP/4	5.4	4	1,440	7.82	750	J	235	3.4	3.6	0.83	88.6	0.332

a) Motors 10hp (7.5kw) and below are rated 230/400Y - volts, motors above 10hp (7.5kw) are rated 400/690Y-volts

P_n - **Full load power**
N_n - **Full load speed**
I_n - **Full load current**
I_a - **Locked-rotor current**
I_a/I_n - **Locked-rotor current ratio (%)**
T_n - **Full-load torque**
T_a - **Locked-rotor torque**
T_a/T_n - **Locked-rotor torque ratio**
T_k - **Break-down torque**
T_k/T_n - **Break-down torque ratio**
pf - **Power factor**
Eff - **Normal efficiency**
J_m - **Motor inertia**

MOTORS

Send Quote Requests to info@automatedpt.com
Call +1(800)985-6929 To Order or Order Online At Nordgearmotors.com

Send Quote Requests to info@automatedpt.com Call +1(800)985-6929 To Order or Order Online At Nordgearmotors.com

Energy Efficiency Regulations

NORD DRIVESYSTEMS

Energy Efficiency Global Regulation

United States

The United States has implemented amended motor efficiency regulations. This process started with the "Public Law 110-140", which had been passed through legislation on December 19, 2007, and is called the "Energy Independence and Security Act" (EISA). This legislation in most cases replaces the existing law that governed motor efficiency in the USA (Energy Policy Act or EPAct). In general, EISA increases the efficiency requirements for many motors. EISA includes a "Premium Efficiency" motor class in addition to the two existing efficiency classes of motors that had been utilized. This law took effect on December 19, 2010 wheras all motors produced after that date must meet EISA requirements. Motors that had been in stock at that time are exempt and still may be sold.

The EISA law also expanded the scope of motors required to meet efficiency levels. The following classes of motors were not included in EPAct but now must meet efficiency requirements per EISA:

Motor Types Covered in the EISA Efficiency Requirements
U-frame motors
NEMA electrical design C motors
Closed coupled pump motors
Footless motors
Vertical solid shaft thrust motors
8-pole motors
Voltages other then 230 or 460
201-500 hp motors

In this law, the US Department of Energy (DOE) has been responsible for writing the new regulation requirements. These regulations clarify how the law has been implemented and provide an increased level of detail in terms of specifics. The regulations are included in the Federal Register / Volume 74, N0. 54 / Monday, March 23, 2009 – Part 431. The regulations also indicate what style of motors must conform to each efficiency level explained.

Motor Classes Covered by EISA Efficiency Requirements
General Purpose Motors per NEMA MG1
1-500hp
2, 4, 6 & 8 pole
600V and below, 3-phase, 60Hz
NEMA Designs A, B, C & equivalent IEC equivalents
TEFC – Totally Enclosed Fan Cooled
ODP – Open Drip Proof
XP – Explosion Proof (ATEX)
Increased enclosure protections (Examples include Washdown, Severe duty,…)
NEMA Frames 140 and larger
IEC Frames 90 & Larger
NEMA T-frame (and U-frame) & IEC equivalents

Any of the following are exemptions from the EISA requirements:

Motor Classes not Covered by EISA Efficiency Requirements
Definite or Special Purpose per NEMA MG1
Integral gearmotor motors
Less than 1 hp
Multi-speed motors
Single-phase motors
DC Motors
NEMA Design D high slip
NEMA 56 or smaller frame
IEC 80 or smaller frame
50Hz motors
Intermittent duty motors (S2 or S3)
TENV – Totally Enclosed Non-Ventilated
TEAO – Totally Enclosed Air-Over
(TEBC – Totally Enclosed Blower Cooled)
Integrated AC drive (SK200E or SK300E combined with motor)

Send Quote Requests to info@automatedpt.com
Call +1(800)985-6929 To Order or Order Online At Nordgearmotors.com

Energy Efficiency Regulations

Efficiency Requirements for Motors

According to EISA, when motors have a mandated efficiency requirement they are categorized into two classes, Subtype I and Subtype II. In general, motors that needed to be energy efficient per EPAct standards now must be premium efficient, Subtype I.

Motors that did not have a required efficiency per EPAct but now require an efficiency level in EISA are included in Subtype II (energy efficient). The following is a more detailed list of motors included in each efficiency category.

Premium efficiency [Subtype I] – ***must match all of the following criteria***
IEC or NEMA footed or foot+flange
1-200hp
Poles 2,4,6
230/460V-60Hz
Motor or brakemotor
NEMA 140 frame& larger or IEC 90 frame & larger
NEMA Design A or B

Energy efficiency [Subtype II] - ***Meets the premium efficiency guidelines except:***
Footless IEC or NEMA Flange
(NEMA-C or IEC B5 or B14)
Other 60Hz voltages (like 208V and 575V)
8 pole
201-500hp
NEMA Design C
U-Frame

Canada

Three-phase electric induction motors are included in the products governed under Canada's Energy Efficiency Regulations (the Regulations). Natural Resources Canada (NRCan) proposes to amend the Regulations in order to

- Enforce more stringent Minimum Energy Performance Standards (MEPS) on suppliers for electric motors, imported or shipped interprovincially for sale or lease in Canada, and
- Expand the scope to include motors which were previously excluded from the Regulations.

The updated Regulations for motors sold in Canada contains three elements:

- Increase the motor efficiency requirements for 1 to 200 HP (0.75 to 150 kW) class motors to include premium efficiency levels.
- Eliminate most of the current exclusions for 1 to 200 HP(0.75 to 150 kW) motors so that they will be required to meet the current efficiency levels.
- Extend coverage to include 201 to 500 HP (151 kW to 185 kW) motors, which were previously excluded, to the current efficiency level standards.

Standard Efficient Motors

A standard efficiency motor is defined as a rotating machine rated for continuous duty operation that converts electrical power into mechanical power and:

- is an electric induction motor with a polyphase, squirrel cage type design,
- has a minimum output rating of 1 HP (0.746 kW) and up to and including 500 HP (375 kW),
- has a rated voltage of not more than 600 volts AC.
- has a rated frequency of 50/60 Hz or 60 Hz,
- is open or enclosed construction and includes explosion-proof enclosures,
- is constructed to NEMA T frame/U frame dimensions or the IEC equivalent dimensions,
- is NEMA design A, B or C, or IEC design N or H,
- is designed to operate at a single speed,
- has 2, 4, 6 or 8 pole construction,
- is of foot mounted construction or flange mounted construction with or without feet or detachable feet.
- has an IP code from 00 to 66

Premium efficient motors

A premium efficicency motor, is defined in the description above, and includes all of the additional classifications:

- rated size of 1 HP ≥ 200 HP or IEC design motor of size greater than 0.746 kW ≥ 150 kW, and
- 2, 4, or 6 poles, and
- NEMA T frame or IEC frame designation of 90 or above, and
- NEMA design A or B, or IEC design N, and
- standard NEMA shaft, R-shaft or S-shaft or an IEC equivalent.

Energy efficient motors

a motor, as defined in the premium efficiency category, with any of the following classifications, including integral gearmotors:

- 8-pole construction, or
- U frame or equivalent IEC dimensions, or
- NEMA design C or IEC design H, or
- close-coupled pump motor, or
- fire pump duty motor, or
- vertically-mounted solid shaft thrust motor, as tested in the horizontal configuration, or
- footless construction, or
- 2, 4, or 6-pole, NEMA design B motor of size greater than 200 HP and up to and including 500 HP or IEC design N motor of size greater than 150 kW and up to and including 375 kW.

Send Quote Requests to info@automatedpt.com
Call +1(800)985-6929 To Order or Order Online At Nordgearmotors.com

Send Quote Requests to info@automatedpt.com Call +1(800)985-6929 To Order or Order Online At Nordgearmotors.com

Energy Efficiency Regulations

European Union

New efficiency classes IE1, IE2, IE3 The new standard IEC 60034-30:2008 replaces the various national systems. At the same time, with the IEC 60034-2-1:2007 standard, a new procedure for the measurement of efficiency has been introduced which also contributes to international cohesiveness.

Efficiency Levels

As of June 16 2011, only motors of efficiency class IE2 or better may be used for continuous operation of standard motors with 1hp (0.75 kW) and more in the EU. The basis for this is ErP 2009/125/EC VO640-2009.

Efficiency Level (Europe - New) IEC600034-30	Efficiency Level (Europe - Old) CEMEP
IE3	New
IE2	EFF1
IE1	EFF2

Motors included in the efficiency requirements

- Single speed, three-phase induction motors 50 Hz or 50/60 Hz
- 2, 4 and 6 poles
- Rated voltage up to 1000 V
- Rated power between 0.75 kW and 375 kW
- Continuous duty operation S1 or S3 with cyclic duration factor of 80% or higher

Effective dates:

- June 16, 2011, motors shall not be less efficient than the IE2 efficiencies
- January 1, 2015 motors with a rated output of 7.5-375 kW shall not be less efficient than the IE3 or should meet the IE2 efficiency and be used with an AC drive;
- January 1, 2017 all motors with a rated output of 0.75-375 kW shall not be less efficient than the IE3 or meet IE2 standards and be used in conjunction with an AC speed drive.

Exceptions

- Submersible motors;
- Motors completely integrated in a product (gear, pump, fan or compressor,…) where the energy performance cannot be tested separate from the product
- Motors specifically designed to operate:
  - o At altitudes exceeding 1000 meters elevation;
  - o Where ambient temperature is above 40 °C;
  - o In max. operating temperature above 400 °C;
  - o Where ambient temperatures are less than -15 °C or less than 0 °C for an air cooled motors;
  - o Water cooled motors with cooling water below 5 °C or exceeding 25 °C;
  - o In explosive atmospheres per Directive 94/9/EC
- Brake motors.

Send Quote Requests to info@automatedpt.com
Call +1(800)985-6929 To Order or Order Online At Nordgearmotors.com

NORD DRIVESYSTEMS

Energy Efficiency Regulations

USA

Directive	Preferred Voltages	Circuit	Frequency
EISA 2007	230/460V	YY/Y	60Hz

Designation	Energy Efficient	Premium Efficient
Power range	1.0 - 500hp / 0.75 - 375kW	1.0-200 hp / 0.75 - 150kW
Mandatory Implementation Date	1997	12.19.2010
Number of Poles	2,4,6,8	2,4,6
Relevant Exceptions • High/Energy Efficiency • Premium Efficiency	1. Special Shafts NORD gear motors (direct attachment) 2. TEAO, TENV Totally enclosed air-over and non-ventilated motors 3. Switchable multi-speed motors 4. Intermittant operation / Short Term Operation: The directive only applies to motors in continuous operation. Other operating modes are exempted from the directive, e.g.: • S2 • S3 • S6 Explanation of Duty Classes 📖⇨ 220 5. Single phase motors	
Relevant Exceptions	N/A	1. Flange version motors 2. Vertical shaft outlet 3. NEMA Desinged C face Motors 4. Motors with voltages less than 600V and other than 230V or 460V including a +/-10% tolerance
	Motor Data 📖⇨ 236 - 245	

Mexico

Directive	Preferred Voltages	Circuit	Frequency
NOM-016 ENER-2010	127/220V 440V	Δ/Y	60Hz

Designation	MEPS
Power range	1.0-500hp / 0.75 - 373kW
Mandatory Implementation Date	12.19.2010
Number of Poles	2,4,6,8
Relevant Exceptions • MEPS	1. Switchable pole motors 2. Single phase motors 3. Intermittent operation / Short term operation The directive only applies to motors in continuous operation. Other operating modes are exempted from the directive. e.g.: • S2 • S3 • S6 Explanation of Duty Classes 📖⇨ 220 Motor Data 📖⇨ 236 - 245

MOTORS

Send Quote Requests to info@automatedpt.com
Call +1(800)985-6929 To Order or Order Online At Nordgearmotors.com

Send Quote Requests to info@automatedpt.com Call +1(800)985-6929 To Order or Order Online At Nordgearmotors.com

Energy Efficiency Regulations

Canada

Directive	Preferred Voltages	Circuit	Frequency
Energy Efficiency Regulations 1997 Updated Bulletin on Amending the Standards June 2010	332/575V	Δ/Y	60Hz

Designation	Energy Efficient	Premium Efficient
Power range	1.0 - 500hp / 0.75 - 375kW	1.0-200 hp / 0.75 - 150kW
Mandatory Implementation Date	1997	01.01.2011
Number of Poles	2,4,6,8	2,4,6
Relevant Exceptions • **High/Energy Efficiency** • **Premium Efficiency**	1. TENV Non-ventilated motors 2. Switchable multi-speed motors 3. Intermittant operation / Short Term Operation: The directive only applies to motors in continuous operation. Other operating modes are exempted from the directive: • S2 • S3 Explanation of Duty Classes 📖⇨ 220 • S6 Motor Data 📖⇨ 236 - 245 4. Single phase motors	
Relevant Exceptions	N/A	1. Gear Motors 2. Flange version motors 3. Vertical shaft outlet 4. NEMA Design C or IEC Design H NORD IE2 or "high efficiency" motors have IEC Design H characteristics.

MOTORS

Send Quote Requests to info@automatedpt.com
Call +1(800)985-6929 To Order or Order Online At Nordgearmotors.com

Send Quote Requests to info@automatedpt.com Call +1(800)985-6929 To Order or Order Online At Nordgearmotors.com

Energy Efficiency Regulations

European Union

Directive	Preferred Voltages	Circuit	Frequency
ErP 2009/125/IEC **VO 640-2009**	230/400V 400/690V	Δ/Y	50Hz

Designation	IE2 / High Efficient	IE3 / Premium Efficient
Power range	0.75 - 375kW	
Mandatory Implementation Date	06.16.2011	01.01.2015 for P ≥ 7.5kW (10hp) 01.01.2017 for P < 7.5 kW (10hp)
Number of Poles	2,4,6	
Relevant Exceptions • **IE2** • **IE3**	1. Intermittent operation / Short term operation The directive only applies to motors in continuous operation. Operating modes other than S1 as per IEC 60034-1 are exempted from the regulations. e.g.: • S3-70% • S6-80% • S9 Explanation of Duty Classes 🕮⇨ 220 Motor Data 🕮⇨ 236 - 245 2. Brake Motors 3. Switchable multi-speed motors 4. ATEX motors Motors for explosion protection (gas and dust) are exempted from the directive but may be classified according to IE 5. Ambient temperature The directive does not apply to motors which are rated for ambient temperatures > 40°C or <0°F ie: • T_{amb} = -20°C...+45°C 6. Installation altitude The directive does not apply to motors which are rated for an installation altitude greater than 1000m above sea level. 7. Single phase motors	
Special Features	N/A	**IE2 + Frequency Inverters** IE2 motors that may be used with inverters can also be used as an alternative to IE3

MOTORS

Send Quote Requests to info@automatedpt.com
Call +1(800)985-6929 To Order or Order Online At Nordgearmotors.com

Send Quote Requests to info@automatedpt.com Call +1(800)985-6929 To Order or Order Online At Nordgearmotors.com

Energy Efficiency Regulations

NORD DRIVESYSTEMS

Switzerland

Directive	Preferred Voltages	Circuit	Frequency
Eenergy Ordinance AS2009	230/400V 400/690V	Δ/Y	50Hz 50/60Hz

Designation	IE2 / High Efficient	IE3 / Premium Efficient
Power range	0.75 - 375kW	
Mandatory Implementation Date	07.01.2011	open
Number of Poles	2,4,6	
Relevant Exceptions • **IE2** • **IE3**	1. Intermittent operation / Short term operation The directive only applies to motors in continuous operation S1 or S3 > 80%. Operating modes other than S1 as per IEC 60034-1 are exempted from the regulations. e.g.: • S3-70% • S6-80% • S9 Explanation of Duty Classes 🕮⇨ 220 Motor Data 🕮⇨ 236 - 245 2. Switchable multi-speed motors 3. AC vector drive operation. Special motors for AC vector drive operation as per standard IEC 60034-25 of the International Electrical Engineering Commission. 4. ATEX motors Motors for explosion protection (gas and dust) are exempted from the directive but may be classified according to IE. 5. Ambient temperature The above directive does not apply to motors which are rated for ambient temperatures > 40°C or <0°F (up to 600W) or <15°C, eg.: • T_{amb} = -20°C...+45°C 6. Installation altitude The directive does not apply to motors which are rated for an installation altitude greater than 1000m above sea level. 7. Single phase motors	

MOTORS

Send Quote Requests to info@automatedpt.com
Call +1(800)985-6929 To Order or Order Online At Nordgearmotors.com

Send Quote Requests to info@automatedpt.com Call +1(800)985-6929 To Order or Order Online At Nordgearmotors.com

Energy Efficiency Regulations

China

Directive	Preferred Voltages	Circuit	Frequency
GB 18613-2006	230/400V Maximum 690V	Δ/Y	50Hz

Designation	Grade 2	Grade 1
Power range	0.55 - 315kW	3.0 - 315kW
Mandatory Implementation Date	07.01.2011	Voluntary
Number of Poles	2,4,6	
Relevant Exceptions • **Grade 2** • **Grade 1**	1. Intermittant operation / Short Term Operation: The directive only applies to motors in continuous operation. Operating modes other than S1 as per IEC 60034-1 are exempted from the regulations. eg: • S3-70% • S6-80% • S9 Explanation of Duty Classes 🕮⇨ 220 Motor Data 🕮⇨ 236 - 245 2. Switchable multi-speed motors 3. Single phase motors	

South Korea

Directive	Preferred Voltages	Circuit	Frequency
MKE's Notification 2009-317	220/380V 440V	Δ/Y	60Hz

Designation	MEPS		
Power range	0.75-15kW	15-37kW	37-200kW
Mandatory Implementation Date	07.01.2010	01.01.2010	07.01.2007
Number of Poles	2,4,6,8*		
Relevant Exceptions • **MEPS**	1. The Directive only applies to motors in continuous operation. Operating modes other than S1 as per IEC 60034-1 are exempted from the regulations. e.g. : • S3-70% • S6-80% • S9 Explanation of Duty Classes 🕮⇨ 220 Motor Data 🕮⇨ 236 - 245 2. Switchable multi-speed motors 3. TENV non-ventilated motors 4. 6-pole motors with powers above 160kW 5. 8-pole motors with powers above 110kW 6. Single phase motors * The statutory MEPS comes into effect at a later date for 8-pole motors: from 01.01.2010 37-110kW from 01.01.2011 0.75 - 37kW		

MOTORS

Send Quote Requests to info@automatedpt.com
Call +1(800)985-6929 To Order or Order Online At Nordgearmotors.com

Energy Efficiency Regulations

NORD DRIVESYSTEMS

Australia

Directive	Preferred Voltages	Circuit	Frequency
MEPS AS/NZS 1359.5	230/400V	Δ/Y	50Hz

Designation	MEPS	High Efficiency (Premium Efficient)
Power range	0.73 -185 kW	0.73 -185 kW
Mandatory Implementation Date	04.01.2006	Voluntary
Number of Poles	2,4,6,8	
Relevant Exceptions • **MEPS** • **High Efficiency**	1. Intermittant operation / Short Term Operation: The directive only applies to motors in continuous operation. Operating modes other than S1 as per IEC 60034-1 are exempted from the regulations. eg: • S3-70% • S6-80% • S9 Explanation of Duty Classes 🕮⇨ 220 Motor Data 🕮⇨ 236 - 245 2. Motors for AC vector drive operation 3. Switchable multi-speed motors 4. Single phase motors	

MOTORS

Brazil

Directive	Preferred Voltages	Circuit	Frequency
Decreto n° 4.508	230/380V 440V	Δ/Y	60Hz

Designation	ALTO RENDIMENTO
Power range	0.75 - 185kW
Mandatory Implementation Date	12.08.2009
Number of Poles	2,4,6, 8
Relevant Exceptions • **ALTO RENDIMENTO**	1. Intermittent operation / Short term operation The directive only applies to motors in continuous operation. Operating modes other than S1 as per IEC 60034-1 are exempted from the regulations. e.g.: • S3-70% • S6-80% • S9 Explanation of Duty Classes 🕮⇨ 220 Motor Data 🕮⇨ 236 - 245 2. Motors for AC vector drive operation. 3. Switchable multi-speed motors 4. 6-pole motors with powers above 150kW 5. 8-pole motors with powers above 110kW 6. Single phase motors

Send Quote Requests to info@automatedpt.com
Call +1(800)985-6929 To Order or Order Online At Nordgearmotors.com

NORD DRIVESYSTEMS

Motor Efficiency Ratings

US & Canadian Motor Efficiencies for Energy Efficient 60Hz Motors

Full-Load Efficiencies of General Purpose Electric Motors [Subtype II] - Energy efficiency								
Motor Horse-power	Nominal full load efficiency							
	Open motors				Enclosed motors			
	8 pole	6 pole	4 pole	2 pole	8 pole	6 pole	4 pole	2 pole
1	74.0	80.0	82.5		74.0	80.0	82.5	75.5
1.5	75.5	84.0	84.0	82.5	77.0	85.5	84.0	82.5
2	85.5	85.5	84.0	84.0	82.5	86.5	84.0	84.0
3	86.5	86.5	86.5	84.0	84.0	87.5	87.5	85.5
5	87.5	87.5	87.5	85.5	85.5	87.5	87.5	87.5
7.5	88.5	88.5	88.5	87.5	85.5	89.5	89.5	88.5
10	89.5	90.2	89.5	88.5	88.5	89.5	89.5	89.5
15	89.5	90.2	91.0	89.5	88.5	90.2	91.0	90.2
20	90.2	91.0	91.0	90.2	89.5	90.2	91.0	90.2
25	90.2	91.7	91.7	91.0	89.5	91.7	92.4	91.0
30	91.0	92.4	92.4	91.0	91.0	91.7	92.4	91.0
40	91.0	93.0	93.0	91.7	91.0	93.0	93.0	91.7
50	91.7	93.0	93.0	92.4	91.7	93.0	93.0	92.4
60	92.4	93.6	93.6	93.0	91.7	93.6	93.6	93.0
75	93.6	93.6	94.1	93.0	93.0	93.6	94.1	93.0
100	93.6	94.1	94.1	93.0	93.0	94.1	94.5	93.6
125	93.6	94.1	94.5	93.6	93.6	94.1	94.5	94.5
150	93.6	94.5	95.0	93.6	93.6	95.0	95.0	94.5
200	93.6	94.5	95.0	94.5	94.1	95.0	95.0	95.0
250	94.5	94.5	95.4	94.5	94.5	95.0	95.0	95.4

US & Canadian Motor Efficiencies for Premium Efficient 60Hz Motors

Full-Load Efficiencies of General Purpose Electric Motors [Subtype I Premium Efficiency						
Motor Horse-power	Nominal full load efficiency					
	Open motors			Enclosed motors		
	6 pole	4 pole	2 pole	6 pole	4 pole	2 pole
1	82.5	85.5	77.0	82.5	85.5	77.0
1.5	86.5	86.5	84.0	87.5	86.5	84.0
2	87.5	86.5	85.5	88.5	86.5	85.5
3	88.5	89.5	85.5	89.5	89.5	86.5
5	89.5	89.5	86.5	89.5	89.5	88.5
7.5	90.2	91.0	88.5	91.0	91.7	89.5
10	91.7	91.7	89.5	91.0	91.7	90.2
15	91.7	93.0	90.2	91.7	92.4	91.0
20	92.4	93.0	91.0	91.7	93.0	91.0
25	93.0	93.6	91.7	93.0	93.6	91.7
30	93.6	94.1	91.7	93.0	93.6	91.7
40	94.1	94.1	92.4	94.1	94.1	92.4
50	94.1	94.5	93.0	94.1	94.5	93.0
60	94.5	95.0	93.6	94.5	95.0	93.6
75	94.5	95.0	93.6	94.5	95.4	93.6
100	95.0	95.4	93.6	95.0	95.4	94.1
125	95.0	95.4	94.1	95.0	95.4	95.0
150	95.4	95.8	94.1	95.8	95.8	95.0
200	95.4	95.8	95.0	95.8	96.2	95.4

Send Quote Requests to info@automatedpt.com
Call +1(800)985-6929 To Order or Order Online At Nordgearmotors.com

Motor Efficiency Ratings

NORD DRIVESYSTEMS

European Motor Efficiencies 50Hz

Efficiency Classes of IE1, IE2, and IE3 motors									
Motor Power [kW]	IE1, 50Hz			IE2, 50HZ			IE3, 50Hz		
	2 pole	4 pole	6 pole	2 pole	4 pole	6 pole	2 pole	4 pole	6 pole
0.75	72.1	72.1	70.0	77.4	79.6	75.9	80.7	82.5	78.9
1.1	75.0	75.0	72.9	79.6	81.4	78.1	82.7	84.1	81.0
1.5	77.2	77.2	75.2	81.3	82.8	79.8	84.2	85.3	82.5
2.2	79.7	79.7	77.7	83.2	84.3	81.8	85.9	86.7	84.3
3.0	81.5	81.5	79.7	84.6	85.5	83.3	87.1	87.7	85.6
4.0	83.1	83.1	81.4	85.8	86.6	84.6	88.1	88.6	86.8
5.5	84.7	84.7	83.1	87.0	87.7	86.0	89.2	89.6	88.0
7.5	86.0	86.0	84.7	88.1	88.7	87.2	90.1	90.4	89.1
11	87.6	87.6	86.4	89.4	89.8	88.7	91.2	91.4	90.3
15	88.7	88.7	87.7	90.3	90.6	89.7	91.9	92.1	91.2
18.5	89.3	89.3	88.6	90.9	91.2	90.4	92.4	92.6	91.7
22	89.9	89.9	89.2	91.3	91.6	90.9	92.7	93.0	92.2
30	90.7	90.7	90.2	92.0	92.3	91.7	93.3	93.6	92.9
37	91.2	91.2	90.8	92.5	92.7	92.2	93.7	93.9	93.3
45	91.7	91.7	91.4	92.9	93.1	92.7	94.0	94.2	93.7
55	92.1	92.1	91.9	93.2	93.5	93.1	94.3	94.6	94.1
75	92.7	92.7	92.6	93.8	94.0	93.7	94.7	95.0	94.6
90	93.0	93.0	92.9	94.1	94.2	94.0	95.0	95.2	94.9
110	93.3	93.3	93.3	94.3	94.5	94.3	95.2	95.4	95.1
132	93.5	93.5	93.5	94.6	94.7	94.6	95.4	95.6	95.4
160	93.8	93.8	93.8	94.8	94.9	94.8	95.6	95.8	95.6
200-375	94.0	94.0	94.0	95.0	95.1	95.0	95.8	96.0	95.8

Efficiency classes for 50Hz in accordance with IEC 60034-30:2008

Send Quote Requests to info@automatedpt.com
Call +1(800)985-6929 To Order or Order Online At Nordgearmotors.com

Motor Efficiency Ratings

European Motor Efficiencies 60Hz

Efficiency Classes of IE1, IE2, and IE3 motors									
Motor Power [kW]	IE1, 60Hz			IE2, 60HZ			IE3, 60Hz		
	2 pole	4 pole	6 pole	2 pole	4 pole	6 pole	2 pole	4 pole	6 pole
0.75	77.0	78.0	73.0	75.5	82.5	80.0	77.0	85.5	82.5
1.1	78.5	79.0	75.0	82.5	84.0	85.5	84.0	86.5	87.5
1.5	81.0	81.5	77.0	84.0	84.0	86.5	85.5	86.5	88.5
2.2	81.5	83.0	78.5	85.5	87.5	87.5	86.5	89.5	89.5
3.7	84.5	85.0	83.5	87.5	87.5	87.5	88.5	89.5	89.5
5.5	86.0	87.0	85.0	88.5	89.5	89.5	89.5	91.7	91.0
7.5	87.5	87.5	86.0	89.5	89.5	89.5	90.2	91.7	91.0
11	87.5	88.5	89.0	90.2	91.0	90.2	91.0	92.4	91.7
15	88.5	89.5	89.5	90.2	91.0	90.2	91.0	93.0	91.7
18.5	89.5	90.5	90.2	91.0	92.4	91.7	91.7	93.6	93.0
22	89.5	91.0	91.0	91.0	92.4	91.7	91.7	93.6	93.0
30	90.2	91.7	91.7	91.7	93.0	93.0	92.4	94.1	94.1
37	91.5	92.4	91.7	92.4	93.0	93.0	93.0	94.5	94.1
45	91.7	93.0	91.7	93.0	93.6	93.6	93.6	95.0	94.5
55	92.4	93.0	92.1	93.0	94.1	93.6	93.6	95.4	94.5
75	93.0	93.2	93.0	93.6	94.5	94.1	94.1	95.4	95.0
90	93.0	93.2	93.0	94.5	94.5	94.1	95.0	95.4	95.0
110	93.0	93.5	94.1	94.5	95.0	95.0	95.0	95.8	95.8
150	94.1	94.5	94.1	95.0	95.0	95.0	95.4	96.2	95.8
185-375	94.1	94.5	94.1	95.4	95.4	95.0	95.8	96.2	95.8

Efficiency classes for 60Hz in accordance with IEC 60030-30:2008

Send Quote Requests to info@automatedpt.com
Call +1(800)985-6929 To Order or Order Online At Nordgearmotors.com

Notes

Send Quote Requests to info@automatedpt.com
Call +1(800)985-6929 To Order or Order Online At Nordgearmotors.com

Motor Dimensions

Motors Dimensions

- IG, F, IGF Option Motor Dimensions
- IG, F, IGF Option Brakemotor Dimensions
- HR, MS Dimensions
- MG Dimensions
- WE, RD, RDD Motor Dimensions
- WE, RD, RDD Brakemotor Dimensions
- Conduit Box & Cable Entry Dimensions
- Connection Diagrams

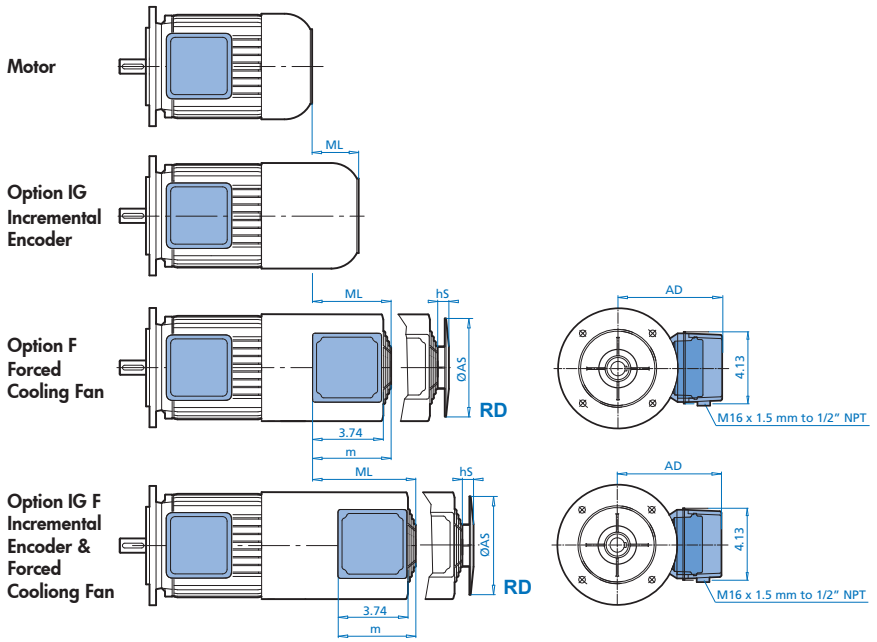

NORD DRIVESYSTEMS

www.nord.com

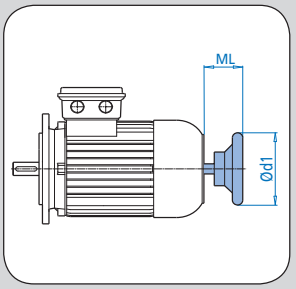

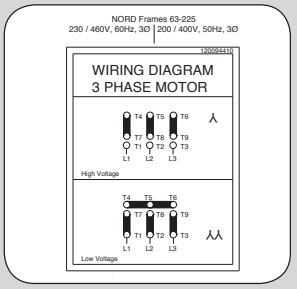

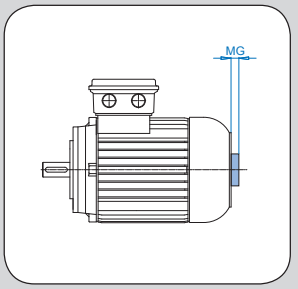

INVERTER DUTY MOTOR

IG, F, IGF Option Motor Dimensions

NORD DRIVESYSTEMS

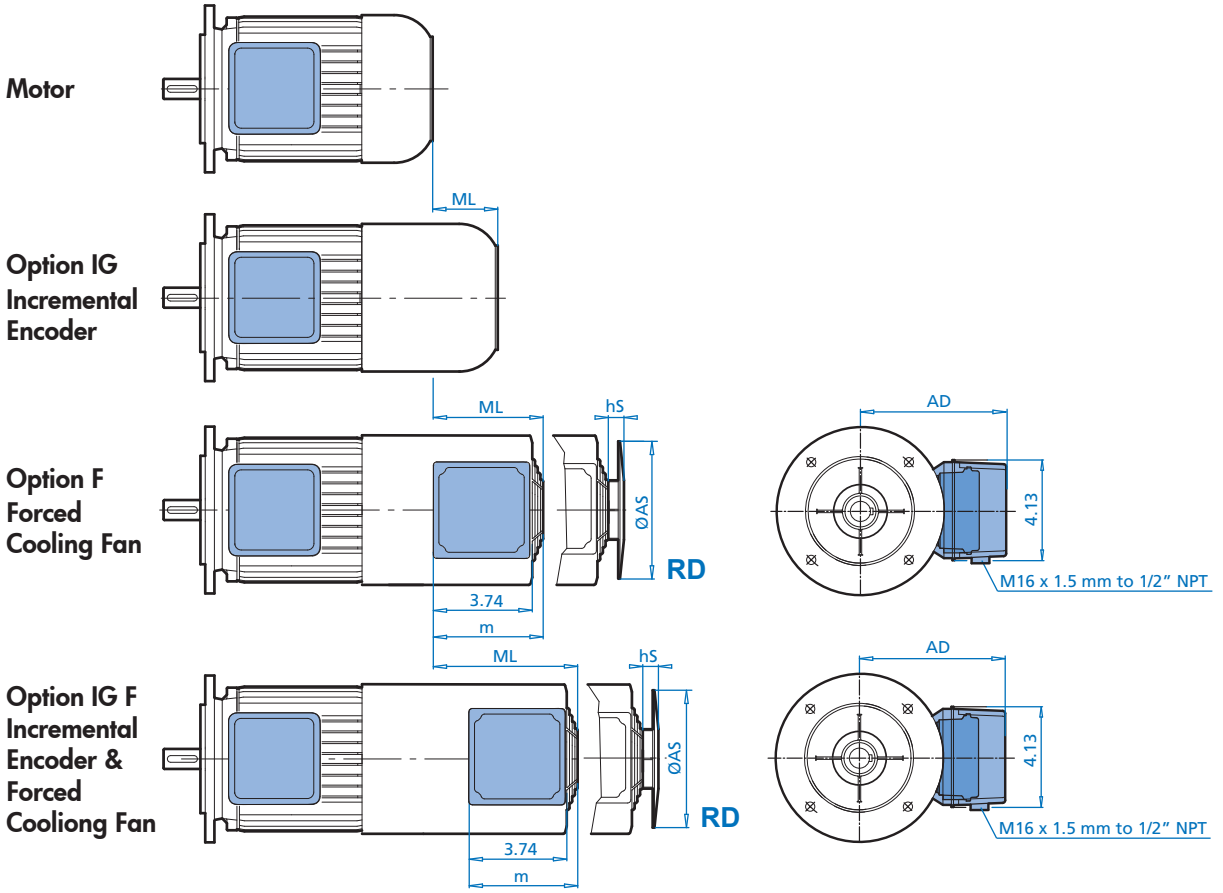

Motor Frame Size	Efficiency			IG	F					IG F				
	SE	EE	PE	ML	ML	AS	hS	AD	m	ML	AS	hS	AD	m
63	S/L	-	-	2.17	3.46	5.24	1.46	4.49	4.21	6.22	5.24	1.46	4.49	4.21
71	S/L	-	-	2.20	3.50	5.91	1.46	4.84	4.21	5.67	5.91	1.46	4.84	4.21
80	S/L	LH	-	2.40	3.54	6.69	1.57	5.20	4.21	5.51	6.69	1.57	5.20	4.21
90	S/L	SH/LH	SP/LP	2.83	4.09	7.40	1.18	5.59	4.61	5.87	7.40	1.18	5.59	4.61
100	L	LH	LP	2.72	3.74	8.27	1.10	5.94	4.61	6.10	8.27	1.10	5.94	4.61
112	-	SH/LH	-	2.68	3.90	9.80	1.30	6.42	4.61	5.87	9.80	1.30	6.42	4.61
112	M	MH	MP	2.68	3.90	9.80	1.30	6.42	4.61	5.87	9.80	1.30	6.42	4.61

* Not available with NEMA dimensioned motors.

Send Quote Requests to info@automatedpt.com
Call +1(800)985-6929 To Order or Order Online At Nordgearmotors.com

IG, F, IGF Option Brakemotor Dimensions

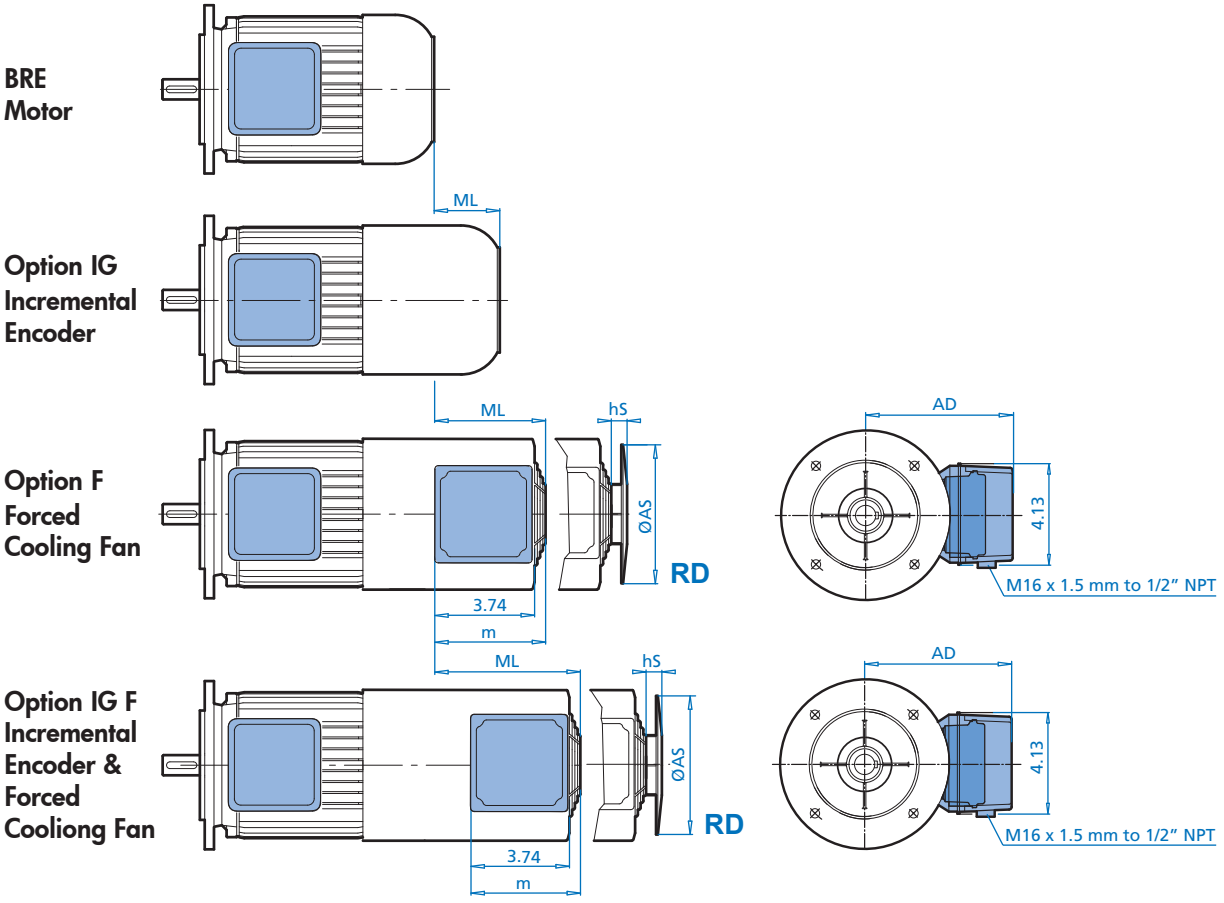

Motor Frame Size	Efficiency			IG	F					IG F				
	SE	EE	PE	ML	ML	AS	hS	AD	m	ML	AS	hS	AD	m
63	S/L	-	-	2.44	3.54	5.24	1.46	4.49	4.21	4.92	5.24	1.46	4.49	4.21
71	S/L	-	-	2.91	3.70	5.91	1.46	4.84	4.21	5.47	5.91	1.46	4.84	4.21
80	S/L	LH	-	2.24	3.54	6.69	1.57	5.20	4.21	5.51	6.69	1.57	5.20	4.21
90	S/L	SH/LH	SP/LP	2.76	3.94	7.40	1.18	5.59	4.61	5.71	7.40	1.18	5.59	4.61
100	L	LH	LP	2.76	4.13	8.27	1.10	5.94	4.61	5.51	8.27	1.10	5.94	4.61
112	-	SH/LH	-	2.52	4.13	9.80	1.30	6.42	4.61	5.51	9.80	1.30	6.42	4.61
112	M	MH	MP	2.52	4.13	9.80	1.30	6.42	4.61	5.51	9.80	1.30	6.42	4.61

* Not available with NEMA dimensioned motors.

Send Quote Requests to info@automatedpt.com
Call +1(800)985-6929 To Order or Order Online At Nordgearmotors.com

HR, MS Option Dimensions

NORD DRIVESYSTEMS

Option HR

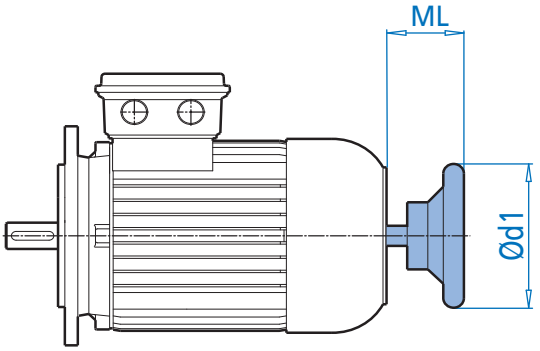

Option MS

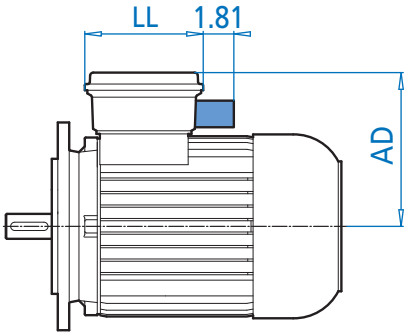

MOTORS

Standard Motor

Motor Frame Size	Efficiency			HR		MS	
	SE	EE	PE	ML	d1	LL	AD
63	S/L	-	-	1.54	3.94	4.49	5.51
71	S/L	-	-	1.57	3.94	4.49	5.87
80	S/L	SH/LH	LP	1.93	3.94	4.49	6.22
90	S (B3)	-	-	1.65	6.30	4.49	6.42
90	S/L	SH/LH	SP/LP	2.64	6.30	4.49	6.42
100	L/LA	LH/AH	LP/AP	2.99	6.30	4.49	6.85
112	-	SH/LH	-	2.91	6.30	4.49	7.24
112	M	MH	MP	2.91	6.30	4.49	7.24

*** Not available with NEMA dimensioned motors.**

Brakemotor

Motor Frame Size	Efficiency			HR		MS	
	SE	EE	PE	ML	d1	LL	AD
63	S/L	-	-	1.69	3.94	4.49	5.51
71	S/L	-	-	1.69	3.94	4.49	5.87
80	S/L	SH/LH	LP	1.97	3.94	4.49	6.22
90	S (B3)	-	-	1.30	6.30	4.49	6.42
90	S/L	SH/LH	SP/LP	2.28	6.30	4.49	6.42
100	L/LA	LH/AH	LP/AP	3.15	6.30	4.49	6.85
112	-	SH/LH	-	3.03	6.30	4.49	7.24
112	M	MH	MP	3.03	6.30	4.49	7.24

*** Not available with NEMA dimensioned motors.**

Send Quote Requests to info@automatedpt.com
Call +1(800)985-6929 To Order or Order Online At Nordgearmotors.com

MG Option Dimensions

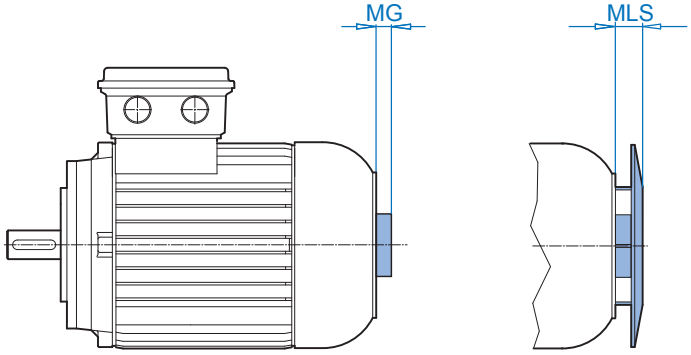

Option MG

MG With Cover

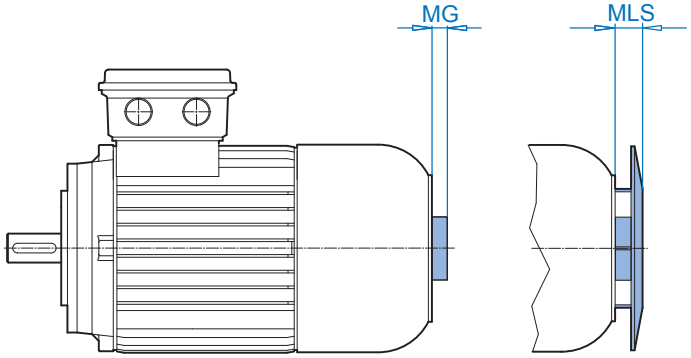

Option MG BRE

Brakemotor
MG With Cover

Motor Frame Size	Efficiency			MG		BRE + MG	
	SE	EE	PE	MG	MLS	BRE + MG	BRE + MLS
63	S/L	-	-	0.43	0.87	0.59	1.02
71	S/L	-	-	0.47	0.91	0.67	1.10
80	S/L	SH/LH	LP	0.39	0.75	0.47	0.83
90	S/L	SH/LH	SP/LP	0.55	0.91	0.51	0.87
100	L/LA	LH/AH	LP/AP	0.51	0.83	0.51	0.87
112	-	SH/LH	-	0.47	0.83	0.51	0.87
112	M	MH	MP	0.47	0.83	0.51	0.83

Send Quote Requests to info@automatedpt.com
Call +1(800)985-6929 To Order or Order Online At Nordgearmotors.com

WE, RD, RDD Option Motor Dimensions

NORD DRIVESYSTEMS

MOTORS

Standard Motor

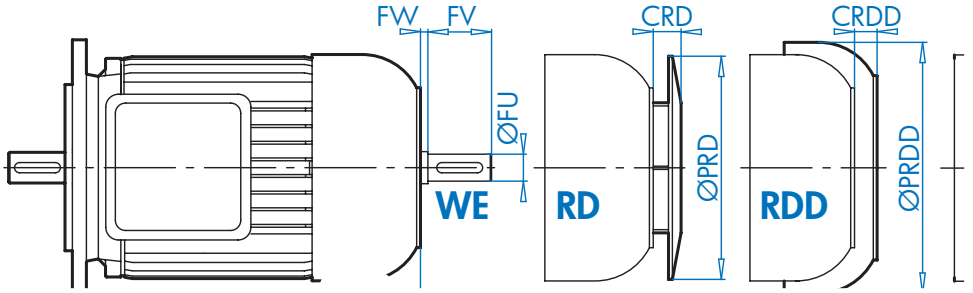

Motor Frame Size	Efficiency			WE								RD		RDD	
	SE	EE	PE	DA	GC	CW	EA	FW	DC	EC	FA	ØAS	DS	ØAO	DO
				[mm]								[in]			
63	S/L	-	-	11	12.5	23	23	0	M4	16	4	4.84	0.43	6.02	1.06
71	S/L	-	-	11	12.5	24	23	1	M4	16	4	5.43	0.43	6.65	0.94
80	S/L	SH/LH	LP	14	16.0	33	30	3	M5	20	5	6.14	0.59	7.20	1.22
90	S/L	SH/LH	SP/LP	19	21.5	47	40	7	M6	32	6	6.93	0.59	7.91	1.22
100	L/LA	LH/AH	LP/AP	24	27.0	56	50	6	M8	40	8	7.64	0.59	8.86	1.10
112	-	SH/LH	-	24	27.0	54	50	4	M8	40	8	8.58	0.59	10.43	1.50
112	M	MH	MP	24	27.0	54	50	4	M8	40	8	8.58	0.59	10.16	1.50

Send Quote Requests to info@automatedpt.com
Call +1(800)985-6929 To Order or Order Online At Nordgearmotors.com

WE, RD, RDD Option Brakemotor Dimensions

Standard BRE

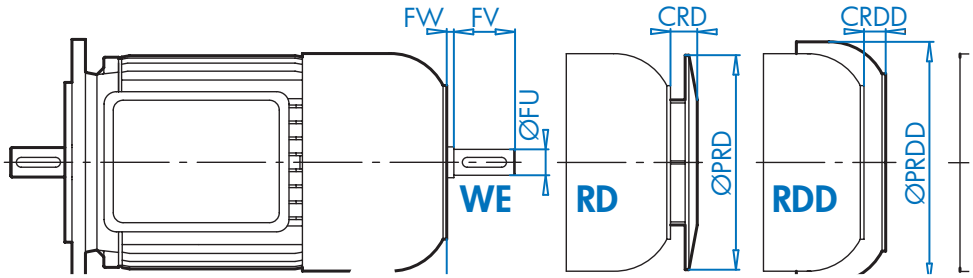

MOTORS

Motor Frame Size	Efficiency			WE								RD		RDD	
	SE	EE	PE	DA	GC	CW	EA	FW	DC	EC	FA	ØAS	DS	ØAO	DO
				[mm]								[in]			
63	S/L	-	-	11	12.5	27	23	4	M4	16	4	4.84	0.43	6.02	1.06
71	S/L	-	-	11	12.5	27	23	4	M4	16	4	5.43	0.43	6.65	0.94
80	S/L	SH/LH	LP	14	16.0	34	30	4	M5	20	5	6.14	0.59	7.20	1.22
90	S/L	SH/LH	SP/LP	19	21.5	48	40	8	M6	32	6	6.93	0.59	7.91	1.22
100	L/LA	LH/AH	LP/AP	24	27.0	60	50	10	M8	40	8	7.64	0.59	8.86	1.10
112	-	SH/LH	-	24	27.0	57	50	7	M8	40	8	8.58	0.59	10.43	1.50
112	M	MH	MP	24	27.0	57	50	7	M8	40	8	8.58	0.59	10.16	1.50

Send Quote Requests to info@automatedpt.com
Call +1(800)985-6929 To Order or Order Online At Nordgearmotors.com

Dimensions
Conduit Box & Cable Entry

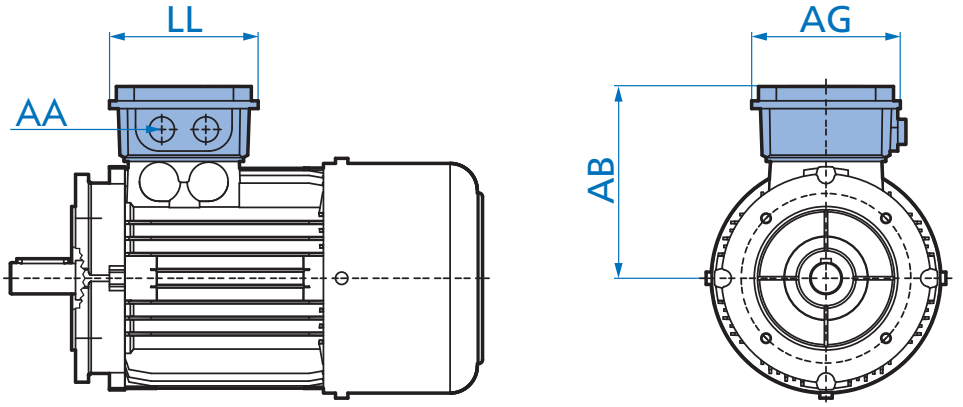

MOTORS

Motor Frame Size	Efficiency			Conduit Box & Cable Entry				
	SE	EE	PE	AD	AG	LL	O	Conduit Adapter
63	S/L	-	-	4.53	3.94	3.94	M20 X 1.5	1/2" NPT
71	S/L	-	-	4.88	3.94	3.94	M20 X 1.5	1/2" NPT
80	S/L	SH/LH	LP	5.59	4.49	4.49	M25 X 1.5	3/4" NPT
90	S/L	SH/LH	SP/LP	5.79	4.49	4.49	M25 X 1.5	3/4" NPT
100	L/LA	LH/AH	LP/AP	6.65	4.49	4.49	M32 X 1.5	1" NPT
112	-	SH/LH	-	7.05	4.49	4.49	M32 X 1.5	1" NPT
112	M	MH	MP	7.05	4.49	4.49	M32 X 1.5	1" NPT

Brakemotor Frame Size	Efficiency			Conduit Box & Cable Entry				
	SE	EE	PE	AD	AG	LL	O	Conduit Adapter
63	S/L	-	-	4.84	3.50	5.28	M20 X 1.5	1/2" NPT
71	S/L	-	-	5.20	3.50	5.28	M20 X 1.5	1/2" NPT
80	S/L	SH/LH	LP	5.59	4.25	6.02	M25 X 1.5	3/4" NPT
90	S/L	SH/LH	SP/LP	5.79	4.25	6.02	M25 X 1.5	3/4" NPT
100	L/LA	LH/AH	LP/AP	6.77	4.25	6.02	M32 X 1.5	1" NPT
112	-	SH/LH	-	7.17	4.25	6.02	M32 X 1.5	1" NPT
112	M	MH	MP	7.17	4.25	6.02	M32 X 1.5	1" NPT

Send Quote Requests to info@automatedpt.com
Call +1(800)985-6929 To Order or Order Online At Nordgearmotors.com

Connection Diagrams

Connection Diagrams

NORD Frames 63-225
230 / 460V, 60Hz, 3Ø | 200 / 400V, 50Hz, 3Ø

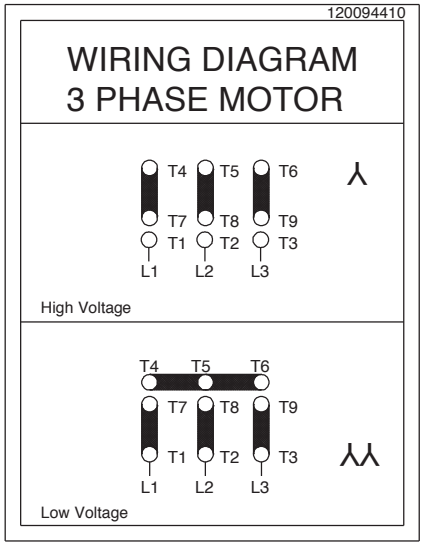

NORD mfg by Siemens - Frames 200 +
230 / 460V, 60Hz, 3Ø | 200 / 400V, 50Hz, 3Ø
190 / 380V, 60Hz, 3Ø

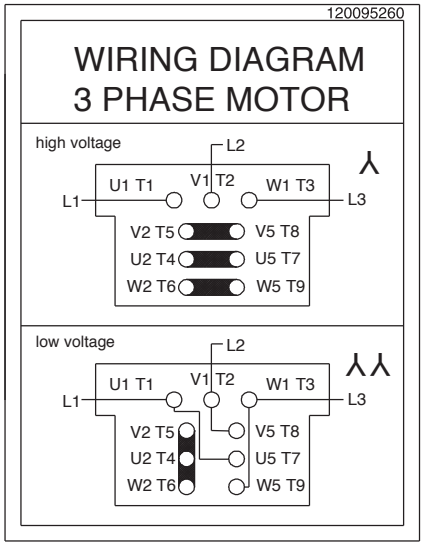

NORD mfg by Siemens - Frames 200 +
230 / 460V, 60Hz, 3Ø | 200 / 400V, 50Hz, 3Ø
190 / 380V, 60Hz, 3Ø

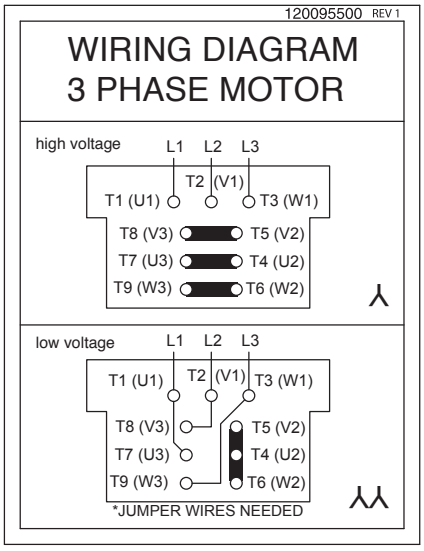

NORD Frames 63 - 225
460 / 800V, 60Hz, 3Ø | 230 / 400V, 50Hz, 3Ø
208 / 360V, 60Hz, 3Ø | 400 / 690V, 50Hz, 3Ø
332 / 575V, 60Hz, 3Ø

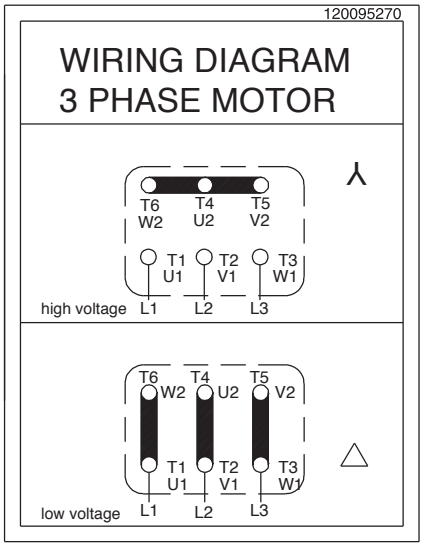

NORD - 2 - SPEED MOTORS
SINGLE WINDING (4-2 & 8-4 POLE)

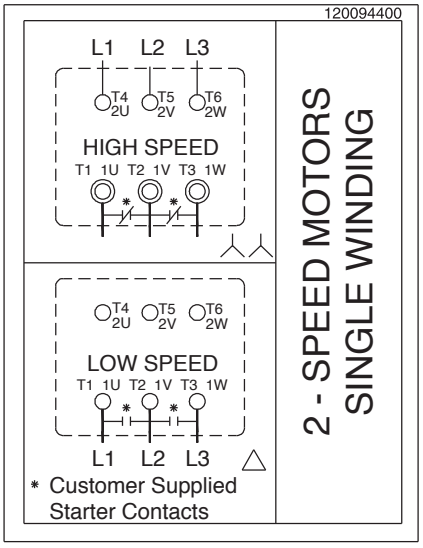

NORD - 2 - SPEED MOTORS
DUAL WINDING (8-2 POLE)

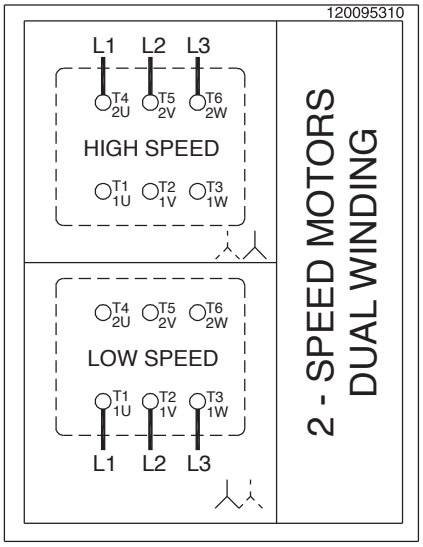

MOTORS

Send Quote Requests to info@automatedpt.com
Call +1(800)985-6929 To Order or Order Online At Nordgearmotors.com

Connection Diagrams

Connection Diagrams

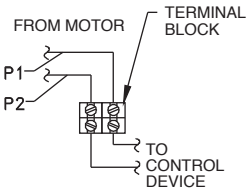

* MAX. OPERATING VOLTAGE 2.5V.
* SWITCH TEMP. 155°C
* RESPONSE TIME < 5 SECONDS

THERMISTOR
"TF" OPTION

120095240

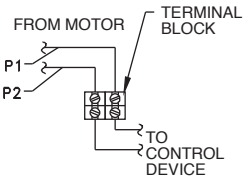

* NC (NORMALLY CLOSED)
* CONTACTS RATED 1.6A AT 2.50 VAC
* 6-500 VAC WORKING RANGE
* AUTOMATIC RESET AT 30 ± 15°C TEMP. DROP

THERMISTATS
"TW" OPTION

120095230

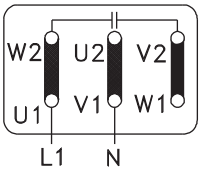

1 PHASE
115V*
50/60 Hz

* CAPACITOR IS SUPPLIED

BLOWER COOLING FAN
"FC" OPTION

120095450

OPTION "F" 1 PH

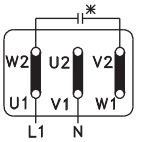

230V
50 / 60 Hz

* CAPACITOR IS SUPPLIED

OPTION "F" 3 PH

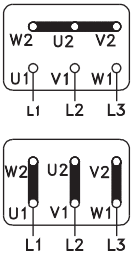

⋏
380-575V
50 / 60 Hz

△
220-332V
50 / 60 Hz

BLOWER COOLING FAN
"F" OPTION

120095250

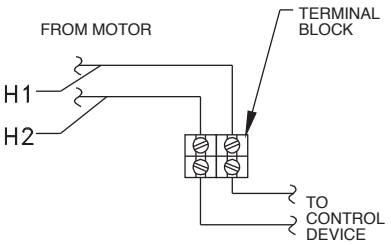

SPACE HEATER
"SH" OPTION

120095220

Send Quote Requests to info@automatedpt.com
Call +1(800)985-6929 To Order or Order Online At Nordgearmotors.com

Send Quote Requests to info@automatedpt.com
Call +1(800)985-6929 To Order or Order Online At Nordgearmotors.com

Brakes

- Operation
- Selection-Torque
- Mechanical Options
- Rectifiers
- Selection-Performance
- Connection Diagrams

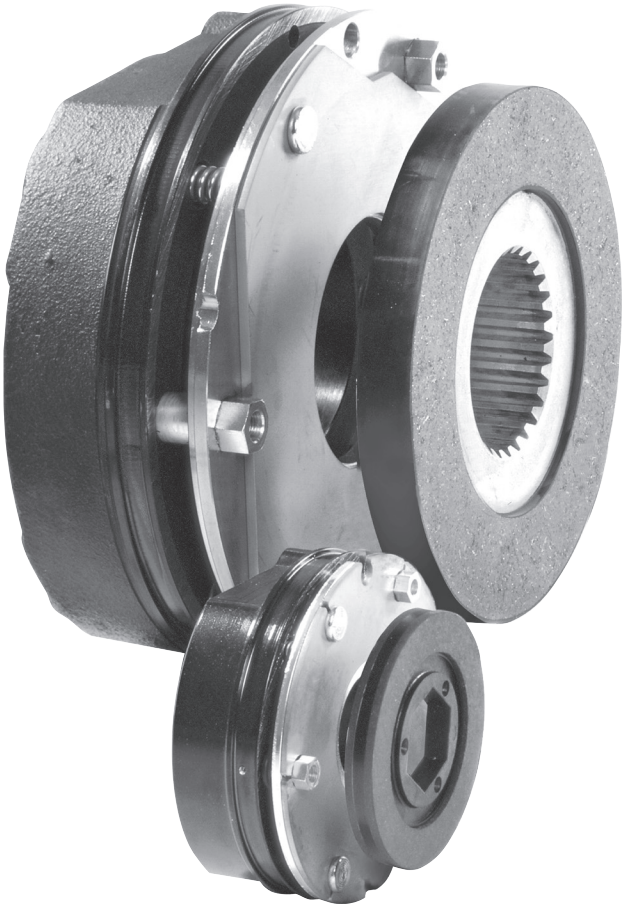

NORD®
DRIVESYSTEMS

www.nord.com

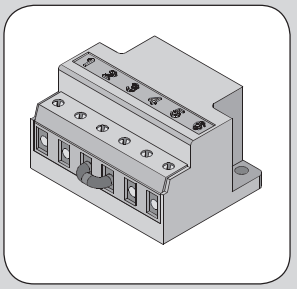

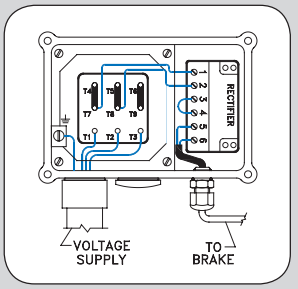

Send Quote Requests to info@automatedpt.com
Call +1(800)985-6929 To Order or Order Online At Nordgearmotors.com

Send Quote Requests to info@automatedpt.com Call +1(800)985-6929 To Order or Order Online At Nordgearmotors.com

General Information

Motor Brake (Option BRE)

The standard NORD motor brake is spring-set when power is removed from the BRE circuit (power-off). The brake coil utilizes a DC voltage supplied through a rectified power source.

Advantages

- Each NORD motor frame size has a number of brake sizes available, with different torque capacities.
- Brake torque adjustments are possible by changing the brake spring combinations. In addition, brake sizes from 5-40 Nm (3.7-30 lb-ft) are typically supplied with an additional spanner-nut adjustment on the back of the brake.
- NORD brakes provide a high degree of safety because when power is removed the brake will automatically set to hold the load.
- The brake rotor or brake disc is environmentally safe and asbestos-free.
- The connection between the rectifier and the brake coil is completed at the factory and the brake air-gap is factory-set but can be adjusted in the event of wear.

Basic Brake Operation

The standard NORD motor brake is “spring set”. When power is removed and the brake is de-energized (power-off), the brake springs exert a force against the armature plate in turn preventing the brake rotor (or brake disc) from rotating. When the brake coil is energized (power-on), a magnetic field pulls the armature plate across the air gap to the brake casing, which releases the brake rotor and allows the motor shaft to rotate.

NORD brakes are DC voltage brakes and in most instances are supplied with a motor mounted brake rectifier for easy connections to AC power. AC power is taken directly form the power line or from the terminal block of the motor and converted to DC by the supplied rectifier.

IMPORTANT NOTE

If the motor is connected to a frequency inverter, soft start, or is a two-speed motor, the AC power must be supplied separately to the brake rectifier.

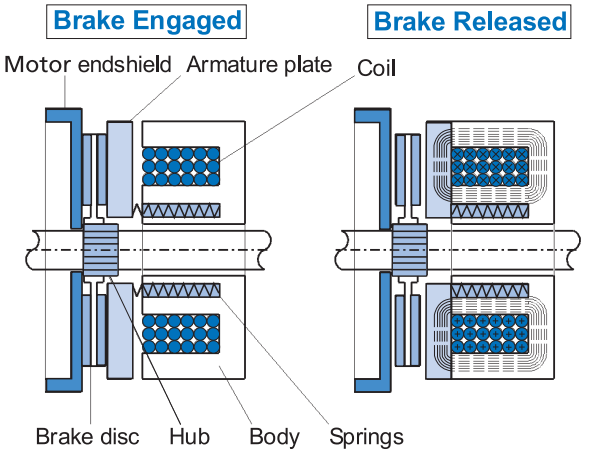

Brake Selection

The selection of a motor brake system is broken down into five phases. The selection of the braking torque, the selection of the braking times (release times and setting times), the selection of the electrical supply and connection, the selection of brake options, and the final phase is the verification of the permissible brake work.

Each NORD motor may be supplied with a number of brake torque sizes. Each brake may be adjusted to different brake torque values. (pages 271 - 272)

Selection steps

1) Brake torque selection (page 271)
2) Brake times & electrical selection (page 273)
3) Electrical supply and connection (page 274 & 295-305)
4) Brake options (page 277)
5) Brake work verification (page 294)

BRAKES

Send Quote Requests to info@automatedpt.com
Call +1(800)985-6929 To Order or Order Online At Nordgearmotors.com

NORD DRIVESYSTEMS

Brake Torque Selection

Brake Torque Selection

Each NORD motor size has a number of brake torque sizes available. The BRE value in the table below is the standard brake torque size for each motor.

Example for ordering: SK 32 - S/4 **BRE10**

(**BRE 10** indicates a brake torque size of 10 Nm)

General Selection Considerations

NORD relies on the equipment builder to specify appropriate brake sizing for their application, while giving consideration to the following:

- For most applications, we advise sizing the brake to 1.5 - 2 times the motor rated torque.
- For vertical applications, it may be advisable to size the brake size up to 3 times the motor rated torque.
- For some applications, it may be necessary to specify a reduced brake torque setting to prevent excessive peak load conditions developed at the reducer output.
- On travel drive applications, excessive brake torque may lead to wheel skid; in addition on crane applications excess hoist-cable swing can result.

Motor Size & Efficiency				Brake Size and Torque					
Frame Size	SE	EE	PE		BRE5	BRE10	BRE20	BRE40	BRE60
				Nm	5	10	20	40	60
				lb-in	44	89	177	354	531
				lb-ft	3.7	7.4	14.8	29.5	44.3
63	S/L				Std.	Opt. * #			
71	S/L				Std.	Opt. *			
80	S	SH			Std.	Opt.	Opt. *		
80	L	LH	LP		Opt.	Std.	Opt. *		
90	S	SH	SP			Opt.	Std.	Opt.	
90	L	LH	LP			Opt.	Std.	Opt.	
100	L	LH	LP				Std.	Opt.	Opt. #
100	LA	AH	AP				Opt.	Std.	Opt. #
112		SH					Opt.	Std.	Opt.
112	M	MH	MP				Opt.	Opt.	Std.
Weight		kg			2	3	5.5	7	10
		lb			4.4	6.6	12.1	15.4	22
Inertia		kg-m² x 10^{-3}			0.015	0.045	0.153	0.45	0.86
		lb-ft² x 10^{-3}			0.356	1.068	3.63	10.68	20.4

* IP66 brake not possible
\# Manual brake release option not possible

Std - Standard Offering
Opt - Optional Offering

BRAKES

Send Quote Requests to info@automatedpt.com
Call +1(800)985-6929 To Order or Order Online At Nordgearmotors.com

Send Quote Requests to info@automatedpt.com Call +1(800)985-6929 To Order or Order Online At Nordgearmotors.com

Brake Torque Selection

NORD DRIVESYSTEMS

CAUTIONS

- **Brake torque -** The brake torque is measured with a mean friction radius of the brake pad surface with a circumferential speed of 1m/sec (197 fpm).
- **Brake torque tolerance -** For different applications and operating conditions, brake torque can vary from +40/-20% compared to the rated brake torque.
- **Hoisting (lifting/lowering) applications -** must have the brake wired for fast response (DC-switching)
- **Initial operation & wear-in period -** In new condition,the brake will have a reduced torque of up to 30%. In order to achieve full rated brake torque, a short run-in period is required. The run in time will vary depending on system loads.
- **The brake rotor or brake pad -** must be protected against foreign matter, oil and grease. Contaminants of this type can greatly influence wear and reduce breaking torque.

Brake Torque Adjustment

Brake torque adjustments are possible by changing the brake spring combinations or by removing springs.

Brake Torque Reduction - Spring Removal

"Brake Size"	7 Springs		5 Springs		3 Springs	
	[Nm]	[lb-ft]	[Nm]	[lb-ft]	[Nm]	[lb-ft]
BRE 5	5	3.7	3.5	2.6	2	1.5
BRE10	10	7.4	7	5.2	4	3.0
BRE20	20	14.8	14	10.3	8	5.9
BRE40	40	29.5	28	20.7	17	12.5
BRE60	60	44.3	43	31.7	26	19.2

When adjusting the brake torque, start by removing the outer springs at opposite corners to prevent uneven brake wear.

On brake sizes 5-150 Nm (3.7-111 lb-ft) full brake torque is achieved with all (7) springs. The brake springs are placed in such a manner where there are (3) inner and (4) outer springs.

Spanner Nut Adjustment

"Brake Size"	Torque Reduction*		Max. Turns	Minimum Torque✹	
	[Nm]	[lb-ft]		[Nm]	[lb-ft]
BRE 5	0.2	0.15	6	0.8	0.59
BRE10	0.2	0.15	12	1.6	1.18
BRE20	0.3	0.22	12	4.4	3.25
BRE40	1	0.74	9	8.0	5.90

✹ With the minimum number of springs and maximum number of turns to the spanner nut.
* Per each turn of the spanner nut

In addition, brake sizes from 5-40 Nm (3.7-30 lb-ft) are typically supplied with a threaded adjustment nut or spanner nut. Additional fine torque adjustment can be made by unscrewing the spanner nut a number of turns or "clicks" with a spanner wrench.

BRAKES

Send Quote Requests to info@automatedpt.com
Call +1(800)985-6929 To Order or Order Online At Nordgearmotors.com

Send Quote Requests to info@automatedpt.com Call +1(800)985-6929 To Order or Order Online At Nordgearmotors.com

Brake Times & Electrical Selection

Brake Times & Electrical Selection

Brake timing performance is critical in selecting the optimal brake system. NORD brakes can provide exceptional performance in terms of the release (start) times and engagement (stop) times. Use the following guidelines in order to select the correct brake control components and connections.

1) Determine if the brake needs to be wired directly from the motor terminal block or powered by a separate source.

- If you are using a frequency inverter, soft-start or a two speed motor you will need to supply the rectifier from.
- If the motor is powered direct across-the-line the rectifier power can be supplied from the motor's terminal block.

2) What type of performance do I need?

- Is the standard brake performance OK?
- Is a higher performance required for fast brake release or very fast brake stopping?

3) Determine the brake supply voltage and check the rectifier compatibility table on 274

Selection Sugestions

When Fast or Very Fast Stopping is Recommended

Any applications that require quick stops and positive action at stand-still.

Recommended Applications

- conveyors and inclined conveyors
- hoists and lifts
- bulk material handling equipment (bucket elevators, idler conveyor's).

CAUTIONS

- **Hoisting (lifting/lowering) applications** - must have the brake wired for fast response.

When Fast-Release is Recommended (Overexcitation)

Any application that is very high-cycling with frequent starts and stops. These applications require the brake to release very-quickly in order to avoid excessive heat build-up in the AC motor and brake coil.

Recommended Applications

- Index conveyors
- Diverters
- Storage and retrieval crane systems

BRAKES

Power Source	Brake Release (start)	Brake engagement (stop)	Braking Method *	Rectifier
Motor Terminal Block	Standard	Standard (AC switching)	10	GVE/GHE/GUE
	Standard	Fast (DC switching)	15	GVE/GHE/GUE
	Standard	Very Fast (Reduced power holding)	40	GPE/PMG
	Fast (Overexcitation)	Standard (AC switching)	30	GPE/PMG
	Fast (Overexcitation)	Fast (DC switching)	35	GPE/PMG
Separate Power Source	Standard	Standard (AC switching)	20	GVE/GHE/GUE
	Standard	Fast (DC switching)	25	GVE/GHE/GUE
	Standard	Very Fast (Reduced power holding)	55	GPU/PMG
	Fast (Overexcitation)	Standard (AC switching)	45	GPU/PMG
	Fast (Overexcitation)	Fast (DC switching)	50	GPU/PMG

*** Braking methods referenced in connection diagrams on pages 295 - 297**

Rectifier Styles

GV - Full Wave Rectifier (Bridge)
GH - Half Wave Rectifier
GU - Combo Rectifier, Can be connected full or half wave
GPE - Hybrid Rectifier, Full wave then switches to half wave.
PMG - Hybrid Rectifier, Full wave then switches to half wave.
GPU - Hybrid Rectifier, Full wave, then switches to half wave. Has integrated DC Switching via voltage sensing.

Send Quote Requests to info@automatedpt.com
Call +1(800)985-6929 To Order or Order Online At Nordgearmotors.com

Electrical Selection

NORD DRIVESYSTEMS

Brake Rectifier Compatability

Brake Voltage (VAC)	Coil Voltage (VDC)	Braking Method	Rectifier Type	Rectifier P/N	BRE 5	BRE 10	BRE 20	BRE 40	BRE 60	BRE 100	BRE 150	BRE 250	BRE 400	BRE 800
115	105	20	GVE20L	19141000	X	X	X	X	X	X	X			
	105	25	GVE20L	19141000	X	X	X	X	X	X	X			
208	180	10	GVE20L	19141000	X	X	X	X	X	X	X	X	X	
	180	15	GVE20L	19141000	X	X	X	X	X	X	X	X	X	
	180	20	GVE20L	19141000	X	X	X	X	X	X	X	X	X	
	180	25	GVE20L	19141000	X	X	X	X	X	X	X	X	X	
	105	30	GPE20L	19140230	X	X	X	X						
	105	30	PMG500	19140200					X	X	X	X	X	X
	105	35	GPE20L	19140230	X	X	X	X						
	105	35	PMG500	19140200					X	X	X	X	X	X
	180	40	GPE20L	19140230	X	X	X	X	X	X	X			
	180	40	PMG500	19140200								X	X	X
	105	45	GPU20L	19140090	X	X	X	X						
	105	45	PMG500	19140200					X	X	X	X	X	X
	105	50	GPU20L	19140090	X	X	X	X						
	105	50	PMG500	19140200					X	X	X	X	X	X
	180	55	GPU20L	19140090	X	X	X	X	X	X	X			
	180	55	PMG500	19140200								X	X	X
230	105	10	GHE40L	19141010	X	X	X	X	X	X	X			
	205	10	GVE20L	19141000	X	X	X	X	X	X	X	X	X	
	205	10	GUE40V	19140300	X	X	X	X	X	X	X			
	105	15	GHE40L	19141010	X	X	X	X	X	X	X			
	205	15	GVE20L	19141000	X	X	X	X	X	X	X	X	X	
	205	15	GUE40V	19140300	X	X	X	X	X	X	X			
	105	20	GHE40L	19141010	X	X	X	X	X	X	X			
	205	20	GUE40V	19140300	X	X	X	X	X	X	X	X	X	
	205	20	GVE20L	19141000	X	X	X	X	X	X	X			
	105	25	GHE40L	19141010	X	X	X	X	X	X	X			
	205	25	GUE40V	19140300	X	X	X	X	X	X	X	X	X	
	205	25	GVE20L	19141000	X	X	X	X	X	X	X			
	105	30	GPE20L	19140230	X	X	X	X						
	105	30	PMG500	19140200					X	X	X	X	X	X
	105	35	GPE20L	19140230	X	X	X	X						
	105	35	PMG500	19140200					X	X	X	X	X	X
	205	40	GPE20L	19140230	X	X	X	X	X	X	X			
	205	40	PMG500	19140200					X	X	X	X	X	X
	105	45	GPU20L	19140090	X	X	X	X						
	105	45	PMG500	19140200					X	X	X	X	X	X
	105	50	GPU20L	19140090	X	X	X	X						
	105	50	PMG500	19140200					X	X	X	X	X	X
	205	55	GPU20L	19140090	X	X	X	X	X	X	X			
	205	55	PMG500	19140200								X	X	X
	205	55	GPU20	19140090	X	X	X	X	X	X	X			
	205	55	PMG500	19140200								X	X	X

BRAKES

Send Quote Requests to info@automatedpt.com
Call +1(800)985-6929 To Order or Order Online At Nordgearmotors.com

NORD DRIVESYSTEMS

Electrical Selection

Brake Rectifier Compatability

Brake Voltage (VAC)	Coil Voltage (VDC)	Braking Method	Rectifier Type	Rectifier P/N	BRE 5	BRE 10	BRE 20	BRE 40	BRE 60	BRE 100	BRE 150	BRE 250	BRE 400	BRE 800
332	180	30	GPE40L	19140240	X	X	X	X	X	X	X			
	180	30	PMG500	19140200								X	X	X
	180	35	GPE40L	19140240	X	X	X	X	X	X	X			
	180	35	PMG500	19140200								X	X	X
	180	45	GPU40L	19140170	X	X	X	X	X	X	X			
	180	50	GPU40L	19140170	X	X	X	X	X	X	X			
400	180	10	GHE40L	19141010	X	X	X	X	X	X	X			
	180	10	GUE40V	19140300	X	X	X	X	X	X	X			
	180	15	GHE40L	19141010	X	X	X	X	X	X	X			
	180	15	GUE40V	19140300	X	X	X	X	X	X	X			
	180	20	GHE40L	19141010	X	X	X	X	X	X	X			
	180	20	GUE40V	19140300	X	X	X	X	X	X	X			
	180	25	GHE40L	19141010	X	X	X	X	X	X	X			
	180	25	GUE40V	19140300	X	X	X	X	X	X	X			
	180	30	GPE40L	19140240	X	X	X	X	X	X	X			
	180	30	PMG500	19140200								X	X	X
	180	35	GPE40L	19140240	X	X	X	X	X	X	X			
	180	35	PMG500	19140200								X	X	X
	180	45	GPU20L	19140090	X	X	X	X	X	X	X			
	180	45	PMG500	19140200								X	X	X
	180	50	GPU20L	19140090	X	X	X	X	X	X	X			
	180	50	PMG500	19140200								X	X	X
460	205	10	GHE40L	19141010	X	X	X	X	X	X	X	X	X	
	205	10	GUE40V	19140300	X	X	X	X	X	X	X			
	205	15	GHE40L	19141010	X	X	X	X	X	X	X	X	X	
	205	15	GUE40V	19140300	X	X	X	X	X	X	X			
	205	20	GHE40L	19141010	X	X	X	X	X	X	X	X	X	
	205	20	GUE40V	19140300	X	X	X	X	X	X	X			
	205	25	GHE40L	19141010	X	X	X	X	X	X	X	X	X	
	205	25	GUE40V	19140300	X	X	X	X	X	X	X			
	205	30	GPE40L	19140240	X	X	X	X	X	X	X			
	205	30	PMG500	19140200								X	X	X
	205	35	GPE40L	19140240	X	X	X	X	X	X	X			
	205	35	PMG500	19140200								X	X	X
	205	45	GPU40L	19140170	X	X	X	X	X	X	X			
	205	45	PMG500	19140200								X	X	X
	205	50	GPU40L	19140170	X	X	X	X	X	X	X			
	205	50	PMG500	19140200								X	X	X
575	250	10	GHE50L	19141020	X	X	X	X	X	X	X	X	X	
	250	15	GHE50L	19141020	X	X	X	X	X	X	X	X	X	
	250	20	GHE50L	19141020	X	X	X	X	X	X	X	X	X	
	250	25	GHE50L	19141020	X	X	X	X	X	X	X	X	X	

BRAKES

Send Quote Requests to info@automatedpt.com
Call +1(800)985-6929 To Order or Order Online At Nordgearmotors.com

Send Quote Requests to info@automatedpt.com Call +1(800)985-6929 To Order or Order Online At Nordgearmotors.com

Brake Options

NORD DRIVESYSTEMS

Brake Options

Abbreviation	Description	Page
ADJ	**Torque Adjustment** - Brake torque may be adjusted at the factory	272
DBR	**Double Brake (2xBRE)** - Double brakes are used for redundancy and additional safety	280
FBR	**Brass Foil** - Provides a brass foil in the brake air-gap to provide faster braking times	278
FHL	**Locking Hand Release Lever** - Lockable manual hand release lever	277
HL	**Hand Release Lever** - Manual hand release lever	277
HLH	**Hand Release Lever with Hole** - Hand lever with 5.5mm hole	277
IP66	**IP66 Brake Enclosure** - Brake with IP66 enclosure	277
IR	**Current Sensing Relay** - Fast brake engagement (stopping) without external control equipment	279
MIK	**Micro-Switch** - Brake fitted with a micro-switch for sensing the brake state (released or engaged)	278
NRB1	**Quiet Brake Release** - An o-ring is placed between the coil body and the armature plate for noise reduction	278
NRB2	**Quiet Brake Motor Operation** - An o-ring is placed between the carrier hub & the armature plate to prevent clattering.	278
RG	**Corrosion Protected Brake** - Corrosion protected brake	277
SR	**Dust & Corrosion Protected Brake** - Dust & corrosion protected brake	277

Rectifier Options

Abbreviation	Description	Page
Rectifiers	Most NORD brakes are provided with a rectifier that converts AC voltage to DC voltage. Rectifiers are used because most motors are AC powered, but brakes require DC power.	281
G...V	**Sealed Rectifier** - Rectifiers sealed with an electrically safe resin	281
GP...	**High Performance Rectifier** - Improves brake release and stopping times	281
GU...	**Dual Rectifier** - Full/Half-Wave	281
PMG	**High Performance Rectifier** - Improves brake release & stopping times - High current capacity	290

BRAKES

Brake Nomenclature

BRE – –

- Additional Brake Options
- Brake Size/Torque Rating
- Brake

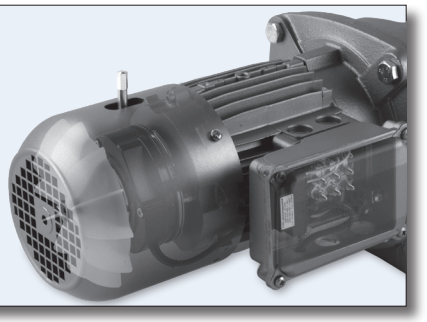

Ordering Examples

BRE 100 HL RG IR

- Current Sensing Relay
- Corrosion Protected Brake
- Hand Release Lever
- 100 Nm Brake Torque
- Brake

Brake, 100 Nm with a hand release lever, corrosion protected brake, and a current sensing relay.

BRE 40 FHL SR

- Dust & Corrosion Prot. Brake
- Locking Hand Release Lever
- 40 Nm Brake Torque
- Brake

Brake, 40 Nm with a locking hand release lever and dust & corrosion protected brake.

Send Quote Requests to info@automatedpt.com
Call +1(800)985-6929 To Order or Order Online At Nordgearmotors.com

Brake Options

Hand Release Lever (HL)

Mod

The hand release option allows the brake to be manually released without requiring that the brake be energized with voltage. The lever has a spring return that allows the brake to be hand released and returned automatically to its set position. The hand release lever can be unscrewed for easy removal.

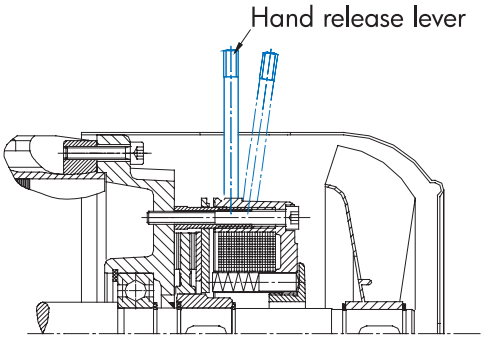

Locking Hand Release Lever (FHL)

Mod

This option allows the brake to be manually released and locked off without requiring voltage to the brake. The lock mechanism prevents the spring from returning the brake to a closed state without manual action by the user. The hand release lever can be unscrewed for easy removal.

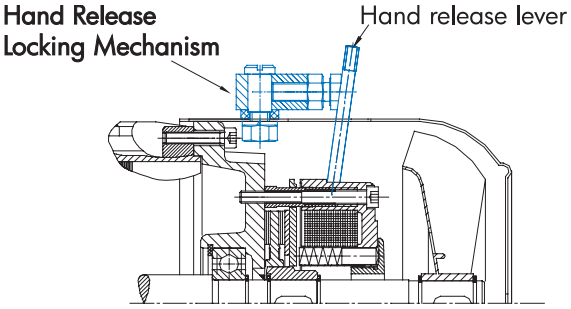

Hand Release Lever With Hole (HLH)

Build

The hand release levers can be provided with a 5.5mm through hole. The hole can be used for attaching external pulling devices such as a cord to release the brake at a distance. This option is available for brake sizes BRE5 to BRE60.

Hand Release Lever Location Required for HL, FHL and HLH

- ❍ Position 1
- ❍ Position 2
- ❍ Position 3
- ❍ Position 4

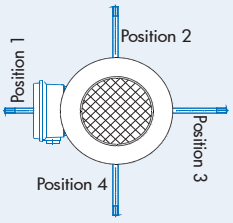

Corrosion Protected Brake (RG)

Build

The brake is fitted with a stainless steel brake plate to provide additional corrosion protection in severe and wet environments.

Dust & Corrosion Protected Brake (SR)

Build

A rubber-sealing boot is installed on the brake to provide additional protection in dusty environments. This feature includes the stainless steel brake plate (RG).

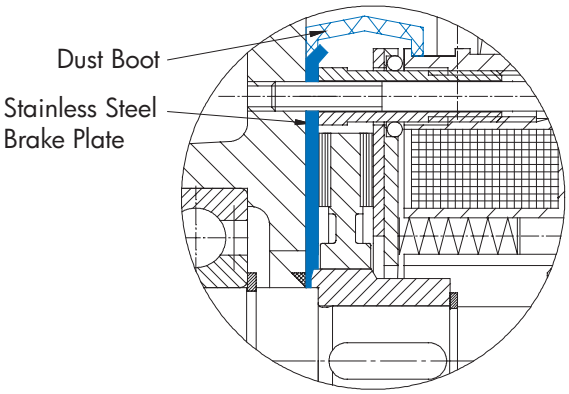

IP66 Brake Enclosure (IP66)

Build

A sealed brake with IP66 enclosure protection can also be provided. This brake has a different mechanical housing that provides a higher degree of protection against severe environments.

Brake Heating

Build

Brakes can be provided with a number of different heating systems. Contact NORD to discuss the details of your application

BRAKES

Send Quote Requests to info@automatedpt.com
Call +1(800)985-6929 To Order or Order Online At Nordgearmotors.com

Send Quote Requests to info@automatedpt.com
Call +1(800)985-6929 To Order or Order Online At Nordgearmotors.com

Brake Options

Quiet Brake Release (NRB1)

Build

To reduce the noise of the brake release, an o-ring can be placed between the brake coil body and the armature plate (stationary disc). The o-ring dampens the impact caused by the armature plate hitting the brake coil body during the release process. When ordering NRB1, the SR (Dust Boot) option is required. The SR option also includes the RG stainless steel corrosion plate.

Quiet Brake Motor Operation (NRB2)

Build

Noise due to vibration in the brake components is possible during motor operation particularly with variable frequency drive or single phase motor operation. To reduce this vibration the brake can be constructed with an o-ring between the brake carrier hub and the brake disc. This o-ring will prevent the clattering caused by the rapid micro speed changes in the motor caused by inverter or single phase operation.

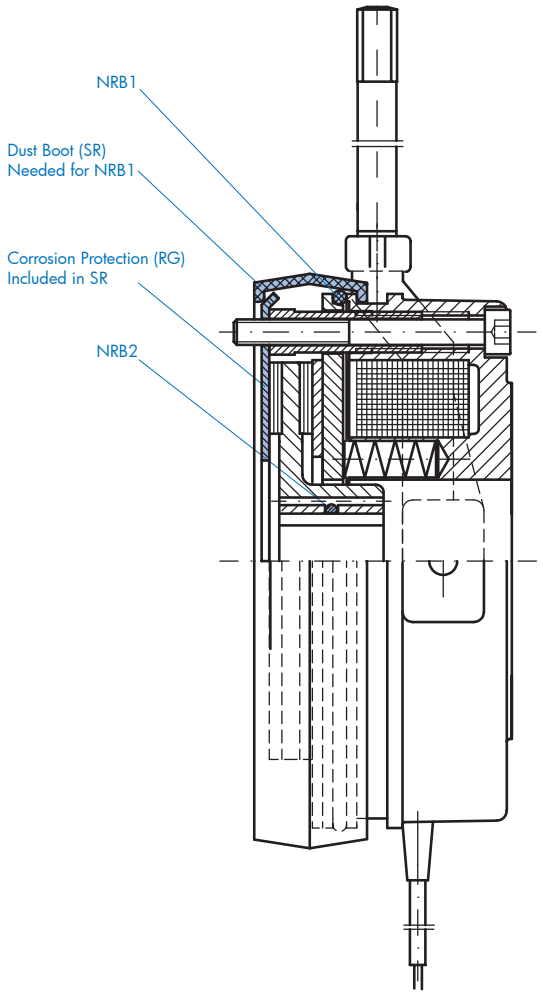

Micro Switch (MIK)

Build

The micro switch monitors the release state of the brake and can be wired into external control circuitry to provide additional safety. The switch can also be used to detect certain brake service problems including excessive brake wear.

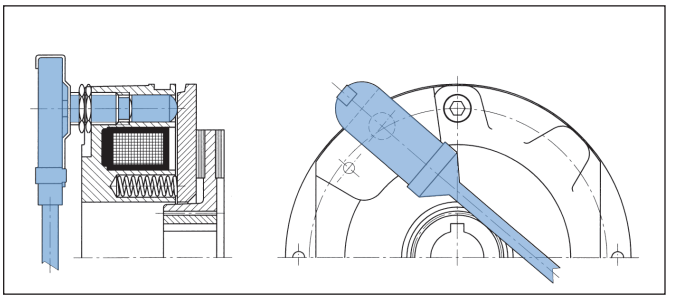

Brass Foil (FBR)

Build

NORD brakes can be fitted with a brass foil in between the armature plate and the brake coil body. The foil acts as a magnetic resistance to weaken the brake coil's magnetic attraction to the armature plate. The weaker magnetic attraction between the armature plate and the brake coil will provide faster brake reaction (stopping) times. The brake release (start) times will be increased. The brass foil is normally used in combination with the fast GP rectifiers in over excitation mode.

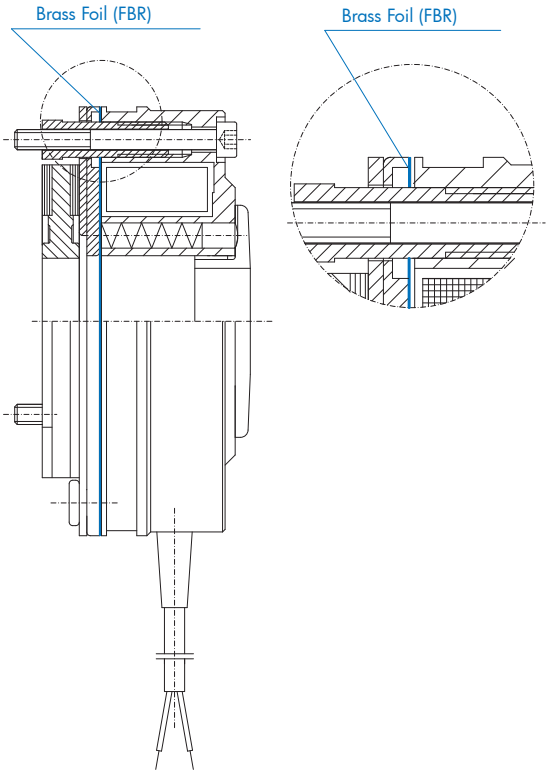

Send Quote Requests to info@automatedpt.com
Call +1(800)985-6929 To Order or Order Online At Nordgearmotors.com

Brake Options

Current Sensing Relay (IR)

Mod

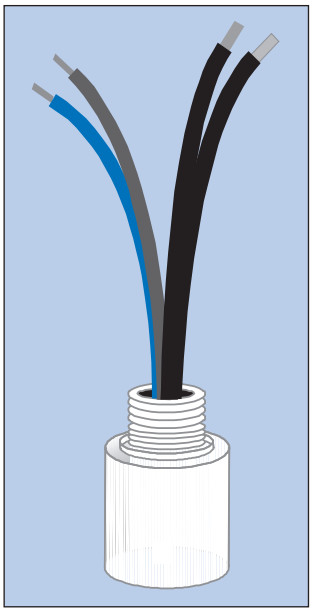

The current sensing relay, is used to achieve a fast brake engagement (stopping) without the use of external control equipment or additional wiring. The relay is mounted directly on the conduit box, and is powered from the motor's terminal block. The power leads for the relay replace one of the brass jumper bars on the terminal block of any single speed motor. The switch leads are connected to terminals 3 and 4 of the rectifier. When the power to the motor is shut off, the IR relay opens the brake circuit on the DC side which allows the brake to de-magnetize quickly.

CAUTIONS

Current Sensing Relay Requirements

- Brake must be powered from the motor's terminal block (not seperately powered)
- Motor must be single speed and should not be powered by a frequency inverter or soft starter.

Part number	18556010	18556020
Reissmann Part Number	RSR 25-46	RSR 50-46
Primary Current Rating (black/white wires)	$25A_{AC}$	$50\ A_{AC}$
Maximum Primary Current (black/white wires)	$75A_{AC}$	$150\ A_{AC}$
Maximum Time at Maximum Primary Current	0.2 s	0.2 s
Maximum Cycles per hour	500	500
Switching Voltage	$42 - 550V_{DC}$	$42 - 550V_{DC}$
Switching Current (red/blue wires)	$1.0\ A_{DC}$	$1.0\ A_{DC}$
Holding Current ❶	$< 0.7\ A_{AC}$	$< 0.7\ A_{AC}$
Delay Time ❷	18 ms	18 ms
Enclosure Rating	IP65	IP65
Ambient Temp.	- 25 to 90 °C (- 40 to 167 °F)	- 25 to 90 °C (- 40 to 167 °F)

❶ Relative to the distortion created by the magnetising current of the motor.

❷ Additional setting time delay added to the DC-setting time of the brake circuit.

IR Relay Wiring Diagram

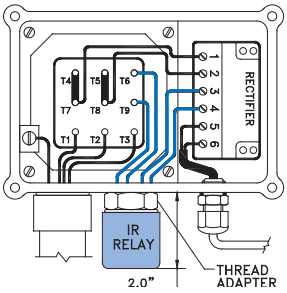

Rectifier			IR-Relay Wires to Rectifier	
Model Type	Part Number	Design	Red	Blue
GVE20L	1914000	Full-wave	4	3
GHE40L	19141010	Half-wave	4	3
GHE50L	19141020	Half-wave	4	3
GPE20L	19140230	Push-hybrid	4	3
GPE40L	19140240	Push-hybrid	4	3
GUE40V	19140300	Dual-wave	4	3

Conduit Box Thread Adapter

Thread	Motor Frame	Part Number	O-Ring
M20	63-71	18542006*	25501615
M25	80-90	18522253	25501615
M32	100-132	18522320	25501615
M40	160-180	18522400 + 18522253	25501615

* Spacer

Send Quote Requests to info@automatedpt.com
Call +1(800)985-6929 To Order or Order Online At Nordgearmotors.com

Brake Options

Double Brakes (DBR)

Build

Some applications require two independent brakes to meet industry safety guidelines.

Double Brakes for Theatrical Applications

Many international standards for braking systems used on theatre hoists mandate the use of brakes that automatically set when power is removed. Redundancy is also required with the system brakes. If one brake fails, the other brake can still operate the system by running independently and parallel to each other. NORD DBR (2xBRE) brake systems are designed to meet these requirements. The NORD double brakes are also designed for quiet operation < 50dB(A).

Some safety standards require that the load brake hold 1.25 times the rated load at test. We recommend selecting the brake for approximately 1.6 to a maximum of 2.0 times the required operating torque for each brake.

The NORD double theatre brakes do not need to be worn-in and will achieve their full braking toque initially.

Two brake rectifiers are required for operating a double brake systems. These will be provided as loose parts and are normally mounted in the customers control panel.

The double brake option will add motor length compared to the single brake.

CAUTIONS

- NORD recommends delayed operation of one of the brakes. If the brakes are operated simultaneously, the combined torques may result in excessive torque for the gear unit or other mechanical system elements. If the brakes are set at the same time even in an E-stop condition, the gear units must be sized to handle this increased torque.

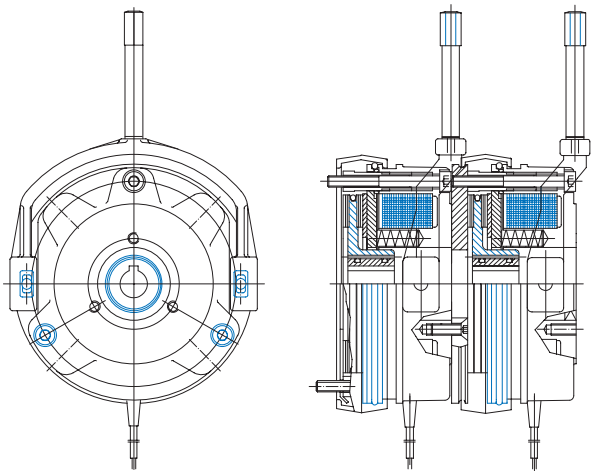

Motor	Brake	7 Springs		5 Springs		4 Springs	
		[Nm]	[lb-ft]	[Nm]	[lb-ft]	[Nm]	[lb-ft]
63S/L	DBR6	2 x 6	2 x 4.4	2 x 4	2 x 3	2 x 3.5	2 x 2.6
71S/L	DBR6	2 x 6	2 x 4.4	2 x 4	2 x 3	2 x 3.5	2 x 2.6
80S	DBR6	2 x 6	2 x 4.4	2 x 4	2 x 3	2 x 3.5	2 x 2.6
80L	DBR12	2 x 12.5	2 x 9.2	2 x 8.5	2 x 6.3	2 x 7	2 x 5.2
90S	DBR12	2 x 12.5	2 x 9.2	2 x 8.5	2 x 6.3	2 x 7	2 x 5.2
90L	DBR25	2 x 25	2 x 18.4	2 x 17.5	2 x 12.9	2 x 14	2 x 10.3
100L	DBR25	2 x 25	2 x 18.4	2 x 17.5	2 x 12.9	2 x 14	2 x 10.3
100LA/4	DBR50	2 x 50	2 x 37	2 x 35	2 x 26	2 x 28	2 x 20.7
112M	DBR50	2 x 50	2 x 37	2 x 35	2 x 26	2 x 28	2 x 20.7

Send Quote Requests to info@automatedpt.com
Call +1(800)985-6929 To Order or Order Online At Nordgearmotors.com

Brake Rectifier Overview

Brake Control Rectifiers

NORD brake control rectifiers convert AC voltage to DC voltage. Rectifiers are used because in many instances AC voltage is used to power the motor, but DC voltage is required to power the brake, and DC power is not typically available. NORD brakemotors typically include a rectifier that is located inside the terminal box. NORD rectifiers can be powered by the motor terminal block, or by a separate power source.

Rectifier Advantages

- Individual power source for each brake.
- Compact size, mounted inside the terminal box.
- Multiple types, voltage options and release/engagement modes available.
- Mountable in a separate control cabinet.
- Integral protection against voltage spikes.

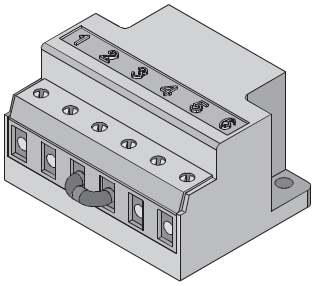

Rectifier Terminals	Description
1, 1a, 1b & 2	Brake Supply AC Voltage
3 & 4	DC-Switching Contact or Jumper
5 & 6	Connection to Brake Coil

Rectifier Nomenclature

G H E 4 0 L

Electronic Protection
L = Varnish coated
V = Encapsulated

Voltage Range
20 = up to 275VAC input
40 = up to 480VAC input
50 = up to 575VAC input

Type of DC Switching
E = External DC-switching (contact)
U = Internal DC-switching (voltage)

Type of Rectifier
H = Half-wave
V = Full-wave (bridge)
P = Push-Hybrid (full & half-wave)
U = Dual (full & half-wave)

Rectifier

Rectifier Protection

Coated Electronics (G...L)

NORD standard rectifiers are provided with each brake motor (except 24 VDC brakes) unless a sealed or high performance rectifier is specified.

Standard Rectifiers

Nomenclature	Part #	Type	Color
GVE20L	19141000	Full-wave	Black
GHE40L	19141010	Half-wave	Yellow
GHE50L	19141020	Half-wave	Grey

Potted Electronics G...V

NORD offers rectifiers that are sealed with an electrically safe resin to ensure that water and moisture will not pass into the rectifier. Sealed rectifiers have the same brake performance ratings as the standard rectifier and can be beneficial if water is present in the motors terminal box.

Sealed Rectifiers

Nomenclature	Part #	Type	Color
GVE20V	19141030	Full-wave	Black
GHE40V	19141040	Half-wave	Yellow
GHE50V	19141050	Half-wave	Grey
GUE40V	19140300	Full/Half-Wave	Black

Rectifier Types

Full-wave rectifier:

The DC output voltage is 90% of the applied input AC voltage.

Half-wave rectifier:

The DC output voltage is 45% of the applied input AC voltage.

Dual Rectifier (Full/Half Wave):

The GUE rectifier is a "dual" rectifier that is either a full-wave or a half-wave rectifier depending on how it is connected. An advantage for using this rectifier is when using it together with a 205 VDC brake coil, it is able to operate on either a 230 VAC or 460 VAC power connection.

Push-Hybrid rectifier (Full/Half Wave):

These rectifiers are designed to switch from an initial full-wave mode to a final half-wave mode. They include GPE, GPU, and PMG rectifier types and are utilized to improve brake performance by providing faster stopping times or shorter brake release times.

Send Quote Requests to info@automatedpt.com
Call +1(800)985-6929 To Order or Order Online At Nordgearmotors.com

Send Quote Requests to info@automatedpt.com
Call +1(800)985-6929 To Order or Order Online At Nordgearmotors.com

Stopping Methods

NORD DRIVESYSTEMS

Stopping Methods

NORD brake rectifiers have the ability to provide different stopping performance. The different performance is achieved by using a different rectifier and/or wiring the rectifier differently. The different methods include:

- **Standard Stopping** (AC Switching)
- **Fast Stopping** (DC Switching)
- **Fast Stopping** (DC Switching via Integrated Voltage Sensing)
- **Very Fast Stopping** (Reduced Power Holding and DC Switching)
- **Very Fast Stopping** (Reduced Power Holding and DC Switching via Integrated Voltage Sensing)

Standard Stopping (AC Switching)

The rectifier can be wired to operate by supplying and removing AC power, commonly called AC switching. The advantage to using AC switching is that the rectifier can be powered directly from the motor's terminal block and no additional wiring is required. However, tapping into the motor's terminal block gives the slower stopping time due to the de-energizing time of the motor's magnetic field. The stopping time can be improved by wiring the rectifier from an external power supply.

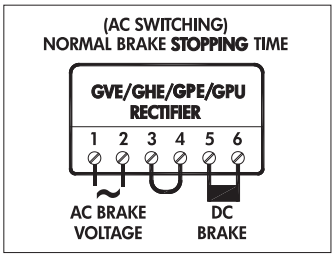

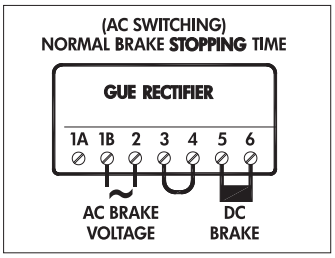

Power Source	Brake Release (start)	Brake engagement (stop)	Braking Method *	Rectifier
Motor Terminal Block	Standard	Standard (AC switching)	10	GVE or GHE
Motor Terminal Block	Fast (Overexcitation)	Standard (AC switching)	30	GPE or PMG 500
Seperate Power Source	Standard	Standard (AC switching)	20	GVE GHE or GUE
Seperate Power Source	Fast (Overexcitation)	Standard (AC switching)	45	GPU or PMG 500

* Braking methods referenced in connection diagrams on pages 295 - 297.

Fast Stopping (DC switching)

DC switching directly interrupts the current flow in the DC circuit of the rectifier. This provides much faster stopping, because you do not need to wait for the motor's magnetic field to de-energize. To implement DC switching, a normally open relay must be installed between terminals 3 and 4 on the rectifier for rectifier types GVE, GHE, and GPE. For GPU type rectifiers simply remove the jumper between terminals 3 & 4 to activate DC switching.

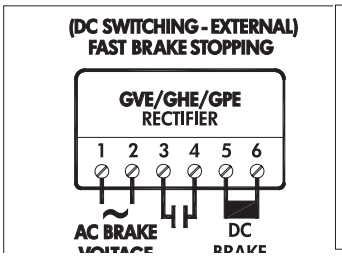

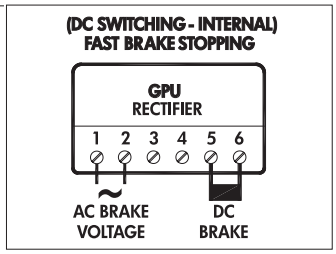

Power Source	Brake Release (start)	Brake engagement (stop)	Braking Method *	Rectifier
Motor Terminal Block	Standard	Fast (DC switching)	15	GVE or GHE
	Fast (Overexcitation)	Fast (DC switching)	35	GPE or PMG 500
Seperate Power Source	Standard	Fast (DC switching)	25	GVE GHE or GUE
	Fast (Overexcitation)	Fast (DC switching)	50	GPU or PMG 500

* Braking methods referenced in connection diagrams on pages 295 - 297.

BRAKES

Send Quote Requests to info@automatedpt.com
Call +1(800)985-6929 To Order or Order Online At Nordgearmotors.com

NORD DRIVESYSTEMS

Stopping Methods

Fast Stopping
(DC switching Via Integrated Voltage Sensing)

Our GPU rectifier's integrate DC-Switching by sensing the AC voltage supplied to the rectifier. When no voltage is present the GPU rectifier automatically opens the DC circuit. The GPU rectifier is primarily designed for use with a separate brake power source, such as inverter powered motors, soft-start motors, and two-speed motors.

The GPU rectifier is primarily designed for use with a separate brake power source, such as inverter powered motors, soft-start motors, and two-speed motors.

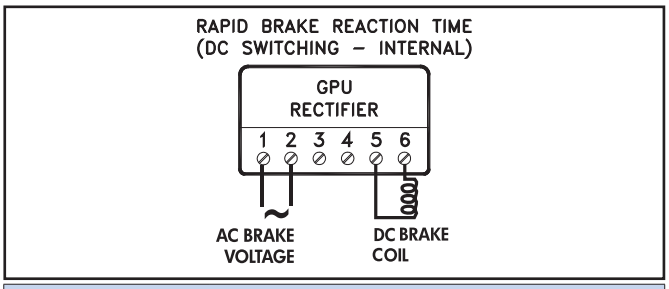

Terminals 1 & 2	-	Brake system connection to AC supply voltage
Terminals 3 & 4	-	No Jumper Connected
Terminals 5 & 6	-	DC Voltage Connection to the brake coil

Power Source	Brake Release (start)	Brake engagement (stop)	Braking Method *	Rectifier
Seperate Power Source	Fast (Overexcitation)	Fast (DC switching)	50	GPU

*** Braking methods referenced in connection diagrams on pages 295 - 297.**

Very Fast Stopping
(DC switching Via Reduced Power Holding)

In reduced power holding, the rectifier initially supplies the rated DC voltage to the brake coil. When voltage is first applied, the rectifier operates as a full-wave rectifier (90% of the applied AC voltage), releasing the brake in the standard time. After the brake is released, the rectifier switches to half-wave mode (45% of the applied DC voltage), weakening the brake's magnetic field. The weaker field will allow the brake to stop more quickly when power is removed. In this method the brake coil is selected as if the brake system is powered by a full-wave rectifier. Therefore, the brake coil's DC-voltage rating should be 90% of the AC voltage applied to the rectifier.

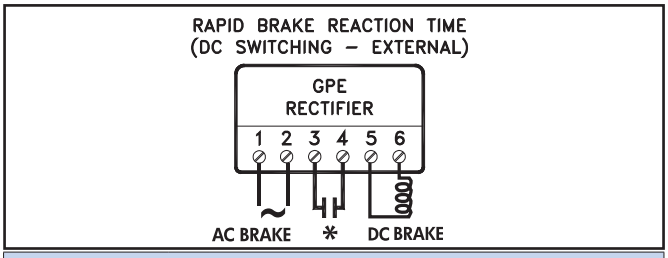

Terminals 1 & 2	-	Brake system connection to AC supply voltage
Terminals 3 & 4	-	Installed Jumper for AC switching or Switch contact (as shown) for DC switching
Terminals 5 & 6	-	DC Voltage Connection to the brake coil

*** The normally open contact/s (NO) is not supplied by NORD. It must close at the same time power is supplied to the brake. The contact must be capable of switching inductive loads and/or be rated IEC AC3.**

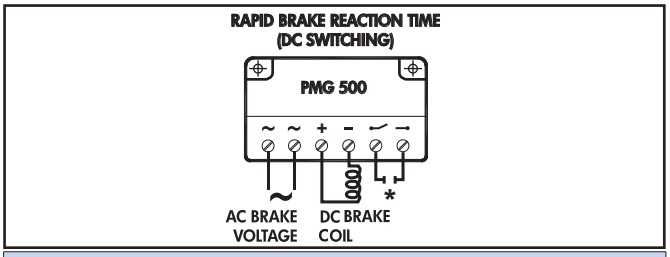

Terminals ~ & ~	-	Brake system connection to AC supply voltage
Terminals + & -	-	DC Voltage Connection to the brake coil
Terminals ⌐ & →	-	Installed Jumper for AC switching or Switch contact (as shown) for DC switching

*** The normally open contact/s (NO) is not supplied by NORD. It must close at the same time power is supplied to the brake. The contact must be capable of switching inductive loads and/or be rated IEC AC3.**

Power Source	Brake Release (start)	Brake engagement (stop)	Braking Method *	Rectifier
Motor Terminal Block	Standard	Very Fast (Reduced Power Holding)	40	GPE or PMG 500
Seperate Power Source	Standard	Very Fast (Reduced Power Holding)	55	GPU or PMG 500

*** Braking methods referenced in connection diagrams on pages 295 - 297.**

BRAKES

Send Quote Requests to info@automatedpt.com
Call +1(800)985-6929 To Order or Order Online At Nordgearmotors.com

Send Quote Requests to info@automatedpt.com Call +1(800)985-6929 To Order or Order Online At Nordgearmotors.com

Stopping Methods

DRIVESYSTEMS

Very Fast Stopping
(DC switching Via Reduced Power Holding & Integrated Voltage Sensing)

In reduced power holding, the rectifier initially supplies the rated DC voltage to the brake coil. When voltage is first applied, the rectifier operates as a full-wave rectifier (90% of the applied AC voltage), releasing the brake in the standard time. After the brake is released, the rectifier switches to half-wave mode (45% of the applied DC voltage), weakening the brake's magnetic field. The weaker field will allow the brake to stop more quickly when power is removed. In this method the brake coil is selected as if the brake system is powered by a full-wave rectifier. Therefore, the brake coil's DC-voltage rating should be 90% of the AC voltage applied to the rectifier.

These GPU rectifier s integrate DC-Switching, which is triggered by sensing the AC voltage supplied to the rectifier. When no voltage is present the GPU rectifier automatically opens the DC circuit. The GPU rectifier is primarily designed for use with a separate brake power source, such as inverter powered motors, soft-start motors, and two-speed motors.

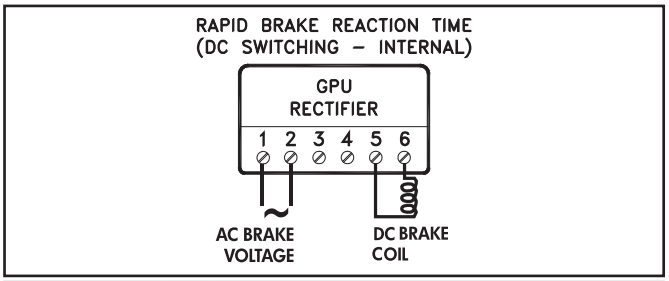

Terminals 1 & 2	-	Brake system connection to AC supply voltage
Terminals 3 & 4	-	No Jumper Connected
Terminals 5 & 6	-	DC Voltage Connection to the brake coil

Power Source	Brake Release (start)	Brake engagement (stop)	Braking Method *	Rectifier
Seperate Power Source	Standard	Very Fast (Reduced Power Holding)	55	GPU

*** Braking methods referenced in connection diagrams on pages 295 - 297.**

BRAKES

Send Quote Requests to info@automatedpt.com
Call +1(800)985-6929 To Order or Order Online At Nordgearmotors.com

Send Quote Requests to info@automatedpt.com Call +1(800)985-6929 To Order or Order Online At Nordgearmotors.com

Release Methods

Release Methods (Motor Starting)

NORD brake rectifiers can provide different types of release performance. The difference in performance is achieved by using a different rectifier and/or wiring the rectifier differently. The different methods include:

- Standard Brake Release (Constant Voltage)
- Fast Brake Release (Overexcitation)

Standard Brake Release (Constant Voltage)

For the standard brake release method the DC Brake coil is supplied by a constant rated DC voltage to magnetize the brake coil and release the brake. Typically the DC brake voltage is supplied via a brake rectifier. The brake rectifier converts AC supply voltage to DC output voltage to power the brake. NORD can supply rectifiers that are either full-wave or half-wave designs. The brake is released by supplying the rectifier with AC voltage which in turn supplies the brake coil with the needed DC voltage.

Example

Full-Wave

System voltage:	230 VAC
Brake coil:	205 VDC

Half-Wave

System voltage:	460 VDC
Brake coil:	205 VDC

Fast Brake Release (Overexcitation)

In overexcitation the rectifier initially over-voltages the brake coil. This overexcitation of the rectifier produces a magnetic field in the brake coil that is stronger than normal, releasing the brake much more quickly. The rectifier is then switched over to a lower holding voltage so as not to thermally overload the brake coil. In this method the brake coil is selected as if the brake system is powered by a half-wave rectifier. Therefore, the brake coil's DC-voltage rating should be 45% of the AC voltage applied to the rectifier. This type of brake control is also called "Voltage Forcing" and "Supercharging."

Example

System voltage:	230 VAC
Brake coil:	105 VDC
Initial brake release voltage:	205 VDC
Holding brake voltage:	105 VDC

Send Quote Requests to info@automatedpt.com
Call +1(800)985-6929 To Order or Order Online At Nordgearmotors.com

Full-Wave Rectifiers (GVE)

Full-Wave Rectifiers (GVE)

Our Full-Wave rectifiers' DC output voltage is 90% of the applied input AC voltage.

GVE Rectifier Dimensions

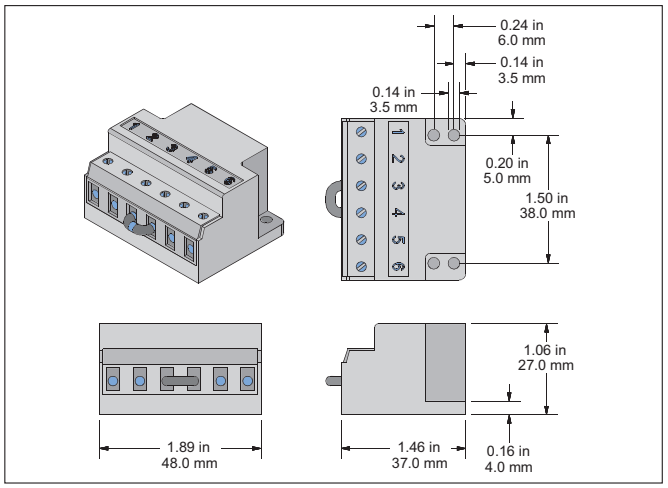

IMPORTANT NOTE

If the motor is connected to a frequency inverter, soft start, or is a two-speed motor, the AC power must be supplied to the brake rectifier seperately from the motor power.

Ratings & Part Numbers

Model Type	GVE20L	GVE20V
Part Number	19141000	19141030
Protection (electronics)	Coated	Encapsulated
Color	Black	
Input Voltage (V_{AC})	110-275 +/- 10% V_{AC}	
Output Voltage (V_{DC})	(V_{DC} =0.90 x V_{AC})	
Rated Current @ 40°C	1.5 A	
Rated Current @ 75°C	1.0 A	
Temperature Range	-20 °C to 75 °C	
DC-Switching via	External Contact or IR Relay	

Braking Method

Braking Method	Break Release (Start)	Brake Engage (Stop)	Power Source
10	Standard	Standard (AC-Switching)	Motor terminals
15	Standard	Fast (DC-switching)	Motor terminals
20	Standard	Standard (AC-Switching)	Separate power
25	Standard	Fast (DC-switching)	Separate power

Basic Connection (AC & DC Switching)

The GVE brake system can be connected for standard stopping (AC-Switching) or fast stopping (DC-Switching).

STANDARD STOPPING AC-SWITCHING

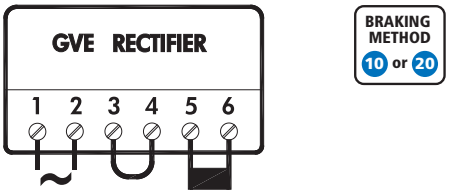

1 & 2	3 & 4	5 & 6
AC BRAKE VOLTAGE	JUMPER	DC BRAKE

FAST STOPPING DC-SWITCHING

1 & 2	3 & 4	5 & 6
AC BRAKE VOLTAGE	NORMALLY OPEN CONTACT	DC BRAKE

* The normally open contact/s (NO) is not supplied by NORD it must close at the same time power is supplied to the brake. The contact must be capable of switching inductive loads and/or be rated at IEC AC3.

BRAKES

Send Quote Requests to info@automatedpt.com
Call +1(800)985-6929 To Order or Order Online At Nordgearmotors.com

NORD DRIVESYSTEMS

Half-Wave Rectifiers (GHE)

Half-Wave Rectifiers (GHE)

Our Half-Wave rectifiers' DC output voltage is 45% of the applied input AC voltage.

GHE Rectifier Dimensions

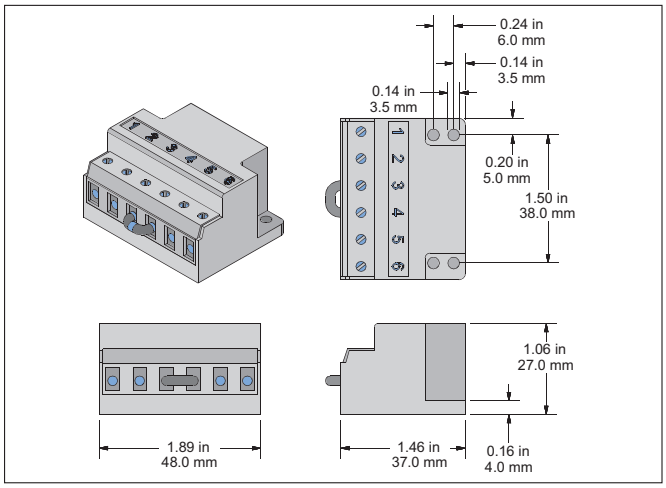

IMPORTANT NOTE

If the motor is connected to a frequency inverter, soft start, or is a two-speed motor, the AC power must be supplied to the brake rectifier seperately from the motor power.

Ratings & Part Numbers

Model Type	GHE40L	GHE40V
Part Number	19141010	19141040
Protection (electronics)	Coated	Encapsulated
Color	Yellow	
Input Voltage (V_{AC})	200-480V_{AC} +/- 10%	
Output Voltage (V_{DC})	(V_{DC}=0.45 x V_{AC})	
Rated Current @ 40°C	2.0A_{DC}	
Rated Current at 75°C	1.0A_{DC}	
Temperature Range	-20°C to 75°C	
DC-Switching via	External Contact	

Model Type	GHE50L	GHE50V
Part Number	19141020	19141050
Protection (electronics)	Coated	Encapsulated
Color	Grey	
Input Voltage (V_{AC})	200-480V_{AC} +/- 10%	
Output Voltage (V_{DC})	(V_{DC}=0.45 x V_{AC})	
Rated Current @ 40°C	2.0A_{DC}	
Rated Current @ 75°C	1.0A_{DC}	
Temperature Range	-20°C to 75°C	
DC-Switching via	External Contact or IR Relay	

Braking Method

Braking Method	Break Release (Start)	Brake Engage (Stop)	Power Source
10	Standard	Standard (AC-Switching)	Motor terminals
15	Standard	Fast (DC-switching)	Motor terminals
20	Standard	Standard (AC-Switching)	Separate power
25	Standard	Fast (DC-switching)	Separate power

Basic Connection (AC & DC Switching)

The GVE brake system can be connected for standard stopping (AC-Switching) or fast stopping (DC-Switching)

STANDARD STOPPING AC-SWITCHING

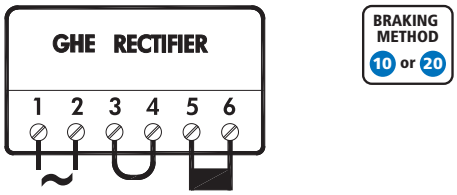

1 & 2	3 & 4	5 & 6
AC BRAKE VOLTAGE	JUMPER	DC BRAKE

FAST STOPPING DC-SWITCHING

1 & 2	3 & 4	5 & 6
AC BRAKE VOLTAGE	NORMALLY OPEN CONTACT	DC BRAKE

* The normally open contact/s (NO) is not supplied by NORD it must close at the same time power is supplied to the brake. The contact must be capable of switching inductive loads and/or be rated at IEC AC3.

BRAKES

Send Quote Requests to info@automatedpt.com
Call +1(800)985-6929 To Order or Order Online At Nordgearmotors.com

Dual-Wave Rectifiers (GUE)

NORD DRIVESYSTEMS

Dual-Wave Rectifiers (GUE)

The GUE rectifier is a "dual" rectifier that is either a full-wave or a half-wave rectifier depending on how it is connected. An advantage for using this rectifier is when using it together with a 205VDC brake coil, it is able to operate on either a 230 VAC or 460VAC power connection.

GUE Rectifier Dimensions

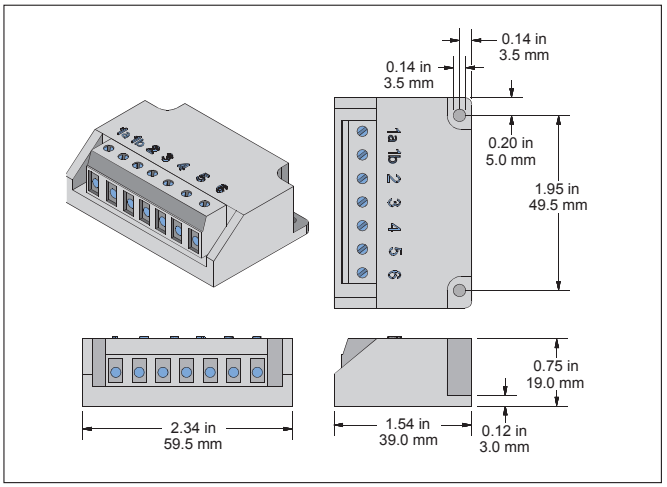

IMPORTANT NOTE

If the motor is connected to a frequency inverter, soft start, or is a two-speed motor, the AC power must be supplied to the brake rectifier seperately from the motor power.

Ratings & Part Numbers

Model Type	GUE40V	
Part Number	19140300	
Protection (electronics)	Coated	
Color	Black	
Input Voltage (V_{AC})	190-230 VAC +/- 10%	380460 VAC +/- 10%
Output Voltage (V_{DC})	(V_{DC} =0.90 x V_{AC}) As Full-Wave	(V_{DC} =0.45 x V_{AC}) As Half-Wave
Rated Current @ 40°C	0.7 A	
Rated Current @ 75°C	0.5 A	
Temperature Range	-20°C to 75°C	
DC-Switching via	External Contact or IR Relay	

Braking Method

Braking Method	Break Release (Start)	Brake Engage (Stop)	Power Source
10	Standard	Standard (AC-Switching)	Motor terminals
15	Standard	Fast (DC-switching)	Motor terminals
20	Standard	Standard (AC-Switching)	Separate power
25	Standard	Fast (DC-switching)	Separate power

Basic Connection (AC & DC Switching)

The GUE brake system can be connected for standard stopping (AC-Switching) or fast stopping (DC-Switching)

STANDARD STOPPING AC-SWITCHING

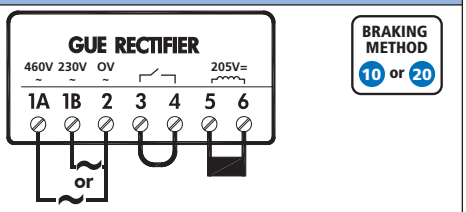

1B & 2	3 & 4	5 & 6
AC BRAKE VOLTAGE	JUMPER	DC BRAKE

FAST STOPPING DC-SWITCHING

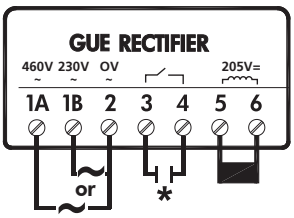

1 & 2	3 & 4	5 & 6
AC BRAKE VOLTAGE	NORMALLY OPEN CONTACT	DC BRAKE

* The normally open contact/s (NO) is not supplied by NORD it must close at the same time power is supplied to the brake. The contact must be capable of switching inductive loads and/or be rated at IEC AC3.

BRAKES

Send Quote Requests to info@automatedpt.com
Call +1(800)985-6929 To Order or Order Online At Nordgearmotors.com

NORD DRIVESYSTEMS

Push-Hybrid Rectifiers External DC Switching (GPE)

Push-Hybrid Rectifiers External DC Switching (GPE)

Like the standard NORD brake control rectifiers, NORD's fast acting brake control rectifiers convert AC voltage to DC voltage. The "Fast Acting Brake Rectifiers"are utilized to improve brake performance and are often recommended in order to provide shorter brake release times or to provide faster stopping times.

The fast acting rectifiers are a two-stage "push" design. When power is first applied these rectifiers operate like a full-wave rectifier and then after a relatively short period of time they act like a half-wave rectifier. The GPE type rectifiers start out in full-wave mode when power is first applied and then after approximately 250 ms they switch to half-wave mode.

GPE rectifiers were designed for external control of the brake's DC-switching. GPE rectifiers are primarily used in across-the-line applications where the brake power is supplied by the motor terminals, but they may also be used in situations where the brake power is supplied separately to the brake rectifier.

There are two ways to apply the fast acting rectifiers:

- The first method, known as "Overexcitation," provides fast brake release. The brake coil is selected like a half-wave system (45% of the AC supply voltage).
- The second method, known as "Reduced Power Holding," provides very fast brake stopping. The brake coil is selected like a full-wave system (90% of the AC supply voltage).

IMPORTANT NOTE

If the motor is connected to a frequency inverter, soft start, or a two-speed motor, then seperate AC power must be supplied to the brake rectifier.

GPE Rectifier Dimensions

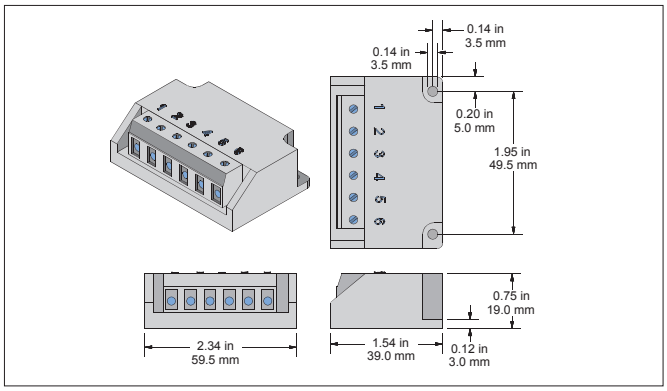

Ratings & Part Numbers

Model Type	GPE20L	GPE40L
Part Number	19140230	19140240
Protection (electronics)	Coated	Coated
Color	Black	
Input Voltage (V_{AC})	200V-275V	380V-480V
Output Voltage (V_{DC})	(V_{DC} =0.90 x V_{AC}) - As Initial State (V_{DC} =0.45 x V_{AC}) - As Steady State	
Rated Current @ 40°C	0.7 A	0.7A
Rated Current @ 75°C	0.5 A	0.5A
Temperature Range	-20°C to 75°C	
DC-Switching via	External Contact or IR Relay	

Braking Method

Braking Method	Break Release (Start)	Brake Engage (Stop)	Power Source
40	Standard	Very Fast (Reduced Power Holding)	Motor terminals
30	Fast (Overecitation)	Standard (AC Switching)	Motor terminals
35	Fast (Overecitation)	Fast (DC Switching)	Motor terminals

Basic Connection (AC & DC Switching)

The GPE brake system can be connected for standard stopping (AC-Switching), fast stopping (DC-Switching) and very fast stopping (Reduced power holding & DC-Switching). Fast brake release can also be achieved by selecting a different brake coil combination.

STANDARD STOPPING (AC-SWITCHING)

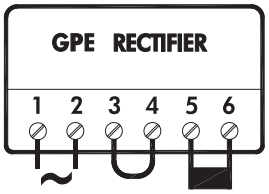

BRAKING METHOD 30

1 & 2	3 & 4	5 & 6
AC BRAKE VOLTAGE	JUMPER	DC BRAKE

FAST & VERY FAST STOPPING (DC-SWITCHING)

BRAKING METHOD 35 or 40

1 & 2	3 & 4	5 & 6
AC BRAKE VOLTAGE	NORMALLY OPEN CONTACT	DC BRAKE

* The normally open contact/s (NO) is not supplied by NORD it must close at the same time power is supplied to the brake. The contact must be capable of switching inductive loads and/or be rated at IEC AC3.

BRAKES

Send Quote Requests to info@automatedpt.com
Call +1(800)985-6929 To Order or Order Online At Nordgearmotors.com

Push-Hybrid Rectifiers External DC Switching (PMG)

NORD DRIVESYSTEMS

Push-Hybrid Rectifiers External DC Switching (PMG)

Like the standard NORD brake control rectifiers, NORD's fast acting brake control rectifiers convert AC voltage to DC voltage. The "Fast Acting Brake Rectifiers"are utilized to improve brake performance and are often recommended in order to provide shorter brake release times or to provide faster stopping times.

The fast acting rectifiers are a two-stage "push" design. When power is first applied these rectifiers operate like a full-wave rectifier and then after a relatively short period of time they act like a half-wave rectifier. The PMG type rectifiers start out in full-wave mode when power is first applied and then after approximately 250 ms they switch to half-wave mode.

PMG rectifiers were designed for external control of the brake's DC-switching. PMG rectifiers are primarily used in across-the-line applications where the brake power is supplied by the motor terminals, but they may also be used in situations where the brake power is supplied separately to the brake rectifier.

There are two ways to apply the fast acting rectifiers:

- The first method, known as "Overexcitation," provides fast brake release. The brake coil is selected like a half-wave system (45% of the AC supply voltage).
- The second method, known as "Reduced Power Holding," provides very fast brake stopping. The brake coil is selected like a full-wave system (90% of the AC supply voltage).

IMPORTANT NOTE

If the motor is connected to a frequency inverter, soft start, or a two-speed motor, then seperate AC power must be supplied to the brake rectifier.

PMG Rectifier Dimensions

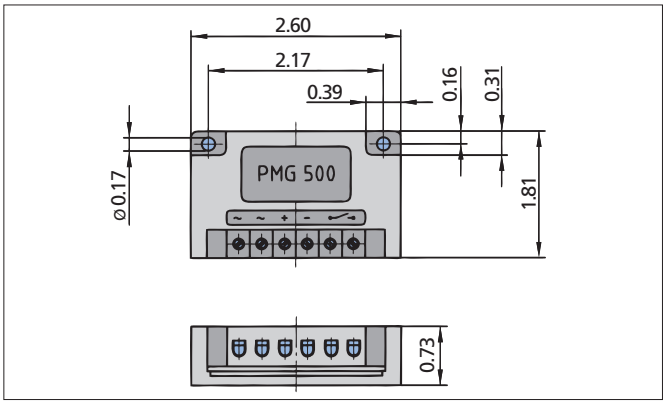

Ratings & Part Numbers

Model Type	PMG 500
Part Number	19140200
Protection (electronics)	Coated
Color	Black
Input Voltage (V_{AC})	200-500V_{AC} +/- 10%
Output Voltage (V_{DC})	(V_{DC}=0.90 x V_{AC}) - As Initial State (V_{DC}=0.45 x V_{AC}) - As Steady State
Rated Current @ 40°C	4.0 A
Rated Current @ 75°C	2.8 A
Temperature Range	-15°C to 80°C
DC-Switching via	External Contact

Braking Method

Braking Method	Break Release (Start)	Brake Engage (Stop)	Power Source
40	Standard	Very Fast (Reduced Power Holding)	Motor terminals
30	Fast (Overecitation)	Standard (AC Switching)	Motor terminals
35	Fast (Overecitation)	Fast (DC Switching)	Motor terminals
55	Standard	Very Fast (Reduced Power Holding)	Seperate power
45	Fast (Overecitation)	Standard (AC Switching)	Seperate power
50	Fast (Overecitation)	Fast (DC Switching)	Seperate power

Basic Connection (AC & DC Switching)

The PMG brake system can be connected for standard stopping (AC-Switching), fast stopping (DC-Switching) and very fast stopping (Reduced power holding & DC-Switching). Fast brake release can also be achieved by selecting a different brake coil combination.

STANDARD STOPPING (AC-SWITCHING)

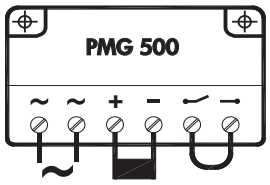

BRAKING METHOD 30 or 45

~ & ~	+ & -	⊸ & ⊸
AC BRAKE VOLTAGE	DC BRAKE	JUMPER

FAST & VERY FAST STOPPING (DC-SWITCHING)

BRAKING METHOD 35 or 40 50 or 55

~ & ~	+ & -	⊸ & ⊸
AC BRAKE VOLTAGE	DC BRAKE	NORMALLY OPEN CONTACT

* The normally open contact/s (NO) is not supplied by NORD it must close at the same time power is supplied to the brake. The contact must be capable of switching inductive loads and/or be rated at IEC AC3.

BRAKES

Send Quote Requests to info@automatedpt.com
Call +1(800)985-6929 To Order or Order Online At Nordgearmotors.com

NORD DRIVESYSTEMS

Push-Hybrid Rectifiers Integrated DC Switching (GPU)

Push-Hybrid Rectifiers Integrated DC Switching (GPU)

Like the standard NORD brake control rectifiers, NORD's fast acting brake control rectifiers convert AC voltage to DC voltage. The "Fast Acting Brake Rectifiers"are utilized to improve brake performance and are often recommended in order to provide shorter brake release times or to provide faster stopping times.

The fast acting rectifiers are a two-stage "push" design. When power is first applied these rectifiers operate like a full-wave rectifier and then after a relatively short period of time they act like a half-wave rectifier. The GPU rectifiers start out in full-wave mode when power is first applied and then after approximately 250 ms they switch to half-wave mode.

GPU rectifiers were designed for integrated control of the brake's DC-switching and voltage sensing. GPU rectifiers are primarily used in applications where there is a frequency inverter, soft-start, or two-speed motor. Seperate AC power must be supplied to the brake rectifier.

There are two ways to apply the fast acting rectifiers:

- The first method, known as "Overexcitation," provides fast brake release. The brake coil is selected like a half-wave system (45% of the AC supply voltage).
- The second method, known as "Reduced Power Holding," provides very fast brake stopping. The brake coil is selected like a full-wave system (90% of the AC supply voltage).

IMPORTANT NOTE

The GPU rectifier may also be utilized for across-the-line applications; however it must always be powered separate from the motor and have its own pair of contactors or starters. It is unadvisable to use the motor terminal block to supply the GPU rectifier's AC power due to the motor's slow energy dissipation when switched off.

IMPORTANT NOTE

If the motor is connected to a frequency inverter, soft start, or a two-speed motor, then seperate AC power must be supplied to the brake rectifier.

Braking Method

Braking Method	Break Release (Start)	Brake Engage (Stop)	Power Source
55	Standard	Very Fast (Reduced Power Holding)	Seperate power
45	Fast (Overecitation)	Standard (AC Switching)	Seperate power
50	Fast (Overecitation)	Fast (DC Switching)	Seperate power

GPU Rectifier Dimensions

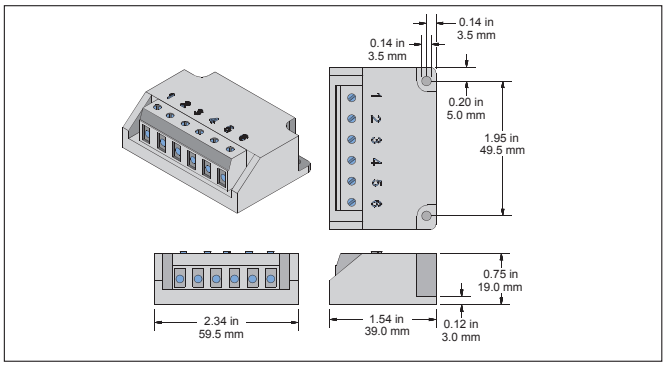

Ratings & Part Numbers

Model Type	GPU20L	GPU40L
Part Number	19140090	19140170
Protection (electronics)	Coated	Coated
Color	Black	
Input Voltage (V_{AC})	200V-275V	380V-480V
Output Voltage (V_{DC})	(V_{DC}=0.90 x V_{AC}) - Initial State (V_{DC}=0.45 x V_{AC}) - Steady State	
Rated Current @ 40°C	0.7A	0.7A
Rated Current @ 75°C	0.5A	0.5A
Temperature Range	-20°C to 75°C	
DC-Switching via	Internal Activation	

Basic Connection (AC & DC Switching)

The GPU brake system can be connected for standard stopping (AC-Switching), fast stopping (DC-Switching) and very fast stopping (Reduced power holding & DC-Switching). Fast brake release can also be achieved by selecting a different brake coil combination.

STANDARD STOPPING AC-SWITCHING

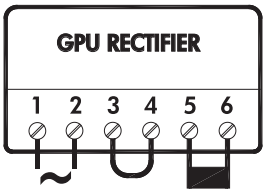

BRAKING METHOD 45

1 & 2	3 & 4	5 & 6
AC BRAKE VOLTAGE	JUMPER	DC BRAKE

FAST & VERY FAST STOPPING DC-SWITCHING

BRAKING METHOD 50 or 55

1 & 2	3 & 4	5 & 6
AC BRAKE VOLTAGE	-	DC BRAKE

BRAKES

Send Quote Requests to info@automatedpt.com
Call +1(800)985-6929 To Order or Order Online At Nordgearmotors.com

Send Quote Requests to info@automatedpt.com Call +1(800)985-6929 To Order or Order Online At Nordgearmotors.com

Standard Components

NORD DRIVESYSTEMS

Standard Brake Components

Brake Rectifier Compatability

Supply Voltage (VAC)	Coil Voltage (VDC)	Braking Method	Rectifier Type	Rectifier P/N	BRE 5	BRE 10	BRE 20	BRE 40	BRE 60
332	180	30	GPE40	19140240	X	X	X	X	
	180	30	PMG500	19140200					X
	180	35	GPE40	19140240	X	X	X	X	
	180	35	PMG500	19140200					X
	180	45	GPU40	19140170	X	X	X	X	
	180	50	GPU40	19140170	X	X	X	X	
400 (380-415)	180	10	GHE40	19141010	X	X	X	X	X
	180	15	GHE40	19141010	X	X	X	X	X
	180	20	GHE40	19141010	X	X	X	X	X
	180	25	GHE40	19141010	X	X	X	X	X
	180	30	GPE40	19140240	X	X	X	X	X
	180	30	PMG500	19140200					
	180	35	GPE40	19140240	X	X	X	X	X
	180	35	PMG500	19140200					
	180	45	GPU40	19140170	X	X	X	X	X
	180	45	PMG500	19140200					
	180	50	GPU40	19140170	X	X	X	X	X
	180	50	PMG500	19140200					
460 (440-480)	205	10	GHE40	19141010	X	X	X	X	X
	205	15	GHE40	19141010	X	X	X	X	X
	205	20	GHE40	19141010	X	X	X	X	X
	205	20	GUE40V	19140300	X	X	X	X	X
	205	25	GHE40	19141010	X	X	X	X	X
	205	25	GUE40V	19140300	X	X	X	X	X
	205	30	GPE40	19140240	X	X	X	X	X
	205	30	PMG500	19140200					
	205	35	GPE40	19140240	X	X	X	X	X
	205	35	PMG500	19140200					
	205	45	GPU40	19140170	X	X	X	X	X
	205	45	PMG500	19140200					
	205	50	GPU40	19140170	X	X	X	X	X
	205	50	PMG500	19140200					
575 (550-600)	250	10	GHE50	19141020	X	X	X	X	X
	250	15	GHE50	19141020	X	X	X	X	X
	250	20	GHE50	19141020	X	X	X	X	X
	250	25	GHE50	19141020	X	X	X	X	X

BRAKES

Send Quote Requests to info@automatedpt.com
Call +1(800)985-6929 To Order or Order Online At Nordgearmotors.com

Send Quote Requests to info@automatedpt.com Call +1(800)985-6929 To Order or Order Online At Nordgearmotors.com

Brake Performance Data

Brake Size		BRE5	BRE10	BRE20	BRE40	BRE60
Brake torque $_{-max}$	[lb-ft]	3.7	7.4	15	30	44
	[lb-in]	44	89	177	354	531
	[Nm]	5	10	20	40	60
Power coil P	[W]	22	28	39	42	50
Nominal air gap	[in]	0.008	0.008	0.008	0.012	0.012
	[mm]	0.2	0.2	0.2	0.3	0.3
Maximum air gap (re-adjust) a	[in]	0.024	0.013	n/a *	0.035	0.039
	[mm]	0.6	0.8	n/a *	0.9	1.0
Max brake pad wear - must be replaced	[in]	0.118	0.118	0.039	0.118	0.138
	[mm]	3	3	1	3	3.5
Minimum brake pad thickness	[in]	0.177	0.217	0.295	0.374	0.453
	[mm]	4.5	5.5	7.5	9.5	11.5
Max work per cycle W	[Jx10^3]	3	6	12	25	35
Work until re-adjust W	[Jx10^7]	5	12	20	35	60
Heat load per cycle	[J/s]	80	100	130	160	200
Release time (start) t	[ms]	35	45	70	80	120
Release time (start) t	[ms]	15	15	28	28	75
Setting time (stop) t	[ms]	70	95	140	175	210
Setting time (stop) t	[ms]	30	45	30	75	90
Setting time (stop) t	[ms]	5	6	11	12	12
IR relay delay (stop) t	[ms]	18	18	18	18	18
Current – 250VDC coil	[A]	0.09	0.11	0.16	0.18	0.19
Current – 225VDC coil	[A]	0.09	0.13	0.18	0.20	0.22
Current – 205VDC coil	[A]	0.11	0.13	0.22	0.24	0.28
Current – 180VDC coil	[A]	0.12	0.16	0.21	0.25	0.30
Current – 105VDC coil	[A]	0.21	0.32	0.36	0.46	0.60
Current – 24VDC coil	[A]	0.92	1.17	1.63	1.75	2.08

Send Quote Requests to info@automatedpt.com
Call +1(800)985-6929 To Order or Order Online At Nordgearmotors.com

Brake Calculations

NORD DRIVESYSTEMS

Brake Size Calculation

Torque and inertias below are based on the motor speed. Load side torques must always be divided by the gear reduction ratio. Inertias must be divided by the *square* of the gear ratio. You must also consider any external reduction ratio outside the gearbox.

Selection for holding loads (static)

$$T_{req} = T_{stat} = T_{load} \times K$$

Selection for stopping loads (static + dynamic)

$$\sum J = J_{motor} + \frac{J_{load}}{i^2}$$

Typically other inertias, like the gearbox, can be ignored.

$$T_{dyn} = \frac{\sum J \times n}{25.7 \times t}$$

$$T_{req} = (T_{dyn} \pm T_{load}) \times K$$

For driving loads use: $-T_{load}$
For overhauling loads use: $+T_{load}$

Brake Work Verification

$$W = \frac{\sum J \times n^2}{5880} \times \frac{T_B}{T_B \pm T_{load}} \Rightarrow W \leq W_{max}$$

For driving loads use: $+T_{load}$
For overhauling loads use: $-T_{load}$

The permissible values for W_{max} (Friction work) depend on the stopping frequency. See diagram at right.

In applications where the brake is operated frequently, two brake work values should be evaluated to ensure adequate brake life: the braking work compared to the braking frequency and the maximum work limit for a single operation, such as an E-stop. Reviewing these two values will help determine the optimal solution and ensure long brake life.

Abbreviation Key

c/h	=	Number of brakes per hour
J [lb-ft²]	=	Inertia
J_{motor} [lb-ft²]	=	Motor inertia
i	=	System reduction ratio
K	=	Safety factors. Based on application and according to industry rules and practices Hoisting >2 Hoisting with people >2..3 Travel drives 0.5 to 1.5
T_B [lb-in]	=	Brake torque
T_{dyn} [lb-in]	=	Dynamic torque
T_{req} [lb-in]	=	Required brake torque
T_{load} [lb-in]	=	Load torque
T_{stat} [lb-in]	=	Static torque
n [rpm]	=	Motor speed
t_r [sec]	=	Stopping time
W [J]	=	Brake work
W_{max} [J]	=	Maximum brake work for one brake operations

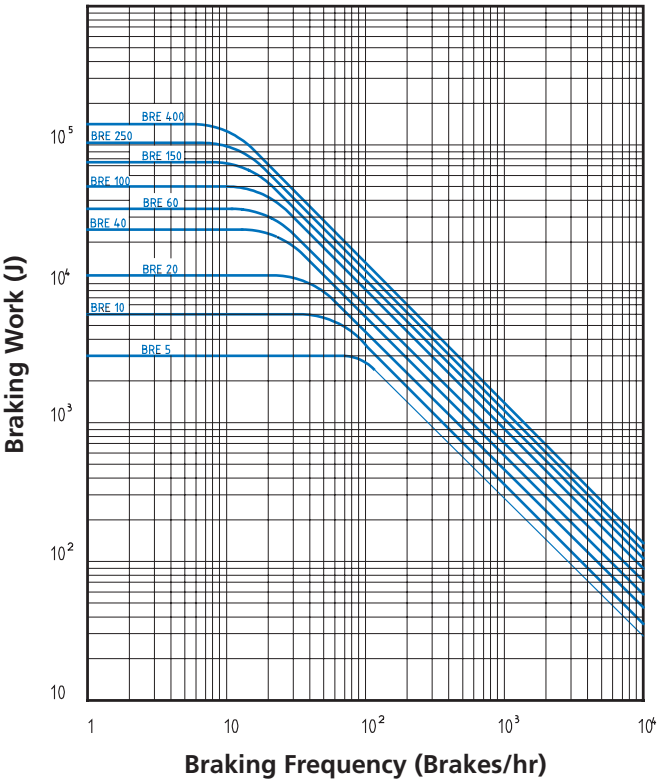

BRAKES

Send Quote Requests to info@automatedpt.com
Call +1(800)985-6929 To Order or Order Online At Nordgearmotors.com

NORD DRIVESYSTEMS

Connections
GHE & GVE Rectifiers

GHE & GVE Connection Diagrams

BR101A — POWERED FROM MOTOR TERMINAL BLOCK — STANDARD RELEASE — NORMAL STOPPING (AC-SWITCHING) — 10

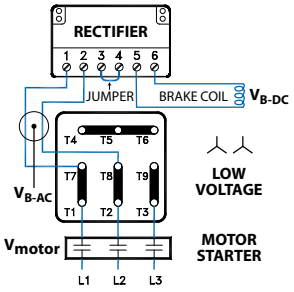

MOTOR	RECTIFIER	V_{motor}	V_{B-AC}	V_{B-DC}
208-230YY/460Y	GVE20	208 VAC	230 VAC	205 VDC
230YY/460Y	GVE20	230 VAC	230 VAC	205 VDC
230YY/460Y	GHE40	230 VAC	230 VAC	105 VDC

BR101B — POWERED FROM MOTOR TERMINAL BLOCK — STANDARD RELEASE — NORMAL STOPPING (AC-SWITCHING) — 10

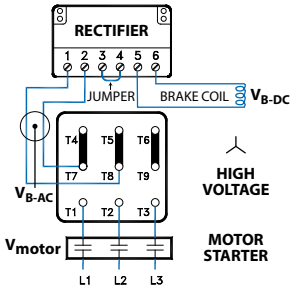

MOTOR	RECTIFIER	V_{motor}	V_{B-AC}	V_{B-DC}
230YY/460Y	GVE20	460 VAC	230 VAC	205 VDC

GP101C — POWERED FROM MOTOR TERMINAL BLOCK — STANDARD RELEASE — NORMAL STOPPING (AC-SWITCHING) — 10

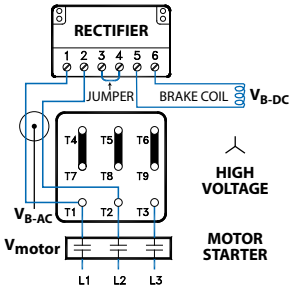

MOTOR	RECTIFIER	V_{motor}	V_{B-AC}	V_{B-DC}
230YY/460Y	GHE40	460 VAC	460 VAC	205 VDC

BR601A — POWERED FROM MOTOR TERMINAL BLOCK — STANDARD RELEASE — NORMAL STOPPING (AC-SWITCHING) — 10

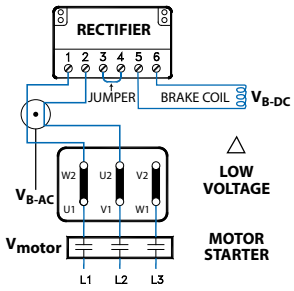

MOTOR	RECTIFIER	V_{motor}	V_{B-AC}	V_{B-DC}
208Δ/360Y	GVE20	208 VAC	208 VAC	180 VDC
230Δ/400Y	GVE20	230 VAC	230 VAC	205 VDC
400Δ/690Y	GHE40	400 VAC	400 VAC	180 VDC
460Δ/Y	GHE40	460 VAC	460 VAC	205 VDC

BR601B — POWERED FROM MOTOR TERMINAL BLOCK — STANDARD RELEASE — NORMAL STOPPING (AC-SWITCHING) — 10

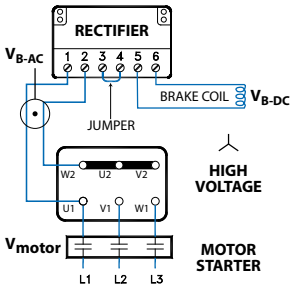

MOTOR	RECTIFIER	V_{motor}	V_{B-AC}	V_{B-DC}
230Δ/400Y	GVE20	400 VAC	230 VAC	205 VDC

BR601C — POWERED FROM MOTOR TERMINAL BLOCK — STANDARD RELEASE — NORMAL STOPPING (AC-SWITCHING) — 10

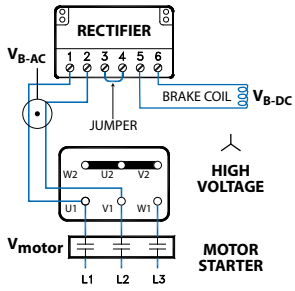

MOTOR	RECTIFIER	V_{motor}	V_{B-AC}	V_{B-DC}
332Δ/575Y	GHE50	575 VAC	575 VAC	250 VDC

BR603A — POWERED FROM MOTOR TERMINAL BLOCK — STANDARD RELEASE — FAST STOPPING (DC-SWITCHING) — 15

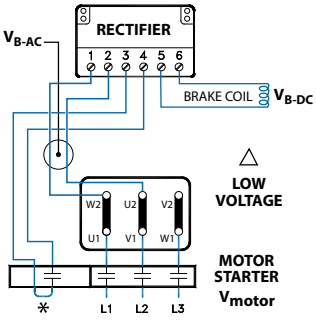

MOTOR	RECTIFIER	V_{motor}	V_{B-AC}	V_{B-DC}
208Δ/360Y	GVE20	208 VAC	208 VAC	180 VDC
230Δ/400Y	GVE20	230 VAC	230 VAC	205 VDC
400Δ/690Y	GHE40	400 VAC	400 VAC	180 VDC
460Δ/Y	GHE40	460 VAC	460 VAC	205 VDC

BR603B — POWERED FROM MOTOR TERMINAL BLOCK — STANDARD RELEASE — FAST STOPPING (DC-SWITCHING) — 15

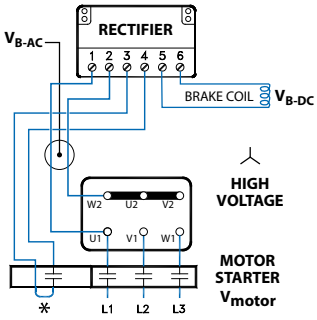

MOTOR	RECTIFIER	V_{motor}	V_{B-AC}	V_{B-DC}
230Δ/400Y	GVE20	400 VAC	230 VAC	205 VDC

BR603C — POWERED FROM MOTOR TERMINAL BLOCK — STANDARD RELEASE — FAST STOPPING (DC-SWITCHING) — 15

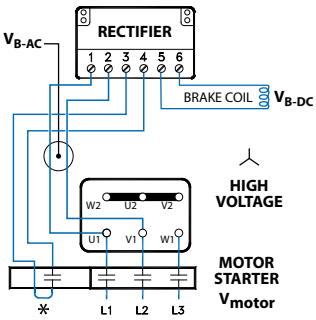

MOTOR	RECTIFIER	V_{motor}	V_{B-AC}	V_{B-DC}
332Δ/575Y	GHE50	575 VAC	575 VAC	250 VDC

BR103A — POWERED FROM MOTOR TERMINAL BLOCK — STANDARD RELEASE — FAST STOPPING (DC-SWITCHING) — 15

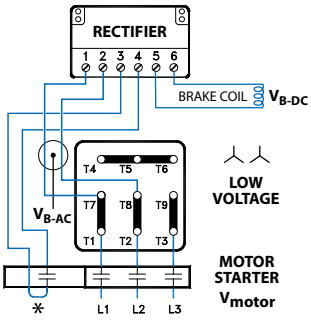

MOTOR	RECTIFIER	V_{motor}	V_{B-AC}	V_{B-DC}
208-230YY/460Y	GVE20	208 VAC	230 VAC	205 VDC
230YY/460Y	GVE20	230 VAC	230 VAC	205 VDC
230YY/460Y	GHE40	230 VAC	230 VAC	105 VDC

BR103B — POWERED FROM MOTOR TERMINAL BLOCK — STANDARD RELEASE — FAST STOPPING (DC-SWITCHING) — 15

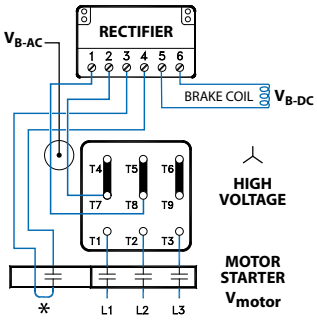

MOTOR	RECTIFIER	V_{motor}	V_{B-AC}	V_{B-DC}
230YY/460Y	GVE20	460 VAC	230 VAC	205 VDC

BR103C — POWERED FROM MOTOR TERMINAL BLOCK — STANDARD RELEASE — FAST STOPPING (DC-SWITCHING) — 15

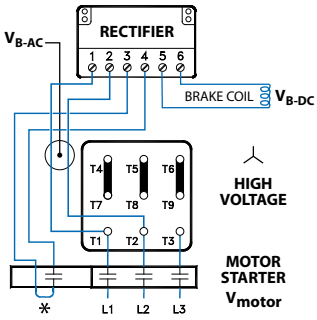

MOTOR	RECTIFIER	V_{motor}	V_{B-AC}	V_{B-DC}
230YY/460Y	GHE40	460 VAC	460 VAC	205 VDC

✱ The normally open contact/s (NO) is not supplied by NORD. It must close at the same time power is supplied to the brake. The contact must be capable of switching inductive loads and/or be rated IEC AC3.

= Braking Method

BRAKES

Send Quote Requests to info@automatedpt.com
Call +1(800)985-6929 To Order or Order Online At Nordgearmotors.com

Connections
GHE & GVE Rectifiers

NORD DRIVESYSTEMS

GHE & GVE Connection Diagrams

BR102A — 20

SEPERATE POWER SOURCE
STANDARD RELEASE
NORMAL STOPPING (AC-SWITCHING)

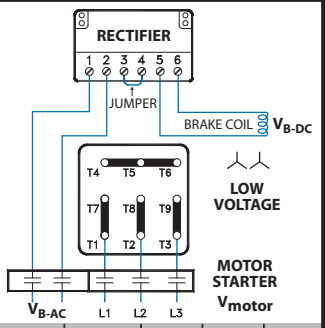

MOTOR	RECTIFIER	V_{motor}	V_{B-AC}	V_{B-DC}
208-230YY/460Y	GVE20	208 VAC	230 VAC	205 VDC
230YY/460Y	GVE20	230 VAC	115 VAC	105 VDC
230YY/460Y	GVE20	230 VAC	230 VAC	205 VDC
230YY/460Y	GHE40	230 VAC	230 VAC	105 VDC

BR102B — 20

SEPERATE POWER SOURCE
STANDARD RELEASE
NORMAL STOPPING (AC-SWITCHING)

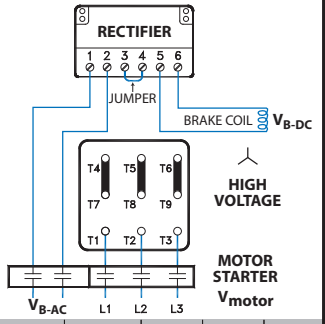

MOTOR	RECTIFIER	V_{motor}	V_{B-AC}	V_{B-DC}
230YY/460Y	GVE20	460 VAC	115 VAC	105 VDC
230YY/460Y	GHE40	460 VAC	460 VAC	205 VDC

BR602A — 20

SEPERATE POWER SOURCE
STANDARD RELEASE
NORMAL STOPPING (AC-SWITCHING)

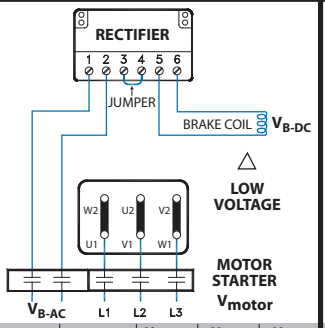

MOTOR	RECTIFIER	V_{motor}	V_{B-AC}	V_{B-DC}
208Δ/360Y	GVE20	208 VAC	208 VAC	180 VDC
230Δ/400Y	GVE20	230 VAC	230 VAC	205 VDC
400Δ/690Y	GHE40	400 VAC	400 VAC	180 VDC
460Δ/Y	GHE40	460 VAC	460 VAC	205 VDC

BR602B — 20

SEPERATE POWER SOURCE
STANDARD RELEASE
NORMAL STOPPING (AC-SWITCHING)

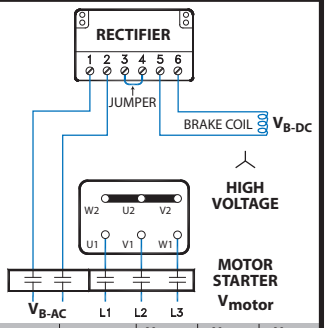

MOTOR	RECTIFIER	V_{motor}	V_{B-AC}	V_{B-DC}
230Δ/400Y	GHE40	400 VAC	400 VAC	180 VDC
332Δ/575Y	GHE50	575 VAC	575 VAC	250 VDC

BR104A — 25

SEPERATE POWER SOURCE
STANDARD RELEASE
FAST STOPPING (DC-SWITCHING)

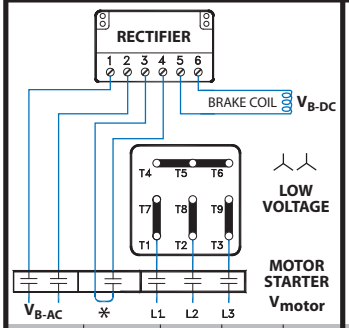

MOTOR	RECTIFIER	V_{motor}	V_{B-AC}	V_{B-DC}
208-230YY/460Y	GVE20	208 VAC	230 VAC	205 VDC
230YY/460Y	GVE20	230 VAC	115 VAC	105 VDC
230YY/460Y	GVE20	230 VAC	230 VAC	205 VDC
230YY/460Y	GHE40	230 VAC	230 VAC	105 VDC

BR104B — 25

SEPERATE POWER SOURCE
STANDARD RELEASE
FAST STOPPING (DC-SWITCHING)

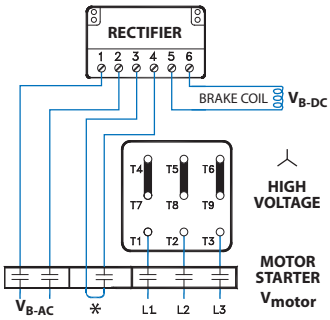

MOTOR	RECTIFIER	V_{motor}	V_{B-AC}	V_{B-DC}
230YY/460Y	GVE20	460 VAC	115 VAC	105 VDC
230YY/460Y	GHE40	460 VAC	460 VAC	205 VDC

BR604A — 25

SEPERATE POWER SOURCE
STANDARD RELEASE
FAST STOPPING (DC-SWITCHING)

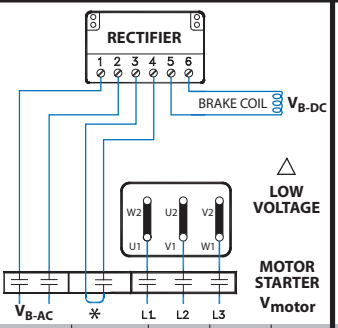

MOTOR	RECTIFIER	V_{motor}	V_{B-AC}	V_{B-DC}
208Δ/360Y	GHE20	208 VAC	208 VAC	105 VDC
230Δ/400Y	GHE20	230 VAC	230 VAC	105 VDC
400Δ/690Y	GHE40	400 VAC	400 VAC	180 VDC
460Δ/Y	GHE40	460 VAC	460 VAC	205 VDC

BR604B — 25

SEPERATE POWER SOURCE
STANDARD RELEASE
FAST STOPPING (DC-SWITCHING)

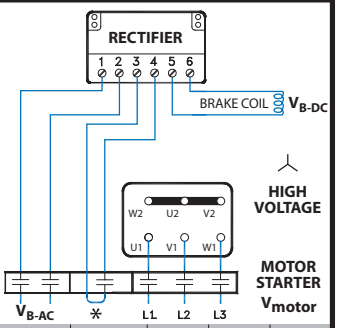

MOTOR	RECTIFIER	V_{motor}	V_{B-AC}	V_{B-DC}
230Δ/400Y	GHE20	400 VAC	230 VAC	105 VDC
332Δ/575Y	GHE40	575 VAC	332 VAC	180 VDC

✱ The normally open contact/s (NO) is not supplied by NORD. It must close at the same time power is supplied to the brake. The contact must be capable of switching inductive loads and/or be rated IEC AC3.

● = Braking Method

BRAKES

Send Quote Requests to info@automatedpt.com
Call +1(800)985-6929 To Order or Order Online At Nordgearmotors.com

NORD DRIVESYSTEMS

Connections GUE Rectifiers

GUE Dual Rectifier - Connection Diagrams

GU101A — 10

POWERED FROM MOTOR TERMINAL BLOCK
STANDARD RELEASE
STANDARD STOPPING (AC-SWITCHING)

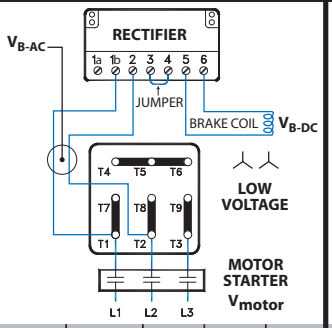

MOTOR	RECTIFIER	V_{motor}	V_{B-AC}	V_{B-DC}
208-230YY/460Y	GUE40V	208 VAC	230 VAC	205 VDC
230YY/460Y	GUE40V	230 VAC	230 VAC	205 VDC

GU101B — 10

POWERED FROM MOTOR TERMINAL BLOCK
STANDARD RELEASE
STANDARD STOPPING (AC-SWITCHING)

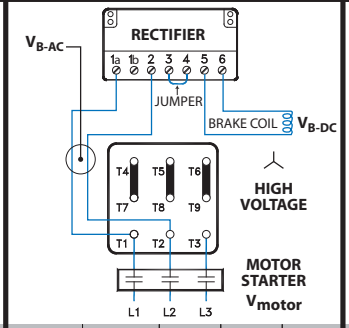

MOTOR	RECTIFIER	V_{motor}	V_{B-AC}	V_{B-DC}
208-230YY/460Y	GUE40V	460 VAC	460 VAC	205 VDC
230YY/460Y	GUE40V	460 VAC	460 VAC	205 VDC

GU103A — 15

POWERED FROM MOTOR TERMINAL BLOCK
STANDARD RELEASE
FAST STOPPING (DC-SWITCHING)

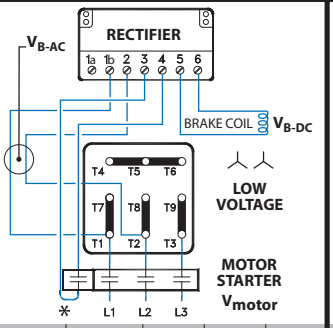

MOTOR	RECTIFIER	V_{motor}	V_{B-AC}	V_{B-DC}
208-230YY/460Y	GUE40V	208 VAC	230 VAC	205 VDC
230YY/460Y	GUE40V	230 VAC	230 VAC	205 VDC

GU103B — 15

POWERED FROM MOTOR TERMINAL BLOCK
STANDARD RELEASE
FAST STOPPING (DC-SWITCHING)

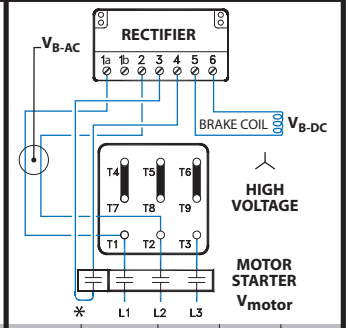

MOTOR	RECTIFIER	V_{motor}	V_{B-AC}	V_{B-DC}
208-230YY/460Y	GUE40V	460 VAC	460 VAC	205 VDC
230YY/460Y	GUE40V	460 VAC	460 VAC	205 VDC

GU102A — 20

SEPERATE POWER SOURCE
STANDARD RELEASE
STANDARD STOPPING (AC-SWITCHING)

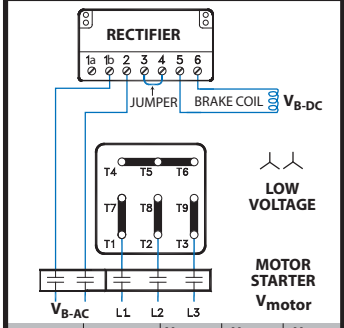

MOTOR	RECTIFIER	V_{motor}	V_{B-AC}	V_{B-DC}
208-230YY/460Y	GUE40V	208 VAC	230 VAC	205 VDC
230YY/460Y	GUE40V	230 VAC	230 VAC	205 VDC

GU102B — 20

SEPERATE POWER SOURCE
STANDARD RELEASE
STANDARD STOPPING (AC-SWITCHING)

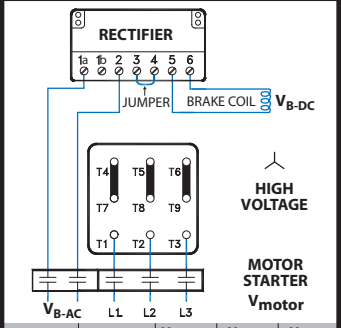

MOTOR	RECTIFIER	V_{motor}	V_{B-AC}	V_{B-DC}
208-230YY/460Y	GUE40V	460 VAC	460 VAC	205 VDC
230YY/460Y	GUE40V	460 VAC	460 VAC	205 VDC

GU104A — 25

SEPERATE POWER SOURCE
STANDARD RELEASE
FAST STOPPING (DC-SWITCHING)

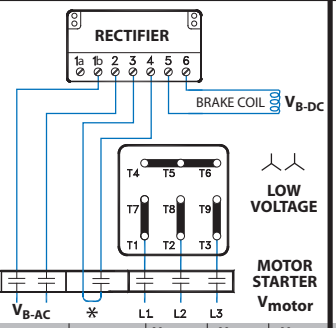

MOTOR	RECTIFIER	V_{motor}	V_{B-AC}	V_{B-DC}
208-230YY/460Y	GUE40V	208 VAC	230 VAC	205 VDC
230YY/460Y	GUE40V	230 VAC	230 VAC	205 VDC

GU104B — 25

SEPERATE POWER SOURCE
STANDARD RELEASE
FAST STOPPING (DC-SWITCHING)

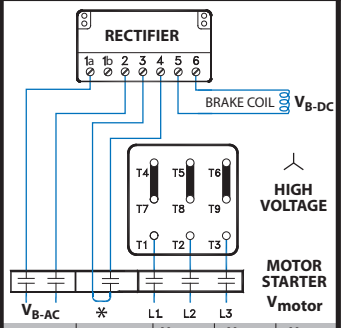

MOTOR	RECTIFIER	V_{motor}	V_{B-AC}	V_{B-DC}
208-230YY/460Y	GUE40V	460 VAC	460 VAC	205 VDC
230YY/460Y	GUE40V	460 VAC	460 VAC	205 VDC

BRAKES

✱ The normally open contact/s (NO) is not supplied by NORD. It must close at the same time power is supplied to the brake. The contact must be capable of switching inductive loads and/or be rated IEC AC3.

= Braking Method

Send Quote Requests to info@automatedpt.com
Call +1(800)985-6929 To Order or Order Online At Nordgearmotors.com

Connections
GPE Rectifiers

NORD DRIVESYSTEMS

GPE Rectifier - Connection Diagrams

GP101A — 30

POWERED FROM MOTOR TERMINAL BLOCK
FAST-RELEASE (OVER EXCITATION)
NORMAL STOPPING (AC-SWITCHING)

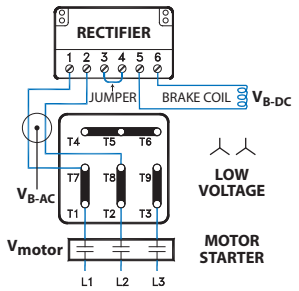

MOTOR	RECTIFIER	Vmotor	VB-AC	VB-DC
230YY/460Y	GPE20L	230 VAC	230 VAC	105 VDC

GP101B — 30

POWERED FROM MOTOR TERMINAL BLOCK
FAST-RELEASE (OVER EXCITATION)
NORMAL STOPPING (AC-SWITCHING)

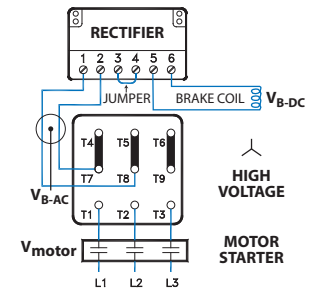

MOTOR	RECTIFIER	Vmotor	VB-AC	VB-DC
230YY/460Y	GPE20L	460 VAC	230 VAC	105 VDC

GP101C — 30

POWERED FROM MOTOR TERMINAL BLOCK
FAST-RELEASE (OVER EXCITATION)
NORMAL STOPPING (AC-SWITCHING)

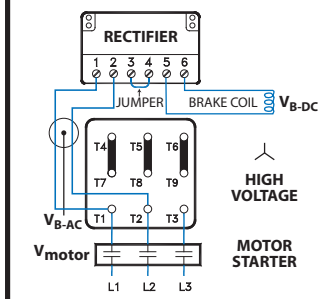

MOTOR	RECTIFIER	Vmotor	VB-AC	VB-DC
230YY/460Y	GPE40L	460 VAC	460 VAC	205 VDC

GP101D — 30

POWERED FROM MOTOR TERMINAL BLOCK
FAST-RELEASE (OVER EXCITATION)
NORMAL STOPPING (AC-SWITCHING)

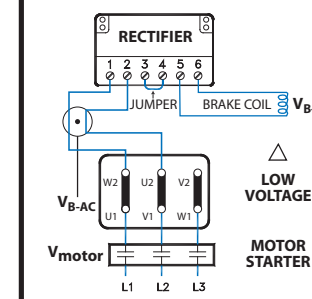

MOTOR	RECTIFIER	Vmotor	VB-AC	VB-DC
208Δ/360Y	GPE20L	208 VAC	208 VAC	105 VDC
230Δ/400Y	GPE20L	230 VAC	230 VAC	105 VDC
400Δ/690Y	GPE40L	400 VAC	400 VAC	180 VDC
460Δ/Y	GPE40L	460 VAC	460 VAC	205 VDC

GP101E — 30

POWERED FROM MOTOR TERMINAL BLOCK
FAST-RELEASE (OVER EXCITATION)
NORMAL STOPPING (AC-SWITCHING)

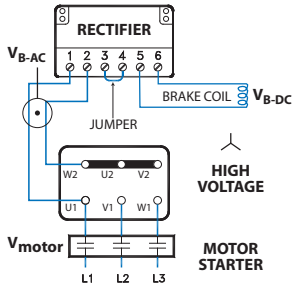

MOTOR	RECTIFIER	Vmotor	VB-AC	VB-DC
230Δ/400Y	GPE20L	400 VAC	230 VAC	105 VDC
332Δ/575Y	GPE40L	575 VAC	332 VAC	180 VDC

GP102A — 35

POWERED FROM MOTOR TERMINAL BLOCK
FAST-RELEASE (OVER EXCITATION)
FAST STOPPING (DC-SWITCHING)

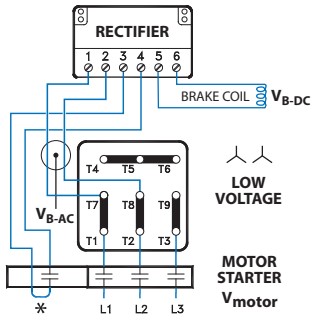

MOTOR	RECTIFIER	Vmotor	VB-AC	VB-DC
230YY/460Y	GPE20L	230 VAC	230 VAC	105 VDC

GP102B — 35

POWERED FROM MOTOR TERMINAL BLOCK
FAST-RELEASE (OVER EXCITATION)
FAST STOPPING (DC-SWITCHING)

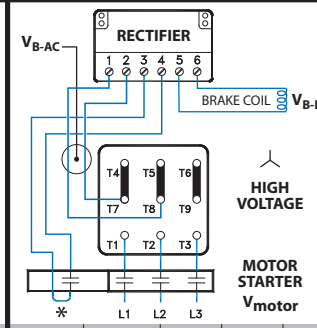

MOTOR	RECTIFIER	Vmotor	VB-AC	VB-DC
230YY/460Y	GPE20L	460 VAC	230 VAC	105 VDC

GP102C — 35

POWERED FROM MOTOR TERMINAL BLOCK
FAST-RELEASE (OVER EXCITATION)
FAST STOPPING (DC-SWITCHING)

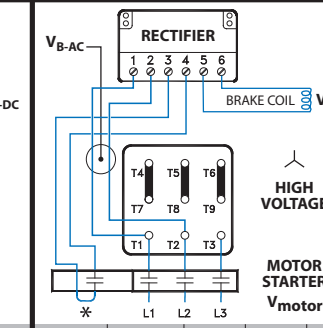

MOTOR	RECTIFIER	Vmotor	VB-AC	VB-DC
230YY/460Y	GPE40L	460 VAC	460 VAC	205 VDC

GP102D — 35

POWERED FROM MOTOR TERMINAL BLOCK
FAST-RELEASE (OVER EXCITATION)
FAST STOPPING (DC-SWITCHING)

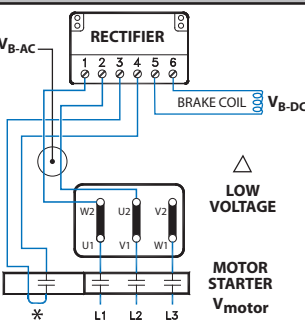

MOTOR	RECTIFIER	Vmotor	VB-AC	VB-DC
208Δ/360Y	GPE20L	208 VAC	208 VAC	105 VDC
230Δ/400Y	GPE20L	230 VAC	230 VAC	105 VDC
400Δ/690Y	GPE40L	400 VAC	400 VAC	180 VDC
460Δ/Y	GPE40L	460 VAC	460 VAC	205 VDC

GP102E — 35

POWERED FROM MOTOR TERMINAL BLOCK
FAST-RELEASE (OVER EXCITATION)
FAST STOPPING (DC-SWITCHING)

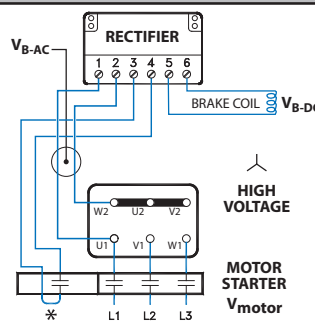

MOTOR	RECTIFIER	Vmotor	VB-AC	VB-DC
230Δ/400Y	GPE20L	400 VAC	230 VAC	105 VDC
332Δ/575Y	GPE40L	575 VAC	332 VAC	180 VDC

GP103A — 40

POWERED FROM MOTOR TERMINAL BLOCK
STANDARD RELEASE
VERY FAST STOPPING
(DC-SWITCHING + REDUCED POWER HOLDING)

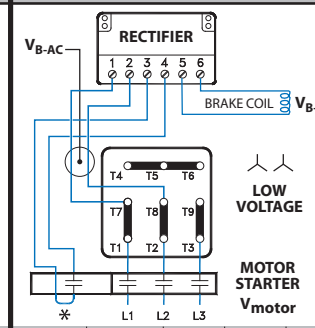

MOTOR	RECTIFIER	Vmotor	VB-AC	VB-DC
230YY/460Y	GPE20L	230 VAC	230 VAC	205 VDC

GP103B — 40

POWERED FROM MOTOR TERMINAL BLOCK
STANDARD RELEASE
VERY FAST STOPPING
(DC-SWITCHING + REDUCED POWER HOLDING)

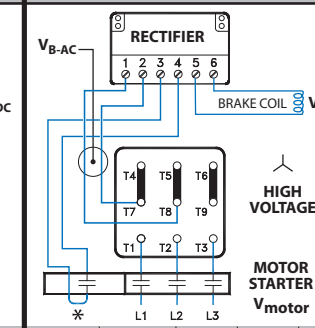

MOTOR	RECTIFIER	Vmotor	VB-AC	VB-DC
230YY/460Y	GPE20L	460 VAC	230 VAC	205 VDC

✱ The normally open contact/s (NO) is not supplied by NORD. It must close at the same time power is supplied to the brake. The contact must be capable of switching inductive loads and/or be rated IEC AC3.

= Braking Method

Send Quote Requests to info@automatedpt.com
Call +1(800)985-6929 To Order or Order Online At Nordgearmotors.com

NORD DRIVESYSTEMS

Connections GPU Rectifiers

GPU Rectifier - Connection Diagrams

GP103C — 40

POWERED FROM MOTOR TERMINAL BLOCK
STANDARD RELEASE
VERY FAST STOPPING
(DC-SWITCHING + REDUCED POWER HOLDING)

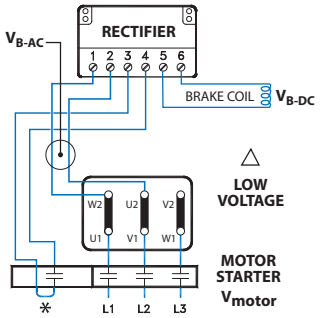

MOTOR	RECTIFIER	V_{motor}	V_{B-AC}	V_{B-DC}
208Δ/360Y	GPE20L	208 VAC	208 VAC	180 VDC
230Δ/400Y	GPE20L	230 VAC	230 VAC	205 VDC

GP103D — 40

POWERED FROM MOTOR TERMINAL BLOCK
STANDARD RELEASE
VERY FAST STOPPING
(DC-SWITCHING + REDUCED POWER HOLDING)

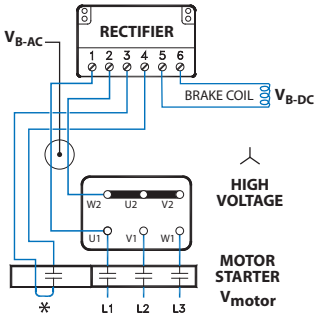

MOTOR	RECTIFIER	V_{motor}	V_{B-AC}	V_{B-DC}
230Δ/400Y	GPE20L	400 VAC	230 VAC	205 VDC

GP104A — 45

SEPERATE POWER SOURCE
FAST-RELEASE (OVER EXCITATION)
NORMAL STOPPING (AC-SWITCHING)

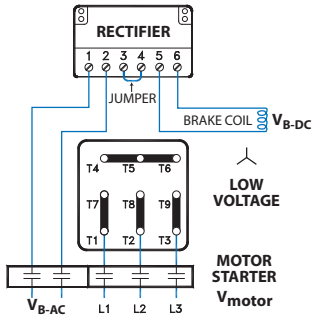

MOTOR	RECTIFIER	V_{motor}	V_{B-AC}	V_{B-DC}
230YY/460Y	GPU20L	230 VAC	230 VAC	105 VDC

GP104B — 45

SEPERATE POWER SOURCE
FAST-RELEASE (OVER EXCITATION)
NORMAL STOPPING (AC-SWITCHING)

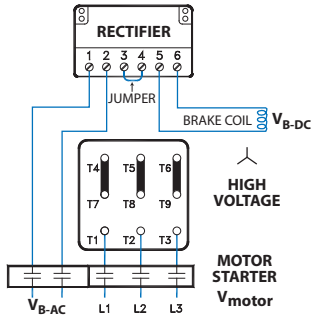

MOTOR	RECTIFIER	V_{motor}	V_{B-AC}	V_{B-DC}
230YY/460Y	GPU20L	460 VAC	230 VAC	105 VDC

GP104C — 45

SEPERATE POWER SOURCE
FAST-RELEASE (OVER EXCITATION)
NORMAL STOPPING (AC-SWITCHING)

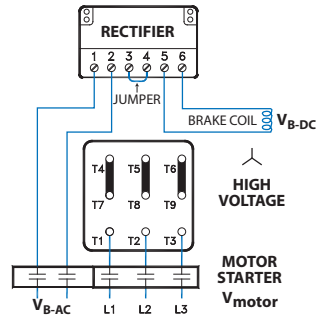

MOTOR	RECTIFIER	V_{motor}	V_{B-AC}	V_{B-DC}
230YY/460Y	GPU40L	460 VAC	460 VAC	205 VDC

GP104D — 45

SEPERATE POWER SOURCE
FAST-RELEASE (OVER EXCITATION)
NORMAL STOPPING (AC-SWITCHING)

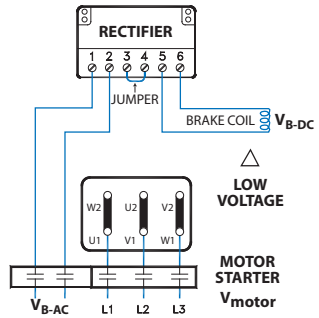

MOTOR	RECTIFIER	V_{motor}	V_{B-AC}	V_{B-DC}
208Δ/360Y	GPU20L	208 VAC	208 VAC	105 VDC
230Δ/400Y	GPU20L	230 VAC	230 VAC	105 VDC
400Δ/690Y	GPU40L	400 VAC	400 VAC	180 VDC
460Δ/Y	GPU40L	460 VAC	460 VAC	205 VDC

GP104E — 45

SEPERATE POWER SOURCE
FAST-RELEASE (OVER EXCITATION)
NORMAL STOPPING (AC-SWITCHING)

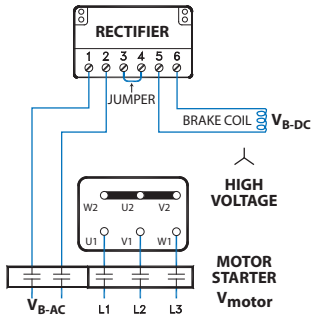

MOTOR	RECTIFIER	V_{motor}	V_{B-AC}	V_{B-DC}
230Δ/400Y	GPU20L	400 VAC	230 VAC	105 VDC
332Δ/575Y	GPU40L	575 VAC	332 VAC	180 VDC

GP105A — 50

SEPERATE POWER SOURCE
FAST-RELEASE (OVER EXCITATION)
FAST STOPPING (DC-SWITCHING)

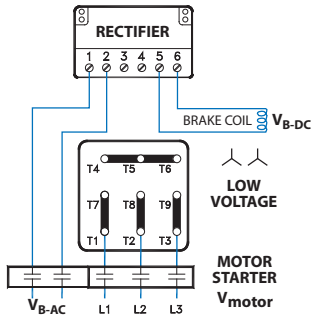

MOTOR	RECTIFIER	V_{motor}	V_{B-AC}	V_{B-DC}
230YY/460Y	GPU20L	230 VAC	230 VAC	105 VDC

GP105B — 50

SEPERATE POWER SOURCE
FAST-RELEASE (OVER EXCITATION)
FAST STOPPING (DC-SWITCHING)

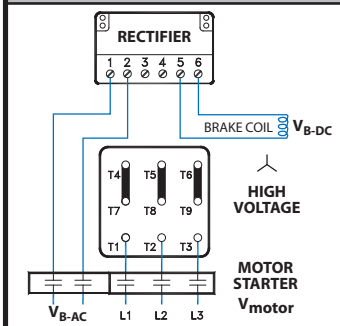

MOTOR	RECTIFIER	V_{motor}	V_{B-AC}	V_{B-DC}
230YY/460Y	GPU20L	460 VAC	230 VAC	105 VDC

GP105C — 50

SEPERATE POWER SOURCE
FAST-RELEASE (OVER EXCITATION)
FAST STOPPING (DC-SWITCHING)

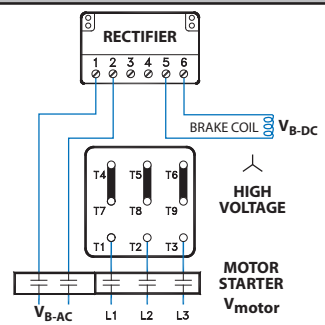

MOTOR	RECTIFIER	V_{motor}	V_{B-AC}	V_{B-DC}
230YY/460Y	GPU40L	460 VAC	460 VAC	205 VDC

GP105D — 50

SEPERATE POWER SOURCE
FAST-RELEASE (OVER EXCITATION)
FAST STOPPING (DC-SWITCHING)

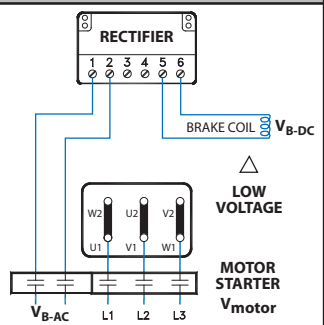

MOTOR	RECTIFIER	V_{motor}	V_{B-AC}	V_{B-DC}
208Δ/360Y	GPU20L	208 VAC	208 VAC	105 VDC
230Δ/400Y	GPU20L	230 VAC	230 VAC	105 VDC
400Δ/690Y	GPU40L	400 VAC	400 VAC	180 VDC
460Δ/Y	GPU40L	460 VAC	460 VAC	205 VDC

GP105E — 50

SEPERATE POWER SOURCE
FAST-RELEASE (OVER EXCITATION)
FAST STOPPING (DC-SWITCHING)

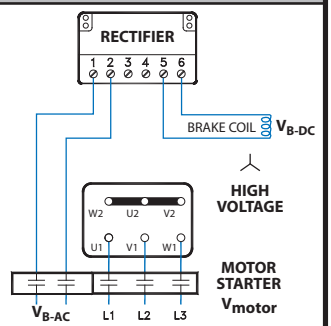

MOTOR	RECTIFIER	V_{motor}	V_{B-AC}	V_{B-DC}
230Δ/400Y	GPU20L	400 VAC	230 VAC	105 VDC
332Δ/575Y	GPU40L	575 VAC	332 VAC	180 VDC

✱ The normally open contact/s (NO) is not supplied by NORD. It must close at the same time power is supplied to the brake. The contact must be capable of switching inductive loads and/or be rated IEC AC3.

= Braking Method

BRAKES

Send Quote Requests to info@automatedpt.com
Call +1(800)985-6929 To Order or Order Online At Nordgearmotors.com

Connections
GPE & GPU Rectifiers

NORD DRIVESYSTEMS

GPE & GPU Rectifier - Connection Diagrams

GP106A — SEPERATE POWER SOURCE, STANDARD RELEASE, VERY FAST STOPPING (DC-SWITCHING + REDUCED POWER HOLDING) — 55

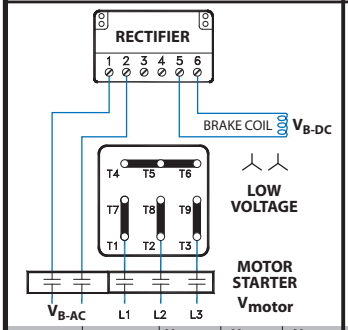

MOTOR	RECTIFIER	V_{motor}	V_{B-AC}	V_{B-DC}
230YY/460Y	GPU20L	230 VAC	230 VAC	205 VDC

GP106B — SEPERATE POWER SOURCE, STANDARD RELEASE, VERY FAST STOPPING (DC-SWITCHING + REDUCED POWER HOLDING) — 55

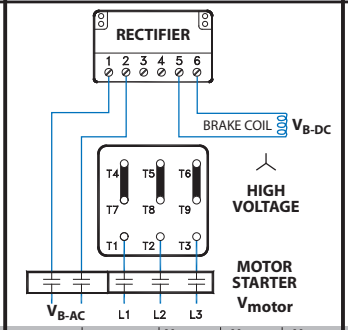

MOTOR	RECTIFIER	V_{motor}	V_{B-AC}	V_{B-DC}
230YY/460Y	GPU20L	460 VAC	230 VAC	205 VDC

GP106C — SEPERATE POWER SOURCE, STANDARD RELEASE, VERY FAST STOPPING (DC-SWITCHING + REDUCED POWER HOLDING) — 55

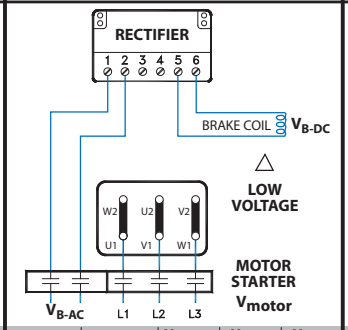

MOTOR	RECTIFIER	V_{motor}	V_{B-AC}	V_{B-DC}
208Δ/360Y	GPU20L	208 VAC	208 VAC	180 VDC
230Δ/400Y	GPU20L	230 VAC	230 VAC	205 VDC

GP106D — SEPERATE POWER SOURCE, STANDARD RELEASE, VERY FAST STOPPING (DC-SWITCHING + REDUCED POWER HOLDING) — 55

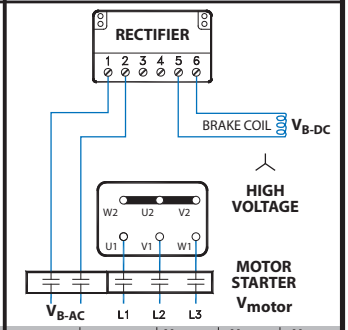

MOTOR	RECTIFIER	V_{motor}	V_{B-AC}	V_{B-DC}
230Δ/400Y	GPU20L	400 VAC	230 VAC	205 VDC

PMG101A — POWERED FROM MOTOR TERMINAL BLOCK, FAST-RELEASE (OVER EXCITATION), NORMAL STOPPING (AC-SWITCHING) — 30

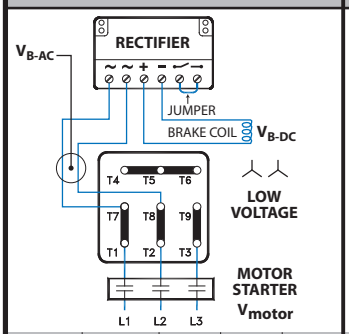

MOTOR	RECTIFIER	V_{motor}	V_{B-AC}	V_{B-DC}
230YY/460Y	PMG500	230 VAC	230 VAC	105 VDC

PMG101B — POWERED FROM MOTOR TERMINAL BLOCK, FAST-RELEASE (OVER EXCITATION), NORMAL STOPPING (AC-SWITCHING) — 30

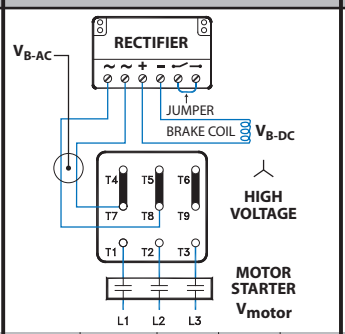

MOTOR	RECTIFIER	V_{motor}	V_{B-AC}	V_{B-DC}
230YY/460Y	PMG500	460 VAC	230 VAC	105 VDC

PMG101C — POWERED FROM MOTOR TERMINAL BLOCK, FAST-RELEASE (OVER EXCITATION), NORMAL STOPPING (AC-SWITCHING) — 30

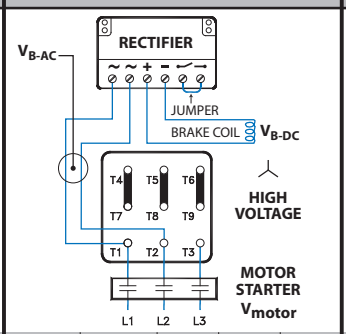

MOTOR	RECTIFIER	V_{motor}	V_{B-AC}	V_{B-DC}
230YY/460Y	PMG500	460 VAC	460 VAC	205 VDC

PMG101D — POWERED FROM MOTOR TERMINAL BLOCK, FAST-RELEASE (OVER EXCITATION), NORMAL STOPPING (AC-SWITCHING) — 30

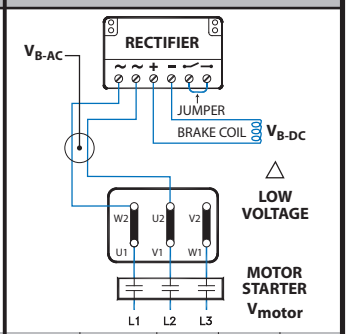

MOTOR	RECTIFIER	V_{motor}	V_{B-AC}	V_{B-DC}
208Δ/360Y	PMG500	208 VAC	208 VAC	105 VDC
230Δ/400Y	PMG500	230 VAC	230 VAC	105 VDC
400Δ/690Y	PMG500	400 VAC	400 VAC	180 VDC
460Δ/Y	PMG500	460 VAC	460 VAC	205 VDC

PMG101E — POWERED FROM MOTOR TERMINAL BLOCK, FAST-RELEASE (OVER EXCITATION), NORMAL STOPPING (AC-SWITCHING) — 30

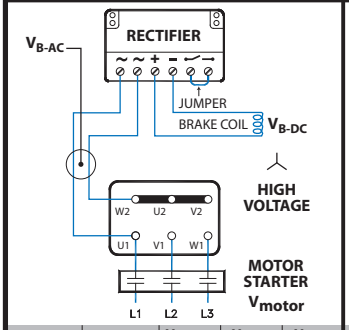

MOTOR	RECTIFIER	V_{motor}	V_{B-AC}	V_{B-DC}
230Δ/400Y	PMG500	400 VAC	230 VAC	105 VDC

PMG102A — POWERED FROM MOTOR TERMINAL BLOCK, FAST-RELEASE (OVER EXCITATION), FAST STOPPING (DC-SWITCHING) — 35

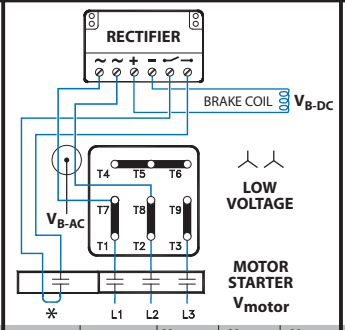

MOTOR	RECTIFIER	V_{motor}	V_{B-AC}	V_{B-DC}
230YY/460Y	PMG500	230 VAC	230 VAC	105 VDC

PMG102B — POWERED FROM MOTOR TERMINAL BLOCK, FAST-RELEASE (OVER EXCITATION), FAST STOPPING (DC-SWITCHING) — 35

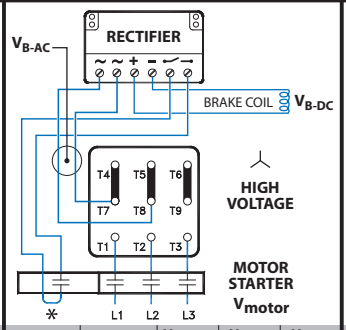

MOTOR	RECTIFIER	V_{motor}	V_{B-AC}	V_{B-DC}
230YY/460Y	PMG500	460 VAC	230 VAC	105 VDC

PMG102C — POWERED FROM MOTOR TERMINAL BLOCK, FAST-RELEASE (OVER EXCITATION), FAST STOPPING (DC-SWITCHING) — 35

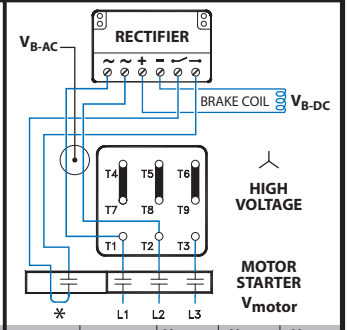

MOTOR	RECTIFIER	V_{motor}	V_{B-AC}	V_{B-DC}
230YY/460Y	PMG500	460 VAC	460 VAC	205 VDC

✱ The normally open contact/s (NO) is not supplied by NORD. It must close at the same time power is supplied to the brake. The contact must be capable of switching inductive loads and/or be rated IEC AC3.

= Braking Method

BRAKES

Send Quote Requests to info@automatedpt.com
Call +1(800)985-6929 To Order or Order Online At Nordgearmotors.com

NORD DRIVESYSTEMS

Connections PMG Rectifiers

PMG Rectifier - Connection Diagrams

PMG102D — 35
POWERED FROM MOTOR TERMINAL BLOCK
FAST-RELEASE (OVER EXCITATION)
FAST STOPPING (DC-SWITCHING)

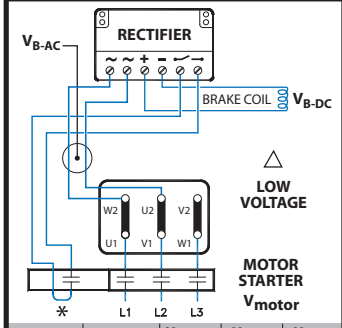

MOTOR	RECTIFIER	V_{motor}	V_{B-AC}	V_{B-DC}
208Δ/360Y	PMG500	208 VAC	208 VAC	105 VDC
230Δ/400Y	PMG500	230 VAC	230 VAC	105 VDC
400Δ/690Y	PMG500	400 VAC	400 VAC	180 VDC
460Δ/Y	PMG500	460 VAC	460 VAC	205 VDC

PMG102E — 35
POWERED FROM MOTOR TERMINAL BLOCK
FAST-RELEASE (OVER EXCITATION)
FAST STOPPING (DC-SWITCHING)

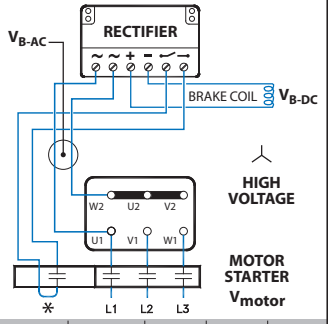

MOTOR	RECTIFIER	V_{motor}	V_{B-AC}	V_{B-DC}
230Δ/400Y	PMG500	400 VAC	230 VAC	105 VDC

PMG103A — 40
POWERED FROM MOTOR TERMINAL BLOCK
STANDARD RELEASE
VERY FAST STOPPING
(DC-SWITCHING + REDUCED POWER HOLDING)

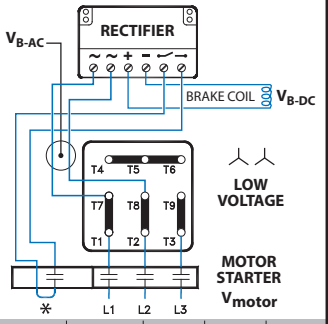

MOTOR	RECTIFIER	V_{motor}	V_{B-AC}	V_{B-DC}
230YY/460Y	PMG500	230 VAC	230 VAC	205 VDC

PMG103B — 40
POWERED FROM MOTOR TERMINAL BLOCK
STANDARD RELEASE
VERY FAST STOPPING
(DC-SWITCHING + REDUCED POWER HOLDING)

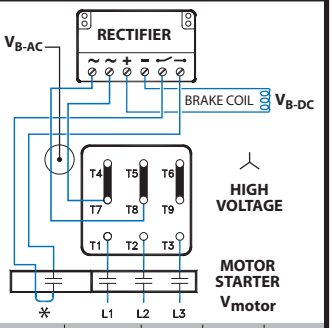

MOTOR	RECTIFIER	V_{motor}	V_{B-AC}	V_{B-DC}
230YY/460Y	PMG500	460 VAC	230 VAC	205 VDC

PMG103C — 40
POWERED FROM MOTOR TERMINAL BLOCK
STANDARD RELEASE
VERY FAST STOPPING
(DC-SWITCHING + REDUCED POWER HOLDING)

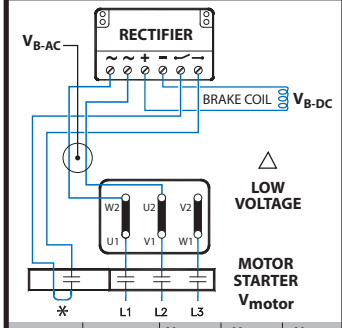

MOTOR	RECTIFIER	V_{motor}	V_{B-AC}	V_{B-DC}
208Δ/360Y	PMG500	208 VAC	208 VAC	180 VDC
230Δ/400Y	PMG500	230 VAC	230 VAC	205 VDC

PMG103D — 40
POWERED FROM MOTOR TERMINAL BLOCK
STANDARD RELEASE
VERY FAST STOPPING
(DC-SWITCHING + REDUCED POWER HOLDING)

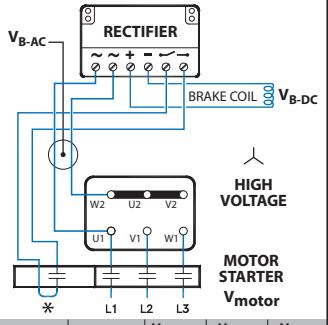

MOTOR	RECTIFIER	V_{motor}	V_{B-AC}	V_{B-DC}
230Δ/400Y	PMG500	400 VAC	230 VAC	205 VDC

PMG104A — 45
SEPERATE POWER SOURCE
FAST-RELEASE (OVER EXCITATION)
NORMAL STOPPING (AC-SWITCHING)

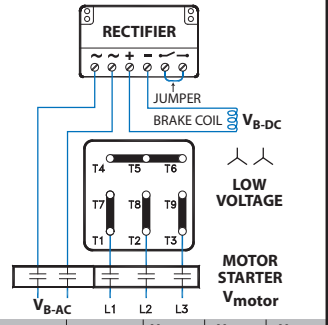

MOTOR	RECTIFIER	V_{motor}	V_{B-AC}	V_{B-DC}
230YY/460Y	PMG500	230 VAC	230 VAC	105 VDC

PMG104B — 45
SEPERATE POWER SOURCE
FAST-RELEASE (OVER EXCITATION)
NORMAL STOPPING (AC-SWITCHING)

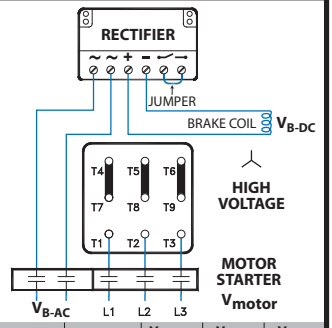

MOTOR	RECTIFIER	V_{motor}	V_{B-AC}	V_{B-DC}
230YY/460Y	PMG500	460 VAC	230 VAC	105 VDC

PMG104C — 45
SEPERATE POWER SOURCE
FAST-RELEASE (OVER EXCITATION)
NORMAL STOPPING (AC-SWITCHING)

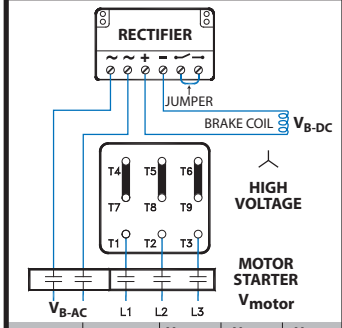

MOTOR	RECTIFIER	V_{motor}	V_{B-AC}	V_{B-DC}
230YY/460Y	PMG500	460 VAC	460 VAC	205 VDC

PMG104D — 45
SEPERATE POWER SOURCE
FAST-RELEASE (OVER EXCITATION)
NORMAL STOPPING (AC-SWITCHING)

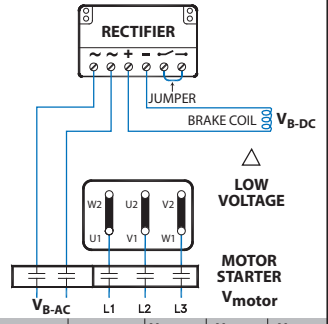

MOTOR	RECTIFIER	V_{motor}	V_{B-AC}	V_{B-DC}
208Δ/360Y	PMG500	208 VAC	208 VAC	105 VDC
230Δ/400Y	PMG500	230 VAC	230 VAC	105 VDC
400Δ/690Y	PMG500	400 VAC	400 VAC	180 VDC
460Δ/Y	PMG500	460 VAC	460 VAC	205 VDC

PMG104E — 45
SEPERATE POWER SOURCE
FAST-RELEASE (OVER EXCITATION)
NORMAL STOPPING (AC-SWITCHING)

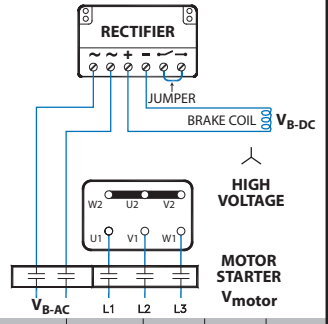

MOTOR	RECTIFIER	V_{motor}	V_{B-AC}	V_{B-DC}
230Δ/400Y	PMG500	400 VAC	230 VAC	105 VDC

PMG105A — 50
SEPERATE POWER SOURCE
FAST-RELEASE (OVER EXCITATION)
FAST STOPPING (DC-SWITCHING)

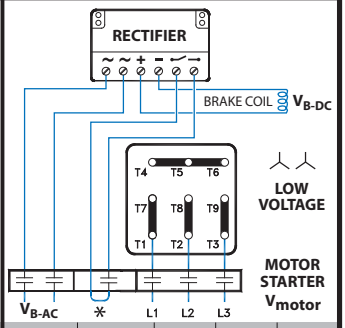

MOTOR	RECTIFIER	V_{motor}	V_{B-AC}	V_{B-DC}
230YY/460Y	PMG500	230 VAC	230 VAC	105 VDC

✱ The normally open contact/s (NO) is not supplied by NORD. It must close at the same time power is supplied to the brake. The contact must be capable of switching inductive loads and/or be rated IEC AC3.

● = Braking Method

BRAKES

Send Quote Requests to info@automatedpt.com
Call +1(800)985-6929 To Order or Order Online At Nordgearmotors.com

Connections
PMG Rectifiers

NORD DRIVESYSTEMS

PMG Rectifier - Connection Diagrams

PMG105B — 50

SEPERATE POWER SOURCE
FAST-RELEASE (OVER EXCITATION)
FAST STOPPING (DC-SWITCHING)

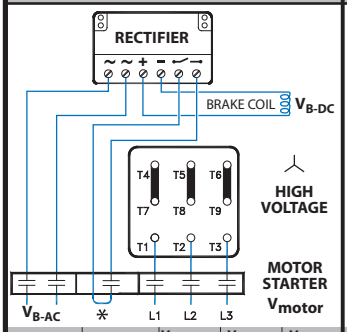

MOTOR	RECTIFIER	V_{motor}	V_{B-AC}	V_{B-DC}
230YY/460Y	PMG500	460 VAC	230 VAC	105 VDC

PMG105C — 50

SEPERATE POWER SOURCE
FAST-RELEASE (OVER EXCITATION)
FAST STOPPING (DC-SWITCHING)

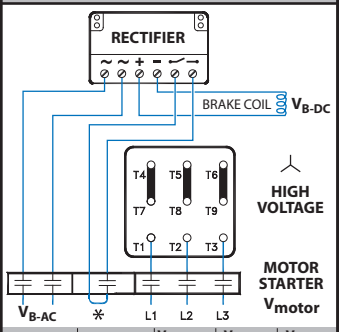

MOTOR	RECTIFIER	V_{motor}	V_{B-AC}	V_{B-DC}
230YY/460Y	PMG500	460 VAC	460 VAC	205 VDC

PMG105D — 50

SEPERATE POWER SOURCE
FAST-RELEASE (OVER EXCITATION)
FAST STOPPING (DC-SWITCHING)

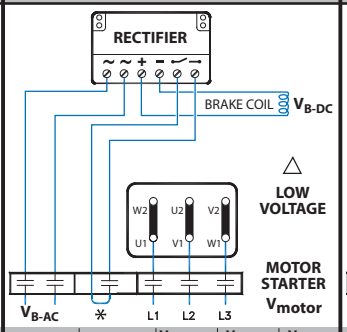

MOTOR	RECTIFIER	V_{motor}	V_{B-AC}	V_{B-DC}
208Δ/360Y	PMG500	208 VAC	208 VAC	105 VDC
230Δ/400Y	PMG500	230 VAC	230 VAC	105 VDC
400Δ/690Y	PMG500	400 VAC	400 VAC	180 VDC
460Δ/Y	PMG500	460 VAC	460 VAC	205 VDC

PMG105E — 50

SEPERATE POWER SOURCE
FAST-RELEASE (OVER EXCITATION)
FAST STOPPING (DC-SWITCHING)

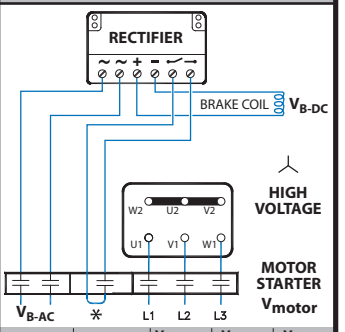

MOTOR	RECTIFIER	V_{motor}	V_{B-AC}	V_{B-DC}
230Δ/400Y	PMG500	400 VAC	230 VAC	105 VDC

PMG106A — 55

SEPERATE POWER SOURCE
STANDARD RELEASE
VERY FAST STOPPING
(DC-SWITCHING + REDUCED POWER HOLDING)

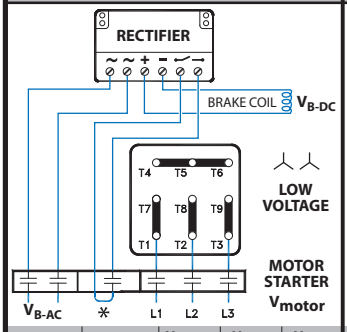

MOTOR	RECTIFIER	V_{motor}	V_{B-AC}	V_{B-DC}
230YY/460Y	PMG500	230 VAC	230 VAC	205 VDC

PMG106B — 55

SEPERATE POWER SOURCE
STANDARD RELEASE
VERY FAST STOPPING
(DC-SWITCHING + REDUCED POWER HOLDING)

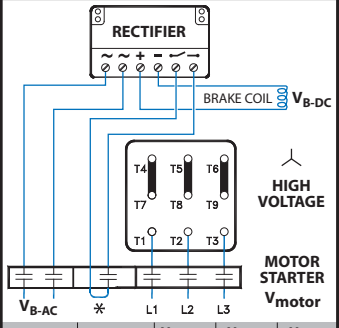

MOTOR	RECTIFIER	V_{motor}	V_{B-AC}	V_{B-DC}
230YY/460Y	PMG500	460 VAC	230 VAC	205 VDC

PMG106C — 55

SEPERATE POWER SOURCE
STANDARD RELEASE
VERY FAST STOPPING
(DC-SWITCHING + REDUCED POWER HOLDING)

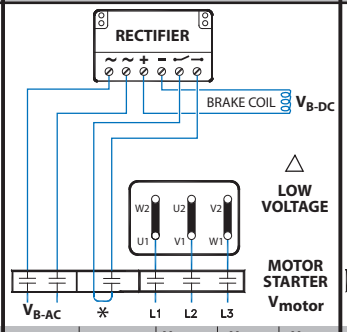

MOTOR	RECTIFIER	V_{motor}	V_{B-AC}	V_{B-DC}
208Δ/360Y	PMG500	208 VAC	208 VAC	180 VDC
230Δ/400Y	PMG500	230 VAC	230 VAC	205 VDC

PMG106D — 55

SEPERATE POWER SOURCE
STANDARD RELEASE
VERY FAST STOPPING
(DC-SWITCHING + REDUCED POWER HOLDING)

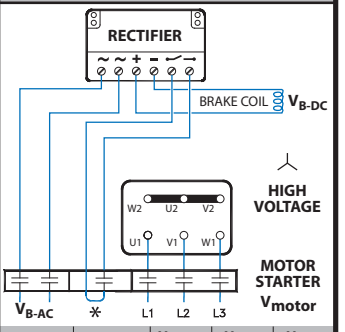

MOTOR	RECTIFIER	V_{motor}	V_{B-AC}	V_{B-DC}
230Δ/400Y	PMG500	400 VAC	230 VAC	205 VDC

BRAKES

✳ The normally open contact/s (NO) is not supplied by NORD. It must close at the same time power is supplied to the brake. The contact must be capable of switching inductive loads and/or be rated IEC AC3.

= Braking Method

Send Quote Requests to info@automatedpt.com
Call +1(800)985-6929 To Order or Order Online At Nordgearmotors.com

NORD DRIVESYSTEMS

Connections IR Relays

IR Relay Typical Connection Diagrams

IR101A

POWERED FROM MOTOR TERMINAL BLOCK
STANDARD-RELEASE
FAST STOPPING (DC-SWITCHING)

15

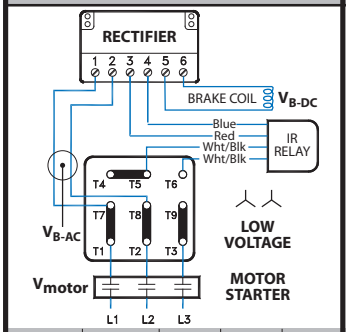

MOTOR	RECTIFIER	V_{motor}	V_{B-AC}	V_{B-DC}
208-230YY/460Y	GVE20	208VAC	230 VAC	205 VDC
230YY/460Y	GVE20	230 VAC	230 VAC	205 VDC

IR101B

POWERED FROM MOTOR TERMINAL BLOCK
STANDARD-RELEASE
FAST STOPPING (DC-SWITCHING)

15

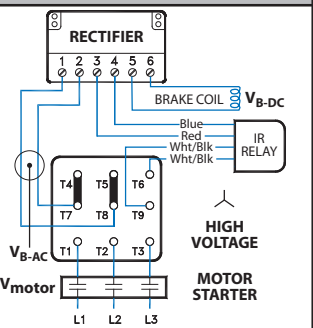

MOTOR	RECTIFIER	V_{motor}	V_{B-AC}	V_{B-DC}
230YY/460Y	GVE20	460 VAC	230 VAC	205 VDC

IR102A

POWERED FROM MOTOR TERMINAL BLOCK
STANDARD-RELEASE
FAST STOPPING (DC-SWITCHING)

15

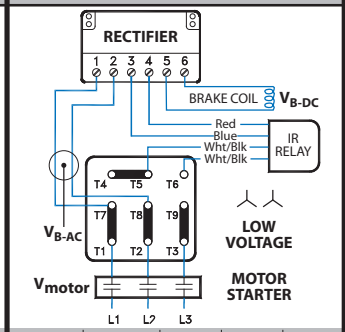

MOTOR	RECTIFIER	V_{motor}	V_{B-AC}	V_{B-DC}
208-230YY/460Y	GHE40	208VAC	230 VAC	105 VDC
230YY/460Y	GHE40	230 VAC	230 VAC	105 VDC

IR102B

POWERED FROM MOTOR TERMINAL BLOCK
STANDARD-RELEASE
FAST STOPPING (DC-SWITCHING)

15

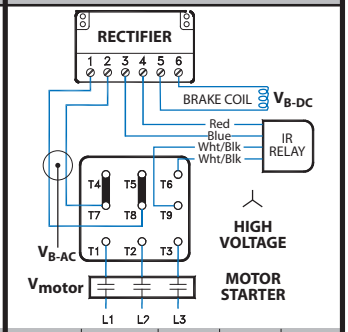

MOTOR	RECTIFIER	V_{motor}	V_{B-AC}	V_{B-DC}
230YY/460Y	GHE40	460 VAC	230 VAC	105 VDC

IR103

POWERED FROM MOTOR TERMINAL BLOCK
STANDARD-RELEASE
FAST STOPPING (DC-SWITCHING)

15

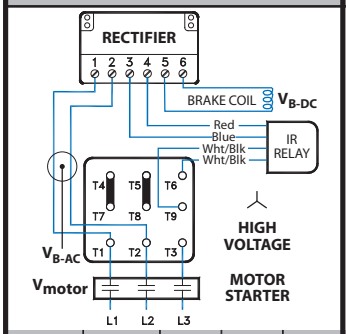

MOTOR	RECTIFIER	V_{motor}	V_{B-AC}	V_{B-DC}
230YY/460Y	GHE40	460 VAC	460VAC	205 VDC

IR301

POWERED FROM MOTOR TERMINAL BLOCK
STANDARD-RELEASE
FAST STOPPING (DC-SWITCHING)

15

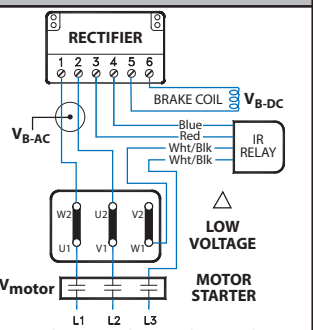

MOTOR	RECTIFIER	V_{motor}	V_{B-AC}	V_{B-DC}
208Δ/360Y	GVE20	208 VAC	208 VAC	180 VDC
230Δ/400Y	GVE20	230 VAC	230 VAC	205 VDC

IR401

POWERED FROM MOTOR TERMINAL BLOCK
STANDARD-RELEASE
FAST STOPPING (DC-SWITCHING)

15

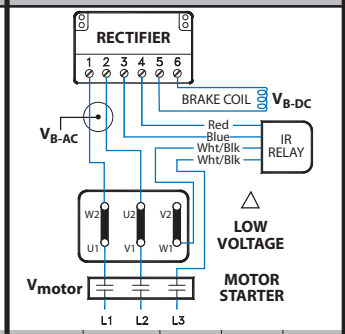

MOTOR	RECTIFIER	V_{motor}	V_{B-AC}	V_{B-DC}
460Δ/800Y	GHE40	460 VAC	460 VAC	205 VDC

IR501

POWERED FROM MOTOR TERMINAL BLOCK
STANDARD-RELEASE
FAST STOPPING (DC-SWITCHING)

15

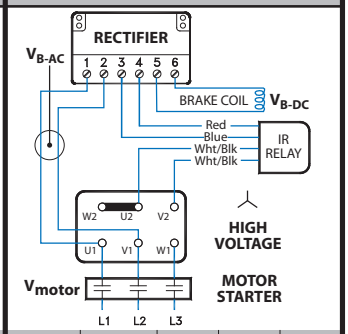

MOTOR	RECTIFIER	V_{motor}	V_{B-AC}	V_{B-DC}
332Δ/575Y	GHE50	575 VAC	575 VAC	250 VDC

IR601

POWERED FROM MOTOR TERMINAL BLOCK
STANDARD-RELEASE
FAST STOPPING (DC-SWITCHING)

15

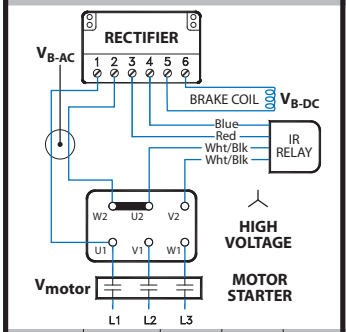

MOTOR	RECTIFIER	V_{motor}	V_{B-AC}	V_{B-DC}
230Δ/400Y	GVE20	400 VAC	230 VAC	205 VDC

IR602

POWERED FROM MOTOR TERMINAL BLOCK
STANDARD-RELEASE
FAST STOPPING (DC-SWITCHING)

15

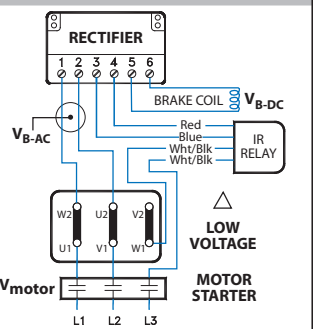

MOTOR	RECTIFIER	V_{motor}	V_{B-AC}	V_{B-DC}
400Δ/690Y	GHE40	400 VAC	400 VAC	180 VDC

CAUTIONS

Requirements

- Brake must be powered from the motor's terminal block (not seperately powered)
- Motor must be a single speed and should not be powered by a frequency inverter or soft starter.

BRAKES

Send Quote Requests to info@automatedpt.com
Call +1(800)985-6929 To Order or Order Online At Nordgearmotors.com

Connections
IR Relays

IR Relay with GUE40V Dual Wave Rectifier

IR701A — POWERED FROM MOTOR TERMINAL BLOCK — STANDARD-RELEASE — FAST STOPPING (DC-SWITCHING) — 15

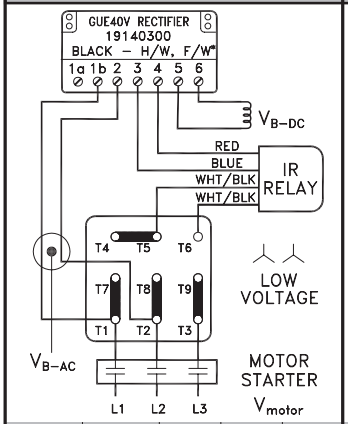

MOTOR	RECTIFIER	V_{motor}	V_{B-AC}	V_{B-DC}
208-230YY/460Y	GUE40V	208 VAC	230 VAC	205 VDC
230YY/460Y	GUE40V	230 VAC	230 VAC	205 VDC

IR701B — POWERED FROM MOTOR TERMINAL BLOCK — STANDARD-RELEASE — FAST STOPPING (DC-SWITCHING) — 15

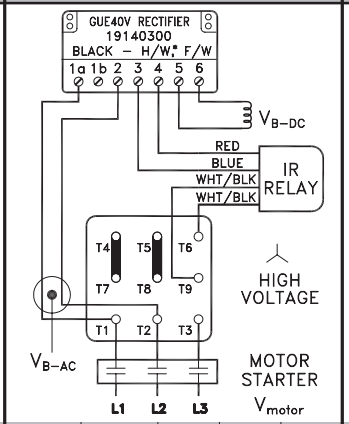

MOTOR	RECTIFIER	V_{motor}	V_{B-AC}	V_{B-DC}
208-230YY/460Y	GUE40V	460 VAC	460 VAC	205 VDC
230YY/460Y	GUE40V	460 VAC	460 VAC	205 VDC

IR702A — POWERED FROM MOTOR TERMINAL BLOCK — STANDARD-RELEASE — FAST STOPPING (DC-SWITCHING) — 15

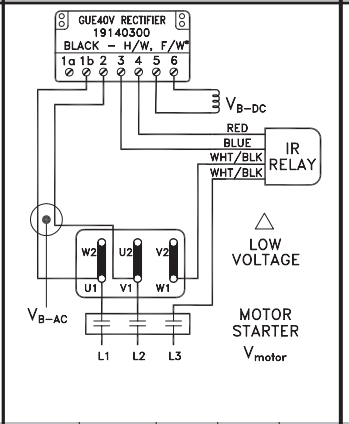

MOTOR	RECTIFIER	V_{motor}	V_{B-AC}	V_{B-DC}
208Δ/360Y	GUE40V	208 VAC	208 VAC	180 VDC
230Δ/400Y	GUE40V	230 VAC	230 VAC	205 VDC

IR702B — POWERED FROM MOTOR TERMINAL BLOCK — STANDARD-RELEASE — FAST STOPPING (DC-SWITCHING) — 15

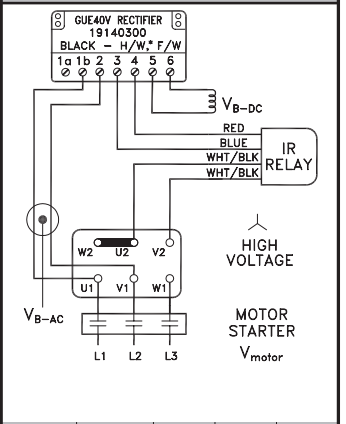

MOTOR	RECTIFIER	V_{motor}	V_{B-AC}	V_{B-DC}
230Δ/400Y	GUE40V	400 VAC	400 VAC	180 VDC

BRAKES

GPE Rectifier for External DC-Switching with IR Relay

IR151A — POWERED FROM MOTOR TERMINAL BLOCK — FAST RELEASE (OVER EXCITATION) — FAST STOPPING (DC-SWITCHING) — 35

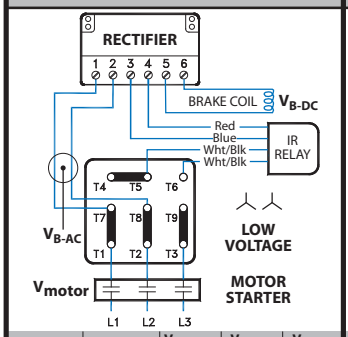

MOTOR	RECTIFIER	V_{motor}	V_{B-AC}	V_{B-DC}
230YY/460Y	GPE20L	230 VAC	230 VAC	105 VDC

IR151B — POWERED FROM MOTOR TERMINAL BLOCK — STANDARD-RELEASE — FAST STOPPING (DC-SWITCHING) — 35

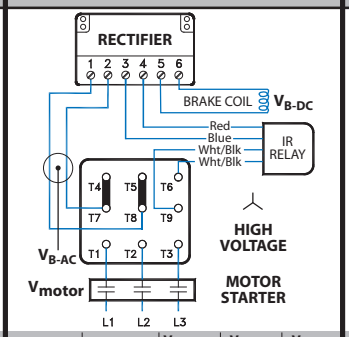

MOTOR	RECTIFIER	V_{motor}	V_{B-AC}	V_{B-DC}
230YY/460Y	GPE20L	460 VAC	230 VAC	105 VDC

IR152A — POWERED FROM MOTOR TERMINAL BLOCK — STANDARD-RELEASE — VERY FAST STOPPING (REDUCED POWER HOLD) — 40

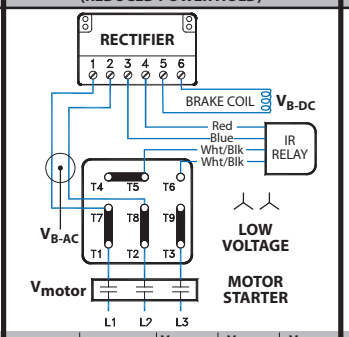

MOTOR	RECTIFIER	V_{motor}	V_{B-AC}	V_{B-DC}
230YY/460Y	GPE20L	230 VAC	230 VAC	205 VDC

IR152B — POWERED FROM MOTOR TERMINAL BLOCK — STANDARD-RELEASE — VERY FAST STOPPING (REDUCED POWER HOLD) — 40

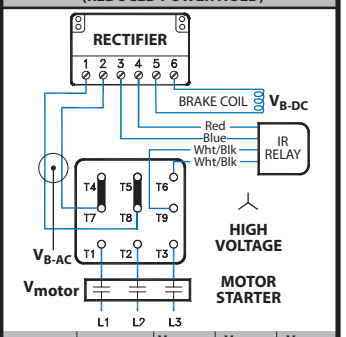

MOTOR	RECTIFIER	V_{motor}	V_{B-AC}	V_{B-DC}
230YY/460Y	GPE20L	460 VAC	230 VAC	205 VDC

CAUTIONS

Requirements

- Brake must be powered from the motor's terminal block (not seperately powered)
- Motor must be a single speed and should not be powered by a frequency inverter or soft starter.

Send Quote Requests to info@automatedpt.com
Call +1(800)985-6929 To Order or Order Online At Nordgearmotors.com

Connections Inverters

Inverter Driven Brakemotors

Connection Guide for Brakes with AC-Switching

VBR101

230/460V, 60Hz, 3Ø
BRAKE WITH HALF-WAVE RECTIFIER
WIRED TO SEPERATE POWER SOURCE
WITH INVERTER

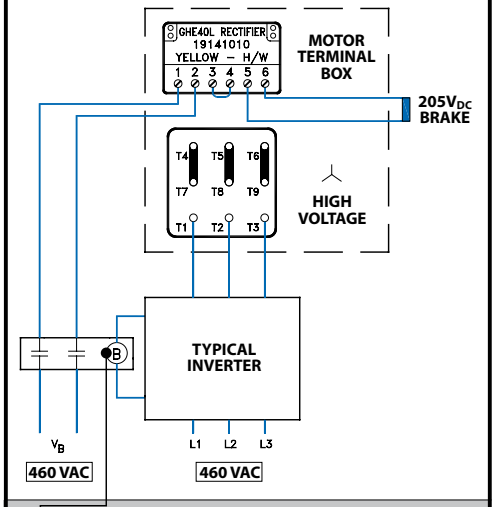

CONSULT INVERTER MANUFACTURER FOR RECOMMENDATION OF WIRING POWER TO THE MOTOR & BRAKE

VBR102

230/460V, 60Hz, 3Ø
BRAKE WITH FULL WAVE RECTIFIER
WIRED TO SEPERATE POWER SOURCE
WITH INVERTER

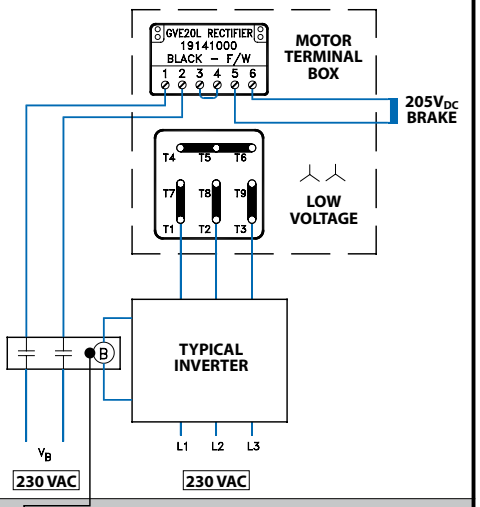

CONSULT INVERTER MANUFACTURER FOR RECOMMENDATION OF WIRING POWER TO THE MOTOR & BRAKE

Connection Guide for Brakes with DC-Switching

VBR101

230/460V, 60Hz, 3Ø
BRAKE WITH HALF-WAVE RECTIFIER
WIRED TO SEPERATE POWER SOURCE
WITH INVERTER & FAST BRAKE RESPONSE

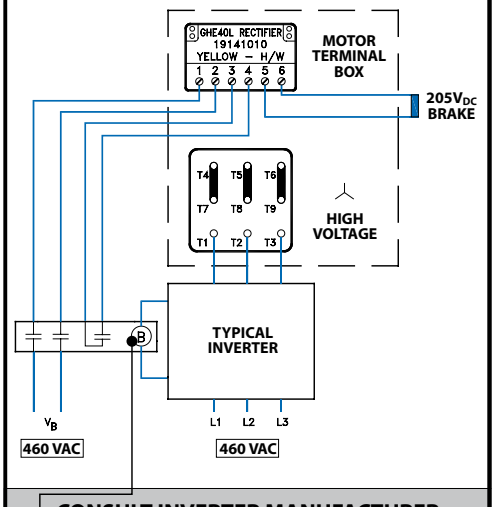

CONSULT INVERTER MANUFACTURER FOR RECOMMENDATION OF WIRING POWER TO THE MOTOR & BRAKE

VBR102

230/460V, 60Hz, 3Ø
BRAKE WITH FULL WAVE RECTIFIER
WIRED TO SEPERATE POWER SOURCE
WITH INVERTER & FAST BRAKE RESPONSE

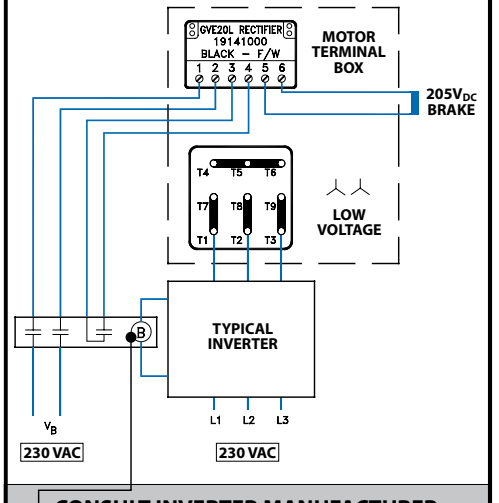

CONSULT INVERTER MANUFACTURER FOR RECOMMENDATION OF WIRING POWER TO THE MOTOR & BRAKE

BRAKES

Send Quote Requests to info@automatedpt.com
Call +1(800)985-6929 To Order or Order Online At Nordgearmotors.com

Send Quote Requests to info@automatedpt.com
Call +1(800)985-6929 To Order or Order Online At Nordgearmotors.com

Notes

NOTES

G1035 - Subject to Change Without Notice
Send Quote Requests to info@automatedpt.com
Call +1(800)985-6929 To Order or Order Online At Nordgearmotors.com

Send Quote Requests to info@automatedpt.com
Call +1(800)985-6929 To Order or Order Online At Nordgearmotors.com

AC Vector Drives

AC Vector Drives

- AC Vector Drive SK 200E
- AC Vector Drive SK 500E
- Dimensions

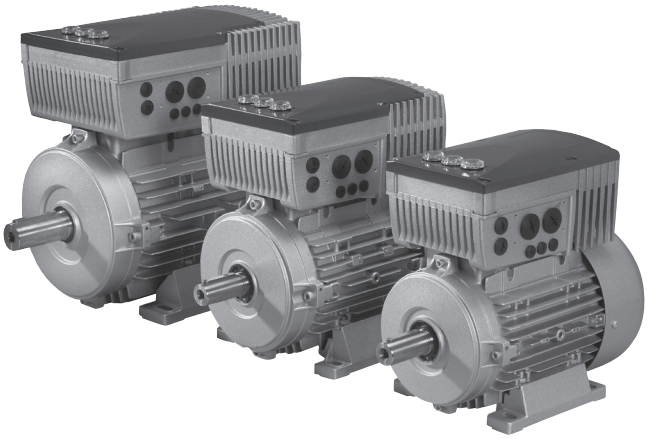

NORD® DRIVESYSTEMS

www.nord.com

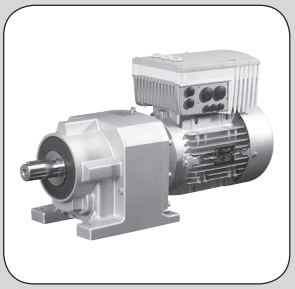

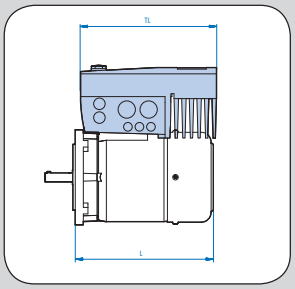

INVERTER DUTY MOTOR

Send Quote Requests to info@automatedpt.com
Call +1(800)985-6929 To Order or Order Online At Nordgearmotors.com

Send Quote Requests to info@automatedpt.com Call +1(800)985-6929 To Order or Order Online At Nordgearmotors.com

AC Vector Drive SK 200E Selection

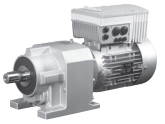

NORDAC SK 200E Motor Mounted AC Vector Drives

NORD has now added a new member to the distributed control family, the new SK 200E AC vector drive. This series is designed to be mounted directly on the motor terminal box to create a combined, fully integrated unit for use in the field.

The functional spectrum of the SK 200E ranges from simple drive applications to complex positioning control. Their low-cost design, variable equipment, compact size and their compatibility with various connection systems, makes them especially suitable for material handling, pumping, packaging, and a variety of other industrial and commercial applications.

Features of the SK 200E include, but not limited to:

- Sensorless & closed-loop vector control modes for superior speed regulation
- Positioning control capabilities
- Incremental encoder input as standard
- Mechanical brake rectifier and controls
- Configuration DIP switches for quick commissioning
- Plug-in storage module (EEPROM)
- "Safe Stop" and AS-Interface options
- Dynamic braking control for regenerative loads
- Various potentiometer and field bus modules for AC vector drive control
- IP55 & IP66 rated enclosures

SK 200E AC Vector Drive Ratings

- 1~115V 0.33 - 1 hp (0.25 - 0.75kW)
- 1~240V 0.33 - 1.5 hp (0.25 - 1.1 kW)
- 3~240V 0.33 - 15 hp (0.25 - 11 kW)
- 3~480V 0.75 - 30 hp (0.55 - 22 kW)

Electromechanical Brake Interface & Coil Voltage Selection

200E Selection

The SK 200E is supplied electro-mechanical brake controls with the use of a dedicated high voltage DC power supply. The SK 200E utilizes a half-wave rectifier and the brake coil voltage must be specified per the following table:

Nominal AC Input Voltage	Brake Coil Voltage
115/230 V	105 V
400 V	180 V
460/480 V	205 V

Selection Steps

1. SK 2X0E or 2X5E Inverter Selection:
Choose the SK 200E AC Vector drivebased on drive features, motor power rating, input voltage and protection class.

SK 2X0E - Component Class Drive
SK 2X5E - System Class Drive

2. SK 200E Motor Adapter Selection:
Select the required SK 200E motor adapter based on Frame size, Series, Input phases and protection class.

3. Option Module Selection (if required)**:**
Choose specific option modules such as 24VDC power supply, a speed POT or L-O-R switch, or a Fieldbus /IO Extension if they are required for your AC Vector Drives needs.

4. Technology Unit Adapter Selection (if required)**:**
Select an assembly adapter based on a specified technology unit and protection class if required.

5. Dynamic Braking Resistor Selection (if required)**:**
Choose a specific braking resistor based on its location as well as its voltage rating and number of phases if required for your Inverter selection.

6. Wall Mount Adapter Selection (if required)**:**
Select a wall mounting unit based on either frame size and/or technology unit if the unit is not to be mounted to a motor.

7. Programmer/Operator Selection (if required)**:**
Choose a specific type of programming/operation device based on specified needs. (if required)

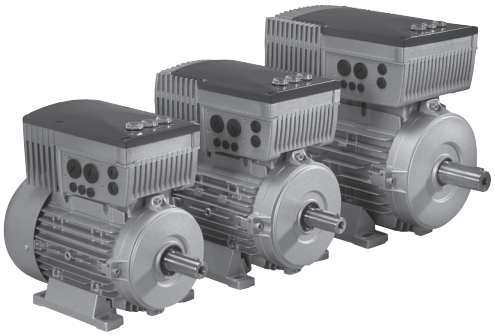

Send Quote Requests to info@automatedpt.com
Call +1(800)985-6929 To Order or Order Online At Nordgearmotors.com

Send Quote Requests to info@automatedpt.com Call +1(800)985-6929 To Order or Order Online At Nordgearmotors.com

NORD DRIVESYSTEMS

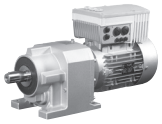

AC Vector Drive SK 200E Selection

SK200E AC Vector Drives

The range of performance allows users to select a compact device with exactly the features that are required for the particular application, thus ensuring an extremely efficient use of resources. All SK 200E versions have the same appearance, enabling uniform operation and handling. All devices and optional external technology units such as field bus or I/O systems can be linked via an integrated system bus to make integration much simpler.

		SK 200E	SK 205E	SK 210E	SK 215E	SK 220E	SK 225E	SK 230E	SK 235E
	Power range 0.33 - 30hp (0.25 kW - 22 kW) (IP55/IP66)	☑	☑	☑	☑	☑	☑	☑	☑
Design	Same Design	☑	☑	☑	☑	☑	☑	☑	☑
	Motor and Wall mounting Available	☑	☑	☑	☑	☑	☑	☑	☑
Characteristics	All standard drive functions	☑	☑	☑	☑	☑	☑	☑	☑
	Consistent parameter structure	☑	☑	☑	☑	☑	☑	☑	☑
	Multiple field bus systems available	☑	☑	☑	☑	☑	☑	☑	☑
Basic functions	Integrated 24V power supply	☑	❍	☑	❍	☑	❍	☑	❍
	24V Control voltage required		☑		☑		☑*		☑*
	Brake Management, mechanical motor brake	❍**	☑	❍**	☑	❍**	☑	❍**	☑
	Brake chopper (brake resistor optional)	☑	☑	☑	☑	☑	☑	☑	☑
	DC Braking	☑	☑	☑	☑	☑	☑	☑	☑
	Flying Start (catching a spinning motor)	☑	☑	☑	☑	☑	☑	☑	☑
	Sensorless current vector control (ISD control)	☑	☑	☑	☑	☑	☑	☑	☑
	Plug-in storage module (EEPROM)	☑	☑	☑	☑	☑	☑	☑	☑
	Line filter Class C2	☑	☑	☑	☑	☑	☑	☑	☑
	Switchable parameter sets	☑	☑	☑	☑	☑	☑	☑	☑
	Process controller / PID controller	☑	❍	☑	❍	☑	❍	☑	❍
	Incremental encoder evaluation ❶	☑	☑	☑	☑	☑	☑	☑	☑
	POSICON (positioning control) ❷	☑	☑	☑	☑	☑	☑	☑	☑
	Automatic flux adaptation (energy saving function)	☑	☑	☑	☑	☑	☑	☑	☑
Special functions	"Safe stop" function			☑	☑			☑	☑
	AS interface on board					☑	☑	☑	☑
Options	Bus modules with/without M12 plug connectors for I/Os	❍	❍	❍	❍	❍	❍	❍	❍
	I/O Modules	❍	❍	❍	❍	❍	❍	❍	❍
	Stand-alone operation (24V control power supply)	☑	❍	☑	❍	☑	❍*	☑	❍*
	Power connectors (e.g. Harting HAN 10E)	❍	❍	❍	❍	❍	❍	❍	❍
	Internal/external brake resistors	❍	❍	❍	❍	❍	❍	❍	❍
	Potentiometer versions	❍	❍	❍	❍	❍	❍	❍	❍

☑ Standard Functions ❍ Optional Functions * 24V Supply via AS-i ❍** Size 4 Includes brake management

❶ Requires HTL output encoder on motor for closed loop vector.

❷ With HTL output incremental encoder or CAN output absolute encoder.

AC VECTOR DRIVES

Send Quote Requests to info@automatedpt.com
Call +1(800)985-6929 To Order or Order Online At Nordgearmotors.com

AC Vector Drive
SK 200E

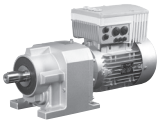

NORD DRIVESYSTEMS

Step 1: SK 2XXE Selection

SK	Component Class ❶	E	kW Rating ❷	-	Input Voltage ❸	Protection Class ❹

SK	System Class ❶	E	kW Rating ❷	-	Input Voltage ❸	Protection Class ❹

❶ Component Class Series
200 - Basic Unit
210 - Basic Unit + Safe Stop Function
220 - Basic Unit + AS Interface
230 - Basic Unit + AS Interface + Safe Stop

❶ System Class Series
205 - Basic Unit
215 - Basic Unit + Safe Stop Function
225 - Basic Unit + AS Interface
235 - Basic Unit + AS Interface + Safe Stop

❷ Power Rating
250 - 0.25 kW (0.33 hp)
370 - 0.37 kW (0.50 hp)
550 - 0.55 kW (0.75 hp)
750 - 0.75 kW (1.00 hp)
111 - 1.1 kW (1.50 hp)
151 - 1.5 kW (2.00 hp)
221 - 2.2 kW (3.00 hp)
301 - 3.0 kW (4.00 hp)
401 - 4.0 kW (5.00 hp)
551 - 5.5 kW (7.50 hp)
751 - 7.5 kW (10.0 hp)

❷ Power Rating
250 - 0.25 kW (0.33 hp)
370 - 0.37 kW (0.50 hp)
550 - 0.55 kW (0.75 hp)
750 - 0.75 kW (1.00 hp)
111 - 1.1 kW (1.50 hp)
151 - 1.5 kW (2.00 hp)
221 - 2.2 kW (3.00 hp)
301 - 3.0 kW (4.00 hp)
401 - 4.0 kW (5.00 hp)
551 - 5.5 kW (7.50 hp)
751 - 7.5 kW (10.0 hp)

❸ Input Voltage
112-O - 100-120V, 1-phase (0.25-0.75 kW) (0.33-1 hp)
123-A - 200-240V, 1-phase (0.25-1.1 kW) (0.33-1.5 hp)
323-A - 200-240V, 3-phase (0.25-4.0 kW) (0.33 - 5 hp)
323-A - 200-240V, 3-phase (0.5.5-11 kW) (7.5 - 15 hp) *** Size 4 only**
340-A - 380-480V, 3-phase (0.75-7.5 kW) (1-10 hp)
340-A - 380-480V, 3-phase (11-22 kW) (15-30 hp) *** Size 4 only**

❸ Input Voltage
112-O - 100-120V, 1-phase (0.25-0.75 kW) (0.33-1 hp)
123-A - 200-240V, 1-phase (0.25-0.55 kW) (0.33-0.75 hp)
323-A - 200-240V, 3-phase (0.25-4.0 kW) (0.33 - 5 hp)
340-A - 380-480V, 3-phase (0.75-7.5 kW) (1-10 hp)

❹ Protection Class
Blank - IP55
-C - IP66

❹ Protection Class
Blank - IP55
-C - IP66

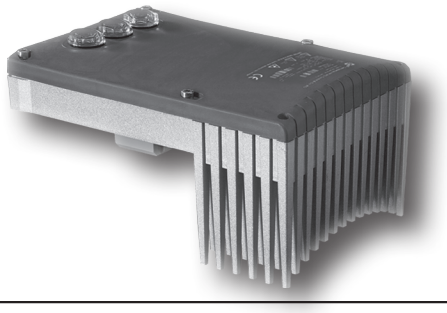

AC VECTOR DRIVES

Send Quote Requests to info@automatedpt.com
Call +1(800)985-6929 To Order or Order Online At Nordgearmotors.com

NORD DRIVESYSTEMS

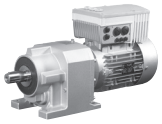

AC Vector Drive SK 200E

Step 2: SK 200E Motor Adapter Selection

	Frame Size		Series		# of Input Phases	Protection Class
SK TI4	❺	E	❶	-	❻	❹

❺ Frame Size
• 1 - 100-120V, 1-phase (0.25-0.37 kW) (0.33-0.50 hp) - 200-240V, 1-phase (0.25-0.55 kW) (0.33-0.75 hp) - 200-240V, 3-phase (0.25-1.1 kW) (0.33-1.5 hp) - 380-480V, 3-phase (0.75-2.2 kW) (0.33-3 hp)
• 2 - 100-120V, 1-phase (0.55-0.75 kW) (0.75-1.0 hp) - 200-240V, 1-phase (0.75-1.1 kW) (1-1.5 hp) - 200-240V, 3-phase (1.5-2.2 kW) (2-3 hp) - 380-480V, 3-phase (3.0-4.0 kW) (4-5 hp)
• 3 - 200-240V, 3-phase (3.0-4.0 kW) (4-5 hp) - 380-480V, 3-phase (5.0-7.5 kW) 6.5-10 hp)
• 4 - 200-240V, 3-phase (5.5-11.0 kW) (7.5-15 hp) - 380-480V, 3-phase (11.0-22.0 kW) (15-30 hp)

❶ Series
200 - Basic Unit (Component Class)
205 - Basic Unit (System Class)
210 - Basic Unit + Safe Stop Function (Component Class)
215 - Basic Unit + Safe Stop Function (System Class)
220 - Basic Unit + AS Interface (Component Class)
225 - Basic Unit + AS Interface (System Class)
230 - Basic Unit + AS Interface + Safe Stop (Component Class)
235 - Basic Unit + AS Interface + Safe Stop (System Class)

❻ # of Input Phases
3 - 3-phase

❹ Protection Class
Blank - IP55
- C - IP66

Motor Adapter Interface

The SK 200E requires a motor adapter/interface so it may be properly mounted to the motor or to an appropriate wall-mount bracket. The motor adapter houses the input power and motor terminals, as well as the standard control I/O. The motor adapter also allows the user to install internal option modules and dynamic braking resistors. The outside of the motor adapter has provisions to install external option modules and dynamic braking resisters, as well as quick-disconnect power and control connectors.

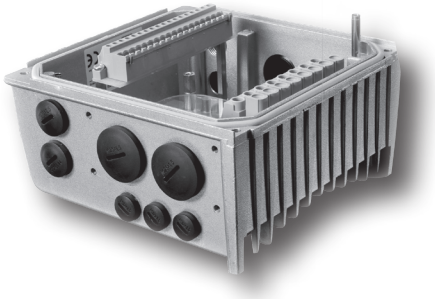

AC VECTOR DRIVES

Send Quote Requests to info@automatedpt.com
Call +1(800)985-6929 To Order or Order Online At Nordgearmotors.com

Send Quote Requests to info@automatedpt.com
Call +1(800)985-6929 To Order or Order Online At Nordgearmotors.com

AC Vector Drive SK 200E

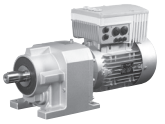

NORD DRIVESYSTEMS

Step 3: 24VDC Power Supply Selection (if required)

	Module Type		Module Input Voltage*	Protection Class*
SK	❼	- 24V -	❽	❹

* applies only to external "TU4" units

❼ Module Type (Internal/External)
CU4 - Internal Customer Unit
TU4 - External Technology Unit

❽ Module Input Voltage
123B - All 100-120V & 200-240V Units
140B - All 380-480V Units

❹ Protection Class
Blank - IP55
-C - IP66

Step 3: Speed POT & L-O-R Switch (if required)

	Module Type		Module Input Voltage*	Protection Class*
SK	❼	- POT -	❽	❹

* applies only to external "TU4" units

❼ Module Type (Internal/External)
CU4 - Internal Customer Unit
TU4 - External Technology Unit

❽ Module Input Voltage
123B - All 100-120V & 200-240V Units
140B - All 380-480V Units

❹ Protection Class
Blank - IP55
-C - IP66

Step 3: Fieldbus / IO Extention Selection (if required)

	Module Type		Fieldbus/IOE Option		M12 Connect Option*	Protection Class*
SK	❼	-	❾	-	❿	❹

* applies only to external "TU4" units

❼ Module Type (Internal/External)
CU4 - Internal Customer Unit
TU4 - External Technology Unit

❾ Fieldbus, I/O Extension Module
PBR - Profibus
CAO - CANopen
DEV - DeviceNet
IOE - I/O Extension

❿ M12 Connectors for Module I/O
Blank - Not required
M12 - M12 Connectors Included

❹ Protection Class
Blank - IP55
-C - IP66

AC VECTOR DRIVES

Customer Units

Internal customer interfaces enable the expansion of the range of functions of SK 200E AC vector drive without changing the physical size. Users have access to communication modules, an internal control power module or an I/O expansion.

Technology Units

For the distributed control SK 200E AC vector drives, optional technology units are available.

These units may be mounted directly on the device or separately on the machine frame or plant component. Communication systems both with & without connection facilities for sensors, actuators and control modules are available for most current applications. All external technology adapters require an adapter for proper operation and coordination with the SK 200E. (SK TI4-TU-XXX selection on page 313)

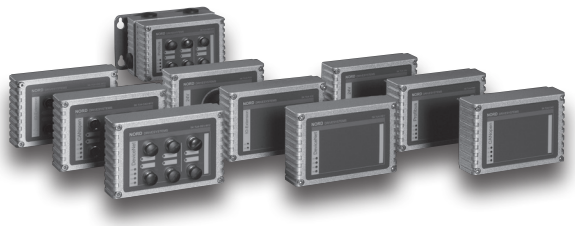

Customer & Technology Unit Options Include:

- 24Vdc power supply
- Potentiometer & start/stop selector switch
- Expanded I/O control
- Profibus
- CANopen
- DeviceNet

Send Quote Requests to info@automatedpt.com
Call +1(800)985-6929 To Order or Order Online At Nordgearmotors.com

Send Quote Requests to info@automatedpt.com
Call +1(800)985-6929 To Order or Order Online At Nordgearmotors.com

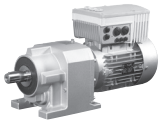

Step 4: Technology Unit Adaptor Selection
(required for all "SK TU44-xxx" modules)

	Assembly Adaptor for TU4*	Protection Class*
SK TI4-TU-	⓫	❹

* applies only to external "TU4" units

⓫ Assembly Adaptor for TU4 Technology Units
BUS - For all PBR, CAO, DEV, and IOE Technology Units
NET - For all 24V and POT Technology Units

❹ Protection Class
Blank - IP55
-C - IP66

Step 5:Dynamic Braking Resistor Selection (if required)

	Dynamic Braking Resistor Location	Dynamic Braking Resistor Rating
SK TI4-TU-	⓬	⓭

⓬ Dynamic Braking Resistor Location
BUS - For all PBR, CAO, DEV, and IOE Technology Units
NET - For all 24V and POT Technology Units

⓭ Dynamic Braking Resistor Rating
1-100-100 - 100-120V, 1-phase & 200-240V 1-phase (all ratings)
1-200-100 - 200-240V, 3-phase (0.25-2.2 kW)
2-100-200 - 200-240V, 3-phase (3.0-4.0 kW)
1-400-100 - 380-480V, 3-phase (0.55-4.0 kW)
2-200-200 - 380-480V, 3-phase (5.5-7.5 kW)

Step 6: Wall Mount Adaptor Selection (if required)

	Selection Code For Adaptor
SK TIE4-WMK-	⓮

⓮ Selection Code for Adaptor
1 - For inverter frame sizes 1 & 2**
2 - For inverter frame size 3**
TU - For external Technology Units

** See Box ❺ on page 311 for frame sizes

Step 7: Programmer/Operation Device (if required)

Programmer/Operation Device Selection
❑ **SK CSX-3H -** Simple Box (LED Display)
❑ **SK PAR-3H -** Parameter Box (LCD English Display)
❑ **SK PAR-2E -** Panel Mount Parameter Box (LCD English Display)
❑ **RJ12-SUB/D -** PC Cable for NORDCON software

Dynamic Braking Resistor

The SK 200E also has options for internal and external dynamic braking resistors (DBR). A DBR is used for applications with regenerative loads such as lifting, cyclical, and high inertia loads. The DBR will dissipate the regenerative energy from the motor as heat using the internal brake chopper that is provided with the SK 200E.

Wall Mount Kit

The SK 200E may be installed away from the motor with the use of a wall-mount kit. The motor adapter is mounted on the wall-mount kit instead of on the motor conduit box and may be installed on a wall, piece of machinery, or in a panel. The IP55 or IP66 protection is maintained when used with a wall-mount kit.

Programming Tools

A variety of programming and operation interfaces are available for the SK 200E. The SK PAR-3H (hand-held) and SK PAR-2E (panel mount) provide programming, troubleshooting, and operation controls with an easy to use LCD English display. These modules have the capability of storing up to 5 different parameter sets for simple transfer of settings to other units.

The SK CSX-3H is used in a similar fashion as the SK PAR-3H and SK PAR-2E, but implements a bright, 4-digit 7-segment LED display.

With the use of Nord's RJ12-SUB/D cable, users may connect a SK 200E to a PC and configure it with NORDCON software. NORDCON is a Windows-based program that enables the user to program, upload/download parameter sets, troubleshoot with built-in oscilloscope function, and control their AC vector drive.

Send Quote Requests to info@automatedpt.com
Call +1(800)985-6929 To Order or Order Online At Nordgearmotors.com

Send Quote Requests to info@automatedpt.com Call +1(800)985-6929 To Order or Order Online At Nordgearmotors.com

AC Vector Drive SK 200E General Specifications

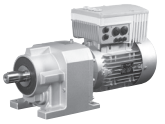

NORD DRIVESYSTEMS

SK 200E General Specifications

	Inverter type SK 2xxE...	Input voltage	Output voltage	Nominal motor power 230V [kW]	Nominal motor power 230V [hp]	Nominal output current rms [A]	Typical input current rms [A]
1 ~ 100 ... 120V	-250-112-O	1 ~ 100...120V -/+10% 47...63Hz	3 AC 0–200...240V	0.25	$\frac{1}{3}$	1.7	8.9
	-370-112-O			0.37	$\frac{1}{2}$	2.2	11
	-550-112-O			0.55	$\frac{3}{4}$	3.0	13.1
	-750-112-O			0.75	1	4.0	20

	Inverter type SK 2xxE...	Input voltage	Output voltage	Nominal motor power 230 V [kW]	Nominal motor power 230 V [hp]	Nominal output current rms [A]	Typical input current rms [A]
1 ~ 200 ... 240V	-250-123-A	1 ~ 200...240V -/+10% 47...63Hz	3 AC 0–200...240V	0.25	$\frac{1}{3}$	1.7	3.9
	-370-123-A			0.37	$\frac{1}{2}$	2.2	5.8
	-550-123-A			0.55	$\frac{3}{4}$	3.0	7.3
	-750-123-A			0.75	1	4.0	10.2
	-111-123-A			1.1	$1\frac{1}{2}$	5.5	14.7

Send Quote Requests to info@automatedpt.com
Call +1(800)985-6929 To Order or Order Online At Nordgearmotors.com

Send Quote Requests to info@automatedpt.com Call +1(800)985-6929 To Order or Order Online At Nordgearmotors.com

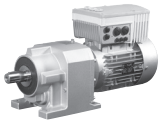

AC Vector Drive SK 200E General Specifications

SK 200E General Specifications

	Inverter type SK 2xxE...	Input voltage	Nominal motor power 230V [kW]	Nominal motor power 230V [hp]	Nominal output current rms [A]	Typical input current rms [A]
3 ~ 200 ... 240V	-250-323-A	3 ~ 200...240V -/+10% 47...63Hz	0.25	$\frac{1}{3}$	1.7	1.4
	-370-323-A		0.37	$\frac{1}{2}$	2.2	1.9
	-550-323-A		0.55	$\frac{3}{4}$	3.0	2.6
	-750-323-A		0.75	1	4.0	3.5
	-111-323-A		1.1	$1\frac{1}{2}$	5.5	5.1
	-151-323-A		1.5	2	7.0	6.6
	-221-323-A		2.2	3	9.5	9.1
	-301-323-A		3	4	12.5	11.8
	-401-323-A		4	5	16	15.1

	Inverter type SK 2xxE...	Input voltage	Nominal motor power 400V [kW]	Nominal motor power 460V [hp]	Nominal output current rms [A]	Typical input current rms [A]
3 ~ 380 ... 500V	-550-340-A	3 ~ 380...500V -20%/+10% 47...63Hz	0.55	$\frac{3}{4}$	1.7	1.6
	-750-340-A		0.75	1	2.3	2.2
	-111-340-A		1.1	$1\frac{1}{2}$	3.1	2.9
	-151-340-A		1.5	2	4.0	3.7
	-221-340-A		2.2	3	5.5	5.7
	-301-340-A		3.0	4	7.5	7.0
	-401-340-A		4.0	5	9.5	8.3
	-551-340-A		5.5	$7\frac{1}{2}$	12.5	11.7
	-751-340-A		7.5	10	16	15.0

Send Quote Requests to info@automatedpt.com
Call +1(800)985-6929 To Order or Order Online At Nordgearmotors.com

SK 200E AC Vector Drive Dimensions

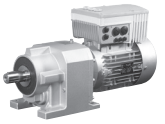

Motor Dimensions with SK 200E Motor Mounted AC Vector Drive

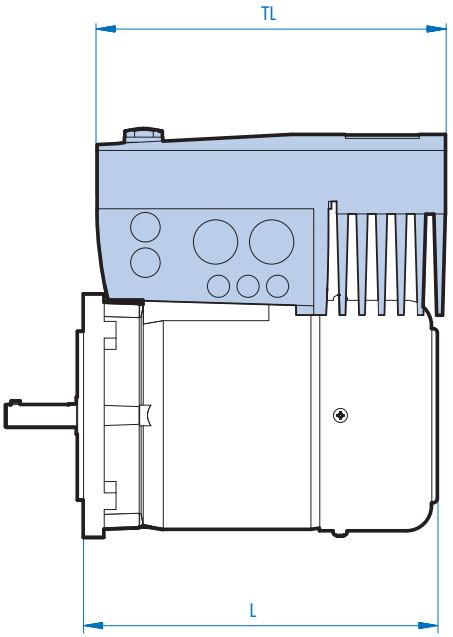

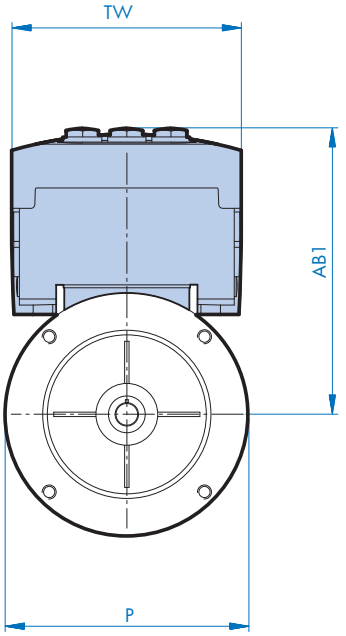

AC VECTOR DRIVES

AC Vector Drive Size	Motor	Width		Length			Weight
		P [in]	TW [in]	L [in]	TL [in]	AB1 [in]	[lbs]
Size 1	71S/L	5.71	6.14	8.43	9.29	7.91	6.61
	80S/L	6.50		9.29		7.68	
	90S/L	7.20		10.87		7.87	
	100L/LA	7.91		12.05		8.23	
Size 2	80S/L	6.50	6.93	9.29	10.47	7.95	9.04
	90S/L	7.20		10.87		8.15	
	100L/LA	7.91		12.05		8.58	
	112M	8.98		12.83		8.98	
Size 3	100L/LA	7.91	8.58	12.05	12.99	9.88	15.21
	112M	8.98		12.83		10.28	
	132S/M	10.47		16.18		10.31	

Send Quote Requests to info@automatedpt.com
Call +1(800)985-6929 To Order or Order Online At Nordgearmotors.com

Send Quote Requests to info@automatedpt.com Call +1(800)985-6929 To Order or Order Online At Nordgearmotors.com

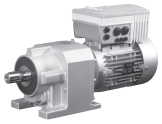

AC Vector Drive SK 200E General Specifications

SK 200E General Specifications

Function	Specification
Power / Voltage	• 1~100...120V -/+10% 0.33 - 1 hp (0.25-0.75 kW) • 1~100...240V -/+10% 0.33 - 1 hp (0.25 - 0.75 kW) • 1~200...240V -/+10% 0.33 - 1.5 hp (0.25 - 1.1 kW) • 3~200...240V -/+10% 0.33 - 15 hp (0.25 - 11 kW) • 3~380...500V -20% +10% 0.75 - 30 hp (0.55 - 22 kW)
Input frequency rating tolerance	47 … 63 Hz
Output frequency	0.0 ... 400.0 Hz
Pulse frequency	3.0 ...16.0kHz, standard setting = 6kHz Power reduction > 8kHz for 115/230V device, > 6kHz for 400V device
Rated overload capacity	150% for 60s, 200% for 3.5s
Protective measures against	• Overheating of the frequency inverter • Short circuit, earthing fault • Over/under-voltage • Over/underload, idling
Motor Turndown	• V/f Const Torque 10:1 • Closed Loop Vector 1000:1 • Sensorless Vector 30:1
Motor temperature Monitoring	Temperature sensor (PTC), temperature monitor (bimetal), I^2t- motor
Digital input	4x, low 0-5V, high 14-30, R_i = 9.5kΩ, C_i = 10nF, cycle time =4mc
Electrical isolation	Control terminals
Control Methods	• V/f Constant torque • Sensorless Vector (ISD) • Energy saving mode • Closed-Loop Vector
Control outputs	Digital output: 18-30V DC (according to VI 24V), maximum 200mA, maximum 100kΩ load Brake rectifier: maximum 0.5A choke voltage, voltage according to mains
Interfaces	Standard: RS 485 (USS), RS 232 (single slave), System Bus Optional: Profibus, CANopen, DeviceNet, AS Interface
Energy Efficiency of AC drive	Approximately 95% according to size
Ambient temperature	-25 ...+40°C (S1- 100% ED), -25 ... +50°C(S3 - 75% ED 15min)
Storage & transport temp.	-25 ...+60 / 70°C
Long term storage	• Connect the FI & the 24V modules to the mains voltage for 60 min. before 1 storage year • Connect the FI & the 24V modules to the 24V control for 60 min. before 1 storage year • Maintain this cycle throughout the storage period
Protection class	IP55, optional IP66
Maximum mounting altitude above sea level	• Up to 1000m – No power reduction • 1000 - 4000m – 1% per 100m power reduction (up to 2000m overvoltage cat.3) • 2000 - 4000m – Overvoltage cat. 2 is maintained, external overvoltage protection at the mains input is necessary
Waiting period between power-up cycles	60 seconds for all devices in a normal operating cycle
Accel / Decel Time	0.0 … 320.0s
Connection terminals	• Mains or motor / brake resistance - 4mm² with wiring sleeves, 6mm² with rigid cable • Control unit / system bus - 2.5mm² with 1.5mm² wiring sleeves • RS485 / RS232 - 1xRJ12 (6-pin)
Connection terminal screw tightening torque	1.2 - 10.5 Nm
External 24V supply voltage	18...30V DC, at least 200-800mA according to load

Send Quote Requests to info@automatedpt.com
Call +1(800)985-6929 To Order or Order Online At Nordgearmotors.com

AC Vector Drives
SK 500E

NORDAC SK 500E AC Vector Drives

NORD has now expanded it centralized control family by adding increased functionality with new versions of the SK 500E AC vector drive line. This series is designed to be mounted in a control panel to seamlessly integrate with the centralized controls.

With the SK 500E series of AC vector drives, NORD offers intelligent and cost effective drive solutions with scalable equipment options, which are all fully compatible with regard to motor performance range, supply voltage and sizes. The basis for all models is a well-equipped basic unit with expansion possibilities through optional modules. SK 500E AC vector drives are suitable for all application areas and can be easily adapted to specific requirements with plug-in technology units.

Features of the SK 500E include, but not limited to:

- Sensorless & closed loop vector control modes for superior speed regulation
- Positioning control capabilities
- Incremental and absolute encoder inputs
- "Safe Stop" as per EN 954-1, max. Cat. 4
- Dynamic braking control for regenerative loads
- Various potentiometer and field bus modules for AC vector drive control

SK 500E AC Vector Drive Ratings

- 1~115V 0.33 - 1 hp (0.25 - 0.75kW)
- 1~240V 0.33 - 3 hp (0.25 - 2.2 kW)
- 3~240V 0.33 - 25 hp (0.25 - 18.5 kW)
- 3~480V 0.75 - 125 hp (0.55 - 90 kW)

Selection Steps

1. SK 500E Inverter Selection:
Choose the SK 500E AC vector drive based on motor power rating, input voltage supply, and drive features. Use the SK 500E Rating & Voltage Matrix to ensure the desired Series is available in the selected kW Rating and Input Voltage ratings.

2. Interface Module (Tech. Unit) Selection (if required)**:**
Choose specific technology unit such as speed POT with start/stop, fieldbus interface, or programming and display module.

3. Dynamic Braking Resistor Selection (if required)**:**
Choose a specific braking resistor based on the AC vector drive's voltage and power rating

4. Programmer/Operator Selection (recommended)**:**
Choose a specific type of programming/operation device based on specified needs. (if required)

Send Quote Requests to info@automatedpt.com
Call +1(800)985-6929 To Order or Order Online At Nordgearmotors.com

NORD DRIVESYSTEMS

AC Vector Drives SK 500E

NORDAC SK 500E AC Vector Drives

The range of options and performance allows users to select a device with the exact features that are required for the application, thus ensuring an extremely efficient use of resources. All SK 500E versions have the same appearance, enabling uniform operation and handling. All devices and optional technology units such as field bus or I/O systems can be linked via an integrated system bus to make integration much simpler.

		SK 500E	SK 505E	SK 510E	SK 511E	SK 515E	SK 520E	SK 530E	SK 535E	SK 540E	SK 545E
Power	Power range 0.33 kW - 10 kW	☑	☑	☑	☑		☑	☑	☑	☑	☑
	Power range 15kW - 125kW					☑			☑		☑
Basic functions	Same design	☑	☑	☑	☑	☑	☑	☑	☑	☑	☑
	Coldplate up to Size 4, external heat sink technology up to Size 2	☑	☑	☑	☑		☑	☑	☑	☑	☑
Basic functions	Sensorless current vector control (ISD control)	☑	☑	☑	☑	☑	☑	☑	☑	☑	☑
	Line filter Class C2	☑	☑	☑	☑	☑	☑	☑	☑	☑	☑
	Brake management, mech. motor brake	☑	☑	☑	☑	☑	☑	☑	☑	☑	☑
	Brake chopper (brake resistor optional)	☑	☑	☑	☑	☑	☑	☑	☑	☑	☑
	Switchable parameter sets	☑	☑	☑	☑	☑	☑	☑	☑	☑	☑
	All normal drive functions	☑	☑	☑	☑	☑	☑	☑	☑	☑	☑
	Process controller / PID controller	☑	☑	☑	☑	☑	☑	☑	☑	☑	☑
	Consistent parameter structure	☑	☑	☑	☑	☑	☑	☑	☑	☑	☑
	All common bus systems via Tech. Units	☑	☑	☑	☑	☑	☑	☑	☑	☑	☑
	Automatic flux optimisation (energy saving function)	☑	☑	☑	☑	☑	☑	☑	☑	☑	☑
Special options	"Safe stop" function			☑	☑	☑		☑	☑	☑	☑
	CANopen on Board				☑	☑ (Size 5-7)	☑	☑	☑	☑	☑
	Incremental encoder input						☑	☑	☑	☑	☑
	Additional control inputs and outputs						☑	☑	☑	☑	☑
	POSICON (positioning control)							☑	☑	☑	☑
	24V power supply for control board (mandatory up to 10kW, optional above 15kW)		☑			☑			☑		☑
	PLC logic function									☑	☑
	Universal encoder interface									☑	☑
	Synchronous motor operation									☑	☑

Send Quote Requests to info@automatedpt.com
Call +1(800)985-6929 To Order or Order Online At Nordgearmotors.com

AC Vector Drives
SK 500E

DRIVESYSTEMS

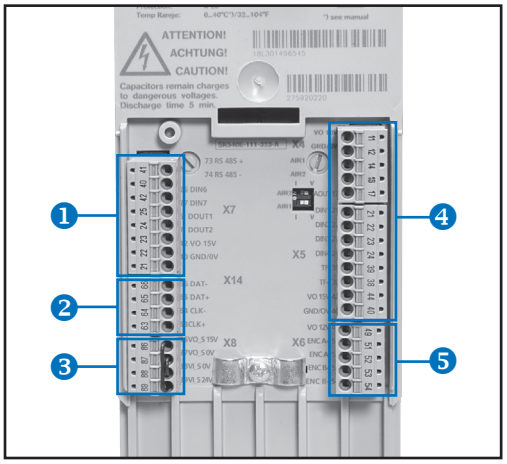

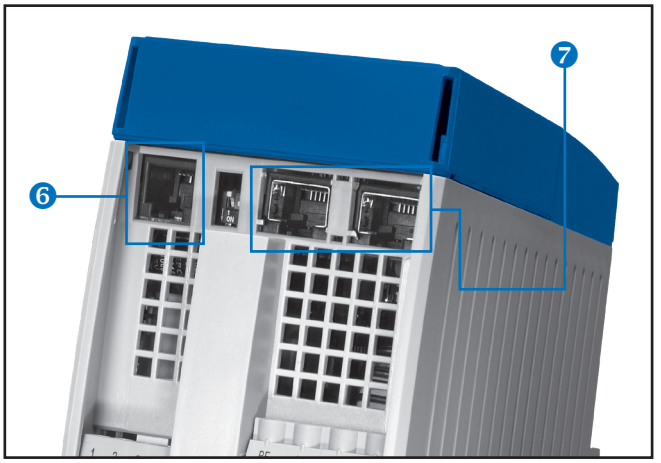

Interfaces	SK 500E	SK 505E	SK 510E	SK 511E	SK 515E	SK 520E	SK 530E	SK 535E	SK 540E	SK 545E
4 5x digital inputs 2x analog inputs (0...10V, 0/4...20mA) 1x analog output 2x multi-function relays RS 485 and RS 232 on RJ 12 socket	☑	☑	☑	☑	☑*	☑	☑	☑*	☑ up to Size 4: One DIN implemented as potential-isolated thermistor input	☑* up to Size 4: One DIN implemented as potential-isolated thermistor input
5 1x Incremental encoder input						☑	☑	☑	☑	☑
1 Additionally 2x digital inputs 2x digital outputs 1x RS 485 to terminal						☑	☑	☑	☑ One DIN can be parameterised as DOUT & one DOUT as DIN	☑ One DIN can be parameterised as DOUT & one DOUT as DIN
Additional potential-isolated thermistor input					☑ (above Size 5)			☑ (above Size 5)		☑ (above Size 5)
External 24V supply for the control board		☑			☑			☑		☑
3 Safety Function "Safe Stop"			☑	☑	☑		☑	☑	☑	☑
7 2x RJ 45 for CANopen In/Out				☑	☑ (above Size 5)	☑	☑	☑	☑	☑
6 1x RJ 12 for operation and diagnosis	☑	☑	☑	☑	☑	☑	☑	☑	☑	☑
2 Universal encoder interface									☑	☑

* From Size 5 and above the analog inputs can also be used for +/- 10V signals

Send Quote Requests to info@automatedpt.com
Call +1(800)985-6929 To Order or Order Online At Nordgearmotors.com

NORD DRIVESYSTEMS

AC Vector Drives
SK 500E

SK 500E Rating and Voltage Matrix

kW (hp)	SK 500E				SK 505E				SK 510E				SK 511E				SK 515E			
	120V 1-ϕ	230V 1-ϕ	230V 3-ϕ	460V 3-ϕ	120V 1-ϕ	230V 1-ϕ	230V 3-ϕ	460V 3-ϕ	120V 1-ϕ	230V 1-ϕ	230V 3-ϕ	460V 3-ϕ	120V 1-ϕ	230V 1-ϕ	230V 3-ϕ	460V 3-ϕ	120V 1-ϕ	230V 1-ϕ	230V 3-ϕ	460V 3-ϕ
0.25 (0.33)	♦	♦	♦			✹	✹			♦	♦			♦	♦					
0.37 (0.50)	♦	♦	♦			✹	✹			♦	♦			♦	♦					
0.55 (0.75)	♦	♦	♦	♦		✹	✹	✹		♦	♦	♦		♦	♦	♦				
0.75 (1.0)	♦	♦	♦	♦		✹	✹	✹		♦	♦	♦		♦	♦	♦				
1.1 (1.5)		♦	♦	♦		✹	✹	✹		♦	♦	♦		♦	♦	♦				
1.5 (2.0)		♦	♦	♦		✹	✹	✹		♦	♦	♦		♦	♦	♦				
2.2 (3.0)		♦	♦	♦		✹	✹	✹		♦	♦	♦		♦	♦	♦				
3.0 (4.0)			♦	♦			✹	✹			♦	♦			♦	♦				
4.0 (5.0)			♦	♦			✹	✹			♦	♦			♦	♦				
5.5 (7.5)				♦				✹				♦				♦			✪	
7.5 (10.0)				♦				✹				♦				♦			✪	

♦ 24VDC control voltage supply internal ✹ 24VDC control voltage required from external source ✪ 24VDC control voltage supply internal or external

kW (hp)	SK 520E				SK 530E				SK 535E				SK 540E				SK 545E			
	120V 1-ϕ	230V 1-ϕ	230V 3-ϕ	460V 3-ϕ	120V 1-ϕ	230V 1-ϕ	230V 3-ϕ	460V 3-ϕ	120V 1-ϕ	230V 1-ϕ	230V 3-ϕ	460V 3-ϕ	120V 1-ϕ	230V 1-ϕ	230V 3-ϕ	460V 3-ϕ	120V 1-ϕ	230V 1-ϕ	230V 3-ϕ	460V 3-ϕ
0.25 (0.33)	♦	♦	♦		♦	♦	♦			✹	✹		♦	♦	♦			✹	✹	
0.37 (0.50)	♦	♦	♦		♦	♦	♦			✹	✹		♦	♦	♦			✹	✹	
0.55 (0.75)	♦	♦	♦	♦	♦	♦	♦	♦		✹	✹	✹	♦	♦	♦	♦		✹	✹	✹
0.75 (1.0)	♦	♦	♦	♦	♦	♦	♦	♦		✹	✹	✹	♦	♦	♦	♦		✹	✹	✹
1.1 (1.5)		♦	♦	♦		♦	♦	♦		✹	✹	✹		♦	♦	♦		✹	✹	✹
1.5 (2.0)		♦	♦	♦		♦	♦	♦		✹	✹	✹		♦	♦	♦		✹	✹	✹
2.2 (3.0)		♦	♦	♦		♦	♦	♦		✹	✹	✹		♦	♦	♦		✹	✹	✹
3.0 (4.0)			♦	♦			♦	♦			✹	✹			♦	♦			✹	✹
4.0 (5.0)			♦	♦			♦	♦			✹	✹			♦	♦			✹	✹
5.5 (7.5)				♦				♦			✪	✹				♦			✪	✹
7.5 (10.0)				♦				♦			✪	✹				♦			✪	✹

♦ 24VDC control voltage supply internal ✹ 24VDC control voltage required from external source ✪ 24VDC control voltage supply internal or external

AC VECTOR DRIVES

Send Quote Requests to info@automatedpt.com
Call +1(800)985-6929 To Order or Order Online At Nordgearmotors.com

AC Vector Drives
SK 500E

NORD DRIVESYSTEMS

Step 1: SK 500E Inverter Selection

	Series		kW Rating		Input Voltage
SK	❸*	E	❶*	-	❷*

❶* kW Rating
250 - 0.25 kW (0.33 hp)
370 - 0.37 kW (0.50 hp)
550 - 0.55 kW (0.75 hp)
750 - 0.75 kW (1.00 hp)
111 - 1.10 kW (1.50 hp)
151 - 1.50 kW (2.00 hp)
221 - 2.20 kW (3.00 hp)
301- 3.00 kW (4.00 hp)
401 - 4.00 kW (5.00 hp)
551 - 5.50 kW (7.50 hp)
751 - 7.50 kW (10.00 hp)
112 - 11.0 kW (15 hp)
152 - 15.0 kW (20 hp)
182 - 18.5 kW (25 hp)
222 - 22.0 kW (30 hp)
302 - 30.0 kW (40 hp)
372 - 37.0 kW (50 hp)
452 - 45.0 kW (60 hp)
552 - 55.0 kW (75 hp)
752 - 75.0 kW (100 hp)
902 - 90.0 kW (125 hp)

❷* Input Voltage
112-O - 100-120V, 1-phase (0.25 - 0.75 kW) (0.33 - 1.00 hp)
323-A - 200-240V, 1-phase (0.25 - 2.20 kW) (0.33 - 3.00 hp)
323-A - 200-240V, 3-phase (0.25 - 18.5 kW) (0.33 - 25.0 hp)
340-A - 380-480V, 3-phase (0.55 - 90.0 kW) (0.75 - 125.0 hp)

❸* Series
500 - Basic Unit
505 - Basic Unit + 24V Operation®
510 - Basic Unit + Safe Stop
511 - Basic Unit + Safe Stop + CANopen
515 - Basic Unit + 24V Operation® + Safe Stop + CANopen
520 - Basic Unit + CANopen + Encoder + Extra I/O
530 - Basic Unit + Safe Stop + CANopen + Encoder Input + Extra I/O + POSICON
535 - Basic Unit + Safe Stop + CANopen + Encoder Input + Extra I/O + POSICON + 24V Operation®
540 - Basic Unit + Safe Stop + CANopen + Encoder Input + Extra I/O + POSICON + Integrated PLC functionality + Universal Encoder Interface
545 - Basic Unit + Safe Stop + CANopen + Encoder Input + Extra I/O + POSICON + Integrated PLC functionality + Universal Encoder Interface + 24V Operation®

*** Please Refer to the Rating and Voltage Matrix on page 321 to ensure the desired Series is available in the selected KW and Input Voltage Ratings that you have selected.**

® External 24V supply required on select ratings. Refer to the Rating and Voltage Matrix on page 321 for more detail.

AC VECTOR DRIVES

Send Quote Requests to info@automatedpt.com
Call +1(800)985-6929 To Order or Order Online At Nordgearmotors.com

NORD DRIVESYSTEMS

AC Vector Drives SK 500E

Step 2: Interface Module (Tech. Unit) Selection

SK TU3 - ❶ (Module Type)

Module Type (Internal/External)
CTR - Control box programmer & display
PAR - Parameter box programmer & English display
POT - Speed potentiometer with star/stop and reverse direction
PBR - Profibus interface
PBR-24V - Profibus interface requiring external 24VDC supply
IBS - Interbus interface
CAO - CANopen interface
DEV - DeviceNet interface
AS1 - AS interface
ECT - Ethercat interface
PNT - Profinet interface
EIP - Ethernet/IP Interface
POL - Powerlink Interface

Technology Units

Each SK 500E is equipped with a modular slot with re-movable cover. Here, a technology unit specific for the application can be added to program or control the unit, or to access the field bus system.

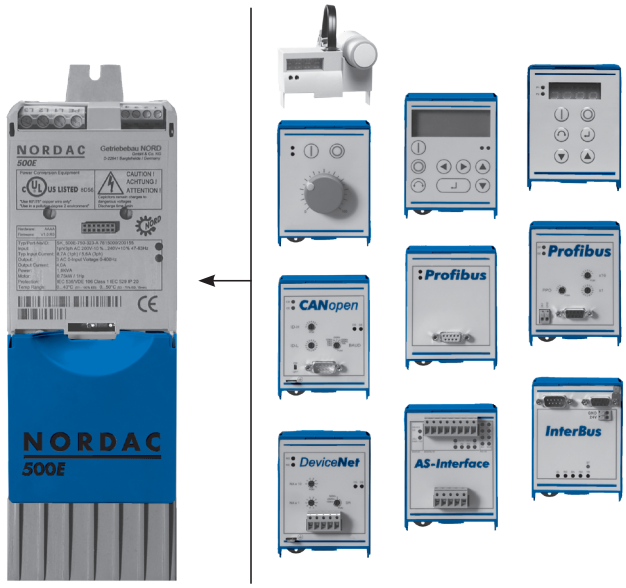

Step 3: Dynamic Braking Resistor Selection

SK BR4 - ❶ (Model Type) ❷ (R. Ohms) / ❸ (C. Rating)

❶ Model Type	Input Voltage	Drive Rating	❷ Resistance Ohms	❸ Continuous Rating
4: Footprint (SK 500E) (SK 505E) (SK 510E) (SK 511E) (SK 520E) (SK 530E) (SK 540E)	115/ 230V	0.25 - 0.37 kW	**240**	**100**
		0.55 - 0.75 kW	**150**	**100**
		1.1 - 2.2 kW	**75**	**200**
		3.0 - 4.0 kW	**35**	**400**
	460V	0.55 - 0.75 kW	**400**	**100**
		1.1 - 2.2 kW	**210**	**200**
		3.0 - 4.0 kW	**100**	**400**
		5.5 - 7.5 kW	**60**	**600**
2: Chassis (SK 515E) (SK 535E) (SK 545E)	230V	3.0 - 4.0 kW	**35**	**400**
		5.5 - 7.5 kW	**22**	**600**
		11.0 kW	**12**	**1500**
		15.0 - 18.5 kW	**9**	**2200**
	460V	3.0 - 4.0 kW	**100**	**400**
		5.5 - 7.5 kW	**60**	**600**
		11.0 - 15.0 kW	**30**	**1500**
		18.5 - 22.0 kW	**22**	**2200**
		30.0 - 37.0 kW	**12**	**4000**
		45.0 - 55.0 kW	**8**	**6000**
		75.0 - 90.0 kW	**6**	**7500**

Dynamic Braking Resistors

The SK 500E has options for bottom-mounted (foot-print type) and external-mounted (chassis-type) dynamic braking resistors (DBR). A DBR is used for applications with regenerative loads such as lifting, cyclical, and high inertia loads. The DBR will dissipate the regenerative energy from the motor as heat using the internal brake chopper that is provided with the SK 500E.

Only the bottom-mounted dynamic braking resistors are shown in this selection guide. If a DBR for an AC vector drive that was selected is not shown in this guide, refer to the SK 500E operation manual BU 0500 GB for additional information.

The bottom-mounted DBRs are for general braking purposes. Larger DBRs may be required depending on the application parameters. Contact NORD for assistance with selecting the appropriate DBR.

Send Quote Requests to info@automatedpt.com
Call +1(800)985-6929 To Order or Order Online At Nordgearmotors.com

Send Quote Requests to info@automatedpt.com
Call +1(800)985-6929 To Order or Order Online At Nordgearmotors.com

AC Vector Drives
SK 500E

Step 4: Programmer/Operation Selection
(recommended)

Programmer/Operation Selection
SK CSX-3HS - Handheld Simple Box (LED Display)
SK PAR-3H - Handheld Parameter Box (LCD English Display)
SK CSX-3E - Panel Mount Simple Box (LED Display)
SK PAR-3E - Panel Mount Parameter Box (LCD English Display)
RJ12-SUB/D - PC cable for NORDCON software
SK CSX-0 - Simple programmer and display mounted on top of SK 500E

A variety of programming and operation interfaces are available for the SK 500E. The SK PAR-3H (handheld) and SK PAR-3E (panel mount) provide programming, troubleshooting, and operation controls with an easy to use LCD English display. These modules have the capability of storing up to 5 different parameter sets for simple transfer of settings to other units.

SK PAR-3H

SK PAR-3E

The SK CSX-3H (handheld) and SK CSX-3E (panel mount) is used in a similar fashion as the SK PAR-3H and SK PAR-3E, but implements a bright, 4-digit 7-segment LED display.

SK CSX-3H

SK CSX-3E

With the use of Nord's RJ12-SUB/D cable, users may connect a SK 500E to a PC and configure it with NORDCON software. NORDCON is a Windows-based program that enables the user to program, upload/download parameter sets, troubleshoot with built in oscilloscope function, and control their AC vector drive.

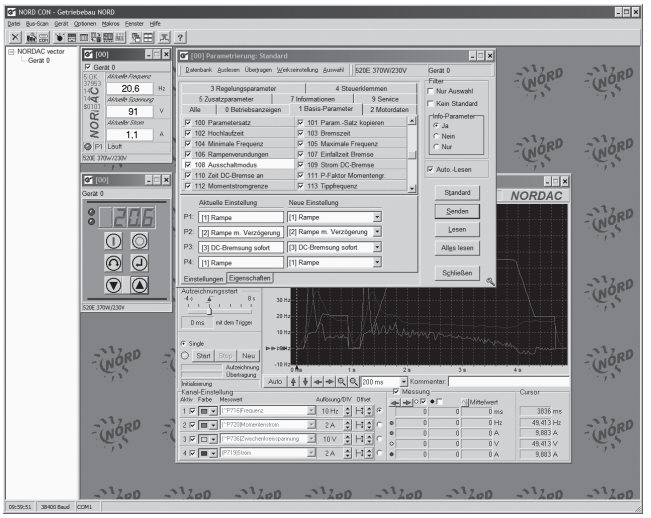

The CSX-0 is a simple programming and control tool that is installed on the top of the SK 500E and provides access to the drive settings and can be used as a local speed controller. An example of when this device may be used is when a field bus technology unit is already installed and the user would like a programming tool with speed readout also installed on the AC vector drive.

AC VECTOR DRIVES

Send Quote Requests to info@automatedpt.com
Call +1(800)985-6929 To Order or Order Online At Nordgearmotors.com

NORD DRIVESYSTEMS

AC Vector Drives SK 500E

SK 500E General Specifications

	Inverter type SK 5xxE...	Mains voltage	Output voltage	Nominal motor output 230 V [kW]	Nominal motor output 240 V [hp]	Nominal output current rms[A]	Typical input current rms[A]	Dim. L x B x D [mm]
1 ~ 110 ... 120V	-250-112-O	1 ~ 110...120V -/+10%. 47...63Hz	3 AC 0-220...240V	0.25	1/3	1.7	8	size1: 186 x 74 x 153
	-370-112-O			0.37	1/2	2.2	10	
	-550-112-O			0.55	3/4	3.0	13	
	750-112-O			0.75	1	4.0	18	

	Inverter type SK 5xxE...	Mains voltage	Nominal motor output 400 V [kW]	Nominal motor output 480 V [hp]	Nominal output current rms[A]	Typical input current rms[A]	Dimensions L x B x D [mm]
1/3 ~ 200 ... 240V	-250-323-A	1/3 ~ 200...240V -/+10%. 47...63Hz	0.25	1/3	1.7	3.7 / 2.4	size1: 186 x 74 x 153
	-370-323-A		0.37	1/2	2.2	4.8 / 3.1	
	-550-323-A		0.55	3/4	3.0	6.5 / 4.2	
	-750-323-A		0.75	1	4.0	8.7 / 5.6	
	-111-323-A		1.1	1 1/2	5.5	12.0 / 7.7	size2: 226 x 74 x 153
	-151-323-A		1.5	2	7.0	15.2 / 9.8	
	-221-323-A		2.2	3	9.0	19.6 / 13.3	

Send Quote Requests to info@automatedpt.com
Call +1(800)985-6929 To Order or Order Online At Nordgearmotors.com

AC Vector Drives
SK 500E

NORD DRIVESYSTEMS

SK 500E General Specifications

	Inverter type SK 5xxE...	Mains voltage	Nominal motor output 400 V [kW]	Nominal motor output 480 V [hp]	Nominal output current rms[A]	Typical input current rms[A]	Dimensions L x B x D [mm]
3 ~ 200 ... 240V	-301-323-A	3 ~ 200...240V. -/+10%. 47...63Hz	3.0	4	12.5	17.5	size3: 241 x 98 x 178
	-401-323-A		4.0	5	16.0	22.4	

	Inverter type SK 5xxE...	Mains voltage	Nominal motor output 400 V [kW]	Nominal motor output 480 V [hp]	Nominal output current rms[A]	Typical input current rms[A]	Dimensions L x B x D [mm]
3 ~ 380 ... 480V	-550-340-A	3 ~ 380...480V -20%/+10%. 47...63Hz	0.55	$\frac{3}{4}$	1.7	2.4	Size 1: 186 x 74 x 153
	-750-340-A		0.75	1	2.3	3.2	
	-111-340-A		1.1	$1\frac{1}{2}$	3.1	4.3	Size 2: 226 x 74 x 153
	-151-340-A		1.5	2	4.0	5.6	
	-221-340-A		2.2	3	5.5	7.7	
	-301-340-A		3.0	4	7.5	10.5	Size 3: 241 x 98 x 174
	-401-340-A		4.0	5	9.5	13.3	
	-551-340-A		5.5	$7\frac{1}{2}$	12.5	17.5	Size 4: 286 x 98 x 174
	-751-340-A		7.5	10	16	22.4	

Send Quote Requests to info@automatedpt.com
Call +1(800)985-6929 To Order or Order Online At Nordgearmotors.com

Send Quote Requests to info@automatedpt.com Call +1(800)985-6929 To Order or Order Online At Nordgearmotors.com

SK 500E General Specifications

Function	Specification
Power / Voltage	• 1~110-120V +/-10% 0.33 - 1.0 hp (0.25 - 1.1 kW) • 1~200-240V +/-10% 0.33 - 3.0 hp (0.25 - 2.2 kW) • 3~200-240V +/-10% 0.33 - 25 hp (0.25 - 18.5 kW) • 3~380-480V +/-10% 0.75 - 125 hp (0.55 - 90.0 kW)
Input frequency rating tolerance	47 - 63Hz
Output frequency	0 - 400Hz
Pulse frequency	3.0 - 16.0kHz, standard setting = 6kHz Power reduction > 8kHz for 115/230V device, > 6kHz for 400V device
Rated overload capacity	150% for 60 seconds, 200% for 5 seconds
Protective measures against	• Overheating of the frequency inverter • Short circuit, earthing fault • Over/under-voltage • Over/underload, idling
Motor Turndown	• V/f Constant Torque 10:1 • Closed Loop Vector 1000:1 • Sensorless Vector 30:1
Motor temperature Monitoring	Temperature sensor (PTC), temperature monitor (bimetal), I^2t- motor
Digital input	5x, 7.5 - 30V (500E), 7x, 7.5 - 35V (520-530E)
Control Methods	• V/f Constant torque • Sensorless Vector (ISD) • Energy saving mode • Closed-Loop Vector
Control outputs	2x Digital output: 15V, 200mA maximum, 100kΩ load (520-530E) 2x Relay output: 230 VAC/24VDC, 24 Amp maximum
Interfaces	Standard: RS 485 (USS), RS 232 (single slave), System Bus Optional: Profibus, CANopen, DeviceNet, AS Interface, Interbus
Energy Efficiency of AC drive	Approximately 95% according to size
Ambient temperature	0 - 40°C (S1 - 100% ED), 0 - 50°C (S3 - 70% ED)
Storage & transport temp.	-25 - 60 / 70°C
Long term storage	• Connect the FI & the 24V modules to the mains voltage for 60 min. before 1 storage year • Maintain this cycle throughout the storage period
Protection class	IP20
Maximum mounting altitude above sea level	• Up to 1000m – No power reduction • 1000 - 4000m – 1% per 100m power reduction (up to 2000m overvoltage cat.3) • 2000 - 4000m – Overvoltage cat. 2 is maintained, external overvoltage protection at the mains input is necessary
Waiting period between power-up cycles	60 seconds for all devices in a normal operating cycle
Accel / Decel Time	0.0 - 320.0s
Connection terminals	• Mains or motor / brake resistance - 25mm² with wiring sleeves, 35mm² with rigid cable • Control unit / system bus - 1.0mm² with wiring sleeves • Relay 1/2 - 1.5mm² with wiring sleeves (S1-4), 4.0 mm² with wiring sleeves (S5-7) • RS485 / RS232 - 1xRJ12 (6-pin) • CANbus/CANopen - 2x RJ45 (8-pin) (except SK 50xE and 510E)
Connection terminal screw tightening torque	0.5 - 0.6 Nm
External 24V supply voltage	18...30V DC, at least 800-1000mA according to load (SK5x5E only)

Send Quote Requests to info@automatedpt.com
Call +1(800)985-6929 To Order or Order Online At Nordgearmotors.com

Send Quote Requests to info@automatedpt.com
Call +1(800)985-6929 To Order or Order Online At Nordgearmotors.com

AC Vector Drives
SK 500E

SK 500E AC Vector Drive Dimensions

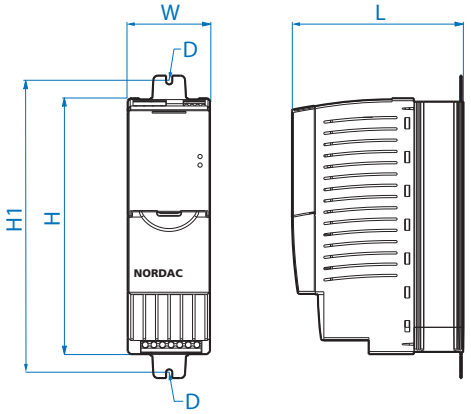

Case Sizes 1 - 4

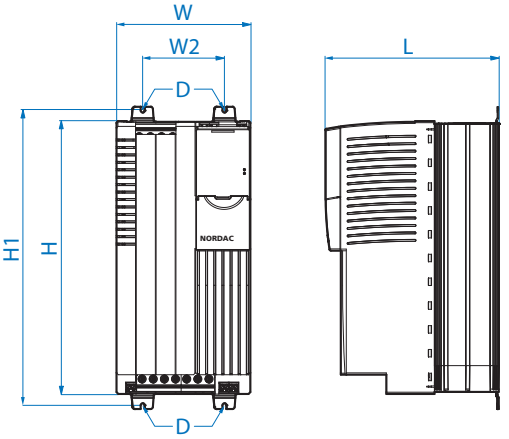

Case Sizes 5 - 6

AC VECTOR DRIVES

Case Size	H	H1	L	W	W2	D	Weight
Case Size 1	7.32 [186 mm]	8.66 [220 mm]	6.02 [153 mm]	2.91 [74 mm]	-	ø0.216 [5.5 mm]	3.1 lb [1.4 kg]
Case Size 2	8.90 [226 mm]	10.24 [260 mm]	6.02 [153 mm]	2.91 [74 mm]	-	ø0.216 [5.5 mm]	4.0 lb [1.8 kg]
Case Size 3	9.49 [241 mm]	10.83 [275 mm]	7.13 [181 mm]	3.86 [98 mm]	-	ø0.216 [5.5 mm]	6.0 lb [2.7 kg]
Case Size 4	11.26 [286 mm]	12.60 [320 mm]	7.13 [181 mm]	3.86 [98 mm]	-	ø0.216 [5.5 mm]	6.8 lb [3.1 kg]
Case Size 5	12.76 [324 mm]	14.09 [358 mm]	8.82 [224 mm]	6.18 [157 mm]	3.66 [93 mm]	ø0.216 [5.5 mm]	17.6 lb [8.0 kg]

Send Quote Requests to info@automatedpt.com
Call +1(800)985-6929 To Order or Order Online At Nordgearmotors.com

Send Quote Requests to info@automatedpt.com
Call +1(800)985-6929 To Order or Order Online At Nordgearmotors.com

Engineering

- Tolerances
- Conversion Tables
- Service Factors
- AGMA Information
- Unit Weights

NORD® DRIVESYSTEMS

www.nord.com

Metric ⇒ Inch

Multiply

Gram [g]
Kilogram [kg]
Newton [N]
Newton meter [Nm]
Newton meter [Nm]
Inertia [kgm²]

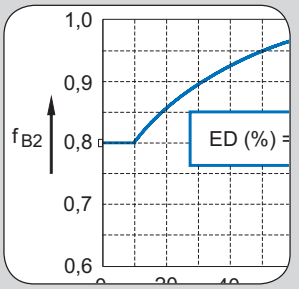

Engineering AGMA Service Factors

Application	
DREDGES	
Cable reels	1.00
Conveyors	1.00
Cutter Head Dives	1.2

Send Quote Requests to info@automatedpt.com
Call +1(800)985-6929 To Order or Order Online At Nordgearmotors.com

General Information

NORD DRIVESYSTEMS

Solid Shaft Diameter Tolerance		[in]
> 0.375	≤ 1.750	+0.0000 / -0.0005
> 1.750	≤ 7.500	+0.0000 / -0.0010

All Keys and Keyways: Inch - ANSI B17

Solid Shaft Diameter Tolerance		[mm]
> 10	≤ 18	+0.012 / +0.001
> 18	≤ 30	+0.015 / +0.002
> 30	≤ 50	+0.018 / +0.002

All Keys and Keyways: Metric - DIN 6885, class m6

Solid Shaft Drill & Tap Shaft End - Threaded Holes		[in]
> ø 0.375	≤ ø 0.500	10-24 x 0.43
> ø 0.500	≤ ø 0.875	1/4-20 x 0.59
> ø 0.875	≤ ø 0.938	5/16-18 x 0.71
> ø 0.938	≤ ø 1.100	3/8-16 x 0.87
> ø 1.100	≤ ø 1.300	1/2-13 x 1.10
> ø 1.300	≤ ø 1.875	5/8-11 x 1.42

Solid Shaft Drill & Tap Shaft End - Threaded Holes		[mm]
> ø 10	≤ ø 13	M4 x 10
> ø 13	≤ ø 16	M5 x 12.5
> ø 16	≤ ø 21	M6 x 16
> ø 21	≤ ø 24	M8 x 19
> ø 24	≤ ø 30	M10 x 22
> ø 30	≤ ø 38	M12 x 28

Flange Pilot (AK or AK1) Tolerance		[in]
Flange Pilot Diameter	Pilot Tolerance	Fit Class ❶
> ø 1.969	≤ ø 3.150	+0.0005 / -0.0003	j6
> ø 3.150	≤ ø 4.724	+0.0005 / -0.0004	j6
> ø 4.724	≤ ø 7.087	+0.0006 / -0.0004	j6

❶ **Inch Pilot Tolerances per ISO286-2**

Flange Pilot (AK or AK1) Tolerance		[mm]
Flange Pilot Diameter	**Pilot Tolerance**	**Fit Class ❶**
> ø 50	≤ ø 80	+0.012 / -0.007	j6
> ø 80	≤ ø 120	+0.013 / -0.009	j6
> ø 120	≤ ø 180	+0.014 / -0.011	j6

❶ **Metric Pilot Tolerances per ISO286-2**

Casting Surfaces may differ slightly (approximately 0.125 inches or 3.2mm) from the specified nominal dimensions as a result of the manufacturing process

ENGINEERING

Send Quote Requests to info@automatedpt.com
Call +1(800)985-6929 To Order or Order Online At Nordgearmotors.com

Send Quote Requests to info@automatedpt.com
Call +1(800)985-6929 To Order or Order Online At Nordgearmotors.com

Metric ⇒ Inch

Multiply	By	To Obtain
Gram [g]	x 0.0353	= oz
Kilogram [kg]	x 2.205	= lb
Newton [N]	x 0.2248	= lb
Newton meter [Nm]	x 8.851	= lb-in
Newton meter [Nm]	x 0.7375	= lb-ft
Inertia [kgm^2]	x 23.75	= lb-ft^2
Kilowatt [kW]	x 1.341	= hp
Meter [m]	x 39.4	= in
Meter [m]	x 3.281	= ft
Meter [m]	x 1.094	= yd
Millimeter [mm]	x 0.0391	= in
Centimeter [cm]	x 0.394	= in
Cubic Centimeter [cm^3]	x 0.061	= in^3
Liter [l]	x 61.023	= in^3
Liter [l]	x 1.057	= qt
Liter [l]	x 0.2642	= gal

Inch ⇒ Metric

Multiply	By	To Obtain
Ounce [oz]	x 28.35	= g
Pound [lb]	x 0.454	= kg
Ounce [oz]	x 0.028	= kg
Pound [lb]	x 4.448	= N
Pound-Inch [lb-in]	x 0.113	= Nm
Pound Feet [lb-ft]	x 1.3558	= Nm
Pound Feet Squared [lb-ft^2]	x 0.0421	= kgm^2
Horsepower [hp]	x 0.746	= kW
Feet [ft]	x 0.3048	= kW
Yard [yd]	x 0.9144	= m
Inch [in]	x 25.4	= mm
Inch [in]	x 2.54	= cm
Inch [in]	x 0.0254	= m
Cubic Inch [in^3]	x 16.39	= cm^3
Cubic Inch [in^3]	x 0.016	= liters
Gallon [gal]	x 3.785	= liters

Temperature

°F = 1.8 °C + 32
°C = 0.5555 x (°F - 32)
°C = °K - 273.16

Linear Velocity

Miles per Hour [mph]	x 88	= ft/min [fpm]
Miles per Hour [mph]	x 1.4677	= ft/sec [fps]
Feet per Minute [fpm]	x 0.3048	= m/min
Feet per Minute [fpm]	x 0.00508	= m/sec
Meter per Minute [m/min]	x 3.2808	= ft/min [fpm]
Meter per Second [m/sec]	x 196.85	= ft/min [fpm]

Power

$$hp = \frac{\text{Torque (lb-in)} \times \text{rpm}}{63025}$$

$$hp = \frac{\text{Torque (lb-ft)} \times \text{rpm}}{5252}$$

$$hp_{(Lift)} = \frac{\text{Wgt (lb)} \times \text{fpm}}{33000 \times \text{Efficiency}}$$

$$hp_{(Slide)} = \frac{\text{Wgt (lb)} \times \mu \times \text{fpm}}{33000 \times \text{Efficiency}}$$

Torque

$$T_{(lb\text{-}in)} = \frac{hp \times 63025}{rpm}$$

$$T_{(lb\text{-}ft)} = \frac{hp \times 5252}{rpm}$$

Linear & Rotational Speed

$$fpm = 0.2618 \times Dia_{(in)} \times rpm$$

$$rpm = \frac{fpm \times 3.820}{Dia_{(in)}}$$

Electric Motor 3-phase

$$hp_{(3ph\text{-}motor)} = \frac{1.732 \times V \times I \times PF \times \text{Efficiency}}{746}$$

Metric M Threads

For metric "M" threads, it is customary to omit the thread pitch for course threads. For example, if a thread is called out as an M8 with no pitch shown, it is automatically a course pitch thread.

Course threads and pitch
M6 x 1
M8 x 1.25
M10 x 1.5
M12 x 1.5
M16 x 2
M20 x 2.5
M24 x 3

ENGINEERING

Send Quote Requests to info@automatedpt.com
Call +1(800)985-6929 To Order or Order Online At Nordgearmotors.com

Send Quote Requests to info@automatedpt.com Call +1(800)985-6929 To Order or Order Online At Nordgearmotors.com

NORD Service Factors

Selection – mass acceleration method

The selection tables list the produced torques, output speeds, and service factors, f_B, based on FLEXBLOC™ worm gearboxes in combination with 4-pole NORD 3-phase motors. The service factor indicates the safety of the gearbox at the given input power.

Each application has specific loading requirements such as peak loads, frequent start-ups, intermittent duty, and extreme ambient temperatures. All have a minimum service factor, f_{Bmin}, to ensure reliable operation. The unit chosen from the selection tables should have a service factor that is equal to or larger than the minimum service factor required.

The selection tables "1750/1150/850/100 rpm" can be used for motors other than 4-pole (1750 rpm) standard 3-phase models. The selection tables are based on a service factor $f_B = 1.0$. Observing the minimum service factor, f_{Bmin}, the motor power installed must not exceed P_{1max}/f_{Bmin}.

The required minimum service factor f_{Bmin} for an application is calculated as:

$$f_{Bmin} = f_{B0} \times f_{B1} \times f_{B2}$$

Factor f_{B0} accounts for the load type, A, B, or C; the start/stop frequency; and the daily operating time. Factor f_{B1} accounts for different ambient temperatures. Factor f_{B2} accounts for intermittent duty cycle. The following diagrams are used for defining the individual factors f_{B0}, f_{B1}, and f_{B2}.

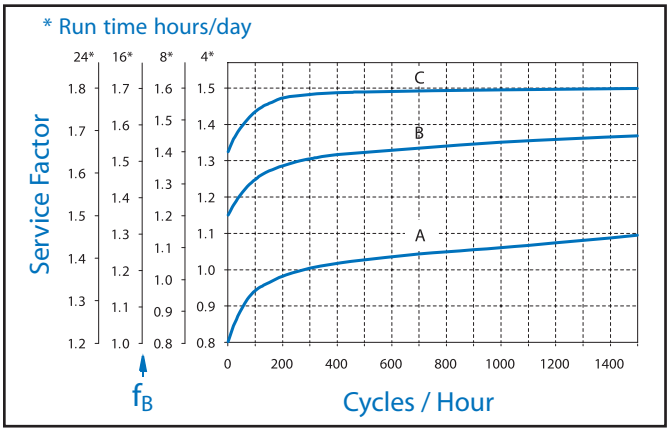

Examples for gearbox loading type:

A Light conveyor screws, fans, assembly lines, light conveyor belts, small agitators, elevators, cleaning machines, filling machines, inspection machines, and belt conveyors.

B Coilers, feed-mechanism drives in woodworking machines, dumbwaiters, balancing machines, thread-cutting machines, medium-sized agitators and mixers, winches, sliding doors, manure scrapers, packing machines, bending machines, and gear pumps.

C Shears, presses, punches, folding machines, tumbling barrels, vibrators, and shredders.

Other machines must be associated to A, B, or C depending on the load type they represent.

The load types A, B, and C are defined as follows:

A: uniform duty operation and $m_{af} \leq 0.25$
B: medium duty operation and $m_{af} \leq 3$
C: heavy duty operation and $m_{af} \leq 10$

The definition of the mass-acceleration-factor m_{af} is:

$$m_{af} = \frac{J_{ex.red}}{J_{motor}}$$

$J_{ex.red}$ = all external inertia's reflected to the motor shaft
J_{Mot} = mass moment of inertia of driving motor

In case of $m_{af} > 10$ please contact NORD.

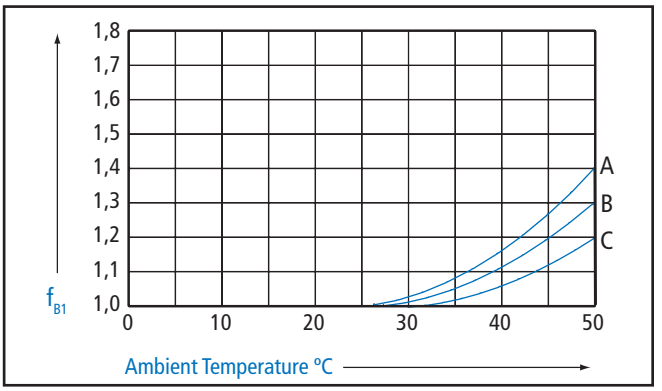

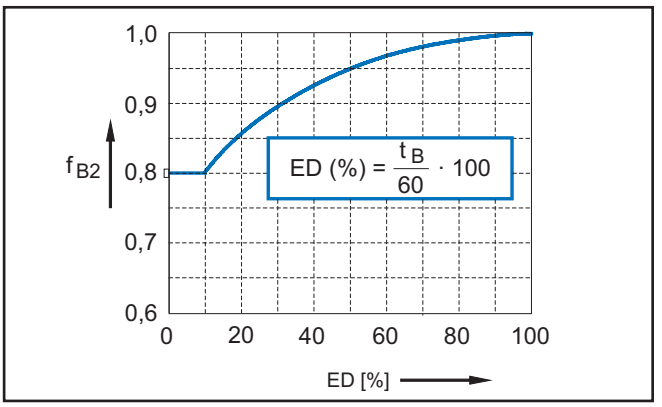

ENGINEERING

Send Quote Requests to info@automatedpt.com
Call +1(800)985-6929 To Order or Order Online At Nordgearmotors.com

Send Quote Requests to info@automatedpt.com Call +1(800)985-6929 To Order or Order Online At Nordgearmotors.com

AGMA Selection Method

Gearmotors

Before a gearmotor is selected, an application class number must be determined. Since application classification represents the normal relationship between gear design power rating and the maximum potential transmitted power, it is suggested that the application class number be applied to the nameplate rating of the electric motor. The application class numbers are I, II, and III.
Their relationship to service factor is:

Class Numbers	f_B
I	1.0 - 1.39
II	1.4 - 1.99
III	≥ 2.0

Application class numbers may be selected from the table. Some operational characteristics that affect an application's classification are:

- **Starting conditions:** Starting conditions where peak loads exceed 200 percent of rated load, applications with frequent starts and stops and reversing applications require special analysis. Rated load is defined as the unit rating with an application class number of I (1.0 - 1.39 service factor).
- **Overloads:** Loads in excess of the rated load are considered overloads. Overload can be of momentary duration, periodic, quasi-steady state, or vibratory in nature. The magnitude and the number of stress cycles require special analysis to prevent low cycle fatigue or yield stress failure. Applications with high torque motors, motors for intermittent operation and applications where extreme repetitive shock occurs or where high-energy loads must be absorbed as when stalling require special consideration.
- **Brake equipped applications:** When a gear drive is equipped with a brake that is used to decelerate the motion of the system, select the drive based on the brake rating or the equivalent power, whichever is greater. If the brake is located on the output shaft of the gear drive, special analysis is required.
- **Reliability and life requirement:** Applications requiring a high degree of reliability or unusually long life should be given careful consideration by the user and NORD GEAR before assigning an application class number. High reliability and life should be addressed by using an increased safety factor agreed to between NORD and the purchaser.

Synchronous motors, certain types of high torque induction motors and generator drives require special analysis. Synchronous motors have high transient torque during starting and restarting after they trip out momentarily.

Induction motors of special high slip design can produce extremely high starting torque. High torque loads are produced when the motor trips out for a very short time and then the trip re-closes.

Generators have extremely high loads when they are out of phase with the main system and when there are across the line short circuits.

Adjustments to the gear drive selection may be necessary when one or more of the following conditions exist:

- Ambient conditions. Extremes of temperature and environment.
- Lubrication. Any lubricant not in accordance with NORD's recommendations.
- Misalignment and distortions due to inadequate foundations.
- Reversing applications.
- High-risk applications involving human safety.

The purpose of this table is to provide a guide in the selection and application of gear drives designed and rated in accordance with AGMA Standard 6009.

The service factor table has been developed from the experience of manufacturers and users of gear drives for use in common applications and has been found to be generally satisfactory for the listed industries when gears are applied using AGMA standards. It is recommended that the user and NORD Gear agree upon class numbers for special applications when variations of the table may be required.

Send Quote Requests to info@automatedpt.com
Call +1(800)985-6929 To Order or Order Online At Nordgearmotors.com

Send Quote Requests to info@automatedpt.com Call +1(800)985-6929 To Order or Order Online At Nordgearmotors.com

AGMA Service Classes

NORD DRIVESYSTEMS

Application	Load Duration: Up to 3 hrs per day	3-10 hrs per day	Over 10 hrs per day
AGITATORS (mixers)			
Pure Liquids	I	I	II
Liquids and Solids	I	II	II
Liquids – Variable Density	I	II	II
BLOWERS			
Centrifugal	I	I	II
Lobe	I	II	II
Vane	I	II	II
BREWING AND DISTILLING			
Bottling Machinery	I	I	II
Brew Kettles – Continuous Duty	II	II	II
Cookers – Continuous Duty	II	II	II
Mash Tubs – Continuous Duty	II	II	II
Scale Hopper – Frequent Starts	II	II	II
CAN FILLING MACHINES	I	I	II
CAR DUMPERS	II	III	III
CAR PULLERS	I	II	II
CLARIFIERS	I	I	II
CLASSIFIERS	I	II	II
CLAY WORKING MACHINERY			
Brick Press	II	III	III
Briquette Machine	II	III	III
Pug Mill	I	II	II
COMPACTORS	III	III	III
COMPRESSORS			
Centrifugal	I	I	II
Lobe	I	II	II
Reciprocating, Multi-Cylinder	II	II	III
Reciprocating, Single-Cylinder	III	III	III
CONVEYORS – GENERAL PURPOSE			
Includes Apron, Assemble, Belt, Bucket, Chain, Flight, Oven and Screw Uniformly loaded or Fed	I	I	II
Heavy Duty – Not Uniformly Fed	I	II	II
Severe Duty – Reciprocating or Shaker	II	III	III
CRANES			
Main Hoist			
Medium Duty	II	II	II
Heavy Duty	III	III	III
Reversing	II	II	II
Skip Hoist	II	II	II
Trolley Drive	II	II	II
Bridge Drive	II	II	II
CRUSHER			
Stone or Ore	III	III	III
DREDGES			
Cable Reels	II	II	II
Conveyors	II	II	II
Cutter Head Dives	III	III	III
Pumps	III	III	III
Screen Drives	III	III	III
Stackers	II	II	II
Winches	II	II	II

Application	Load Duration: Up to 3 hrs per day	3-10 hrs per day	Over 10 hrs per day
ELEVATORS			
Bucket	I	II	II
Centrifugal Discharge	I	I	II
Escalators	I	I	II
Freight	I	II	II
Gravity Discharge	I	I	II
EXTRUDERS			
General	II	II	II
Plastics			
Variable Speed Drive	III	III	III
Fixed Speed Drive	III	III	III
Rubber			
Continuous Screw Operation	III	III	III
Intermittent Screw Operation	III	III	III
FANS			
Centrifugal	I	I	II
Cooling Towers	III	III	III
Forced Draft	II	II	II
Induced Draft	II	II	II
Industrial & Mine	II	II	II
FEEDERS			
Apron	I	II	II
Belt	I	II	II
Disc	I	I	II
Reciprocating	II	III	III
Screw	I	II	II
FOOD INDUSTRY			
Cereal Cooker	I	I	II
Dough Mixer	II	II	II
Meat Grinders	II	II	II
Slicers	I	II	II
GENERATORS AND EXCITERS	II	II	II
HAMMER MILLS	III	III	III
HOISTS			
Heavy Duty	III	III	III
Medium Duty	II	II	II
Skip Hoist	II	II	II
LAUNDRY TUMBLERS	II	II	II
LAUNDRY WASHERS	II	II	III

ENGINEERING

Send Quote Requests to info@automatedpt.com
Call +1(800)985-6929 To Order or Order Online At Nordgearmotors.com

NORD DRIVESYSTEMS

AGMA Service Classes

Application	Load Duration: Up to 3 hrs per day	3-10 hrs per day	Over 10 hrs per day
LUMBER INDUSTRY			
Barkers			
Spindle Feed	II	II	II
Main Drive	III	III	III
Conveyors			
Burner	II	II	II
Main or Heavy Duty	II	II	II
Main log	III	III	III
Re-saw, Merry-Go-Round	II	II	II
Slab	III	III	III
Transfer	II	II	II
Chains			
Floor	II	II	II
Green	II	II	III
Cut-Off Saws			
Chain	II	II	III
Drag	II	II	III
Debarking Drums	III	III	III
Feeds			
Edger	II	II	II
Gang	II	III	III
Trimmer	II	II	II
Long Deck	III	III	III
Log Hauls – Incline – Well Type	III	III	III
Log Turning Devices	III	III	III
Planer Feed	II	II	II
Planer Tilting Hoists	II	II	II
Rolls – live-off brg. – Roll Cases	III	III	III
Sorting Table	II	II	II
Tipple Hoist	II	II	II
Transfers			
Chain	II	II	III
Craneway	II	II	III
Tray Drives	II	II	II
Veneer Lathe Drives	II	II	II
METAL MILLS			
Draw Bench Carriage and Main Drive	II	II	II
Runout Table			
Non-reversing Group Drives	II	II	II
Individual Drives	III	III	III
Reversing	III	III	III
Slab Pushers	II	II	II
Shears	III	III	III
Wire drawing	II	II	II
Wire Winding Machine	II	II	II
METAL STRIP PROCESSING MACHINERY			
Bridles	II	II	II
Coilers & Uncoilers	I	I	II
Edge Trimmers	I	II	II
Flatteners	II	II	II
Loopers (Accumulators)	I	I	I
Pinch Rolls	II	II	I
Scrap Choppers	II	II	II
Shears	III	III	III
Slitters	I	II	II

Application	Load Duration: Up to 3 hrs per day	3-10 hrs per day	Over 10 hrs per day
MILLS, ROTARY TYPE			
Ball & Rod			
Spur Ring Gear	III	III	III
Helical Ring Gear	II	II	II
Direct Connected	III	III	III
Cement Kilns	II	II	II
Dryers & Coolers	II	II	II
PAPER MILLS[1)]			
Agitator (Mixer)	II	II	II
Agitator for Pure liquors	II	II	II
Barking Drums	III	III	III
Barkers – Mechanical	III	III	III
Beater	II	II	II
Breaker Stack	II	II	II
Calender[2)]	II	II	II
Chipper	III	III	III
Chip Feeder	II	II	II
Coating Rolls	II	II	II
Conveyors			
Chip, Bark, Chemical	II	II	II
log (including Slab)	III	III	III
Couch Rolls	II	II	II
Cutter	III	III	III
Cylinder Molds	II	II	II
Dryers[2)]			
Paper Machine	II	II	II
Conveyor Type	II	II	II
Embosser	II	II	II
Extruder	II	II	II
Fourdrinier Rolls (Includes lump Breaker, Dandy Roll, Wire Turning, and Return Rolls)	II	II	II
Jordan	II	II	II
Kiln Drive	II	II	II
Mt. Hope Roll	II	II	II
Paper Rolls	II	II	II
Platter	II	II	II
Presses – Felt & Suction	II	II	II
Pulper	III	III	III
Pumps – Vacuum	II	II	II
Reel (Surface Type)	II	II	II
Screens			
Chip	II	II	II
Rotary	II	II	II
Vibrating	III	III	III
Size Press	II	II	II
Supercalendar[3)]	II	II	II
Thickener (AC Motor)	II	II	II
Thickener (DC Motor)	II	II	II
Washer (AC Motor)	II	II	II
Washer (DC Motor)	II	II	II
Wind and Unwind Stand	I	I	I
Winders (Surface Type)	II	II	II
Yankee Dryers[2)]	II	II	II

Send Quote Requests to info@automatedpt.com
Call +1(800)985-6929 To Order or Order Online At Nordgearmotors.com

Send Quote Requests to info@automatedpt.com Call +1(800)985-6929 To Order or Order Online At Nordgearmotors.com

AGMA Service Classes

NORD DRIVESYSTEMS

Application	Load Duration Up to 3 hrs per day	3-10 hrs per day	Over 10 hrs per day
PLASTICS INDUSTRY – PRIMARY PROCESSING			
Intensive Internal Mixers			
Batch Mixers	III	III	III
Continuous Mixers	II	II	II
Batch Drop Mill – 2 smooth rolls	II	II	II
Continuous Feed, Holding &	II	II	II
Biend Mill Calendars	II	II	II
PLASTICS INDUSTRY – SECONDARY PROCESSING			
Blow Molders	II	II	II
Coating	II	II	II
Film	II	II	II
Pipe	II	II	II
Pre-Plasticizers	II	II	II
Rods	II	II	II
Sheet	II	II	II
Tubing	II	II	II
PULLERS – BARGE HAUL	II	II	II
PUMPS			
Centrifugal	I	I	II
Proportioning	II	II	II
Reciprocating			
Single Acting, 3 or more cylinders	II	II	II
Double Acting, 2 or more cylinders	II	II	II
Rotary			
Gear Type	I	I	II
Lobe	I	I	II
Vane	I	I	II
RUBBER INDUSTRY			
Intensive Internal Mixers			
Batch Mixers	III	III	III
Continuous Mixers	II	II	II
Mixing Mill			
2 smooth rolls	II	II	II
1 or 2 corrugated rolls	III	III	III
Batch Drop Mill – 2 smooth rolls	II	II	II
Cracker Warmer – 2 roll, 1 corrugated roll	III	III	III
Cracker – 2 corrugated rolls	III	III	III
Holding, Feed & Blend Mill – 2 rolls	II	II	II
Refiner – 2 rolls	II	II	II
Calendars	II	II	II
SAND MULLER	II	II	II
SEWAGE DISPOSAL EQUIPMENT			
Bar Screens	II	II	II
Chemical Feeders	II	II	II
Dewatering Screens	II	II	II
Scum Breakers	II	II	II
Slow or Rapid Mixers	II	II	II
Sludge Collectors	II	II	II
Thickener	II	II	II
Vacuum Filters	II	II	II

Application	Load Duration Up to 3 hrs per day	3-10 hrs per day	Over 10 hrs per day
SCREENS			
Air Washing	I	I	II
Rotary – Stone or Gravel	II	II	II
Traveling Water Intake I	I	I	I
SCREW CONVEYORS			
Uniformly loaded or Fed	I	I	II
Heavy Duty	I	II	II
SUGAR INDUSTRY			
Beet Slicer	III	III	III
Cane Knives	II	II	II
Crushers	II	II	II
Mills (low speed end)	III	III	III
TEXTILE INDUSTRY			
Batchers	II	II	II
Calendars	II	II	II
Cards	II	II	II
Dry Cans	II	II	II
Dyeing Machinery	II	II	II
Looms	II	II	II
Mangles	II	II	II
Nappers	II	II	II
Pads	II	II	II
Siashers	II	II	II
Soapers	II	II	II
Spinners	II	II	II
Tenter Frames	II	II	II
Washers	II	II	II
Winders	II	II	II

Notes to GEARMOTOR SERVICE FACTOR table:

1) The class numbers listed for paper mill applications are consistent with those shown in TAPPI (Technical Association of Pulp and Paper Industry) Technical Information Sheet 0406-18 1967, Service Factors for Gears on major Equipment in the Paper and Pulp Industry.

2) Anti-friction bearings only.

3) A Class Number of I may be applied at base speed of a supercalendar operating over a speed range of part-range constant horsepower and part-range constant torque where the constant horsepower speed range is greater than 1.5 to 1. A Class Number of II is applicable to supercalendars operating over the entire speed range at constant torque or where the constant horsepower speed range is less than 1.5 to1.

ENGINEERING

Send Quote Requests to info@automatedpt.com
Call +1(800)985-6929 To Order or Order Online At Nordgearmotors.com

Send Quote Requests to info@automatedpt.com Call +1(800)985-6929 To Order or Order Online At Nordgearmotors.com

AGMA Service Factors

Speed Reducers

Before an enclosed speed reducer or increaser can be selected for any application, an equivalent unit power rating (service factor = 1.0) must be determined. This is done by multiplying the specified power by the service factor. Since the service factor represents the normal relationship between the gear unit rating and the required application power, it is suggested that the service factor be applied to the nameplate rating of the prime mover or driven machine rating, as applicable.

NORD GEAR and the user must agree upon which power, prime mover rating or driven machine requirements, should dictate the selection of the gear drive. It is necessary that the gear drive selected have a rated unit capacity equal to or in excess of this "equivalent unit power rating".

All service factors listed are 1.0 or greater. Service factors less than 1.0 can be used in some applications when specified by the user and agreed to by NORD GEAR.

The REDUCER SERVICE FACTOR table should be used with caution, since much higher values have occurred in some applications. Values as high as ten have been used. On some applications up to six times nominal torque can occur, such as: Turbine/Generator drives, Heavy Plate and Billet rolling mills.

It has been developed from the experience of manufacturers and users of gear drives for use in common applications. It is suggested that service factors for special applications be agreed upon by the user and NORD GEAR when variations of the values in the table may be required.

Service factors shown are for reducers driven by motors (electric or hydraulic) and turbines (steam or gas) according to AGMA 6010. When the driver is a single cylinder or multi-cylinder engine, the service factors from the table must be modified for the appropriate type of prime mover.

As an example, if the application is a centrifugal blower, the service factor from the REDUCER SERVICE FACTOR table is 1.25 for a motor or turbine. The CONVERSION TABLE changes this value to 1.75 for a single cylinder engine and 1.50 for a multi-cylinder engine.

CAUTION: Any user of enclosed gear drives should make sure that the latest available information affecting the selection of a gear drive is used. When better load intensity data is available on the driving or driven equipment, this should be considered when a service factor is selected.

Conversion Table

Electric Motor, Steam & Gas Turbines, Hydraulics	Single-Cylinder Engines	Multi-Cylinder Engines
1.00	1.50	1.25
1.25	1.75	1.50
1.50	2.0	1.75
1.75	2.25	2.00
2.00	2.50	2.25
2.25	2.75	2.50
2.50	3.00	2.75
2.75	3.25	3.00
3.00	3.50	3.25

Application	Load Duration: Up to 3 hrs per day	3-10 hrs per day	Over 10 hrs per day
AGITATORS (mixers)			
Pure Liquids	1.00	1.00	1.25
Liquids and Solids	1.00	1.25	1.50
Liquids – Variable Density	1.00	1.25	1.50
BLOWERS			
Centrifugal	1.00	1.25	1.50
Lobe	1.00	1.25	1.50
Vane	1.00	1.00	1.25
BREWING AND DISTILLING			
Bottling Machinery	1.00	1.00	1.25
Brew Kettles – Continuous Duty	1.00	1.00	1.25
Cookers – Continuous Duty	1.00	1.00	1.25
Mash Tubs – Continuous Duty	1.00	1.00	1.25
Scale Hopper – Frequent Starts	1.00	1.25	1.50
CAN FILLING MACHINES	1.00	1.00	1.25
CAR DUMPERS	1.25	1.50	1.75
CAR PULLERS	1.00	1.25	1.50
CLARIFIERS	1.00	1.00	1.25
CLASSIFIERS	1.00	1.25	1.50
CLAY WORKING MACHINERY			
Brick Press	1.25	1.50	1.75
Briquette Machine	1.25	1.50	1.75
Pug Mill	1.00	1.25	1.50
COMPACTORS	1.50	1.75	2.00
COMPRESSORS			
Centrifugal	1.00	1.00	1.25
Lobe	1.00	1.25	1.50
Reciprocating, Multi-Cylinder	1.00	1.25	1.50
Reciprocating, Single-Cylinder	1.25	1.50	1.75
CONVEYORS – GENERAL PURPOSE			
Uniformly loaded or fed	1.00	1.00	1.25
Not uniformly fed	1.00	1.25	1.50
Reciprocating or shaker	1.25	1.50	1.75
CRANES			
Dry dock			
Main hoist	1.25	1.50	1.75
Auxilliary hoist	1.25	1.50	1.75
Boom hoist	1.25	1.50	1.75
Slewing drive	1.25	1.50	1.75
Traction drive	1.50	1.50	1.50
Industrial Duty			
Main hoist	1.00	1.25	1.50
CRUSHER			
Stone or ore	1.50	1.75	2.00

Send Quote Requests to info@automatedpt.com
Call +1(800)985-6929 To Order or Order Online At Nordgearmotors.com

Send Quote Requests to info@automatedpt.com
Call +1(800)985-6929 To Order or Order Online At Nordgearmotors.com

AGMA Service Factors

NORD DRIVESYSTEMS

Application	Load Duration: Up to 3 hrs per day	3-10 hrs per day	Over 10 hrs per day
DREDGES			
Cable reels	1.00	1.25	1.50
Conveyors	1.00	1.25	1.50
Cutter Head Dives	1.25	1.50	1.75
Pumps	1.00	1.25	1.50
Screen Drives	1.25	1.50	1.75
Stackers	1.00	1.25	1.50
Winches	1.00	1.25	1.50
ELEVATORS			
Bucket	1.00	1.25	1.50
Centrifugal Discharge	1.00	1.00	1.25
Gravity Discharge	1.00	1.00	1.25
EXTRUDERS			
General	1.25	1.25	1.25
Plastics			
Variable Speed Drive	1.50	1.50	1.50
Fixed Speed Drive	1.75	1.75	1.75
Rubber			
Continuous Screw Operation	1.50	1.50	1.50
Intermittent Screw Operation	1.75	1.75	1.75
FANS			
Centrifugal	1.00	1.00	1.25
Forced Draft	1.25	1.25	1.25
Induced Draft	1.00	1.25	1.50
Industrial & Mine	1.00	1.25	1.50
FEEDERS			
Apron	1.00	1.25	1.50
Belt	1.00	1.25	1.50
Disc	1.00	1.00	1.25
Reciprocating	1.25	1.50	1.75
Screw	1.00	1.25	1.50
FOOD INDUSTRY			
Cereal Cooker	1.00	1.00	1.25
Dough Mixer	1.00	1.25	1.50
Meat Grinders	1.00	1.25	1.50
Slicers	1.00	1.25	1.50
GENERATORS AND EXCITERS	1.00	1.00	1.25
HAMMER MILLS	1.50	1.50	1.75
HOISTS			
Heavy Duty	1.25	1.50	1.75
Medium Duty	1.00	1.25	1.50
Skip Hoist	1.00	1.25	1.50
LAUNDRY TUMBLERS	1.00	1.25	1.50
LAUNDRY WASHERS	1.25	1.25	1.50

Application	Load Duration: Up to 3 hrs per day	3-10 hrs per day	Over 10 hrs per day
LUMBER INDUSTRY			
Barkers	1.25	1.25	1.50
Spindle Feed	1.50	1.50	1.50
Main Drive	1.25	1.25	1.50
Conveyors			
Burner	1.25	1.25	1.50
Main or Heavy Duty	1.50	1.50	1.50
Main log	1.50	1.50	1.75
Re-saw, Merry-Go-Round	1.25	1.25	1.50
Slab	1.50	1.50	1.75
Transfer	1.25	1.25	1.50
Chains			
Floor	1.50	1.50	1.50
Green	1.50	1.50	1.50
Cut-Off Saws			
Chain	1.50	1.50	1.50
Drag	1.50	1.50	1.50
Debarking Drums	1.50	1.50	1.75
Feeds			
Edger	1.25	1.25	1.50
Gang	1.50	1.50	1.50
Trimmer	1.25	1.25	1.50
Long Deck	1.50	1.50	1.50
Log Hauls – Incline – Well Type	1.50	1.50	1.50
Log Turning Devices	1.50	1.50	1.50
Planer Feed	1.25	1.25	1.50
Planer Tilting Hoists	1.50	1.50	1.50
Rolls – live-off brg. – Roll Cases	1.50	1.50	1.50
Sorting Table	1.25	1.50	1.50
Tipple Hoist	1.25	1.25	1.50
Transfers			
Chain	1.50	1.50	1.50
Causeway	1.50	1.50	1.50
Tray Drives	1.25	1.25	1.50
METAL MILLS			
Draw Bench Carriage and Main Drive	1.00	1.25	1.50
Runout Table			
Non-reversing			
Group Drives	1.00	1.25	1.50
Individual Drives	1.50	1.50	1.75
Reversing	1.50	1.50	1.75
Slab Pushers	1.25	1.25	1.50
Shears	1.50	1.50	1.75
Wire drawing	1.00	1.25	1.50
Wire Winding Machine	1.00	1.25	1.50

ENGINEERING

Send Quote Requests to info@automatedpt.com
Call +1(800)985-6929 To Order or Order Online At Nordgearmotors.com

Send Quote Requests to info@automatedpt.com
Call +1(800)985-6929 To Order or Order Online At Nordgearmotors.com

NORD DRIVESYSTEMS

AGMA Service Factors

Application	Load Duration: Up to 3 hrs per day	3-10 hrs per day	Over 10 hrs per day
METAL STRIP PROCESSING MACHINERY			
Bridles	1.25	1.25	1.50
Coilers and uncoilers	1.00	1.00	1.25
Edge Trimmers	1.00	1.25	1.50
Flatteners	1.00	1.25	1.50
Loopers (accumulators)	1.00	1.00	1.00
Pinch rolls	1.00	1.25	1.50
Scrap choppers	1.00	1.25	1.50
Shears	1.50	1.50	1.75
Slitters	1.00	1.25	1.50
MILLS, ROTARY TYPE			
Ball & Rod			
Spur Ring Gear	1.50	1.50	1.75
Helical Ring Gear	1.50	1.50	1.50
Direct Connected	1.50	1.50	1.75
Cement Kilns	1.50	1.50	1.50
Dryers & Coolers	1.50	1.50	1.50
MIXERS CONCRETE	1.00	1.25	1.50
PAPER MILLS[1]			
Agitator (Mixer)	1.50	1.50	1.50
Agitator for Pure liquors	1.25	1.25	1.25
Barking Drums	1.75	1.75	1.75
Barkers – Mechanical	1.75	1.75	1.75
Beater	1.50	1.50	1.50
Breaker Stack	1.25	1.25	1.25
Calender[2]	1.25	1.25	1.25
Chipper	1.75	1.75	1.75
Chip Feeder	1.50	1.50	1.50
Coating Rolls	1.25	1.25	1.25
Conveyors			
Chip, Bark, Chemical	1.25	1.25	1.25
log (including Slab)	1.75	1.75	1.75
Couch Rolls	1.25	1.25	1.25
Cutter	1.75	1.75	1.75
Cylinder Molds	1.25	1.25	125
Dryers[2]			
Paper Machine	1.25	1.25	1.25
Conveyor Type	1.25	1.25	1.25
Embosser	1.25	1.25	1.25
Extruder	1.50	1.50	1.50
Fourdrinier Rolls (Includes lump Breaker, Dandy Roll, Wire Turning, and Return Rolls)	1.25	1.25	1.25
Jordan	1.25	1.25	1.25
Kiln Drive	1.50	1.50	1.50
Mt. Hope Roll	1.25	1.25	1.25
Paper Rolls	1.25	1.25	1.25

Application	Load Duration: Up to 3 hrs per day	3-10 hrs per day	Over 10 hrs per day
PAPER MILLS (cont)			
Presses – Felt & Suction	1.25	1.25	1.25
Pulper	1.50	1.50	1.75
Pumps – Vacuum	1.50	1.50	1.50
Reel (Surface Type)	1.25	1.25	1.50
Screens			
Chip	1.50	1.50	1.50
Rotary	1.50	1.50	1.50
Vibrating	1.75	1.75	1.75
Size Press	1.25	1.25	1.25
Supercalendar[3]	1.25	1.25	1.25
Thickener (AC Motor)	1.50	1.50	1.50
Thickener (DC Motor)	1.25	1.25	1.25
Washer (AC Motor)	1.50	1.50	1.50
Washer (DC Motor)	1.25	1.25	1.25
Wind and Unwind Stand	1.00	1.00	1.00
Winders (Surface Type)	1.25	1.25	1.25
Yankee Dryers[2]	1.25	1.25	1.25
PLASTICS INDUSTRY – PRIMARY PROCESSING			
Intensive Internal Mixers			
Batch Mixers	1.75	1.75	1.75
Continuous Mixers	1.50	1.50	1.50
Batch Drop Mill – 2 smooth rolls			
Continuous Feed, Holding & Biend Mill	1.25	1.25	1.25
Calendars	1.50	1.50	1.50
PLASTICS INDUSTRY – SECONDARY PROCESSING			
Blow Molders	1.50	1.50	1.50
Coating	1.25	1.25	1.25
Film	1.25	1.25	1.25
Pipe	1.25	1.25	1.25
Pre-Plasticizers	1.50	1.50	1.50
Rods	1.25	1.25	1.25
Sheet	1.25	1.25	1.25
Tubing	1.25	1.25	1.50
PULLERS – BARGE HAUL	1.00	1.50	1.75
PUMPS			
Centrifugal	1.00	1.00	1.25
Proportioning	1.00	1.25	1.50
Reciprocating			
Single Acting, 3 or more cylinders	1.00	1.25	1.50
Double Acting, 2 or more cylinders	1.00	1.25	1.50
Rotary			
Gear Type	1.00	1.00	1.50
Lobe	1.00	1.00	1.25
Vane	1.00	1.00	1.25

Send Quote Requests to info@automatedpt.com
Call +1(800)985-6929 To Order or Order Online At Nordgearmotors.com

Send Quote Requests to info@automatedpt.com Call +1(800)985-6929 To Order or Order Online At Nordgearmotors.com

AGMA Service Factors

NORD DRIVESYSTEMS

Application	Load Duration Up to 3 hrs per day	3-10 hrs per day	Over 10 hrs per day
RUBBER INDUSTRY			
Intensive Internal Mixers			
Batch Mixers	1.50	1.75	1.75
Continuous Mixers	1.25	1.50	1.50
Mixing Mill			
2 smooth rolls	1.50	1.50	1.50
1 or 2 corrugated rolls	1.75	1.75	1.75
Batch Drop Mill – 2 smooth rolls	1.50	1.50	1.50
Cracker Warmer – 2 roll, 1 corrugated roll	1.75	1.75	1.75
Cracker – 2 corrugated rolls	1.75	1.75	1.75
Holding, Feed & Blend Mill – 2 rolls	1.25	1.25	1.25
Refiner – 2 rolls	1.50	1.50	1.50
Calendars	1.50	1.50	1.50
SAND MILLER	1.00	1.25	1.50
SEWAGE DISPOSAI EQUIPMENT			
Bar Screens	1.00	1.00	1.25
Chemical Feeders		1.00	1.25
Dewatering Screens	1.00	1.25	1.50
Scum Breakers	1.00	1.25	1.50
Slow or Rapid Mixers	1.00	1.25	1.50
Sludge Collectors	1.00	1.00	1.25
Thickener	1.00	1.25	1.50
Vacuum Filters	1.00	1.25	1.50
SCREENS			
Air Washing	1.00	1.00	1.25
Rotary – Stone or Gravel	1.00	1.25	1.50
Traveling Water Intake I	1.00	1.00	1.25
SCREW CONVEYORS			
Uniformly loaded or Fed			
Heavy Duty			
SUGAR INDUSTRY			
Beet Slicer	1.50	1.50	1.75
Cane Knives	1.50	1.50	1.50
Crushers	1.50	1.50	1.50
Mills (low speed end)	1.50	1.50	1.50

Application	Load Duration Up to 3 hrs per day	3-10 hrs per day	Over 10 hrs per day
TEXTILE INDUSTRY			
Batchers	1.00	1.25	1.50
Calendars	1.00	1.25	1.50
Cards	1.00	1.25	1.50
Dry Cans	1.00	1.25	1.50
Dyeing Machinery	1.00	1.25	1.50
Looms	1.00	1.25	1.50
Mangles	1.00	1.25	1.50
Nappers	1.00	1.25	1.50
Pads	1.00	1.25	1.50
Siashers	1.00	1.25	1.50
Soapers	1.00	1.25	1.50
Spinners	1.00	1.25	1.50
Tenter Frames	1.00	1.25	1.50
Washers	1.00	1.25	1.50
Winders	1.00	1.25	1.50

Notes to REDUCER SERVICE FACTOR table:

1) Service factors for paper mill applications are applied to the nameplate rating of the electric motor at the motor rated based speed.

2) Anti-friction bearings only. Use 1.5 for sleeve bearings.

3) A service factor of 1.0 may be applied at base speed of a super calender operating over-speed range of part range constant horsepower, part range constant torque where the constant horsepower speed range is greater that 1.5 to 1. A service factor of 1.25 is applicable to super calenders operating over the entire speed range at constant torque or where the constant horsepower speed range is less than 1.5 to 1. Explanatory notes.

Send Quote Requests to info@automatedpt.com
Call +1(800)985-6929 To Order or Order Online At Nordgearmotors.com

Send Quote Requests to info@automatedpt.com Call +1(800)985-6929 To Order or Order Online At Nordgearmotors.com

Gearmotor Weights [lb]

Type	63S	63 L	71 S	71 L	80 S	80 L	90 S	90 L	100 L	100 LA	112 M/4
SK 1SI31	13	14	17	19	23	25	-	-	-	-	-
SK 1SI40	16	17	20	22	26	28	34	39	-	-	-
SK 1SI50	19	20	23	25	29	31	37	42	-	-	-
SK 1SI63	26	27	30	32	36	38	44	49	60	66	-
SK 1SI75	40	41	44	46	50	52	58	63	74	80	100

Above weights are approximate. Depending upon ratio, oil quantity and optional equipment, reducer weights may be different than shown. Exact weights can be obtained after the unit is fully assembled.

Reducer Weights [lb]

Type	W	48C	56C	140TC	180TC
SK 1SI31	-	4.1	4.4	-	-
SK 1SI40	7.4	-	7.2	7.2	-
SK 1SI50	10.6	-	10.3	10.4	-
SK 1SI63	17.5	-	17.3	17.4	19.7
SK 1SI75	17.8	-	35.2	35.2	36.2

Above weights are approximate. Depending upon ratio, oil quantity and optional equipment, reducer weights may be different than shown. Exact weights can be obtained after the unit is fully assembled.

Option Kit Weights [lb]

Type	SK 1SI31	SK 1SI40	SK 1SI50	SK 1SI63	SK 1SI75
Worm Module	3.1	5.5	8.7	15.6	32.0
NEMA 48C	1.0	-	-	-	-
NEMA 56C	1.3	1.6	1.6	1.6	3.2
NEMA 140TC	-	1.7	1.7	1.7	3.2
NEMA 180TC	-	-	-	4.1	4.2
Solid Input Shaft (W)	-	1.9	1.9	1.9	-
Helical Input Stage (H10)	-	3.8	3.8	3.8	-
Double Worm Adapter	-	1.1	1.1	1.1	3.0
Plug-in Solid Shaft (V)	0.5	1.1	1.7	3.2	7.0
Double Solid Shaft (L)	0.5	1.2	2.1	3.7	7.4
B5 output Flange (F)	0.5	0.8	1.4	1.5	1.9
Torque Arm (D)	0.5	0.8	0.9	1.3	1.9
Shaft Cover (H)	0.2	0.4	0.4	0.5	0.9
Foot Plate (X)	0.60	0.68	1.10	1.78	-
Hollow Shaft Bushing Kit (J)	-	-	0.5	1.2	2.5

Above weights are approximate. Depending upon ratio, oil quantity and optional equipment, reducer weights may be different than shown. Exact weights can be obtained after the unit is fully assembled.

Send Quote Requests to info@automatedpt.com
Call +1(800)985-6929 To Order or Order Online At Nordgearmotors.com

MINICASE® Weights

NORD DRIVESYSTEMS

Approximate Gearmotor Weights [lb]

Type	63S	63 L	71 S	71 L	80 S	80 L	90 S	90 L	100L	112M
SK 1SMI31	11	13	15	17	-	-	-	-	-	-
SK 1SMI40	13	15	17	19	26	28	-	-	-	-
SK 1SMI40/31	17	19	22	-	-	-	-	-	-	-
SK 1SMI50	-	-	22	24	30	32	42	45	-	-
SK 1SMI50/31	22	24	26	26	-	-	-	-	-	-
SK 1SMI63	-	-	-	-	32	35	45	49	-	-
SK 1SMI63/31	26	28	30	30	-	-	-	-	-	-
SK 1SMI75	-	-	-	-	-	-	-	-	-	-
SK 1SMI75/40	44	46	48	48	55	57	-	-	-	-

Approximate NEMA Gearmotor Weights [lb]

Type	56C-63S	56C-63 L	56C-71 S	56C-71 L	56C-80 S	56C-80 L	140TC-80L	140TC-90 S	140TC-90 L	180TC-100L	180TC-112M
SK 1SMI31	12	14	16	18	-	-	-	-	-	-	-
SK 1SMI40	14	17	18	21	27	30	30	42	-	-	-
SK 1SMI40/H10	19	19	23	-	-	-	-	-	-	-	-
SK 1SMI40/31	18	19	23	-	-	-	-	-	-	-	-
SK 1SMI50	19	21	23	25	32	34	34	49	49	-	-
SK 1SMI50/H10	23	23	27	27	-	-	-	-	-	-	-
SK 1SMI50/31	23	23	27	27	-	-	-	-	-	-	-
SK 1SMI63	23	23	27	27	34	36	36	51	51	-	-
SK 1SMI63/H10	25	28	29	32	-	-	-	-	-	-	-
SK 1SMI63/31	25	27	29	31	-	-	-	-	-	-	-
SK 1SMI75	-	-	45	47	54	56	56	71	71	101	109
SK 1SMI75/40	47	48	51	49	56	58	61	-	-	-	-

ENGINEERING

Approximate Reducer Weights [lb]

Type	W	56C	140TC	180TC
SK 1SMI31	6	9	9	-
SK 1SMI40	10	15	15	-
SK 1SMI50	16	22	22	-
SK 1SMI63	24	26	26	-
SK 1SMI75	42	44	44	46

Above weights are approximate. Depending upon ratio, oil quantity and optional equipment, reducer weights may be different than shown. Exact weights can be obtained after the unit is fully assembled.

Send Quote Requests to info@automatedpt.com
Call +1(800)985-6929 To Order or Order Online At Nordgearmotors.com

Send Quote Requests to info@automatedpt.com
Call +1(800)985-6929 To Order or Order Online At Nordgearmotors.com

NORD Contacts

Contact Information:

- North America
- Global

NORD DRIVESYSTEMS

www.nord.com

Send Quote Requests to info@automatedpt.com
Call +1(800)985-6929 To Order or Order Online At Nordgearmotors.com

Send Quote Requests to info@automatedpt.com
Call +1(800)985-6929 To Order or Order Online At Nordgearmotors.com

Contacts - North America

United States

NORD Gear Corporation - Midwest Headquarters
800 Nord Drive, P.O. 367
Waunakee, WI 53597

toll free: 1-888-314-6673
phone: 1-608-849-7300
fax: 1-800-373-6673
eMail: info.us@nord.com

NORD Gear Corporation - East
300-E Forsyth Hall Drive
Charlotte, NC 28273

toll free: 1-888-314-6673
phone: 1-608-849-0140
fax: 1-888-259-6673
eMail: info.us@nord.com

NORD Gear Corporation - West
1180 Railroad Street
Corona, CA 92882

toll free: 1-888-314-6673
phone: 1-608-849-0190
fax: 1-888-408-6673
eMail: info.us@nord.com

For Sales office or distributors please contact us or see our website at www.nord.com

Global Headquarters Germany

Getriebebau NORD GmbH & Co. KG
Getriebebau-Nord-Straße 1
22941 Bargteheide
Germany

phone: +49-4532-2890
Fax: +49 4532-289-2253
eMail: info@nord.com

For Sales office or distributors please contact us or see our website at www.nord.com

Canada

NORD Gear Limited
41 West Drive
Brampton, Ontario L6T 4A1

toll free: 1-800-668-4378
phone: 1-905-796-3606
fax: 1-905-796-8130
eMail: info.ca@nord.com

For Sales office or distributors please contact us or see our website at www.nord.com

Mexico

Mexico NORD Drivesystems SA DE CV
Mexico Regional Office
Av. Lázaro Cárdenas 1007 Pte.
San Pedro Garza Garcia, N.L.
México, C.P. 66266

phone: +52-81-8220-9165
fax: +52-81-8220-9044
eMail: info.mx@nord.com

For Sales office or distributors please contact us or see our website at www.nord.com

CONTACTS

Send Quote Requests to info@automatedpt.com
Call +1(800)985-6929 To Order or Order Online At Nordgearmotors.com

Send Quote Requests to info@automatedpt.com
Call +1(800)985-6929 To Order or Order Online At Nordgearmotors.com

International Contacts With the Locator Tool

Nord Locator Tool

For international contacts (outside of North America), NORD makes it easy for you to locate address and phone number of the sales contact or facility nearest you on our homepage or with the web address: www.locator.nord.com.

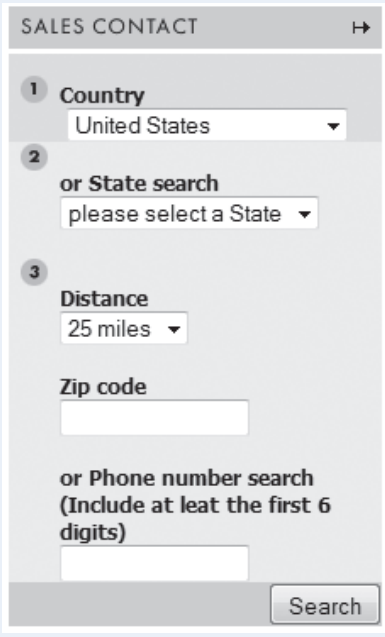

It is as easy as submitting your location and we provide you with a list of our nearest district managers, distributors and plant locations for your convenience.

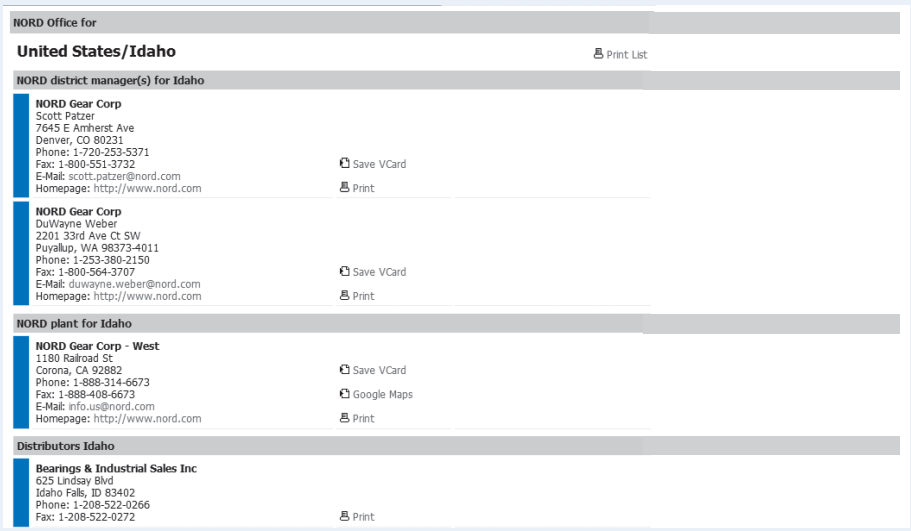

CONTACTS

Send Quote Requests to info@automatedpt.com
Call +1(800)985-6929 To Order or Order Online At Nordgearmotors.com

NORD GEAR LIMITED

Terms and Conditions of Sale

1. CONTRACT

Any contract between Nord Gear Limited, hereinafter designated as "Seller", and the party or parties accepting these terms and conditions of sale and any agent, officer, servant, employee or subcontractor of such party or parties, hereinafter designated as "Buyer", is subject to the terms and conditions of sale hereinafter set forth. Any deviation from such terms and conditions must be specifically set forth in writing and consented to by Seller.

2. CONFIRMATION

An order shall be deemed accepted only when duly confirmed by Seller, at Nord Gear Limited's home office in Brampton, Ontario, and upon such confirmation the orders shall become a contract binding upon the parties hereto, their successors and assigns.

3. PRICES

Prices shown are list prices and may be subject to applicable discounts. Unless otherwise agreed upon in writing, prices are FOB factory Brampton, Ontario. Prices and discounts are subject to change without notice until the order is accepted. Seller's prices do not include cost of any inspection permits required.

4. LIMITED WARRANTY

Seller warrants the goods sold hereunder to be free from defects in material and workmanship under normal use and service not arising from misuse, negligence, or accident, including but not limited to the use, installation, and transportation of the goods by Buyer, its agents, servants, employees, or by carriers. This warranty shall pertain to any part or parts of any goods to which Buyer or its assigns has within one year from date of delivery given written notice of claimed defects to Seller. Buyer shall be required to furnish Seller with details of such defects and this warranty shall be effective as to such goods which Seller's examination shall disclose to its satisfaction to have been defective and which at Seller's option shall promptly thereafter be returned to Seller or its nominees. EXCEPT FOR THE EXPRESS WARRANTIES SET FORTH ABOVE, SELLER HAS MADE NO WARRANTIES, EXPRESS, IMPLIED OR STATUTORY, AS TO THE GOODS SOLD HEREUNDER, INCLUDING, BUT NOT LIMITED TO THEIR MERCHANTABILITY OR FITNESS FOR ANY PARTICULAR PURPOSE. ANY DESCRIPTION OR MODEL OF THE GOODS IS FOR IDENTIFICATION OR ILLUSTRATIVE PURPOSES ONLY AND SHALL NOT BE DEEMED TO CREATE AN EXPRESS WARRANTY. The Buyer's exclusive remedy for claims arising from defective or nonconforming goods shall be limited to the repair or replacement thereof at the Seller's sole option. THE SELLER SHALL NOT BE RESPONSIBLE OR LIABLE FOR CONSEQUENTIAL DAMAGES ARISING OUT OF OR IN CONNECTION WITH THE SALE, DELIVERY, USE, PERFORMANCE, OR SERVICE OF THE GOODS SOLD UNDER THIS AGREEMENT. SELLER SHALL NOT BE LIABLE FOR ANY LOST PROFITS OR FOR ANY CLAIM OR DEMAND AGAINST SELLER BY ANY PARTY. IN NO EVENT WILL SELLER BE LIABLE FOR SPECIAL, INDIRECT OR CONSEQUENTIAL DAMAGES, EVEN IF SELLER HAS BEEN ADVISED OF THE POSSIBILITY OF SUCH DAMAGES. SELLER'S AGGREGATE LIABILITY FOR DAMAGES UNDER THIS AGREEMENT, WHETHER ARISING FROM OR BASED UPON BREACH OF WARRANTY, BREACH OF CONTRACT, TORT OR OTHER CAUSE OF ACTION, SHALL IN NO CASE EXCEED THE PURCHASE PRICE THAT BUYER PAYS FOR THE PARTICULAR GOODS INVOLVED. Seller shall in no event be liable to any person or firm (including any assignee or Buyer) except Buyer and its successors. Unless specifically authorized by Seller in writing, Seller shall not become responsible for any repair work done by Buyer or any other party on any goods sold. Any costs of the return of such goods to Seller shall be borne by Buyer. Goods sold but not manufactured by Seller are being warranted as to defects in material and workmanship consistent with the limited warranty policy of the original manufacturer of the goods and if there is not such a limited warranty policy, the warranty shall be limited to the provisions of Article 4 herein. Standards for the operating characteristics of the gearboxes and the gear motors are in conformity with Seller's tests. THIS WARRANTY IS IN LIEU OF ALL OTHER EXPRESS OR IMPLIED WARRANTIES, INCLUDING ANY IMPLIED WARRANTY OF MERCHANTABILITY OR FITNESS FOR ANY PARTICULAR PURPOSE SELLER DOES NOT ASSUME, NOR DOES IT AUTHORIZE ANY PERSON TO ASSUME, ON ITS BEHALF, ANY OTHER OBLIGATION OR LIABILITY.

5. SHORTAGE AND NONCONFORMITY

Any claim of shortage or that the goods do not conform with the specifications of the order or model must be made in writing within ten (10) days after delivery of the goods (as to which such claim is made) to Buyer or its nominees, but in no event shall the claim be later than within the time limit provided by the carrier or insurance company, otherwise such claim shall be deemed waived. The samples, measurements, dimensions and weights contained in Seller's catalogs, sales manuals, photographs and drawings constitute only an approximate guide. Seller reserves the right to make any changes which Seller, in its absolute discretion, considers necessary. While the goods will be delivered principally according to specifications of standards or quantities agreed upon, insignificant deviations or insignificant changes in construction are permissible. The same applies to partial deliveries. In the event that Buyer has a verified claim of shortage or nonconformity of the goods to the specifications of the order or the model, and if such claim has been submitted within the required time limit as set forth above, Seller shall, at its own expense, make up for the shortage of the goods, or replace or repair the goods, as the cause may be, but in no event shall Seller be or become liable to Buyer or to any other person or persons for any loss in damage, direct or indirect, arising out of or caused by such incidents or for the loss of profits, business of good will. Shipping dates are estimates unless parties expressly agree on time of the essence.

6. FORCE MAJEURE

The obligation of Seller shall be modified or excused, as the case may be, for reasons of Acts of God, war, governmental law regulations, strikes or lock-outs, fire, breakdown of machinery, whether in its own business enterprise, or if for any other cause beyond Seller's control, the goods cannot be delivered or their delivery becomes delayed in whole or in part. In the above instances time for delivery shall be extended for the period of the delay caused, with the proviso, however, that either party may cancel in writing the undelivered portion of the order of contract if the delay exceeds six (6) months from the delivery date originally confirmed by Seller. In no event shall Seller become liable in the aforesaid instances to Buyer or any third party for consequential damages or business loss.

7. SHIPMENT AS UNIT

Each shipment by Seller shall be treated as a separate and distinct unit with respect, but only with respect to forwarding, terms of payment, and the making of claims by Buyer; provided, however, that if Buyer defaults in the payment of any obligation to Seller or any installments thereof, under any agreement between Buyer and Seller, or if Buyer refuses to accept any goods when tendered for delivery, Seller may, on fifteen (15) days written notice to Buyer, without prejudice to Seller's other lawful remedies, either defer further performance until the defaulted payments are made in full, or make future deliveries for cash in advance only, or to treat the entire contract or contracts with Buyer as breached by Buyer and pursue its remedies for breach.

8. BUYER'S REFUSAL OF D ELIVERY

If Buyer refuses to accept delivery of any goods tendered for delivery, then Seller, without prejudice to Seller's other lawful remedies, may either store or cause such goods to be stored in a warehouse, for Buyer's account and at Buyer's cost, risk and expense, or sell such goods (without notice) to any purchaser at public or private sale, and hold Buyer liable for any difference between (A) the contract price of the goods, and (B) the price at which goods are resold less the costs and expense of such resale including brokerage commissions, or restocking charges.

9. GOODS IN TRANSIT

If prior to delivery or while the goods are in transit, Buyer or Seller becomes bankrupt or insolvent, or any petition in bankruptcy or for the reorganization or for appointment of a receiver is filed against Buyer or Seller, as the case may be, then the other party hereto may forthwith terminate this contract by giving written notice of such termination. Such termination shall not affect any claim for damages available to Buyer, to Seller, as actually paid in money, is abated by any order of judgment entered or any plan adopted in any bankruptcy, reorganization, receivership, or similar proceeding. Such termination shall not prejudice Seller's rights to any amounts then due under the contract. If Buyer becomes bankrupt or insolvent or any petition in bankruptcy or for reorganization or if a state court receivership is filed against Buyer, then, at its option, Seller may take possession of any goods theretofore sold to Buyer, in connection with which the full purchase price has not been paid, analogous to the terms and provisions set forth in Paragraphs 11 and 12 hereinafter.

10.DELIVERY

(A)Unless otherwise agreed, delivery of the goods to any carrier shall constitute delivery to Buyer, and thereafter the risk of loss or damage to the goods shall be upon Buyer. (B) If Buyer does not give delivery instructions to Seller at least ten (10) days prior to the delivery date ex factory confirmed by Seller, Seller may deliver the goods to a carrier of its own choosing, at Buyer's cost and risk, or, at Seller's option may store the goods on the pier or on any warehouse at Buyer's cost and risk. Any purchase price in such event becomes due and payable within ten (10) days of such storage.

11. PAYMENT OF PURCHASE PRICE

Time of payment is of the essence under the contract. Upon default in any of the terms of the contract, or failure to comply with any of the conditions thereof, or upon seizure of the property under execution or other legal process, or if Buyer becomes bankrupt or insolvent, or any petitions for reorganization or for appointment of a receiver is filed against Buyer, or if Buyer makes any assignment for the benefit of its creditors or otherwise sells, encumbers or disposes of the goods, or if for any other reason Seller should deem itself insecure, the full amount of the purchase price then remaining unpaid shall at once become due and payable at the option of Seller. Interest on the delinquent payment from the due date thereof until paid shall be at a rate of two (2%) percent per month.

12. BUYER'S DEFAULT

Upon Buyer's default, Seller may dispose of the merchandise in any manner that it deems fit and, if it desires to resell same, may do so at private or public sale, with or without notice, and with or without the property being at the place of sale, subject, however, to applicable laws. Seller or its assigns shall have the right to bid at such sale and may become the purchaser of the property. The proceeds of the sale shall first be applied to the expenses incurred in retaking, repairing, storing and selling the goods; reasonable solicitor's fees included, and then shall be applied to the payment of the balance due under the contract. Any surplus amount shall be paid to Buyer. If a deficiency results after the sale, Buyer agrees to pay such forthwith, together with reasonable solicitor's fees, for the recovery of the goods incurred by Seller. If upon Buyer's default, Seller elects not to resell any goods which it may repossess, then the cost of repossession, including reasonable solicitor's fees, shall forthwith be due and payable from Buyer to Seller.

13. SECURITY INTEREST AND TITLE

In provinces which are governed by a Personal Property Security Act, this contract shall serve as a security agreement, reserving in Seller a security interest until full payment of the purchase price. The provisions of the Personal Property Security Act regarding security interest shall have preference and apply if inconsistent with other terms of the conditions of sale herein. In provinces where a Personal Property Security Act does not apply, title to the goods shall remain in the Seller or its assigns until full payment of the purchase price. Buyer agrees to execute forthwith any and all documents in such a way and form as Seller may need for filing or recording the security interest under a Personal Property Security Act with the proper registers or offices, or for filing or recording the Conditional Sales Contract herein.

14. SALES AND USE TAX

Seller's prices do not include sales, use, excise or other taxes payable to any governmental authority in respect of the sale of Seller's goods. Buyer shall pay, in addition to Seller's price, the amount of any such taxes or shall reimburse Seller for the amount thereof that Seller may be required to pay. At the option of Seller, Buyer shall give evidence of payment or of exemption certificate.

15. INSURANCE

Buyer shall keep the goods insured against damage by fire, water or other casualty as required by Seller, with a company acceptable to Seller, with loss payable to Seller for the total purchase price until Seller is fully paid. Seller, if it so elects, may place said insurance at Buyer's expense; Seller may cancel such insurance at any time and without notice and may receive the return premium, if any.

16. MODIFICATION BY SELLER

Any contract may be assigned or transferred by Seller, or the time for the making of any payment due by Buyer may be extended by Seller without derogation of any of the rights of Seller or its assigns. Waiver by any party of any default shall not be deemed a waiver of any subsequent default.

17. RETURNED GOODS

No goods will be accepted for return unless authorized in writing by Seller. In all cases, transportation and restocking charges will be borne by Buyer.

18. PACKING

Seller does not charge for standard packaging for domestic shipment. Buyer will be charged, however, for export packaging or other special packing desired. Cost for cartage to ship or transfer express will be added to the invoice. No credit will be allowed if no packing is required.

19. EXPORT ORDER

Export orders are to be accompanied by a confirmed irrevocable Letter of Credit in Seller's favor, in Canadian currency, with an accredited Canadian bank, subject to Seller's draft, with shipping documents attached.

20. CANCELLATION

Placing orders on hold or cancellation of orders require Seller's written approval, and are subject to cancellation and/or restocking charges.

21. BUYER'S RESPONSIBILITY AS TO MAINTENANCE

Buyer shall use and shall require its employees and agents to use all safety devices and guards and shall maintain the same in proper working order. Buyer shall use and require its employees and agents to use safe operating procedures in operating the equipment and shall further obey and have its employees and agents obey safety instructions given by Seller. If Buyer fails to meet the obligations herein, Buyer agrees to indemnify and save Seller harmless from any liability or obligation with regard to any personal injuries or property damages directly or indirectly connected with the operation of the equipment. Buyer further agrees to notify Seller promptly and in any event not later than ten (10) days after notice or knowledge of any accident or malfunction involving Seller's equipment which has caused personal injury or property damages and to cooperate fully with Seller in investigating and determining the causes of such accident and malfunction. In the event that Buyer fails to give such notice to Seller or to cooperate with Seller, Buyer shall be obligated to indemnify and save Seller harmless from any such claims arising from such accident.

22. MISCELLANOUS PROVISIONS

(A)If for any reason a provision of a contract is legally invalid, then in such event the rest of the contract shall remain in full force and affect, except that the parties shall try to replace such invalid provision with a provision closest to their original mutual intentions. (B) Any amendments to any contract or contracts require the consent in writing by both parties. Headings in this document are for ease of reference only.

23. NON ASSIGNMENT BY BUYER

Contract or contracts may not be assigned by Buyer without prior written consent of Seller.

24. APPLICABLE LAW

This agreement shall be governed by the laws of the Province of Ontario and the applicable laws of Canada. Buyer and Seller agree that any judicial proceeding with respect to this agreement must be brought and maintained in the City of Toronto, In the Province of Ontario.

25.

This instrument sets forth the entire understanding and agreement of the parties hereto in respect of the subject matter hereof, and all prior undertaking between the parties hereto, together with all representations and obligations of such parties in respect of such subject matter, shall be superseded by and merged into this instrument.

26.

The provisions of this agreement shall bind and ensure to the benefit of the parties hereto and their respective heirs, executors, administrators, successors and (subject to any restrictions or assignment herein above set forth) assigns, as the case may be.

27.

The parties acknowledge that they have requested this document and all notices or other documents relating thereto be drafted in the English language.

Les parties reconnaissent qu'ils ont requis que ce contrat et tous les avis ou autres documents qui s'y rapportent soient rédiges en langue anglaise.

"Terms and Conditions in French available upon request."

Send Quote Requests to info@automatedpt.com Call +1(800)985-6929 To Order or Order Online At Nordgearmotors.com

NORD GEAR CORPORATION

DRIVESYSTEMS — CONDITIONS OF SALE — WWW.NORD.COM

1. CONTRACT

Any contract between Nord Gear Corporation, hereinafter designated as Seller, and the Buyer is subject to the terms and conditions of sale hereinafter set forth. Any deviation from such terms and conditions must be specifically set forth in writing and consented to by Seller. Accordingly, the Buyer and Seller acknowledge and agree that the terms and conditions set forth below and on the face hereof shall govern Buyer's purchase of the goods described on the face hereof and shall take precedence over and represents the final agreement between Buyer and Seller, notwithstanding any inconsistent, contradictory or other prior or further conditions contained in any oral or written request or purchase order issued by Buyer or any other document furnished by Buyer in connection with its purchase of the Goods, regardless of whether such document or documents are exchanged simultaneously with this Invoice or prior or subsequent thereto. Any additional or different terms or conditions which may appear in any communicaiton, oral or written, from Seller, its officers, employees, agents or representatives, are hereby expressly rejected and shall not be effective or binding upon the Seller, unless specifically hereafter agreed to in writing by Seller and no such additional or different terms or conditions in any document submitted to Seller by Buyer shall become part of the contract between Buyer and Seller, unless such written acceptance by Seller specifically recognizes and assents to their inclusion. Any objection by Buyer to the terms and conditions hereof shall be ineffective unless Seller is advised in writing thereof within two (2) days of the date of this Invoice.

2. CONFIRMATION

An order shall be deemed accepted only when duly confirmed by Seller, at Nord Gear Corporation's home office in Waunakee, Wisconsin, and upon such confirmation the order shall become a contract binding upon the parties hereto, their successors and assigns.

3. PRICES

Prices shown are list prices and may be subject to applicable discounts. Unless otherwise agreed upon in writing, prices are FOB factory Waunakee, Wisconsin. Prices and discounts are subject to change without notice until order is accepted. Seller's prices do not include cost of any inspection permits required.

4. LIMITED WARRANTY

Seller hereby warrants that the goods sold hereunder shall be free from material defects in material and workmanship, if properly installed and used under normal operating conditions, for a period of twelve (12) months from the date of installation or eighteen (18) months from date of shipment, whichever comes first (the "Warranty Period"). With respect to gears and housings only, the Warranty Period is extended to thirty-six (36) months from the date of invoice or twenty-four (24) months from the date of installation, whichever comes first. The limited warranty shall not apply to any components or parts which are subject to normal operational wear and tear, including, but not limited to, belts and traction discs. Should any goods fail to comply with the foregoing limited warranty, Buyer shall provide written notice to Seller of the claimed defect and all relevant details within thirty (30) days of Buyer's discovery of the claimed defect. Buyer shall return the allegedly defective goods to Seller at its facilities in Waunakee, Wisconsin or to such other location within the USA as may be designated by Seller in its sole discretion, with all shipping and transportation charges prepaid by Buyer. Seller shall then examine the returned goods to determine if the claimed defect is covered by the limited warranty. If the claimed defect is covered by the limited warranty, Buyer's sole and exclusive remedy shall be to have Seller repair or replace, at Seller's option, the defective goods or components in accordance with the terms of this limited warranty. Seller shall have a commercially reasonable time to make such repairs or replacements and may use new or reconditioned components. Any repair or replacement shall not extend the Warranty Period unless otherwise agreed by Seller. Buyer shall pay all shipping costs and any costs of removal and re-installation of goods or components.

The foregoing limited warranty shall not apply with respect to any goods or components (i) which are not installed, used, operated, serviced or maintained in accordance with manufacturer's instructions or which are otherwise not properly installed, used, operated, serviced or maintained, or (ii) which are misused, neglected, damaged, altered, repaired, reconfigured or incorrectly wired. Seller makes no representations as to the specifications, capacity or performance of the goods sold hereunder, except as may be specifically set forth in the invoice's written specifications, and any such representations are expressly conditioned upon the accuracy and completeness of the data and information furnished by the buyer and upon the goods being properly installed, used, serviced and maintained by Buyer. Any description or model of the goods is for identification or illustrative purposes only and shall not be deemed to create any warranty, express or implied.

THE FOREGOING LIMITED WARRANTY SHALL EXTEND SOLELY TO BUYER AND NOT TO ANY OTHER PARTY. THE FOREGOING LIMITED WARRANTY IS IN LIEU OF ANY AND ALL OTHER WARRANTIES, WHETHER EXPRESS OR IMPLIED. SELLER HEREBY EXCLUDES AND DISCLAIMS ANY AND ALL OTHER WARRANTIES, WHETHER EXPRESS OR IMPLIED, INCLUDING, WITHOUT LIMITATION, ANY IMPLIED WARRANTIES OF MERCHANTABILITY OR FITNESS FOR A PARTICULAR PURPOSE. IF BUYER SHALL FAIL TO PAY WHEN DUE ANY PORTION OF THE PURCHASE PRICE OR ANY OTHER PAYMENT REQUIRED FROM BUYER TO SELLER UNDER THIS CONTRACT, ALL WARRANTIES AND REMEDIES SET FORTH HEREIN SHALL BE DEEMED NULL AND VOID, AB INITIO. THE PARTIES ACKNOWLEDGE AND AGREE THAT THE EXCLUSIVE REMEDY UNDER THE FOREGOING LIMITED WARRANTY SHALL NOT HAVE FAILED OF ITS ESSENTIAL PURPOSE (AS THAT TERM IS USED IN THE UNIFORM COMMERCIAL CODE) PROVIDED THAT SELLER REMAINS WILLING TO REPAIR OR REPLACE DEFECTIVE GOODS WITHIN A COMMERCIALLY REASONABLE TIME. BUYER SPECIFICALLY ACKNOWLEDGES AND AGREES THAT THE PRICE CHARGED BY SELLER FOR THE GOODS IS BASED UPON THE LIMITATIONS OF SELLER'S WARRANTY OBLIGATIONS AND OTHER LIABILITIES AS SET FORTH HEREIN.

LIMITATION OF LIABILITY. NOTWITHSTANDING ANY OTHER PROVISION HEREOF, IN NO EVENT SHALL SELLER BE LIABLE TO BUYER OR TO ANY OTHER PARTY FOR ANY INCIDENTAL, SPECIAL, INDIRECT OR CONSEQUENTIAL DAMAGES, LOST PROFITS, OR FOR ANY LOSSES, CLAIMS OR DAMAGES RELATING TO OR ARISING FROM THE USE OR OPERATION OF THE GOODS, AND IN NO EVENT SHALL ANY CLAIM OR RECOVERY OF ANY KIND EXCEED THE PURCHASE PRICE OF THE GOODS IDENTIFIED IN THE RELATED INVOICE.

5. SHORTAGE AND NONCONFORMITY

Any claim of shortage or that the goods do not conform with the specifications of the order or model must be made in writing within ten (10) days after delivery of the goods (as to which such claim is made) to Buyer or its nominees, but in no event shall the claim be later than within the time limit provided by the carrier or insurance company, otherwise such claim shall be deemed waived. Buyer may not return any goods claimed to be in non-conformity without Seller's prior written authorization. Goods returned without permission will not be accepted, including for credit, and will be returned to Buyer, F.O.B. Sellter's plant. Any claim based on the receipt of damaged Goods must be filed with the carrier which delivered the goods. The samples, measurements, dimensions and weights contained in the Seller's catalogs, sales manuals, photographs and drawings constitute only an approximate guide. The Seller reserves the right to make any change which the Seller, in its absolute discretion, considers necessary. While the goods will be delivered principally according to specifications or standards or quantities agreed upon, insignificant deviations or insignificant changes in construction are permissible. The same applies to partial deliveries, In the event that Buyer has a verified claim of shortage or nonconformity of the goods to the specifications of the order or the model, and if such claim has been submitted within the required time limit as set forth above, the Seller shall, at its own expense, make up for the shortage of the goods, or replace or repair the goods, as the case may be, but in no event shall Seller be or become liable to Buyer or to any other person or persons for any loss in damage, direct or indirect, arising out of or caused by such incidents or for the loss of profits, business or good will. The liability of the Seller to Buyer, if any hereunder, for breach of warranty, contract, negligence or otherwise, shall in no event exceed the amount of the purchase price of the goods sold with respect to which any damages are claimed. Shipping dates are estimates unless parties expressly agree on time of the essence.

6. FORCE MAJEURE

The obligation of the Seller shall be modified or excused, as the case may be, for reasons of Acts of God, war, governmental law regulations, strikes or lock-outs, fire, breakdown of machinery, whether in its own business enterprise, or if for any other cause beyond Seller's control, the goods cannot be delivered or their delivery becomes delayed in whole or in part. In the above instances time for delivery shall be extended for the period of the delay caused, with the proviso, however, that either party may cancel in writing the undelivered portion of the order or contract if the delay exceeds six (6) months from the delivery date originally confirmed by Seller. In no event shall Seller become liable in the aforesaid instances to Buyer or any third party for consequential damages or business loss.

7. SHIPMENT AS UNIT

Each shipment by Seller shall be treated as a separate and distinct unit with respect, but only with respect to forwarding, terms of payment, and the making of claims by the Buyer: provided, however, that if the Buyer defaults in the payment of any obligation to Seller or any installments thereof, under any agreement between Buyer and Seller, or if Buyer refuses to accept any goods when tendered for delivery, the Seller may, on fifteen (15) days written notice to the Buyer, without prejudice to Seller's other lawful remedies, either defer further performance until the defaulted payments are made in full, or make future deliveries for cash in advance only, or treat the entire contract or contracts with Buyer as breached by the Buyer and pursue its remedies for breach.

8. BUYER'S REFUSAL OF DELIVERY

If Buyer refuses to accept delivery of any goods tendered for delivery, then Seller, without prejudice to Seller's other lawful remedies, may either store or cause such goods to be stored in a warehouse, for buyer's account and at Buyer's cost, risk and expense, or sell such goods (without notice) to any purchases at public or private sale, and hold the Buyer liable for any difference between (a) the contract price of the goods, and (b) the price at which goods are resold less the costs and expense of such resale including brokerage commissions, or restocking charges.

9. GOODS IN TRANSIT

If prior to delivery or while the goods are in transit, Buyer or Seller becomes bankrupt or insolvent, or any petition in bankruptcy or for the reorganization or for a state court receivership is filed against Buyer or Seller, as the case may be, then the other party hereto may forthwith terminate this contract by giving written notice of such termination. Such termination shall not affect any claim for damages available to the Buyer, provided that if Buyer is then indebted to Seller, the amount of any such damage claim shall be abated to the extent that the indebtedness of Buyer to Seller, as actually paid in money, is abated by any order of judgement entered or any plan adopted in any bankruptcy, reorganization, receivership, or similar proceeding. Such termination shall not prejudice the Seller's rights to any amounts then due under the contract. If Buyer becomes bankrupt or insolvent or any petition in bankruptcy or for reorganizing or if a state court receivership is filed against Buyer, then, at its option Seller may take possession of any goods theretofore sold to Buyer, in connection with which the full purchase price has not been paid, analogous to the terns and provisions set forth in Paragraphs 11 and 12 hereinafter.

10. DELIVERY

(a) Any indicated dates of delivery are approximate only, but NORD Gear will attempt to meet them whenever possible. (b) NORD Gear will not be liable for any penalty clausess contained in any specifications or order submitted unless agreed to in writing by an authorized officer of NORD Gear Corporation. (c) Unless otherwise agreed, delivery of the goods to any carrier shall constitute delivery to the Buyer, and thereafter the risk of loss or damage to the goods shall be upon the Buyer. (d) If the Buyer does not give delivery instructions to the Seller at least (10) days prior to the delivery date ex factory confirmed by the Seller, the Seller may deliver the goods to a carrier of its own choosing, at Buyer's cost and risk, or, at Seller's option, may store the goods on the pier or any warehouse, at Buyer's cost and risk. Any purchase price in such event becomes due and payable within ten (10) days of such storage.

11. PAYMENT OF PURCHASE PRICE

Time of payment is of the essence under the contract. Unless otherwise provided, terms of payment are 30 days net from the date of invoice with a 1% discount if paid within 10 days of date of invoice. Upon default in any of the terms of the contract, or failure to comply with any of the conditions thereof, or upon seizure of the property under execution or other legal process, or if the Buyer becomes bankrupt or insolvent, or any petition for reorganization or for a state court receivership is filed against Buyer, or if the Buyer makes any assignment for the benefit of it's creditors or otherwise sells, encumbers or disposes of the goods, or if for any other reason the Seller should deem itself insecure, the full amount of the purchase price then remaining unpaid shall at once become due and payable at the option of the Seller.

12. BUYER'S DEFAULT

Upon the Buyer's default, the Seller may dispose of the merchandise in any manner that it deems fit and, if it desires to resell same, may do so at private or public sale, with or without notice, and with or without the property being at the place of sale, subject, however, to applicable laws. The Seller or its assigns shall have the right to bid at such sale and may become the purchaser of the property. The proceeds of the sale shall first be applied to the expenses incurred in retaking, repairing, storing and selling the goods, reasonable attorney's fees included, and then shall be applied to the payment of the balance due under the contract. Any surplus amount shall be paid to the Buyer. If a deficiency results after the resale, the Buyer agrees to pay such forthwith, together with reasonable attorney's fees, for the recovery of the goods incurred by the Seller. If upon the Buyer's default, the Seller elects not to resell any goods which it may repossess, then the cost of repossession, including reasonable attorney's fees, shall forthwith be due and payable from Buyer to Seller. Buyer agrees to pay all reasonable costs and reasonable attorneys' fees incurred by Seller in enforcing Seller's rights against Buyer, including Seller's right to payment of the purchase price of the goods and Buyer's payment of all other amounts owing to Seller required under this Invoice and Conditions of Sale.

13. SECURITY INTEREST AND TITLE

In states and localities which are governed by the Uniform Commercial Code, this contract shall serve as security agreement, reserving in Seller a security interest until full payment of purchase price. The provisions of the Uniform Commercial Code regarding security interest shall have preference and apply if inconsistent with other terms of the conditions of sale. In states and localities where the Uniform Commercial Code does not apply, title to the goods shall remain in the Seller or its assigns until full payment of the purchase price. Buyer agrees to execute forthwith any and all documents in such a way and form as Seller may need for filing or recording the security interest under the Uniform Commercial Code with the proper registers or offices, or for filing or recording the conditional sales contract.

14. SALES AND USE TAX

Buyer agrees to bear and pay any sales or use tax in connection with the purchase herein, and to hold the Seller harmless from payment. At the option the Seller, Buyer shall give evidence of payment or of exemption certificate.

15. INSURANCE

The Buyer shall keep the goods insured against damage by fire, water or other casualty as required by Seller, with a company acceptable to Seller, with loss payable to Seller for the total purchase price until the Seller is fully paid. Seller, if it so elects, may place said insurance at Buyer's expense; Seller may cancel such insurance at any time and without notice and may receive the return premium, if any.

16. MODIFICATION BY SELLER

Any contract may be assigned or transferred by the Seller, or the time for the making of any payment due by Buyer may be extended by Seller without derogation of any of the rights of the Seller or its assigns. Waiver by any party of any default shall not be deemed a waiver of any subsequent default.

17. RETURNED GOODS

No goods will be accepted for return unless authorized in writing by Seller. In all cases, transportation and restocking charges will be borne by Buyer.

18. PACKING

The Buyer will be charged for export packaging or other special packing desired. Cost for cartage to ship or transfer express will be added to the invoice. No credit will be allowed if no packing is required.

19. CHANGES/CANCELLATION

NORD Gear will not accept changes in specifications to a confirmed order unless such changes are requested in writing and confirmed back in writing. In addition, the purchaser must to agree to any additional charges that may arise from the change. Placing orders on hold or cancellation of orders require Seller's written approval, and are subject to cancellation and/or restocking charges.

20. BUYER'S RESPONSIBILITY AS TO MAINTENANCE

Buyer shall use and shall require its employees and agents to use all safety devices and guards and shall maintain the same in proper working order. Buyer shall use and require its employees and agents to use safe operation procedures in operating the equipment and shall further obey and have its employees and agents obey safety instructions given by Seller. If Buyer fails to meet the obligations herein, Buyer agrees to defend, indemnify and save Seller harmless from any liability or obligation with regard to any personal injuries or property damages directly or indirectly connected with the operation of the equipment. Buyer further agrees to notify Seller promptly and in any event not later than ten (10) days after notice or knowledge of any accident or malfunction involving Seller's equipment which has caused personal injury or property damages and to cooperate fully with Seller in investigating and determining the causes of such accident and malfunction. In the event that Buyer fails to give such notice to Seller or to cooperate with Seller, Buyer shall be obligated to defend, indemnify and save Seller harmless from any such claims arising from such accident.

21. MISCELLANEOUS PROVISIONS

(a) If for any reason a provision of a contract is legally invalid, then in such event the rest of the contract shall remain in full force and affect, except that the parties shall try to replace such invalid provision closest to their original mutual intentions. (b) This Invoice and these Conditions of Sale constitute the entire agreement between the parties regarding the subject matter hereof and supercedes all prior agreements, understandings and statements, whether oral or written, regarding such subject matter. No modification to, change in or departure from, the provisions of this Invoice and Conditions of Sale shall be valid or binding on Seller, unless approved in writing by Seller. No course of dealing or usage of trade shall be applicable unless expressly incorporated into this Invoice and Conditions of Sale. Any amendments to any contract or contracts between the parties shall be valid only upon the written consent of both parties.

22. NON ASSIGNMENT BY BUYER

Contract or contracts may not be assigned by the Buyer without prior written consent of the Seller.

23. APPLICABLE LAW AND VENUE

All contracts and their interpretation are governed by the applicable, substantive laws of the State of Wisconsin. Any litigation brought by the Buyer regarding this Invoice or goods purchased hereunder may only be brought in the Circuit Court for Dane County, Wisconsin.

NORD Gear Corporation
Toll Free in the United States: 888.314.6673

Send Quote Requests to info@automatedpt.com
Call +1(800)985-6929 To Order or Order Online At Nordgearmotors.com

Send Quote Requests to info@automatedpt.com
Call +1(800)985-6929 To Order or Order Online At Nordgearmotors.com

Notes

NOTES

Send Quote Requests to info@automatedpt.com
Call +1(800)985-6929 To Order or Order Online At Nordgearmotors.com

Send Quote Requests to info@automatedpt.com
Call +1(800)985-6929 To Order or Order Online At Nordgearmotors.com

Notes

NOTES

Send Quote Requests to info@automatedpt.com
Call +1(800)985-6929 To Order or Order Online At Nordgearmotors.com

Send Quote Requests to info@automatedpt.com Call +1(800)985-6929 To Order or Order Online At Nordgearmotors.com

Notes

NOTES

Send Quote Requests to info@automatedpt.com
Call +1(800)985-6929 To Order or Order Online At Nordgearmotors.com

Send Quote Requests to info@automatedpt.com
Call +1(800)985-6929 To Order or Order Online At Nordgearmotors.com

Notes

NOTES

Send Quote Requests to info@automatedpt.com
Call +1(800)985-6929 To Order or Order Online At Nordgearmotors.com

Send Quote Requests to info@automatedpt.com
Call +1(800)985-6929 To Order or Order Online At Nordgearmotors.com

Notes

NOTES

Send Quote Requests to info@automatedpt.com
Call +1(800)985-6929 To Order or Order Online At Nordgearmotors.com

Product Overview

UNICASE™ SPEED REDUCERS

HELICAL IN-LINE
- Foot or Flange Mount
- Torque up to 205,000 lb-in
- Gear ratios – 1.82:1 to over 300,000:1

NORDBLOC®.1 HELICAL IN-LINE
- Foot or Flange Mount
- Torque up to 26,550 lb-in
- Gear ratios – 1.88:1 to over 370:1

PARALLEL HELICAL CLINCHER™
- Shaft, Flange or Foot Mount
- Torque up to 797,000 lb-in
- Gear ratios – 4.26:1 to over 300,000:1

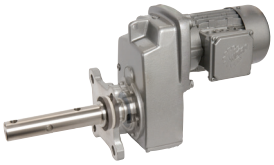

SCP SCREW CONVEYOR PACKAGE
- Shaft, or Flange Mount
- Torque up to 53,100 lb-in
- Gear ratios – 4.32:1 to over 1500:1

RIGHT ANGLE HELICAL-BEVEL 2-STAGE
- Foot, Flange or Shaft Mount
- Torque up to 5,840 lb-in
- Gear ratios – 4.1:1 to 70:1

RIGHT ANGLE HELICAL-BEVEL
- Foot, Flange or Shaft Mount
- Torque up to 283,000 lb-in
- Gear ratios – 8.04:1 to over 300,000:1

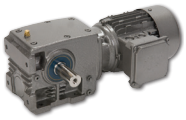

RIGHT ANGLE HELICAL-WORM
- Foot, Flange or Shaft Mount
- Torque up to 27,585 lb-in
- Gear ratios – 4.40:1 to over 300,000:1

HIGH PERFORMANCE MOTORS & BRAKEMOTORS

INVERTER/VECTOR DUTY
- Standard or Energy Efficient
- Integral, NEMA or Metric IEC
- 1/6 to 250 hp

UNICASE™ SPEED REDUCERS

MINICASE™ RIGHT ANGLE WORM
- Foot, Flange or Shaft Mount
- Torque up to 3,540 lb-in
- Gear ratios – 5:1 to 500:1

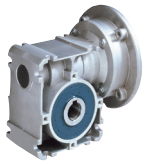

FLEXBLOC™ WORM
- Modular bolt-on options
- Torque up to 4,683 lb-in
- Gear ratios – 5:1 to 3,000:1

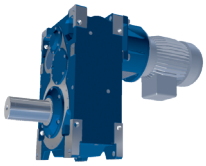

MAXXDRIVE™ LARGE INDUSTRIAL GEAR UNITS PARALLEL HELICAL
- Modular bolt-on options
- Torque up to 2,027,000 lb-in
- Gear ratios – 5:1 to 1,600:1

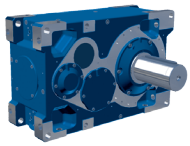

MAXXDRIVE™ LARGE INDUSTRIAL GEAR UNITS HELICAL-BEVEL
- Modular bolt-on options
- Torque up to 2,027,000 lb-in
- Gear ratios – 5:1 to 1,600:1

NORDAC AC VECTOR DRIVES

SK200E FAMILY
- Distributed, high performance
- 380-480V, 3-phase to 30 hp
- 200-240V, 3-phase to 15 hp
- 200-240V, 1-phase to 1.5 hp
- 100-120V, 1-phase to 1 hp

SK500E FAMILY
- Compact, cabinet mount, high performance
- 380-480V, 3-phase, to 50hp
- 200-240V, 3-phase, to 25hp
- 200-240V, 1-phase, to 3hp
- 100-120V, 1-phase, to 1.5hp

Send Quote Requests to info@automatedpt.com
Call +1(800)985-6929 To Order or Order Online At Nordgearmotors.com

DRIVESYSTEMS

www.nord.com

NORD Gear Corporation
MEMBER OF THE NORD DRIVESYSTEMS GROUP
National Customer Service Toll-Free: 888.314.6673
info.us@nord.com

NORD Gear Limited
MEMBER OF THE NORD DRIVESYSTEMS GROUP
Toll-Free in Canada: 800.668.4378
info.ca@nord.com

WEST
Corona, CA (Los Angeles)
Phone: 951.393.6565

MIDWEST
Waunakee, WI (Madison)
Phone: 608.849.7300

EAST
Charlotte, NC
Phone: 980.215.7575

CANADA
Brampton, ON (Toronto)
Phone: 905.796.3606

106001500/2719

Send Quote Requests to info@automatedpt.com
Call +1(800)985-6929 To Order or Order Online At Nordgearmotors.com